REVISIONS

SYMBOL	DESCRIPTION	DATE	APPROVAL
—	Released	11/20/03	TJP

SHEET REVISION STATUS

SH	1	2	3	4	5	6	7	8	9	10	11	12	13	14	15	16	17	18	19	20
REV	-	-	-	-																
SH	21	22	23	24	25	26	27	28	29	30	31	32	33	34	35	36	37	38	39	40
REV																				

ORIGINATOR: T. Perry/QSS Group Inc. Thomas J Perry	**DATE** 11/19/03	**FSC: 5930**
APPROVED: Thomas J Perry	11/19/03	Switch, Thermostatic, Bimetallic, SPST, Narrow Differential, Hermetic, Detail Specification for
CODE 562 APPROVAL: Kusum K. Sahu	11.19.03	
CODE 562 SUPERVISORY APPROVAL: Darryl R. Lakins	11.20.03	
ADDITIONAL APPROVAL:		**S-311-641/02**

NATIONAL AERONAUTICS AND SPACE ADMINISTRATION
GODDARD SPACE FLIGHT CENTER
GREENBELT, MARYLAND 20771

CAGE CODE: 25306

GSFC DETAIL SPECIFICATION

SWITCH, THERMOSTATIC, BIMETALLIC, SINGLE POLE, SINGLE THROW (SPST), NARROW DIFFERENTIAL, HERMETICALLY SEALED

The requirements for procuring the thermostatic switches described herein shall consist of this specification and the current revision of GSFC S-311-641.

PART NUMBER

G311P641/02	1	1	L	163	03	05	2	1
(A)	(B)	(C)	(D)	(E)	(F)	(G)	(H)	(I)

(A) GSFC PREFIX

(B) BRACKET
- 1 = No Bracket
- 2 = Loose Bracket

(C) Terminal
- 1 = Straight
- 2 = 45°
- 3 = Right Angle

(D) Operation
- L = Open on rise
- F = Close on rise

(E) Closing Temperature*
Use 3 digits (°F)

(F) Tolerance*
- 03 = ±3
- 04 = ±4
- 05 = ±5

(G) Differential*
- 04 = 2 to 4°F
- 05 = 2 to 5°F
- 07 = 3 to 7°F

(H) Plating
- 2 = Copper-nickel**
- 6 = Copper
- 7 = Gold

(I) Contacts
- 1 = Silver
- 2 = Gold plated

* See Table 1 for standard operating temperatures, differential and tolerances which can also be customized by the manufacturer. For custom parts, the manufacturer shall modify either (E), (F), or (G) of the part number, as applicable.

** Standard finish.

REQUIREMENTS

Dimensions and configuration: see Figures 1 - 4.

Switching action: Single Pole, Single Throw (SPST)

Storage temperature range: -65°F to +400°F (-53.9°C to +204.4°C)
Operating temperature range: 0°F to +300°F (-17.8°C to +148.9°C)

Contact rating: resistive load, 2.0 amperes at 30VDC/120VAC, 250,000 cycles

Contact resistance: 0.050 ohms maximum, per MIL-STD-202, Method 307

DWV: 1250 VAC, rms, 60 cycles for 1 minute, terminal to case, per MIL-STD-202, Method 301

Vibration: 10-2000 Hz, 10G, per MIL-STD-202, Method 204, Condition D (monitored)

Shock: 100G, 6 milliseconds, per MIL-STD-202, Method 213

Hermeticity: 1 X 10-8 atm cc/sec. maximum, per MIL-STD-202, Method 112, Condition C

Weight: 5.4 grams (average)

Table 1 Standard operating characteristics, differential and tolerances.

Closing Temperature Range	Opening Temperature Differential	Closing Temperature Tolerance
0 to +250°F (-17 to 121°C)	2 to 5°F (1.1 to 2.8°C)	±4°F (±2.2°C)
251 to +300°F (122 to +149°C)	3 to 7°F (1.7 to 3.9°C)	±5°F (±2.8°C)

Operating temperature: Temperature at which contacts close.

Differential: Subtract (for close on rise) or add (for open on rise) the differential from the closing temperature to determine the temperature at which the contacts will open.

Qualification: Qualification listing to MIL-PRF-24236/20 required.

Screening: Switches shall be subjected to 100% Group A screening inspection per S-311-P-641, Table 1, Test Nos. 1 - 12, with the following exception: PIND per manufacturer's GSFC approved internal test procedure.

Approved source(s):

Manufacturer	Cage Code	Vendor Similar Part Number
Control Products of Texas Instruments	82647	M2 Series

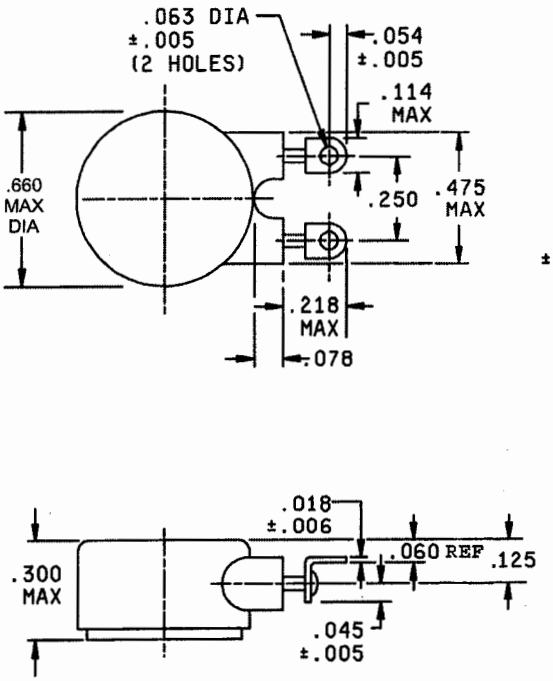

Figure 1
(G311P641/0211XXXXXXXXXXX)

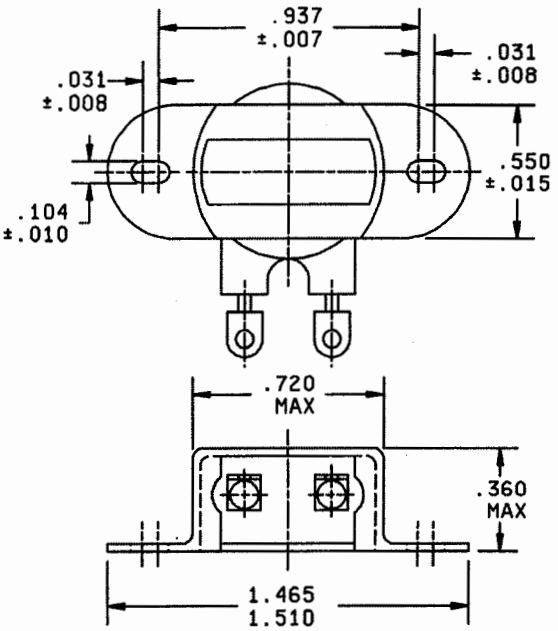

Figure 2
(G311P641/0221XXXXXXXXXXX)

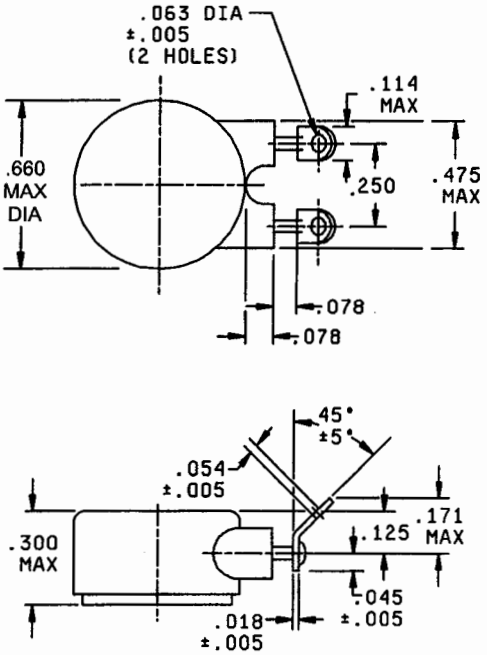

Figure 3
(G311P641/0212XXXXXXXXXXX)

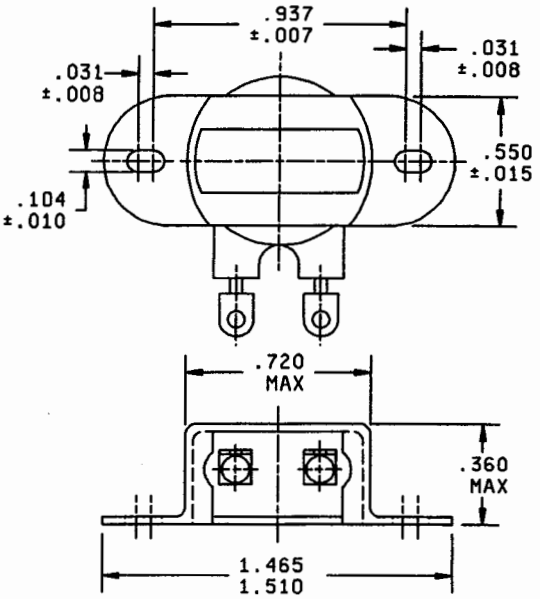

Figure 4
(G311P641/0222XXXXXXXXXXX)