REVISIONS			
SYMBOL	DESCRIPTION	DATE	APPROVAL
—	RELEASED	7/21/92	S.C.J.

SHEET REVISION STATUS																				
SH	1	2	3	4	5	6	7	8	9	10	11	12	13	14	15	16	17	18	19	20
REV	--	--	--																	
SH	21	22	23	24	25	26	27	28	29	30	31	32	33	34	35	36	37	38	39	40
REV																				

ORIGINATOR T. D. Perry T. Perry/Paramax	DATE 6/23/92	FSC: 5945
APPROVED S. Archer-Davies S. Archer-Davies/Paramax	6/23/92	Relays, Electromagnetic, Hermetically Sealed, 2PDT (2C), Low Level to 1 Ampere (TO-5 Enclosure)
CODE 311 APPROVAL P. Jones/GSFC	6/30/92	
CODE 311 SUPERVISORY APVL G. P. Kramer, Jr./GSFC	7/20/92	
ADDITIONAL APPROVAL		S-311-P-754/03

NATIONAL AERONAUTICS AND SPACE ADMINISTRATION
GODDARD SPACE FLIGHT CENTER
GREENBELT, MARYLAND 20771

CAGE CODE: 25306

GSFC DETAIL SPECIFICATION

RELAYS, ELECTROMAGNETIC, HERMETICALLY SEALED, 2PDT (2C), LOW LEVEL TO 1 AMPERE (TO-5 ENCLOSURE)

The requirements for procuring the relays described herein shall consist of this specification and the current revision of GSFC S-311-P-754.

Table I. Part Numbers and characteristics

GSFC Part Number	Similar to MIL Part Number	Terminal Type	Coil Voltage (Nominal)	Pickup Voltage (max.)	Dropout Voltage (min.)	DC Coil Resistance (ohms)
G311P754/03-001	M39016/9-014	Wire Leads	6.0 Vdc	3.5 Vdc	0.28 Vdc	98 ± 10%
G311P754/03-002	M39016/9-015	Wire Leads	9.0 Vdc	5.3 Vdc	0.54 Vdc	220 ± 10%
G311P754/03-003	M39016/9-016	Wire Leads	12.0 Vdc	7.0 Vdc	0.63 Vdc	390 ± 10%
G311P754/03-004	M39016/9-017	Wire Leads	18.0 Vdc	10.5 Vdc	0.91 Vdc	880 ± 10%
G311P754/03-005	M39016/9-018	Wire Leads	26.5 Vdc	14.2 Vdc	1.37 Vdc	1560 ± 10%

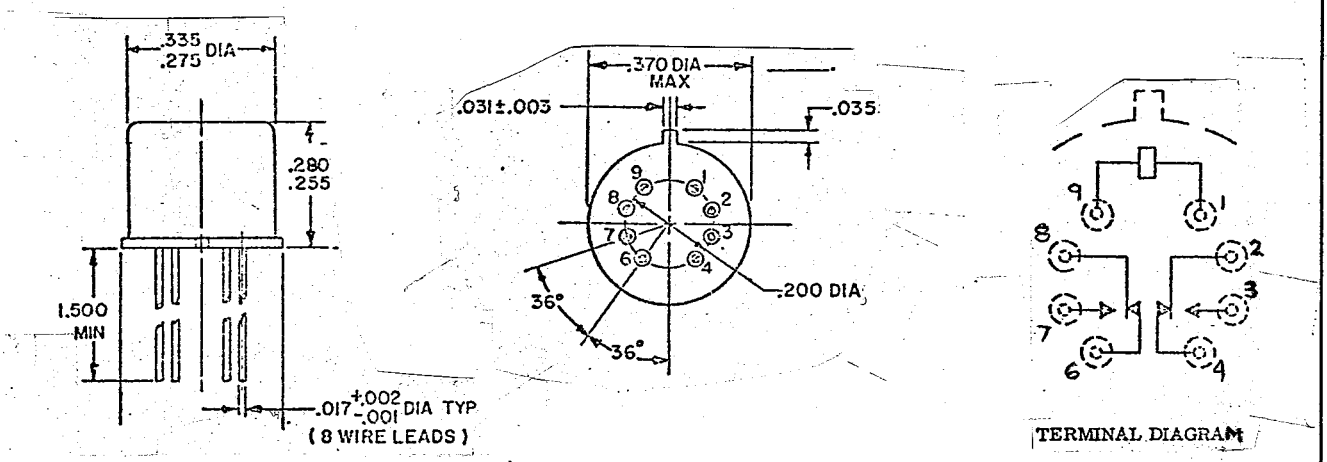

Figure 1. Configuration and circuit diagram.

Notes:

1. Relays must be provided with unpainted enclosures.
2. Terminal numbers in circuit diagram are for reference only

REQUIREMENTS:

Operating Temperature Range: -65°C to +125°C

Other: All requirements (contact ratings, life test requirements, environmental data, etc.) shall be as specified in MIL-R-39016/9 except as detailed or modified herein.

Seal
- Fine leak test ..... 1×10^{-8} cc/sec max.
- Gross leak test ..... not applicable

Electrical measurements
- Insulation resistance ..... 5,000 Mohm min. @ 100 Vdc
- Dielectric strength ..... 500 V_{rms}, 60 Hz
- Coil resistance ..... see Table I
- Pickup voltage ..... see Table I
- Dropout voltage ..... see Table I
- Contact resistance ..... 100 milliohms max.
- Operate time ..... 2 ms max.
- Release time ..... 1.5 ms max.
- Bounce time ..... 2 ms max.
- Coil transient suppression ..... not applicable
- Neutral screen ..... not applicable

Vibration
- Sinusoidal ..... 30 g (55 - 3000 Hz)
- Random ..... not applicable

High temperature soak ..... applicable
High temperature run-in ..... not applicable
Low temperature run-in ..... applicable
Room temperature run-in ..... applicable

Seal
- Fine leak test ..... 1×10^{-8} cc/sec max.
- Gross leak test ..... applicable