C01-11

Integral and Integrated Passives Webbook Update - Part 1

B. Etienne, D. Becker, and P. Sandborn

Objective: *Complete an updated review of state-of-the-art integral and integrated passive technologies. Compare size, cost, and performance for systems constructed with and without integral or integrated passive components (resistors and capacitors). Develop guidelines for determining when and how it makes sense to include integral and/or integrated passives within a system (i.e., what system characteristics, if any, indicate the opportunity for cost savings through the use of integral or integrated passives).*

Definitions

- **Discrete** – individual surface mount or through-hole components that are assembled to substrates
- **Integrated** (networks, arrays) – multiple passives fabricated in a single integrate circuit that does not contain active devices. Three integrated configurations are common:
  - *Isolated* (single row termination) – all passives are electrically isolated from each other
  - *Bussed* – all passives share a single common electrical connection
  - *Dual Termination* – each connection is terminated through two networked passives to two different lines.

  (Integrated passive components need not be confined to a single type of device, e.g., RC networks)
- **On-Chip** – passives fabricated within an active integrated circuit
- **Integral** (buried, <u>embedded</u>) – passives fabricated on one or more layers within a substrate.

Definitions
(Embedded Resistors and Capacitors)

Embedded resistors:

- Dedicated resistor layer (often two for symmetry) – Ohmega-Ply® approach
- Screening print a resistive material directly onto a wiring layer only where an embedded resistor is required

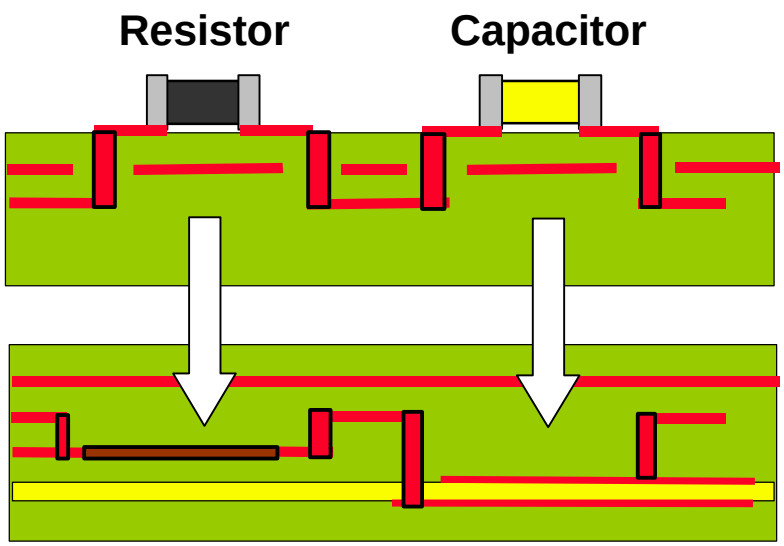

Embedded Capacitors:

- Bypass capacitors are embedded by dielectric substitution into an existing reference plane layer (as opposed to layer pair addition).
- Singulated embedded capacitors are fabricated via dedicated layer pair addition.

Potential Advantages of Embedded Passives

- Increased circuit density through saving real-estate on the substrate
- Improved electrical properties through additional termination and filtering opportunities and shortening electrical connections
- Cost reduction through decrease in board assembly operations
- Increased product quality through the elimination of incorrectly attached devices
- Improved reliability through eliminating solder joints

Embedded Passive Tradeoffs

- Board area decreases due to reduction in the in the number of discrete passive components
- Decreased wiring requirements due to the integration of resistors and bypass capacitors into the board
- Increased wiring density requirements due to the decreased size of the board
- Increased number of boards fabricated on a panel due to decreased board size
- Increased board cost per unit area
- Increased board fabrication waste
- Decreased board yield
- Decreased board fabrication throughput
- Decreased assembly cost
- Decreased overall assembly yield
- Decreased assembly level rework

DO EMBEDDED PASSIVES REDUCE SYSTEM COSTS?

… not a simple tradeoff

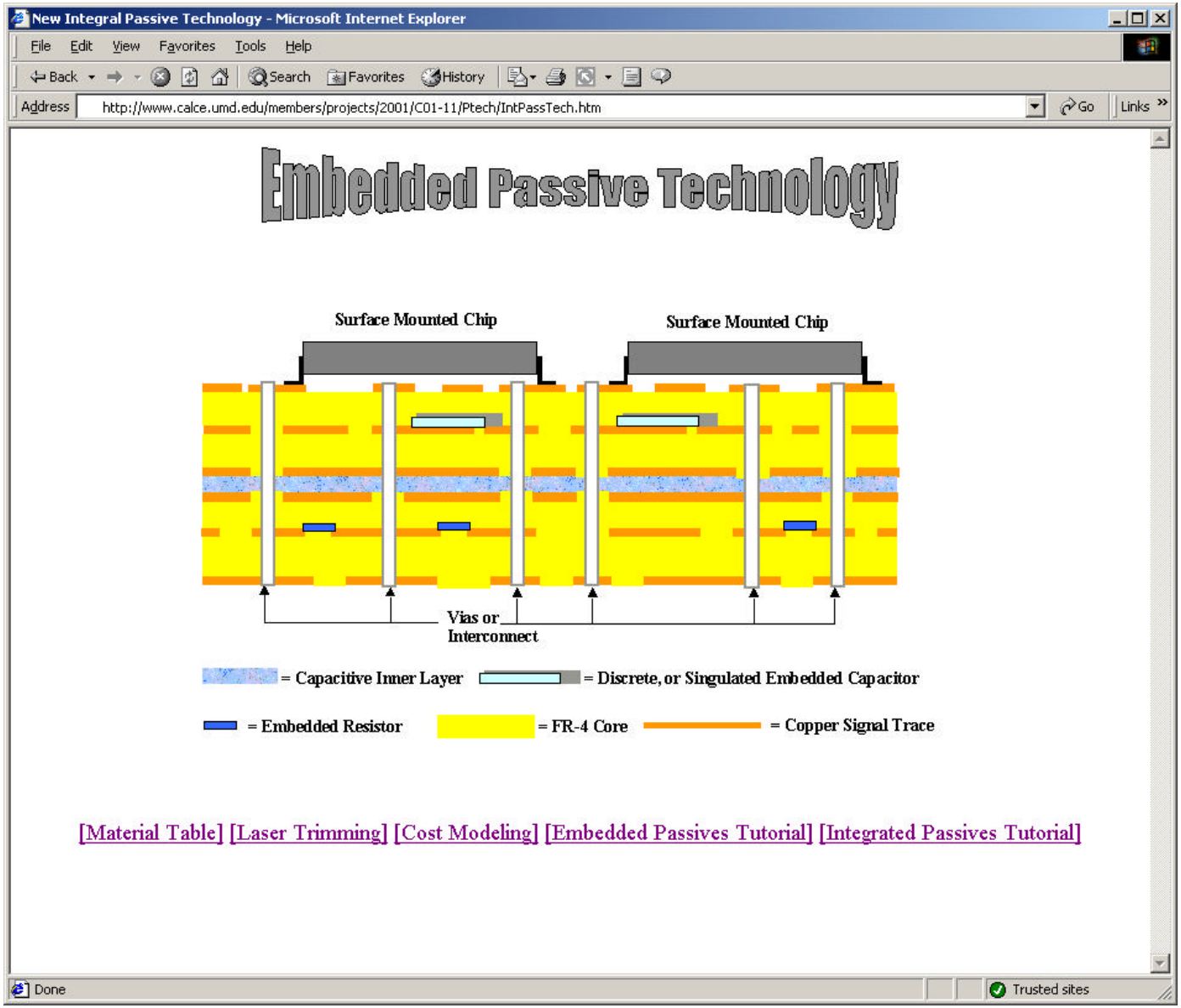

http://www.calce.umd.edu/members/projects/2001/C01-11/Ptech/IntPassTech.htm

Embedded Passive Materials

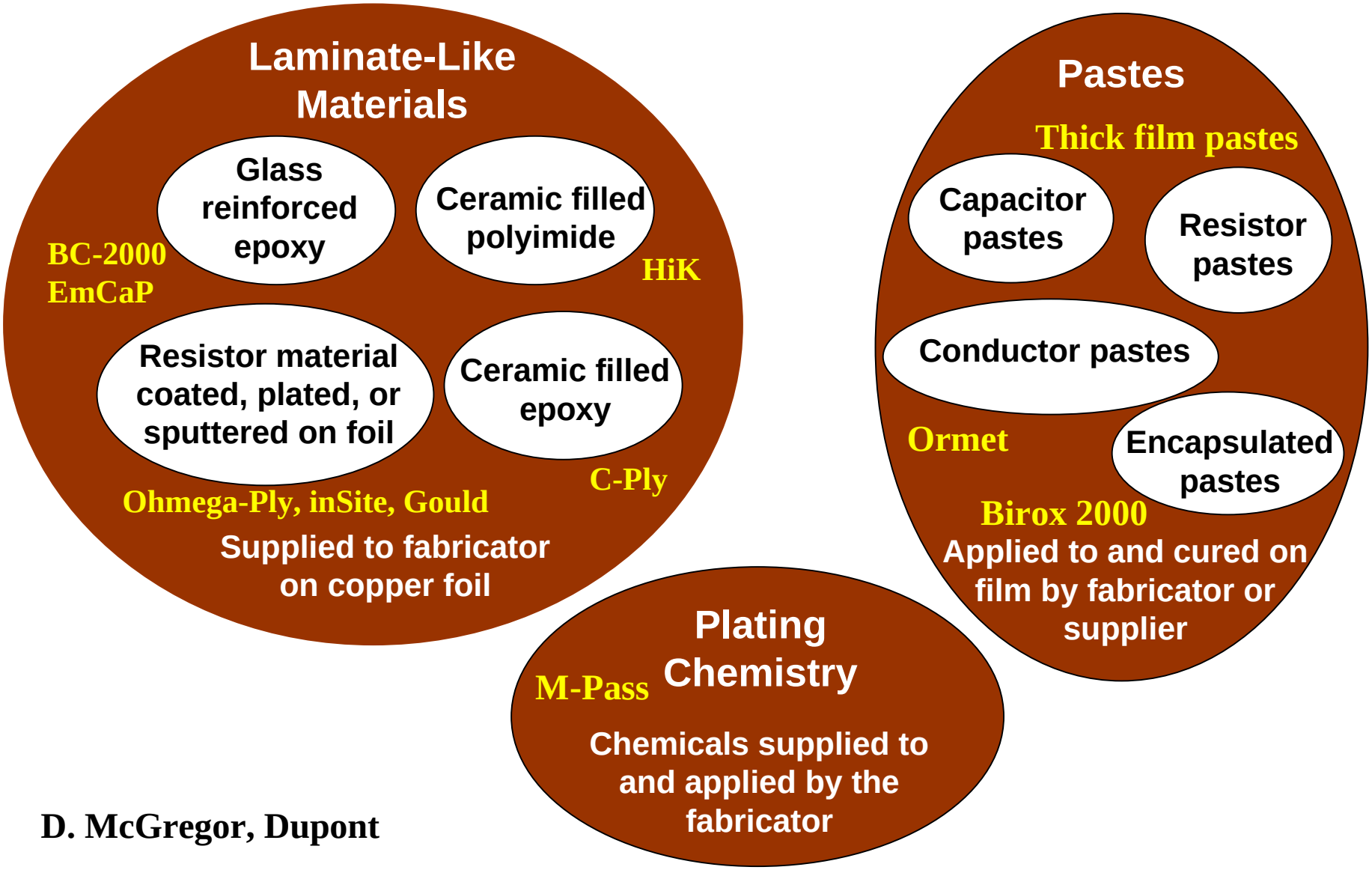

D. McGregor, Dupont

Summary of Currently Available Embedded Passive Materials - Microsoft Internet Explorer

File Edit View Favorites Tools Help

Back Search Favorites History

Address http://www.calce.umd.edu/members/projects/2001/C01-11/Ptech/EmbPasMaterials.htm Go Links

Summary of Currently Available Embedded Passive Materials/Technologies

Dielectric (and associated) Materials for Embedded Capacitor Fabrication

Material Source	Material Type		Material Composition	Material Thickness (microns)	Capacitance (pF/square inch)	Description of Material as Supplied to Board Fabricator	Description of Material in Finished Board	Availability
Polyclad, Nelco (BC - 2000)	Capacitor dielectric	Organic	Glass reinforced epoxy	25-50	400- 550	Laminate with copper on both sides of a core	Copper power and ground planes with glass/epoxy core	Commercially supported
3M (C - Ply)	Capacitor dielectric	Organic	Barium titanate filled epoxy	4 - 25	5,000 - 30,000	Laminate with copper on both sides of core	Copper power and ground planes with epoxy core	Commercially supported
Dupont (HiK)	Capacitor dielectric	Organic	Barium titanate filed polyimide	8 - 25	~ 3000	Laminate wi on both side		
Dupont / Goulds (Goulds Adhesiveless laminates)	Capacitor dielectric	Organic	Unfilled polyimide	12 - 25		Laminate wi on both side		
Shipley (inSite)	Copper dielectric	Inorganic	Thin film silicon dioxide	< 2	65,000 -130,000 190,000	Laminate wi on both side		
Dupont (F1)	Copper dielectric	Inorganic	Sintered barium titanate ceramic	10 - 25	120000 - 150000	Paste. Or, a with the sing capacitors fi copper foil in pre-determined locations and laminated, capacitor side in, to single sided FR-4 laminate.	electrode. The capacitors are encapsulated by the FR-4 laminated to the original copper foil. Fabricator imaging, drilling and plating provide connection to the two electrodes of the capacitor.	Prototype
Dupont (F2)	Conductor	Inorganic	Silver or copper conductor paste to form second electrode of F1 singulated capacitors	10 - 25	120000 - 150000	Paste. Or part of the laminate described in F1.	Functions as the second electrode for the singulated capacitors	

Includes all materials on the UL radar scope:

- **Materials with UL approval**
- **Materials seeking UL approval**
- **Materials expected to seek UL approval**

Done Trusted sites

Summary of Currently Available Embedded Passive Materials - Microsoft Internet Explorer

File Edit View Favorites Tools Help

Address http://www.calce.umd.edu/members/projects/2001/C01-11/Ptech/EmbPasMaterials.htm

Ohmega Technologies Inc. (Ohmega ply®)	Resistor	Inorganic	Nickel/ phosphorous	Less than 1 micron. Thickness adjusted t obtain desired sheet resistivity				
DuPont (K1)	Resistor	Inorganic	Lanthanum boride ceramic	10 - 15				
DuPont (K2)	Resistor	Organic	Resistor encapsulant paste. Ceramic filled epoxy	10 - 15				
MacDermid (M-Pass™)	Resistor	Inorganic	Nickel/ Phosphorous	0.1				
Shipley (inSite™)	Resistor	Inorganic	Platinum alloy	< 0.2	1000	copper foil, or laminated, alloy side in, to single sided core.	under all copper that remains on the board and is removed from all areas of the board that have no	Prototype

Done

Trusted sites

http://www.dupont.com/mcm/pdfs/2000sers.pdf - Microsoft Internet Explorer

File Edit View Favorites Tools Help

Address http://www.dupont.com/mcm/pdfs/2000sers.pdf

Technical Information

DuPont Electronic Materials

Ceramic Circuit Materials and Technologies

Birox 2000 Series Resistors

10Ω/□ – 1MΩ/□ Resistor Compositions

Description

2000 Series resistors have been developed for hybrid microcircuit applications to provide significant improvements over current resistor technology. Traditionally hybrid thick film resistor systems have been designed to give specified electrical performance when fired at a peak temperature of 850°C for 30 minutes. Variability in firing conditions, resistor length and termination metallurgy can cause shifts in resistivity and TCR. Using complicated new concepts in chemistry and materials processing, it has been possible to achieve excellent electrical properties as well as broad processing latitude. 2000 Series resistors will also provide a broader range of design options due to the improved TCR tracking capability between resistors of different size and value.

Features

- Tight TCR control
- Low noise
- Low sensitivity to firing temperature and time
- Compatible with Ag and Ag/Pd termination metallurgies
- Small length and thickness effects on resistivity and TCR
- Small shifts of resistivity and TCR on re-firing
- Thinner printing (20 µm dried thickness)

Recommended Processing

Printing

Series 2000 Resistor Compositions should be thoroughly mixed before use. This is best achieved by slow, gentle, hand stirring with a clean burr-free spatula (flexible plastic or stainless steel) for 1–2 minutes. Care must be taken to avoid air entrapment. Printing should be carried out in a clean and well ventilated area.

Note: Optimum printing characteristics are generally achieved in the temperature range of 20°C–23°C. It is therefore important that material in its container is at this temperature prior to commencement of printing.

Specified properties are based on resistors printed to 20 ± 2 µm dried print thickness. This is generally achieved using a 325-mesh stainless steel screen with 10–15 µm emulsion thickness. Print speeds of 10 to 20 cm/s may be used. Control and reproducibility of print thickness is essential to obtain predictable, reproducible fired resistor properties.

Drying

Allow prints to level for 5–10 minutes at room temperature in a clean, draft-free environment, followed by drying for 10–15 minutes at 150°C in a well ventilated oven or conveyor dryer.

1 of 17 8.5 x 11 in

Done

Internet