DETAIL SPECIFICATION
SWITCHES, PRESSURE, (ABSOLUTE, GAGE, AND DIFFERENTIAL),
GENERAL SPECIFICATION FOR
This specification is approved for use by all Departments and Agencies of the Department of Defense.

1. SCOPE

1.1 Scope. This specification covers the general requirements for absolute, gage, and differential pressure switches (see 6.1).

1.2 Classification.

1.2.1 Type. The type will be identified in accordance with table I.

TABLE I. Type

Type	Switch
I	Absolute pressure
II	Gage pressure
III	Differential pressure

1.2.2 Temperature.

1.2.2.1 High temperature. The high temperature will be in accordance with table II.

TABLE II. High temperature

Symbol	Temperature operating and nonoperating	
	°F	°C
B	275	135
C	350	176.6
D	400	204.4
E	500	260
F	600	315.5

Beneficial comments (recommendations, additions, deletions) and any pertinent data which may be of use in improving this document should be addressed to: Defense Supply Center, Columbus, ATTN: DSCC/VAC, Post office Box 3990, Columbus, OH 43216-5000), by using the Standardization Document Improvement Proposal (DD form 1426) appearing at the end of this document or by letter.

DISTRIBUTION STATEMENT A. Approved for public release; distribution is unlimited.

USA Information Systems, Inc.
(757)491-7525 / (800)872-8830
www.usainfo.com

1.2.2.2 Low temperature. The low temperature will be in accordance with table III.

TABLE III. Low temperature.

Symbol	Temperature operating and nonoperating	
	°F	°C
D	-65	-53.9
E	-85	-65
F	-100	-73.4

1.2.3 Altitude. The altitude will be in accordance with table IV.

TABLE IV. Altitude.

Symbol	Altitude feet	Pressure equivalent psia (lb_f / in^2a)
	°F	°C
A	10,000	10.1
B	20,000	6.8
C	70,000	0.7
D	100,000	0.16
E	150,000	0.021

1.2.4 Shock. The shock will be in accordance with table V.

TABLE V. Shock.

Symbol	Shock Gs
A	50
B	75
C	100
D	500
E	High impact

1.2.5 Vibration characteristic. The vibration will be in accordance with table VI.

TABLE VI. Vibration.

Symbol	Type
S	Sine
R	Random

1.2.6 Life.

1.2.6.1 Mechanical life. The mechanical life will be in accordance with table VII.

TABLE VII. Mechanical life.

Symbol	Cycles
A	100,000
B	200,000
E	20,000
F	50,000

1.2.6.2 Electrical life. The electrical life will be in accordance with table VIII.

TABLE VIII. Electrical life.

Symbol	Cycles
A	10,000
B	25,000
C	50,000
D	100,000

1.2.6.7 Acceleration. The acceleration will be in accordance with table IX.

TABLE XI. Acceleration.

Symbol	Gs
A	2
B	4
C	8
D	12
E	16

1.2.8 Pressure pulsation.

1.2.8.1 Pressure pulsation amplitude. The pressure pulsation amplitude will be in accordance with table X in determining the actuation and deactuation points.

TABLE X. Pressure pulsation amplitude.

Grade	Percent steady state pressure
A	0
B	2
C	5
D	8
E	10

1.2.8.2 Pressure pulsation frequency. The pressure pulsation frequency will be in accordance with table XI.

TABLE XI. Pressure pulsation frequency.

Grade	Frequency in Hz
A	0
B	60 ± 5
C	200 ± 20
D	500 ± 50
E	700 ± 50

KSR INFORMATION SYSTEMS

1.2.9 Pressure rise. The pressure rise will be in accordance with table XII.

TABLE XII. Pressure rise.

Grade	Pressure rise rate in psi (lb_f / in^2) per second
A	less than 100
B	more than 1000
C	50,000
D	100,000
E	250,000
F	500,000
G	1,000,000
H	1,500,000
I	2,000,000
J	2,500,000

2. APPLICABLE DOCUMENTS

2.1 General. The documents listed in this section are specified in sections 3 and 4 of this specification. This section does not include documents cited in other sections of this specification or recommended for additional information or as examples. While every effort has been made to ensure the completeness of this list, document users are cautioned that they must meet all specified requirements documents cited in sections 3 and 4 of this specification, whether or not they are listed.

2.2 Government documents.

2.2.1 Specifications, standards, and handbooks. The following specifications, standards, and handbooks form a part of this document to the extent specified herein. Unless otherwise specified, the issues of these documents are those listed in the issue of the Department of Defense Index of Specifications and Standards (DoDISS) and supplement thereto, cited in the solicitation (see 6.2).

SPECIFICATIONS

DEPARTMENT OF DEFENSE

MIL-W-5086 - Wire, Electric, Polyvinyl Chloride Insulated, Copper or Copper Alloy.
MIL-P-5315 - Packing, Preformed, Hydrocarbon, Fuel Resistant.
MIL-C-5541 - Chemical Conversion Coatings on Aluminum and Aluminum Alloy.
MIL-R-5757/10 - Relays, Electromagnetic, Hermetically Sealed, DPDT, Low Level, and 2 Amperes.
MIL-A-8625 - Anodic Coatings, For Aluminum and Aluminum Alloys.
MIL-S-8879 - Screw Threads, Controlled Radius Root With Increased Minor Diameter.
MIL-I-16923 - Insulating Compound, Electrical, Embedding Epoxy.
MIL-P-25732 - Packing, Preformed, Petroleum Hydraulic Fluid Resistant, Limited Service at 275°F (135°C).
MIL-R-25988 - Rubber, Fluorosilicone Elastomer, Oil-and-Fuel Resistant, Sheets, Strips, Molded Parts, and Extruded Shapes (O-rings, Class 1, Grade 70).
MIL-S-28786 - Switches, Electrical and Fiber Optic, Packaging of.
MIL-R-83248/1 - Rubber, Fluorocarbon Elastomer, High Temperature, Fluid, and Compression Set Resistant (O-rings, Class 1, 75 Hardness).

(See Supplement 1 for list of associated specification sheets.)

STANDARDS

FEDERAL

FED-STD-H28 - Screw-Thread Standards for Federal Services.

DEPARTMENT OF DEFENSE

MIL-STD-202 - Test Methods for Electronic and Electrical Component Parts.
MIL-STD-810 - Environmental Engineering Considerations for Laboratory Tests.
MIL-STD-1285 - Marking of Electrical and Electronic Parts.

(Unless otherwise indicated, copies of the above specifications, standards and handbooks are available from the Document Automation and Production Service, Building 4/D (DPM-DoDSSP), 700 Robbins Avenue, Philadelphia, PA 19111-5094.)

2.3 Non-Government publications. The following document forms a part of this document to the extent specified herein. Unless otherwise specified, the issues of the documents that are DoD adopted are those listed in the issue of the DoDISS cited in the solicitation. Unless otherwise specified, the issues of documents not listed in the DoDISS are the issues of the documents cited in the solicitation (see 6.2).

AMERICAN NATIONAL STANDARDS INSTITUTE (ANSI)

ANSI/NCSL Z540-1 - Calibration Laboratories and Measuring and Test Equipment, General Requirements for.

INTERNATIONAL ORGINZATIOINS FOR STANDARDS (ISO)

ISO 10012-1 - Quality Assurance Requirements for Measuring Equipment - Part 1: Metrological Confirmation System for Measuring Equipment.

(Application for copies should be addressed to the American National Standards Institute (ANSI), 11 West 42nd Street, New York, NY 10036-8002.)

AMERICAN SOCIETY FOR TESTING AND MATERIALS (ASTM)

ASTM-D635 - Standard Test Method for Rate of Burning and/or Extent and Time of Burning of Plastics in a Horizontal Position.

ASTM-D5948 - Compounds, Molding, Thermosetting.

ASTM-D4066-82 - Nylon Injection and Extrusion Materials (PA).

(Application for copies should be addressed to the American Society for Testing and Materials, 100 Barr Harbor Drive, West Conshohocken, Pennsylvania, 19428-2959.)

IPC - ASSOCIATION CONNECTING ELECTRONICS INDUSTRIES

J-STD-006 - Electronic Grade Solder Alloys and Fluxed and Non-fluxed Solid Solders for Electronic Soldering Applications Requirements for.

J-STD-004 - Soldering Fluxes Requirements for.

(Application for copies should be addressed to the Association Connecting Electronics Industries, 2215 Sanders Road, Northbrook, Illinois, 60062-6135, United States.)

VSA INFORMATION SYSTEMS

SOCIETY OF AUTOMOTIVE ENGINEERS (SAE)

SAE-AMS-R-6855 - Elastomer, Synthetic, Sheets, Strips, Molded or Extruded Shapes.

SAE-AS7928 - Terminals, Lug Splices, Conductor, Crimp Style, Copper, General Specification for.

(Application for copies should be addressed to the Society of Automotive Engineers, 400 Commonwealth Drive , Warrendale, Pennsylvania, 15096-0001.)

3. REQUIREMENTS

3.1 Specification sheets. The individual item requirements shall be as specified herein and in accordance with the applicable specification sheets. In the event of any conflict between the requirements of this specification and the specification sheets, the latter shall govern (6.2).

3.1.1 Switch categories. Switches furnished under this specification shall be category I or II as defined herein.

3.1.1.1 Category I. Switches completely defined by a military specification sheet.

3.1.1.2 Category II. Switches are the same as category I except for minor differences such as terminations, connectors, pressure ports, mounting means, pressure settings, or minor body dimensions which do not change the basic design or construction of the qualified witch. Category II switches shall be acquired from a source listed on the applicable qualified products list for the particular similar product in category I. Category II switches are non standard. Qualification and acceptance testing shall be limited to verification of requirements in excess of the applicable specification sheet.

3.2 Qualification. Switches furnished under this specification shall be products which are qualified for listing on the applicable qualified products list at the time set for opening of bids (see 4.5 and 6.3).

3.3 Material. Material shall be as specified herein. When a definite material is not specified, a suitable material shall be used which enables the switches to conform to the performance requirements of this specification. Acceptance or approval of any constituent material shall not be construed as a guaranty of the acceptance of the finished product (see 4.10.1).

3.3.1 Fungus-resistance. All materials shall be nonfungus nutrient in accordance with MIL-STD-810, Requirement 4.

3.3.2 Metals. All metal parts, other than current-carrying parts, shall be of corrosion-resistant material, or shall be suitably protected to resist corrosion. Paint is not acceptable for corrosion protection. Brass, copper, cadmium, or zinc shall not be used in contact with fuel. Cadmium or zinc shall not be used in contact with lube oil or hydraulic oil.

3.3.2.1 Dissimilar metals. When dissimilar metals are used in intimate contact with each other, protection against electrolysis and corrosion shall be provided. The use of dissimilar metals which, in contact, tend toward active electrolytic corrosion is not acceptable. However, metal plating or metal spraying of dissimilar base metals to provide similar or suitable abutting surfaces is permitted. The use of dissimilar metals separated by a suitable insulating material is also permitted. Dissimilar metals and compatible couples are defined in 6.5.

3.3.2.2 Magnesium. Magnesium and magnesium alloys shall not be used.

3.3.2.3 Aluminum. Aluminum and aluminum alloys shall be suitably protected against corrosion. When anodized, it shall be in accordance with MIL-A-8625. Internal parts not in contact with media or subject to wear may be chemically treated in accordance with MIL-C-5541.

3.3.2.4 Solder. Solder shall have a minimum melting point of 100°F above the maximum temperature rating of the pressure switch and shall conform to J-STD-006. Where solder is employed, flux shall be in accordance with J-STD-004. When stainless steel is used, corrosive flux may be used providing the device is cleaned and the flux is neutralized prior to final assembly.

3.3.3 Nonmetals. Switches shall not be adversely affected by weathering or aircraft, missile, and spacecraft fluids at the temperature specified for the applicable switch.

3.3.3.1 Plastic. Unless otherwise specified (see 3.1), thermosetting plastics shall be in accordance with ASTM-D5948; however, cotton-or-wood-flour-filled materials shall not be used. Thermoplastic shall not be used for the switchcase or cover. When used for noncase material, thermoplastics shall be in accordance with type I of ASTM-D4066-82. The plastic material used shall be self-extinguishing when tested in accordance with ASTM-D635, as applicable, to the thinnest section of the material used. The self-extinguishing requirement applies to all materials for external parts and enclosures regardless of whether the material used is procured to a military specification.

3.3.3.2 Ceramic. Ceramic insulating material shall meet or exceed the following characteristics:

Dielectric loss index: .016 Maximum
Average Dielectric strength: 180 to 199 volts/mil
Average flexural strength: 4,000 to 11,900 lbs/sq in

3.3.3.3 Potting compounds. Potting compounds used in contact with the atmosphere shall be in accordance with MIL-I-16923 and shall be compatible with the design requirements of the switch.

3.3.3.4 Rubber materials. Rubber materials used in contact with fuel and lubricating oil shall conform to MIL-P-5315, SAE-AMS-R-6855, MIL-R-25988, or MIL-R-83248. Rubber materials used in contact with hydraulic oil shall conform to MIL-P-25732.

3.3.4 Design and construction. Switches shall be of the design, construction, and physical dimensions specified (see 3.1).

3.4.1 Electrical ratings. Electrical ratings shall be as specified (see 3.1).

3.4.2 Case. The case shall be unsealed, watertight, or hermetically sealed as specified (see 3.1).

3.4.3 Chambers. The electrical pressure, and reference chambers, shall be unsealed, watertight, or hermetically sealed as specified (see 3.1).

3.4.4 Tamperproof calibration. Unless otherwise specified (see 3.1), the switches shall be sealed so that any tampering with the calibration after final adjustment by the manufacturer shall require removal of the switch from the application, dismantling of the switch, or the breaking of a seal.

3.4.5 Adjustments. Adjustments contained within the switch shall be positively locked to prevent loosening due to strain, shock, vibration, and other conditions incident to shipping, storage, installation, and service.

USA Information Systems, Inc.
(757)491-7525 / (800)872-8830
www.usainfo.com

3.4.6 Adjustable features (when applicable). When applicable features are specified (see 3.1), the switch shall be designed to provide a positive drift-free mechanism that is not affected by environments. The adjustable mechanism shall be accessible without the use of a special tool.

3.4.7 Mounting brackets. Unless otherwise specified (see 3.1), mounting brackets shall be securely attached to the switch in such a manner as to prevent any movement between the switch and the bracket.

3.4.8 External screw threads. Screw threads shall be in accordance with Handbook H28 or MIL-S-8879. Threading of nonmetallic parts shall not be permitted. Thread engagement shall be at least two full threads. All threaded parts shall be safety wired or suitably locked.

3.4.9 Weight. The maximum weight of the switch shall be specified (see 3.1).

3.4.10 Electrical connector. The electrical connector shall be as specified (see 3.1).

3.4.11 Pressure port. The pressure port shall be as specified (see 3.1).

3.4.12 Attitude. Switches shall be constructed so as to assure proper operation when mounted in any position.

3.4.13 Elastomers. Whenever elastomers are used, they shall be compatible with all media that contact them. Elastomers shall not be used in any application where pressure surges or pulsations may cause rubbing, wear, or decompression spalling. Elastomers may be used for dynamic seal provided the manufacturer submits acceptable evidence of performance to the preparing activity during the qualification test program on the submitted product. Cure date elastomers shall not be used.

3.5 Solderability (applicable to solderable terminals). When switches are tested as specified in 4.10.2, 95 percent of the total length of fillet between the standard wrap wire and the terminal shall be tangent to the surface of the terminal being tested. There shall be no pinholes or voids. A ragged or interupted line at the point of tangency between the fillet and the terminal under test shall be considered a failure. At the conclusion of the test there shall be no evidence of fracture, loosening of parts or any other mechanical failure.

3.6 Calibration. When switches are tested as specified in 4.10.3, the operating points (actuation and deactuation points) shall be within the tolerances specified (see 3.1). Switches that are rated for low level (see 3.31) or minimum current (see 3.32) shall be subjected to only these loads during qualification and Group A testing.

3.7 Proof pressure. When switches are tested as specified in 4.10.4, there shall be no evidence of damage and calibration shall be specified (3.1).

3.8 Contact resistance. When switches are tested as specified in 4.10.5, the initial contact resistance shall not exceed 100 milliohms (see table XIV, group I). After life (mechanical and electrical endurance), contact resistance shall not exceed 250 milliohms (see table XIV, group III).

3.9 High temperature. When switches are tested as specified in 4.10.6, there shall be no evidence of damage. The calibration shall be as specified (see 3.1), and proof pressure shall be as specified (see 3.1).

3.11 Insulation resistance. When switches are initially tested as specified in 4.10.8, the insulation resistance shall be not less than 1,000 megohms.

3.12 Dielectric withstanding voltage. When switches are tested as specified in 4.10.9, there shall be no arcing (air discharge), flashover (surface discharge), breakdown (puncture discharge), or damage. The leakage current shall not exceed 1 milliampere.

3.13 Acceleration. When switches are tested as specified in 4.10.10, there shall be no evidence of damage and the calibration shall be as specified (see 3.1).

3.14 Shock. When switches are tested as specified in 4.10.11, there shall be no separation of closed contacts or closure of open contacts exceeding 250 microseconds for method I and 5 milliseconds for method II. There shall be no evidence of damage. Calibration shall be as specified (see 3.1).

3.15 Connector torque (applicable to switches with electrical connectors). When switches are tested as specified in 4.10.12, there shall be no loosening, rotation, distortion, short circuit, or damage. Calibration shall be as specified (see 3.1).

3.16 Strength of terminals (as applicable). When switches are tested as specified in 4.10.13, there shall be no breakage, loosening, or rotating of terminals, and damage to the switch body.

3.17 Moisture resistance. When switches are tested as specified in 4.10.14, there shall be no breaking, spalling, cracking, or loosening of terminals. After humidity insulation resistance shall not be less than 100 megohms and not less than 1,000 megohms after drying. Calibration shall be as specified (see 3.1).

3.18 Short circuit. When switches are tested as specified in 4.10.15, there shall be no welding or sticking of contacts or other damage. Calibration shall be as specified (see 3.1).

3.19 Overload cycling. When switches are tested as specified in 4.10.16, there shall be no mechanical damage or electrical failure.

3.20 Seal (as applicable (see 4.10.17)).

3.20.1 Hermetic. When switches are tested as specified in 4.10.16, there shall be no mechanical or electrical failure.

3.20.2 Watertight. When switches are tested as specified in 4.10.17.1, the leakage rate shall not exceed 1×10^{-8} standard atmosphere cubic centimeter per second (atm cm^3/s).

3.20.3 Media proof. When switches are tested as specified in 4.10.17.2 and/or 4.10.17.3, there shall be no leakage as evidenced by a large or continuous stream of bubbles.

3.21 Coincidence of operating and releasing points (applicable to multipole switches only) . When switches are tested as specified in 4.10.18, all poles shall transfer contacts within 10 milliseconds, unless otherwise specified (see 3.1).

3.22 Vibration. When switches are tested as specified in 4.10.19, there shall be no opening of closed contacts, nor closing of open contacts in excess of 250 microseconds. There shall be no evidence of broken, deformed, displaced, or loose parts. Calibration shall be as specified (see 3.1).

3.23 Life (mechanical and electrical endurance). When switches are tested as specified in 4.10.20, each contact shall open and close its circuit in proper sequence during each cycle. During and after the test there shall be no evidence of malfunction, damage or leakage. Calibration shall be as specified (see 3.1).

3.24 Salt spray. When switches are tested as specified in 4.10.21, there shall be no warping, cracking, excessive corrosion, or other damage, and the specified cycling shall be completed without failure. The mounting hardware shall be readily removable at the conclusion of the test. Before drying insulation resistance shall be not less than 20 megohms an d not less than 500 megohms after drying. Calibration shall be as specified (see 3.1) and proof pressure shall be as specified (see 3.1).

3.25 Burst pressure. When switches are tested as specified in 4.10.22, there shall be no evidence of leakage.

3.26 Sand and dust. When switches are tested as specified in 4.10.23, there shall be no evidence of mechanical damage. Calibration shall be as specified (see 3.1). This test is not applicable to switches with all chambers hermetically sealed.

3.27 Explosion (when specified (see 3.1)). When switches are tested as specified in 4.10.24, no explosion shall occur within the switch or in the chamber.

3.28 Flame (when specified (see 3.1)). When switches are tested as specified in 4.10.25, there shall be no residual flame from the unit under test upon removal of the external flame source and no evidence of external leakage of the media.

3.29 Marking. Switches shall be marked in accordance with MIL-STD-1285 with the military part number or the manufacturer's part number when specified (see 6.2), date code, and the manufacturer's trademark or code symbol (see 4.10.1).

3.30 Recycled, recovered, or environmentally preferable materials. Recycled, recovered, or environmentally preferable materials should be used to the maximum extent possible provided that the material meets or exceeds the operational and maintenance requirements, and promotes economically advantageous life cycle costs.

3.31 Low level (when specified (see 3.1 and 6.2)). When switches are tested as specified in 4.10.20.2.b, there shall be no failures. A failure shall be a contact resistance exceeding 100 milliohms either during or after the test.

3.32 Minimum current (intermediate current, when specified (see 3.1 and 6.2)). When switches are tested as specified in 4.10.20.2c, there shall be no failures. A failure is defined as a cycle of operation during which any switch circuit under test fails to close or open in proper sequence as detected by the monitoring device.

3.33 Workmanship. Switches shall be processed in such a manner as to be uniform in quality, free from cracked or displaced parts, sharp edges, burrs, and other defects that will affect life, serviceability, or appearance.

4. VERIFICATION

4.1 Classification of inspection. The inspections specified herein are classified as follows:

a. Materials inspection (see 4.3).

b. Qualification inspection (see 4.5).

c. Conformance inspection (see 4.6).

4.2 Test equipment and inspection facilities. Test and measuring equipment and inspection facilities of sufficient accuracy, quality, and quantity to permit performance of the required inspection shall be established and maintained by the contractor. The establishment and maintenance of a calibration system to control the accuracy of the measuring and test equipment shall be in accordance with ANSI/NCSL Z540-1, ISO 10012-1 or approved equivalent.

4.3 Materials inspection. Materials inspection shall consist of certification supported by verifying data that the materials listed in table XIII, used in fabricating the switches, are in accordance with the applicable referenced specifications of requirements prior to such fabrication.

TABLE XIII. Materials inspection.

Material	Requirement paragraph	Applicable specification
Fungus resistant	3.3.1	MIL-STD-810
Aluminum	3.3.2.3	MIL-A-8625 MIL-C-5541
Solder	3.3.2.4	J-STD-006
Solder flux	3.3.2.4	J-STD-004
Plastic	3.3.3.1	ASTM-D5948 ASTM-D4066-82 ASTM-D635
Ceramic	3.3.3.2	
Potting Compounds	3.3.3.3	MIL-I-16923
Rubber materials	3.3.3.4	MIL-P-5315 SAE-AMS-R-6855 MIL-R-25988 MIL-R-28348/1 MIL-P-25732

4.4 Inspection conditions. Unless otherwise specified herein, all inspections shall be performed in accordance with the test conditions specified in the GENERAL REQUIREMENTS of MIL-STD-202.

4.5 Qualification inspection. Qualification inspection shall be performed at a laboratory acceptable to the Government (see 6.3) on sample units produced with equipment and procedures normally used in production.

4.5.1 Sample (unless otherwise specified (see 3.1)). The number of switches to be subject to qualification inspection shall be as specified in table XIV.

4.5.2 Inspection routine. The sample shall be subjected to the inspections specified in table XIV, in the order shown. All sample units shall be subject to the inspection for group I. The sample shall then be divided a specified in table XIV for groups II to VII inclusive.

4.5.3 Failures. One or more failures shall be cause for refusal to grant qualification approval.

4.5.4 Extent of qualification.

4.5.4.1 Single submission. Qualification shall be restricted to the type submitted.

4.5.4.2 Group submission. The extent of qualification shall be in accordance with the applicable specification sheet.

4.5.5 Verification of qualification. Every 12 months, the manufacturer shall provide verification of qualification to the qualifying activity. Continuation is based on meeting the following requirements:

a. Design of switch has not been modified (every 12 months).

b. Verification of group A lot acceptance (every 12 months) (see 4.6.1.2).

4.6 Conformance inspection.

4.6.1 Inspection of product for delivery. Inspection of product for delivery shall consist of group A inspection.

4.6.1.1 Inspection lot. An inspection lot shall consist of all switches covered by a single specification sheet produced under essentially the same conditions, and offered for inspection at one time.

4.6.1.2 Group A inspection. Group A inspection shall consist of the inspections specified in table XV, in the order shown.

4.6.1.2.1 Sampling plan. Statistical sampling shall be as specified in table XV and table XVI.

4.6.1.2.2 Subgroup 1. A sample of parts shall be randomly selected in accordance with table XVI, minor defect sampling plan.

4.6.1.2.3 Subgroup 2. A sample of parts shall be randomly selected in accordance with table XVI, minor defect sampling plan.

4.6.1.2.4 Subgroup 3. Two samples shall be selected randomly from each inspection lot.

4.6.1.2.5 Rejected lots. If an inspection lot is rejected, the contractor may rework it to correct the defects, or screen out the defective units, and resubmit for inspection. Resubmitted lots shall be inspected using tightened inspection. Such lots shall be separate from new lots, and shall be clearly identified as reinspected lots.

4.6.1.2.6 Disposition of sample units. Sample units that have been subjected to group A inspection shall be delivered on the contract.

4.7 Switch traceability. The manufacturer shall record and retain the calibration records by part number and serial number for five years.

4.8 Inspection of packaging. The sampling and inspection of the preservation packaging, packing and container marking shall be in accordance with the requirements of MIL-S-28786.

4.9 Retention of qualification. To retain qualification, the contractor shall submit a summary of group A and a certification of compliance at yearly intervals via the Government quality assurance representative. The summary of group A shall indicate the number of inspection lots that passed and the number that failed (including the number and type of failures) together with corrective action taken to correct failures. The certification of compliance shall result in loss of qualification.

4.10 Methods of examination and test.

4.10.1 Visual inspection. Switches shall be examined to verify that the design, construction, marking, and workmanship are in accordance with the applicable requirements (3.1, 3.3, 3.4, 3.29 and 3.33).

VSA INFORMATION SYSTEMS

TABLE XIV. Qualification inspection.

Inspection	Requirement paragraph	Method paragraph
Group I (all sample units)		
Visual inspection	3.1, 3..3, 3.4, 3.29 and 3.33	4.10.1
Solderability (as applicable) 2/	3.5	4.10.2
Calibration	3.6	4.10.3
Proof pressure	3.7	4.10.4
Contact resistance	3.8	4.10.5
High temperature	3.9	4.10.6
Low temperature	3.10	4.10.7
Insulation resistance	3.11	4.10.8
Dielectric withstanding voltage	3.12	4.10.9
Group II (4 sample units from group I)		
Acceleration	3.13	4.10.10
Shock	3.14	4.10.11
Connector torque (applicable to switch with electrical connector)	3.15	4.10.12
Strength of terminals	3.16	4.10.13
Moisture resistance	3.17	4.10.14
Dielectric withstanding voltage	3.12	4.10.9
Short circuit	3.18	4.10.15
Overload cycling	3.19	4.10.16
Seal (as applicable)	3.20	4.10.17
Group III (sample units, 2 each electrical load from group 1)		
Coincidence of operating and releasing points (applicable to multipole switches only)	3.21	4.10.18
Vibration	3.22	4.10.19
Life (mechanical and electrical endurance)	3.23	4.10.20
Low level (when specified)	3.31	4.10.20.2.b
Minimum current (when specified)	3.32	4.10.20.2.c
Contact resistance	3.8	4.10.5
Seal (as applicable)	3.20	4.10.17
Dielectric withstanding voltage	3.12	4.10.9
Group IV (1 sample unit from group III)		
Salt spray	3.24	4.10.21
Burst pressure	3.25	4.10.22
Group V (2 sample units from group II)		
Sand and dust	3.26	4.10.23
Group VI (1 sample from group V)		
Explosion 2/	3.27	4.10.24
Group VII (1 sample from group VI)		
Flame 2/	3.28	4.10.25

1/ Only two samples shall be subjected to this test.
2/ When specified.

TABLE XV. Group A inspection.

Inspection	Requirement paragraph	Method Paragraph
Subgroup 1		
Seal (as applicable)[1/]	3.20	4.10.17
Hermetic	3.20.1	4.10.17.1
Watertight	3.20.2	4.10.17.2
Media proof	3.20.3	4.10.17.3
Proof pressure	3.7	4.10.4
Calibration	3.6	4.10.3
Subgroup 2		
Visual inspection	3.1, 3.3, 3.4, 3.29 and 3.33	4.10.1
Subgroup 3		
Dielectric withstanding voltage	3.12	4.10.9

1/ In process inspection may be used to satisfy these requirements.

TABLE XVI. Group A Sampling Plan.

Lot size	Number of switches to be tested	
	Subgroup 2	Subgroup 1
1 - 5	All	All
6 - 12	5	All
13 - 50	5	13
51 - 90	7	13
91 - 150	11	13
151 - 280	13	20
281 - 500	16	29
501 - 1200	19	34
1201 - 3200	23	42
3201 - 10000	29	50
10001 and over	35	60

4.10.2 Solderability (applicable to solderable terminals)(see 3.5). Switches shall be tested in accordance with method 208 of MIL-STD-202. The following details and exception shall apply:

a. Number of terminals to be tested - All.

b. Depth of immersion in molten solder - Terminals shall be immersed to the maximum extent possible.

c. Examination of terminals - Method for evaluation of lugs and tabs shall apply.

d. Dipping machine - Need not be used.

4.10.3 Calibration (see 3.6). Each time calibration is required, the calibration cycle below shall be performed three consecutive times. NOTE: During group A inspection, the system procedure hold time may be reduced to 10 seconds.

4.10.3.1 Type I (absolute pressure) and II (gage pressure) switches. Switches shall be connected to a device supplying the specified media (see 3.1) or other approved media at a pressure that can be varied from zero to at least the system pressure specified (see 3.1). A suitable electrical readout device may be used. The following procedure shall apply:

a. Increase the pressure until the switch actuates and record the actuation point. Further increase the pressure to system and maintain for not less than 60 seconds. Decrease the pressure until the switch deactuates, then record the deactuation point.

b. Increase the pressure until the switch actuates and record the actuation point. Decrease the pressure until the switch deactuates and record the deactuation point, the decrease the pressure to zero.

c. The rate of pressure increase or decrease shall not exceed 1 percent of system pressure per second within 10 percent of the switching point.

4.10.3.2 Type III (differential pressure) switches. Switches shall be connected to a device supplying the specified media (see 3.1) or approved substitute at a pressure or pressures that can be varied from zero to at least proof pressure specified (see 3.1). Reference and variable pressure shall be independent. A suitable electrical readout device may be used. The following procedures shall apply:

a. The reference and variable pressure shall be increased to their respective system pressures (see 3.1).

b. Increase or decrease, as applicable, the variable pressure and record the differential pressure at which the switch actuates.

c. Increase the variable pressure to proof pressure and maintain for not less than 60 seconds.

d. Decrease the variable pressure and record the differential pressure at which the switch deactuates. Then decrease pressures to zero.

e. The rate of variable increase or decrease shall not exceed 1 percent of system pressure per second within 10 percent of the switching points.

4.10.4 Proof pressure (see 3.7).

4.10.4.1 Type I (absolute pressure and II (gage pressure switches). Switches shall be connected to a device supplying the specified media (see 3.1) or approved substitute at a pressure that can be varied from zero to the proof pressure specified (see 3.1). A suitable electrical device may be used in lieu of switching the specified electrical loads. The following procedure shall apply:

a. Increase the pressure until the switch actuates and record the actuation point. Further increase the pressure to the proof pressure and maintain for 60 seconds. Decrease the pressure until the switch deactuates, then record the deactuation point.

b. Increase the pressure again until the switch actuates and record the actuation point. Decrease the pressure until the switch deactuates and record the deactuation point. Then decrease the pressure to zero.

c. The rate of pressure increase or decrease shall not exceed 1 percent of system pressure per second within 10 percent of the switching points.

NOTE: During the group A inspection, the proof pressure hold time may be reduced to ten seconds.

4.10.4.2 Type III (differential pressure) switches. Switches shall be tested in accordance with 4.10.4.1 when a proof pressure check is required on type III switches. The proof pressure shall be applied to both ports simultaneously, unless otherwise specified (see 3.1).

4.10.5 Contact resistance (see 3.8). Switches shall be tested in accordance with method 307 of MIL-STD-202. The following details and exceptions shall apply:

a. Measurements shall be made between the terminals of the contacts of the same pole forming a switching circuit. Measurements shall be made for each pole of multipole switches.

b. Test current and maximum test voltage - The test current and test voltage may be any value compatible with the test method used, but shall not exceed the rated values of the switch (see 3.1).

c. Number of activations before measurement - 3.

d. Number of test activations - 3.

e. Number of measurements per activation - 1.

4.10.6 High temperature (see 3.9). Switches shall be subjected to the highest temperature specified (see 3.1) for a minimum of three hours. While at this temperature, the switches shall be tested in accordance with calibration (see 4.10.3) and proof pressure (see 4.10.4).

4.10.7 Low temperature (see 3.10). Switches shall be subjected to the lowest temperature specified (see 3.1) for a minimum of three hours. While at this temperature, the switches shall be tested in accordance with calibration (see 4.10.3) and proof pressure (see 4.10.4).

4.10.8 Insulation resistance (see 3.1). Insulation resistance shall be measured in accordance with method 302 of MIL-STD-202. The following details shall apply:

a. Test condition letter - B.

b. Points of measurements.
   1. Between adjacent terminals of different poles.
   2. Between each terminal and the metal mounting plate with switches mounted by their normal mounting means.

4.10.9 Dielectric withstanding voltage (see 3.12). Switches shall be tested in accordance with 4.10.9.1 and when applicable 4.10.9.2 (see 3.1). The following details and exceptions shall apply:

a. Magnitude of test voltage - AC per table XVII.

b. Points of application of test voltage - Between all mutually insulated parts and ground.

c. Maximum leakage current - 1 milliampere.

d. Examination after test - Switches shall be examined for evidence of arcing, flashover, breakdown, and damage.

4.10.9.1 At atmospheric pressure. The following detail shall apply: Method 301 of MIL-STD-202.

4.10.9.2 At reduced barometric pressure. The following detail shall apply:

a. Method 105 of MIL-STD-202 shall be used.

b. Method of mounting - normal mounting means.

c. Test condition - The reduced pressure used shall be that of the rated altitude of the switch (see 3.1).

TABLE XVII. Magnitude of test voltage. 1/

System voltage	At atmospheric pressure		At reduced barometric pressure
	1 minute ac test voltage, qualification	2-5 seconds ac test voltage, quality assurance	2-5 seconds ac test voltage
28 Vdc 2/	250	250	200
28 Vdc	1050	1250	500
115 Vac	1250	1500	500
115/200 Vac	1500	1800	700

1/ All test voltages shown are rms.
2/ When specified (see 3.1), this applies to absolute pressure switches.

USA Information Systems, Inc.
(757)491-7525 / (800)872-8830
www.usainfo.com

4.10.10 Acceleration (see 3.13). Switches shall be tested in accordance with method 212 of MIL-STD-202. The following details shall apply:

a. Mounting of specimen - Normal mounting means.

b. Electrical loading - As specified (see 3.1).

c. Test condition letter - As specified (see 3.1).

d. Measurement - During test, switches shall be tested in accordance with calibration (see 4.10.3) with a total of three complete cycles of operation in each of the three mutually perpendicular directions.

e. For type III (differential pressure) switches - The reference port shall be pressurized at the normal reference system pressure during test.

4.10.11 Shock (see 3.14). Switches shall be tested in accordance with 4.10.11.1 and, in addition, 4.10.11.1 when specified (see 3.1). The following details and exceptions shall apply to both methods:

a. Contact-chatter monitoring shall be in accordance with method 310 of MIL-STD-202.

b. Mounting - Switches shall be mounted by their normal mounting means.

c. Electrical load conditions - The electrical load shall consist of the monitor circuit only.

d. Pressure conditions - Half of the switches shall be tested in deactuated position at 10 percent of 1.5 lb_f/in^2, whichever if greater, below the actuation pressure, and half the switches shall be tested in the actuated position at 10 percent or 1.5 lb_f/in^2, whichever is greater, above the deactuation pressure.

e. Measurements during shock - Switch contact stability shall be continuously monitored during shock. If more than one contact pair is being monitored simultaneously by one chatter indicator, open contact pairs shall be connected in parallel and closed contact pairs shall be connected in series during this test. If an indication of a contact opening is greater than specified, the test shall be modified by applying successive identical blows in the same plane to monitor contacts, switch by switch, to determine if a switch is defective.

f. Measurements after shock - Switches shall be tested in accordance with calibration (see 4.10.3).

g. Examination after test - Switches shall be examined for evidence of broken, deformed, displaced, or loose parts.

4.10.11.1 Method I. Specified pulse.

a. Method 213 of MIL-STD-202.

b. Test condition - A, B, C, or D, as specified (see 3.1).

c. Allowable contact opening or closure - 250 microseconds maximum.

4.10.11.2 Method II. High-impact.

a. Method 207 of MIL-STD-202.

b. Allowable contact opening or closure - 5 milliseconds maximum.

4.10.12 Connector torque (applicable to switches with electrical connectors (see 3.15)). Switches shall be mounted by their normal mounting means on a rigid metal fixture. A torque of 5-foot pounds shall be applied to the electrical connector in a plane perpendicular to its central axis in the direction that would tighten the mating part and hold for 1 minute. If the normal mounting means of the switch includes a type of scrap or clamp that would permit rotation of the entire switch in its mounting device during this test, the switch shall be held stationary by suitable mechanical restraints while the torque is applied. This test is intended to verify the connector mounting suitability and does not confirm integrity of connector design or construction. Following this test, switches shall be tested in accordance with calibration (see 4.10.3).

4.10.13 Strength of terminals (when applicable)(see 3.16). Terminals shall be tested in accordance with 4.10.13.1 or 4.10.13.2, as applicable. Unless otherwise specified (see 3.1), switches shall be mounted by their normal mounting means.

4.10.13.1 Threaded terminals. Threaded terminals shall be subjected to the applicable static values of force and torque specified in table XVIII for I minute. The force shall be gradually applied as a pull along the axis of the threads, perpendicular to the axis of the threads and in the direction most likely to cause failure. The torque shall be applied in the direction that will tighten the screws.

TABLE XVIII. Static values of force and torque.

Thread size	Force (pounds)	Torque (Inch-pounds) (lb/in)	
		Steel	1/ Nonferrous
4 - 40	5	8	5
6 - 32	30	14	10
8 - 32	35	22	20
10 - 32	40	38	32
10 - 24	40	42	35
1/4 - 28	50	100	75

1/ The torque values are intended as a test for terminals and not for terminal hardware. When brass terminal screws are used, it may be necessary to substitute steel screws during this test because torque values exceed shear strength of brass screws in certain sizes.

4.10.13.2 Solder-lug and wire lead terminals. Switches shall be tested in accordance with method 211 of MIL-STD-202. The following details and exceptions shall apply:

a. Test condition letter - A.

b. Applied force:
   1. Solder lug -9 pounds (lb.).
   2. Wire-lead - 15 pounds (lb) unless otherwise specified (see 3.1).

c. Direction of force - Force shall be applied along three mutually perpendicular axes of the switch.

4.10.14 Moisture resistance (see 3.17). Switches shall be tested in accordance with method 106 of MIL-STD-202. The following details shall apply:

a. Load voltage - As specified (see 3.1).

b. Polarization - During steps 1 to 6 inclusive, a dc potential of 100 volts shall be applied between current-carrying parts and panel. Negative polarity shall be applied to the panel. Steps 7a and 7b are not applicable.

c. Final measurements - Immediately after the conclusion of the test and while the switches are still in the humidity chamber, the insulation resistance shall be measured (see 4.10.8). Switches shall then be examined for evidence of breaking, cracking, spalling, and loosening of terminals. The calibration shall be performed (see 4.10.3).

4.10.15 Short circuit (see 3.18). Switches shall be tested in accordance with the following details:

a. The switches shall be inserted in a circuit calibrated to supply current equal to 60 times the rated resistive load at the lowest rated dc voltage specified (see 3.1). When only one electrical load is specified (see 3.1), 60 times that load shall be used.

b. The switches shall be connected in series to a thermal type circuit breaker or fuse in accordance with figure 1 and table XIX.

c. The wire shall be as specified in MIL-W-5086 and table XIX as determined by the rated resistive load of the switch (see 3.1) or load specified (see 4.10.15a).

d. Terminals shall be in accordance with SAE-AS7928.

e. Calibration shall be made with a substitute circuit breaker (or fuse) without the switch being tested and with the switch leads in the circuits.

f. The calibrated circuit shall be closed by the switch used to calibrate the circuit. The procedure shall be performed 10 times. After closure the switch contacts shall be checked for proper opening by any suitable continuity test method. The circuit breaker shall be reset for the fuse replaced after each closure. Two minutes minimum shall elapse between closures. For multipole switches any (one) pole shall be tested.

4.10.16 Overload cycling (see 3.19). The switch shall make and break 150 percent of the rated resistive load (see 3.1) at the applicable voltage and electrical frequency for 50 cycles of operation at room conditions. When only one electrical load is specified (see 3.1) that load shall be used.

4.10.17 Seal (as applicable (see 3.20)). Sealed pressure, electrical, and reference chambers shall be tested in accordance with the following tests:

4.10.17.1 Hermetic (see 3.20). Hermetically sealed chambers shall be tested in accordance with method 112 of MIL-STD-202. The following details and exception shall apply:

a. Test condition letter - C.

b. Procedure - As applicable.

c. Leakage-rate sensitivity - 1×10^{-8} atm cm^3/s of helium. If a tracer gas other than helium is used, proof of the specific conversion factor shall be submitted to the preparing activity.

TABLE XIX. Wire size and circuit breaker or fuse designations.

Amperes 1/	MIL-W-5086 wire size	Circuit breaker or fuse
3.0 or less	20	The size of the circuit breaker of fuse shall be equivalent to the rated resistive current of the test sample.
5.0	20	
7.5	18	
10.0	18	
15.0	18	
18.0	16	
20.0	16	
25.0	14	
30.0	14	
40.0	12	
60.0	10	
80.0	8	
175.0	2	

1/ Where the wire size, circuit breaker, or fuse size does not coincide with the required current, the next larger wire size, circuit breaker, or fuse shall be used.

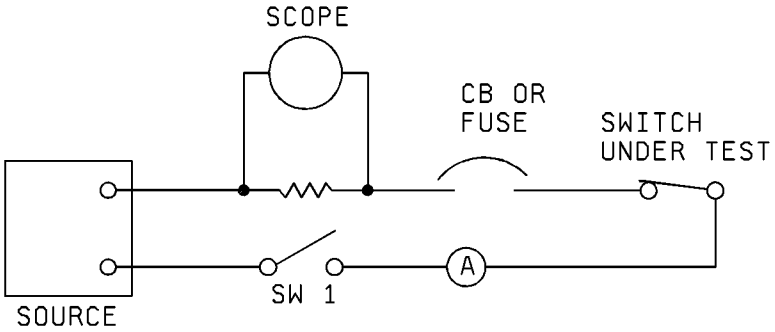

FIGURE I. Circuit diagram for short circuit test

4.10.17.2 Watertight electrical and reference chambers (see 3.20.2). Switches shall be immersed in a container of water containing approximately 1 percent aerosol or approved equivalent, and the container shall be placed in a vacuum chamber. The absolute pressure, of the chamber shall be reduced to 1.3 inches of mercury and maintained for 1 minute or until air bubbles cease to be given off by the water, whichever is longer. The absolute pressure shall be raised to 2.5 inches of mercury, and maintained for 2 minutes. During immersion, the switches shall be observed for evidence of a continuous stream of bubbles.

4.10.17.3 Media proof (see 3.20.3). Subject switches to proof pressure for 2 minutes using the media specified (see 3.1) with chamber pressure continuously being monitored. Isolate the chamber at proof pressure with the chamber disconnected from the pressure source. Under that condition, the pressure shall not drop more than the amount specified (see 3.1) for the first 30 seconds to allow stabilization of test equipment.

4.10.18 Coincidence of operating and releasing points (applicable to multipole switches only (see 3.21)). Switches shall be connected to suitable indicating circuits, and to a device supplying the specified media (see 3.1) or approved substitute at a pressure that can be varied through the actuation and deactuation points. For (type III differential pressure switches) the reference port shall be pressurized at the nominal reference system pressure during test. The variable pressure shall be increased and decreased slowly and uniformly with no external vibratory influence, and the rate at which the pressure is increased or decreased shall not exceed 1 percent of system pressure per second within 10 percent of the switching points. All poles shall transfer contacts within the operating tolerances specified (see 3.1).

4.10.19 Vibration (see 3.22). Switches shall be tested in accordance with 4.10.19.1, and when specified (see 3.1) 4.10.19.2. The following details and exceptions shall apply:

a. Tests and measurements before vibration - Not applicable.

b. Mounting - Switches shall be mounted by their normal mounting means on a rigid metal panel. The mounting fixture shall be free from resonances over the test frequency range.

c. Electrical load conditions - The electrical load shall consist of the monitor circuit only.

d. Measurements during vibration - Switch contact stability shall be continuously monitored during vibration. If more than one contact pair is being monitored simultaneously by one chatter indicator, open contact pairs shall be connected in parallel and closed contact pairs shall be connected in series during this test. If there is an indication of a contact opening greater than specified, the test shall be modified so switches can be individually tested to determine if they are defective.

e. Measurements after vibration - Calibration (see 4.10.3).

f. Examination after test - Switches shall be examined for change in actuated position, and evidence of broken, deformed, displaced, or loose parts.

4.10.19.1 Vibration, high frequency.

a. Method 204 of MIL-STD-202.

b. Test condition letter - A, B, C, or D, as specified (see 3.1).

c. Method of determining resonance, and measurements during test - All checks for resonance and contact disturbance shall be conducted with the switches being cycled between actuation and deactuation at switching rate of three cycles per minute with the pressure rise and decay rate not exceeding 1 percent of system pressure of 0.1 lb_f/in^2 minimum per second within 10 percent of the switching points.

d. Switches shall be subjected to two cycles of operation at each of the following frequencies - 5, 10, 20, 40, 80, 100, and every 100 Hz to and including 2000 Hz, except that test condition A shall be to 500 Hz. If resonance is detected, the switches shall be vibrated for 20 minutes at each resonance observed.

e. Contact disturbance shall be monitored within 10 percent of the switching points during vibration by using a test circuit in accordance with method 310 of MIL-STD-202 or equivalent.

f. The recordings need not be submitted with the qualification test report. However, the report shall state that the test was successfully accomplished. The recordings shall be maintained by the manufacturer, and made available when requested by the preparing activity.

4.10.19.2 Random vibration (when specified (see 3.1)).

a. Method 214 of MIL-STD-202.

b. Test condition II, letter E, 1.5 hours.

4.10.20 Life (mechanical and electrical endurance)(see 3.23). Switches shall be tested in accordance with 4.10.20.1 and then 4.10.20.2. The media specified (see 3.1) or an approved substitute shall be used. The reference port of type III (differential pressure) switches shall be pressurized at the nominal reference system pressure during test. The test sequence in table XX shall be followed.

TABLE XX. Mechanical and electrical endurance test sequence.

Test	Duration of test	Environmental conditions
Pump ripple	200 hours total	Room ambient temperature Room ambient pressure
Operational Cycling	30% of mechanical life, 30% of electrical life	High temperature 1/ Room ambient pressure
	30% of mechanical life, 30% of electrical life	Low temperature 1/ Room ambient pressure
	40% of mechanical life, 40% of electrical life	Room ambient temperature Room ambient pressure 2/

1/ The temperature extremes shall be the specified high and low operating temperatures (see 3.1). A 2-hour soak at the applicable temperature shall precede each test.
2/ For switches rated above 10,000 feet altitude.

4.10.20.1 Pump ripple. Switches shall be subjected to the pressure conditions specified in 4.10.20.1a, b, and c, in that order for a total of 200 hours. The electrical load shall be as specified (see 3.1). The amplitude and frequency of the pressure pulsations that modulate the applicable steady pressure shall be as specified (see 3.1). Following application of each group of pressure conditions, switches shall be examined for evidence of malfunction, damage, or leakage, and calibration shall be performed (see 4.10.3).

a. Apply a steady state pressure equal to the recorded actuation pressure of the switch being tested plus 10 percent of the increasing set point (see 3.1), and expose to the pressure pulsation conditions for 50 hours.

b. Apply steady state pressure equal to the recorded deactuation pressure or zero, whichever is less, and expose to the pressure pulsation conditions for 50 hours. The pressure shall not fall below zero, i.e., negative pressure.

c. Apply a steady state pressure equal to the pressure between the recorded actuation and deactuation pressures (center of the dead band) and expose to the pressure pulsation conditions for 100 hours.

4.10.20.2 Operational cycling. Switches shall be subjected to the total number of mechanical and electrical cycles specified (see 3.1), in the order and at the conditions stated in table XX. One cycle shall consist of raising the pressure from zero psig (lb_f/in^2g) or psia (lb_f/in^2a), as applicable, and holding at zero before initiating another cycle. Unless otherwise specified (see 3.1), the hold times shall be as equal as is practicable. The rate of pressure rise shall be as specified (see 3.1). For each set of environmental conditions, the required number of electrical cycles shall be performed simultaneously with the required mechanical cycles, except when the mechanical life requirement exceeds the electrical life requirement, electrical life testing shall be initiated at such time during mechanical life tests. The electrical loads shall be as specified (see 3.1). DC inductive loads shall use inductors which have response and stored energy values as indicated in figure 2 and figure 3; AC inductive loads shall provide rated current at 0.7 ± 0.05 lagging power factor. Following testing under each environmental condition, switches shall be examined for evidence of malfunction, damage, or leakage, and calibration shall be performed (see 4.10.3).

a. Standard current (when specified (see 3.1)).

b. Low level (when specified (see 3.1)). Switches shall be tested for the number of cycles specified (see 3.1) as follows:
   1. Contact load - Each switch contact shall make, carry, and break a resistive load of 10 milliamperes maximum at an open circuit voltage of 30 millivolts maximum dc or peak ac. Both normally open and normally closed contacts shall be loaded. Contacts shall be connected to individual loads.
   2. Operate cycles - Rate not to exceed 6 cycles per minute.
   3. Monitoring cycles - The monitoring equipment shall provide a record of the number of cycles and shall record failures or discontinue the test if a failure occurs. During each closure the contact potential shall be monitored for at least 50 percent of the time the contacts are closed.

c. Minimum current (intermediate current)(when specified, see 3.1). Switches shall be subjected to the number of cycles of make and break operations specified (see 3.1), in a circuit having a 27+3, -0 volt dc source and a load consisting of the coil of relay, part number M5757/10-033, or equivalent. The cycling rate shall be 60 cycles per minute maximum and switches shall be monitored for make and break operations.

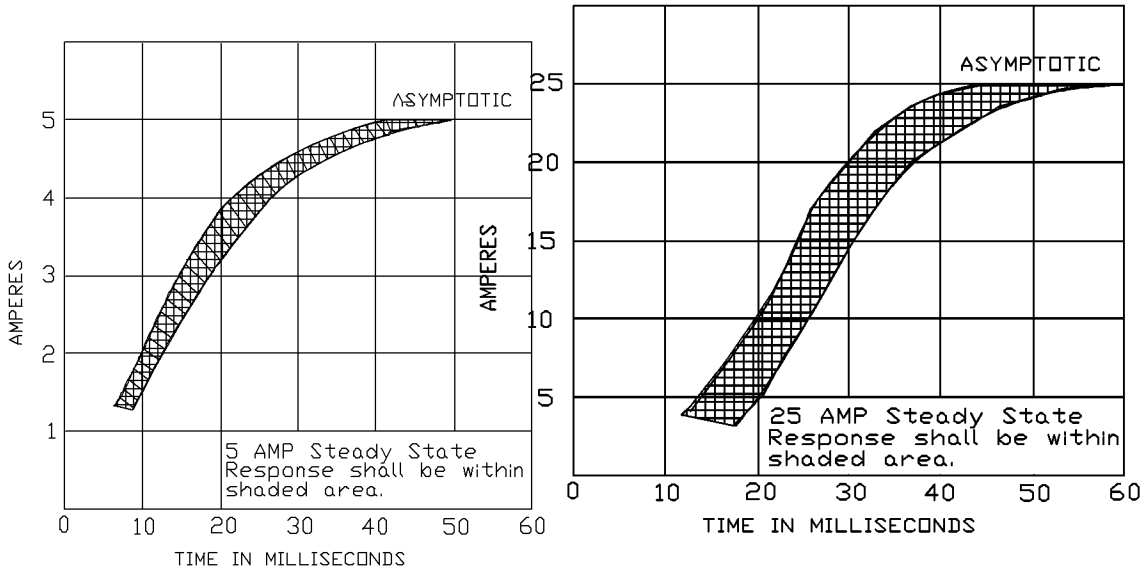

FIGURE 2. Response (current vs time) Type I inductors only.

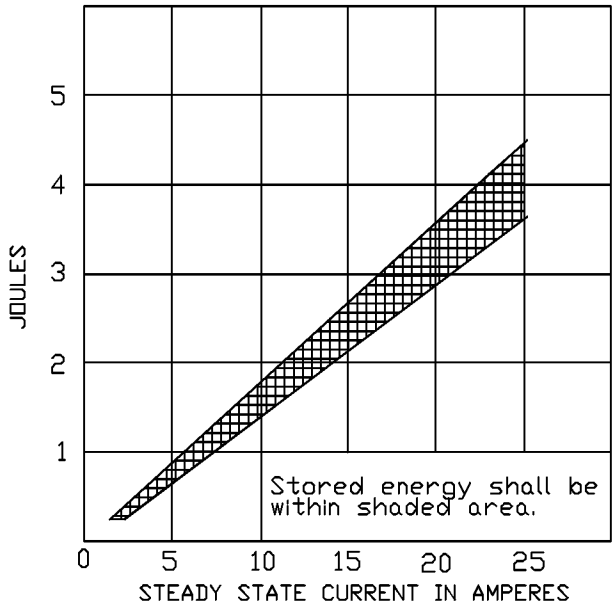

FIGURE 3. Stored energy (joules vs current) Type I inductors only.

4.10.21 Salt spray (corrosion, see 3.24). Switches shall be tested in accordance with method 101 of MIL-STD-202. This test shall be performed with pressure ports and electrical connectors suitably capped or plugged; mating connectors may be used. Unless otherwise specified (see 3.1), external wiring shall be exposed during test. The following details shall apply:

a. Test condition letter - A.

b. Measurements after exposure - Immediately after the test and without drying or wiping, insulation resistance shall be measured (see 4.10.8). Salt deposits on normally exposed external surfaces may then be removed. Care shall be taken to not allow water to enter the specimen. Following a drying period, insulation resistance shall be measured (see 4.10.8). Switches shall then be examined for evidence of corrosion and other damage, and tested as specified in calibration (see 4.10.3) and proof pressure (see 4.10.4).

4.10.22 Burst Pressure (see 3.25). Switches shall be subjected to the burst pressure specified (see 3.1) for 10 minutes. Switches shall be examined for leakage by visual inspection and by testing in accordance with the watertight test (see 4.10.17.2). Unless otherwise specified (see 3.1) type III (differential pressure) switches shall have burst pressure applied simultaneously to the reference pressure and variable pressure ports.

4.10.23 Sand and dust (see 3.26). Switches shall be tested in accordance with method 110 of MIL-STD-202. This test shall be performed with pressure ports and electrical connectors suitably capped or plugged; mating connectors may be used. The following details shall apply:

a. Test condition letter - B.

b. Measurements - Following the test, switches shall be examined for evidence of mechanical damage, and tested in accordance with calibration (see 4.10.3).

4.10.24 Explosion (see 3.27).

4.10.24.1 Method I. Switches shall be tested in accordance with method 109 of MIL-STD-202. Switches shall be operated at their maximum rated dc inductive current and open-circuit voltage (see 3.1). When a dc inductive load is not specified, the highest resistive load (see 3.1) shall be used. A minimum of three operational cycles shall be performed at each simulated altitude during the period of altitude reduction.

4.10.24.2 Method II. Switches with hermetically sealed electrical chambers shall be tested in accordance with procedure II, method 511 of MIL-STD-810. The electrical loads shall be highest ac or dc voltage and currents specified (see 3.1).

4.10.25 Flame (see 3.28). Switches shall be tested in accordance with method 111 of MIL-STD-202. The following details shall apply:

a. Switches shall be connected to a pressure source supplying the specified system pressure (see 3.1). The reference port of type III (differential pressure) switches shall be pressurized at the nominal reference system pressure. The media specified (see 3.1) or an approved substitute shall be used.

b. The point of impingement of the applied flame shall be at the top center of the specimen, except when a mounting strap or clamp is located on center. Then the point of impingement shall be located from the pressure port as close to the center as possible without impinging the mounting strap or clamp.

c. The flame shall be applied for 5 minutes.

d. Immediately after removal of the external flame, there shall be no residual flame from the unit under test.

e. After the test and while pressurized, switches shall be examined for evidence of leakage of the media. The switch may not function after this test.

5. PACKAGING

5.1 Packaging. For acquisition purposes, the packaging requirements shall be as specified in the contract or order (see 6.2). When actual packaging of materiel is to be performed by DoD personnel, these personnel need to contact the responsible packaging activity to ascertain requisite packaging requirements. Packaging requirements are maintained by the Inventory Control Point's packaging activity within the Military Department or Defense Agency, or within the Military Department's System Command. packaging data retrieval is available from the managing Military Department's or Defense Agency's automated packaging files, CD-ROM products, or by contacting the responsible packaging activity.

6. NOTES

(This section contains information of general or explanatory nature that may be helpful, but is not mandatory.)

6.1 Intended use. Switches covered by this specification are intended for use in airborne, land, and sea applications. This specification is intended for, but limited to use in selection of pressure switches during system design, individual component design, and mainly for procurement.

6.2 Ordering data. Data specified in procurement documents should be in accordance with 6.2.1 or 6.2.2, as applicable.

6.2.1 For Category I switches. Procurement documents should specify the following:

a. Title, number and date of this specification.

b. Title, number and date of the applicable specification sheet and the complete military part number.

6.2.2 For category II switches. Procurement documents should specify the following:

a. Title, number and date of this specification.

b. Title, number and date of the applicable specification sheet.

c. Military part number of qualified switch.

d. Manufacturer's part number of modified switch.

e. Details of the variations from the specification sheet.

f. Inspection requirements (to verify variations from category I switches) (see 4.5 and notes 1 and 2).

1. Test to be performed (if any)(see 4.5).
2. The laboratory at which inspection is to be performed (see 4.5).
3. Samples and submission of data, if other than that specified (see 4.5.1 and 4.5.2).

NOTE 1: Available manufacturing test data showing compliance may be substituted as meeting these requirements at option of procuring activity.
NOTE 2: A copy of the drawing furnished under e, including the description of the variations from the specification sheet, will be sent to the preparing activity as listed on the individual specification sheet.

6.3 Qualification. With respect to products requiring qualification, awards will be made only for products which are at the time set for opening of bids, qualified for inclusion in the applicable Qualified Products List, whether or not such products have actually been so listed by that date. The attention of the contractor is called to these requirements, and manufacturers are urged to arrange to have the products that they propose to offer to the Federal Government tested for qualification in order that they may be eligible to be awarded contracts for the products covered by this specification. The activity responsible for the qualified products list is the Defense Supply Center, Columbus Ohio (DSCC-VQ), Columbus, OH 43216-5000, and information pertaining to qualification of products may be obtained from test activity.

6.3.1 Copies of SD-6, Provisions Governing Qualifications, may be obtained upon application to Document Automation and Production Service, Building 4D (DPM-DoDSSP), 700 Robbins Avenue, Philadelphia, PA 19111-5094.

6.3.2 Test for switches not qualified. Qualification inspection for pressure switches covered by military specification sheets that are not listed on or approved for listing on QPL-9395 is waived. Until the pressure switches are qualified, first article and acceptance testing will be in accordance with table XIV and inspection of product for delivery.

6.4 Definitions. The following definitions and terminology apply:

6.4.1 Absolute Pressure. Pressure reference to a perfect vacuum (zero pressure) is called absolute pressure. It may be obtained by adding the pressure of reading of a gage to the barometric pressure. For all practical purposes 14.7 lb_f/in^2 is barometric pressure or the pressure of the atmosphere at sea level. Therefore, if the gage reads 10 psi (lb_f/in^2) at seal level, adding 14.7 psi (lb_f/in^2) gives the absolute pressure as 24.7 psi (lb_f/in^2).

6.4.2 Actuation point. The pressure at which the basic switch contacts transfer from their normal state to the opposite condition is known as the actuation point. For clarification, specific details are frequently added, as, "...on increasing (decreasing), pressure...." "...close (open) electrical circuit....," etc.

6.4.3 Ambient pressure. The pressure of the surroundings at the location under discussion is called the ambient pressure. Ambient atmospheric pressure is frequently called barometric pressure.

6.4.4 Burst pressure. The maximum pressure that can be applied without causing rupture or leakage, although permanent structural deformation and calibration shifts may result, is called pressure. It is usually 2-1/2 times the system pressure.

6.4.5 Cycle of operation. A cycle of operation consists of an application of pressure, increasing from zero (psia (lb_f/in^2a) to psig (lb_f/in^2g)), as applicable to system pressure and then decreasing from system pressure to zero, thereby causing the basic switch contacts to transfer from their original state to their

actuated condition and back. During testing a brief hold time at system pressure and at zero pressure is chosen to provide the desired duty cycle.

6.4.6 Deactuation point. The pressure at which the basic switch contacts return to their normal state from their actuated condition is known as the deactuation point. Further details are often added.

6.4.7 Dead band, or actuation value. The difference in pressure between the actuation point and the deactuation point is called the dead band or the actuation value. The terms are synonymous and will both be used. Also, the term “differential spread" or "pressure differential" (sometimes just "differential") are occasionally used but this tends to cause confusion with a differential pressure actuated switch.

6.4.8 Differential pressure. Pressure measured or expressed from some reference other than absolute zero or ambient atmospheric pressure is called differential pressure. Strictly speaking however, all pressures are differential pressures in that some reference pressure is always needed; absolute pressure and gage pressure are special types of differential pressure.

6.4.9 Dynamic Seal. A dynamic seal is any device that elastically deflects to prevent pressure leakage through clearance spaces between engaging parts that may be periodically in motion relative to one another.

6.4.10 Elastomer. An elastomer is a material that can be stretched repeatedly to at least twice its original length and upon immediate release of the stress will return with force to its approximate original length.

6.4.11 Electrical chamber. The internal cavity of a pressure switch that contains the basic electrical switch and associated wiring in known as the electrical chamber.

6.4.12 Gage pressure. Pressure referenced to the surrounding atmosphere (barometric pressure) is called gage pressure. It is the general method of pressure measurement and is the value usually obtained by reading a gage. Pressures are understood to be such, unless otherwise stated. Gage pressure will vary with fluctuations in the barometric pressure.

6.4.13 Hermetic seal. A hermetic seal is one that has been effected by means of fusion of glass or ceramic to metal, or by bonding of metal to metal.

6.4.14 Impulse cycle. An impulse cycle is a cycle of operation in which the pressure is applied as a definite pressure surge. During testing this pressure application is in accordance with the pressure-time requirements.

6.4.15 Major defect. A defect that could result in a failure or that will reduce the usability of the switch for its intended purpose.

6.4.16 Minor defect. A defect that is not likely to reduce the usability of the switch for its intended purpose. It may be a departure from established standards having no significant bearing on the effective use or operation of the switch.

6.4.17 Operating points. The collective term encompassing actuation point and deactuation point and often including the dead band is operating points.

6.4.18 Pressure. Pressure is the force exerted per unit of area over which the force is applied.

6.4.19 Pressure chamber. The internal cavity of a pressure switch intended to receive and contain the variable pressure media during operation is known as the pressure chamber.

VSA INFORMATION SYSTEMS

6.4.20 Pressure pulsation amplitude. The peak-to-peak magnitude, expressed as a percent of nominal steady-state pressure, of the repetitive pressure pulsations superimposed on some nominally steady-state pressure applied to a pressure switch is the pressure pulsation amplitude. During testing pressure pulsations simulate the pump ripple encounter in actual use.

6.4.21 Pressure pulsation frequency. The number of complete cycles per unit of time of a pressure pulsation is known as the pressure pulsation frequency.

6.4.22 Pressure surge. A very rapid change in pressure per unit of time is known as a pressure surge. During testing pressure surges simulate the impulses encountered in actual use.

6.4.23 Pressure switch. A switch designed to be operated by a pressure change is called a pressure-actuated switch, or more simply, a pressure switch. In this specification when the term "switch" is used without a modifier, a pressure (pressure-actuated) switch is meant.

6.4.24 Proof pressure. The maximum pressure that can be repeatedly applied without causing rupture, leakage, or permanent deformation of parts, loss of calibration, or other damage is called proof pressure. It is usually 1-1/2 times the system pressure.

6.4.25 Reference chamber. The initial cavity of a pressure switch intended to receive and contain the reference pressure media during operation is known as the reference chamber.

6.4.26 Reference pressure. All pressure measurements and expressions are relative in the sense that they depend on having some known starting point from which the measurement or expression can be made. The pressure selected as the starting point is termed the reference pressure.

6.4.27 Static seal. A static seal is any device that elastically deflects to prevent pressure leakage through clearance spaces between engaging parts that are not intended to be in motion relative to one another.

6.4.28 System pressure. The maximum pressure that will exist in an assembly under normal working conditions is called system pressure.

6.4.29 Vacuum switch. A pressure switch that has its switching points less than the referenced surrounding ambient pressure.

6.4.30 Variable pressure. Any fluctuating pressure whose instantaneous value is being measured or expressed, or which is used to activate a pressure switch is termed a variable pressure. Its value is given as a certain number of pressure units above or below the reference pressure.

6.5 Subject term (key word) listing.

Sensor
High Temperature
Shock
Altitude
Acceleration
Vacuum
Seal

Custodians:
Army - CR
Navy - EC
Air Force - 11
DLA - CC

Review activities:
Army - AV
Navy - MC, SH
Air Force - 99

Preparing activity:
DLA - CC

(Project 5930-1730)

STANDARDIZATION DOCUMENT IMPROVEMENT PROPOSAL

INSTRUCTIONS

1. The preparing activity must complete blocks 1, 2, 3, and 8. In block 1, both the document number and revision letter should be given.

2. The submitter of this form must complete blocks 4, 5, 6, and 7, and send to preparing activity.

3. The preparing activity must provide a reply within 30 days from receipt of the form.

NOTE: This form may not be used to request copies of documents, nor to request waivers, or clarification of requirements on current contracts. Comments submitted on this form do not constitute or imply authorization to waive any portion of the referenced document(s) or to amend contractual requirements.

I RECOMMEND A CHANGE:	1. DOCUMENT NUMBER MIL-DTL-9395G	2. DOCUMENT DATE (YYYYMMDD) 20010530

3. DOCUMENT TITLE SWITCHES, PRESSURE, (ABSOLUTE, GAGE, AND DIFFERENTIAL), GENERAL SPECIFICATION FOR

4. NATURE OF CHANGE *(Identify paragraph number and include proposed rewrite, if possible. Attach extra sheets as needed.)*

5. REASON FOR RECOMMENDATION

6. SUBMITTER

a. NAME *(Last, First, Middle Initial)*	b. ORGANIZATION	
c. ADDRESS *(Include Zip Code)*	d. TELEPHONE (Include Area Code) (1) Commercial (2) AUTOVON *(if applicable)*	7. DATE SUBMITTED (YYYYMMDD)

8. PREPARING ACTIVITY

a. NAME Defense Supply Center, Columbus ATTN: DSCC/VAC	b. TELEPHONE *Include Area Code)* (1) Commercial (2) AUTOVON
c. ADDRESS *(Include Zip Code)* P.O. Box 3990 Columbus, OH 43216-5000	**IF YOU DO NOT RECEIVE A REPLY WITHIN 45 DAYS, CONTACT:** Defense Standardization Program Office (DLSC-LM) 8725 John J. Kingman road, Suite 2533 Ft. Belvoir, VA 22060-2533 Telephone (703) 767-6888 AUTOVON 427-6888