## REVISIONS

| SYMBOL | DESCRIPTION | DATE | APPROVAL |
|---|---|---|---|
| — | Initial Release | 1/27/94 | |
| A | RN A064 Incorporated | 3/23/94 | |
| B | Incorporated Elmwood Sensors "J" Configuration of 3200 Thermostat; entire document reformatted. | 11/17/97 | |
| C | RN A123 Incorporated. | 11/06/01 | VP |

## SHEET REVISION STATUS

| SH | 1 | 2 | 3 | 4 | 5 | 6 | 7 | 8 | 9 | 10 | 11 | 12 | 13 | 14 | 15 | 16 | 17 | 18 | 19 | 20 |
|---|---|---|---|---|---|---|---|---|---|---|---|---|---|---|---|---|---|---|---|---|
| REV | C | C | B | B | B | B | B | C | | | | | | | | | | | | |
| SH | 21 | 22 | 23 | 24 | 25 | 26 | 27 | 28 | 29 | 30 | 31 | 32 | 33 | 34 | 35 | 36 | 37 | 38 | 39 | 40 |
| REV | | | | | | | | | | | | | | | | | | | | |

| | | |
|---|---|---|
| **ORIGINATOR:**<br>**T. R. Duffy/Unisys** | **DATE**<br>**12/14/93** | **FSC:** |
| **APPROVED:**<br>**S. Archer-Davies/Unisys** | **12/14/93** | **Switch, Thermostatic, (Bimetallic), Subminiature Sealed, Single Pole, Single Throw (SPST), Detail Specification for** |
| **CODE 311 APPROVAL:**<br>**P. J. Jones/GSFC** | | |
| **CODE 311 SUPERVISORY APPROVAL:**<br>**G. Kramer/GSFC** | | |
| **ADDITIONAL APPROVAL:** | | **S-311-641/01** |

**NATIONAL AERONAUTICS AND SPACE ADMINISTRATION**
**GODDARD SPACE FLIGHT CENTER**
**GREENBELT, MARYLAND 20771**

**CAGE CODE: 25306**

GSFC DETAIL SPECIFICATION

SWITCHES, THERMOSTATIC, (BIMETALLIC), SUBMINIATURE, HEREMETICALLY SEALED, SINGLE POLE, SINGLE THROW (SPST)

The requirements for procuring the thermostatic switches described herein shall consist of this specification and the current revision of GSFC S-311-641.

PART NUMBER:

| G311P641/01 | A | -30 | B | 099 | C |
|---|---|---|---|---|---|
| GSFC PREFIX | Configuration | Low Temp. | Contact Action | High Temp. | Set Point Features |

(standard for switches listed in this detail specification).

Configuration: See figure 1.

NOTE: All temperatures are in °F.

Low Temperature: The low temperature operating point (°F) shall be designated by 3 digits. For negative temperatures, the first digit shall be a minus (-).

Contact Action: Operating characteristics of the part.

- A Open on increasing temperature.
- B Open on decreasing temperature.
- C Close on increasing temperature.
- D Close on decreasing temperature.

High Temperature: The high temperature operating point (°F) shall be designated by 3 digits. For negative temperatures, the first digit shall be a minus (-).

Set Point Features: Special features for set points.

- A Set points are min-max.
- B Opening set point is min or max.
  Closing set point is standard tolerance.
- C Closing set point is min or max.
  Opening set point is standard tolerance.
- D Opening set point is ±5°F with 7°F to 18°F differential. Closing set point is min or max possible.
- E Closing set point is ±5°F with 7°F to 18°F differential. Opening set point is min or max possible.
- F Opening set point is standard tolerance.
  Closing set point is standard tolerance.

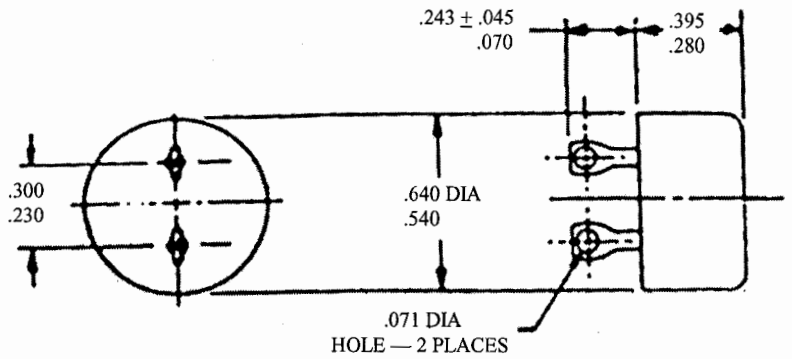


CONFIGURATION A

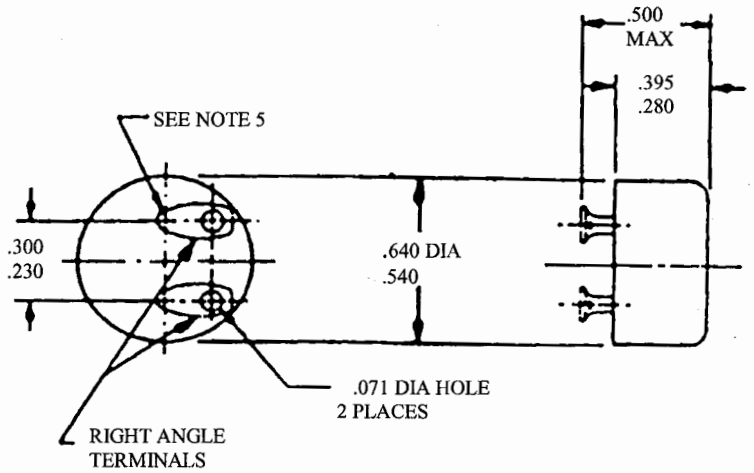


CONFIGURATION B

Figure 1. Dimensions.

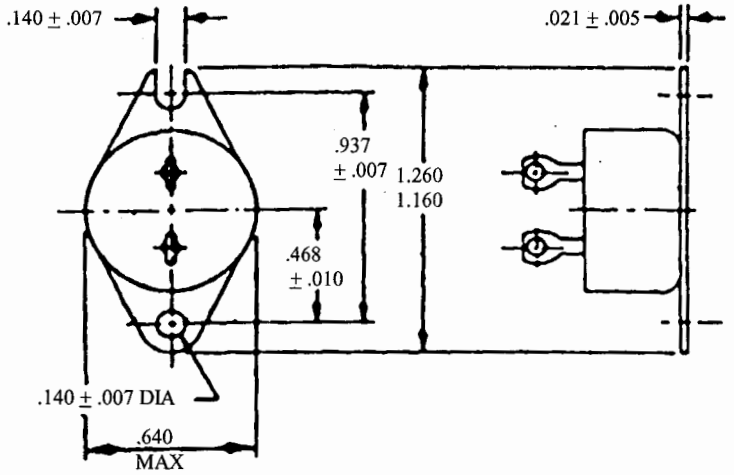


CONFIGURATION C

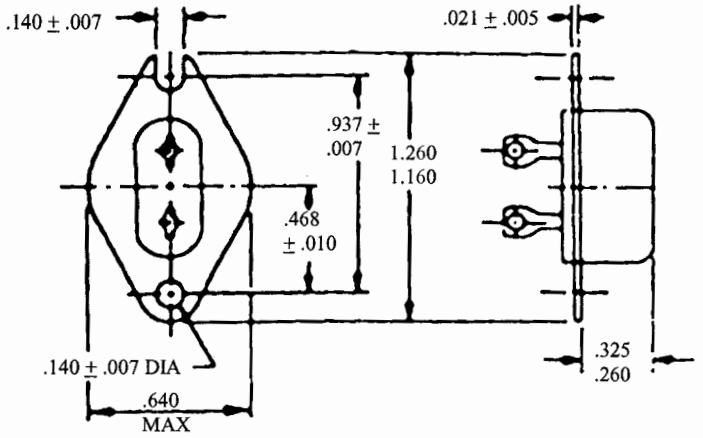


CONFIGURATION D

Figure 1. Dimensions. (continued)

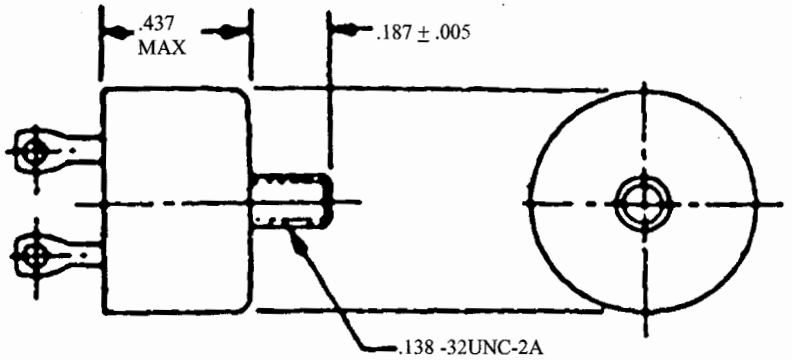


CONFIGURATION E

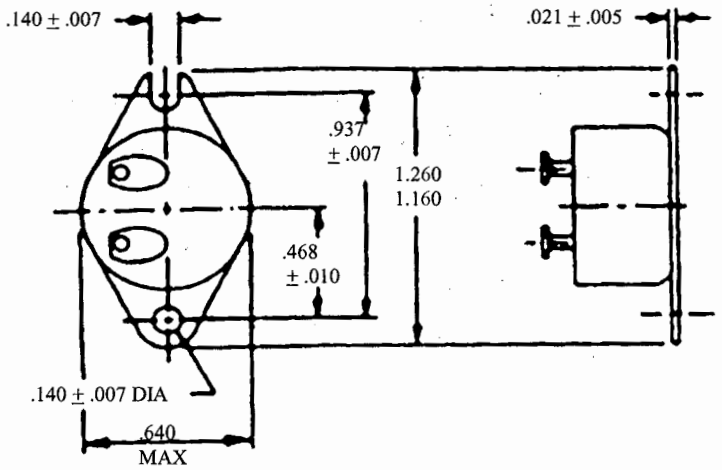


CONFIGURATION F

Figure 1. Dimensions. (continued)

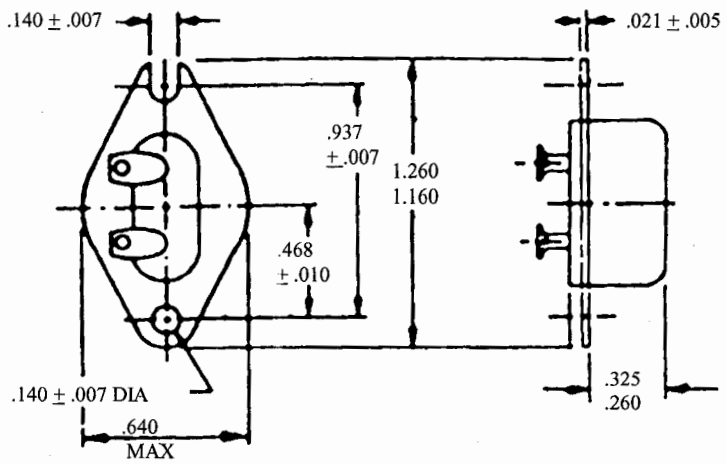


CONFIGURATION G

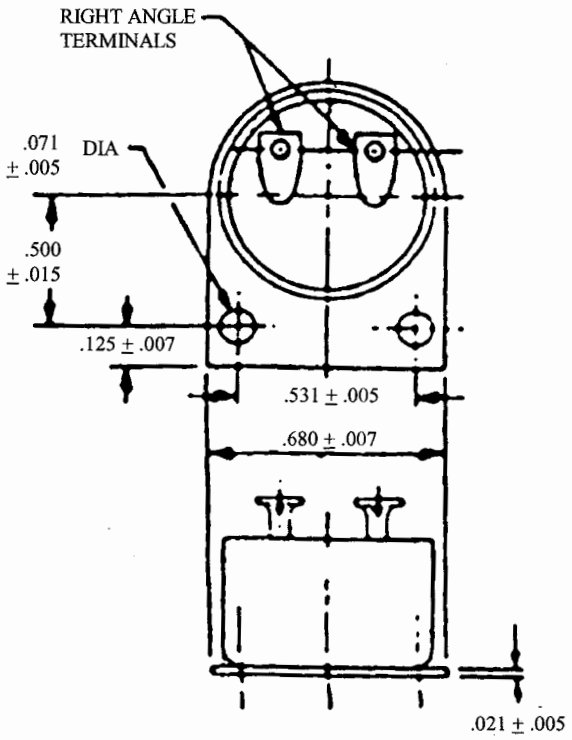


CONFIGURATION H

Figure 1. Dimensions. (continued)

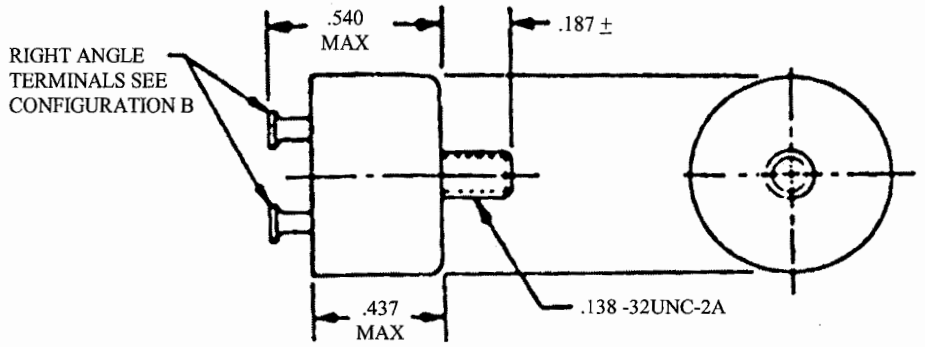


CONFIGURATION I

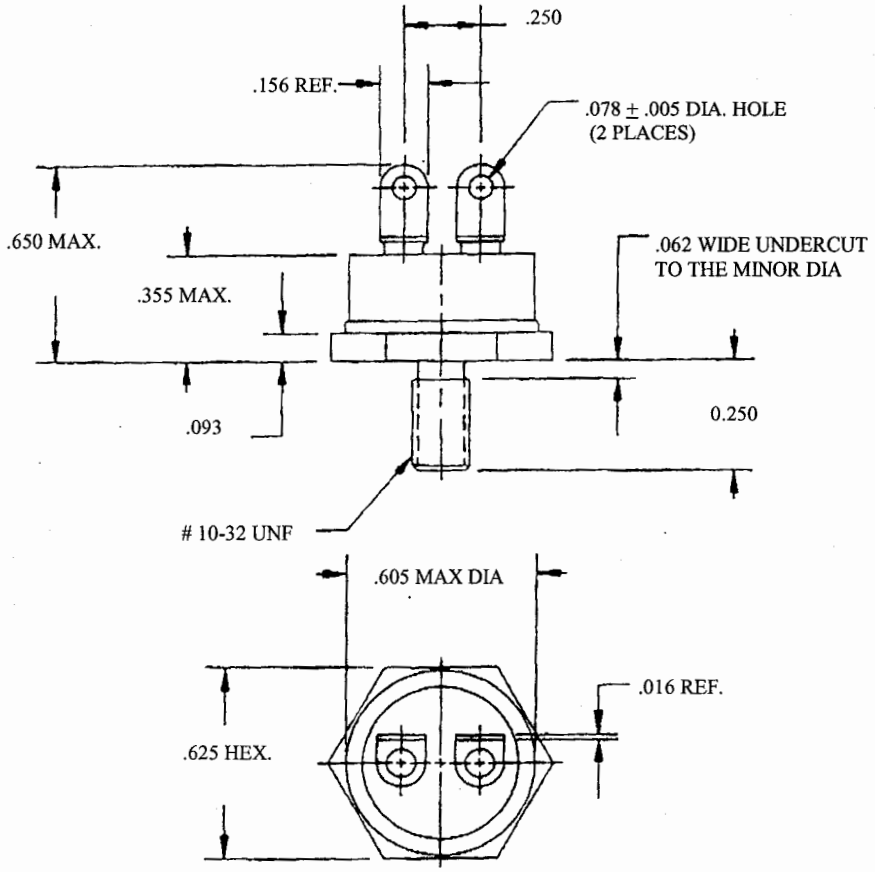


CONFIGURATION J

Figure 1. Dimensions. (continued)

NOTES:

1. Dimensions are in inches.
2. Unless otherwise specified, tolerance is ± .015.
3. Exact shape of switch and terminals are optional provided dimensions specified are not exceeded.
4. Configuration C, D and E use the basic switches of configuration A. Configuration F, G and H use the basic switches of configuration B.
5. This dimension not to exceed extended envelope of the switch.

REQUIREMENTS:

Dimensions and configuration: See figure 1.

Operating temperature range: -65°F to 500°F.

Tolerance: Standard tolerance is ±6°F.

Mounting: See figure 1.

Weight: Not to exceed .025 pound.

Contact ratings: See table I

Contact resistance: 25 milliohms maximum.

Classification: Type I, Class 4, except 80,000 feet altitude, per MIL-S-24236.

TESTING:

Qualification and testing per GSFC S-311-641 with Vibration, PIND and Millipore Cleaning and Inspection required.

| Load | Altitude | | | Endurance (cycles) |
|---|---|---|---|---|
| | Sea Level | | 80,000 feet | |
| | 28 V | 115 V , 60 Hz | 28 V | |
| | amperes | amperes | amperes | |
| Resistive | 5.0 | 2.0 | 5.0 | 100,000 |
| Inductive | 2.5 | 1.0 | 2.5 | 100,000 |
| Lamp | 1.0 | 0.5 | 1.0 | 100,000 |

Custodian: Goddard Space Flight Center
Greenbelt, MD 20771
Attn: Document Administrator Code 562