1. DISTRIBUTION	NAME	CODE	NAME	CODE
311 FORM 1000	J. LOHR	311		
	M. LYDARD	239		
	D. BERGMAN	738		

NASA

OFFICE OF FLIGHT ASSURANCE
PARTS BRANCH

2. RN NUMBER A063

SHEET 1 OF 2

3. SPECIFICATION NUMBER S-311-P-767 4. REVISION —

5. ACTIONS: REVISE PARAGRAPHS 3.11, 4.13, AND FIGURE 1 AS FOLLOWS:

WAS

3.11 Thermal_time_constant. When tested as specified in 4.15, the thermal time constant in still air shall be 4.5 seconds maximum.

IS

3.11 Thermal_time_constant. When tested as specified in 4.15, the thermal time constant in still air shall be 4.5 seconds maximum for style A and 9 seconds for style B.

ORIGINAL

6. REASON: CONFORMANCE WITH MANUFACTURER CAPABILITIES

7. ORIGINATOR	EXT.	DATE
J. Lohr	9807	10/12/93

8. SUPERVISOR	DATE
R. Gunn	10/12/93

9. SPECIFICATION TITLE
THERMISTOR, HERMETIC (ALLOY SEALED), ...

10. SPECIFICATION NUMBER
S-311-P-767

11. RN NUMBER	12. REV. TO
A063	A

GSFC

Goddard Space Flight Center
Greenbelt Maryland
20771

13. APPROVALS:

A. PARTS BRANCH	Bitel Jones	DATE 10/12/93
B. PARTS BRANCH SUPERVISOR	R. Gunn	DATE 10/12/93
C. ADDITIONAL APPROVAL		DATE

14. VAULT ADMINISTRATOR	15. REL DATE
Rose M. Gastone	10/12/93

5. ACTIONS

WAS

4.13 High temperature storage (see 3.9). Thermistors shall be tested in accordance with MIL-T-23648 except the high temperature shall be within + 0.1K of the maximum operating temperature specified in Table 1.

IS

4.13 High temperature storage (see 3.9). Thermistors shall be tested in accordance with MIL-T-23648 except the minimum high temperature shall be the maximum operating temperature specified in Table 1.

WAS

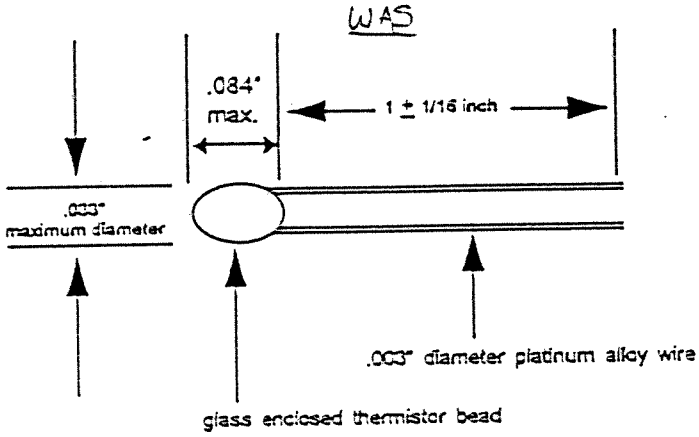

Figure 1. Physical configuration for Style A.

IS

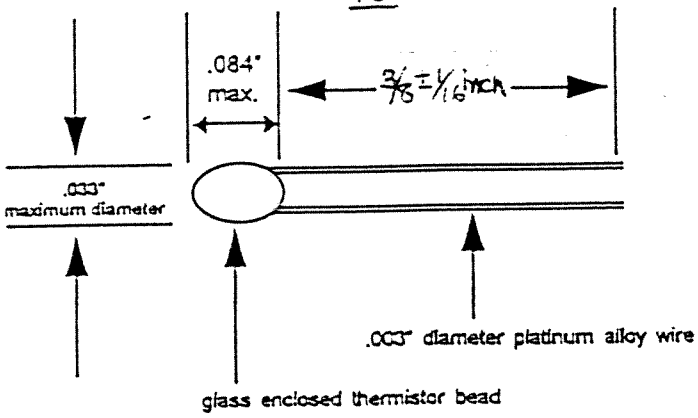

Figure 1. Physical configuration for Style A.

Master

REVISIONS			
SYMBOL	DESCRIPTION	DATE	APPROVAL
—	INITIAL RELEASE	5/23/93	

SHEET REVISION STATUS

SH	1	2	3	4	5	6	7	8	9	10	11	12	13	14	15	16	17	18	19	20
REV	--	--	--	--	--	--	--	--	--	--	--	--	--	--	--					
SH	21	22	23	24	25	26	27	28	29	30	31	32	33	34	35	36	37	38	39	40
REV																				

ORIGINATOR T.J. Perry/Unisys	DATE 8/17/93	FSC: 5905
APPROVED S. Archer-Davies/Unisys	8/17/93	Thermistor, Hermetically Sealed, Cryogenic, Negative Temperature Coefficient, Specification for
CODE 311 APPROVAL J. M. Lohr/GSFC	8/19/93	
CODE 311 SUPERVISORY APVL R. L. Chinnapongse/GSFC	8/23/93	
ADDITIONAL APPROVAL D. I. Bergman/GSFC	8/13/93	S-311-P-767

NATIONAL AERONAUTICS AND SPACE ADMINISTRATION
GODDARD SPACE FLIGHT CENTER
GREENBELT, MARYLAND 20771

CAGE CODE: 25306

1. SCOPE

1.1 Scope. This specification covers the procurement requirements for hermetically sealed, high reliability thermistors (thermally sensitive resistors) with insulated or uninsulated leads. These parts are intended for temperature compensation, control, or measurement at cryogenic temperatures during extended flight in space. Thermistors manufactured to this specification exhibit a negative temperature coefficient; i.e., the zero-power resistance decreases with an increase in temperature.

1.2 Goddard part number. Parts procured in complete compliance with the requirements of this specification shall be identified by a Goddard part number of the following form.

311P767	- A	8003	K
GSFC PREFIX	Style (1.2.2)	Zero-power Resistance (1.2.3)	Tolerance (1.2.4)

1.2.1 Dash number. The dash number identifies the style, zero-power resistance, and tolerance.

1.2.2 Style. The style shall be identified by the first letter of the dash number and identifies thermistors of a type and size specified in Table I.

Table I. Style.

Characteristic	Style A	Style B
Zero-power resistance temp.	77K	170K
Calibration temp. range	65 - 190K	165 - 300K
Calibration curve	Table III	Table III
Max. operating temperature	343K	343K
Dissipation constant	0.28 mw/K	0.28 mw/K
Thermal time constant	4.5 sec max.	4.5 sec max.
Physical configuration	Figure 1	Figure 2

1.2.3 Zero-power resistance. The nominal zero-power resistance value is specified by four digits in the second, third, fourth and fifth positions of the dash number. The first three digits represent significant figures; the last digit specifies the number of zeroes to follow.

example: 8003 = 800 kilohm

1.2.4 Tolerance. The zero-power resistance tolerance is identified by a single letter in the sixth position of the dash number. This letter signifies the tolerance in accordance with Table II.

Table II. Zero-power resistance tolerance.

Letter	Resistance Tolerance
F	± 1%
G	± 2%
J	± 5%
K	± 10%
M	± 20%

1.3 Calibration curve. Thermistors procured to this specification shall be calibrated in accordance with Table III.

Table III. Calibration curve.

Style	Temperature Range (K)	Increments (K)	Accuracy (K)
A	65 - 90 90 - 190	0.01 0.25	± 0.1 ± 0.1
B	165 - 175 175 - 300	0.01 1	± 0.1 ± 0.1

1.4 Performance characteristics. The performance of thermistors procured to this specification is specified in Table IV.

Table IV. Performance characteristics.

Test	Style A	Style B
Insulation resistance (see 3.7)	100 MΩ (minimum)	100 MΩ (minimum)
Low temperature storage (see 3.8)	ΔR ± 0.5%	ΔR ± 0.5%
High temperature storage (see 3.9)	ΔR ± 0.35%	ΔR ± 0.35%
Terminal strength (see 3.12)	ΔR ± 0.5%	ΔR ± 0.5%
Thermal shock (see 3.13)	ΔR ± 0.35%	ΔR ± 0.35%
Load life (see 3.14)	ΔR ± 5%	ΔR ± 5%
High temperature exposure (see 3.15)	ΔR ± 0.35% (100 hrs.) ΔR ± 0.5% (1000 hrs.)	ΔR ± 0.35% (100 hrs.) ΔR ± 0.5% (1000 hrs.)
Vibration, high frequency (see 3.16)	ΔR ± 0.35%	ΔR ± 0.35%
Shock, specified pulse (see 3.17)	ΔR ± 0.35%	ΔR ± 0.35%

1.5 Resistance stability. The manufacturer shall formulate, cure, and stabilize the resistive batch material to meet the design requirement of long term drift over 14 years resulting in equivalent temperature calibration error no greater than 0.2K.

2. APPLICABLE DOCUMENTS

2.1 Applicable documents. The following documents, of the issue in effect on the date of the invitation for bids or request

for proposal, form a part of this specification to the extent specified herein:

SPECIFICATIONS

J-W-1177	Wire, Magnet, Electrical, General Specification
MIL-T-23648	Thermistor, (Thermally Sensitive Resistor), Insulated, General Specification for
MIL-I-25135	Inspection Materials, Penetrant
MIL-I-45208	Inspection Systems Requirements

STANDARDS

MIL-STD-410	Nondestructive Testing Personnel Qualification and Certification
MIL-STD-6866	Inspection, Liquid Penetrant

OTHER PUBLICATIONS

ASTM E595	Total Mass Loss and Collected Volatile Condensable Materials from Outgassing in a Vacuum Environment, Standard Test Method for
NASA RP1124	Outgassing Data for Selecting Spacecraft Materials

2.2 Order of precedence. In the event of any conflict between the text of this specification and the references cited herein, the text of this specification shall have precedence. However, nothing in this text or detail specification shall supersede applicable laws and regulations unless a specific exemption has been obtained.

2.3 Copies of documents. Copies of federal and military documents can be obtained from the Standardization Document Order Desk, 700 Robbins Avenue, Building #4-Section D, Philadelphia, PA 19111-5094. Copies of ASTM publications are available from the American Society for Testing and Materials, 1916 Race Street, Philadelphia, PA 19103.

3. REQUIREMENTS

3.1 General requirements. Requirements shall be in accordance with this specification and the latest issuance of MIL-T-23648 except as modified herein.

3.2 Qualification. Thermistors furnished to this specification shall be product which has been granted qualification approval by NASA/GSFC. Qualification approval shall be based on the following criteria.

3.2.1 Design and source approval. Prior to qualification, the manufacturer's facility shall be subjected to survey at the option of GSFC, by the Office of Flight Assurance, GSFC. Compliance with MIL-I-45208 is required. In addition, the history and detailed engineering of the specific thermistor design will be reviewed, as will the documented manufacturing and quality control procedures. Only those sources approved in the design and source approval phase shall be eligible for qualification or award of contract under this specification. Source approval and design approval do not constitute part qualification or an equivalent thereof.

3.2.2 Part qualification. Thermistor product granted qualification shall be that which has passed the qualification requirement of this specification. This requirement may be satisfied by passing the qualification inspection (see 4.4).

3.3 Materials.

3.3.1 Materials. Materials shall be as specified herein. However, when a definite material is not specified, a material shall be used which will enable the thermistors to meet the performance requirement of this specification. Acceptance or approval of any constituent material shall not be construed as a guaranty of the acceptance of finished product.

3.3.2 Thermal outgassing. When tested as specified in 4.7, materials must meet outgassing limits of 1.0% total mass loss (TML) maximum and 0.1% collected volatile condensable materials (CVCM) maximum. Acceptable materials that meet these requirements are listed in NASA Reference Publication 1124, Revision 2, *Outgassing Data for Selecting Spacecraft Materials*.

3.4 Design and construction. Thermistors shall be of the design, construction and dimensions depicted in Figures 1 and 2.

3.4.1 Thermistor bead. The thermistor bead shall be hermetically sealed in a glass enclosure.

3.4.2 Extension lead wires. Extension lead wires shall be of a size and type specified in J-W-1177. Extension lead wires shall be welded to the thermistor lead wires.

3.4.3 Backsleeve. Thermistors constructed with extension leads shall contain a backsleeve to provide additional support to the termination area. The backsleeve shall cover both the weld junctions and the glass enclosed thermistor wires as depicted in Figure 2. The backsleeve shall extend as far as possible along the axis of the glass enclosed thermistor bead without affecting the thermal time constant or the ability to mount the thermistor in its intended manner.

3.5 Zero-power resistance. When measured as specified in 4.9, each thermistor shall have a zero-power resistance value within the tolerance of the nominal resistance value as specified by the part number.

3.6 Calibration. When calibrated in accordance with 4.10, the temperature versus resistance measurements shall meet the requirements in Table III. A computer printout and disk copy shall accompany each thermistor stating temperature versus resistance at the specified intervals and accuracy. Each printout shall identify the thermistor in accordance with the requirements of 3.21.1.

3.7 Insulation resistance. When tested as specified in 4.11, the insulation resistance shall meet the requirement in Table IV.

3.8 Low temperature storage. When tested as specified in 4.12, the maximum allowable change in 298K zero-power resistance shall be ± 0.5 percent.

3.9 High temperature storage. When tested as specified in 4.13, the maximum allowable change in 298K zero-power resistance shall be ± 0.35 percent.

3.10 Dissipation constant. When tested as specified in 4.14, the dissipation constant in still air shall be 0.28 milliwatts per Kelvin minimum.

3.11 Thermal time constant. When tested as specified in 4.15, the thermal time constant in still air shall be 4.5 seconds maximum.

3.12 Terminal strength. When tested as specified in 4.16 with an applied pull of 15 grams, the change in 298K zero-power resistance shall not exceed ± 0.5 percent.

3.13 Thermal shock. When tested as specified in 4.17, the maximum allowable change in 298K zero-power resistance shall be ± 0.35 percent.

3.14 Load life. When tested as specified in 4.18, the maximum allowable change in 298K zero-power resistance shall be ± 5 percent.

3.15 High temperature exposure. When tested as specified in 4.19, the maximum allowable change in 298K zero-power resistance shall be ± 0.35 percent after 100 hours, and ± 0.5 percent after 1000 hours.

3.16 Vibration, high frequency. When tested as specified in 4.20, the maximum allowable change in 298K zero-power resistance shall be ± 0.35 percent.

3.17 Shock, specified pulse. When tested as specified in 4.21, the maximum allowable change in 298K zero-power resistance shall be ± 0.35 percent.

3.18 Seal. When tested as specified in 4.22, there shall be no evidence of cracks or sealing failures affecting the hermeticity of the thermistor.

3.19 Marking.

3.19.1 Part. Each thermistor shall be identified with the GSFC part number and a unique serial number. The manufacturer shall maintain records to preclude any duplication of serial numbers for all thermistors shipped to this specification.

3.19.2 Container. Each individual thermistor container and the shipping container shall be marked with the following information: manufacturer's name or symbol; cage code; GSFC part number, and date code.

3.19.2.1 Date code. The manufacturer shall assign a date code that can be used to trace all material, production and inspection records.

3.20 Workmanship. Thermistors shall be processed in such a manner as to be uniform in quality and free of any defects affecting performance or life.

4. QUALITY ASSURANCE PROVISIONS

4.1 Responsibility for inspection. The manufacturer is responsible for the performance of all inspection requirements, as specified herein, using his own or any other suitable facility acceptable to Goddard Space Flight Center. Upon receipt of product, Goddard reserves the right to perform any of the inspections set forth in the specification where such inspections are deemed necessary to verify conformance to prescribed requirements.

4.2 Classification of inspection. Inspection requirements specified herein are classified as follows:

a. Qualification Inspection (see 4.4)
b. Quality Conformance Inspection (see 4.5).

4.3 Inspection conditions. Unless otherwise specified herein, the thermistors shall be manufactured and tested in accordance with the quality assurance provisions of MIL-T-23648.

4.4 Qualification inspection (see 4.2). Qualification inspection shall be performed by the manufacturer on sample units produced with equipment, processes and procedures normally used in production. Qualification shall be performed in accordance with Table V herein.

4.4.1 Sample size. The number of sample units submitted for qualification inspection shall be 25.

4.4.2 Test routine. Sample units shall be subjected to the qualification inspection specified in Table V in the order shown. All sample units shall be subjected to the inspections of Group 1. The samples shall then be subdivided as specified in Table V and subjected to the inspections of Groups 2 through 6. All sample units shall then be subjected to the inspections of Group 7. Group 8 inspection is not necessary if the organic materials used to fabricate the thermistors are listed as acceptable in NASA Reference Publication 1124.

4.4.3 Qualification failures. Failures in excess of those allowed in Table V shall be cause for refusal to grant qualification.

4.4.4 Inspection report. Qualification test data and the qualification test samples shall be submitted to the following activity:

NASA/GSFC
Greenbelt, MD 20771
Attn: QPLD Administrator
Code 311

4.5 Quality conformance inspection (see 4.2). Quality Conformance Inspection (QCI) shall be performed on all product furnished to this specification.

4.5.1 Inspection of product for delivery. Inspection of product for delivery shall consist of QCI per Table VI to be performed in the order shown.

Table V. - Qualification inspection.

Inspection	Requirement Paragraph	Method Paragraph	Number of Sample Units	Number of Defects Allowed 1/
Group 1				
Seal	3.18	4.22		2
Visual and mechanical	3.3.1, 3.4 3.19, 3.20	4.8	all samples	
Zero power resistance	3.5	4.9		0
Calibration	3.6	4.10		
Group 2				
Insulation resistance	3.7	4.11		
Low temp storage	3.8	4.12		
High temp storage	3.9	4.13	5	1
Dissipation constant	3.10	4.14		
Thermal time constant	3.11	4.15		
Group 3				
Terminal strength	3.12	4.16	5	1
Thermal shock	3.13	4.17		
Group 4				
Load Life	3.14	4.18	5	1
Group 5				
High temp exposure	3.15	4.19	5	1
Group 6				
Vibration	3.16	4.20	5	1
Shock	3.17	4.21		
Group 7				
Calibration	3.6	4.10	samples	0
Group 8				
Thermal outgassing	3.3.2	4.7	3 2/ Any Value	0

1/ The aggregate total shall not exceed 2 defective units for the qualification samples except for the seal inspection. The total number of seal failures shall not exceed 2.

2/ When required (see 3.3.2).

Table VI. Quality Conformance Inspection (QCI).

Examination or Test (100% Inspection) (see 4.5.3)	Requirement	Method
Seal	3.18	4.22
Visual & mechanical	3.3.1, 3.4 3.19, 3.20	4.8
Zero-power resistance	3.5	4.9
Insulation resistance	3.7	4.11
High temp. storage	3.9	4.13
Thermal shock	3.13	4.17
Zero power resistance	3.5	4.9
Visual & mechanical	3.3.1, 3.4 3.19, 3.20	4.8
Calibration 1/	3.6	4.10

1/ Applicable only to thermistors passing QCI from acceptable inspection lots (see 4.5.2 and 4.5.4).

4.5.2 Inspection lot. An inspection lot shall consist of all thermistor product of the same style and resistance value, manufactured at essentially the same time under the same manufacturing process conditions, and identified by a common date code (see 3.19.2.1).

4.5.3 QCI failures. Thermistors that do not pass QCI shall be removed from the inspection lot and shall not be furnished to this specification.

4.5.4 Lot rejection. Inspection lots having more than 10 percent total rejects, or two thermistors, whichever is greater, that are rejected due to exceeding specified resistance changes, shall not be furnished to this specification.

4.6 Retention of qualification. As a basis for retention of qualification, the manufacturer will be requested to furnish a summary of QCI results annually. The test summary shall be submitted to the activity specified in 4.4.4.

4.7 Thermal outgassing (see 3.3.2). Thermistors shall be tested in accordance with ASTM E595.

4.8 Visual and mechanical inspection. Thermistors shall be examined to verify that the design, construction, physical dimensions, marking, and workmanship comply with this specification.

4.9 Zero-power resistance (see 3.5). Thermistors shall be tested in accordance with MIL-T-23648 except as modified herein.

a. Measure the zero-power resistance at the temperature specified in Table I.

4.10 Calibration (see 3.6). Calibration shall be performed in a precision constant temperature bath. The temperature of the bath medium shall be maintained to within ± 0.01K, and measured resistance values shall be accurate to within ± 0.05 percent. The manufacturer shall select a sufficient number of calibration points to meet the calibration curve requirements in Table III. All calibrations shall be performed with equipment traceable to the N.I.S.T.

4.11 Insulation resistance (see 3.7). Thermistors shall be tested in accordance with MIL-T-23648.

4.12 Low temperature storage (see 3.8). Thermistors shall be tested in accordance with MIL-T-23648 except the low temperature shall be the zero-power resistance temperature listed in Table I.

4.13 High temperature storage (see 3.9). Thermistors shall be tested in accordance with MIL-T-23648 except the high temperature shall be within ± 0.1K of the maximum operating temperature specified in Table 1.

4.14 Dissipation constant (see 3.10). Thermistors shall be tested in accordance with MIL-T-23648 except as modified herein.

a. The zero-power resistance temperatures shall be 298K and 343K.

4.15 Thermal time constant (see 3.11). Thermistors shall be tested in accordance with MIL-T-23648 except as modified herein.

a. The zero-power resistance temperatures shall be 315K and 343K.

4.16 Terminal strength (see 3.12). Thermistors shall be tested in accordance with MIL-T-23648.

4.17 Thermal shock (see 3.13). Thermistors shall be tested in accordance with MIL-T-23648 except as modified herein:

a. Test Condition A-1 except the minimum temperature shall be 77K and the maximum temperature shall be 343K.

4.18 Load life (see 3.14). Thermistors shall be tested in accordance with MIL-T-23648.

4.19 High temperature exposure (see 3.15). Thermistors shall be tested in accordance with MIL-T-23648.

4.20 Vibration, high frequency (see 3.16). Thermistors shall be tested in accordance with MIL-T-23648.

4.21 Shock, specified pulse (see 3.17). Thermistors shall be tested in accordance with MIL-T-23648.

4.22 Seal (see 3.18). Testing shall be performed in accordance with MIL-STD-6866 except as modified herein:

a. The certification requirements of para. 4.3 are waived.

b. Penetrant materials shall conform with MIL-I-25135.

c. The penetrant system shall be Type I (fluorescent dye). Method, sensitivity, and solvent class shall be determined by the manufacturer.

5. PREPARATION FOR DELIVERY

5.1 Preparation for delivery. Preparation for delivery shall be as specified in paragraph 5 of MIL-T-23468.

6 NOTES

6.1 WARNING. Thermistors procured to this specification must not be exposed to or operated at temperatures exceeding the maximum temperature rating: performance will be permanently impaired.

6.2 Data address. When supplemental data, reports, or information requests are to be transmitted to GSFC, the address listed in 4.4.4 should be used.

6.3 Ordering data. Acquisition documents should specify the following:

a. Number, title, and date of this specification
b. Goddard Part Number
c. Quantity

6.4 Qualification provisions. With respect to product requiring qualification, awards will be made only for product which have been tested and approved by GSFC before the time for opening of bids. The attention of the suppliers is called to the following requirement: manufacturers should arrange to have qualification tests made on product which they propose to offer to GSFC to become eligible for awards of contracts or orders for product covered by this specification. The manufacturer shall bear the cost of qualification inspection to this specification. Information pertaining to qualification of product may be obtained from the activity whose address is listed in 4.4.1.

6.5 NOTICE. When GSFC drawings, specifications, or other data are sent for any purpose other than in connection with a definitely related GSFC procurement operation, the United States Government thereby incurs no responsibility nor any obligation whatsoever. The fact that GSFC might have formulated, furnished or in any way supplied the said drawings, specifications, or other data is not to be regarded by implication or otherwise as in any manner licensing the holder or any person or corporation, or conveying any right or permission to manufacture, use, or sell any patented invention that may in any way be related thereto.

Custodian:

Code 311.2
Goddard Space Flight Center
Greenbelt, MD 20771

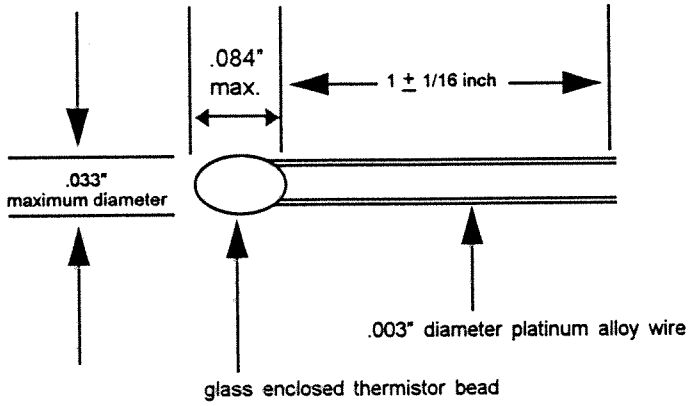

Figure 1. Physical configuration for Style A.

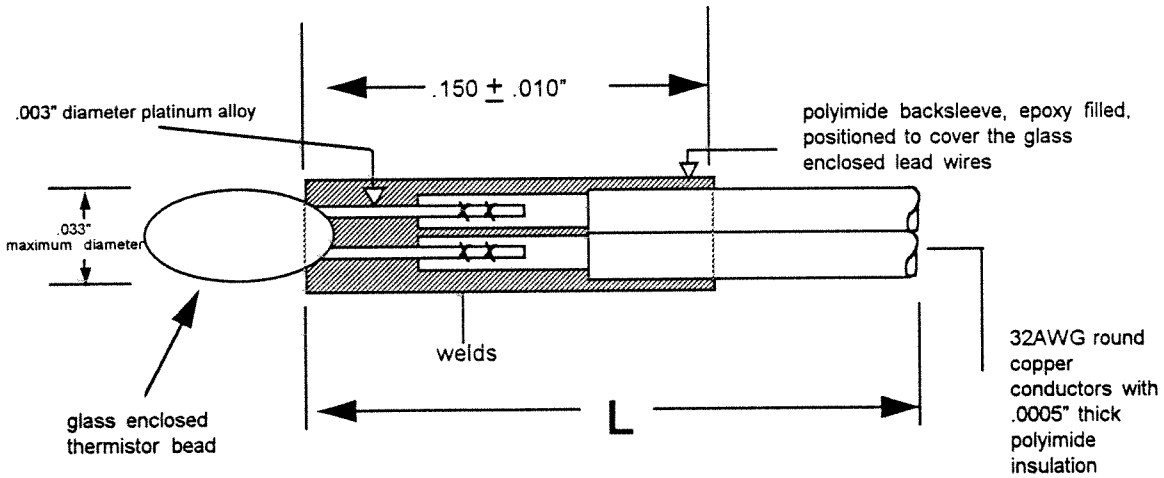

L = 36 ± 1/8" lead length (unstripped)

Figure 2. Physical configuration for Style B.