25 May 1999

Pico Technology, Inc.

SPICE Modeling the Electrical Interconnect of the Stackable Package

1. Basic Connectivity of the Stackable Package

It is presumed that the reader has the mechanical drawings of the package available to him and can refer to them as needed in order to follow the development of an electrical description of the package to be undertaken in this document.

Fig. 1 shows the basic connectivity of the signal traces. There are 360 nets in each package. Each net has 3 ports, one at the inside for a bond wire connection to a Picostrate or other substrate and two at the outside for fuzz button connections to either a systems board or to other packages within the same stack.

All corresponding nets of all packages within a stack are bussed vertically together. A bus could potentially be cut into several partial busses within the same channel by eliminating selected fuzz buttons at desired locations. In other words, the fuzz button carriers would have to be programmed to match the application. Though possible in principle, the needed process has not yet been implemented.

It is not possible to make horizontal connections between nets of one and the same package or between not corresponding nets of different packages. However, such connections could be provided within the systems board.

2. Distinct Elements

Though corresponding nets of different packages are equal to each other, a given net within one and the same package is different from almost all other nets. However, the structural complexity of the nets can be reduced to a manageable level by breaking them down into distinct elements (Fig. 2) which are equal to each other.

All nets consist of vertical and horizontal sections. The name of any section shall include a 1 for vertical or a 2 for horizontal as a first subscript (simulation programs permit only numerical subscripts).

The vertical connections can first be divided further into three types by their horizontal location, namely, the outer, the center, and the inner location. As a whole, a vertical connection shall be called vertical wire 1, vertical wire 2, and vertical wire 3. This numerator shall be added to any section name as a second subscript.

A vertical wire can next be divided into an upper (third subscript 1) and a lower (third subscript 2) section. What makes upper and lower sections unique is that the wire travels in section 2 through openings in the various voltage and ground planes (vias through ceramic plates CP1 through CP9), while it travels in section 1 (vias through ceramic plates CP10 through CP13) through an environment with plating stubs. Furthermore, the connection point between sections 1 and 2 is conveniently identical to the connection between the vertical and the horizontal wire.

The fuzz buttons could be added to the vertical wires as a third section (below section 2) with a third subscript 3 in their name. However, it is anticipated that they can well be approximated as resistors and they are therefore shown as such.

Among the horizontal connections, one can also differentiate between three types. The first refers to a trace running in signal layer 2 and connecting to a vertical Wire 1. The second refers to a trace running in signal layer 1 and connecting to a vertical Wire 2. The third refers to a trace running in signal layer 2 and connecting to a vertical Wire 3. These three types shall be called horizontal wire 1, horizontal wire 2, and horizontal wire 3. The type number shall be added to the wire name as a second su21bscript, counted in the same sequence which was used in their description.

Fortunately, a vertical wire 1 connects always to a horizontal wire 1 and never to a horizontal wire 2 or 3. Correspondingly, Wires 2 and 3 are also restricted to be connected only to another wire of their own type.

The horizontal wires can also to be divided into sections. Tracing the wires from the package outside in reveals a natural first section for wires 1, which is defined by the area containing only wires 1. A second section can be defined for wires 1 and 2 by the area which contains only Wires 1 and 2, while a third section can be defined for all three wire types by the area which contains all three wire types. So, horizontal wire 1 features all three sections, wire 2 only sections 2 and 3, and wire 3 only section 3.

The bond wires making the connections from the package to the substrate could be added as fourth sections to the horizontal wires and be marked accordingly with a fourth subscript. However, it is anticipated that they can well be approximated as an inductor, and they are therefore shown as such.

We have now 12 different wire sections types, which feature equal properties for all wire sections which belong to the same section type though with one singular exception:

The section length of horizontal section 3 varies to some degree as one moves around the package. This deviation from the norm will be addressed later.

Note that Fig. 2 is drawn as a circuit schematic in which the rectangles denote the sections discussed above and in which the lines connecting the section as components are ideal lines without electrical properties.

3. A Simplified Transmission Line Model Excluding Cross-Talk

The package has been designed such that all horizontal traces ride over a ground plane and that all vertical via columns are more or less surrounded by ground columns. That establishes within the limit of an upper working frequency the basis for TEM transmission lines, which are amenable to SPICE simulation.

TEM transmission lines are by definition homogeneous in the longitudinal direction. This is not quite true for the package under consideration. The horizontal wires "wiggle" around the vias, and the vertical lines go through transversal windows in the ground and power planes. However, the period of these distortions is so small (under 1mm) that they "homogenize" for all transition times above 100 ps or all frequencies below 3 GHz if one takes as a criterion a ratio of propagation delay to transition time of 1:10.

A signal wire interacts not only with its surrounding ground wires and ground planes but also with other signal wires, which is the cause for active and passive to cross-talk. However, it will prove useful to start with a very simple model which ignores cross-talk. In this case, all sections defined in Fig. 2 become simple transmission lines as shown in Fig. 3. This model is directly useable if one is less concerned with the cross-talk created within the package and more with the signal transmission through the package.

Since the straight transmission line delay of the buttons is estimated to be about 7 ps, they indeed be approximated as discrete resistors. The bond wires whose straight transmission line delay would be similarly short, whose resistance would be low, and whose characteristic impedance would relatively high can indeed be approximated as inductors. To keep things as simple as possible, the resistors and inductors will not be carried forward and into in Fig. 3 and the subsequent models but may have to be added later for a complete systems analysis.

The parameters which are needed to quantify the simplified transmission line model of Fig. 3 are listed in Table 1. Resistance, inductance, conductance, and capacitance are the base parameters usually required for simulation programs. Characteristic impedance, delay, and attenuation comprise an alternate set of parameters, which may be more intuitive. The two sets can always be translated into each other.

4. A Transmission Line Model Including Cross-Talk

If one can not ignore cross-talk or the actual potential on other signal wires surrounding the signal wire under primary consideration, the field of parallel signal wires becomes a multi-conductor transmission line.

A multi-conductor transmission line is not described by just one characteristic impedance but rather by a set of partial characteristic impedances, one for each pair of signal wires. Because this leads to an unmanageably large number of partial characteristic impedances, we have to find ways to simplify things.

There is a certain amount of coupling between a signal wire and its next signal wire neighbor. This coupling, which must still be quantified, can be assumed to have been made relatively small by design because otherwise the cross-talk would become unacceptably high. The coupling between a signal wire and other signal wires beyond the next neighbor are decreasing fractions of the coupling to the next neighbor. If the latter is already small, then the former is so small that it can be ignored. Therefore, only next neighbors shall be considered for the development of the multi-conductor transmission line model.

With this simplification, the input to the multi-conductor transmission line looks as shown in Fig. 4.1. The circles denote the conductors, the cross-hatched rectangle the ground system, and the small rectangles the partial characteristic impedances. The wire stubs emanating from the conductors symbolize the removed partial characteristic impedances.

Even with the previous simplification, the model is still too complex. If one looks at only one active wire at a time, then one can describe its only and its cross-talk via the truncated configuration of Fig. 4.2. The multi-conductor transmission line has been reduced to a symmetrical three-conductor transmission line with the center conductor as the active conductor. The interaction of multiple active conductors can be derived later by superimposing the effects of a multiplicity of active single conductors.

With this final simplification, the package model can now be assembled. Since we are allowed only one active conductor but have three unique wires to consider, we must build three models, one each for each wire type as the active conductor.

Starting with wire 1, we obtain Fig. 5.1. Considering only next neighbors yields in the vertical direction three-conductor transmission lines, which contain only type 1 wires (see mechanical drawings). The first section on the horizontal direction contains also only type 1 wires. Where the active wire enters the second section, the type 1 neighbors vanish and type 2 wires join. At the entrance of the third section, one of the type 2 neighbors is retained, but the other type 2 neighbor is replaced by a type 3 neighbor. That defines 5 three-conductor transmission lines for an active wire type 1.

The wires which are "lost" or "picked up" at the section boundaries can be continued as simple transmission lines, which are identical to the transmission lines defined for the "simplified model without cross-talk". Note that the characteristic impedance Z_0 of the simple transmission line is close to but not equal to the either the partial characteristic impedance Z_1 or the partial characteristic impedance Z_2 (Fig. 4). The relationship is rather $Z_0 < Z_2 < Z_1$.

The models for active wires 2 and 3, which are derived similarly, are shown in Figures 5.2 and 5.3, respectively. In total, 12 three-conductor transmission lines have been defined. Their impedance and delay parameters are listed in Table 2. Attenuation should be added after characterization as needed. Translation into resistance, inductance (self and mutual inductance of 3 loops), conductance, and capacitance (partial capacitances between all conductors) parameters is possible. While such a representation is less conducive to understanding the transmission line behavior, it may still be required for some simulation programs.

5. Parameter Estimation

The parameters listed in Tables 1 and 2 need to be determined by an appropriate characterization of the completed package. The most practical method will probably be a combination of tests and theoretical analyses. On the basis of design parameters combined with generic manufacturer's information, estimates have been provided and entered into the Tables as "typical" values.

The physical length of the lines (wire sections), which varies in horizontal section 3, could be specified in a separate table for all 360 interconnects but has instead been captured as a Min/Max range.

6. A Sample Simulation

Figures 6 through 8 have been generated by intusoft's ICAP/4 Rx simulation program. Figure 6 shows the circuit schematic, which comprises a maximum length path from a 50 Ω driver through the package into a 50 Ω load. This combination presents the worst case for the package and the best case for its environment.

In this example, we try to answer the question what happens to a signal traveling through the package. Therefore, we can use the simplified transmission line model without cross-talk. Figures 7 and 8 show the voltages at all coupling points. Figure 7 has been simulated with an unrealistically short rise time of 10ps in order to make the effects of all section visible. Figure 8 has been simulated with a more realistic rise time of 100 ps. The delay produced by the package is in either case about 90 ps. Figure 8

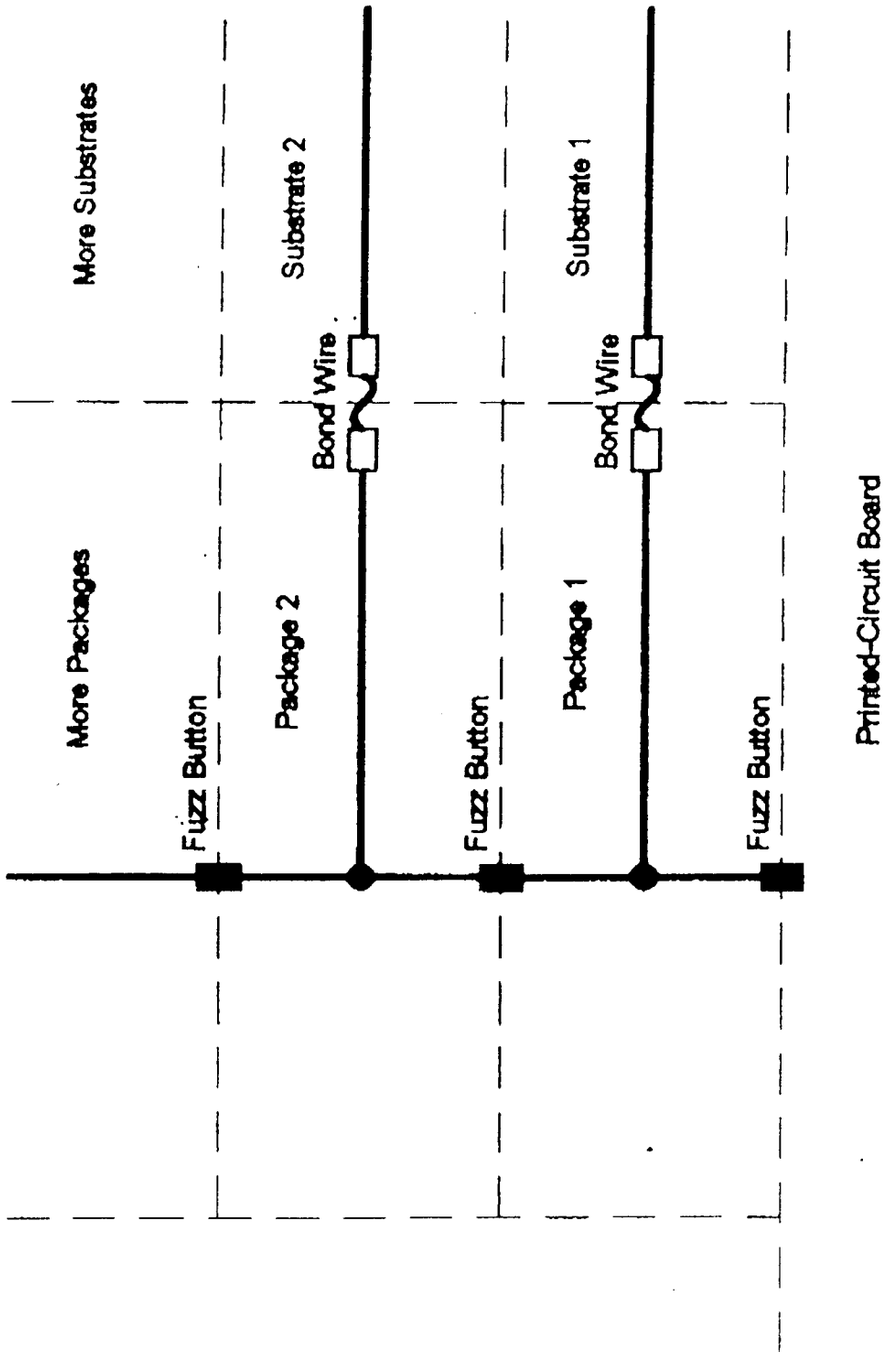
More Substrates
Substrate 2
Substrate 1
Bond Wire
Bond Wire
More Packages
Fuzz Button
Package 2
Fuzz Button
Package 1
Fuzz Button
Printed-Circuit Board

Figure 1

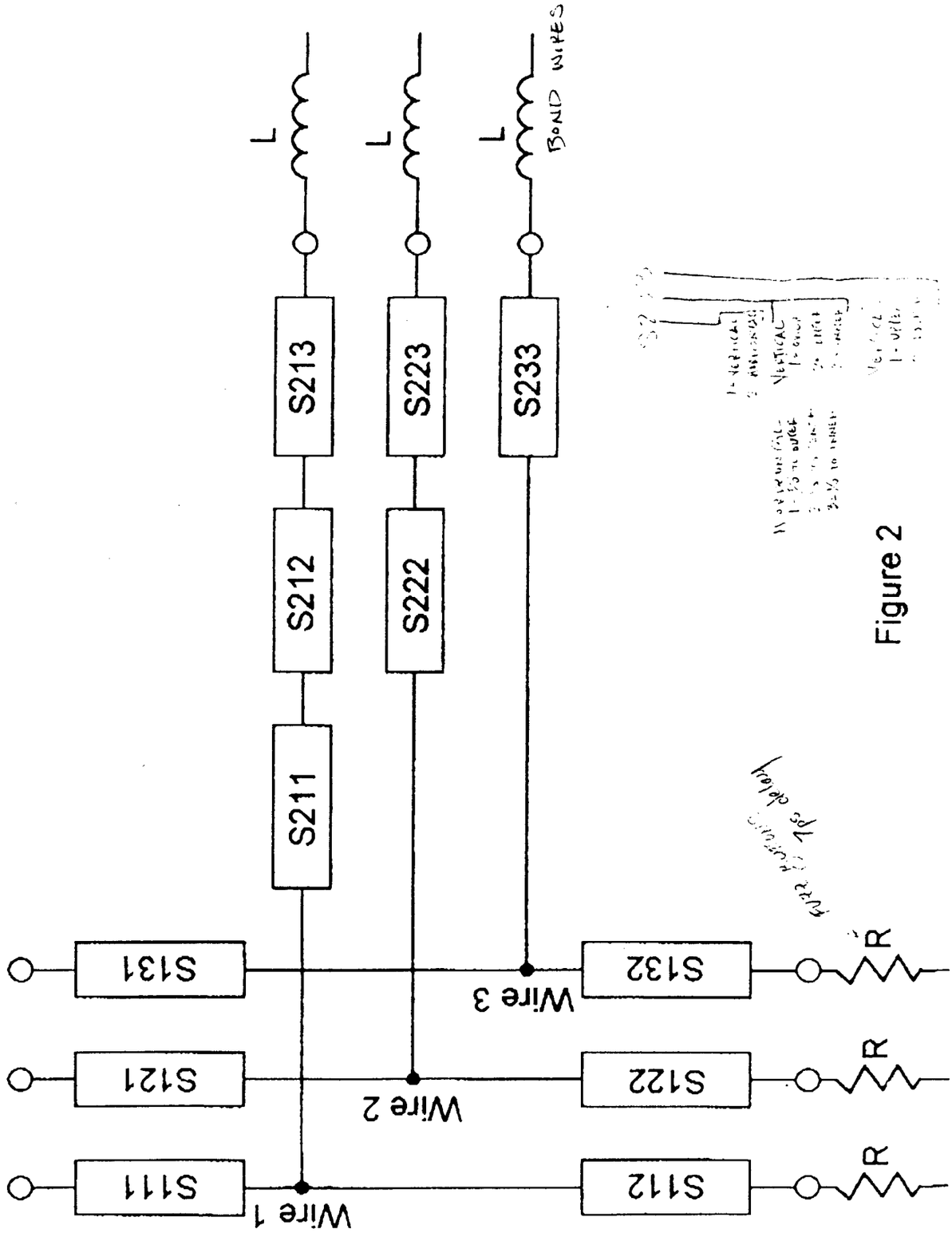
S111
S121
S131
S211
S212
S213
S222
S223
S233
S112
S122
S132
Wire 1
Wire 2
Wire 3
R
R
R
L
L
L
BOND WIRES

Figure 2

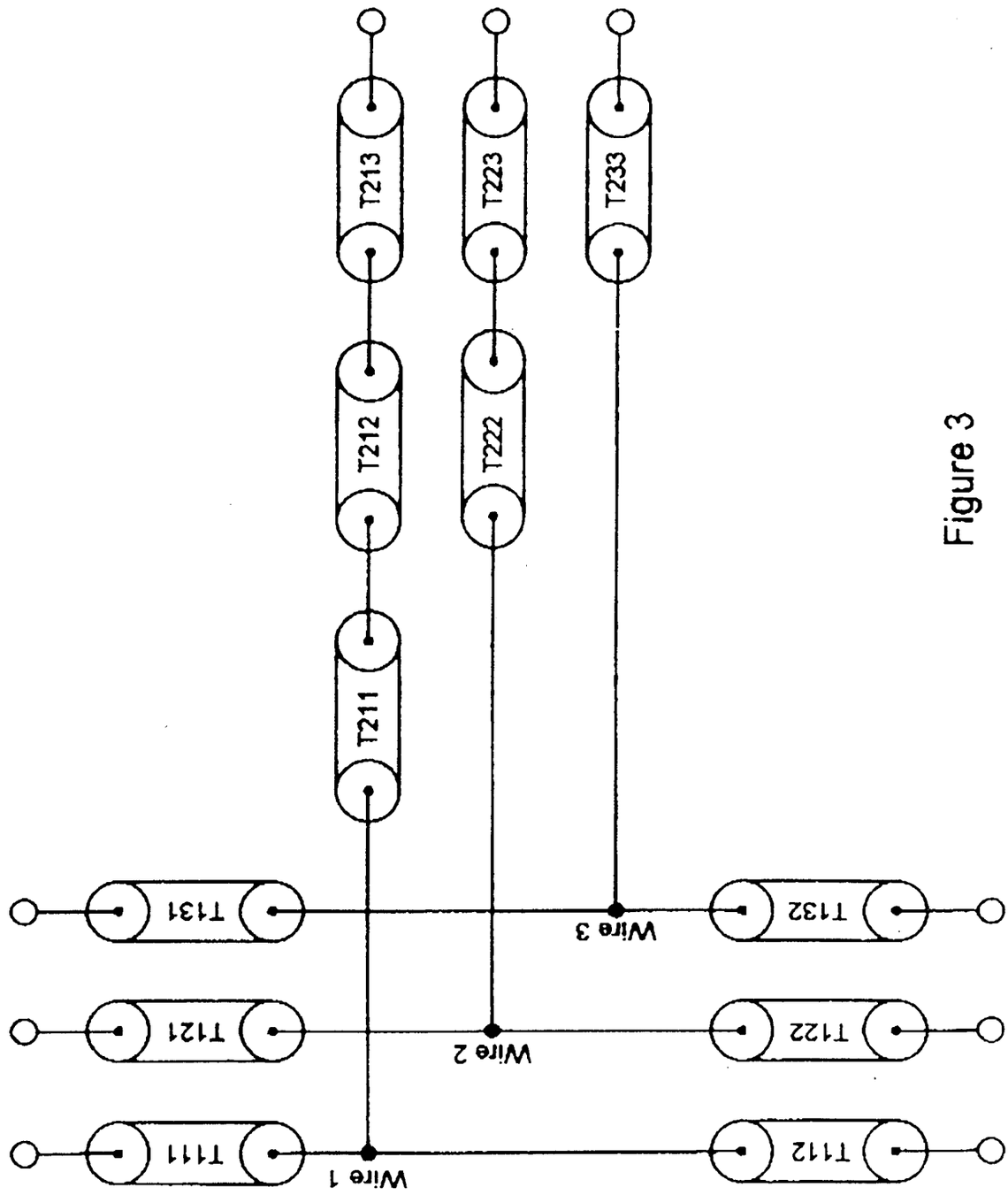
T111
T121
T131
T112
T122
T132
Wire 1
Wire 2
Wire 3
T211
T212
T213
T222
T223
T233

Figure 3

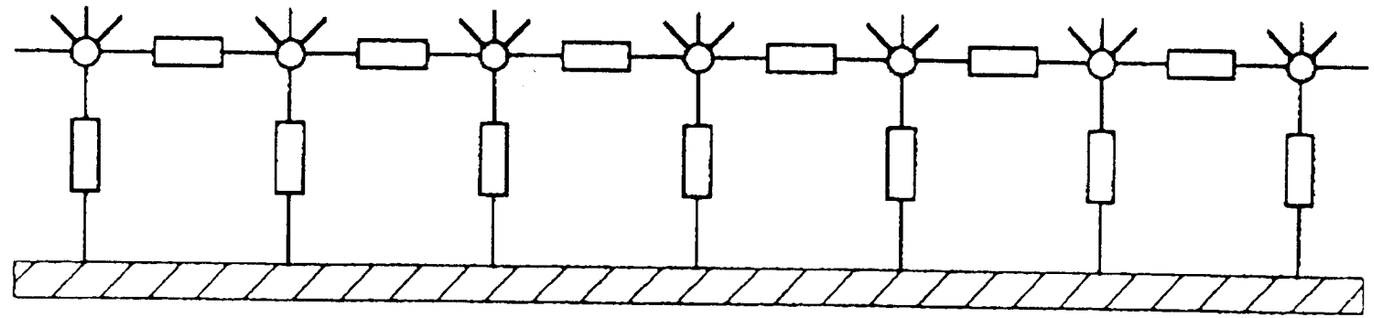

Figure 4.1

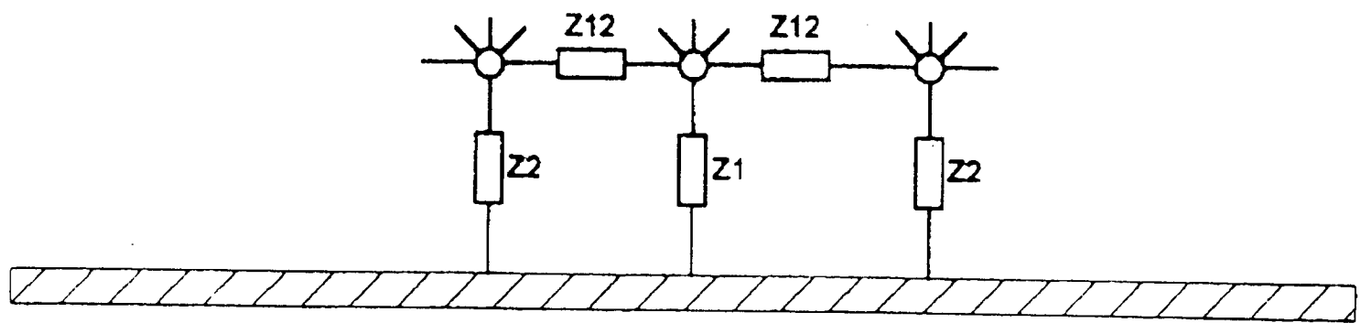

Figure 4.2

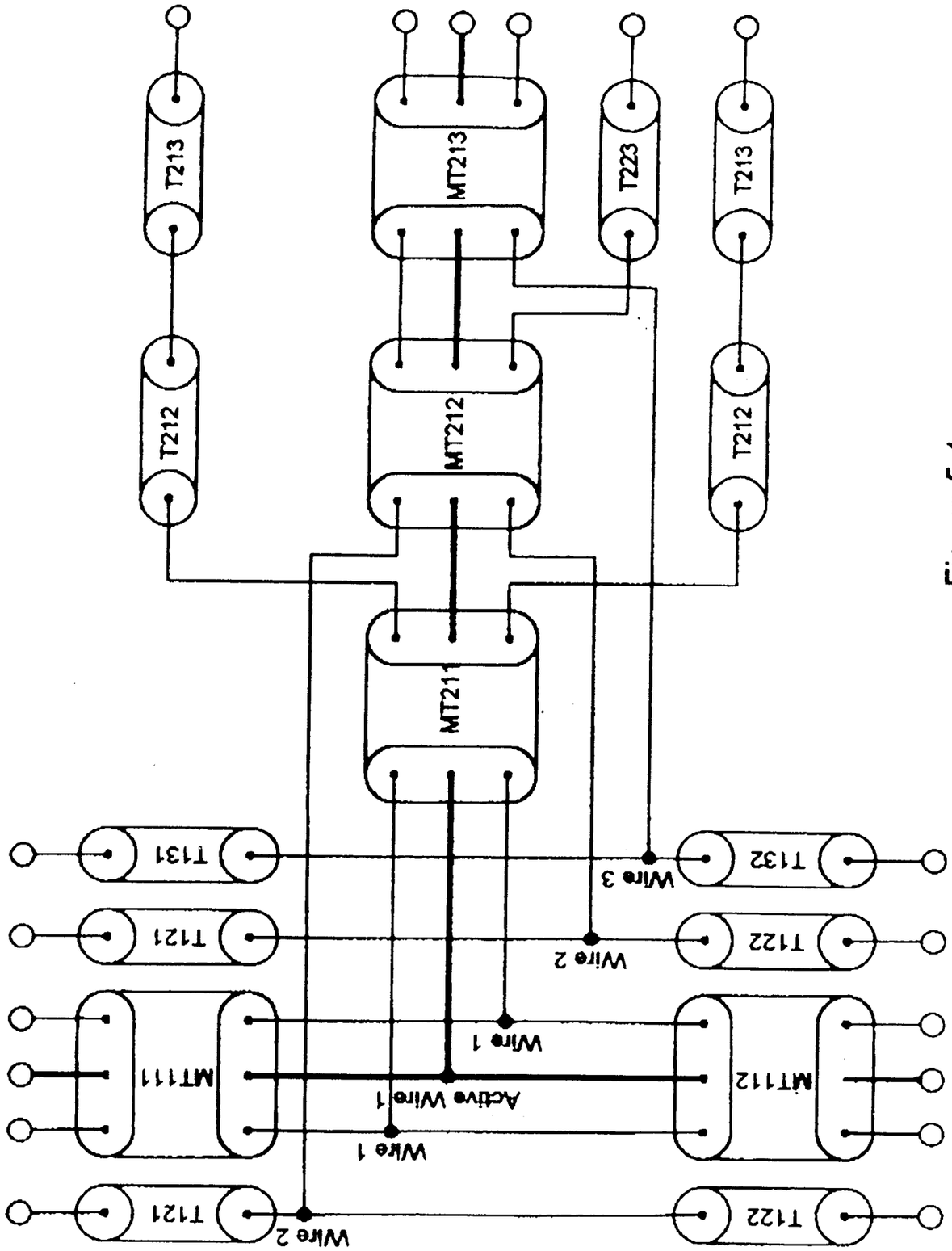
T213
T212
MT213
MT212
MT211
T223
T213
T212
T131
T121
MT1111
T121
T132
T122
MT1112
T122
Wire 3
Wire 2
Wire 1
Active Wire 1
Wire 1
Wire 2

Figure 5.1

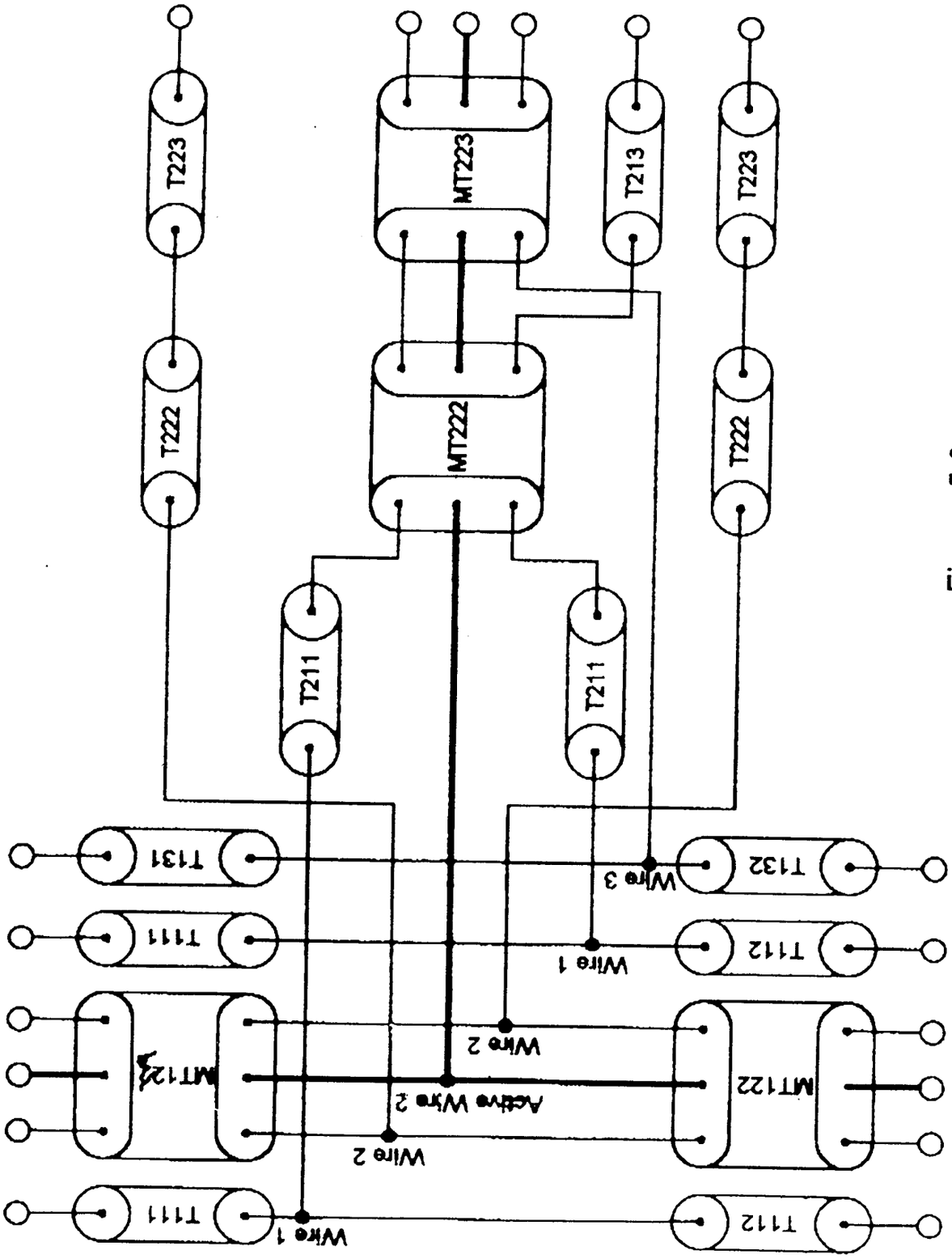
T223
T222
MT223
MT222
T213
T223
T222
T211
T211
T131
T111
MT122
T111
T132
T112
MT122
T112
Wire 3
Wire 1
Wire 2
Active Wire 2
Wire 2
Wire 1

Figure 5.2

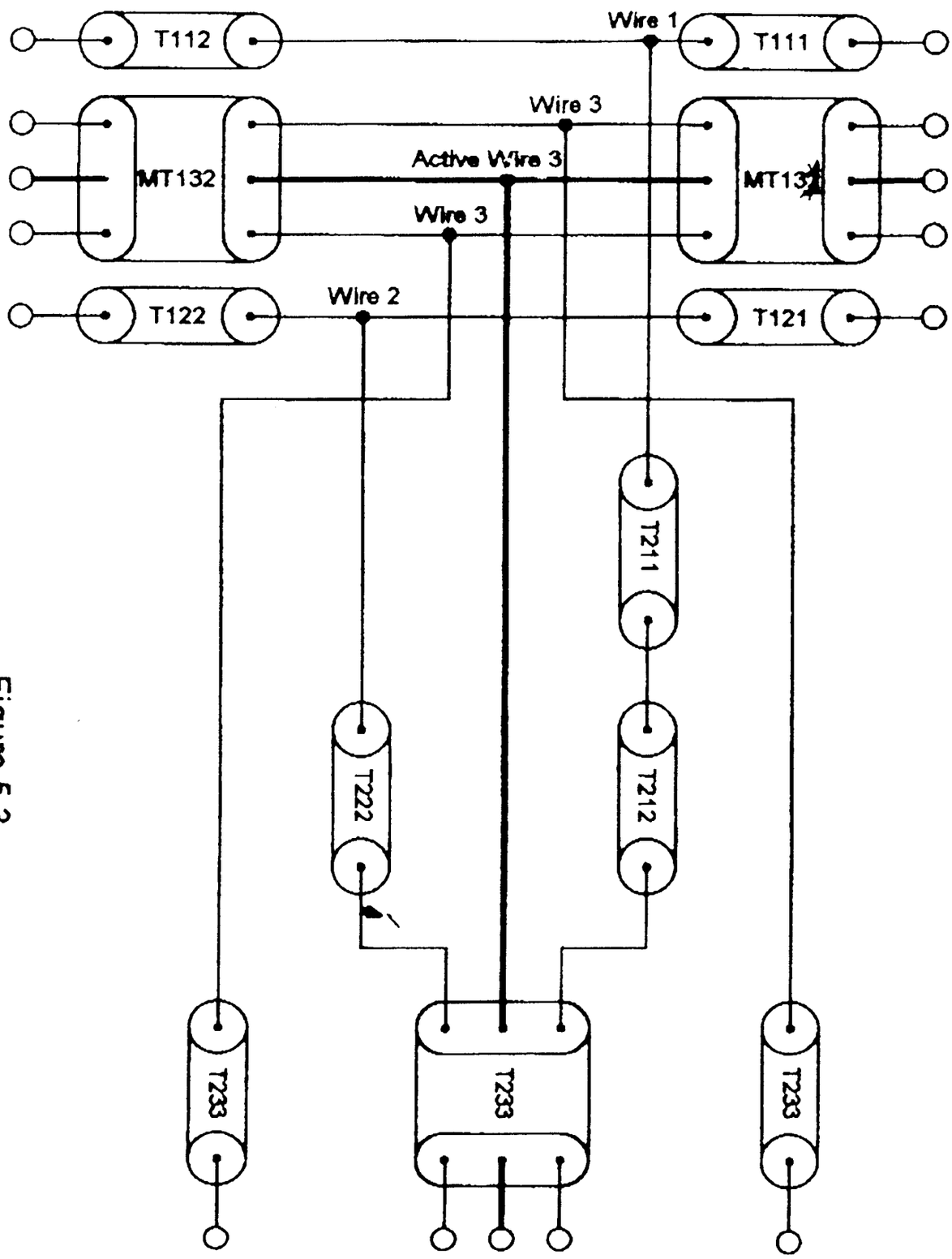

Figure 5.3

Table 1

Simple Transmission Lines (one conductor plus ground)

Line Type Number		111	112	121	122	131	132	211	212	213	222	223	233
R/(Ω/mm)	Min Typ Max	0.016	0.016	0.016	0.016	0.016	0.016	0.042	0.042	0.042	0.07	0.07	0.042
L/(pH/mm)	Min Typ Max	788	714	630	561	788	714	540	520	500	520	500	500
G	Min Typ Max	0	0	0	0	0	0	0	0	0	0	0	0
C/(pF/mm)	Min Typ Max	0.14	0.15	0.18	0.19	0.14	0.15	0.19	0.19	0.20	0.19	0.20	0.20
Zo/Ohm	Min Typ Max	75	70	60	55	75	70	54	52	50	52	50	50
D/(ps/mm)	Min Typ Max	10.5	10.2	10.5	10.2	10.5	10.2	10	10	10	10	10	10
a(1/mm)	Min Typ Max	0.000107	0.000114	0.000133	0.000145	0.000107	0.000114	0.000389	0.000404	0.00042	0.000673	0.0007	0.00042
Len/mm	Min Typ Max	1.8	1.7	1.8	1.7	1.8	1.7	1.4	1.5	2.4 3.9	1.5	2.4 3.9	2.4 3.9

Table 2

Multi-Conductor Transmission Lines (three conductors plus ground)

Line Type Number		111	112	121	122	131	132	211	212	213	222	223	233
Z1/Ohm	Min												
	Typ												
	Max												
Z2/Ohm	Min												
	Typ												
	Max												
Z12/Ohm	Min												
	Typ												
	Max												
D/(ps/mm)	Min												
	Typ												
	Max												
a1 (1/mm)	Min												
	Typ												
	Max												
a2/(1/mm)	Min												
	Typ												
	Max												
Len/mm	Min												
	Typ												
	Max												

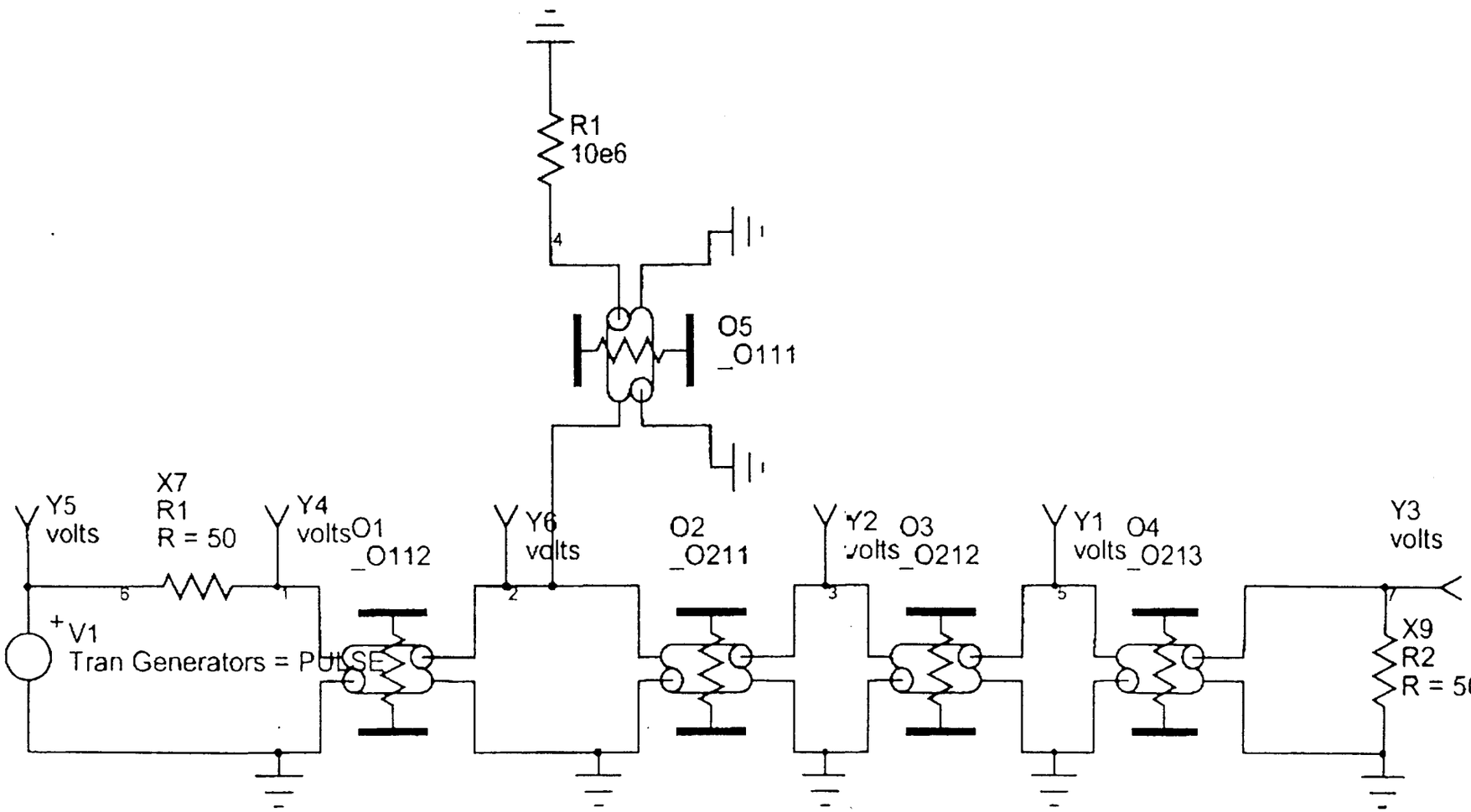
R1
10e6
4
O5
_O111
Y5
volts
X7
R1
R = 50
Y4
volts
O1
_O112
Y6
volts
O2
_O211
Y2
volts
O3
_O212
Y1
volts
O4
_O213
Y3
volts
+
V1
Tran Generators = PULSE
X9
R2
R = 50

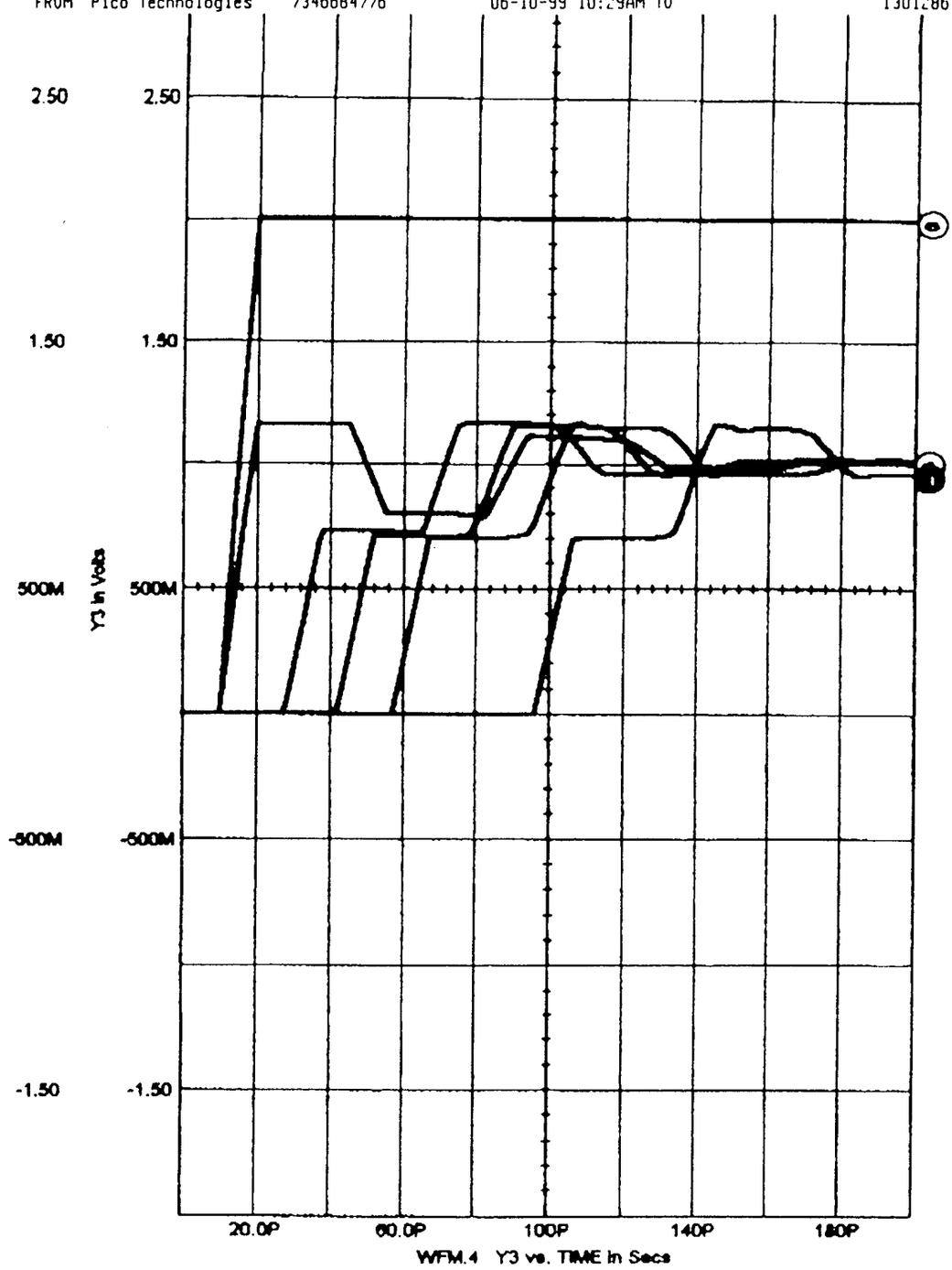
2.50
2.50
1.50
1.50
500M
500M
-500M
-500M
-1.50
-1.50
Y3 in Volts
20.0P
60.0P
100P
140P
180P
WFM.4 Y3 vs. TIME in Secs

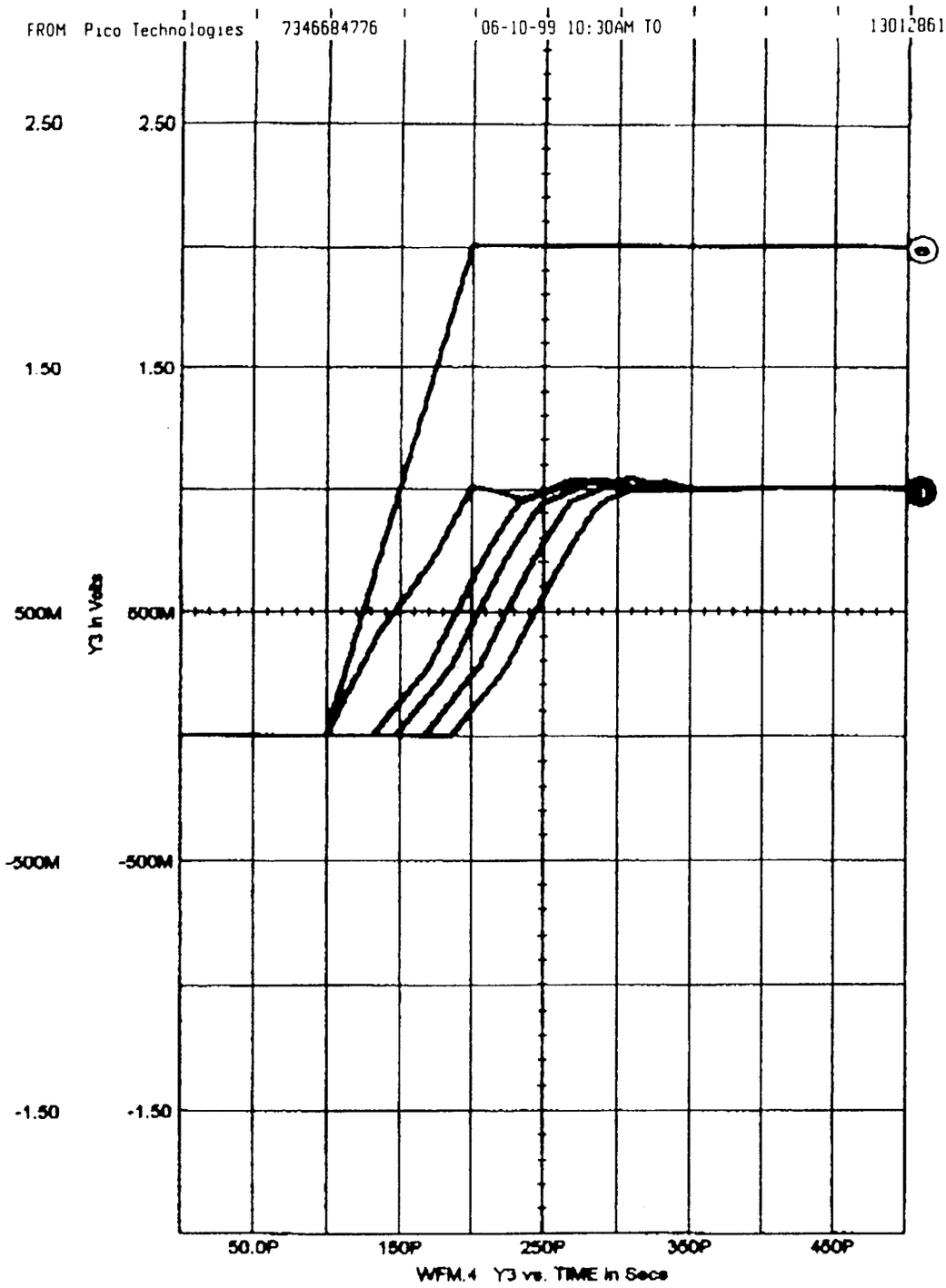
2.50
2.50
1.50
1.50
500M
500M
-500M
-500M
-1.50
-1.50
Y3 in Volts
50.0P
150P
250P
350P
450P
WFM.4 Y3 vs. TIME in Secs

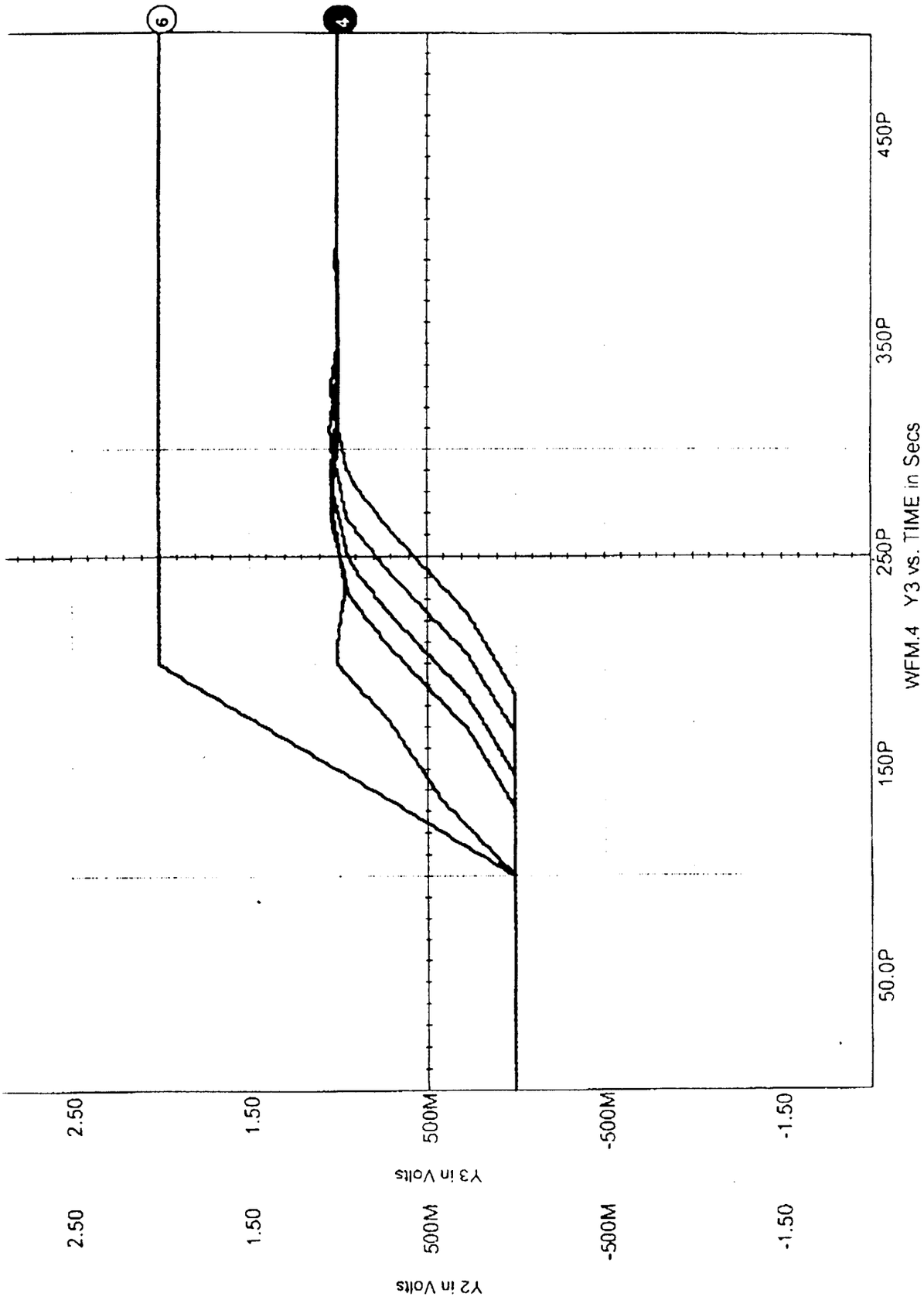
6
4
2.50
1.50
500M
-500M
-1.50
Y3 in Volts
2.50
1.50
500M
-500M
-1.50
Y2 in Volts
50.0P
150P
250P
350P
450P
WFM.4 Y3 vs. TIME in Secs

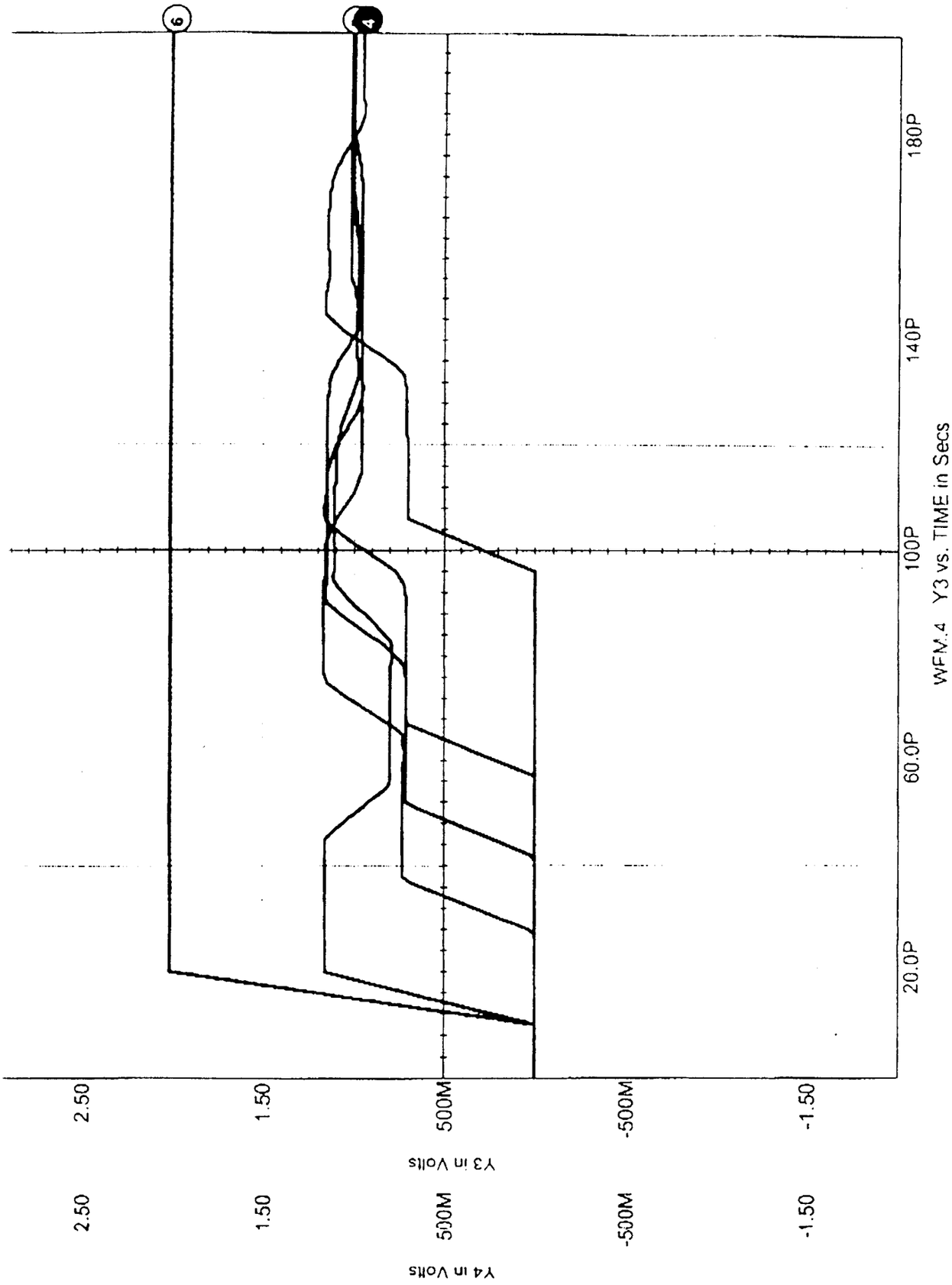
6
4
2.50
1.50
500M
-500M
-1.50
Y3 in Volts
2.50
1.50
500M
-500M
-1.50
Y4 in Volts
20.0P
60.0P
100P
140P
180P
WFM.4 Y3 vs. TIME in Secs

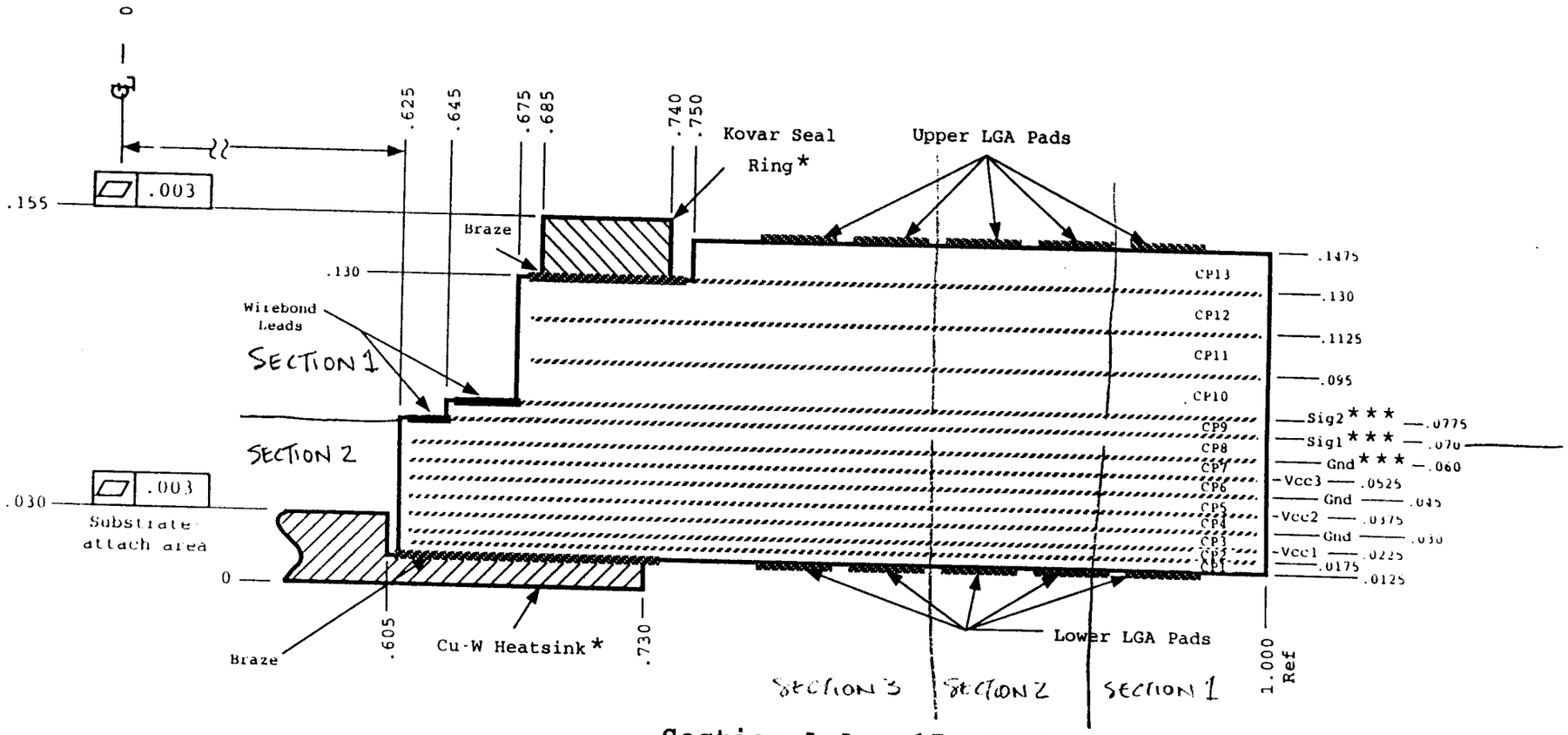

Section A-A - 15X Scale

* Plate with 50 µin min. Ni
Au overplate opt. on seal-ring only.

*** +/-15% tolerance on thickness of 2 ceramic layers between these 3 metallizations.

95.5% white alumina (Al_2O_3) ceramic

Refractory metal (primarily tungsten)

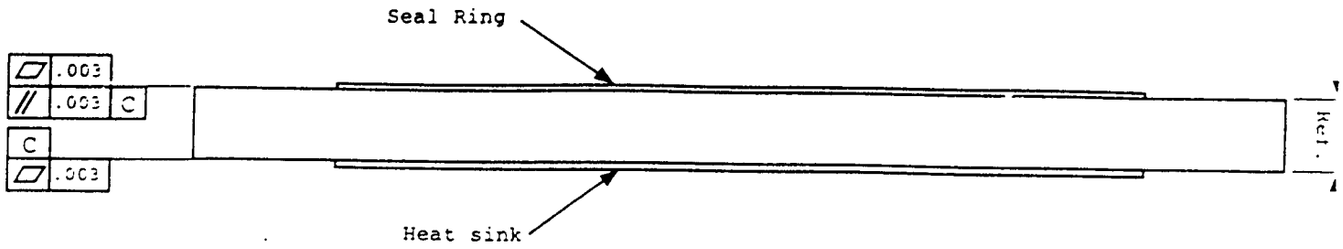
Seal Ring
.003
.003
C
C
.003
Ref.
Heat sink

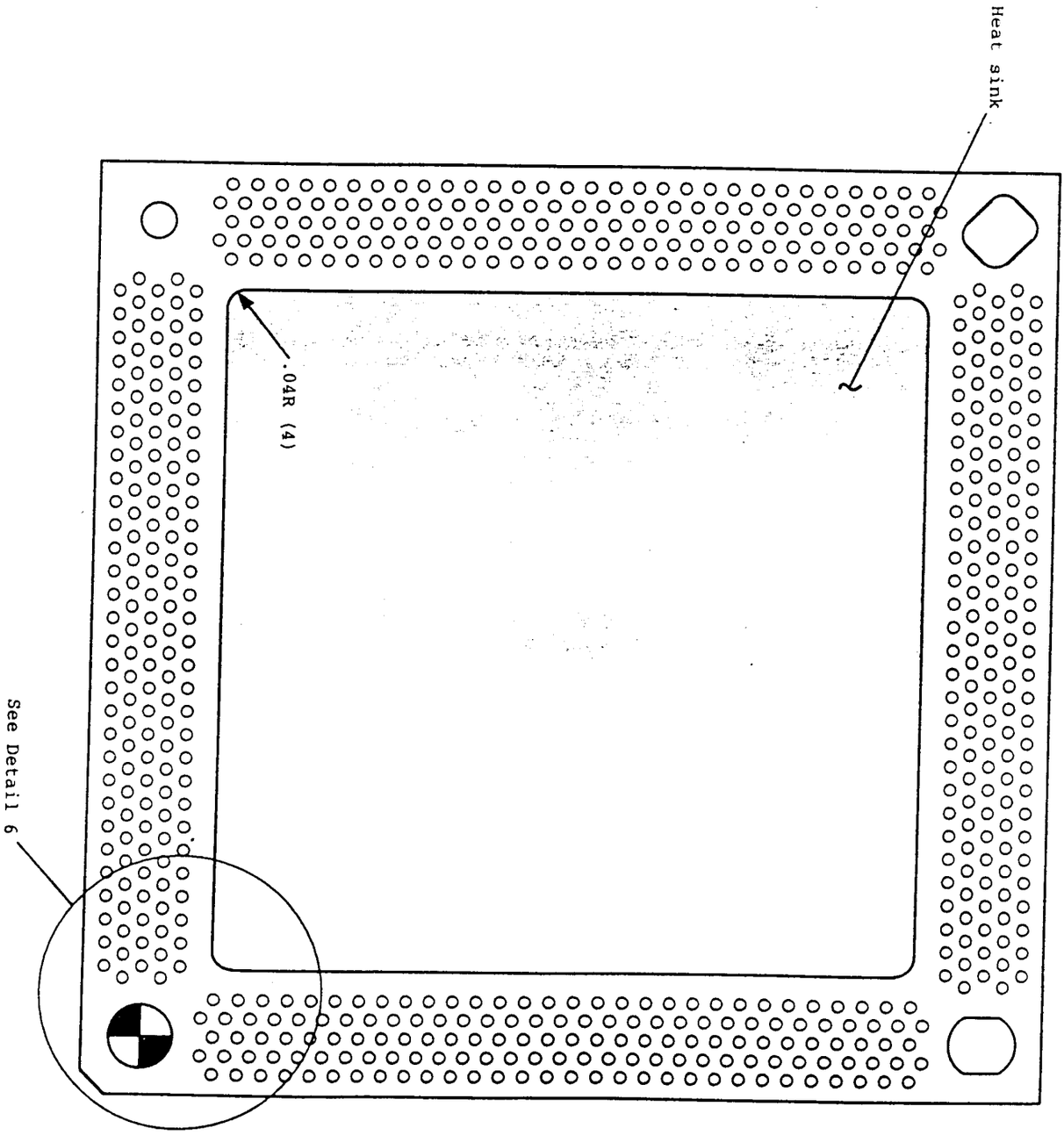
Heat sink
.04R (4)
See Detail 6