NOTE: The cover page of this standard has been changed for administrative reasons. There are no changes to this document.

INCH - POUND

MIL-STD-750D
28 FEBRUARY 1995
SUPERSEDING
MIL-STD-750C
23 FEBRUARY 1983

DEPARTMENT OF DEFENSE

TEST METHOD STANDARD

SEMICONDUCTOR DEVICES

AMSC N/A FSC 5961

DISTRIBUTION STATEMENT A. **Approved for public release; distribution is unlimited.**

Test Methds for Semiconductor Devices.

MIL-STD-750D

1. This Military Standard is approved for use by all Departments and Agencies of the Department of Defense.

2. Beneficial comments (recommendations, additions, deletions) and any pertinent data which maybe of use in improving this document should be addressed to: Commander, Defense Electronics Supply Center, ATTN: DESC-ELD, 1507 Wilmington Pike, Dayton, OH 45444-5270 by using the Standardization Document Improvement Proposal (DD Form 1426) appearing at the end of this document or by letter.

3. Entire standard revised.

CONTENTS

			Page
Paragraph	1.	SCOPE	1
	1.1	Purpose	1
	1.2	Numbering system	1
	1.2.1	Classification of tests	1
	1.2.2	Revisions	1
	1.3	Method preference	1
	2.	APPLICABLE DOCUMENTS	2
	2.1	Government documents	2
	2.1.1	Specifications, standards, and handbooks	2
	2.1.2	Other Government documents, drawings, and publications	2
	2.2	Non-Government publications	3
	2.3	Order of precedence	3
	3.	DEFINITIONS	4
	3.1	Abbreviations, symbols, and definitions	4
	3.1.1	Abbreviations used in this standard	4
	4.	GENERAL REQUIREMENTS	5
	4.1	Test conditions	5
	4.1.1	Permissible temperature variation in environmental chambers	5
	4.1.2	Electrical test frequency	5
	4.1.3	Accuracy	5
	4.1.3.1	Test methods and circuits	6
	4.1.4	Calibrationrequirements	6
	4.2	Orientations	6
	4.3	General precautions	7
	4.3.1	Transients	7
	4.3.2	Test conditions for electrical measurements	7
	4.3.3	Pulse measurements	8
	4.3.4	Test circuits	8
	4.3.4.1	Test method variation	8
	4.3.5	Soldering	8
	4.3.6	Order of connection of leads	8
	4.3.7	Radiation precautions	8
	4.3.8	Handling precautions	8
	4.3.8.1	UHF and microwave devices	8
	4.3.8.2	Electrostatic discharge sensitive (ESDS) devices	8
	4.4	Continuity verification of burn-in and life tests	8
	4.4.1	Bias interruption	9
	4.5	Requirements for HTRB and burn-in	9
	4.6	Bias requirements	9
	5.	DETAILED REQUIREMENTS	11
	6.	NOTES	12
	6.1	International standardization agreement	12

FIGURES

Figure	1.	Orientation of noncylindrical semiconductor device to direction of accelerating force	7
	2.	Orientation of cylindrical semiconductor device to direction of accelerating force	7

INDEX

Index	Numerical index of test methods	15

1. SCOPE

1.1 Purpose. This standard establishes uniform methods for testing semiconductor devices, including basic environmental tests to determine resistance to deleterious effects of natural elements and conditions surrounding military operations, and physical and electrical tests. For the purpose of this standard, the term “devices” includes such items as transistors, diodes, voltage regulators, rectifiers, tunnel diodes, and other related parts. This standard is intended to apply only to semiconductor devices. The test methods described herein have been prepared to serve several purposes:

a. To specify suitable conditions obtainable in the laboratory that give test results equivalent to the actual service conditions existing in the field, and to obtain reproducibility of the results of tests. The tests described herein are not to be interpreted as an exact and conclusive representation of actual service operation in any one geographic location, since it is known that the only true test for operation in a specific location is an actual service test at that point.

b. To describe in one standard all of the test methods of a similar character which now appear in the various joint-services semiconductor device specifications, so that these methods may be kept uniform and thus result in conservation of equipment, manhours, and testing facilities. In achieving this objective, it is necessary to make each of the general tests adaptable to a broad range of devices.

c. The test methods described herein for environmental, physical, and electrical testing of devices shall also apply, when applicable, to parts not covered by an approved military sheet-form standard, specification sheet, or drawing.

1.2 Numbering system. The test methods are designated by numbers assigned in accordance with the following system:

1.2.1 Classification of tests. The tests are divided into five areas. Test methods numbered 1001 to 1999 inclusive, cover environmental tests; those numbered 2001 to 2999 inclusive cover mechanical-characteristics tests. Electrical-characteristics tests are covered in two groups; 3001 to 3999 inclusive covers tests for transistors and 4001 to 4999 covers tests for diodes. Test methods numbered 5000 to 5599 inclusive are for high reliability space applications.

1.2.2 Revisions. Revisions are numbered consecutively using a period to separate the test method number and the revision number. For example, 4001.1 is the first revision of test method 4001.

1.3 Method of reference. When applicable, test methods contained herein shall be referenced in the individual specification by specifying this standard, the method number, and the details required in the summary of the applicable method. To avoid the necessity for changing specifications that refer. to this standard, the revision number should not be used when referencing test methods. For example, use 4001, not 4001.1.

2. APPLICABLE DOCUMENTS

2.1 Government documants.

2.1.1 Specifications, standards, and handbook. The following specifications, standards, and handbooks form a part of this document to the extent specified herein. Unless otherwise specified, the issues of these documants are those listed in the issue of the Department of Defense Index of Specifications end Standards (DODISS) and supplement thereto, cited in the solicitation (see 6.2).

SPECIFICATIONS

MILITARY

MIL-S-19500 - Semiconductor Devices, General Specification for.

STANDARDS

MILITARY

MIL-STD-12 - Abbreviations for used on Drawings, Specification Standards & in Technical Docunents
MIL-STD-202 - Test Methods for Electronic and Electrical Component Parts.
MIL-STD-45662 - Calibration Systems Requirements.
MIL-STD-1686 - Electrostatic Discharge Control Program for Protection of Electrical and Electronic Parts, Assemblies and Equipment (Excluding Electrically Initiated Explosive Devices) (Metric).

HANDBOOKS

MILITARY

MIL-HDBK-263 - Electrostatic Discharge Control Handbook for Protection of Electrical and Electronic Parts, Assemblies and Equipment (Excluding Electrically Initiated Explosive Devices) (Metric).

(Unless otherwise indicated, copies of federal and military specifications, standards, and handbooks are available from the Defense Printing Service Detachment Office, Bldg. 4D (Customer Service), 700 Robbins Avenue, Philadelphia, PA 19111-5094.)

2.1.2 Other Government documents. drawings. and publications. The following other Government documents, drawings, and publications form a part of this document to the extent specified herein. Unless otherwise specified, the issues are those cited in the solicitation.

DRAWINGS - JAN

103-JAN - Filter for Testing Crystal Rectifier 1N23, 1N23A and 1N23B.
107-JAN - Mixer for Testing Crystal Rectifier Type 1N26.
118-JAN - Figure of Merit Holder for Crystal Rectifier 1N31.
124-JAN - Mixer and Coupling Circuit for Crystal Rectifiers 1N21B.
152-JAN - SA Band Crystal Detector Test Holder.
174-JAN - Mixer for Electron Tube Type 1NS3.
231-JAN - Burn Out Testing Equipment for 1N25 Crystals Schematic Diagram.
233-JAN - Loss Measuring Equipment for 1N25 Crystals Schematic Diagram.
234-JAN - Loss Measuring Equipment for 1N25 Crystals Bill of Material.
236-JAN - Burn Out Testing Equipment for 1N25 Crystals Bill of Materials.
256-JAN - Reverse Pulse Recovery Time Test and Calibration Procedure.
266-JAN - Mixer Holder, Narrow, Band, for 1N263.

DRAWINGS - DESC ASSEMBLY

D6410O - Diode Test Holder, 3,060 MHz (S-Band).
C64169 - Sliding Load (S-Band) Used with D6410O.
C65017 - Assembly, Tri-polar Diode Holder.
D65019 - Diode Test Holder, 9,37S GHz (X-Band).
C65042 - Sliding Load (X-Band) Used with D65019.
D65064 - Diode Test Holder, 16 GHz (Ku-Band).
C65101 - Sliding Load (Ku-Band) Used with D65064.
C66053 - Mixer Holder, Narrow Band, for 1N1838.
B66054 - Adaptor For Burn-Out Test.
C66058 - Burn-Out Tester For Microwave Diodes.

(Copies of drawings may be obtained from the Defense Electronics Supply Center, Directorate of Engineering Standardization (DESC-ELST), 1507 Wilmington Pike, Dayton, Ohio 45444. When requesting copies of these drawings, both the identifying symbol number and title should be stipulated.)

2.2 Non-Government publications. The following documents form a part of this document to the extent specified herein. Unless otherwise specified, the issues of the documents which are DoD adopted are those listed in the DODISS cited in the solicitation. Unless otherwise specified, the issues of documents not listed in the DODISS are the issues of the documents cited in the solicitation (see 6.2).

Standard Handbook for Electrical Engineers.

(Application for copies should be addressed to the McGraw-Hill Book Company, Inc., New York, N.Y. 42840.)

NBS Handbook 59 - Permissible Dose From External Sources of Ionizing Radiation, Recommendations of National Committee on Radiation Protection.
NBS Handbook 73 - Protection Against Radiations from Sealed Gamma Sources.
NBS Handbook 76 - Medical X-Ray Protection Up to 3 Million Volts.

(Application for copies should be addressed to the Superintendent of Documents, Washington, DC 20402.)

2.3 Order of precedence. In the event of a conflict between the text of this document and the references cited herein, the text of this document takes precedence. Nothing in this document, however, supersedes applicable laws and regulations unless a specific exemption has been obtained.

3. DEFINITIONS

3.1 Abbreviations, symbols, and definitions. For the purposes of this standard, the abbreviations, symbols, and definitions specified in MIL-S-19500, MIL-STD-12, and herein shall apply.

3.1.1 Abbreviations used in this standard. Abbreviations used in this standard are defined as follows:

a. ATE - Automatic test equipment.

b. BIST - Backward instability shock test.

c. DPA - Destructive physical analysis.

d. DUT - Device under test.

e. ESD Electrostatic discharge.

f. ESDS - Electrostatic discharge sensitivity.

g. FET - Field-effect transistor.

h. FIST Forward instability shock test.

i. FWHM - Full-width half-max.

j. HTRB - High temperature reverse bias.

k. IF - Intermediate frequency.

l. IGBT - Insulated gate bipolar transistor.

m. LCC - Leadless chip carrier.

n. LINAC - Linear accelerator.

o. MOSFET Metal oxide semiconductor field-effect transistor.

p. PIND - Particle impact noise detection.

q. RH - Relative humidity.

r. SEM - Scanning electron microscope.

s. SOA - Safe operating area.

t. SSOP Steady-state operating power.

u. STU - Sensitivity test unit.

v. SWR - Standing wave ratio.

w. TLD - Thermoluminescence dosimetry.

x. TSP - Temperature sensitive parameter.

4. GENERAL REQUIREMENTS

4.1 Test conditions. Unless otherwise specified herein or in the individual specification, all measurements and tests shall be made at thermal equilibria at an ambient temperature of +25°C ±3°C and at ambient atmospheric pressure and relative humidity and the specified test condition (at environmentally elevated and reduced temperatures) shall have a tolerance of ±3 percent or +3°C, whichever is greater. Whenever these conditions must be closely controlled in order to obtain reproducible results, the referee conditions shall be as follows: temperature +25°C ±l°C, relative humidity 50 ±5 percent, and atmospheric pressure from 650 to 800 millimeters of mercury. Unless otherwise specified in the detail test method, for mechanical test methods, 2000 series, the ambient temperature may be +25°C ±lO°C.

4.1.1 Permissible temprature variation in environmental chambers. When chambers are used, specimens under test shall be located only within the working area defined as follows:

a. Temperature variation within working area: The controls for the chamber shall be capable of maintaining the temperature of any single reference point within the working area within ±2°C or ±4 percent, whichever is greater.

b. Space variation within working area: Chambers shall be so constructed that, at any given time, the temperature of any point within the working area shall not deviate more than ±3°C or ±3 percent, whichever is greater, from the reference point, except for the immediate vicinity of specimens generating heat.

c. Chambers with specified minimun temperatures (such as those used in burn-in and life tests): When test requirements involve a specified minimun test temperature, the controls and chamber construction shall be such that the temperature of any point within the working area shall not deviate more than +8°C, -O°C; or +8 percent, -O percent, whichever is greater, from the specified minimun temperature, except for the immediate vicinity of the specimens generating heat.

4.1.2 Electrical test frequency. Unless otherwise specified, the electrical test frequency shall be 1,000 ±25 Hertz (Hz).

4.1.3 Accuracy. The specified limits are for absolute (true) values, obtained with the specified (nominal) test conditions. Proper allowance shall be made for measurement errors (including those due to deviations from nominal test conditions) in establishing the working limits to be used for the measured values, so that the true values of the device parameters (as they would be under nominal test conditions) are within the specified limits.

The following electrical test tolerances and precautions, unless otherwise specified in the applicable acquisition document, shall be maintained for all device measurements to which they apply (3000, 4000 series and other specified electrical measurements). Wherever test conditions are specified in the applicable acquisition document to a precision tighter than the tolerances indicated below, the specified conditions shall apply and take precedence over these general requirements.

a. Bias conditions shall be held to within 3 percent of the specified value.

b. Such properties as input pulse characteristics, repetition rates, and frequencies shall be held to within 10 percent. Nominal values should be chosen so that ±10 percent variation (or the actual test equipment variation, if less than 10 percent) does not affect the accuracy or validity of the measurement of the specified value.

c. Voltages applied in breakdown testing shall be held within 1 percent of specified value.

d. Resistive loads shall be ±5 percent tolerance.

e. Capacitive loads shall be ±10 percent or ±1 picofarad (pF) tolerance, whichever is greater.

f. Inductive loads shall be ±1O percent or ±5 microhenries (mH) tolerance, whichever is greater.

g. Static parameters shall be measured to within 1 percent.

h. Switching parameters shall be measured to within 5 percent or 1 nanosecond (ns), whichever is greater.

4.1.3.1 Test methods and circuits. Unless otherwise stated in the specific test method, the methods and circuits shown are given as the basic measurement method. They are not necessarily the only method or circuit which can be used, but the manufacturer shall demonstrate to the acquiring activity that alternate methods or circuits which he may desire to use are equivalent and give results within the desired accuracy of measurement (see 4.1.3).

4.1.4 Calibration requirements. Calibration and certification procedures shall be provided in accordance with MIL-STD-45662 for plant standards and instruments used to measure or control production processes and semiconductor devices under test. For those measurements that are not traceable to the National Institute of Standards and Technology (NIST), correlation samples shell be maintained and used as the basis of proving acceptability when such proof is required. In addition, the following requirements shall apply:

a. The accuracy of a calibrating instrument shall be at least four times greater than that of the item being calibrated, unless the item being calibrated is state of the art equipment, which may be near or equal in accuracy to the state of the art calibrating equipment, in which case the four time requirement does not apply. However, the instrument shall be calibrated to correlate with standards established by the NIST.

b. Except in those cases where the NIST recommends a longer period and concurrence is obtained from the qualifying activity, calibration intervals for plant electrical standards shall not exceed one year, and for plant mechanical standards shall not exceed two years.

4.2 Orientations:

X is the orientation of a device with the main axis of the device normal to the direction of the accelerating force, and the major cross section parallel to the direction of the accelerating force.

Y is the orientation of a device with the main axis of the device parallel to the direction of the accelerating force, and the principal base toward (Y_1), or away from (Y_2), the point of application of the accelerating force.

Z is the orientation of a device with the main axis and the major cross section of the device normal to the direction of the accelerating force. Z is 90° of X.

NOTE: For case configurations, other than those shown on figures 1 and 2, the orientation of the device shall be as specified in the individual specification.

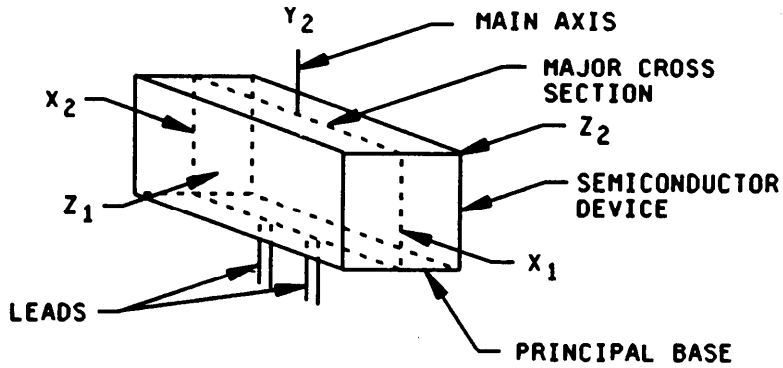

FIGURE 1. Orientation of noncylindrical semiconductor device to direction of accelerating force.

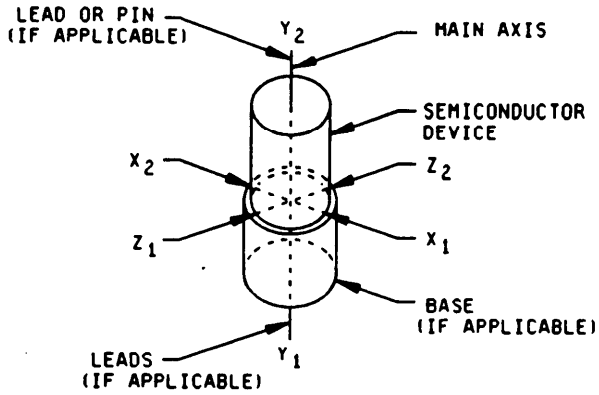

FIGURE 2. Orientation of cylindrical semiconductor device to direction of accelerating force.

4.3 General precautions. The following precautions shall be observed in testing the devices.

4.3.1 Transients. Devices shall not be subjected to conditions in which transients cause the rating to be exceeded.

4.3.2 Test conditions for electrical measurements. Unless otherwise required for a specified test method, semiconductor devices should not be subjected to any condition that will cause any maximum rating of the device to be exceeded. The precautions should include limits on maximum instantaneous currents and applied voltages. High series resistances (constant current supplies) and low capacitances are usually required. If low cutoff, or reverse current devices are to be measured, for example, nanoampere units, care should be taken to ensure that parasitic circuit currents or external leakage currents are small, compared with the cutoff or reverse current of the device to be measured.

4.3.2.1 Steady state dc measurements (method 4000). Unless otherwise specified, all steady state dc parameters are defined using steady state dc conditions.

4.3.2.2 Pulse measurements (method 4000). When device static or dynamic parameters are measured under "pulsed" conditions, in order to avoid measurement errors introduced by device heating during the measurement period, the following items should be covered in the detail specification:

a. The statement "Pulsed test" shall be placed by the test specified.

b. Unless otherwise specified, the pulse time (t_p) shall be ≤ 10milliseconds and the duty cycle shall be a maximun of 2 percent; within this limit the pulse must be long enough to be compatible with test equipment capability and the accuracy required, and short enough to avoid heating.

4.3.3 Test circuits. The circuits shown are given as 1 examples which may be used for the measurements. They are not necessarily the only circuits which can be used but the manufacturer shall demonstrate to the Government that other circuits which he may desire to use will give results within the desired accuracy of measurement. Circuits are shown for PNP transistors in one circuit configuration only. They may readily be adapted for NPN devices and for other circuit configurations.

4.3.3.1 Test method variation. Variation from the specified test methods used to verify the electrical parameters are allowed provided that it is demonstrated to the preparing activity or their agent that such variations in no way relax the requirements of this specification and that they are approved before testing is performed. For proposed test variations, a test method comparative error analysis shall be made available for checking by the preparing activity or their agent.

4.3.4 Soldering. Adequate precautions shall be taken to avoid damage to the device during soldering required for tests.

4.3.5 Order of connection of leads. Care should be taken when connecting a semiconductor device to a power source. The common terminal shall be connected first.

4.3.6 Radiation precautions. Due precautions shall be used in storing or testing semiconductor devices in substantial fields of X-rays, neutrons, or other energy particles.

4.3.7 Handling Precautions.

4.3.7.1 UHF and microwave devices. Handling precautions for UHF and microwave devices shall be as follows:

a. Ground all equipment.

b. Make hand contact to the equipment while holding the base end and maintain hand contact with the equipment until the device is in place.

c. Where applicable keep devices in metal shields until they are inserted the equipment or until necessary to remove for test.

4.3.7.2 Electrostatic discharge sensitive devices. Handling precautions shall be observed in accordance with DOD-HDBK-263 during testing of Electrostatic Discharge Sensitive (ESDS) devices. The area where ESDS device tests are performed shall meet the requirements of an ESD Protected Area of MIL-STD-1686.

4.4 Continuity verification of burn-in and life tests. The test setup shall be monitored at the test temperature initially and at the conclusion of the test to establish that all devices are being stressed to the specified requirements. The following is the minimun acceptable monitoring procedure:

a. Device sockets. Initially and at least each 6 months thereafter, each test board or tray shall be checked to verify continuity to connector points to assure that the correct voltage bias will be applied. Except for this initial and periodic verification, each device or device socket does not have to be checked; however, random sampling techniques shall be applied prior to each time a board is used and shall (be adequate to assure that there are correct and continuous electrical connections to the DUTs.

b. Connectors to test boards or trays. After the test boards are loaded with devices, inserted into the system, and brought up to the specified operating conditions, each required test voltage and signal condition shall be verified in at least one location on each test board or tray so as to assure electrical continuity and the correct application of specified electrical stresses for each connection or contact pair used in the applicable test configuration. The system may be opened for a maximum of 10 minutes.

c. At the conclusion of the test period, prior to removal of devices from temperature and bias conditions, the voltage and signal condition verification of 4.4b shall be repeated.

d. For class S devices, each test board or tray and each test socket shall be verified prior to test to assure that the specified bias conditions are applied to each device. This may be accomplished by verifying the device functional response at each device output(s) or by performing a socket verification on each socket prior to loading. An approved alternate procedure may be used.

4.4.1 Bias interruption. Where failures or open contacts occur which result in removal of the required bias stresses for any period of the required bias duration, the bias time shall be extended to assure actual exposure for the total minimum specified test duration. Any loss(es) or interruption(s) of bias in excess of 10 minutes total duration while the chamber is at temperature during the final 8 hours of burn-in shall require extension of the bias duration for an uninterrupted 8 hours minimum, after the last bias interruption.

4.5 Requirements for HTRB and burn-in.

a. The temperature of +20°C minimum is the ambient air temperature to which all devices should be exposed during power screening where room ambient is specified.

b. An increase in effective ambient temperature from cumulative induced power to DUTs shall not result in device junction temperature exceeding maximum ratings.

c. Ambient temperature shall not be measured in the convection current (above) or downstream (Fan Air) of OUTS.

d. Moving air greater than 30 CFM (natural convection) may be allowed for the purpose of temperature equalization within high device density burn-in racks.

e. High velocity or cooled air shall not be used for the purpose of increasing device ratings.

f. Power up of burn-in racks may occur when ambient is less than specified. When thermal equilibrium has been reached, or five hours maximum has occurred, the ambient shall be at the specified value. Time accrued prior to reaching specified ambient shall not be chargeable, to the life test duration.

g. If the ambient at or beyond the five hour point is not the specified value, a nonconformance shall exist requiring corrective action.

h. Time is not chargeable during the period when specified conditions are not maintained. If device maximum ratings are exceeded and the manufacturer intends to submit the lot affected, the product on test must be evaluated by re-starting the burn-in or HTRB from zero hours at the specified temperature and verifying that the end-point failure rate is typical for this product type from a review of established records.

i. Chamber temperature for HTRB and burn-in shall be controlled to ±3 percent of the specified value. (Unless otherwise specified in 4.1.l.) This temperature shall be maintained within the chamber. Forced air may be used to equalize temperature within the chamber but shall not be used as a coolant to increase device power capability.

4.6 Bias retirements.

a. Bias errors at the power supply source caused by changing power supply loads during temperature transitions shall not exceed ±5 percent of that specified value.

b. Bias values at the source, during stabilized conditions, shall not exceed ±3 percent of the specified value.

c. Burn-in apparatus shall be arranged so as to result in the approximate average power dissipation for each device whether devices are tested individually or in a group. Bias and burn-in circuitry tolerances should not vary test conditions to individual devices by more than ±5 percent of specified conditions.

d. Normal variation in individual device characteristics need not be compensated for by burn-in circuitry.

e. Burn-in equipment shall be arranged so that the existence of failed or abnormal devices in a group does not negate the effect of the test for other devices in the group. Periodic verification will assure that specified conditions are being maintained. Verification shall be performed, as a minimum, at the starting and end of screening.

f. Lead, stud, or case mounted devices shall be mounted in their normal mounting configuration and the point of mechanical connection shall be maintained at no less than the specified ambient.

5. DETAILED REQUIREMENTS (NOT APPLICABLE)

6. NOTES

6.1 International standardization agreement. Certain provisions of this standard are the subject of international standardization agreement. When amendment, revision, or cancellation of this standard is proposed which will affect or violate the international agreement concerned, the preparing activity will take appropriate reconciliation action through international standardization channels, including departmental standardization offices, if required.

6.2 Subject term (key word) listing.

Transistor
Diode
Thyristors
Microwave
Field-effect

CONCLUDING MATERIAL

Custodians:
Navy - EC
Army - ER
Air Force - 17
NASA - NA

Review activities:
Army - AR, ER, MI
Navy - AS, CG, MC, SH
Air Force - 19, 85, 99

Preparing activity:
DLA - ES

(Project 5961-1451)

NUMERICAL INDEX

of

TEST METHODS

Numerical index of test methods

Method no.	Title
	Environmental tests (1000 series).
1001.1	Barometric pressure (reduced).
1011	Immersion.
1015	Steady-state primary photocurrent irradiation procedure (electrton beam).
1016	Insulation resistance.
1017.1	Neutron irradiation.
1018	Internal water-vapor content.
1019.4	Steady-state total dose irradiation procedure.
1020.2	Electrostatic discharge sensitivity (ESDS) classification.
1021.2	Moisture resistance.
1022.5	Resistance to solvents.
1026.5	Steady-state operation life.
1027.3	Steady-state operation life (sample plan).
1031.5	High-temperature life (nonoperating).
1032.2	High-temperature (nonoperating) life (sample plan).
1036.3	Intermittent operation life.
1037.2	Intermittent operation life (sample plan).
1038.3	Burn-in (for diodes, rectifiers, and zeners).
1039.4	Burn-in (for transistors).
1040	Burn-in (for thyristors (controlled rectifiers)).
1041.3	Salt atmosphere (corrosion).
1042.3	Burn-in and life test for power MOSFET’s or insulated gate bipolar transistors (IGBT).
1046.2	Salt spray (corrosion).
1048	Blocking life.
1049	Blocking life (sample plan).
1051.5	Temperature cycling (air to air).
1054.1	Potted environment stress test.
1055.1	Monitored mission temperature cycle.
1056.7	Thermal shock (liquid to liquid).
1061.1	Temperature measurement, case and stud.
1066.1	Dew point.
1071.5	Hermetic seal.
	Mechanical characteristics tests (2000 series).
2005.2	Axial lead tensile test.
2006	Constant acceleration.
2016.2	Shock.
2017.2	Die attach integrity.
2026.10	Solderability.
2031.2	Soldering heat.
2036.4	Terminal strength.
2037	Bond strength.
2046.1	Vibration fatigue.
2051.1	Vibration noise.
2052.2	Particle impact noise detection (PIND) test.
2056	Vibration, variable frequency.
2057.1	Vibration, variable frequency (monitored).
2066	Physical dimensions.
2068	External visual for nontransparent, glass-encased, double plug, noncavity, axial leaded diodes.
2069	Pre-cap visual, power MOSFET’s.
2070.1	Pre-cap visual microwave discrete and multichip transistors.
2071.3	Visual and mechanical examination.
2072.5	Internal visual transistor (pre-cap) inspection.
2073	Visual inspection for die (semiconductor diode).
2074.2	Internal visual inspection (discrete semiconductor diodes).

Numerical index of test methods - Continued.

Method no.	Title
	Mechanical characteristics tests (2000 series) - Continued.
2075	Decap internal visual design verification.
2076.2	Radiography.
2077.3	Scanning electron microscope (SEM) inspection of metallization.
2081	Forward instability, shock (FIST).
2082	Backward instability, vibration (BIST).
2101	DPA procedures for diodes.
	Electrical characteristics tests for bipolar transistors (3000 series).
3001.1	Breakdown voltage, collector to base.
3005.1	Burnout by pulsing.
3011.2	Breakdown voltage, collector to emitter.
3015	Drift.
3020	Floating potential.
3026.1	Breakdoun voltage, emitter to base.
3030	Collector to emitter voltage.
3036.1	Collector to base cutoff current.
3041.1	Collector to emitter cutoff current.
3051	Safe operating area (continuous de).
3052	Safe operating area (pulsed).
3053	Safe operating area (switching).
3061.1	Emitter to base cutoff current.
3066.1	Base emitter voltage (saturated or nonsaturated).
3071	Saturation voltage and resistance.
3076.1	Forward-current transfer ratio.
3086.1	Static input resistance.
3092.1	Static transconductance.
	Circuit-performance and thermal resistance measurements (3100 series).
3101.2	Thermal impedance testing of diodes.
3103	Thermal impedance measurements for insulated gate bipolar transistor (delta gate-emitter on voltage method).
3104	Thermal impedance measurements of GaAs MOSFET's (constant current forward-biased gate voltage method).
3105	Measurement method for thermal resistance of a bridge rectifier assembly.
3126	Thermal resistance (collector-cutoff-current method).
3131.2	Thermal impedance measurements for bipolar transistors (delta base-emitter voltage method).
3132	Thermal resistance (dc forward voltage drop, emitter base, continuous method).
3136	Thermal resistance (forward voltage drop, collector to base, diode method).
3141	Thermal response time.
3146.1	Thermal time constant.
3151	Thermal resistance, general.
3161	Thermal impedance measurements for vertical power MOSFET’s (delta source-drain voltage method).
3181	Thermal resistance for thyristors.
	Low frequency tests (3200 series).
3201.1	Small-signal short-circuit input impedance.
3206.1	Small-signal short-circuit forward-current transfer ratio.
3211	Small-signal open-circuit reverse-voltage transfer ratio.
3216	Small-signal open-circuit output admittance.
3221	Small-signal short-circuit input admittance.
3231	Small-signal short-circuit output admittance.
3236	Open circuit output capacitance.
3240.1	Input capacitance (output open-circuited or short-circuited).
3241	Direct interterminal capacitance.

Numerical index of test methods - Continued.

Method no.	Title
	Low frequency tests (3200 series) - Continued.
3246.1	Noise figure.
3251.1	Pulse response.
3255	Large signal power gain.
3256	Small signal power gain.
3261.1	Extrapolated unity gain frequency.
3266	Real part of small-signal short circuit input impedance.
	High frequency tests (3300 series)
3301	Small-signal short-circuit forward-current transfer-ratio cutoff frequency.
3306.3	Small-signal short-circuit forward-current transfer ratio.
3311	Maximum frequency of oscillation.
3320	RF power output, RF power gain, and collector efficiency.
	Electrical characteristics tests for MOS field-effect transistors (3400 series)
3401.1	Breakdown voltage, gate to source.
3403.1	Gate to source voltage or current.
3404	MOSFET threshold voltage.
3405.1	Drain to source on-state voltage.
3407.1	Breakdown voltage, drain to source.
3411.1	Gate reverse current.
3413.1	Drain current.
3415.1	Drain reverse current.
3421.1	Static drain to source on-state resistance.
3423	Small-signal, drain to source on state resistance.
3431	Small-signal; common-source, short-circuit, input capacitance.
3433	Wall-signal, common-source, short-circuit, reverse-transfer capacitance.
3453	Small-signal, common-source, short-circuit, output admittance.
3455	Small-signal, common-source, short-circuit, forward transadmittance.
3457	Small-signal, common-source, short-circuit, reverse transfer admittance.
3459	Pulse response (FET).
3461	Small-signal, common-source, short-circuit, input admittance.
3469	Repetitive unclamped inductive switching.
3470.2	Single pulse unclamped inductive switching.
3471.1	Gate charge.
3472.2	Switching time test.
3473.1	Reverse r. very time (t_{rr}) and recovered charge (Q_{rr}) for power MOSFET (drain-to-source) and power rectifiers which $t_{rr} \leq 100$ ns.
3474.1	Safe operating area for power NOSFET's or insulated gate bipolar transistors.
3475.1	Forward transconductance (pulsed dc method) of power MOSFET's or insulated gate bipolar transistors.
3476	Commutating diode for safe operating area test procedure for measuring dv/dt during reverse recovery of power MOSFET transistors or insulated gate bipolar transistors.
3477.1	Measurement of insulated gate bipolar transistor total switching losses and switching times.
3478.1	Power transistor electrical dose rate test method.
3479	Short circuit withstand time.
3490	Clamped inductive switching safe operating area for MOS gated power transistors.
	Electrical characteristics tests for Gallium Arsenide transistors (3500 series)
3501	Breakdown voltage, drain to source.
3505	Maximum available gain of a GaAs FET.
3510	1 dB compression point of a GaAs FET.
3570	GaAs FET forward gain (Mag S21).
3575	Forward transconductance.

Numerical index of test methods - Continued.

Method no.	Title
	Electrical characteristics tests for diodes (4000 series).
4000	Condition for measurement of diode static parameters.
4001.1	Capacitance.
4011.4	Forward voltage.
4016.3	Reverse current leakage.
4021.2	Breakdown voltage (diodes).
4022	Breakdown voltage (voltage regulators and voltage-reference diodes).
4023	Scope display.
4026.2	Forward recovery voltage and time.
4031.3	Reverse recovery characteristics.
4036.1	"Q" for voltage variable capacitance diodes.
4041.2	Rectification efficiency.
4046.1	Reverse current, average.
4051.3	Small-signal reverse breakdown impedance.
4056.2	Small-signal forward impedance.
4061.1	Stored charge.
4066.3	Surge current.
4071.1	Temperature coefficient of breakdown voltage.
4076.1	Saturation current.
4081.2	Thermal resistance of lead mounted diodes (forward voltage, switching method).
	Electrical characteristics tests for microwave diodes (4100 series)
4101.3	Conversion loss.
4102	Microwave diode capacitance.
4106	Detector power efficiency.
4111.1	Figure of merit (current sensitivity).
4116.1	IF impedance.
4121.2	Output noise ratio.
4126.2	Overall noise figure and noise figure of the IF amplifier.
4131.1	Video resistance.
4136.1	Standing wave ratio (SWR).
4141.1	Burnout by repetitive pulsing.
4146.7	Burnout by single pulse.
4151	Rectified microwave diode current.
	Electrical characteristics tests for thyristors (controlled rectifiers) (4200 series)
4201.2	Holding current.
4206.1	Forward blocking current.
4211.1	Reverse blocking current.
4216	Pulse response.
4219	Reverse gate current.
4221.1	Gate-trigger voltage or gate-trigger current.
4223	Gate-controlled turn-on time.
4224	Circuit-commutated turn-off time.
4225	Gate-controlled turn-off time.
4226.1	Forward "on" voltage.
4231.2	Exponential rate of voltage rise.
	Electrical characteristics tests for tunnel diodes (4300 series)
4301	Junction capacitance.
4306.1	Static characteristics of tunnel diodes.
4316	Series inductance.
4321	Negative resistance.
4326	Series resistance.
4331	Switching time.

Numerical index of test methods - Continued.

Method no.	Title
	High reliability space application tests (5000 class)
5001.1	Wafer lot acceptance testing.
5002	Capacitance-voltage measurements to determine oxide quality.
5010	Clean room and workstation airborne particle classification and measurement.

1000 Series

Environmental tests

METHOD 1001.1

BAROMETRIC PRESSURE (REDUCED)

1. Purpose. The purpose of this test is to check the device capabilities under conditions simulating the low pressure encountered in the nonpressurized portions of aircraft in high altitude flight.

2. Procedure. The device shall be tested in accordance with method 105, MIL-STD-202. In addition the following is required:

a. Twenty minutes before and during the test, the test temperature shall be +25°C ±3°C.

b. The specified voltage shall be applied and monitored over the range from atmospheric pressure to the specified minimum pressure and returned so that any device malfunctions, if they exist, will be detected.

3. Failure criteria. A device which exhibits arc-overs, harmful coronas, or any other defect or deterioration that may interfere with the operation of the device shall be considered a failure.

4. Summary. The following conditions must be specified in the detail specification:

a. Voltage (see 2.).

b. Minimum pressure (see 2.).

METHOD 1011

IMMERSION

1. The device shall be tested in accordance with method 104, MIL-STD-202.

METHOD 1015

STEADY-STATE PRIMARY PHOTOCURRENT IRRADIATION PROCEDURE (ELECTRON BEAM)

1. Purpose. This test procedure establishes the means for measuring the steady-state primary photocurrent (I_{pp}) generated in semiconductor devices when these devices are exposed to ionizing radiation. In this test method, the test device is irradiatd in the primary electron beam of a linear accelerator (LINAC).

1.1 Definitions. The following definitions shall apply for this test method.

1.1.1 Primary photocurrent (I_{pp}). The flow of excess charge carriers across a P-N junction due to ionizing radiation creating electron-hole pairs in the vicinity of the P-N junction.

1.1.2 Measurement interferences. A current measured in the test circuits that does not result from primary photocurrent (see appendix).

2. Apparatus.

2.1 Ionizing pulse source. The ionizing pulse shall be produced by an electron LINAC. The ionizing pulse shall have dose rate variations within ±15 percent of nominal during the pulse and shall consist of electrons with an energy equal to or greater than 10 MeV.

2.2 Pulse recording equipment. Pulse recording equipment shall be provided that will display and record both the photocurrent and the pulse-shape monitor signal. It may consist of oscilloscopes with recording cameras, appropriate digitizing equipment, or other approved recording equipment. The equipment shall have an accuracy and resolution of five percent of the pulse width and maximum amplitude of the ionizing source.

2.3 Test circuits. One of the following test circuits shall be selected, radiation-shielded, and close enough to the DUT in order to meet the requirements of 3.2.

2.3.1 Resistor sampling circuits. The resistor sampling circuits shall be as shown on figure 1015-1.

2.3.2 Current transformer circuit. The current transformer circuit shall be as shown on figure 1015-2.

2.4 Irradiation wise-sham monitor. One of the following devices shall be used to develop a signal proportional to the dose rate delivered to the OUT. Anytime constants which degrade the linear response of the monitor signal shall be less than 10 percent of the beam pulse width. The dose rate at the monitor shall be proportional to the dose rate at the DUT and the variation from proportionality shall not exceed ±3 percent.

2.4.1 Signal diode. The signal diode selected shall have a response that is linear within ±5 percent of the dose rate over the selected irradiation range. Depending on the sensitivity of the diode, it may be positioned at a point within the beam from the ionizing source at which it will remain in the linear region. The signal diode shall be placed in one of the test circuits described in 2.3, and it shall be back biased at not more than fifty percent of the diode breakdown voltage.

2.4.2 P-tree-intrinsic-N-type (P-I-N) diode. A P-I-N diode shall be used as stated in 2.4.1.

2.4.3 Current transformer. A transformer with a hollow central axis that shall be mounted around the output of the ionizing source.

2.4.4 Secondary-emission monitor. The secondary-emission monitor shall consist of a thin foil mounted in a chamber evacuated to $\leq$ .134 Pa (0.01 mmHg) which is located in the path of the beam from the ionizing source. The foil shall be biased negatively with respect to ground, or shielded with positively biased grids.

2.5 Dosimeter. The dosimeter shall be used to calibrate the output of the pulse-shape monitor in terms of dose rate. The dosimeter type shall be a commercial thermoluminescent detector (TLD), thin calorimeter or other system as specified. The dosimetry measurement technique shall be accurate to ±20 percent.

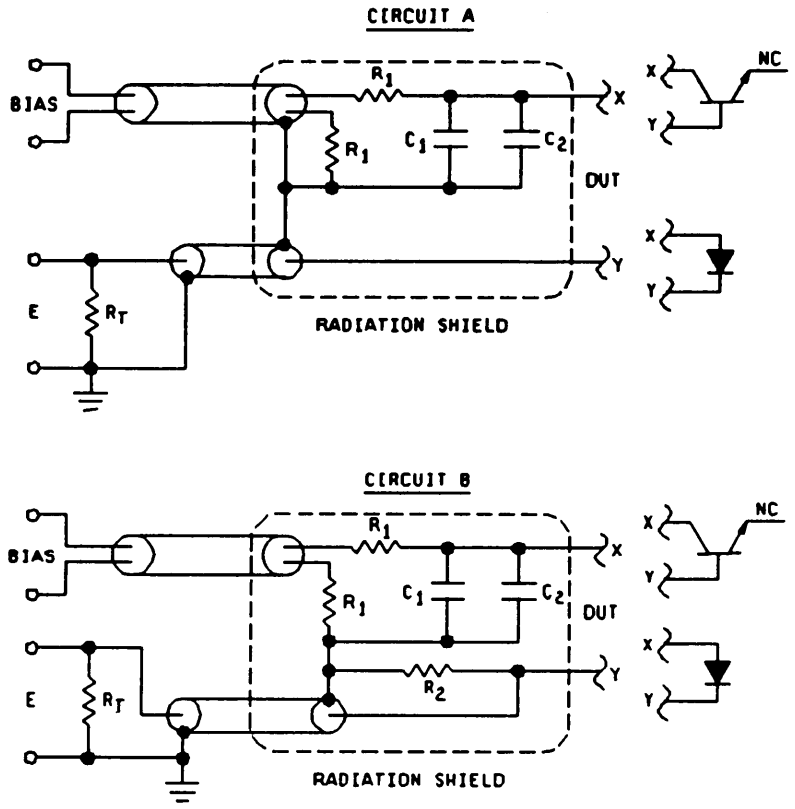

NOTES:

1. R_1 = 1,000 Ω, 5 percent.
2. R_2 = 5 Ω,, 1 percent.
3. C_1 = 15μF, 5 percent.
4. C_2 = .01 μF, 5 percent.
5. R_T = Characteristic termination for coaxial cable.
6. Circuit B shall be used for large photocurrents (those for which more than 10 percent of the bias appears across resistor R_T in circuit A).
7. Photocurrent for circuit A:

$$I_{PP} = \frac{\text{Steady-state signal (E)}}{\text{Cable termination } (R_T)}$$

8. Photocurrent for circuit B:

$$I_{PP} = \frac{[\text{Steady-state signal (E)}][\text{Cable termination } (R_T) + R_2]}{[\text{Cable termination}(R_T)][R_2]}$$

FIGURE 1015-1. Resistor sampling circuits.

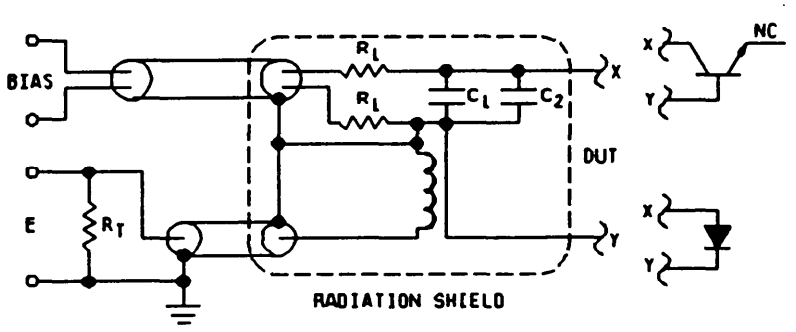

NOTES:

1. R_L = 1,000 Ω, 5 percent.
2. C_1 = 15 µF, 5 percent.
3. C_2 = .01 µF, 5 percent.
4. R_T = Characteristic termination for coaxial cable.
5. Photocurrent calculation:

$$I_{PP} = \frac{\text{Steady-state signal (E)}}{\text{Sensitivity of current transformer}}$$

FIGURE 1015-2. Current transformer circuit.

3. Procedure.

3.1 General. The test facility shall select a test fixture and pulse shape monitor. The test fixture and monitor shall be aligned with the beam from the ionizing source. In addition, any shielding, collimation, or beam scattering equipment shall be properly positioned. If repositioning of any equipment or the test circuit is required to accomplish the device testing, the repositioning shall be demonstrated to be reliable and repeatable.

3.2 Test circuit check-out. The ionizing source shall be pulsed either with an empty device package or without the DUT in the test circuit and with all required bias applied. The ionizing source shall be adjusted to supply the dose rate required for this test. The recorded current from the pulse recording equipment shall be no more than 10 percent of the steady-state photocurrent expected to be measured for this test (see 3.4.3). If this condition is not met, see appendix.

3.3 Ionizing source calibration. Mount the selected dosimeter in place of the DUT. Pulse the ionizing source, record the pulse-shape monitor signal, and determine the radiation dose measured by the dosimeter. Calculate a dose rate factor as follows:

$$\text{Dose rate factor} = \frac{\text{Measured dosimeter dose [rad(Si)]}}{\text{Integrated pulse shape monitor signal (volts x seconds)}}$$

This measurement shall be repeated five times, and the average of the six dose rate factors obtained shall be the dose rate factor used for the test. One dosimeter may be used repetitively if the dose is read for each pulse.

3.4 Device test.

3.4.1 Mounting. Mount the DUT in the beam from the ionizing source and connect it to the rest of the test circuit. The bias applied shall be as specified in the device specification; or if not specified, the bias shall be fifty percent of the specified breakdown voltage of the DUT.

3.4.2 Dose rate. Either adjust the ionizing source beam current or use an alternate method (i.e., scatterers or a different sample location) to obtain the specified dose rate ±20 percent. Pulse the ionizing source and record the pulse-shape monitor signal and the photocurrent signal from the DUT.

3.4.3 Calculate photocurrent. The steady-state photocurrent shall be calculated as expressed on the figure selected for the test circuit in 2.3.

3.4.4 Verify test circuit. Check the current recorded in the test circuit in 3.2 and verify that the value of the current does not exceed 10 percent of the photocurrent recorded in 3.4.3.

3.5 Test circuit checkout. Repeat the device test (see 3.4) for each dose rate that is required by the device specification. The calibration (see 3.3) shall be performed for each dose rate to be tested. The test circuit checkout (see 3.2) shall be performed when a new device type is tested or when any change is made in the position of the test circuit or DUT supporting structure.

4. Summary. The following conditions shall be specified in the detail specification:

a. The pulse width requirements of the ionizing pulse source. (The pulse width must exceed the semiconductor minority lifetime by at least a factor of 2.)

b. The bias applied to the device (see 3.4.1).

c. The irradiation dose rate(s) applied (see 3.4.2).

d. When required, any total dose restrictions.

e. When required, a description of the placement of the device in the beam with respect to the junction.

f. When required, for multi-junction devices, the device terminals that are to be monitored.

g. When required, the procedure for approval of the test facility and dosimetry.

APPENDIX

MEASUREMENT INTERFERENCES

The following problems commonly arise when electronics are tested in a radiation environment. Most of these interferences are present when the test circuit is irradiated under bias with the DUT removed.

1. Air ionization.

The irradiation pulse can ionize the air around the test circuit and provide a spurious conduction path. The air ionization contribution to the signal is proportional to the applied bias. The effect of air ionization is minimized by reducing the circuit components exposed to the beam pulse, by coating exposed leads with a thick nonconducting layer or by performing the test in a vacuum.

2. Secondary emission.

The beam pulse irradiating any electrical lead or component can cause a net charge to enter or leave the exposed surfaces. This spurious current alters the measured photocurrent. Secondary emission effects are reduced by minimizing the circuit components exposed to the direct beam.

3. Perturbed irradiation field.

Any material exposed to the beam pulse will scatter and modify the incident radiation of the beam. A nearby DUT or dosimeter will then be exposed to a noncharacterized and unexpected form of radiation. These field perturbations are reduced by minimizing the mass of the structure supporting the DUT and the dosimeter that is exposed to the beam. All materials should have a low atomic number; e.g., plastics and aluminum.

4. RF pickup.

The ionizing pulse source discharges large amounts of electromagnetic energy at the same time the photocurrent is being measured. Good electrical practice is necessary to eliminate resonant structure, noise pick-up on signal cables, common mode pick-up, ground loops, and similar interferences.

METHOD 1016

INSULATlON RESISTANCE

1. The device shall be tested in accordance with method 302, MIL-STD-202.

METHOD 1017.1

NEUTRON IRRADIATION

1. Purpose. The neutron irradiation test is performed to determine the susceptibility of discrete semiconductor devices to degradation in the neutron environment. This test is destructive. Objectives of the test are:

a. To detect and measure the degradation of critical semiconductor device electrical characteristics as a function of neutron fluence.

b. To determine if specified semiconductor device electrical characteristics are within specified limits after exposure to a specified level of neutron fluence (see 4).

2. Apparatus.

2.1 Test instruments. Test instrumentation to be used in the radiation test shall be standard laboratory electronic test instruments such as power supplies, digital voltmeters and picoammeters, capable of measuring the electrical parameters required. Parameter test methods and calibration shall be in accordance with MIL-STD-750.

2.2 Radiation source. The radiation source used in the test shall be in a TRIGA Reactor or a Fast Burst Reactor. Operation may be in either pulse or steady-state repetitive pulse conditions as appropriate. The source shall be one that is acceptable to the acquiring activity.

2.3 Dosimetry equipment.

a. Fast-neutron threshold activation foils such as ^{32}S, ^{54}Fe, and ^{58}Ni.

b. CaF_2 TLD.

c. Appropriate activation foil counting and TLD readout equipment.

2.4 Dosimetry measurements.

2.4.1 Neutron fluence. The neutron fluence used for device irradiation shall be obtained b measuring the amount of radioactivity induced in a fast-neutron threshold activation foil such as ^{32}S, ^{54}Fe, or ^{58}Ni, irradiated simultaneously with the device. A standard method for converting the measured radioactivity in the specific activation foil employed into a neutron fluence is given in the following Department of Defense adopted ASTM standards:

E263	Standard Test Method for Measuring Fast-Neutron Flux by Radioactivation of Iron.
E264	Standard Test Method for Measuring Fast-Neutron Flux by Radioactivation of Nickel.
E265	Standard Test Method for Measuring Fast-Neutron Flux by Radioactivation of Sulfur.

The conversion of the foil radioactivity into a neutron fluence requires a knowledge of the neutron spectrum incident on the foil. If the spectrum is not known, it shall be determined by use of the following DOD adopted ASTM standards, or their equivalent:

E720	Standard Guide for Selection of a Set of Neutron-Activation Foils for Determining Neutron Spectra used in Radiation-Hardness Testing of Electronics.
E721	Standard Method for Determining Neutron Energy Spectra with Neutron-Activation Foils for Radiation-Hardness Testing of Electronics.
E722	Standard Practice for Characterizing Neutron Energy Fluence Spectra in Terms of an Equivalent Monoenergetic Neutron Fluence for Radiation-Hardness Testing of Electronics.

Once the neutron energy spectrum has been determined and the equivalent monoenergetic fluence calculated, then an appropriate monitor foil (such as ^{32}S, ^{54}Fe, or ^{58}Ni) should be used in subsequent irradiations to determine the neutron fluence as discussed in E722. Thus, the neutron fluence is described in terms of the equivalent monoenargetic neutron fluence per unit monitor response. Use of a monitor foil to predict the equivalent monoenargetic neutron fluance is valid only if the energy spectrum remains constant.

2.4.2 If absorbed dose measurements of the gems-ray component during the device test irradiations are required, then such measurements shall be made with CaF_2 TLDs, or their equivalent. These TLDs shall be used in accordance with the recommendations of the following DOD adopted ASTM standard:

E668 Standard Practice for the Application of Thermoluminescence-Dosimetry (TLD) Systems for Determining Absorbed Dose in Radiation-Hardness Testing of Electronic Devices.

3. Procedure.

3.1 Safety requirements. Neutron irradiated parts may be radioactive. Handling and storage of test specimens or equipment subjected to radiation environments shall be governed by the procedures established by the local Radiation Safety Officer or Health Physicist.

NOTE: The receipt, acquisition, possession, use, and transfer of this material after irradiation is subject to the regulations of the U.S. Nuclear Regulatory Commission, Radioisotope License Branch, Washington, DC 20555. A by-product license is required before an irradiation facility will expose any test devices. (U.S. Code, see 10 CFR 30-33.)

3.2 Test samples. Unless otherwise specified, a test sample shall be randomly selected and consist of a minimum of 10 parts. All sample parts shall have met all the requirements of the governing specification for that part. Each part shall be serialized to enable pre and post test identification and comparison.

3.3 Pre-exposure.

3.3.1 Electrical tests. Pre-exposure electrical tests shall be performed on each part as required. Where delta parameter limits are specified, the pre-exposure data shall be recorded.

3.3.2 Exposure set-up. Each device shall be mounted unbiased and have its terminal leads either all shorted or all open. For MOS devices all leads shall be shorted. An appropriate mounting fixture which will accommodate both the sample and the required dosimeters (at least one actuation foil and one CaF_2 TLD) shall be used. The configuration of the mounting fixture will depend on the type of reactor facility used and should be discussed with reactor facility personnel. Test devices shall be mounted such that the total variation of fluence over the entire sample does not exceed 20 percent. Reactor facility personnel shall determine both the position of the fixture and the appropriate pulse level or power time product required to achieve the specified neutron fluence level.

3.4 Exposure. The test devices and dosimeters shall be exposed to the neutron fluence as specified. The exposure level may be obtained by operating the reactor in either the pulsed or power mode. If multiple exposures are required, the post-irradiation electrical tests shall be performed (see 3.5.1) after each exposure. A new set of dosimeters are required for each exposure level. Since the effects of neutrons are cumulative, each additional exposure level will have to be determined to give the specified total accumulated fluence. All exposures shall be made at +20°C ±lO°C and shall be correlated to a 1 MeV equivalent fluence.

3.5 Post-exposure.

3.5.1 Electrical tests. Test devices shall be removed only after clearance has been obtained from the health physicist at the test facility. The temperature of the sample devices shall be maintained at +20°C ±10°C from the time of the exposure until the post-electrical tests are made. The post-exposure electrical tests shall be made within 24 hours after the completion of the exposure. If the residual radioactivity level determined by the local radiation safety officer is too high for device handling purposes, the elapsed time before post-test electrical measurements are made shall be extended to 1 week or remote testing shall be utilized. All required data must be recorded for each device after each exposure.

3.5.2 Failure analysis. Devices which exhibit anomalous behavior (e.g., non-linear degradation of 1/ß) shall be subjected to failure analysis.

3.6 Reporting. In reporting the results of radiation tests on discrete devices, adequate identification of the devices is essential. As a minimum, the report shall include the device type number, serial number, the manufacturer, controlling specification, the date code, and other Part or Identifying Numbers (PINs) provided by the manufacturer. Each data sheet shall include radiation test date, electrical test conditions, radiation test levels, and ambient conditions as well as the test data. When other than specified electrical test circuits are employed, the parameter measurement circuits shall accompany the data. Any anomalous incidents during the test shall be fully explained in footnotes to the data.

4. Summary. The following conditions shall be specified in the request for test or when applicable, the detail specification:

a. Device types.

b. Quantities of each device type to be tested if other than specified in 3.2.

c. Electrical parameters to be measured in pre- and post-exposure tests.

d. Criteria for pass, fail, record actions on tested devices.

e. Criteria for anomalous behavior designation.

f. Radiation exposure levels.

g. Test instrument requirements.

h. Radiation dosimetry requirements if other than 2.3.

i. Ambient temperature if other than specified herein.

j. Requirements for data reporting and submission, where applicable.

METHOD 1018

INTERNAL WATER-VAPOR CONTENT

1. Purpose. The purpose of this test is to measure the water-vapor content of the atmosphere inside a metal or ceramic hermetically-sealed device. It can be destructive (procedures 1 and 2) or nondestructive (procedure 3).

2. Apparatus. The apparatus for the internal water-vapor content test shall be as follows for the chosen procedure.

2.1 Procedure 1. (Procedure 1 measures the water-vapor content of the device atmosphere by mass spectrometry.) The apparatus for procedure 1 shall consist of:

a. A mass spectrometer capable of reproducibly detecting the specified moisture content for a given volume package with a factor of 10 sensitivity safety margin (i.e., for a specified limit of 5,000 ppmv, .01 cc, the mass spectrometer shall demonstrate a 500 ppmv or less absolute sensitivity to moisture for a package volume of .01 cc). The smallest volume shall be considered the worst case. The calibration of the mass spectrometer shall be accomplished at the specified moisture limit (±20 percent) using a package simulator which has the capability of generating at least three known volumes of gas ±10 percent on a repetitive basis by means of a continuous sample volume purge of known moisture content ±10 percent. Moisture content shall be established by the standard generation techniques (i.e., 2 pressure, divided flow, or cryogenic method). The absolute moisture shall be measured by an NIST calibrated moisture dew point analyzer at least once every two years. The NIST calibrated dew pointer shall be returned to the National Institute of Standards Technology at least once each year for recalibration. Calibration records shall be kept on a daily basis and made available to DCAS personnel. Gas analysis results obtained by this method shall be considered valid only in the moisture range or limit bracketed by at least two (volume or concentration) calibration points (i.e., 5,000 ppmv between .01 - .1 cc or 1,000 - 5,000 ppmv between .01 - .1 cc). A best fit curve shall be used between volume calibration points. Corrections of sensitivity factors deviating greater than 10 percent from the mean between calibration points shall be required.

b. A vacuum opening chamber which can contain the device and a vacuum transfer passage connecting the device to the mass spectrometer of 2.1a. The transfer passage shall be maintained at +125°C ±5°C. The fixturing in the vacuum opening chamber shall position the specimen as required by the piercing arrangement of 2.1c, and maintain the device at +lOO°C ±5°C for a minimum of 10 minutes prior to piercing.

c. A piercing arrangement functioning within the opening chamber or transfer passage of 2.1b, which can pierce the specimen housing (without breaking the mass spectrometer chamber vacuum and without disturbing the package sealing medium), thus allowing the specimen's internal gases to escape into the chamber and mass spectrometer.

NOTE: A sharp-pointed piercing tool, actuated from outside the chamber wall via a bellows to permit movement, should be used to pierce both metal and ceramic packages. For ceramic packages, the package lid or cover should be locally thinned by abrasion to facilitate localized piercing.

2.2 Procedure 2. (Procedure 2 measures the water-vapor content of the device atmosphere by integrating moisture picked up by a dry carrier gas at +50°C.) The apparatus for procedure 2 shall consist of:

a. An integrating electronic detector and moisture sensor capable of reproducibly detecting a water-vapor content of 300 ±5O ppmv moisture for the package volume being tested. This shall be determined by dividing the absolute sensitivity in micrograms H_2O by the computed weight of the gas in the DUT, and then correcting to ppmv.

b. A piercing chamber or enclosure, connected to the integrating detector of 2.2a, which will contain the device specimen and maintain its temperature at +1000°C ±5°C during measurements. The chamber shall position the specimen as required by the piercing arrangement. The piercing mechanism shall open the package in a manner which will allow the contained gas to be purged out by the carrier gas or removed by evacuation. The sensor and connection to the piercing chamber will be maintained at a temperature of +50°C ±2°C.

2.3 Procedure 3. (Procedure 3 measures the water-vapor content of the device atmosphere by measuring the response of a calibrated moisture sensor or an IC chip which is sealed within the device housing, with its electrical terminals available at the package exterior.) The apparatus for procedure 3 shall consist of one of the following:

a. A moisture sensor element and readout instrument capable of detecting a water-vapor content of 300 ±5O ppmv while sensor is mounted inside a sealed device.

b. Metallization runs on the OUT isolated by back-biased diodes which when connected as part of a bridge network can detect 2,000 ppmv within the cavity. The chip shall be cooled in a manner such that the chip surface is the coolest surface in the cavity. The device shall be cooled below dew point and then heated to room temperature as one complete test cycle.

NOTE: Suitable types of sensors may include (among others) parallel or interdigitated metal stripes on an oxidized silicon chip, and porous anodized-aluminum structures with gold-surface electrodes.

Surface conductivity sensors may not be used in metal packages without external package wall insulation. When used, the sensor shall be the coolest surface in the cavity. It should be noted that some surface conductivity sensors require a higher ionic content than available in ultraclean CERDIP packages. In any case, correlation with mass spectrometer procedure 1 shall be established by clearly showing that the sensor reading can determine whether the cavity atmosphere has more or less than the specified moisture limit at +100°C.

3. Procedure. The internal water-vapor content test shall be conducted in accordance with the requirements of procedure 1, procedure 2, or procedure 3. Devices containing desiccants or organics shall be prebaked for 12 to 24 hours at +lOO°C ±5°C prior to hot insertion into apparatus.

3.1 Procedure 1. The device shall be hermetic in accordance with test method 1014, and free from any surface contaminants which may interfere with accurate water-vapor content measurement.

After device insertion, the device and chamber shall be pumped down and baked out at a temperature of +100°C ±5°C until the background pressure level will not prevent achieving the specified measurement accuracy and sensitivity. After pumpdown, the device case or lid shall be punctured and the following properties of the released gases shall be measured, using the mass spectrometer:

a. The increase in chamber pressure as the gases are released by piercing the device package. A pressure rise of less than 50 percent of normal for that package volume and pressurization may indicate that (1) the puncture was not fully accomplished, (2) the device package was not sealed hermetically, or (3) does not contain the normal internal pressure.

b. The water-vapor content of the released gases, as a proportion (by volume) of the total gas content.

c. The proportions (by volume) of the other following gases: N_2, He, Mass 69 (fluorocarbons), O_2, Ar, H_2, $C0_2$, CH_4, and other solvents, if available, in the order stated. Calculations shall be made and reported on all gases present greater than one percent by volume. Data reduction shall be performed in a manner which will preclude the cracking pattern interference from other gas specie in the calculations of moisture content. Data shall be corrected for any system dependent matrix effects such as the presence of hydrogen in the internal ambient.

3.1.1 Failure criteria.

a. A device which has a water-vapor content greater than the specified maximum value shall constitute a failure.

b. A device which exhibits an abnormally low total gas content, as defined in 3.1a, shall constitute a failure, if it is not replaced. Such a device may be replaced by another device from the same population; if the replacement device exhibits normal total gas content for its type, neither it nor the original device shall constitute a failure for this cause.

c. Data analysis on devices containing desiccants or organics shall be terminated after 95 percent of the gas has been analyzed in a dynamic measurement system or data shall be taken after pressure has stabilized for a period of two minutes in a static system or in any manner which approaches the true measurement of ambient moisture in equilibrium at +100°C within the cavity.

3.2 Procedure 2. The device shall be hermetic in accordance with test method 1014, and free from any surface contaminants which may interfere with accurate water-vapor content measurement.

After device insertion into the piercing chamber, gas shall be flowed through the system until a stable base-line value of the detector output is attained. With the gas flow continuing, the device package shall then be pierced so that a portion of the purge gas flows through the package under test and the evolved moisture integrated until the base-line detector reading is again reached. An alternative allows the package gas to be transferred to a holding chamber which contains a moisture sensor and a pressure indicator. System is calibrated by injecting a known quantity of moisture or opening a package of known moisture content.

3.2.1 Failure criteria.

a. A device which has a water-vapor content (by volume) greater than the specified maximum value shall constitute a failure.

b. After removal from the piercing chamber, the device shall be inspected to ascertain that the package has been fully opened. A device package which was not pierced shall constitute a failure, if the test is not performed on another device from the same population; if this retest sample or replacement is demonstrated to be pierced and meets the specified water-vapor content criteria, the specimen shall be considered to have passed the test.

c. A package which is a leaker in the purge case will be wet and counted as a failure. In the case of evacuation, a normal pressure rise shall be measured as in 3.1a.

3.3 Procedure 3. The moisture sensor shall be calibrated in an atmosphere of known water-vapor content, such as that established by a saturated solution of an appropriate salt or dilution flow stream. It shall be demonstrated that the sensor calibration can be verified after package seal or that post seal calibration of the sensor by lid removal is an acceptable procedure.

The moisture sensor shall be sealed in the device package or, when specified, in a dummy package of the same type. This sealing shall be done under the same processes, with the same die attach materials and in the same facilities during the same time period as the device population being tested.

The water-vapor content measurement shall be made, at +100°C or below, by measuring the moisture sensor response. Correlation with procedure 1 shall be accomplished before suitability of the sensor for procedure 3 is granted. It shall be shown the package ambient and sensor surface are free from any contaminating materials such as organic solvents which might result in a lower than usual moisture reading.

3.3.1 Failure criteria. A specimen which has a water-vapor content greater than the specified maximum value shall constitute a failure.

4. Implementation. Suitability for performing method 1018 analysis is granted by the qualifying activity for specific limits and volumes. Method 1018 calibration procedures and the suitability survey are designed to guarantee ±2O percent lab-to-lab correlation in making a determination whether the sample passes or fails the specified limit. Water vapor contents reported either above or below the (water vapor content - volume) range of suitability are not certified as correlatable values. This out of specification data has meaning only in a relative sense and only when one laboratory's results are being compared. Suitability status has been granted for a specification limit of 5,000 ppmv and package volumes falling between .01 cc and .85 cc. The range of suitability for each laboratory will be extended by the qualifying activity when the analytical laboratories demonstrate an expanded capability. Information on current analytical laboratory suitability status can be obtained by writing DESC/ELST, Dayton, OH 45440.

5. Summary. The following details shall be specified in the applicable acquisition document:

a. The procedure (1, 2, or 3) when a specific procedure is to be used (see 3.).

b. The maximum allowable water-vapor content falling within the range of suitability as specified in test method 5005, 5008, or 5010.

METHOD 1019.4

STEADY-STATE TOTAL DOSE IRRADIATION PROCEDURE

1. Purpose. This test procedure defines the requirements for testing discrete packaged semicontductor devices for total dose effects by ionizing radiation from a Cobalt-60 (60_{Co}) game ray source. This procedure includes only steady-state irradiations, and is not applicable to pulse type irradiations. This test may produce severe degradation of the electrical properties of irradiated devices.

1.1 Definitions. Definitions of terms used in this procedure are given below:

a. In-flux tests: Electrical measurements made on devices during radiation exposure.

b. Not in-flux tests: Electrical measurements made on devices at any time other than during irradiation.

c. Remote tests: Electrical measurements made on devices which are physically removed from the irradiation location for the measurements.

d. Ionizing radiation effects: The changes in the electrical parameters of a device or integrated circuit results from radiation-induced charge. It is also referred to as total dose effects.

2. Apparatus. The apparatus shall consist of the radiation source, electrical test instrumentation, test circuit board(s), cable, interconnect board or switching system, if used, and appropriate dosimetry measurement system, if used. Adequate precautions shall be observed to obtain an electrical measurement system with sufficient insulation, ample shielding, satisfactory grounding, and with suitable low noise from the main power supply.

2.1 Radiation source. The radiation source used in the test shall be the uniform field of a Cobalt-60 gamma ray source. Unless otherwise specified, uniformity of the radiation field in the volume where devices are irradiated shall be ±10 percent as measured by the dosimetry system. Changes in geometry from one test to another require remeasurement of the field uniformity.

2.1.1 Cobalt-60 source. The gamma ray field of a Cobalt-60 source shall be calibrated at least every three years to an uncertainty of no more than ±5 percent as measured with an appropriate dosimetry system whose calibration is traceable to the NIST. Corrections for Cobalt-60 source decay shall be made monthly.

2.2 Dosimetry system. The gamma ray field of the radiation source shall be characterized by appropriate dosimetry (traceable to NIST) methods prior to irradiation of test devices. The following DoD adopted American Society for Testing and Materials (ASTM) standards or their equivalents shall be used:

ANSI/ASTM E 666	-	Standard Method for Calculation of Absorbed Dose from Gamma or X Radiation.
ANSI/ASTM E 66	-	Standard Practice for the Application of Thermoluminescence-Dosimetry (TLD) Systems for Determining Absorbed Dose in Radiation-Hardness Testing of Electronic Devices.
ASTM E 1250	-	Standard Method for Application of Ionization Chambers to Assess the Low Energy Gamma Component of Cobalt 60 Irradiators Used in Radiation Hardness Testing of Silicon electronic Devices.
ASTM E 1275	-	Standard Practice for Use of a Radiochromic Film Dosimetry System.
ASTM E 1249	-	Minimizing Dosimetry Errors in Radiation Hardness Testing of Silicon Electronic Devices.

These industry standards address the conversion of absorbed dose from one material to another and the proper use of various dosimetry systems. 1/

1/ Copies may be obtained from ASTM, 1916 Race Street, Philadelphia, PA 19103.

2.3 Electrical test instruments. All instrumentation used for electrical measurements shall have stability, accuracy, and resolution required for accurate measurement of the electrical parameters. Any instrumentation required to operate in a radiation environmant above 10 REM per hour shall be appropriately shielded, or the radiation level must be less than the instrumentation manufacturers recommanded manimum.

2.4 Test circuit board(s). Devices to be irradiated shall be mounted on or connected to circuit boards together with any associated circuitry necessary for device biasing during irradiation or for in-site measurements. Unless otherwise specified, all device input terminals and any others which may affect the radiation response shall be electrically connected during irradiation, i.e., not left floating. The geometry and materials of the completed board shall allow uniform irradiation of the DUTs. Good design and construction practices shall be used to prevent oscillations, minimize leakage currents, prevent electrical damage, and obtain accurate measurements. All apparatus used repeatedly in radiation fields shall be checked periodically for physical or electrical degradation. Components which are placed on the test circuit board, other than OUTS, shall be insensitive to the accumulated radiation, or they shall be shielded from the radiation test fixtures, shall be made in such a way that materials will not disturb the uniformity of the radiation field intensity at the DUT.

2.5 Interconnect or switching system. This system shall be locatd external to the radiation environment location, and provides the interface between the test instrumentation and the DUTs. It is part of the entire test system and subject to the limitation specified in 2.4 for leakage between terminals.

3. Procedure. The test devices shall be irradiated as specified by a test plan. This plan shall specify the device description, radiation conditions, device bias conditions, dosimetry system operating conditions and measurements, and conditions.

3.1 Sample selection. Unless otherwise specified, the test samples shall be randomly selected from the parent population and identically packaged. Each part shall be individually identifiable to enable pre- and postirradiation comparison. For device types which are ESD-sensitive, proper handling techniques shall be used to prevent damage to the devices. Only devices which have passed the electrical specification as defined in the test plan shall be submitted to radiation testing.

3.2 Dosimetry measurements. The radiation field intensity at the location of the OUT shall be determined prior to testing by dosimetry or by source decay correction calculations, as appropriate, to assure conformance to test level and uniformity requirements. The dose to the DUT shall be determined one of two ways: (1) by measurement during the irradiation with an appropriate dosimeter, or (2) by correcting a previous dosimetry value for the decay of the Co 60 source intensity in the intervening time. Appropriate correction shall be made to convert the measured or calculated dose in the dosimeter material to the dose in the DUT.

3.3 Lead/aluninum (Pb/A1) container. Test specimens shall be enclosed in a Pb/A1 container to minimize dose enhancement effects caused by low-energy, scattered radiation. A minimum of 1.5 mm Pb, surrounding an inner shield of at least 0.7 mm A1, is required. This Pb/A1 container produces an approximate charged particle equilibrium for S1 and for TLDs such as CaF_2. The radiation field intensity shall be measured inside the Pb/A1 container (1) initially, (2) when the source is changed, or (3) when the orientation of configuration of the source, container, or test-fixture is changed. This measurenent shall be performed by placing a dosimeter (e.g.. a TLD) in the device-irradiation container at the approximate test-device position. If it can be demonstrated that low-energy scattered radiation is small enough that it will not cause dosimetry errors due to dose enhancement, the Pb/A1 container may be omitted.

3.4 Radiation level(s). The test devices shall be irradiated to the dose level(s) specified in the test plan within ±10 percent. If multiple irradiations are required for a set of test devices, then the postirradiation electrical parameter measurements shall be performed after each irradiation.

3.5 Radiation dose rate.

3.5.1 Condition. The dose-rate range shall be between 50 and 2,000 rads (Si)/s (0.5 and 20 Gy(Si)/s) for 60 Co. 2/ The dose rates maybe different for each radiation dose level in a series; however, the dose rate shall not vary by more than ±10 percent during each irradiation.

2/ The SI unit for the quantity absorbed dose is the gray, symbol Gy. 100 rad = 1 Gy.

3.5.2 Condition B. As an alternative, the test may be performed at the dose rate of the intended application, if this is agreed to by the acquisition activity.

3.6 Temperature requirements. Since radiation effects are temperature dependent, DUTs shall be irradiated in an ambient temperature of +24°C ±6°C as measured at a point in the test chamber in close proximity to the test fixture. The electrical measurements shall be performed in an ambient temperature of +25°C ±5°C. If devices are transported to and from a remote electrical measurement site, the temperature of the test devices shall not be allowed to increase by more than +10°C from the irradiation environment. If any other temperature range is required, it shall be specified.

3.7 Electrical performance measurements. The electrical parameters to remeasured and functional tests to be performed shall be specified in the test plan. As a check on the validity of the measurement system and pre- and postirrediation data, at least one control sample shall be measured using the operating conditions provided in the governing device specifications. For automatic test equipment (ATE), there is no restriction on the test sequence provided that the rise in the device junction temperature is minimized. For manual measurements, the sequence of parameter measurements shall be chosen to allow the shortest possible measurement period. When a series of measurements is made, the tests shall be arranged so that the lowest power dissipation in the device occurs in the earliest measurements and the power dissipation increases with subsequent measurements in the sequence. The pre- and postirradiation electrical measurements shall be done on the same measurement system and the same sequence of measurements shall be maintained for each series of electrical measurements of devices in a test sample. Pulse-type measurements of electrical parameter should be used as appropriate to minimize heating and subsequent annealing effects.

3.8 Test conditions The use of in-flux or not in-flux shall be specified in the test plan. (This may depend on the intended application for which the data is being obtained.) The use of in-flux testing may help to avoid variations introduced by postirradiation time dependent effects. However, errors may be incurred for the situation where a device is irradiated in-flux with static bias, but where the electrical testing conditions require the use of dynamic bias for a fraction of the total irradiation period. Not-in-flux testing generally allows for more comprehensive electrical testing, but can be misleading if significant postirradiation time dependent effects occur.

3.8.1 In-flux testing. Each test device shall be checked for operation within specifications prior to being irradiated. After the entire system is in place for the in-flux radiation test, it shall be checked for proper interconnections, leakage (see 2.4), and noise level. To assure the proper operation and stability of the test setup, a control device with known parameter values shall be measured at all operational conditions called for in the test plan. This measurement shall be done either before the insertion of test devices or upon completion of the irradiation after removal of the test devices or both.

3.8.2 Remote testing. Unless otherwise specified, the bias shall be removed and the device leads placed in conductive foam (or similarly shorted) during transfer from the irradiation source to a remote tester and back again for further irradiation. This minimizes postirradiation time dependent effects.

3.8.3 Bias and loading conditions. Bias conditions for test devices during irradiation shall be within ±5 percent of those specified by the test plan. (If known, the bias applied to the test devices shall be selected to produce the greatest radiation induced damage or the worst-case damage for the intended application.) The specified bias shall be maintained on each device in accordance with the test plan. Bias shall be checked immediately before and after irradiation. Care shall be taken in selecting the loading such that the rise in the junction temperature is minimized.

3.9 Postirradiation procedure. Unless otherwise specified, the following time intervals shall be observed:

a. The time from the end of an irradiation to the start of electrical measurements shall be a maximum of one hour.

b. The time to perform the electrical measurements and to return the devices for a subsequent irradiation, if any, shall be within two hours of the end of the prior irradiation.

To minimize time dependent effects, these intervals shall be as short as possible. The sequence of parameter measurements shall be maintained constant through the test series.

3.10 Test report. As a minimum, the report shall include the device type number, CAGE code of the manufacturer, package type, controlling specification, date code, and any other PINs given by the manufacturers, the bias conditions during-radiation, the radiation level; time, temperature, and the pre- and postradiation recorded readings. The following information is available on request only and is not requirement for the report:

a. Each data work sheet shall include the test date, the radiation source used, the bias conditions during irradiation, the ambient temperature around the devices during irradiation and electrical testing, the duration of each irradiation, the time between irradiation and the start of the electrical measurements, the duration of the electrical measurements, and the time to the next irradiation when step irradiations are used, the irradiation dose rate, electrical test conditions, dosimetry systm and procedures, and the radiation test levels. The pre- and postirrediation data shall be recorded for each part and retained with the parent population data in accordance with the requirements of MIL-S-195O0. Any anomalous incidents during the test shall be fully docmented and reported.

b. The bias circuit, parameter measurements circuits, the layout of the test apparatus with details of distances and materials used, and electrical noise and current leakage of the electrical measurement system for in-flux testing, shall be reported using drawings or diagrams as appropriate.

4. Summary. The following details shall be specified in the applicable acquisition document as required.

a. Device-type number(s), quantity, and governing specification (see 3.1).

b. Radiation dosimetry requirements (see 3.2).

c. Radiation test levels including dose and dose rate (see 3.4 and 3.5).

d. Irradiation, electrical test, and transport temperature; if other than as specified in 3.6.

e . Electrical parameters to be measured and device operating conditions during measurement (see 3.7).

f. Test conditions, i.e., in-flux or not-in-flux type tests (see 3.8).

g. Bias conditions for devices during irradiation (see 3.8.3).

h. Time intervals of the postirradiation measurements (see 3.9).

i. Documentation required to be delivered with devices (see 3.10).

METHOD 1020.2

ELECTROSTATIC DISCHARGE SENSITIVITY (ESDS) CLASSIFICATION

1. Purpose. This method establishes the procedure for classifying semiconductors according to their susceptibility to damage or degradation by exposure to electrostatic discharge (ESD). This classification is used to specify appropriate packaging and handling requirements in accordance with MIL-S-19500, and to provide classification data to meet the requirements of DOD-STD-1686.

1.1 Definitions. The following definitions shall apply for the purposes of this test method.

1.1.1 ESD. A transfer of electrostatic charge between two bodies at different electrostatic potentials.

2. Apparatus.

2.1 Test apparatus. ESD pulse simulator and DUT socket equivalent to the circuit of figure 1020-1, and capable of supplying pulses with the characteristics required by figure 1020-2.

2.2 Measurement equipment. Equipment including an oscilloscope and current probe to verify conformance of the simulator output pulse to the requirements of figure 1020-2.

2.2.1 Oscilloscope and amplifler. The oscilloscope and amplifier combination shall have a 350 MHz minimum bandwidth and a visual writing speed of 4 cm/ns minimum.

2.2.2 Current probe. The current probe shall have a minimum bandwidth of 350 MHz (e.g., Tektronix CT-1 at 1,000 MHz).

2.2.3 Charging of voltage probe. The charging voltage probe shall have a minimum input resistance of 1,000 M and a division ratio of 4 percent maximum (e.g., HP 34111A).

2.3 Calibration. Periodic calibration shall include but not be limited to the following.

2.3.1 Charging voltage. The meter used to display the simulator charging voltage shall be calibrated to indicate the actual voltage at points C and D of figure 1020-1, over the range specified in table 1020-1.

2.3.2 Effective capacitance. Effective capacitance shall be determined by charging Cl to the specified voltage (see table 1020-1), with no device in the test socket and the test switch open, and by discharging C1 into an electrometer, coulombmeter, or calibrated capacitor connected between points A and B of figure 1020-1. The effective capacitance shall be 100 pF ±10 percent over the specified voltage range and shall be periodically verified at 1,000 volts. (NOTE: A series resistor may be needed to slow the discharge and obtain a valid measurement.)

2.3.3 Current waveform. The procedure of 3.2 shall be performed for each voltage step of table 1020-I. The current waveform at each step shall meet the requirements of figure 1020-2.

2.4 Qualification. Apparatus acceptance tests shall be performed on new equipment or after major repair. Testing shall include but not be limited to the following.

2.4.1 Current waveform verification. Current waveform shall be verified at every pin of each test fixture using the pin nearest terminal B (see figure 1020-1) as the reference point. All waveforms shall meet the requirements of figure 1020-2. The pin pair representing the worst case (closest to the limits) waveform shall be identified and used for the verification required by 3.2.

3. Procedure.

3.1 General.

3.1.1 Test circuit. Classification testing shall be performed using a test circuit equivalent to figure 1020-1 to produce the waveform shown on figure 1020-2.

3.1.2 Test temperature. Each device shall be stabilized at room temperature prior to and during testing.

3.1.3 ESD classification testing. ESD classification testing of devices shall be considered destructive.

3.2 ESD simulator current waveform verification. To ensure proper simulator operation, the current waveform verification procedure shall be done, as a minimum, at the beginning of each shift when ESD testing is performed, or prior to testing after each change of the socket/board, whichever is sooner. At the time of initial facility certification and recertification, photographs shall be taken of the waveforms observed as required by 3.2c. through 3.2e. and be kept on file for purposes of audit and comparison. (Stored digitized representations of the waveforms are acceptable in place of photographs.)

a. With the DUT socket installed on the simulator, and with no DUT in the socket, place a short (see figure 1020-1) across two pins of the DUT socket and connect one of the pins to simulator terminal A and the other pin to terminal B.

b. Connect the current probe around the short near terminal B (see figure 1020-1). Set the simulator charging voltage source V_s to 4,000 volts corresponding to step 4 of table 1020-1.

c. Initiate a simulator pulse and observe the leading edge of the current waveform. The current waveform shall meet the rise time, peak current, and ringing requirements of figure 1020-2.

d. Initiate a simulator pulse again and observe the complete current waveform. The pulse shall meet the decay time and ringing requirement of figure 1020-2.

e. Repeat the above verification procedure using the opposite polarity (V_s = 4,000 volts).

f. It is recommended that the simulator output be checked to verify that there is only one pulse per initiation, and that there is no pulse while capacitor C1 is being charged. To observe the recharge transient, set the trigger to the opposite polarity, increase the vertical sensitivity by approximately a factor of 10, and initiate a pulse.

TABLE 1020-I. Simulator charging voltage (V_s) steps versus peak current (I_p).

Step	V_S (volts)	I_P (amperes)
1	500	0.33
2	1,000	0.67
3	2,000	1.33
4	4,000	2.67

3.3 Classification testing.

a. A sample of devices (see 4.c) shall be characterized for the device ESD failure threshold using the voltage steps shown in table 1020-1, as a minimum. Finer voltage steps may optionally be used to obtain a more accurate measure of the failure voltage. Testing may begin at any voltage step, except for devices which have demonstrated healing effects, including those with spark gap protection, which shall be started at the lowest step. Examination of known technology family input or output V/I damage characteristics (i.e., curve tracer), or other simplified test verification techniques may be used to validate the failure threshold (e.g., cumulative damage effects may be eliminated by retesting at the failure voltage step using a new sample of devices and possibly passing the step).

b. A new sample of devices shall be selected and subjected to the next lower voltage step used. Each device shall be tested using three positive and three negative pulses using each of the pin combinations shown in table 1020-II. A minimum of one-second delay shall separate the pulses.

c. The sample devices shall be electrically tested to group A, subgroup II applicable (room temperature dc parameters).

d. If one or more of the devices fail, the testing of 3.3b. and 3.3c. shall be repeated at the next lower voltage step used.

e. If none of the devices fail, record the failure threshold determined in 3.3a. Note the highest step passed, and use it to classify the device according to table 1020-III.

TABLE 1020-II. Junction polarities for ESD conditions test.

Device type	Junction/polarity
Bipolar transistor (NPN)	E+ to B-
Bipolar transistor (PNP)	E- to B+
Junction FET's (N-channel)	G+ to S-
Junction FET's (P-channel)	G- to S+
MOSFET's (N- or P-channel)	G to S (both polarities)
Gate protected FET's (P-channel)	G to S (both polarities)
Rectifiers (includes hot carrier and schottky)	A- to K+
Thyristors	G to K (both polarities)
Unijunctions	G to B1 (both polarities)
Darlingtons	E to B (both polarities)
Small signal diodes	A to K (both polarities)

3.4 Pin combinations to be tested.

Using table 1020-II, select the terminal to be used for the ESD tests.

TABLE 1020-III. Device ESD failure threshold classification.

Class 1	0 volt to 1,999 volts
Class 2	2,000 volts to 3,999 volts
Class 3	4,000 volts to 15,999 volts
Nonsensitive	Above 15,999

3.5 Classification criteria.

Devices which fail the post test electrical at +25°C of group A, subgroup 2 of the detail specification shall be considered class 1 devices.

All devices subjected to this test shall be considered destroyed and shall not be shipped for use in any application.

4. Summary. The following details shall be specified in the applicable purchase order or contract, if other than specified herein.

a. Post test electrical.

b. Special additional or substitute pin combinations, if applicable.

c. Sample size, if other than three devices.

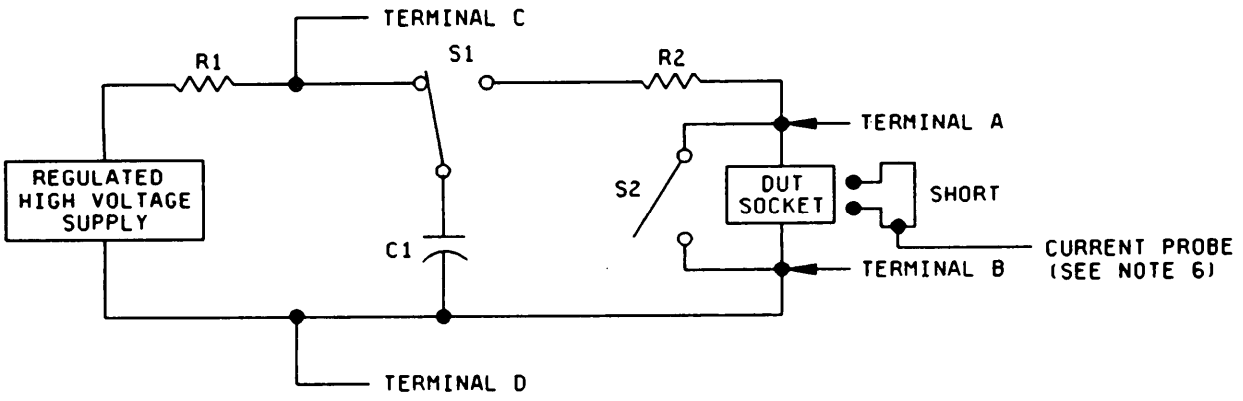

R1 = 10^6 Ω to 10^7 Ω
C1 = 100 pF ±10 percent (Insulation resistance 10^{12} Ω minimum)
R2 = 1,500 Ω ±1 percent
S1 = High voltage relay (Bounceless, mercury wetted, or equivalent
S2 = Normally closed switch (Open during discharge pulse and capacitance measurement)

NOTES:

1. The performance of this simulator circuit is strongly influenced by parasitic. Capacitances across relays and resistor terminals, and series inductance in wiring and in all contents shall be minimized.
2. As a precaution against transients upon recharge of C1, the supply voltage .s may be reduced before switch S1 is returned to the charging position.
3. Piggybacking DUT sockets is not permitted during verification or classification testing.
4. Switching terminals A and B internal to the simulator to obtain opposite polarity is not recommended.
5. C1 represents the effective capacitance (see 2.3.2).
6. The current probe connection shall be made with double shielded cable into a 50Ω termination at the oscilloscope. The cable length shall not exceed 3 feet.

FIGURE 1020-1. ESD classification test circuit (human body model).

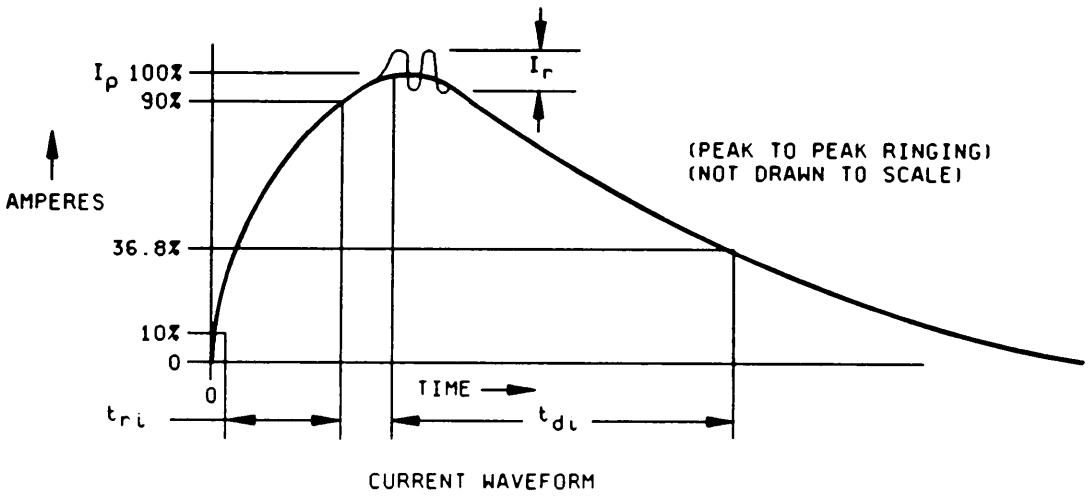

NOTES:

1. The current waveforms shown shall be measured as described in the waveform verification procedure of 3.2 using equipment meeting the requirements of 2.
2. The current pulse and wave the following characteristics:

t_{ri} (rise time) - - - - - - - -	Less than 10 ns.
t_{di} (delay time) - - - - - - -	150 ±20 ns.
I_p (peak current) - - - - - -	Within ±10 percent of the I_p value shown in table 1020-II for the voltage step selected.
I_r (ringing) - - - - - - - - -	The decay shall be smooth, with ringing, break points, double time constants, or discontinuities less than 15 percent I_p maximum, but not observable 100 ns after start of the pulse.

FIGURE 1020-2. ESD classification test circuit waveforms (human body model).

METHOD 1021.2

MOISTURE RESISTANCE

1. Purpose. The moisture resistance test is performed for the purpose of evaluating, in an accelerated manner, the resistance of component parts and constituent materials to the deteriorative effects of the high-humidity and heat conditions typical of tropical environments. Most tropical degradation results directly or indirectly from absorption of moisture vapor and films by vulnerable insulating materials, and from surface wetting of metals and insulation. These phenomena produce many types of deterioration, including corrosion of metals; constituents of materials; and detrimental changes in electrical properties. This test differs from the steady-state humidity test and derives its added effectiveness in its employment of temperature cycling, which provides alternate periods of condensation and drying essential to the development of the corrosion processes and, in addition, produces a “breathing” action of moisture into partially sealed containers. Increased effectiveness is also obtained by use of a higher temperature, which intensifies the effects of humidity. The test includes a low-temperature subcycle that acts as an accelerant to reveal otherwise undiscernible evidences of deterioration since stresses caused by freezing moisture tend to widen cracks and fissures. As a result, the deterioration can be detected by the measurement of electrical characteristics (including such tests as voltage breakdown and insulation resistance) or by performance of a test for sealing. Provision is made for the application of a polarizing voltage across insulation to investigate the possibility of electrolysis, which can promote eventual dielectric breakdown. This test also provides for electrical loading of certain components, if desired, in order to determine the resistance of current-carrying components, especially fine wires and contacts, to electrochemical corrosion. Results obtained with this test are reproducible and have been confirmed by investigations of field failures. This test has proved reliable for indicating those parts which are unsuited for tropical field use.

2. Apparatus. The apparatus used for the moisture resistance test shall include temperature-humidity chambers capable of maintaining the cycles and tolerance described on figure 1021-1 and electrical test equipment capable of performing the measurements in 3.6 and 4.

3. Procedure. Specimens shall be tested in accordance with 3.2 through 3.7 inclusive, and figure 1021-1. Specimens shall be mounted in a manner that will expose them to the test environment.

3.1 Initial conditioning. Unless otherwise specified and prior to mounting specimens for the moisture resistance test, the device leads shall be subjected to a bending stress, initial conditioning in accordance with test condition E of method 2036. Where the specific sample devices being subjected to the moisture resistance test have already been subjected to the required initial conditioning, as part of another test employing the same sample devices, the lead bend need not be repeated.

3.2 Initial measurements. Prior to step 1 of the first cycle, the specified initial measurements shall be made at room ambient conditions, or as specified. When specified, the initial conditioning in a dry oven (see figure 1021-1) shall precede initial measurements and the initial measurements shall be completed within 8 hours after removal from the drying oven.

3.3 Number cycles. Specimens shall be subjected to 10 continuous cycles, each as shown on figure 1021-1. In the event of no more than one unintentional test interruption (power interruption or equipment failure) prior to the completion of the specified number of cycles (except for the last cycle) the cycle shall be repeated and the test may continue. Unintentional interruptions occurring during the last cycle require a repeat of the cycle plus an additional uninterrupted cycle. Any intentional interruption, or any unintentional interruption of greater than 24 hours requires a complete retest.

3.4 Subcycle of step 7. During at least 5 of the 10 cycles, a low temperature subcycle shall be performed. At least 1 hour but not more than 4 hours after step 7 begins, the specimens shall be either removed from the humidity chamber, or the temperature of the chamber shall be reduced, for performance of the subcycle. Specimens during the subcycle shall be conditioned at -10°C +2°C, -5°C, with humidity not controlled, for 3 hours minimun as indicated on figure 1021-1. When a separate cold chamber is not used, care should be taken to assure that the specimens are held at -10°C +2°C, -5°C for the full period. After the subcycle, the specimens shall be returned to +25°C at 80 percent RH minimum and kept there until the next cycle begins.

3.5 Applied voltage. During the moisture resistance test as specified on figure 1021-1, when specified (see 4), the device shall be biased in accordance with the specified bias configuration which should be chosen to maximize the voltage differential between chip metallization runs or external terminals, minimize power dissipation and to utilize as many terminals as possible to enhance test results.

3.6 Conditions (see figure 1021-II. The rate of change of temperature in the chamber is unspecified; however, specimens shall not be subject to the radiant heat from the chamber conditioning processes. Unless otherwise specified, the circulation of air in the chamber shall be at a minimum cubic rate per minute equivalent to five times the volume of the chamber. The steady-state temperature tolerance is ±2°C of the specified temperature at all points within the immediate vicinity of the specimens and at the chamber surfaces. Specimens weighing 25 pounds or less shall be transferred between temperature chambers in less than 2 minutes.

3.7 Final measurements. Following step 6 of the final cycle (or step 7 if the subcycle of 3.3 is performed during the tenth cycle), devices shall be conditioned for 24 hours at room ambient conditions after which either an insulation resistance test in accordance with method 1016, or the specified +25°C electrical end-point measurements shall be performed. Electrical measurements may be made during the 24 hour conditioning period. However, any failures resulting from this testing shall be counted, and any retesting of these failures later in the 24 hour period for the purpose of obtaining an acceptable result is prohibited. No other test (e.g., seal) shall be performed during the 24 hour conditioning period. The insulation resistance test or the alternative +25°C electrical end-point measurements shall be completed within 48 hours after removing the devices from the chamber. When the insulation resistance test is performed, the measured resistance shall be no less than 10 MΩ and the test shall be recorded and data submitted as part of the end-point data. If the package case is electrically connected to the die substrate by design, the insulation resistance test shall be omitted and the specified +25°C electrical end-point measurements shall be completed within 48 hours after removal of the device from the chamber. A visual examination and any other specified end-point electrical parameter measurements (see 4.c) shall also be performed.

3.8 Failure criteria. No device shall be acceptable that exhibits:

a. Specified markings which are missing in whole or in part, faded, smeared, blurred, shifted, or dislodged to the extent that they are not legible. This examination shall be conducted with normal room lighting and with a magnification of 1X to 3X.

b. Evidence of corrosion over more than five percent of the area of the finish or base metal of any package element (i.e., lid, lead, or cap) or any corrosion that completely crosses the element when viewed with a magnification of 10X to 20X.

c. Leads missing, broken, or partially separated.

d. Corrosion formations which bridge between leads or between leads and metal case.

e. Electrical end-point or insulation resistance test failures.

NOTE: The finish shall include the package and entire exposed lead area from meniscus to the lead tip (excluding the sheared off tip itself) and all other exposed metal surfaces.

4. Summary. The following details shall be specified in the applicable acquisition document:

a. Initial measurements and conditions, if other than room ambient (see 3.1).

b. Applied voltage, when applicable (see 3.5), and bias configuration, when required. This bias configuration shall be chosen in accordance with the following guidelines:

(1) Only one supply voltage (V) either positive or negative is required, and an electrical ground (GND) or common terminal. The magnitude of V will be the maximum such that the specified absolute maximum ratings are not exceeded and test conditions are optimized.

(2) Unless otherwise specified, all normally specified voltage terminals and ground leads shall be connected to GND.

(3) Unless otherwise specified, all data inputs shall be connected to V. The polarity and magnitude of V is chosen to minimize internal power dissipation and current flow into the device. Unless otherwise specified, all extender inputs shall be connected to GND.

(4) All additional leads (e.g. clock, set, reset, outputs) considered individually, shall be connected to V or GND, whichever minimizes current flow.

(5) Leads with no internal connection shall be biased to V or GND whichever is opposite to an adjacent lead.

c. Final measurements (see 3.7). Final measurements shall include all electrical characteristics and parameters which are specified as end-point electrical parameters.

d. Number of cycles, if other than 10 (see 3.3).

e. Conditioning in dry oven before initial measurements, if required (see 3.2).

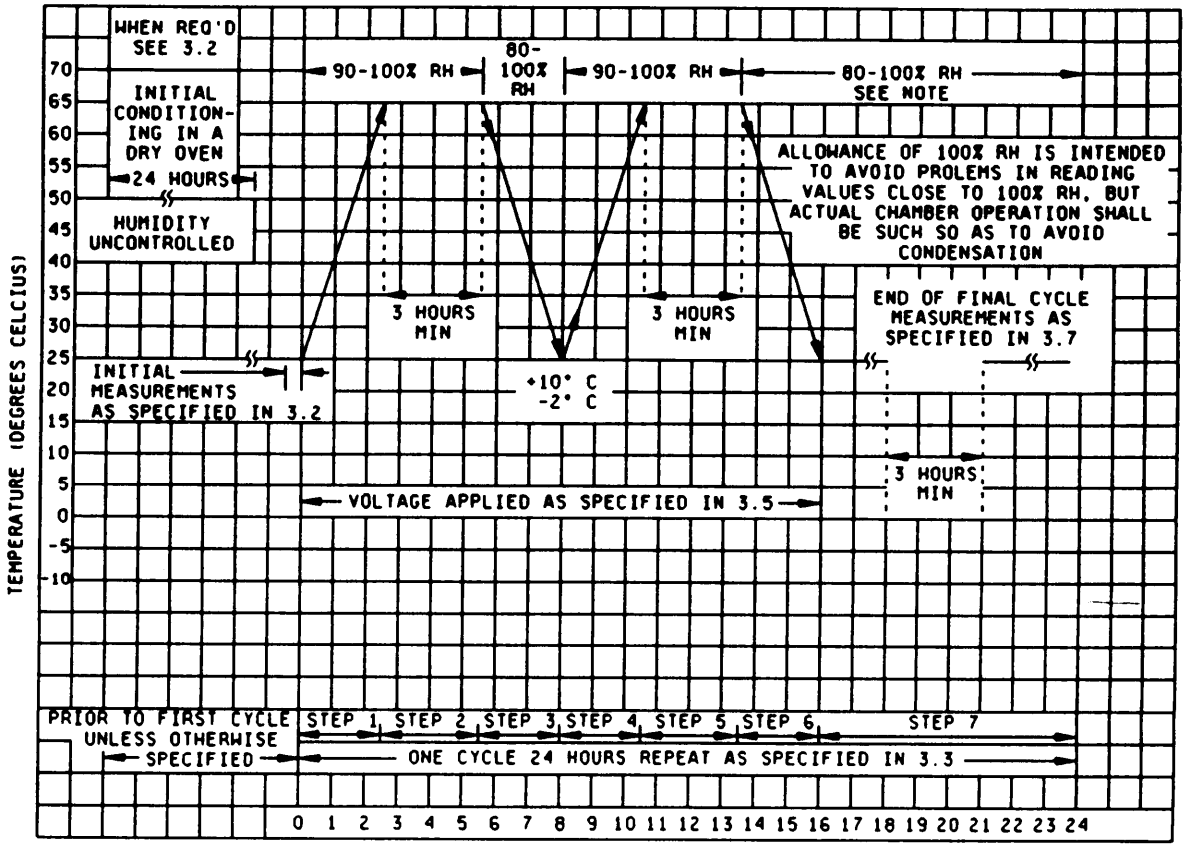

NOTE: The subcycle of step 7 (See 3.4) shall be performed for a minimum of 5 of the 10 cycles. Humidity is uncontrolled for the -10°C portion of step 7.

FIGURE 1021-1. Graphical representation of moisture-resistance test.

METHOD 1022.5

RESISTANCE TO SOLVENTS

1. Purpose. The purpose of this test is to verify that the markings will not become illegible on the component parts when subjected to solvents. The solvents will not cause deleterious, mechanical or electrical damage, or deterioration of the materials or finishes.

1.1 Formulation of solvents. The formulation of solvents herein is considered typical and representative of the desired stringency as far as the usual coatings and markings are concerned. Many available solvents which could be used are either not sufficiently active, too stringent, or even dangerous to humans when in direct contact or when the furies are inhaled.

1.2 Check for conflicts. When this test is referenced, care should be exercised to assure that conflicting requirements, as far as the properties of the specified finishes and markings are concerned, are not invoked.

2. Materials.

2.1 Solvent solutions. The solvent solutions used in this test shall consist of the following:

a. A mixture consisting of the following:

(1) One part by volume of isopropyl alcohol, A.C.S. (American Chemical Society) Reagent Grade, or isopropyl alcohol in accordance with TT-I-735, grade A or B, and

(2) Three parts by volume of mineral spirits in accordance with TT-T-291, type II, grade A, or three parts by volume of a mixture of 80 percent by volume of kerosene and 20 percent by volume ethylbenzene.

b. A semiaqueous based solvent (defluxer (e.g., a turpene)) consisting of a minimum of 60 Percent Limonene and a surfactant heated to +32°C ±5°C. 1/

c. At +63°C to +70°C, a mixture consisting of the following: 2/

(1) 42 parts by volume of deionized water.

(2) 1 part by volume of propylene glycol monomethyl ether.

(3) 1 part by volume of monoethanolamine.

2.1.1 Solvent solutions, safety aspects. Solvent solutions listed in a. through d. above exhibit some potential for health and safety hazards. The following safety precautions should be observed:

a. Avoid contact with eyes.

b. Avoid prolonged contact with skin.

c. Provide adequate ventilation.

d. Avoid open flame.

e. Avoid contact with very hot surfaces.

1/ Or any equivalent EPA approved HCFC or terpene solvent or demonstrated equivalent.
2/ Normal safety precaution for handling this solution (e.g., same as those for diluted amnonium hydroxide) based on O.S.H.A. rules for monoethanolamine.

2.2 Vessel. The vessel shall be a container made of inert material, and of sufficient size to permit complete immersion of the specimens in the solvent solutions specified in 2.1.

2.3 Brush. The brush shall be a toothbrush with a handle made of a nonreactive material. The brush shall have three long rows of hard bristles, the free ends of which shall lie substantially in the same plane. The toothbrush shall be used exclusively with a single solvent and when there is any evidence of softening, bending, wear, or loss of bristles, it shall be discarded.

3. Procedure. The specimens subjected to this test shall be divided into three groups. Metal lidded leadless chip carrier (LCC) packages shall be preconditioned by immersing the specimens in room temperature RMA flux (in accordance with MIL-F-14256, flux, soldering, liquid, rosin base) for 5 to 10 seconds. The specimens shall then be subjected to an ambient temperature of +215°C ±5°C for 60 seconds +5, -O seconds. After the preconditioning, each device lid shall be cleaned with isopropyl alcohol. Each group shall be individually subjected to one of the following procedures:

a. The first group shall be subjected to the solvent solution as specified in 2.1a. maintained at a temperature of +25°C ±5°C.

b. The second group shall be subjected to the solvent solution as specified in 2.1b. maintained at a temperature of +32°C ±5°C.

c. The third group shall be subjected to the solvent solution as specified in 2.1c. maintained at a temperature of +63°C to +70°C.

The specimens and the bristle portion of the brush shall be completely immersed for 1 minute minimum in the specified solution contained in the vessel specified in 2.2. Immediately following immersion, the specimen shall be brushed with normal hand pressure (approximately 2 to 3 ounces) for 10 strokes on the portion of the specimen where marking has been applied, with the brush specified in 2.3. Immediately after brushing, the above procedure shall be repeated two additional times, for a total of three immersions followed by brushings. The brush stroke shall be directed in a forward direction, across the surface of the specimen being tested. After completion of the third immersion and brushing, devices shall be rinsed and all surfaces air blown dry. After 5 minutes, the specimens shall be examined to determine the extent, if any, of deterioration that was incurred.

3.1 Optional procedure for the third group. The test specimens shall be located on a test surface of known area which is located 6 ±1 inches (15.24 ±2.54 centimeters below a spray nozzle(s) which discharges 0.139 gpm (0.6 ±.O.02 liters/minute) of solution (see 2.1c) 1 in^2 (6.5 square centimeters) of surface area at a pressure of 20 ±5 psi (137.90 ±34.41 kilopascal). The specimens shall be subjected to this spray for a period of 10 minutes minimum. Within five minutes after removal of the specimens, they shall be examined in accordance with 3.1.1. The specimens may be rinsed with clear water and air blown dried prior to examination.

3.1.1 Failure criteria. After subject to the test, evidence of damage to the device and any specified markings which are missing in whole or in part, faded, smeared, blurred, or shifted (dislodged) to the. extent that they cannot be readily identified from a distance of at least 6 inches (15.24 cm) with normal room lighting and without the aid of magnification or with a viewer having a magnification no greater than 3X shall constitute a failure.

4. Summary. The number of specimens to be tested shall be specified in the individual specification (see 3.).

METHOD 1026.5

STEADY-STATE OPERATION LIFE

1. Purpose. The purpose of this test is to determine compliance with the specified lambda (λ) for devices subjected to the specified conditions.

2. Procedure. The semiconductor device shall be subjected to the steady-state operation life test at the temperature specified for the time period in accordance with the life test requirements of MIL-S-19500 and herein. The device shall be operated under the specified conditions.

Unless otherwise specified, lead-mounted devices should be mounted by the leads with jig mounting clips at least .375 inch (9.5 mm) from the body or from the lead tubulation if the lead tubulation projects from the body. Unless otherwise specified, mounting and connections to surface mount devices shall be made only at their terminations. Unless a free-air life test is specified, case mounted device types (e.g., stud, flange, disc) shall be mounted by their normal case surface. The point of connection shall be maintained at a temperature not less than the specified temperature.

After the termination of the test, or in accordance with the period specified in MIL-S-19500 and the detail specification, if otherwise defined, the sample units shall be removed from the specified test conditions and allowed to reach standard test conditions. Specified end-point measurements for qualification and quality conformance inspection shall be completed within 96 hours after removal of sample units from the specified test conditions. Additional readings may be taken at the discretion of the manufacturer. If end-point measurements cannot be performed within the specified time, the devices shall be subjected to the same test conditions for a minimum of 24 additional hours before post test measurements are performed.

3. Summary. The following conditions shall be specified in the detail specification:

a. Test type and details; rectifying or forward dc current and V_r for rectifiers and signal diodes, dc power (or current) for zener diodes, power (and range of V_{CE} and V_{DS}) for bipolar and FETs (see 2.).

b. Test temperature, if other than room ambient.

c. Test mounting, if other than that specified (see 2.).

d. End-point measurements (see 2.).

METHOD 1027.3

STEADY-STATE OPERATION LIFE (SAMPLE PLAN)

1. Purpose. The purpose of this test is to determine compliance with the specified sample plan for devices subjected to the specified conditions.

2. Procedure. Unless otherwise specified, the semiconductor device shall be subjected to the steady-state operation test at the temperature specified for 340 hours minimum. The device shall be operated under the specified conditions.

Unless otherwise specified, lead-mounted devices should be mounted by the leads with jig mounting clips at least .375 inch (9.5 mm) from the body or from the lead tabulation if the lead tubulation projects from the body. Unless otherwise specified, mounting and connections to surface mount devices shall be made only at their terminations. Unless free-air life test is specified, case mounted device types (e.g., stud, flange, disc) shall be mounted by their normal case surface. The point of connection shall be maintained at a temperature not less than the specified temperature.

After the termination of the test, or in accordance with the period specified by MIL-S-19500 and the detail specification if otherwise defined, the sample units shall be removed from the specified test conditions and allowed to reach standard test conditions. Specified end-point measurements for qualification and quality conformance inspection shall be completed within 96 hours after removal of sample units from the specified test conditions. Additional readings may be taken at the discretion of the manufacturer. If end-point measurements cannot be performed within the specified time, the devices shall be subjected to the same test conditions for a minimum of 24 additional hours before post test measurements are performed.

3. Summary. The following conditions shall be specified in the detail specification:

a. Test type and details; rectifying or forward dc current and V_r for rectifiers and signal diodes, dc power (or current) for zener diodes, power (and range of V_{CE} and V_{DS}) for bipolar and FETs (see 2.).

b. Test temperature, if other than room ambient.

c. Test time, if other than 340 hours (see 2.).

d. Test mounting, if other than that specified (see 2.).

e. End-point measurements (see 2.).

METHOD 1031.5

HIGH-TEMPERATURE LIFE (NONOPERATING)

1. Purpose. The purpose of this test is to determined compliance with the specified lambda (λ) for devices subjected to the specified conditions.

2. Procedure. The device shall be stored under the specified ambient conditions (normally the maximum temperature) for a time period in accordance with the life test requirements of MIL-S-19500. In accordance with the life test period specified by MIL-S-19500, the sample units shall be removed from the specified ambient conditions and allowed to reach standard test conditions. Specified end-point measurements for qualification and quality conformance inspection shall be completed within 96 hours after removal of sample units from the specified ambient conditions. If measurements can not be performed within the specified time, the devices shall be subjected to the same test conditions for a minimum of 24 additional hours before post test measurements are performed. Additional readings may be taken at the discretion of the manufacturer.

2.1 Visual examination. The markings shall be legible after the test. There shall be no evidence (when examined without magnification) of flaking or pitting of the finish or corrosion that will interfere with the mechanical and electrical application of the device.

3. Summary. The following conditions shall be specified in the detail specification:

a. Test conditions (see 2.).

b. End-point measurements (see 2.).

METHOD 1032.2

HIGH-TEMPERATURE (NONOPERATING) LIFE (SAMPLE PLAN)

1. Purpose. The purpose of this test is to determine compliance with the specified sample plan for devices subjected to the specified conditions.

2. Procedure. Unless otherwise specified, the device shall be stored under the specified ambient conditions (normally the maximum temperature) 340 hours minimum. The sample units shall be removed from the specified ambient conditions and allowed to reach standard test conditions. Specified end-point measurements for qualification and quality conformance inspection shall be completed within 96 hours after removal of sample units from the specified ambient conditions. If measurements cannot be performed within the specified time, the devices shall be subjected to the same test conditions for a minimum of 24 hours before post test measurements are performed. Additional readings may be taken at the discretion of the manufacturer.

2.1 Visual examination. The markings shall be legible after the test. There shall be no evidence (when examined without magnification) of flaking or pitting of the finish or corrosion that will interfere with the mechanical and electrical application of the device.

3. Summary. The following conditions shall be specified in the detail specification:

a. Test conditions (see 2.).

b. Test time, if other than 340 hours (see 2.).

c. End point measurements (see 2.).

METHOD 1036.3

INTERMITTENT OPERATION LIFE

1. Purpose. The purpose of this test is to determine compliance with the specified lambda (λ) for devices subjected to the specified conditions.

2. Procedure. The device shall be subjected intermittently to the specified operating and nonoperating conditions for the time period in accordance with the life test requirements of MIL-S-19500. The on- and off-periods shall be initiated by sudden, not gradual, application or removal of the specified operating conditions. Lead mounted devices should be mounted by the leads with jig mounting clips at least .375 inch (9.5 mm) from the body or lead tubulation, if the lead tabulation projects from the body. The point of connection shall be maintained at a temperature not less than the specified temperature. Within the time interval of 24 hours before to 72 hours after termination of the test, in accordance with the life test period specified by MIL-S-19500, the sample units shall be removed from the specified test conditions and allowed to reach standard test conditions. Specified end-point measurements for qualification and quality conformance inspection shall be completed within 96 hours after removal of sample units from the specified test conditions. Additional readings may be taken at the discretion of the manufacturer.

3. Summary. The following conditions shall be specified in the detail specification:

a. Test conditions (see 2.).

b. Operating and nonoperating cycles (see 2.).

c. Test temperature (case or ambient).

d. Test mounting, if other than that specified (see 2.).

e. End point measurements (see 2.).

METHOD 1037.2

INTERMITTENT OPERATION LIFE (SAMPLE PLAN)

1. Purpose. The purpose of this test is to determine compliance with the specified numbers of cycles for devices subjected to the specified conditions. It accelerates the stresses on all bonds and interfaces between the chip and mounting face of devices subjected to repeated turn on and off of equipment and is therefore most appropriate for case mount style (e.g., stud, flange, and disc) devices.

2. Mounting. Clips or fixtures appropriate for holding the device terminations and reliably conducting the heating current shall be used. This method is intended to allow the case temperature to rise and fall appreciably as the junction is heated and cooled; thus it is not appropriate to use a large heat sink. Lead-mounted devices, when specified, should be mounted by the leads with jig mounting clips at least .375 inch (9.5 mm) from the body, or from the lead tabulation if it projects from the body.

3. Procedure. All test samples shall be subjected to the specified or of cycles. When stabilized after initial warm-up cycles, a cycle shall consist of an "on" period, when power is applied suddenly, not gradually, to the device for the time necessary to achieve a delta case temperature (delta is the high minus the low mounting surface temperatures) of +85°C (+60°C for thyristors) +15°C, -5°C, followed by an off period, when the power is suddenly removed, for cooling the case through a similar delta temperature. Auxiliary (forced) cooling is permitted during the off period only.

DC current shall be used for the power required during the "on" period except, for rectifiers and thyristors, equivalent half sine wave (or full sine wave for triacs) is permissible. The test power, or current, shall be at least the free air rating. For disc types, where functional mounting requires heat sinking, it shall be at least 25 percent of the continuous, case referenced, rating. The on time (leaded and axial leaded devices) shall be at least 30 seconds. Unless otherwise specified, for TO3, DO5, and larger devices it shall be at least one minute. Specified end-point measurements for qualification and quality conformance inspection shall be completed within 96 hours after removal of sample units from the specified test conditions. Additional readings may be taken at the discretion of the manufacturer. If measurements cannot be performed within the specified time, the devices shall be subjected to the same test conditions for a minimum of 200 additional cycles before post test measurements are performed.

4. Summary. The following conditions shall be specified in the detail specification:

a. Test conditions (power or current, see 3.).

b. Number of operating cycles (see 3.), if other than 2,000.

c. Test mounting, if other than that specified (see 2.).

d. End-point measurements (see 3.1).

NOTE: Heat sinks are not intended to be used in this test, however, small heat sinks may be used when it is otherwise difficult to control case temperature of test samples, such as with small package types (e.g., T039).

METHOD 1038.3

BURN-IN (FOR DIODES, RECTIFIERS, AND ZENERS)

1. Purpose. This test is performed to eliminate marginal devices or those with defects resulting from manufacturing aberrations that are evidenced as time and stress dependent failures. Without the burn-in, these defective devices would be expected to result in early lifetime failures under normal use conditions. It is the intent of this test to operate the semiconductor device at specified conditions to reveal electrical failure modes that are time and stress dependent.

a. HTRB screens for mobile or temperature activated impurities within (and without) the device's passivation layers. It is equally effective on most device types including diodes, rectifiers, zeners, and transient voltage suppressors.

b. SSOP, when properly specified, simulates actual device operation but with accelerated conditions. Some of the elements of HTRB are combined with screening for die bond integrity. It is effective on some device types including diodes, rectifiers, and zeners. The conditions used for zeners provide the desired HTRB screen concurrently with the SSOP screen.

2. Mounting. Unless otherwise specified in the detail specification, mounting shall be in accordance with the following.

2.1 Test condition A, HTRB. The method of mounting is usually optional for high temperature bias since little power is dissipated in the device. (Devices with normally high reverse leakage current may be mounted to heat sinks to prevent thermal run-away conditions.)

2.2 Test condition B. SSOP.

a. Devices with leads projecting from the body (e.g., axial) shall be mounted by their leads at least .375 inch (9.5 mm) from the body or lead tabulation.

b. Unless otherwise specified, devices designed for case mounting (e.g., stud, flange, and disc) shall be mounted by the stud or case according to the design specifications for the package. Care must be exercised to avoid stressing or warping of the package. Thermally conductive compounds may optionally be used provided that they are removed afterwards and do not leave a residue on the package.

c. Surface mount types shall be held by their electrical terminations.

3. Procedure. The semiconductor device shall be subjected to the burn-in at the temperature and for the time specified herein or on the detail specification. Pre-burn-in measurements shall be made as specified. The failure criteria shall be as specified in the appropriate detail specification. If measurements cannot be performed within the specified time, the devices shall be subjected to the same test conditions for a minimum of 24 additional hours before test measurements are performed.

3.1 Test condition A, HTRB. Unless otherwise specified, HTRB is performed with the cathode positively biased at an artificially elevated temperature for 48 hours minimum. These conditions apply to both rectifiers and to avalanche and zener voltage regulators.

a. The junctions of rectifiers shall be reverse biased at 50 to 80 percent in accordance with figure 1038-1 of their rated working peak reverse voltage; avalanche and zener voltage regulators, when specified, shall be reverse biased at 80 percent of their minimum avalanche or zener voltages except when voltage exceeds 2,500, see figure 1038-1. The reverse bias shall be a dc bias with less than 20 percent ripple except where rectified (pulsating) dc is permitted. The ambient or case test temperature shall be as specified (normally +150°C for silicon devices) (see figure 1038-1).

b. At the end of the high-temperature test time, as specified, the ambient temperature shall be lowered. The test voltage shall be maintained on the devices until a case temperature of +30°C ±5°C is attained. Testing shall be completed within 24 hours after the removal of voltage. After removal of the bias voltage, no other voltage shall be applied to the device before taking the post HTRB reverse current measurement. Post HTRB measurements shall be taken as specified.

Uni-directional transient voltage suppressors shall be treated as avalanche and zener voltage regulators for the purposes of conducting HTRB.

Bi-directional transient voltage suppressors shall be treated as two discrete avalanche or zener voltage regulators (when specified) with each polarity taking turns receiving HTRB and post HTRB testing. Post HTRB testing of one must be completed before reversing the device and commencing HTRB with opposite polarity bias voltage. The second polarity may be achieved either electrically or by mechanically reversing the devices.

3.2 Test condition B, steady-state operating power. Unless otherwise specified, the devices shall be subjected to the maximum rated test conditions for a minimum of 96 hours. The test temperature shall be as specified. Unless otherwise specified, post burn-in readings shall be taken within 96 hours. If ambient temperature is specified, it shall comply with the general requirements for HTRB or burn-in of this specification (see 4.5). The following indicates the test conditions to be specified for each of the three types of power burn-in tests:

a. Rectifying test. Unless otherwise specified, average rectified current, peak reverse voltage, frquency, and temperature (case, junction, or ambient) are as specified in the detail specification.

b. Forward bias test. Unless otherwise specified, forward current and temperature (case or junction) are as specified in the detail specification.

c. Voltage regulator (zener) test. Unless otherwise specified, voltage regulator diode current and temperature (case or junction) are as specified in the slash drawing. At the end of the test time, the power level shall-be reduced to five percent of the operating level. If the ambient is artificially elevated, it shall also be reduced to room temperature. The object is to let the devices cool down under bias. When the junction or case temperature has stabilized to below +50°C, the bias may be removed and the devices tested within 96 hours after removal of reverse bias. No other voltage may be applied to the devices until completion of electrical test.

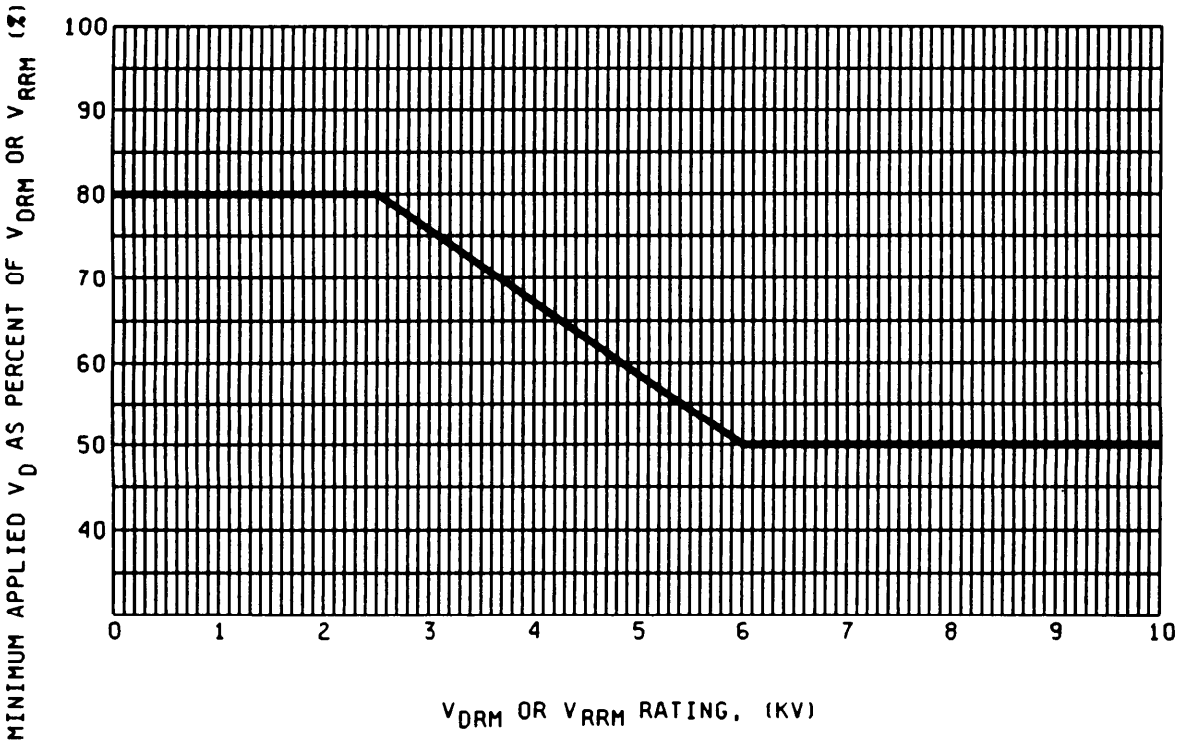

FIGURE 1038-1. Voltage requirement.

4. Summary. The test condition letter (A or B) and the following details shall be specified in the applicable detail specification.

4.1 Test condition A, HTRB.

a. Test temperature (see 3.1).

b. Test conditions (see 2.1 and 3.1).

c. Test time (see 3.1).

d. Preburn-in and post burn-in measurements (see 3. and 3.1).

e. Time for completion of post burn-in measurements, if other than 24 hours (see 3.1).

f. Criteria for failure (see 3.).

4.2 Test condition B, steady-state operating power.

a. Test temperature (see 3.2).

b. Test conditions (see 2.2 and 3.2).

c. Burn-in time if other than 96 hours (see 3.2).

d. Pre-burn-in and post burn-in measurements (see 3. and 3.2).

e. Time for completion of post burn-in measurements, if other than 96 hours (see 3.2).

f. Criteria for failure (see 3.).

METHOD 1039.4

BURN-IN (FOR TRANSISTORS)

1. Purpose. This test is performed to eliminate marginal devices or those with defects resulting from manufacturing aberrations that are evidenced as time and stress dependent failures. Without the burn-in, these defective devices would be expected to result in early lifetime failures under normal use conditions. It is the intent of this test to operate the semiconductor device at specified conditions to reveal electrical failure modes that are time and stress dependent.

2. Procedure. The semiconductor device shall be subjected to the burn-in at the temperature and for the time specified herein. Preburn-in measurements shall be made as applicable. The failure criteria shall be as specified.

2.1 Mounting. Devices with leads projecting from the body shall be mounted by their leads at least .250 inch (6.35 mm) from the seating plane. Unless otherwise specified, devices with studs or case shall be mounted by the stud or case.

2.1.1 Test condition A. steady-state reverse bias. The transistor primary blocking junction, as specified, shall be reverse biased for 48 hours minimum, except PNP bipolar transistors shall be 24 hours, at the ambient temperature specified (normally +150°C) and at 80 percent of its maximum rated collector-base voltage. For bipolar transistors, the V_{CB} base is not to exceed the maximum collector-emitter voltage rating. For field-effect (signal or low power) transistors, the gate to source voltage, with drain to source shorted, shall be as specified. At the end of the high-temperature test time, specified herein, the ambient temperature shall be lowered. The test voltage shall be maintained on the devices until T_c = +30°C ±5°C is attained. After room ambient temperature has been established, the bias voltage shall be removed. After removal of the bias voltage, no other voltage shall be applied to the device before taking the post burn-in reverse-current measurement(s). Unless otherwise specified, after burn-in voltage is removed, post burn-in measurements shall be completed within 24 hours. If measurements cannot be performed within the specified time, the devices shall be subjected to the same test conditions for a minimum of 24 additional hours before post test measurements are performed.

2.1.2 Test condition B, steady-state power. All devices shall be operated at the maximum rated power related to the test temperature for 160 hours minimum at the specified test conditions (excluding microwave).

a. For bipolar transistors, the temperature and power shall be specified. Unless otherwise specified, the temperature shall be as follows:

   T_A = room ambient as defined in 4.5 herein for small signal, switching, and mediun power devices intended for printed circuit board mounting; T_J = maximum rated temperature, +O°C, -25°C, for devices intended for chassis or heat sink mounting. Case temperature burn-in at maximum ratings (typically T_c = +l00°C) may be substituted on the chassis or heat sink mounted devices at the supplier's option. In the voltage conditions specified herein cause the SOA rating to be exceeded, then the voltage shall be decreased until the SOA rating is met while maintaining the full rated power condition. For microwave bipolar transistors, the temperature, voltage, and current shall be as specified in the detail specification.

b. For unijunction and field-effect (signal and low power) transistors, the temperature, voltage, and current shall be, as specified.

c. Post burn-in measurements shall be as specified.

d. Unless otherwise specified, post burn-in readings shall be taken within 96 hours. If measurements cannot be performed within the specified time, the devices shall be subjected to the same test conditions for a minimum of 24 additional hours before post test measurements are performed.

3. Summary. Test condition letter and the following conditions shall be specified in the detail specification.

3.1 Test condition A:

a. Junction to be reverse biased (see 2.1.1).

b. Gate to source voltage for FETs (see 2.1.1).

c. Test temperature (see 2.1.1).

d. Test time for FETs (see 2.1.1).

e. Voltage for post burn-in reverse current measurement (see 2.1.1).

f. Time for completion of post burn-in measurements, if other than 24 hours (see 2.1.1).

g. Criteria for failure (see 2.).

3.2 Test condition B:

a. Test temperature, if other than as specified in 2.1.2.

b. Test conditions (see 2.1.2).

c. Power for bipolar transistors (see 2.1.2).

d. Voltage and current for unijunction and FETs (see 2.1.2).

e. Preburn-in and post burn-in measurements (see 2.1.2).

f. Time for completion of post burn-in measurements, if other than as specified in 2.1.2.

g. Criteria for failure (see 2.).

METHOD 1040

BURN-IN (FOR THYRISTORS
(CONTROLLED RECTIFIERS))

1. Purpose. The purpose of this test is to eliminate marginal or defective semiconductor devices by operating thereat specified screening conditions which reveal electrical failure modes that are time and stress dependent. In the absence of burn-in, these defective devices would be expected to result in early lifetime failures under normal use conditions.

2. Procedure. Lead mounted devices shall be mounted by the leads at least .375 inch (9.5 mm) from the body or lead tubulation, if the lead tabulation projects from the body. Unless otherwise specified, stud or case mounted devices shall be mounted by the stud or case respectively. The devices shall then be subjected to the burn-in screen(s) at the temperature and for the time specified. Preburn-in and post burn-in measurements shall be made as specified.

2.1 Test condition A (ac blocking voltage). The rated peak reverse and the rated peak forward blocking voltage shall be alternately applied, each in the form of a 60 Hz half wave sinusoidal pulse using the circuit of figure 1040-1. The test temperature shall be as specified. At the end of the specified high temperature test time, the ambient temperature shall be lowered. The test voltage shall be maintained on the devices until T_c = +30°C ±5°C is attained. After bias is removed and prior to post test measurements, the devices shall be maintained at room ambient temperature and no voltage shall be applied prior to that voltage specified for the post test measurements. The post test end points shall be completed within the specified time after the bias voltage is removed. Any device which switches from the off-state to the on-state as indicated by a blown fuse shall be removed from the lot.

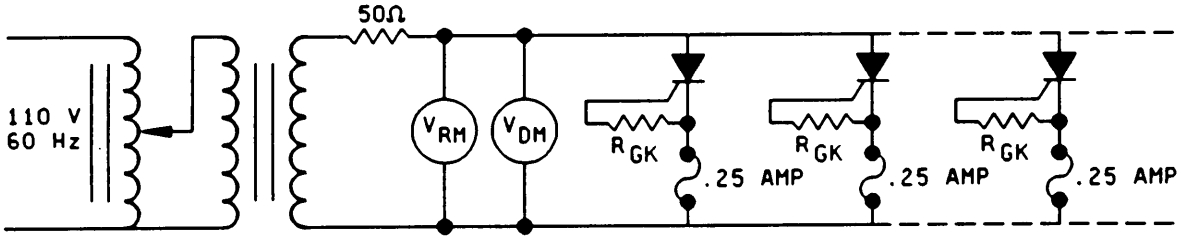

FIGURE 1040-1. AC blocking voltage circuit.

2.2 Test condition B (dc forward blocking voltage). The rated dc forward blocking voltage shall be applied as indicated in the circuit on figure 1040-2. The test temperature shall be as specified. At the end of the specified high-temperature test time, the ambient temperature shall be lowered. The test voltage shall be maintained on the devices until T_c = +30°C ±5°C is attained. After bias is removed and prior to post test measurements, the devices shall be maintained at room ambient temperature and no voltage shall be applied prior to that voltage specified for the post test measurements. The post test end points shall be completed within the specified time after the bias voltage is removed. Any device which switches from the off-state to the on-state as indicated by a blown fuse shall be removed from the lot.

3. Measurements. Initial readings shall be taken prior to burn-in. Post-test readings shall be taken within 96 hours.

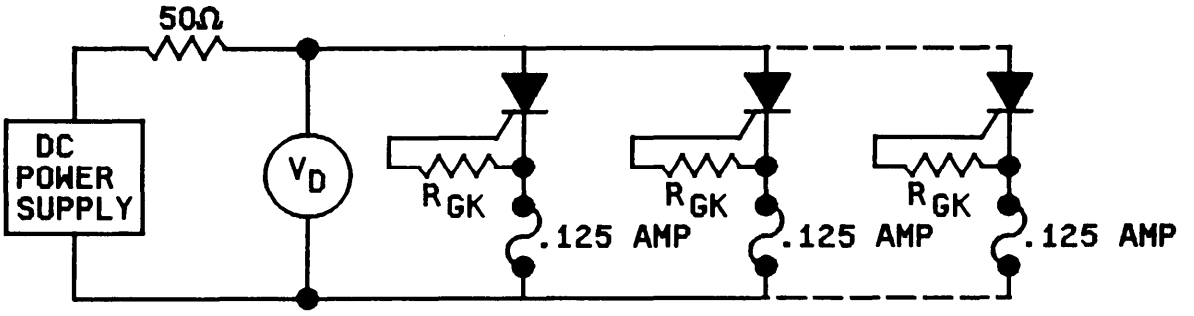

FIGURE 1040-2. DC forward blocking voltage circuit.

4. Summary. The test condition letter and the following conditions shall be specified in the detail specification:

a. Test condition A:

1. Peak forward and reverse blocking voltage (see 2.1).

2. Test temperature (see 2.1).

3. Duration of burn-in (see 2.1).

4. R_{GK} (see figure 1040-1).

5. Preburn-in and post burn-in measurements (see 3.).

b. Test condition B:

1. DC forward blocking voltage (see 2.2).

2. Test temperature (see 2.2).

3. Duration of burn-in (see 2.2).

4. R_{GK} (see figure 1040-2).

5. Preburn-in and post burn-in measurements (see 3.).

METHOD 1041.3

SALT ATMOSPHERE (CORROSION)

1. Purpose. This test is an accelerated laboratory corrosion test simulating the effects of seacoast atmospheres on devices.

2. Apparatus. Apparatus used in the salt-atmosphere test shall include the following:

   a. Exposure chamber with racks for supporting devices.

   b. Salt-solution reservoir.

   c. Means for atomizing the salt solution, including suitable nozzles and compressed-air supply.

   d. Chamber-heating means and controls.

   e. Means for humidifying the air at a temperature above the chamber temperature.

3. Procedure. The device shall be placed within the test chamber. Unless otherwise specified, a salt atmosphere fog having a temperature of +35°C (+95°F) shall be passed through the chamber for a period of 24 +2, -0 hours. The fog concentration and velocity shall be adjusted so that the rate of salt deposit in the test area is between 10 and 50 g/m^2/day.

4. Examinations. Unless otherwise specified, upon completion of the test, and to aid in the examinations, devices shall be prepared in the following manner: Salt deposits shall be removed by a gentle wash or dip in running water not warmer than +37°C (+100°F) and a light brushing, using a soft-hair brush or plastic bristle brush. A device with illegible markings, leads missing, broken, or partially separated, evidence (when examined with 10X magnification) of flaking or pitting of the finish or corrosion exceeding five percent of the package area or five percent of the lead shall be considered a failure. Discoloration of the plating or lead finish shall not be considered a failure. The marking legibility requirement shall not apply to characters with a height of less than .030 inches (0.76 mm).

5. Summary. The following conditions shall be specified in the detail specification:

   a. Time of exposure, if other than that specified (see 3.).

   b. Measurements and examinations after test (see 4.).

METHOD 1042.3

BURN-IN AND LIFE TEST FOR POWER MOSFET's OR INSULATED GATE BIPOLAR TRANSISTORS (IGBT)

1. Purpose. Test conditions A, B, and C are performed to eliminate marginal devices or those with defects resulting from manufacturing aberrations that are evidenced as time and stress failures under normal use conditions. Test condition D is performed to eliminate marginal lots with manufacturing defects. For the IGBT, replace the drain and source MOSFET designations with collector and emitter IGBT designations, D = C and S = E

2. Procedure. The semiconductor device shall be subjected to the burn-in at the temperature and for the time specified herein. Preburn-in measurements shall be made as applicable. The failure criteria shall be as specified.

2.1.1 Test condition A, steady-state reverse bias. All devices shall be operated at 80 percent of the maximum rated drain to source voltage at the specified test temperature for 160 hours minimum, at the specified test conditions. The drain to source voltage, with gate to source shorted, shall be as specified. At the end of the high-temperature test time, specified herein, the ambient temperature shall be lowered. The burn-in voltage shall be maintained on the devices until T_c = +30°C ±5°C is attained. The interruption of bias for up to one minute for the purpose of moving devices to cool down positions separate from the chamber within which life testing was performed shall not be considered removal of bias.

After removal of the burn-in voltage, no other voltage shall be applied to the device before taking the post burn-in reverse current measurement(s). After burn-in voltage is removed, post burn-in measurements shall be completed within 96 hours, unless otherwise specified. (See figure 1042-1.) Unless otherwise specified, the burn-in temperature shall be T_A = +150°C. The V_{DS} burn-in voltage shall be as follows. For IGBT devices, burn-in temperature shall be T_J = +150°C -15°C to +0°C, and test time shall be 96 hours minimum.

If $V_{(BR)DSS}$ is	V_{DS} shall be
20 V	16 V
30 v	24 V
40 v	32 V
60 V	48 V
80 V	64V
90 v	72 V
100 v	80 V
120 v	96 V
150 v	120 v
170 v	136 V
200 v	160 V
240 V	192 V
350 v	280 V
400 v	320 V
450 v	360 V
500 v	400 v
600 V	480 V

$V_{(BR)DSS}$ voltages in between shall revert to the next lower V_{DS} burn-in voltage.

2.1.1.1 Temperature accelerated test details. In an accelerated test devices are subjected to bias conditions at a temperature exceeding the maximum rated junction temperature. The maximum ambient temperature for MOSFETs is +175°C for a minimum of 48 hours. It is recommended that an adequate sample of devices be exposed to the high temperature while measuring the voltage(s) and current(s) of the devices to assure that the applied stresses do not induce damaging overstress. An adequate sample which has completed the accelerated test should also be subjected to a 1,000 hour steady state reverse bias at standard test conditions to assure the devices have not been deleteriously affected. Details of the accelerated test will be found in the detail and/or general specification.

2.1.2 Test condition B. steady-state gate bias. All devices shall be operated at 80 percent of the maximum rated gate to source voltage at the specified temperature for a minimum of 48 hours. (See figure 1042-2.) For MOS power transistors, the temperature and voltage shall be as specified. Unless otherwise specified, the temperature (T_A) shall be +150°c.

If maximum rated V_{GS} is 10 V	Burn-in voltage (V_{GS}) shall be 8 V
15 v	12 v
20 v	16 V
30 v	24 V
40 v	32 V

V_{GS} voltages in between shall revert to the next lower voltage.

2.1.3 Test condition C. steady-state power. All devices shall be operated at the maximum junction temperature +0°C, -24°C by means of applying power to the device while maintaining an ambient temperature of +25°C +10°C, -5°C. The junction temperature shall be verified by means of measuring junction temperature using the change in body diode voltage drop or calculated by applying the following equations:

$T_J = R_{\theta JA} \times P_D + T_A$ Not heat sink used

or

$T_J = R_{\theta JC} \times P_D + T_c$ Heat sink used

T_c = Temperature of case

T_A = Ambient air temperature

T_S = Temperature of heat sink

$P_D = V_{DS} \times I_D$

V_{DS} = Drain-source voltage

I_D = Drain-source current

Note: The power indicated by the safe operating curve shall not be exceeded.

2.1.4 Test condition, intermittent power. 1/ All devices shall be subjected to the number of cycles as specified. A cycle shall consist of applying power to the device for the time necessary to achieve a +100°C +15°C, -10°C minimum rise in junction temperature followed by an off period for the time necessary for the junction to cool. Forced air cooling is permitted during the off period only.

The power level, power-on time, and heat sink used, if any, shall be chosen to ensure that at the end of the heating cycle, the case temperature is not more than 15°C below the junction temperature. The rise in junction temperature during the on period shall be verified by means of measuring junction temperature using the change in body diode voltage drop or calculated by applying the following equations.

$\Delta T_J = P_T R_{\theta JA} (1 - \text{Exp} - t/T_P)$ where $P_T = V_{DS} I_D$

T_P = thermal time constant of device package, and the heat sink used.

t = heating time, $R_{\theta JA}$ = thermal resistance junction to ambient, for the period of heating time specified, of the device and any necessary heat sink used.

This test is intended to allow the case temperature to rise and fall appreciably as the junction is heated and cooled; thus, it is not appropriate to use a large heat sink or a high power short pulse.

1/ This test condition is destructive.

3. Summary. Test Condition letter and the follwoing details shall be spedified in the individual specification.

3.1 Test condition A.

a. Drain to source voltage for MOS power field-effect transistors (V_{DS}) (see 2.1.1).

b. Test temperature, if other than specified in 2.1.1.

c. Test time, if other than spcified in 2.1.1.

d. Voltage for post burn-in reverse current measurement (see 2.1.1).

e. Criteria for failure.

3.2 Test condition B.

a. Test temperature, if other than as specified in 2.1.2.

b. Test conditions (see 2.1.2).

c. Voltage for MOS power field-effect transistors (see 2.1.2).

d. Preburn-in and post burn-in measurements.

e. Criteria for failure.

3.3 Test condition C.

a. Ambient temperature and thermal resistance (see 2.1.3).

b. Voltage and current, if other than specified in 2.1.3.

c. Preburn-in and post burn-in measurements.

d. Total test time (see 2.1.3).

e. Criteria for failure.

3.4 Test condition D.

a. Ambient temperature (if one is desired) and thermal resistance (see 2.1.4).

b. Voltage and current, if other than specified in 2.1.4.

c. Pretest and post test measurements.

d. Number of cycles (see 2.1.4).

e. Criteria for failure.

f. Minimum heating time.

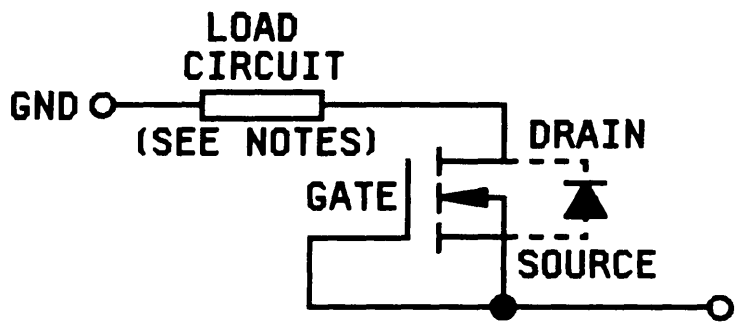

NOTES:

1. The load circuit shall be selected or designed to ensure that the voltage across the load circuit of each acceptable device shall not exceed 10 percent of the specified test voltage. The load circuit may be a resistor, fuse, or circuit which:

   a. Protects the power supply.

   b. Isolates the defective devices from the other devices under test.

   c. Insures a minimum of 98 percent of the specified test voltage is applied across the OUT.

2. If the circuit does not maintain bias on a failed device, then means must be provided to identify that device.

FIGURE 1042-1. High temperature reverse bias test circuit.

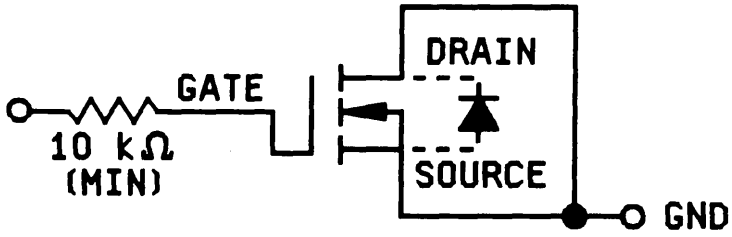

FIGURE 1042-2. High temperature gate bias circuit.

METHOD 1046.2

SALT SPRAY (CORROSION)

1. Procedure. The device shall be tested in accordance with method 101 of MIL-STD-202. The following exceptions shall apply:

   a. At the conclusion of the test the device will be dried for 24 hours at +40°C ±5°C before the examination. A device with illegible markings, evidence (when exmined without magnification) of flaking or pitting of the finish or corrosion that will interfere with the application of the device shall be considered a failure.

   b. Unless otherwise specified, salt solution shall be 20 percent.

METHOD 1048

BLOCKING LIFE

1. Purpose. The purpose of this test is to determine compliance with the specified lambda for devices subjected to the specified conditions.

2. Mounting. The method of mounting is usually optional for blocking life tests since little power is dissipated in the device. (Devices with normally high reverse leakage current may be mounted to heat sinks to prevent thermal run-away conditions.)

3. Procedure. Blocking life is performed with the primary blocking junction, or insulation, reverse biased at an artificially elevated temperature for the time period in accordance with the life test requirements of MIL-S-19500 and herein; at the temperature specified (normally +150°C and at 80 to 85 percent of the rated voltage relevant to the device (V_R, V_Z(min), V_{CB}, V_{AG}, V_{DG}, and V_{GS}).

At the end of the high-temperature test time, as specified, the ambient temperature shall be lowered. The test voltage shall be maintained on the devices until a case temperature of +30°C ±5°C is attained. After this ambient temperature has been established, the bias voltage shall be maintained until testing is performed; testing shall be completed within 24 hours after the removal of power. After removal of the bias voltage, no other voltage shall be applied to the device before taking the post test leakage current measurement. Post test measurements shall be taken as specified.

4. Summary. The following details shall be specified in the applicable detail specification:

a. Test temperature (see 3.).

b. Test conditions: Voltage and terminals to be biased (see 2. and 3.).

c. Test time (see 3.).

d. Pre and post test measurements (see 3.).

e. Time for completion of post test measurements, if other than 24 hours.

METHOD 1049

BLOCKING LIFE (SAMPLE PLAN)

1. Purpose. The purpose of this test is to determine compliance with the specified sample plan for devices subjected to the specified conditions.

2. Mounting. The method of mounting is usually optional for blocking life tests since little power is dissipated in the device. (Devices with normally high reverse leakage current may be mounted to heat sinks to prevent thermal run-away conditions.)

3. Procedure. Unless otherwise specified, blocking life is performed with the primary blocking junction, or insulation, reverse biased at an artificially elevated temperature for 340 hours, at the temperature specified (normally +150°C and at 80 to 85 percent of the rated voltage relevant to the device (V_R, V_Z(min), V_{CB}, V_{AG}, V_{DG}, and V_{GS}).

At the end of the high-temperature test time, as specified, the ambient temperature shall be lowered. The test voltage shall be maintained on the devices until a case temperature of +30°C ±5°C is attained. After this ambient temperature has been established, the bias voltage shall be maintained until testing is performed; testing shall be completed within 24 hours after the removal of power. After removal of the bias voltage, no other voltage shall be applied to the device before taking the post test leakage current measurement. Post test measurements shall be taken as specified.

4. Summary. The following details shall be specified in the applicable detail specification:

a. Test temperature (see 3.).

b. Test conditions: Voltage and terminals to be biased (see 2. and 3.).

c. Test time (see 3.).

d. Pre and post test measurements (see 3. and 3.1).

e. Time for completion of post test measurements, if other than 24 hours (see 3.1).

f. Criteria for failure (see 3.).

METHOD 1051.5

TEMPERATURE CYCLING (AIR TO AIR)

1. Purpose. This test is conducted to determine the resistance of a part to extremes of high and low temperatures, and to the effect of alternate exposures to these extremes.

1.1 Terms and definitions.

1.1.1 Load. The specimens under test and the fixtures holding those specimens during the test. Maximum load shall be determined by using the worst case load temperature with specific specimen loading. Monolithic loads used to simulate loading may not be appropriate when air circulation is reduced by load configuration. The maximum loading must meet the specified conditions.

1.1.2 Monitoring sensor. The temperature sensor that is located and calibrated so as to indicate the same temperature as at the worst case indicator specimen location. The worst case indicator specimen location is identified during the periodic characterization of the worst case load temperature.

1.1.3 Worst case load temperature. The worst case load temperature is the temperature of a specific area in the chamber when measured by thermocouples located at the center and at each corner of the load. The worst case load temperature shall be determined at periodic intervals.

1.1.4 Working zone. The volume in the chamber(s) in which the temperature of the load is controlled within the limits specified in table 1051-I.

1.1.5 Specimen. The device or individual piece being tested.

1.1.6 Transfer time. The elapsed time between specimen removal from one temperature extreme and introduction into the other.

1.1.7 Maximum load. The largest load for which the worst case load temperature meets the timing requirements (see 3.1).

1.1.8 Dwell time. The time from introduction of the load into the chamber until the load is transferred out of the chamber.

2. Apparatus. The chamber(s) used shall be capable of providing and controlling the specified temperatures in the working zone(s) when the chamber is loaded with a maximum load. The thermal capacity and air circulation must enable the working zone and loads to meet the specified conditions and timing (see 3.1). Worst case load temperature shall be continually monitored during test by indicators or recorders reading the monitoring sensor. Direct heat conduction to specimens shall be minimized.

3. Procedure. Specimens shall be placed in such a position with respect to the airstream that there is substantially no obstruction to the flow of air across and around the specimen. When, special mounting is required, it shall be specified. The specimen shall then be subjected to the specified condition for the specified number of cycles performed continuously. This test shall be conducted for a minimum of 20 cycles using test condition C. One cycle consists of steps 1 and 2 or the applicable test condition to be counted as a cycle. Completion of the total number of cycles specified for the test may be interrupted for the purpose of test chamber loading or unloading of device lots or as the result of power or equipment failure. However, if for any reason the number of incomplete cycles exceed 10 percent of the total number of cycles specified, one cycle must be added for each incomplete cycle.

3.1 Timing. The total transfer time from hot to cold or from cold to hot shall not exceed one minute. The load may be transferred when the worst case load temperature is within the limits specified in table 105-I. However, the dwell time shall not be less than 10 minutes and the load shall reach the specified temperature within 15 minutes.

TABLE 1051-I. Temperature-cycling test conditions.

Step	Minutes	Test condition temperature (°C)						
		A	B	C	D	E	F	G
1 Cold	≥ 10	-55 +0 -10	-55 +0 -10	-55 +0 -10	-65 +0 -10	-65 +0 -10	-65 +0 -10	-55 +0 -10
2 Hot	≥ 10	85 +10 -0	125 +15 -0	175 +15 -0	200 +15 -0	300 +15 -0	150 +15 -0	150 +15 -0

NOTE: Steps 1 and 2 may be interchanged. The load temperature may exceed the + or - zero (0) tolerance during the recovery time. Other tolerances shall not be exceeded.

4. Summary. The following details shall be specified in the applicable detail specification:

a. Special mounting, if applicable (see 3.).

b. Test condition letter, if other than test condition C (see 3.).

c. Number of test cycles, if other than 20 cycles (see 3.).

d. End-point measurements and examinations, e.g., end-point electrical measurements, seal test (method 1071), or other acceptance criteria).

METHOD 1054.1

POTTED ENVIRONMENT STRESS TEST

1. Purpose. The purpose of this test is to determine device design susceptibility to intermittent open failures in conformally coated circuit boards environments while under thermal cycle. The destructive effects of tension and compression are magnified in the potted condition allowing for early detection of design weakness.

2. Equipment.

a. Container of three cubic inches minimum with rigid walls of .125 inch (3.18 mm) minimum.

b. Devices for testing corrected to a common bussbar arranged in a common cathode or common anode configuration (see figure 1054-1).

c. Thermal cycling chamber.

d. Hot plate capable of maintaining +70°C.

e. Curve tracer, Tektronix 576 or equivalent.

f. Potting medium, Emerson and Cuming Stycast 2851 MT or equivalent.

3. Procedure:

a. Place devices in a common connection configuration into the container with provisions made to ensure device clearance of .125 inch (3.18 mm) minimum from the container walls.

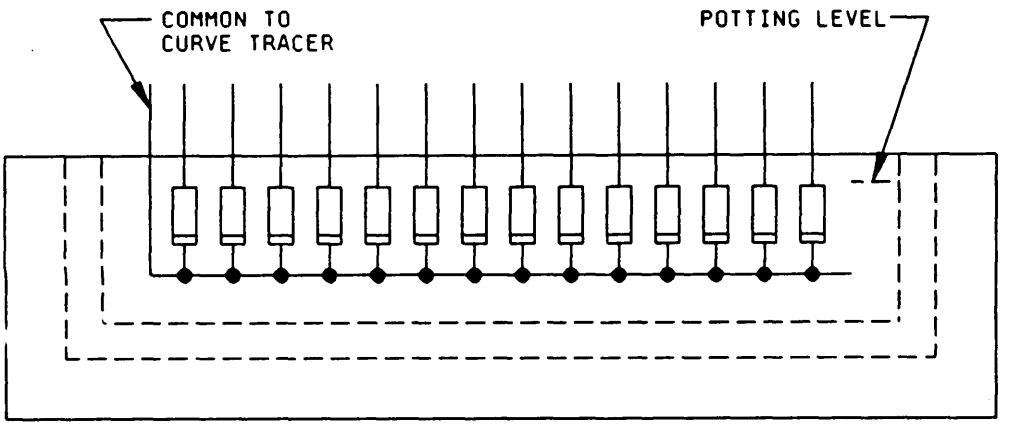

FIGURE 1054-1. Potted diodes.

b. Pour stycast potting compound into shell and allow to cure while following all manufacturer's recommendations.

c. Place cured assembly on a hot plate and allow the assembly to reach thermal equilibrium of +70°C. Unless otherwise specified, observe the forward voltage trace of each device at a current level of 100 mA. Forward voltage trace should show no incidence of instability or open condition. Record all failures by serial number.

d. Allow assembly to cool at room temperature and place into a thermal shock chamber to perform 20 shocks in accordance with method 1051 herein. Remove assembly and allow to reach room temperature.

e. Repeat 3.c. and record failures.

METHOD 1055.1

MONITORED MISSION TEMPERATURE CYCLE

1. Purpose. This test is to determine the ability of devices to withstand the effect of thermal stress and rapid dimensional change on internal structural elements caused by the application of power in rapidly changing temperature environments as in mission profile system testing.

2. Apparatus. The equipment required shall consist of that listed below and shall have the stated capabilities.

   a. A chamber of sufficient temperature range and change rate capability with cabling exiting through insulated barriers to external bias and monitoring electronics. Cabling for all monitoring equipment shall provide Kelvin connections.

   b. Electronic regulated power supply(s) capable of maintaining the stated bias tolerances.

   c. Electronic voltage monitoring device with capability of indicating an open circuit of 20 µs or more in duration.

3. Procedure.

   a. Devices conforming to all electrical and mechanical parameter requirements shall be first subjected to high temperature stabilization bake of method 1032 herein. They shall then be subjected to non-operational thermal shock of method 1051 herein, except that no dwell time is required at +25°C. Test condition "C" shall be +175°C, +5°C, -0°C. Temperature shall remain at the stabilized extremes for 10 minutes minimum.

   b. Electrical measurements shall be performed to ensure that proceeding to the monitored thermal cycle portion of this test all devices have remained within specification.

   c. Unless otherwise specified, the temperature extremes shall be as stated below (from worse case mission profile requirements of table I in MIL-STD-781).

   d. The temperature and operating profile shall be specified on figure 1055-1. Temperature change rate shall average not less than 5°C per minute, but not greater than 10°C per minute.

   e. The device(s) shall be placed individually or in series connection within the chamber. The device(s) shall be connected to a constant current power supply capable of supplying current to raise the device junction(s) to +125°C minimum, +150°C maximum temperature during the high temperature portion of each cycle.

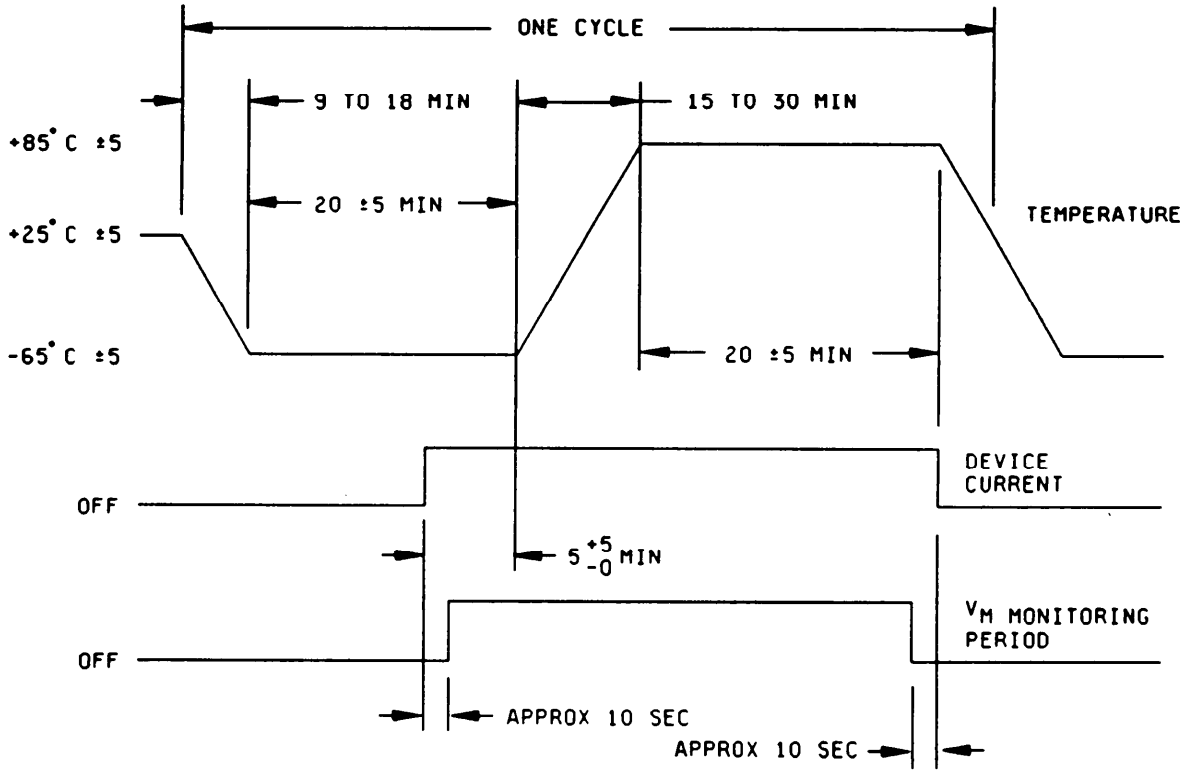

FIGURE 1055-1. Monitored mission cycle.

3.1 Electrical monitoring. Connect electrical monitoring volt meter leads to the extremes of the device(s) and series resistor (see figure 1055-2). Apply the current to raise each junction temperature approximately +50°C. The value of R shall be chosen to cause a 10 ±3 percent increase in monitoring voltage, V_M, if open circuit occurs. Open switch S1 and verify an increase in V_M to verify circuit operation. Remove power.

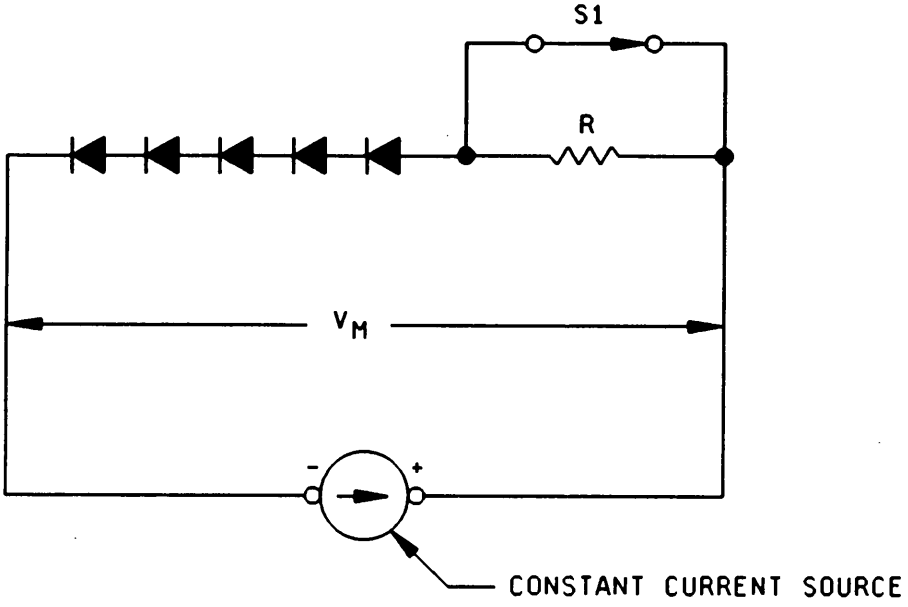

FIGURE 1055-2. Monitored mission cycle.

3.2 Monitoring voltage increase. Close S1 and perform six cycles of figure 1055-1 while monitoring for increases in voltage level above the highest (cold temperature) value.

3.3 Failures. Failures in the first two cycles may be considered non-chargeable de-bug events, if analysis finds fault with test circuitry. The last four cycles shall be failure free.

NOTE: Unless otherwise specified, a momentary, or continuous, open circuit (indicated by an increase in the monitored voltage) in any of the last four cycles, shall be considered failure.

METHOD 1056.7

THERMAL SHOCK (LIQUID TO LIQUID)

1. Purpose. This test is conducted to determine the resistance of the part to sudden exposure to extreme changes in temperature and to the effect of alternate exposures to these extremes.

1.1 Terms and definitions.

1.1.1 Cycle. A cycle consists of starting at ambient room temperature, proceeding to step 1, then to step 2, or alternately proceeding to step 2, then to step 1, and then back to ambient room temperature without interruption.

1.1.2 Dwell time. The total time the load is immersed in the bath.

1.1.3 Load. The DUTS and the fixtures holding those devices.

1.1.4 Maximum load. The maximum mass of devices and fixtures that can be placed in the bath while maintaining specified temperatures and times.

1.1.5 Specimen. The device or individual piece being tested.

1.1.6 Transfer time. The elapsed time measured from removal of the load from one bath until insertion in the other bath.

1.1.7 Worst case load temperature. The body temperature of a specific device located at the center of the load.

2. Apparatus. The baths used shall be capable of providing and controlling the specified temperatures in the working zone(s) when the bath is loaded with a maximun load. The thermal capacity and liquid circulation must enable the working zone and loads to meet the specified conditions and timing (see 3.1). Worst case load temperature shall be continually monitored during test by indicators or recorders reading the monitoring sensor(s). The worst case load temperature under maximum load conditions and configuration shall be verified as needed to validate bath performance. Perfluorocarbons that meet the physical property requirements of table 1056.II shall be used for conditions B and C.

3. Procedure. Specimens shall be placed in the bath in a position so that the flow of liquid across and around them is substantially unobstructed. The load shall then be subjected to condition A or as otherwise specified (see 4b) of table 1056.I for a duration of 15 cycles. Completion of the total number of cycles specified for the test may be interrupted for the purpose of loading or unloading of device lots or as the result of power or equipment failure. However, if the number of interruptions for any given test exceeds 10 percent of the total rider of cycles specified, the test must be restarted from the beginning.

3.1 Timing. The total transfer time from hot to cold or from cold to hot shall not exceed 10 seconds. The load may be transferred when the worst case load temperature is within the limits specified in table 1056.II. However, the dwell time shall not be less than 2 minutes and the load shall reach the specified temperature within 5 minutes.

4. Summary. The following details shall be specified in the applicable detail specification.

a. Special mounting, if applicable.

b. Test condition, if other than test condition B (see 3.).

c. Number of test cycles, if other than 15 cycles (see 3.).

d. End-point measurements and examinations such as end-point electrical measurements, seal test (method 1071), or other acceptance criteria).

TABLE 1056.I. Physical property requirements of perfluorocarbon fluids. 1/

Test condition		B	C	ASTM test method
Step 1	Boiling point, °C	>125	>150	D1120
	Density at 25°C gm/ml	>1.6		D941
	Dielectric strength volts/mil	>300		D877
	Residue, microgram/gram	<50		D2109
	Appearance	Clear, colorless liquid		Not applicable
Step 2	Density at 25°C gm/ml	>1.6		D941
	Dielectric strength volts/mil	>300		D877
	Residue, microgram/gram	<50		D2109
	Appearance	Clear, colorless liquid		Not applicable

1/ The perfluorocarbon used shall have a viscosity less than or equal to the thermal shock equipment manufacturers recommended viscosity at the minimum temperature.

TABLE 1056.II. Thermal shock temperature tolerances and suggested fluids.

Test conditions		A and B	C	D
		Temperature	Temperature	Temperature
Step 1	Temperature tolerance, °C	100 +10 -2	125 +10 -0	150 +10 -0
	Recommended fluid	Water 2/ or perfluorocarbon 3/	Perfluorocarbon 3/	Perfluorocarbon 3/
Step 2	Temperature tolerance, °C	-0 +2 -10	-55 +0 -10	-65 +0 -10
	Recommended fluid	Water 2/ or perfluorocarbon 3/	Perfluorocarbon 3/	Perfluorocarbon 3/

1/ Ethylene glycol shall not be used as a thermal shock test fluid.
2/ Water is indicated as an acceptable fluid for this temperature range. Its suitability chemically shall be established prior to use. When water is used as the fluid for condition A and the specified temperature tolerances are insufficient due to altitude considerations, the following alternate test conditions may be used:

a. Temperature: +100°C -6°C, 0°C +6°C.

b. Cycles shall be increased to 20.

3/ Perfluorocarbons contain no chlorine or hydrogen.

METHOD 1061.1

TEMPERATURE MEASUREMENT, CASE AND STUD

1. Purpose. This proposal covers a method of measuring case temperature of hex-base devices.

2. Test equipment.

2.1 Type of thermocouple. The thermocouple material shall be copper-constantan, as recommended by the "Standard Handbook for Electrical Engineers", for the range of -190°C to +350°C. The wire size shall be no larger than AWG size 30. The junction of the thermocouple shall be welded together to form a bead rather than soldered or twisted.

2.2 Accuracy. The thermocouple shall have an accuracy of ±.5°C. Under load conditions, slight variations in the temperature of different points on the case may reduce this accuracy to ±1.0°C for convection cooling, and ±2.0°C for forced air ventilation.

3. Procedure.

3.1 Method of mounting. A small hole, just large enough to insert the thermocouple, shall be drilled approximately .031 inch (0.79 mm) deep into the flat of the case hex at a point chosen by the manufacturer. The edge of the hole should then be peened with a small center punch to force a rigid mechanical contact with the welded bead of the thermocouple. If forced air ventilation is used, the thermocouple shall be mounted away from the air stream and the thermocouple leads close to the junction shall be shielded.

3.2 Other methods of mounting. Other methods of mounting thermocouple, with the possible exception of the thermocouple welded directly to the case, will result in temperature readings lower than the actual temperature. These deviations will result from:

a. Inadequate contact with the case using cemented thermocouples.

b. External heat sink in contact with the thermocouple using pressure contacts.

4. Summary. The following conditions shall be specified in the detail specification:

a. Method of mounting (see 3.).

b. Test equipment, if required.

METHOD 1066.1

DEW POINT

1. Purpose. The purpose of this test is to monitor the device parameter for a discontinuity under the specified conditions.

2. Apparatus. The apparatus used in this test shall be capable of varying the temperature from the specified high temperature to -65°C and return to the specified high temperature while the parameter is being measured.

3. Procedure. The voltage and current specified in the detail specification shall be applied to the terminals and the parameter monitored from the specified high temperature to -65°C and return to the specified high temperature. The dew point temperature is indicated by a sharp discontinuity in the parameter being measured with respect to temperature. If no discontinuity is observed, it shall be assumed that the dew point is at a temperature lower than -65°C and the DUT is acceptable.

4. Summary. The following conditions shall be specified in the detail specification:

a. Test temperature (high) (see 2.).

b. Test voltage and current (see 3.).

c. Test parameter (see 3.).

METHOD 1071.5

HERMETIC SEAL

1. Purpose. The purpose of this test is to determine the hermeticity of semiconductor devices with designed internal cavities.

2. Definitions.

a. Standard leak rate. Standard leak rate is defined as that quantity of dry air at +25°C in atmospheric cubic centimeters flowing through a leak or multiple leak paths per second when the high-pressure side is at 15 psi (101 kPa) and the low-pressure side is at a pressure of not greater than .0193 psi (133 pA). Standard leak rate shall be expressed in units of atmospheric cubic centimeters per second (atm cm^3/s air).

b. Measured leak rate. Measured leak rate (R_1) is defined as the leak rate of a given package as measured under specified conditions and employing a specified test medium. Measured leak rate shall be expressed in units of atmospheric cubic centimeters per second (atm cm^3/s of the gas medium used for the test). For purposes of comparison with rates determined by other methods of testing, the measured leak rates must be converted to the equivalent standard leak rates, (converted to air equivalents).

c. Equivalent standard leak rate. The equivalent standard leak rate (L) of a given package, with a measured leak rate (R_1), is defined as the leak rate of the same package with the same leak geometry, that would exist under the standard leak rate. The equivalent standard leak rate shall be expressed in units of atmospheric cubic centimeters per second (atm cm^3/s) (air).

NOTE : The leak rate measurements are not necessarily performed with a one atmosphere differential, as implied by the standard leak rate. The equivalent conversion represents gas medium only.

3. Test conditions.

a. Gross leaks. Test conditions A, B, C, D, E, J, K, or L should be specified for gross leaks.

(1) Test condition A: Radioisotope wet gross leak test (see 4.).

(2) Test condition B: Radioisotope dry gross leak test (see S.).

(3) Test condition C: Fluorocarbon gross leak (see 6.).

(4) Test condition D: Bubble test (see 3b(1)).

(5) Test condition E: Penetrant dye gross leak (see 8.).

(6) Test condition J: Height gain gross leak (see 11.).

(7) Test condition K: Fluorocarbon vapor detection gross leak (see 12.).

(8) Test condition L: Optical gross leak (see 13).

b. Gross leaks. Test condition D may be specified when a sensitivity of 1 x 10^{-3} atm cm^3/s or greater will satisfy reliability requirements.

This condition shall not be used for devices that have internal free volumes of less than 1 cm^3.

c. Fine leak. Test condition G, H, or L should be specified for the fine leak test.

(1) Test condition G: Radioisotope fine leak test (see 9.).

(2) Test conditions H_1 and H_2: Tracer gas leak test (Helium) (see 10.).

(3) Test conditions L_2: Optical fine leak test (see 13.).

d. Obsolete.

e. Fine and gross leak test procedure. Unless otherwise specified by applicable detail specification, tests shall be conducted in accordance with table 1071-I. When specified (see 13.) measurements after test shall be conducted following the leak test procedures. Where bomb pressure specified exceeds the device package capability, alternate pressure, exposure time, and dwell time conditions may be used provided they satisfy the leak rate, pressure, and time relationships which apply and provided no less than 30 psi (207 kPa) bomb pressure is applied in any case.

Fine and gross leak tests shall be conducted in accordance with the requirements and procedures of the specified test condition. Testing order shall utilize only the all-dry gas tests first, followed by any liquid immersion gross leak test (i.e.; the option to use the radioisotope gross and fine leak test conditions B and G_1, may be used together, or in succession, as long as the minimum test requirements are met). If any other gross leak test is used, (condition A, C, D, E, F, J, or K), the sequence of testing must use the dry gas fine leak test first, followed by the gross leak test except in accordance with 14a. When batch testing (more than one device in the leak detector at one time) is used in performing test condition G, H_1, H_2, and a reject condition occurs it shall be noted as a batch failure. Each device may then be tested individually one time for acceptance if all devices in the batch are retested within one hour after removal from the tracer gas pressurization chamber. For condition G, only, devices may be batch retested for acceptance providing all retesting is completed within one hour after removal from the tracer gas pressurization chamber. For condition K only, devices that are batch tested, and indicate a reject condition, may be retested individually one time using the procedure of 12.2 herein, except that repressurization is not required if the devices are immersed in detector fluid within 20 seconds after completion of the first test, and they remain in the bath until retest.

TABLE 1071-I. Required test sequence.

Volume (cm^3)	Fine leak condition	Gross leak condition
≤0.4	G, H_1, H_2	A, C, D, E, J 1/, K 2/
>0.4	G, H_1, H_2	A, B, C, D, E, K
>0.4	J 3/	J 3/

1/ Condition J cannot be used for packages whose internal volume is <0.001 cm^3.
2/ Condition D cannot be used for packages whose internal volume is ≤ 1 cm^3.
3/ Condition J may be used as a single test for devices with an internal cavity volume of >0.4 cm^3 provided the specified requirements can be satisfied by a leak rate of 1×10^{-6} atm cm^3/s.

4. Test condition A, radioisotope wet gross leak test.

4.1 Apparatus. The apparatus required for the seal test shall be as follows:

a. Radioactive tracer gas activation console.

b. Counting equipment consisting of a scintillation crystal, photomultiplier tube, preamplifier, ratemeter, and krypton-85 reference standards. The counting station shall be of sufficient sensitivity to determine through the device wall the radiation level of any krypton-85 tracer gas present within the device. The counting station shall have a minimum sensitivity corresponding to a leak rate of 10^{-9} atm cc/s of krypton-85 and shall be calibrated at least once every working shift using krypton-85 reference standards and following the equipment manufacturer's instruction.

c. A container of sufficient volume to allow the devices to be covered with oil and to be degreased with a suitable solvent.

d. Solutions:

(1) Hydrocarbon vacuum pump oil. The solution shall be kept clean and free of contaminants.

(2) Solvent capable of decreasing the devices.

e. A tracer gas consisting of a mixture of krypton-85 and dry nitrogen. The concentration of krypton-85 in dry nitrogen shall be no less than 100 microcuries per atmospheric cubic centimeter. This value shall be determined at least once each 30 days, following manufacturer's procedure, and recorded in accordance with the calibration requirements of this standard.

4.2 Procedure. The devices shall be immersed in the oil and evacuated to a pressure of 10 torr or less, for 10 minutes, and then pressurized for one hour at 310 kPa (45 psi) minimum. The devices shall be removed from the oil and flushed with solvent to remove all of the surface oil. The devices shall then be placed in the radioisotope pressurization tank, and the tank evacuated to a pressure of 9.72×10^{-3} psi (67 Pa). The devices shall then be pressurized to a minimum of three atmospheres absolute pressure of krypton-85/nitrogen gas mixture for two to five minutes. The gas mixture shall then be evacuated to storage until a pressure of 0.0387 to 0.0483 psi (267 to 333 Pa) maximum exists in the tank. This evacuation shall be completed in two minutes maximum. The tank shall then be filled with air, and the devices immediately removed from the tank and leak tested within 15 minutes after gas exposure, with a scintillation crystal equipped counting station. Any device indicating 1,000 c/m or greater above the ambient background of the counting station shall be considered a gross leak.

4.2.1 Personnel precautions. Government regulations require a license for the possession and use of krypton-85 leak test equipment. These regulations should be followed carefully. The personnel should be properly instructed and monitored in accordance with the licensing requirements.

5. Test condition B, radioisotope dry gross leak. This test shall be only to test devices that internally contain some krypton-85 absorbing medium, such as electrical insulation, organic, or molecular sieve material. This test shall be permitted only if the following requirements are met:

a. A 5 to 10 mil diameter hole shall be made in a representative unit of the devices to be tested.

b. The device shall be subjected to this test condition with a count rate from 200 to 250 counts per minute above ambient background. The count rate shall be made two hours after removal from the activation tank. If the device fails, this test condition may be used, but only for those devices represented by the test unit. If the device does not fail, this test condition shall not be used.

5.1 Apparatus. Apparatus for this test shall consist of the following:

a. Radioactive tracer gas activation console containing krypton-85/dry nitrogen gas mixture.

b. Counting station with a minimum sensitivity of 12,000 counts per minute per microcurie of krypton-85 tracer gas and a minimum detectable count rate of 100 counts per minute above background level.

c. Tracer gas mixture of krypton-85/dry nitrogen with a minimum allowable specific activity of 100 microcuries per atmospheric cubic centimeter. The specific activity of the krypton-85/dry nitrogen mixture shall be determined on a once-a-month basis as a minimum.

5.2 Procedure. The devices shall be placed in a radioactive tracer gas activation tank and the tank shall be evacuated to a pressure not to exceed 9.72×10^{-3} psi (67 Pa). The devices shall then be subjected to a minimum of 25 psi (173 kPag) of krypton-85/dry nitrogen gas mixture for 2 to 5 minutes. The gas mixture shall then be evacuated to storage until a pressure of 0.0972 psi (670 Pa) maximum exists in the activation tank. This evacuation shall be complete in three minutes maximum. The activation tank shall then be backfilled with air (air wash). The devices shall then be removed from the activation tank and leak tested within 30 minutes after gas exposure with a scintillation-crystal-equipped counting station. Any device indicating 200 counts per minute or greater above the ambient background of the counting station shall be considered a gross leak failure.

5.2.1 Personnel precautions. See 4.2.1.

6. Test condition C, liquid (fluorocarbon) gross leak.

6.1 Apparatus. Apparatus for this test shall consist of the following:

a. A vacuum/pressure chamber for the evacuation and subsequent pressure bombing of devices up to 90 psi (618 kPa) for a maximum of 24 hours.

b. A suitable observation container with provisions to maintain the indicator fluid at a temperature of +125°C ±5°C (+lOO°C for Germanium transistors with temperature rating of +lOO°C maximum) and a filtration system capable of removing particles greater than one micrometer in size from the fluid.

c. A magnifier capable of magnifying an object 1.5 to 30 times its normal size (4 to 120 diopters) for observation of bubbles emanating from devices when immersed in the indicator fluid.

d. Sources of type I detector fluids and type II indicator fluids as specified in table 1071-II.

TABLE 1071-II. Physical property requirements of perfluorocarbon fluids. 1/

Property	Type I	Type II	Type III	ASTM test method
Boiling point (°C)	50-95	140-200	50-110	D-1120
Surface tension (dynes/cm) at +25°C		< 20		D-971 D-1331
Density at +25°C (gm/ml)	> 1.6	> 1.6	> 1.6	D-941
Density at +125°C (gm/ml)		> 1.5		D-941
Dielectric strength (volts/mil)	> 300	> 300	> 300	877
Residue (µgm/gm)	< 50	< 50	< 50	D-2109
Appearance	Clear colorless			NA

1/ Perfluorocarbons contain no chlorine or hydrogen.

TABLE 1071-III. Condition C and K pressurization conditions.

Pressure psia (minimum)	Minimum pressurization time (hour)	
	Condition C	Condition K
30	23.5	12
45	8	4
60	4	2
75	2	1
90	1	0.5
105	0.5	N/A

e. A lighting source capable of producing a collimated beam of at least 161,000 luxes (15,000 foot candles) in air at a distance equal to that which the most distant device in the bath will be from the source. The lighting source shall not require calibration, but shall be placed for best detection of bubbles, without excessive incident or reflective glare being directed toward observer.

f. Suitable calibrated instruments to indicate that test temperatures, pressures, and times are as specified.

g. Suitable fixtures to hold the device(s) in the indicator fluid.

6.2 Procedure. The devices shall be placed in a vacuum/pressure chamber and the pressure reduced to 0.0972 psi (670 Pa) or less and maintained for 30 minutes minimum, except for devices with an internal volume ≥ 0.1 cm^3 this vacuum cycle may be omitted. A sufficient amount of type I detector fluid shall be admitted to cover the devices. When the vacuum cycle is performed, the fluid will be admitted after the minimum 30 minute period but before breaking the vacuum. The devices shall then be pressurized in accordance with table 1071-III. When the pressurization period is complete the pressure shall be released and the devices removed from the chamber without being removed from a bath of detector fluid for greater than 20 seconds. A holding bath may be another vessel or storage tank. When the devices are removed from the bath they shall be dried for 2 ±1 minutes in air prior to immersion in type II indicator fluid, which shall be maintained at +125°C ±5°C. The devices shall be immersed with the uppermost portion at a minimum depth of 2 inches (50.80 mm) below the surface of the indicator fluid, one at a time or in such a configuration that a single bubble from a single device out of a group under observation may be clearly observed as to its occurrence and source. Unless rejected earlier, the device shall be observed against a dull, nonreflective black background through the magnifier, while illuminated by the lighting source, from the instant of immersion until expiration of a 30-second minimum observation period.

6.2.1 Failure criteria. A definite stream of bubbles, or two or more bubbles originating from the same point shall be cause for rejection.

6.2.2 Precautions. The following precautions shall be observed in conducting the fluorocarbon gross leak test:

a. Perfluorocarbons fluids shall be filtered through a filter system capable of removing particles greater than one micrometer prior to use. Bulk filtering and storage is permissible. Liquid which has accumulated observable quantities of particulate matter during use shall be discarded or reclaimed by filtration for re-use. Precaution should be taken to prevent contamination.

b. Observation container shall be filled to assure coverage of the device to a minimum of 2 inches (50.80 mm).

c. Devices to be tested shall be free of foreign materials on the surface, including conformal coatings and any markings which may contribute to erroneous test results.

d. Precaution should be taken to prevent operator injury due to package rupture or violent evolution of bomb fluid when testing large packages.

7. Test condition D, bubble test (type II indicator fluid as specified in table 1071-II.) (NOTE: These fluids replace ethylene glycol as a medium for the gross leak bubble test.)

7.1 Apparatus. Apparatus for this test shall consist of the following:

a. A device internal free volume of greater than 1 cm^3.

b. Container of sufficient volume to allow the devices to be covered with solution to a minimum depth of 2 inches (50.80, mm). The container shall have flat sides to minimize reflections and distortions (example of an acceptable container is a battery jar).

c. Liquid of sufficient volume maintained at no less than +125°C ±5°C for the duration of the test.

d. A light source capable of producing a collimated beam of at least 161,000 luxes (15,000 foot candles) in air at a distance equal to that which the most distant device in the bath will be from the source. The lighting source shall not require calibration.

7.2 Procedure. The devices shall be placed in the container of liquid at +125°C, immersed to a minimum depth of 2 inches (50.80 mm) for a minimum of one minute, and observed during the entire immersion period for bubbles or bubbling. Side lighting (see 7.1d) shall be used to facilitate viewing the bubbles, and the devices shall be observed against a black nonreflective background.

7.2.1 Failure criteria. Any device that shows one or more nonreflective attached growing bubbles, one continuous stream, or a succession of two or more from the same point shall be considered a failure.

8. Test condition E, penetrant dye gross leak.

8.1 Apparatus. Apparatus for this test shall consist of the following:

a. Ultraviolet light source with peak radiation at approximately the frequency causing maximum reflection of the dye (3650Å for Zyglo; 4935Å for Flurosecein; 5560 Å for Rhodamine B).

b. Pressure chamber capable of maintaining 104 psi (719 kPa).

c. Solution of fluorescent dye, (such as Rhodamine B, Fluorescein, Dye-check, Zyglo, FL-50 or equivalent), mixed in accordance with the manufacturer's specification.

d. A magnifier capable of magnifying an object 1.5 to 30 times its nominal size (4 to 120 diopters).

8.2 Procedure. This test shall be permitted only on transparent glass encased devices or for destructive verification of opaque devices. The pressure chamber shall be filled with the dye solution to a depth sufficient to completely cover all the devices. The devices shall be placed in the solution and the chamber pressurized at 104 psi (719 kPa) minimum for three hour minimum. For device packages which will not withstand 105 psi (724 kPa), 60 psi (414 kPa) minimum for 10 hours may be used. The devices shall then be removed and carefully washed, using a suitable solvent for the dye used, followed by an air jet dry. Transparent devices may be examined under magnification capable of magnifying an object up to 1.5 times its normal size (4 diopters) using ultraviolet light source of appropriate frequency for evidence of the dye penetration. For the destructive examination of opaque devices, the devices shall be delidded and examined internally under the magnifier using an ultraviolet light source of appropriate frequency.

8.2.1 Failure criteria. Any evidence of dye in the cavity of the device shall constitute a failure.

9. Test condition G_1, radioisotope fine leak.

9.1 Apparatus. Apparatus for this test shall be as in 5.1.

9.2 Activation parameters. The activation pressure and soak time shall be determined in accordance with the following equation:

$$Q_s = \frac{R}{S\ K\ T\ \overline{P}\ t} \qquad (1)$$

The parameters of equation (1) are defined as follows:

Q_s = The maximum leak rate allowable, in atm cc/s Kr, for the devices to be tested.

R = Counts per minute above the ambient background after activation if the device leak rate were exactly equal to Q_s. This is the reject count above the background of both the counting equipment and the component, if it has been through prior radioactive leak tests.

S = The specific activity, in microcuries per atmospheric cubic centimeter, of the krypton-85 tracer gas in the activation system.

K = The overall counting efficiency of the scintillation crystal in counts per minute per microcurie of krypton-85 in the internal void of the specific component being evaluated. This factor depends upon component configuration and dimensions of the scintillation crystal. The counting efficiency shall be determined in accordance with 9.3.

T = Soak time, in hours, that the devices are to be activated.

$\overline{P}$ = $P_e 2 \quad P_i 2$, where P_e is the activation pressure in atmospheres absolute, and P_i is the original internal pressure of the devices in atmospheres absolute. The activation pressure (P_e) may be established by specification or if a convenient soak time (T) has been established, the activation pressure (P_e) can be adjusted to satisfy equation (1).

t = Conversion of hours to seconds and is equal to 3,600 seconds per hour.

NOTE: The complete version of equation (1) contains a factor $(P_0^2 - (\Delta P)^2)$ in the numerator which is a correction factor for elevation above sea level. P_0 is sea level pressure in atmospheres absolute and ΔP is the difference in pressure, in atmospheres between the actual pressure at the test station and sea level pressure. For the purpose of this test method, this factor has been dropped.

9.3 Determination of counting efficiency (k). The counting efficiency (k) of equation (1) shall be determined as follows:

a. Five representative units of the device type being tested shall be tubulated and the internal void of the device shall be backfilled through the tabulation with a known volume and known specific activity of krypton-85 tracer gas and the tabulation shall be sealed off.

b. The counts per minute shall be directly read in the shielded scintillation crystal of the counting station in which the devices are read. From this value, the counting efficiency, in counts per minute per microcurie, shall be calculated.

9.4 Evaluation of surface sorption. All device encapsulations consisting of glass, metal, and ceramic or combinations thereof, including coatings and external sealants, shall be evaluated for surface sorption of krypton-85 before establishing the leak test parameters. Representative samples of the questionable material shall be subjected to the predetermined pressure and time conditions established for the device configuration as specified by 9.2. The samples shall then be counted every 10 minutes, with count rates noted, until the count rate becomes asymptotic with time. (This is the point in time at which surface sorption is no longer a problem.) This time lapse shall be noted and shall determine the "wait time" specified in 9.5.

9.5 Procedure. The devices shall be placed in the radioactive tracer gas activation tank. The activation chamber may be partially filled with inert material to reduce pumpdown time. The tank shall be evacuated to 9.7×10^{-3} psi (67 Pa). The devices shall be subjected to a minimum of 29 psi (203 kPa) absolute pressure of krypton-85/dry nitrogen mixture of 12 minutes. Actual pressure and soak time shall be determined in accordance with 9.2. The R value in counts per minute shall not be less than 600 above background. The krypton-85/dry nitrogen gas mixture shall be evacuated to storage until 9.7×10^{-3} psi (67 Pa) to 0.039 psi (270 Pa) pressure exists in the activation tank. The storage cycle shall be completed in three minutes maximum as measured from the end of the activation cycle or from the time the activation tank pressure reaches 60 psi (414 kPa) if a higher bombing pressure is used. The activation tank shall then immediately be backfilled with air (air wash). The devices shall then be removed from the activation tank and leak tested within one hour after gas exposure with a scintillation-crystal-equipped counting station. Device encapsulations that come under the requirements of 9.4 shall be exposed to ambient air for a time not less than the "wait time" determined by 9.4. In no case will the time between removal from the activation chamber and test exceed one hour. This air exposure shall be performed after gas exposure but before determining leak rate with the counting station. Device encapsulations that do not come under the requirements of 9.4 may be tested without a "wait time". (The number of devices removed from pressurization for leak testing shall be limited such that the test of the last device can be compteted within one hour.) The actual leak rate of the component shall be calculated with the following equation:

$$Q = \frac{(\text{Actual readout in net counts per minute}) \times Q_s}{R} \qquad (2)$$

Where Q = Actual leak rate in atm cc/s, and Q_s and R are defined in 9.2.

NOTE: CAUTION. Discharge of krypton 85 into the atmosphere must not exceed limits imposed by local and Federal regulations.

9.5.1 Failure criteria. Unless otherwise specified, devices that exhibit a leak rate equal to or greater than the test limits of table 1071-IV shall be considered as failures.

NOTE: CAUTION. Devices which do not exhibit a leak rate sufficient to fail seal test, may retain radioactive tracer gas in sufficient concentration to cause soft errors in complex, small geometry devices.

TABLE 1071-IV. Test limits for radioisotope fine leak method.

Volume of package (cc)	Q_S
< 0.01	1×10^{-8}
≥ 0.01, ≤ 0.4	5×10^{-8}
> 0.4	5×10^{-7}

9.5.2 Personnel precautions. See 4.2.1.

10. Test condition H_1 or H_2 tracer gas (H_6) fine leak. Test condition H_1 is a "fixed" method with specified conditions in accordance with table 1071-V that will ensure the test sensitivity necessary to detect the required measured leak rate (R_1). Test condition H_2 is a "flexible" method that allows the variance of test conditions in accordance with the formula of 10.2.1.2 to detect the specified equivalent standard leak rate (L) at a predetermined leak rate (R_1).

10.1 Apparatus. Apparatus required for test conditions H_1 and H_2 shall consist of suitable pressure and vacuum chambers and a mass spectrometer-type leak detector properly calibrated for a helium leak rate sensitivity sufficient to read measured helium leak rates of 1×10^{-9} atm cm^3/s and greater. The volume of the chamber used for leak rate measurement should be held to the minimum practical, since this chamber volume has an adverse effect on sensitivity limits. The leak detector indicator shall be calibrated using a diffusion-type calibrated standard leak at least once every working shift.

10.2 Procedure applicable to "fixed" and "flexible" methods. The completed devices(s) shall be placed in a sealed chamber which is then pressurized with a tracer gas of 100 +0, -5 percent helium for the required time and pressure. The pressure shall then be relieved (an optional air nitrogen wash may be applied) and each specimen transferred to another chamber or chambers which are connected to the evacuating system and a mass-spectrometer-type leak detector. When the chamber(s) is evacuated, any tracer gas which was previously forced into the specimen will thus be drawn out and indicated by the leak detector as a measured leak rate (R_1). (The number of devices removed from pressurization for leak testing shall be limited such that the test of the last device can be completed within 60 minutes for test condition H_1 or within the chosen value of dwell time t_2 for test condition H_2.)

10.2.1 Evaluation of surface sorption. All device encapsulations consisting of glass, metal, and ceramic or combinations thereof including coatings and external sealants, shall be evaluated for surface sorption of helium before establishing the leak test parameters. Representative specimens of the questionable devices should be opened and all parts of each device as a unit shall be subjected to the predetermined pressure and time conditions established for the device configuration as specified in table 1071-V and 10.2.1.2. The measured leak rate for each device shall be monitored and the lapsed time shall be determined for the indicated leak rate to fall to ≤ 0.5 R_1 as specified in table 1071-V for test condition H_1 or as predetermined for test condition H_2. The average of the lapsed time following the release of pressure will determine the minimum usable dwell time. Note that the sensitivity of measurement increases as this background indicated-leak-rate decreases relative to the R_1 reject level. Alternately, whole (unopened) specimens of the questionable devices shall be subjected to the same process; then, the shorted value of lapsed time so obtained will determine the minimum dwell time. The fixed method will not be used if the consequent dwell time exceeds the value specified in table 1071-V. It is noted that sorption may vary with pressure and time of exposure so that some trial may be required before satisfactory exposure values are obtained.

10.2.1.1 Test condition H_1, fixed method. The device(s) shall be tested using the appropriate conditions specified in table 1071-V for the internal cavity volumes of the package under test. The t_1 is the time under pressure and time t_2 is the maximum time allowed after the release of pressure before the device shall be read. The fixed method shall not be used if the maximum standard leak rate limit given in the detail specification is less than the limits specified herein for the flexible method.

TABLE 1071-V. Fixed conditions for test condition H_1.

Volume of package (cm^3)	Bomb condition			R_1 reject limit (atm cm^3/s)
	kPa ±15 (psi) ±2	Exposure time in hours (t_1) (+1.0 - 0.0)	Maximum dwell time (hour)	
< 0.05	517 (75)	2	1	5×10^{-8}
> 0.05 < 0.5	517 (75)	4	1	5×10^{-8}
> 0.5 < 1.0	310 (45)	2	1	1×10^{-7}
> 1.0 < 10.0	310 (45)	5	1	5×10^{-6}
> 10.0 < 20.0	310 (45)	10	1	5×10^{-6}

10.2.1.2 Test condition H_2, flexible method. Values for bomb pressure, exposure time, and dwell time shall be chosen such that actual measured tracer gas leak rate (R_1) readings obtained for the DUTS (if defective) will be greater than the minimum detectable leak rate capability of a mass spectrometer. The devices shall be subjected to a minimum of 29 psi (203 kPa) of helium atmosphere. The chosen values of pressurization and time of pressurization, in conjunction with the value of the internal volume of the device package to be tested and the maximum equivalent standard leak rate (L) limit as specified in 10.2.2, shall be used to calculate the measured leak rate (R_1) limit using the following formula:

$$R_1 \frac{2.69\ L\ P_e}{P_o} \left[1 - \exp - \left(\frac{2.69\ L}{P_o\ V} \cdot t_1\right)\right] \exp - \left(\frac{2.69\ L}{P_o\ V} \cdot t_2\right) \qquad (3)$$

Where: R_1 = The measured leak rate of tracer gas (H_e) through the leak in atm cm^3/s.

L = The equivalent standard leak rate in atm cm^3/s.

P_e = The pressure of exposure in atmospheres absolute.

P_o = 1 standard atmosphere.

t_1 = The time of exposure to P_e in seconds.

t_2 = The dwell time between release of pressure and leak detection in seconds.

v = The internal volume of the device package cavity in cubic centimeters.

The minimum detectable leak rate shall be determined as in 10.2.1 and shall be taken as the indicated value corresponding to a lapsed time $t_0 < t_2$. The lapsed time to shall be taken as the minimum usable dwell time, and leak testing shall be accomplished in the interval between t_0 and t_2. Alternately, pressurization parameters may be chosen from the fine leak approximate solution-of equation (3) for $L < 1 \times 10^{-5}$ as

$$L = \frac{P_o}{2.69}\left(\frac{R_1\ V}{P_e\ t_1}\right)^{1/2} \qquad (4)$$

with a graphical representation given on figure 1071-1. If chosen dwell time t_2 is greater than 60 minutes, equation (2) shall be used to determine an R_1 value which will assure a maximum detectable standard leak rate large enough to overlap with the selected gross leak test condition. Alternately, the largest detectable leak rate L as a function of dwell time may be obtained from the approximate solution

$$L\ max = \frac{P_o\ V}{2.69\ t_2}\ \ln\left(\frac{2.69\ L\ P_e}{P_o\ R_1}\right)$$

with graphical representation given on figure 1071-2. In each case (equations (4) and (5)) R_1 shall be taken large compared to the minimum detectable value. 1/

10.2.2 Failure criteria. Unless otherwise specified, devices with an internal cavity volume of 0.01 cm^3 or less shall not be accepted if the equivalent standard leak rate (L) exceeds 5×10^{-8} atm cm^3/s. Devices with an internal cavity volume greater than 0.01 cm^3 and equal to or less than 0.5 cm^3 shall not be accepted if the equivalent standard leak rate (L) exceeds 1×10^{-7} atm cm^3/s. Devices with an internal cavity volume greater than 0.5 cm^3 shall not be accepted if the equivalent standard leak rate (L) exceeds 1×10^{-6} atm cm^3/s.

11. Test condition J, weight gain gross leak.

11.1 Apparatus. Apparatus for this test shall consist of the following:

a. A vacuum/pressure chamber for the evacuation and subsequent pressure bombing of devices up to 90 psi (618 kPa) for up to 10 hours.

b. An analytical balance capable of weighing the devices accurately to 0.1 milligram.

c. A source of type III detector fluid as specified in table 1071-II.

d. A filtration system capable of removing particles greater than one micrometer in size from the fluid.

e. Suitable calibrated instruments to measure test pressures and time.

f. A suitable solvent.

1/ From "Standard Recommended Practices for Determining Hermeticity of Electron Devices with a Helium Mass Spectrometer Leak Detector," ASTM Designation F134, Annual book of ASTM Standards, Pt. 43 November 1980.

11.2 Procedure. The devices shall be cleaned by placing them in a container of a suitable solvent at +25°C and allowed then to soak for two minutes minimum. The devices shall then be removed and placed in an oven at +125°C ±5°C for one hour minimum, after which they shall be allowed to cool to room ambient temperature. Each device shall be weighed and the initial weight recorded or the devices may be categorized into cells as follows: Devices having a volume of ≤ 0.01 cm^3 shall be categorized in cells of 0.5 milligram increments and devices with volumes >0.01 cm^3 shall be categorized in cells of 1.0 milligram increments. The devices shall be placed in a vacuum/pressure chamber and the pressure reduced to 0.0967 psi (667 Pa) and maintained for one hour except that for devices with an internal cavity volume ≥ 0.1 cm^3, this vacuum cycle may be omitted. A sufficient amount of type III detector fluorocarbon fluid shall be admitted to the pressure chamber to cover the devices. When the vacuum cycle is performed, the fluid shall be admitted after the one hour period but before breaking the vacuum. The devices shall then be pressurized to 75 psi (517 kPa) except that 618 kPa (90 psia) shall be used when the vacuum has been omitted. The pressure shall be maintained for two hours minimum. If the devices will not withstand the 75 psi (517 kPa) test pressure, the pressure may be lowered to 45 psi (310 kPa) with the vacuum cycle and pressure maintained for 10 hours minimum. Upon completion of the pressurization period, the pressure shall be released and the devices removed from the pressure chamber and retained in a bath of the fluorocarbon fluid. When the devices are removed from the fluid they shall be air dried for 2 ±1 minutes prior to weighing. The devices shall be transferred singly to the balance and the weight or weight category of each device determined. All devices shall be tested within four minutes following removal from the fluid. The delta weight shall be calculated from the record of the initial weight and the post weight of the device. Devices which were categorized shall be separated into two groups, one of which shall be the devices which shifted one cell or less, and the other devices which shifted more than one cell.

11.3 Failure criteria. A device shall be rejected if it gains 1.0 milligram or more and has an internal volume of ≤ 0.01 cm^3 and 2.0 milligrams or more if the volume is >0.01 cm^3. If the devices are categorized, any device which gains enough weight to cause the device to shift by more than one cell shall be considered a reject. A device which loses weight of an amount which if gained would cause the device to be rejected may be retested after it is baked at +125°C ±5°C for a period of 8 hours minimum.

12. Test condition K, fluorocarbon vapor detection.

12.1 Apparatus. Apparatus for this test shall consist of:

a. A vacuum/pressure chamber for the evacuation and subsequent pressure bombing of devides up to 90 psi (620 kPa) for up to 12 hours.

b. A fluorocarbon vapor detection system capable of detecting vapor quantities equivalent to 0.28 milligram of type I fluid.

c. A source of type I detector fluid specified in table 1071-II.

d. Suitable calibrated instruments to indicate that test, purge times, and temperatures are as specified. The detection system shall be calibrated at least once each shift when production occurs by introducing 1 microliter of type I detector fluid into the test chamber. The resulting reading shall be adjusted in accordance with the manufacturer's instructions.

e. The vapor detector used for condition K shall be calibrated at least once each working shift using a type I fluid calibration source, and following the manufacturer's instructions.

12.2 Procedure. The devices shall be placed in a vacuum/pressure chamber and the pressure reduced to 5 torr or less and maintained for 30 minutes minimum. A sufficient amount of type I detector fluid shall be admitted to the pressure chamber to cover the devices. The fluid shall be admitted after the 30 minute vacuum period but before breaking the vacuum. The devices shall then be pressurized and maintained in accordance with table 1071-III. Upon completion of the pressurization period, the pressure shall be released, the devices removed from the pressure chamber without being removed from the detector fluid for more than 20 seconds and then retained in a bath of fluorocarbon fluid. When the devices are removed from the fluid they shall be air dried for a minimum of 20 seconds and a maximum of 5 minutes prior to the test cycle. If the type I detector fluid has a boiling point of less than +80°C, the maximum drying time shall be 3 minutes. The devices shall then be tested with a fluorocarbon vapor detection system that is calibrated in accordance with 12.1. "Purge" time shall be in accordance with table 1071-VI. Test time shall be a minimum of 3.5 seconds unless the device is rejected earlier. The system's purge and test chambers shall be at a temperature of +125° ±5°C. Test time shall be 2.5 seconds minimum with the purge and test chambers at a temperature of +150°C ±5°C.

NOTE: Test temperature shall be measured at the chamber surface that is in contact with the DUT.

12.3 Failure criteria. A device shall be rejected if the detector instrumentation indicates more than the equivalent of 0.28 milligrams of type I detector fluid in accordance with table 1071-II.

TABLE 1071-VI. Purge time.

Package with internal free volume (cm^3)	Purge time at +125° ±5°C (Seconds)
≤0.01	≤5
≥0.01 ≤0.10	≤9
≥0.1	≤13

NOTE: Purge time shall be defined as the total time the device is heated prior to entering the test mode. Maximum purge time can be determined by cycling a device with a .02 to .05-inch (0.51 to 1.27 mm) hole and measuring the maximum purge time that can be used without permitting the device to escape detection.

13. Summary. The following conditions shall be specified in the applicable detail specification:

a. Test condition letter when a specific test is to be applied (see 3.).

b. Accept or reject leak rate for test conditions G, H_1, or H_2 when other than the accept or reject leak rate specified herein applies (see 10.2.1.1, 10.2.2, and 9.5.1).

c. Where applicable, measurements after test (see 3.).

d. Retest acceptability for test conditions G and H (see 9.). For K, see 3e.

e. Order of performance of fine and gross if other than fine followed by gross (see 3.).

14. Notes.

a. The fine leak test shall be performed first if condition A, B, or E is used for gross leak. Gross leak may be performed prior to fine leak if condition C, D, J, or K is used for gross leak and provided that the vapor pressure of the fluorocarbon material used in condition C, J, and K (which may be inside the device) is greater than 59 psi (406 kPa), T_A = +125°C. The devices shall be subjected to a bake at this temperature for a minimum of one hour prior to performing the fine leak test. This sequence should be true regardless of whether the leak tests are part of a screening sequence or are included as group B or group C requirements.

b. For test conditions A through E and K, the maximum allowable leak rate should not be specified because these tests are "go"/"no-go" type tests that do not provide an indication of actual leak rate. (Although test conditions A, B, and K have a definite quantitative measurement to be met, they are still considered "go"/"no-go" tests.)

c. When retesting devices to test conditions G and H, the history of device exposure to helium and krypton-85, including dates, backfilling performed, tracer gas concentrations, pressure, and time exposed, should be known in order to ensure reliable results.

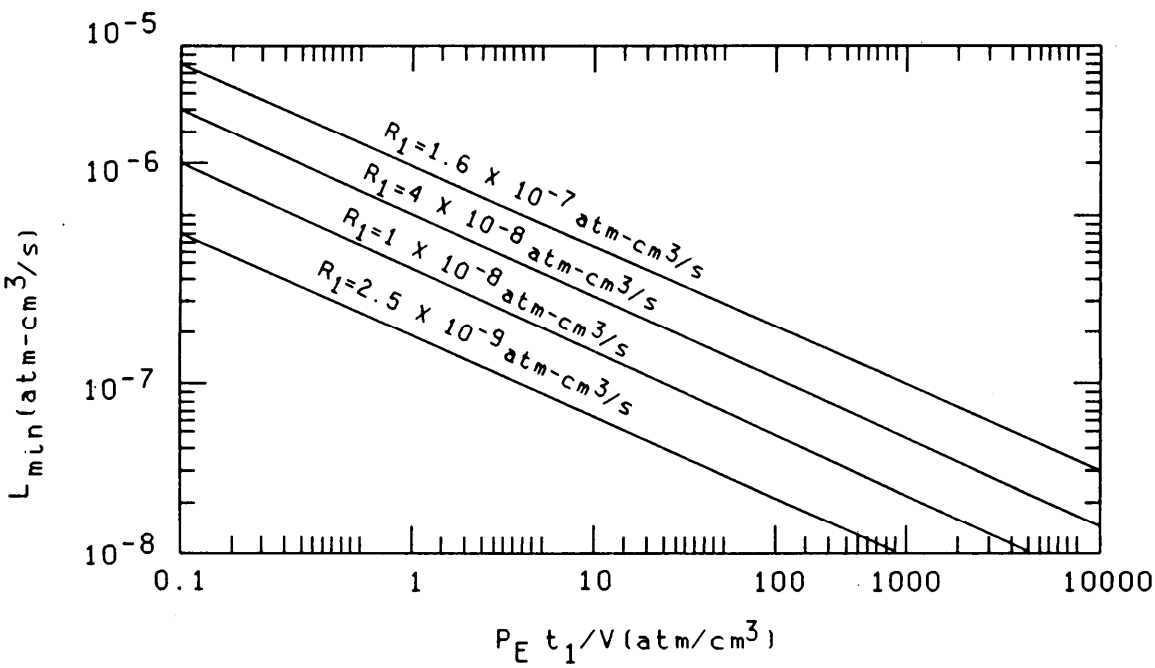

Reject value of equivalent standard leak rate as a function of pressurization conditions and indicated leak rate as computed from the approximate solution, for small leaks where dwell time t_2 is not a significant factor. The reject level R_2 shall be taken larger relative to the minimum detectable R value.

FIGURE 1071-1. Smallest detectable leak.

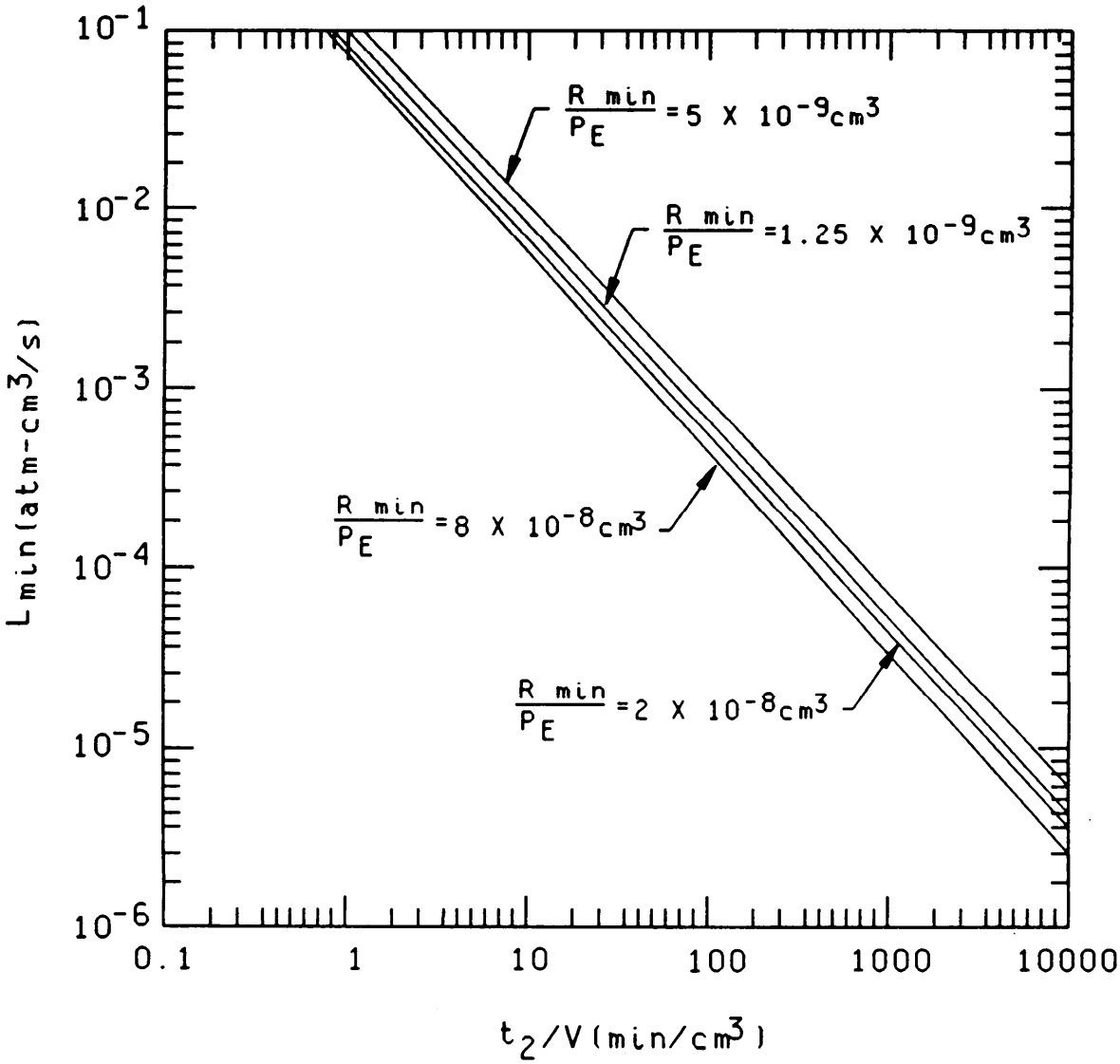

Upper test limit of equivalent standard leak rate as a function of dwell time, pressurization, and indicated leak rate as computed from the approximate solution, (e.g., for larger leaks where internal pressurization is complete).

FIGURE 1071-2. Largest detectable leak.

2000 Series

Mechanical characteristics tests

METHOD 2005.2

AXIAL LEAD TENSILE TEST

1. Purpose. The purpose of this test method is to establish the capability of axial lead glass body diodes to be free of intermittents or opens when measured in the forward mode under conditions of tensile stress and controlled temperature. This test may be destructive.

2. Equipment or apparatus.

a. Digital volt meter and constant current source capable of supplying 100 mA of dc current to the DUT. A battery supply is preferred but if a constant current supply is used, a voltage clamp of approximately five volts shall be used.

b. Load cell with 10 pounds full scale dial (or equivalent) capable of measuring 8 pounds ±10 percent.

c. Pull test fixture capable of clamping both ends of the diode while applying an 8-pound axial pull. One clamp must be electrically isolated allowing the diode forward voltage to be monitored.

d. Hot air supply capable of heating the diode ambient to T_A = +150°C ±5°C. (T_J approximately +175°C.)

3. Procedure. The diode under test shall be mounted in the pull test fixture. The electrical monitoring equipment shall be connected to the diode leads. A forward current of 100 mA is passed through the diode while noting the forward voltage. The ambient temperature of the diode is then increased to ±150°C. NOTE: The diode junction temperature (T_J) will be approximately +25°C higher than ambient (T_J approximately +175°C) due to the thermal resistance of the diode when testing small (computer) diodes at 100 mA dc in the forward direction. A silicon diode (computer type) also has an approximate negative 1.2 mV/°C temperature coefficient at 100 mA. Therefore a 150 mV decline (100 mV minimum) in voltage should be expected during the ambient temperature increase (from +25°C to +150°C). After stabilizing at this temperature, then the axial lead pull force of eight pounds shall be applied while observing the forward voltage change.

4. Criteria for rejection. An acceptable device shall not exhibit a forward voltage increase of more than 30 mV during the 8-pound pull. Any instability or open is cause for rejection.

5. Summary. The following conditions shall be specified in the detailed specification.

a. Ambient test temperature, if other than +150°C ±5°C.

b. Measurement current, if other than 100 mA dc.

c. Axial tensile stress, if other than 8-pounds.

d. Allowable change in forward voltage, if other than 30 mV.

METHOD 2006

CONSTANT ACCELERATION

1. Purpose. The constant acceleration test is used to determine the effect on devices of a centrifugal force. This test is an accelerated test designed to indicate types of structural and mechanical weaknesses not necessarily detected in shock and vibration tests.

2. Apparatus Constant acceleration tests shall be made on an apparatus capable of meeting the minimum requirements of the individual specifications.

3. Procedure. The device shall be restrained by its case, or by normal mountings, and the leads or cables secured. A centrifugal acceleration of the value specified shall then be applied to the device for one minute in each of the orientations X_1, X_2, Y_1, Y_2, Z_1, and Z_2. The acceleration shall be increased gradually, to the value specified, in not less than 20 seconds. The acceleration shall be decreased gradually to zero in not less than 20 seconds.

4. Summary. The following conditions shall be specified in the detail specification:

a. Amount of centrifugal force to be applied, in gravity units (g) (see 3.).

b. Measurements to be made after test.

METHOD 2016.2

SHOCK

1. Purpose. This test is intended to determine the ability of the devices to withstand moderately severe shocks such as would be produced by rough handling, transportation or field operation. Shocks of this type may disturb operating characteristics or cause damage similar to that resulting from excessive vibration, particularly if the shock pulses are repetitive.

2. Apparatus. The shock testing apparatus shall be capable of providing shock pulses of the specified peak acceleration and pulse duration to the body of the device. The acceleration pulse, as determined from the output of a transducer with a natural frequency greater than or equal to five times the frequency of the shock pulse being established, shall be a half-sine waveform with an allowable distortion not greater than ±2O percent of the specified peak acceleration. The pulse duration shall be measured between the points at 10 percent of the peak acceleration during rise time and at 10 percent of the peak acceleration during decay time. Absolute tolerances of the pulse duration shall be the greater of ±0.6 milliseconds (ins) or ±15 percent of the specified duration for specified durations of 2 ms and greater. For specified duration less than 2 ms, absolute tolerances shall be the greater of ±0.1 ms or ±3O percent of the specified duration.

3. Procedure. The shock-testing apparatus shall be mounted on a sturdy laboratory table or equivalent base and leveled before use. The device shall be rigidly mounted or restrained by its case with suitable protection for the leads. The device shall be subjected to the specified number of blows in the specified direction. For each blow, the carriage shall be raised to the height necessary for obtaining the specified acceleration and then allowed to fall. Means may be provided to prevent the carriage. from striking the anvil a second time. Electrical load conditions and measurements to be taken during the shock test, if applicable, shall be as specified. End point measurements shall be as specified.

4. Summary. The following conditions shall be as specified in the detail specification.

a. Acceleration and duration of pulse (see 2.).

b. Number and direction of blows (see 3.).

c. Electrical-load conditions, if applicable (see 3.).

d. Measurements during shock, if applicable (see 3.).

e. End point measurements (see 3.).

METHOD 2017.2

DIE ATTACH INTEGRITY

1. Purpose. The purpose of this test is to establish the integrity of the semiconductor die attachment to the package header or other substrate.

2. Apparatus. The test equipment shall consist of a force-applying instrument with an accuracy of ±5 percent of full scale or 50 grams, whichever is less. A circular dynamometer with a lever arm or a linear motion force-applying instrument may be used to apply the force required for testing. The test equipment shall have the following capabilities:

a. A die contact tool which applies a uniform distribution of the force gradually to an edge of the die (see figure 2017-1).

b. Provisions to assure that the face of the die contact tool is perpendicular to the die mounting plane of the header or substrate.

c. A rotational capability, relative to the header/substrate holding fixture and the die contact tool, to facilitate line contact parallel to the edge of the die; the tool applying the force to the die shall contact the die edge from end-to-end (see figure 2017-2).

d. A binocular microscope with a minimum magnification of 10X and sufficient lighting for visual inspection of the die and die contact tool interface during testing.

e. Optional apparatus for devices with a die area less than 25.5×10^{-4} in^2 instead of a calibrated instrument. Any hand held tool may be used. The general requirements of 2a., 2.b., and 2.d. above shall apply. The tool which shall apply a uniform perpendicular force to the edge of the die (see figures 2017-1, 2017-2, and 2017-3) and a microscope with a minimum magnification of 10X shall be used.

f. Apparatus for test condition C: A hammer, chisel, or spring loaded punch are suitable.

3. Test condition A die shear. For die directly bonded to a header or substrate.

3.1 Procedure. The test shall be conducted as defined herein or to the test conditions specified in the applicable detail specification consistent with the particular part construction. All die strength tests shall be counted and the specific sampling, acceptance, and added sample provisions shall be observed, as applicable. (This test shall be considered destructive.)

3.1.1 Shear strength. A force sufficient to shear the die from its mounting or equal to twice the minimum specified shear strength (see figure 2017-4), whichever occurs first, shall be applied to the die using the apparatus of 2 above.

a. When a linear motion force-applying instrument is used, the direction of the applied force shall be parallel with the plane of the header or substrate and perpendicular to the edge of the die being tested.

b. When a circular dynamometer with a lever arm is employed to apply the force required for testing, it shall be pivoted about the lever arm axis and the motion shall be parallel with the plane of the header or substrate and perpendicular to the edge of the die being tested. The contact tool attached to the lever arm shall be at a proper distance to assure an accurate value of applied force.

c. The die contact tool shall apply a force gradually from zero to a specified value against an edge of the die which most closely approximates a 90° angle with the base of the header or substrate to which it is bonded (see figure 2017-3). For rectangular die, the force shall be applied perpendicular to the longer side of the die. When constrained by package configurations, any available side of the die may be tested if the above options are not available.

d. After initial contact with the die edge and during the application of force the relative position of the contact tool shall not move vertically such that contact is made with the header/substrate or die attach material. If the tool rides over the die, a new die may be substituted or the die may be repositioned, provided that the requirements of 3.1.3 are met.

3.1.2 Criteria for device acceptability.

3.1.2.1 Failure criteria. A device will be considered a failure if the die bond shears as follows:

a. With a force less than the minimum shear strength requirements specified on figure 2017-4 (1.0 X line).

b. With a force less than 1.25 times (1.25 X line) the minimum shear strength requirements (1.0 X line) specified on figure 2017-4 and evidence of adhesion, of the die attach material, less than 50 percent of the die attach area.

c. With a force less than 1.5 times (1.5 X line) the minimum shear strength requirements (1.0 X line) specified on figure 2017-4 and evidence of adhesion, of the die attach material, less than 25 percent of the die attach area.

d. With a force less than 2.0 times (2.0 X line) the minimum shear strength requirements (1.0 X line) specified on figure 2017-4 and evidence of less than 10 percent adhesion of the die attach material.

3.1.2.2 Acceptance criteria. A device will be considered acceptable if the die bond:

a. Does not shear with a force equal to or greater than 2.0 times (2.0 X line) the minimum shear strength requirements (1.0 X line) specified on figure 2017-4.

b. Shears with evidence of remaining semiconductor material equal to or greater than 50 percent of the die attach area regardless of the shearing force applied. (This criteria applicable only for devices with die area less than 25.5 X 10^{-4} in^2 (1.645 inn^2)).

NOTE: Residual semiconductor material attached in discrete areas of the die attach medium shall be considered as evidence of such adhesion.

3.1.2.3 Separation categories. When specified, the force required to achieve separation and the category of the separation shall be defined as:

a. Shearing of the die with residual silicon remaining.

b. Separation of die from die attach material.

c. Separation of die and die attach material from package.

3.1.3 Summary. The following details shall be specified in the individual specification.

a. The minimum die attach strength if other that shown on figure 2017-4.

b. Test condition letter.

c. Sample size and accept number.

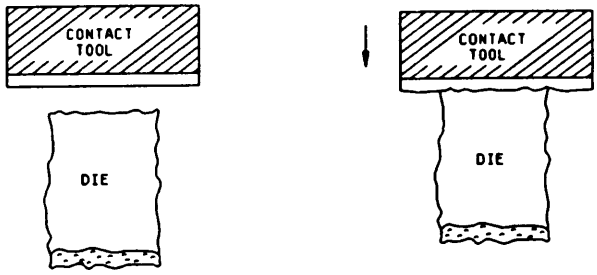

FIGURE 2017-1. Uniform force distribution.

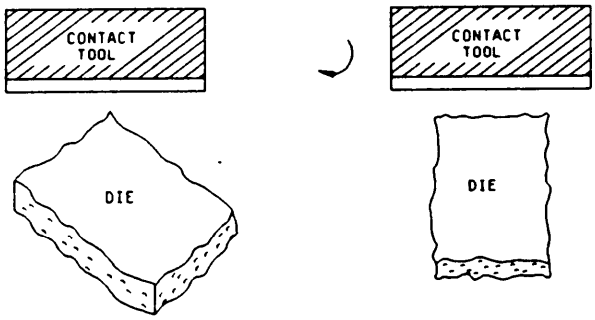

FIGURE 2017-2. Rotational capability.

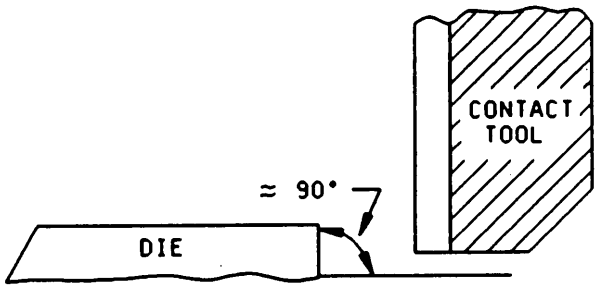

FIGURE 2017-3. Perpendicular force application.

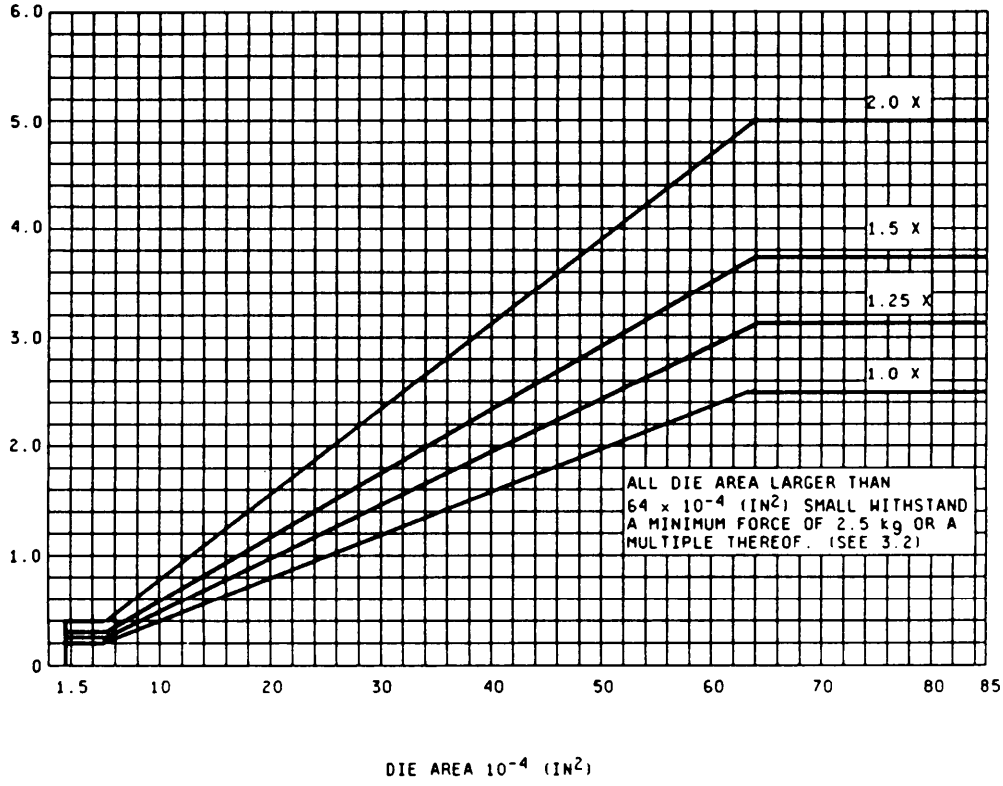

FIGURE 2017-4. Die shear strength criteria (minimum force versus die attach area).

4. Test condition B, mechanical impact. Test condition B may be used or devices which have a metallurgical bond between a header or contact plate and the silicon die on only one side of the die and is to be used for those devices with a contact plate bonded to both sides of the die or to one side of the die with the other side bonded to a header. This method shall not be used for die with area less than .25 square inch.

5. Procedure. The die assemblies are placed on a suitable anvil. For die with a contact plate or header on only one side, the die is struck with a ball peen hammer such that the silicon is shattered. The silicon will not be adhered to those areas of the bond where solder, braze, or alloy voids exist and the voids will thus be visible. The contact plate or header can now be visually examined to determine the size and density of any voids. The size and density of the voids are compared to the established visual standards for acceptable die attachment. For die with both sides die attached (a contact plate on both sides or a header on one side and contact plate on the other) the die can be struck with a hammer on one contact plate or cleaved by striking with a chisel on the edge. If cleaved with a chisel, each side should be struck with a hammer to break free any voided silicon. Visual comparison to the standards is then done as above.

5.1 Precautions. The following precautions shall be observed during test:

a. Use of a chisel or hammer can result in flying debris. Eye protection and protective clothing must be worn.

b. Breaking of the silicon can result in the exposure of sharp edges. Care in handling must be taken to avoid injury.

5.2 Failure criteria. A device will be considered a failure:

a. Any single void that has an area greater than 3 percent of the total die area.

b. The sum total of all void areas exceeds 6 percent of the total die area.

6. Summary. The following details shall be specified in the individual specification.

a. A test condition letter.

b. Sample size per batch or run.

METHOD 2026.10

SOLDERABILITY

1. Purpose. The purpose of this test method is to determine the solderability of all terminations which are normally joined by a soldering operation. This determination is made on the basis of the ability of these terminations to be wetted by a coating of solder, and to predict a suitable fillet when soldered. These procedures will verify that the treatment used in the manufacturing process to facilitate soldering is satisfactory and that solder has been applied to the required portion of the part which is designed to accommodate a solder connection. An accelerated aging test is included in this test method which simulates natural aging under a combination of various storage conditions that have different deleterious effects.

1.1 Terms and definitions. The definition of terms shall be in accordance with the following:

1.1.1 Solderability. The property of a metal to be wetted by solder.

1.1.2 Wetting. The formulation of a relatively uniform, smooth, and unbroken film of solder, adherent to a base material.

1.1.3 Porosity. A condition of a solder coating with a spongy appearing, uneven surface which contains a concentration of small pinholes and pits. See figure 2026-3.

1.1.4 Non-wetting. A condition whereby a surface has contacted molten solder, but the solder has not adhered to all of the surface, and the surface tested remains exposed. See figure 2026-4.

1.1.5 Pinholes and voids. Small holes occurring as imperfections which penetrate entirely through the solder layer. See figures 2026-1, 2026-2, and 2026-5.

1.1.6 Dewetting. A condition which results when molten solder has coated a surface and then receded leaving irregularly shaped mounds of solder separated by areas covered with a thin solder film, and where the base metal is not exposed. See figure 2026-6.

1.1.7 Foreign material. Particles of material located on, but different from the lead material or coating. See figure 2026-7.

1.1.8 Solder and flux minimum application depth:

1.1.8.1 Dual-in-line Packages. The location at which the termination widens to its maximum shoulder dimension, or to the package base plane, whichever is the furthest point from the seal.

1.1.8.2 Radial lead packages (e.g.. flat package, top brazed quads). A location on the lead, no greater than 0.05 inch from the package.

1.1.8.3 Axial lead packages (e.g., TO cans. PGA). A location on the lead that is no greater than 0.05 inch from the body of the package, the seating plane, or the standoff, whichever is the furthest from the glass seal.

1.1.8.4 Leaded chip carrier (e.g., J bend. gull wing). A location on the leads equal to an extension of the base plane onto the leads, or the point at which the lead widens.

1.1.8.5 Leadless chip carriers. The location which is 50 percent of the distance between the top of the castellation and the terminal pad.

1.1.8.6 Thread mounted devices with crimped (flattered) hole punched terminals. The flat portion or .050 inches below the bottom of the terminal hole toward the device body, which is smaller.

2. Apparatus.

2.1 Solder pot. A static solder pot of sufficient size to contain at least 2 pounds of solder shall be used. The apparatus shall be capable of maintaining the solder at the temperature specified in 4.4. (NOTE: A wave or flow pot may be used provided it is modified to provide a totally "static" condition at the time of immersion).

2.2 Dipping mechanism. A dipping mechanism capable of controlling the rates of immersion and emersion of the terminations and providing a dwell time (total time at the required depth) in the solder bath as specified in 4.4 shall be used. The sample holder shall not come in contact with the solder bath.

2.3 Optical equipment. A binocular optical system capable of providing a minimum magnification of 10X, +10X -OX shall be used.

2.3.1 Lighting equipment. A lighting system shall be used that will provide a uniform nonglare, nondirectional illumination of the specimen.

2.4 Steam aging equipment. A noncorrodible container and cover of sufficient size to allow the placement of specimens inside the vessel shall be used. The specimens shall be placed such that the lowest portion of the specimen shall be 1.5 inch (38.10 mm) minimum to 2 inch (50.80 mm) maximum above the surface of the boiling water (see 3.3). A suitable method of supporting the specimens shall be improvised using noncontaminating material. The apparatus shall be capable of having the specified temperature verified as required by 4.2.

2.4.1 Cleaning of the system. The apparatus shall be drained and cleaned at least once per month or prior to use. More frequent cleaning may be necessary. No contaminating solvents shall be used.

2.5 Solder iron. A conduction temperature controlled solder iron of appropriate thermal capacity adequate to allow solder connection to be made solidly and maintain proper solder temperature throughout the solder operation.

3. Materials.

3.1 Flux. The flux shall conform to type "R" of MIL-F-14256 (25 percent nominal solids, as provided for by IPC, by weight), flux, soldering, liquid (rosin base). The customer or user may, at their option, use "RMA" flux. flux with 25 percent nominal solids is recommended.

3.2 Solder. The solder shall conform to type "S", composition Sn60 or Sn63, of QQ-S-571, solder, tin alloy, tin-lead alloy, and lead alloy.

3.3 Water. The water to be used for steam aging shall be either distilled or de-ionized.

WARNING: These materials may involve substances that are flammable, toxic to eyes, skin, respiratory tract, or present a serious burn potential. Eye and skin protection should be used. Heat resistance gloves should be used when handling hot objects.

3.4 Standard copper wrapping wire. The standard wrapping wire specified in 4.4.3 shall be fabricated from type S, soft or drawn and annealed, uncoated in accordance with QQ-W-343, Wire, Electrical and Nonelectrical, Copper (Uninsulated). The diameter of the wrapping wire shall be .025 ±.005 inch. The preparation of the wrapping wire shall be as follow:

a. Straighten and cut wire into convenient lengths (2 inches (50.80 mm) minimum).

b. Degrease and clean as necessary to ensure wire surface is free of contaminants.

c. Immersion in flux (MIL-F-14256, type RMA).

d. Dip in molten solder for 5 seconds at +245°C ±5°C (+473°F ±9°F).

e. To remove or dissolve the residual type RMA flux, wash or rinse in isopropyl alcohol.

f. Standard wrapping wire shall be stored in a clean, covered container if not used immediately.

NOTE: All chemicals shall be of commercial grade or better. Fresh solvents shall be used as often as is necessary to preclude contamination.

WARNING: The above steps may involve substances that are flammable, toxic to eyes, skin, and respiratory tract, or present a serious burn potential. Eye and skin protection are required, including heat resistant gloves when handing hot objects.

4. Procedure. The test procedure shall be performed on the number of terminations specified in the individual specification. The test may be performed just prior to packaging for storage or shipment, immediately upon removal from the manufacturers' protective packaging or as a qualification or QCI test. The sample shall be selected at random. During handling, special care shall be exercised to prevent the surfaces being tested from being abraded or contaminated by grease, perspiration, or abnormal atmospheres. The test procedure shall consist of the following operations:

a. Proper preparation of the specimens (see 4.1), if applicable.

b. Aging of all specimens (see 4.2).

c. Application of flux and solder (see 4.3 and 4.4).

d. Examination and evaluation of the tested portions of the terminations upon completion of the solder process (see 4.5).

4.1 Preparation of terminations.

4.1.1 Sample preparation. No wiping, cleaning, scraping, or abrasive cleaning of the terminations shall be performed prior to testing. Any special preparation of the terminations, such as bending or reorientation prior to the test, shall be specified in the individual specification.

4.2 Steam aging. Prior to the application of the flux and subsequent solder dips, all specimens assigned to this test shall be subjected to aging by exposure of the surfaces to be tested to water vapor in the apparatus specified in 2.4. The water vapor temperature at the component lead level shall be in accordance with table 2026-I for an uninterrupted 8 ±0.5 hours. Aging may be interrupted once for 10 minutes maximum. The devices shall be removed from the test apparatus upon completion of the specified test period.

TABLE 2026-I. Altitude versus steam temperature.

Altitude (feet)	Steam temperature (0 +3 -5°C)
0 - 2,000	91
2,001 - 4,000	89
4,001 - 6,000	87
Greater than 6,000	85

4.2.1 Drying and storage procedures. Upon removing the test specimens from the apparatus, the parts may be dried using one of the following procedures:

a. Air dry on a noncontaminating surface.

b. Bake at +100°C maximum for no more than 1 hour in a dry atmosphere (dry nitrogen atmosphere is recommended.)

c. Air dry at ambient temperature.

NOTE: Parts not solderability tested within 2 hours after removal from the aging apparatus shall be stored in a desiccant jar or dry nitrogen cabinet up to 72 hours before testing. The parts shall not be used for testing if they exceed the storage requirements.

4.3 Solder dip terminations.

4.3.1 Application of the flux. The terminations to be tested shall be immersed in flux maintained at room ambient temperature. Unless otherwise specified in the individual specification, the terminations shall be immersed according to 1.1.8. The terminations to be tested shall be immersed in the flux for 5 to 10 seconds, and shall be allowed to drain for 5 to 20 seconds prior to dipping in the solder pot. The flux shall be covered when not in use and discarded after 8 hours or maintained to specific gravity between 0.838 and 0.858 at +25°C and discarded after one week of use.

4.3.2 Solder dip procedure. The dross and burned flux shall be skimmed from the surface of the molten solder prior to testing. The molten solder shall be at a uniform temperature of +245°C ±5°C (+473°F ±9°F). (Stirring and skimming may not be required in wave or flow pots.) The part shall be attached to a dipping device (see 2.2) and the flux covered terminations immersed once (except for the possible duplicate immersion of corner terminations on leadless packages) in the molten solder to the depth specified in 1.1.8. There shall be 7.0 seconds maximum dwell time of the test specimens above the pot prior to immersion. The immersion and emersion rates shall be 1.0 ±.25 inch (25.4 ±6.35 mm) per second. The dwell time in the solder shall be 5 ±.5 seconds. The dwell time for terminations greater than or equal to 0.040 inch (1.02 mm) in diameter shall be 7 ±0.5 seconds. After the dipping process, the part shall be allowed to cool in air. Residue flux shall be removed from the terminations by dipping the parts in isopropyl alcohol or other suitable solvent. If necessary, a clean soft cloth, cotton swab, or similar appliance moistened with clean isopropyl alcohol or other suitable solvent, may be used to remove all remaining flux.

4.3.2.1 Solder dipping of gold plated terminations. Gold plated terminations may be immersed twice using one or two solder pots. The first immersion is to scavenge the gold on the terminations. In the case of using a static pot, the solder shall be stirred in between the first and second immersion. It is recommended that a separate solder pot be used for gold plated devices.

4.3.2.2 Solder dipping diodes. During immersion, care shall be taken to prevent extreme thermal gradients along the device axis. Fixtures shall neither heat sink the diode body nor hold the unimmersed lead closer than 0.5 inch from the body.

4.4 Wire wrap terminations. Terminations not designed for solder dip application (i.e., turrets, lugs, posts, and other terminal configurations generally having specific wire attachment areas such as hole, notch, or slot).

4.4.1 Application of standard wire wrap. Prior to application of flux and subsequent solder, the wire attach area of the termination shall be wrapped 1 to 1.5 turns using the standard wrapping wire specified in 3.4. The wire shall be wrapped such that it will not move during soldering.

4.4.2 Application of flux. Flux shall be applied to both the wire wrapping and the attach area of the termination using any suitable method such as brushing. Excess flux may be drained from the termination prior to soldering.

4.4.3 Solder iron procedure. The termination and wrapping wire shall be soldered using the solder specified in 3.2 and the soldering iron specified in 2.5. Heat shall be applied to the connection until the solder has been molten for 5 seconds minimum to 10 seconds maximum. After soldering, the part shall be allowed to air cool. Residue flux shall be removed from the termination by dipping the part in isopropyl alcohol. If necessary, a clean soft cloth, cotton swab, or similar appliance moistened with clean isopropyl alcohol may be used to remove any remaining flux. Wire wrap terminations may utilize solder application methods referenced in 4.3.2 or 4.4.3.

4.5 Examination of terminations. The dipped portion of the terminations shall be examined using a binocular magnification of 10-20X in accordance with 2.3.

4.5.1 Evaluation of solder dip terminations. The criteria for acceptable solderability are:

a. The dipped portion of the terminations is at least 95 percent covered by a continuous new solder coating.

b. Pinholes, voids, porosity, nonwetting, or dewetting that do not exceed 5 percent of the total area and any single defect area that does not exceed 3 percent of the total test area.

c. The customer or user of the component may establish a critical portion of the termination within the dipped area. The customer or user has the option to accept solderability defects outside their established critical area.

d. There shall be no solder bridging between any termination area and any other metallization not connected to it by design. In the event that the solder dipping causes bridging, the test shall not be considered a failure provided that a local application of heat (i.e., gas, soldering iron, or redipping) results in solder pullback and no wetting of the dielectric area as indicated by microscopic examination. The area of the surface to be tested shall be as specified in 1.1.8.

e. For leaded devices only, the cut portions of the lead which expose lead ends shall not be used for examination and evaluation of the solder coverage of the termination.

f. For acceptable and nonacceptable criteria, see figures 2026-1 through 2026-7.

g. Sample exhibiting corrosion and marking degradation shall not be considered solderability failures. Methods 1041 and 1022 shall be used to determine compliance for corrosion and marking failure modes.

NOTE: The area of the surface to be tested as specified in 4.5 shall be examined. If all views of the tested surface shows less than 95 percent coverage, the device shall be considered as a failure. In the case of a dispute, the percentage of coverage with pinholes or voids shall be determined by the actual measurement of those areas, as compared to the total areas.

4.5.2 Evaluation of wire wrap terminations. The criteria for acceptable solderability are:

a. Ninety-five percent of the total length of the fillet, between the standard wire wrap and the termination, is tangent to the surface of the termination being tested and free from pinholes, voids, porosity, nonwetting or dewetting.

b. A nonuniform flow line where the solder fillet joins with the surface of the termination may occur from the method of solder application and is acceptable providing wetting is as specified in a. above.

4.6 Evaluation of devices. After solderability testing, the device shall be inspected in accordance with method 2071 and shall comply with the criteria regarding part mark, legibility, corrosion contamination, finish, and foreign material. This requirement is only for devices that will be shipped against the purchase order as production units and not a criteria for solderability end points.

5. Summary. Unless otherwise noted, the following details are to be specified in the individual specifications:

a. The number of terminations of each part to be tested (see 4.).

b. Special preparations of the terminations, if applicable (see 4.1).

c. Depth of immersion, if applicable and if other than 1.1.8.

d. Magnification, if other than specified in 2.3.

e. Solder composition, flux, and temperature if other than those specified in this document.

f. Number of cycles, if other than one or as noted in this document. Where more than one cycle is specified to test the resistance of the device to heat as encountered in multiple solderings, the examinations and measurements required shall be made at the end of the first cycle and again at the end of the total number of cycles applied. Failure of the device on any examination and measurement at either the one-cycle or the end-point shall constitute a failure to meet this requirement.

How to use this chart.

1. The chart is set-up for 0.5 inch (12.70 mm) long leads.
2. View the entire circumference of the lead.
3. Locate the lead diameter on the left side of the chart.
4. Locate the diameter of the void on the top of the chart.

(Inches)

Void size / Lead diameter	0.001	0.003	0.005	0.010	0.015	0.020	0.030	0.040
0.010	1000	111	40	10	4.4	2.5	1.10	0.62
0.015	1500	167	60	15	6.6	3.75	1.60	0.937
0.020	2000	222	80	20	8.8	5	2.22	1.25
0.030	3000	333	120	30	13.0	7.5	3.33	1.87
0.040	4000	444	160	40	17.7	10	4.44	2.50
0.050	5000	555	200	50	22.0	12.5	5.55	3.12
0.060	6000	666	240	60	26.6	15	6.66	3.75

Example for less than 0.5 inch (12.70 mm) leads.

A. Lead length = 0.350.
B. 0.350/0.500 = 0.700.
C. To determine the number of acceptable voids, multiply the number of voids on the chart by 0.700.
D. For A 0.001-inch (.03 mm) void on A 0.010-inch (.25 mm) diameter lead = 700 voids.
E. For leads greater than 1.0 inch (25.4 mm) in length (see 4.5).

FIGURE 2026-1. Solderability evaluation guidelines.

Solderability coverage of a .5 inch (12.70 mm), .025 inch (0.64 mm) diameter lead of 10X magnification

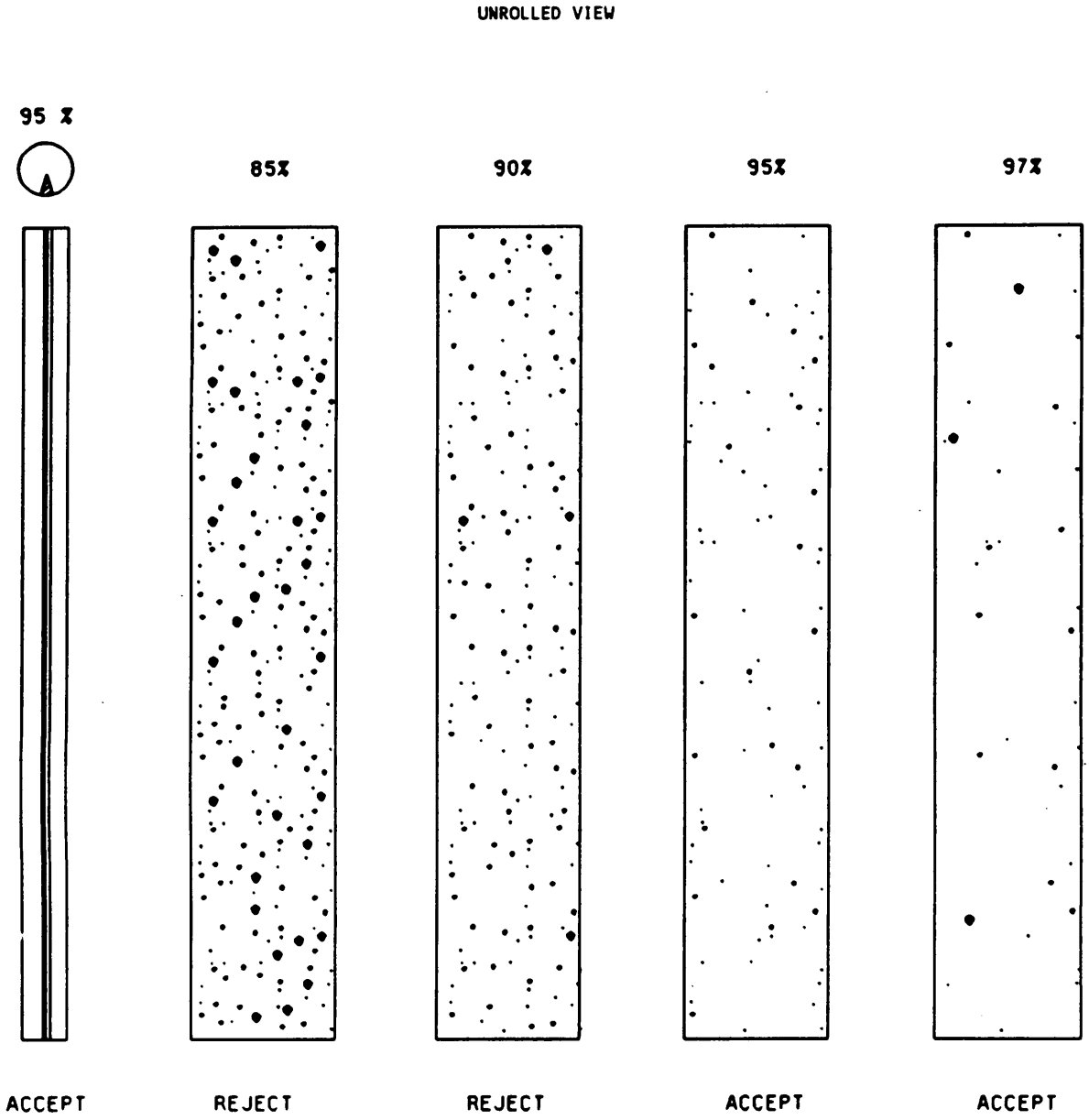

FIGURE 2026-2. Solderability coverage.

FIGURE 2026-3. Porosity

FIGURE 2026-4. Nonwetting.

FIGURE 2026-5. Pinholes.

FIGURE 2026-6. Dewetting.

FIGURE 2026-7. Foreign material.

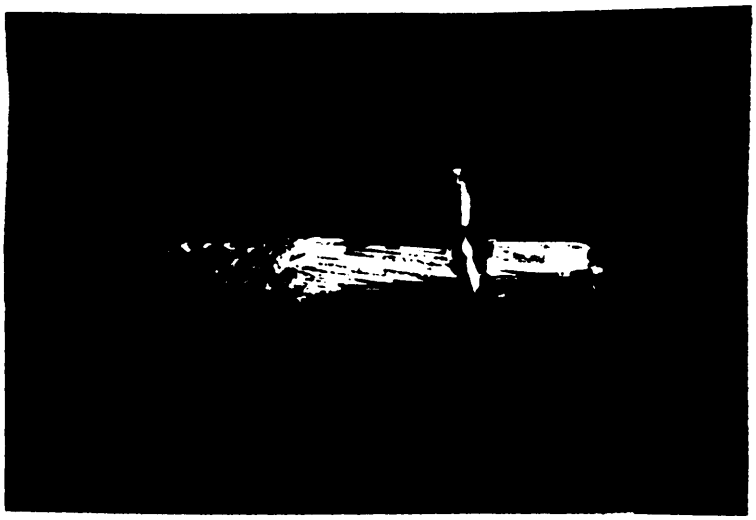

FIGURE 2026-8. Illustration of acceptable terminal.

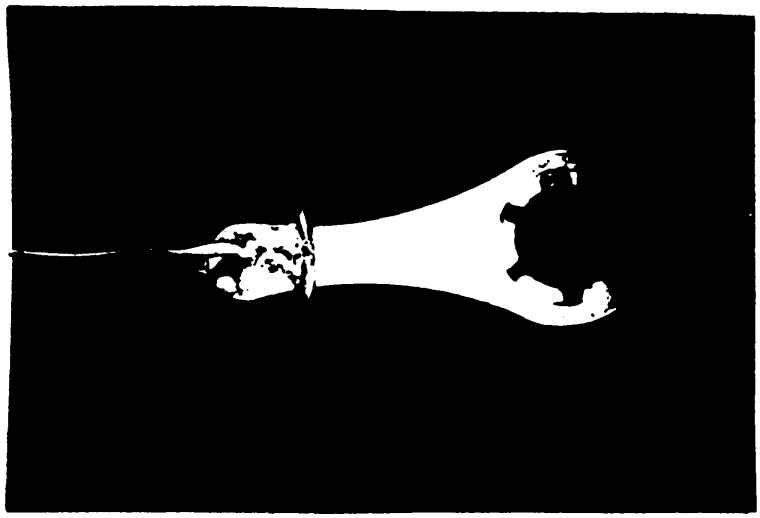

FIGURE 2026-9. Illustration of unsolderable terminal.

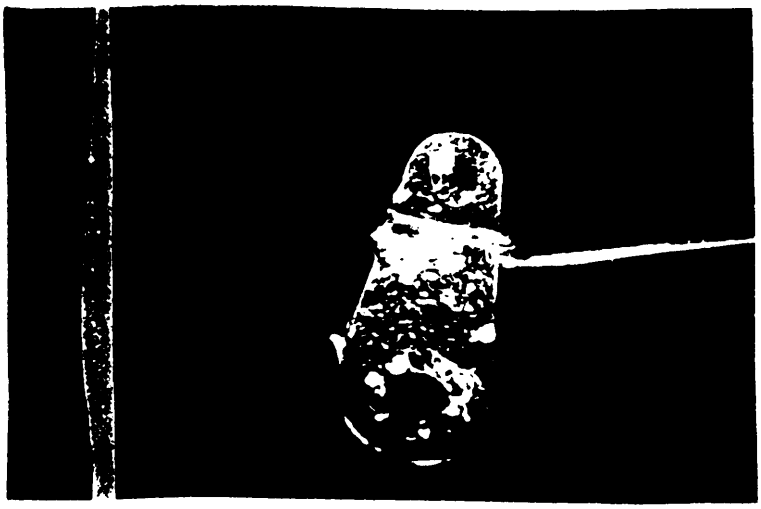

FIGURE 2026-10. Illustration of acceptable solderable stranded wire.

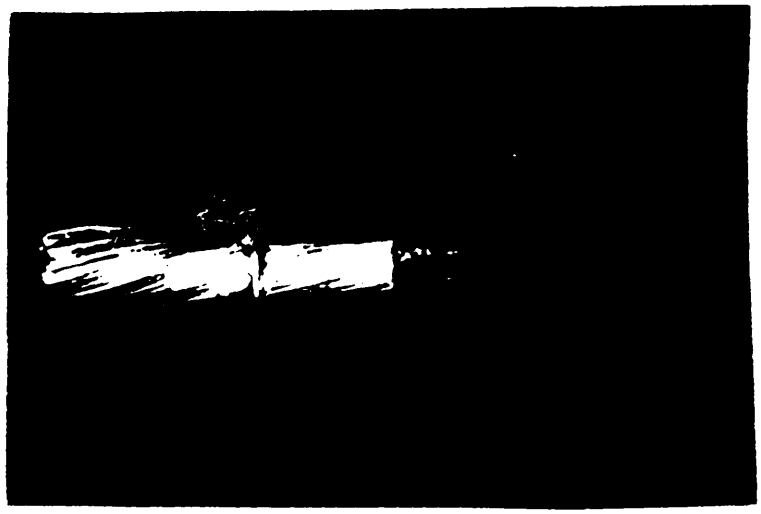

FIGURE 2026-11. Illustration of partially solderable strand wire showing incomplete fillet.

METHOD 2031.2

SOLDERING HEAT

1. Purpose. This test is to determine the device resistance to the high temperature encountered during soldering.

2. Apparatus. Apparatus used for the soldering heat test shall include temperature controlled solder pot.

3. Procedure. The leads of the device shall be immersed for 10 +2, -O seconds in molten metal, without flux, at a temperature of +260°C ±5°C, to a point .062 ±.031 inch (1.57 ±.79 mm) from the body, tabulation or stub of the device. One immersion for each of the device leads constitutes one cycle. The number of cycles shall be as specified. All leads may be immersed simultaneously at the discretion of the manufacturer. The devices shall be allowed to return to ambient temperature between cycles. During immersion, care shall be taken to prevent extreme thermal gradients along the device axis; fixtures shall neither heat sink the diode body nor hold the unimmersed lead closer than .5 inch (12.70 mm) from the body.

4. Summary. The following conditions shall be specified in the detail specification:

a. Number of cycles (see 3.).

b. Measurements after test.

METHOD 2036.4

TERMINAL STRENGTH

TEST CONDITION A, TENSION

1. Purpose. This test is designed to check the capabilities of the device leads, welds and seals to withstand a straight pull.

2. Apparatus The tension test requires suitable clamps, vise, and hand vise for securing the device and for securing the specified weight to the device lead without lead restriction.

3. Procedure. The specified weight shall be applied, without shock, to each lead or terminal. The case of the device shall be held in a fixed position. When testing axial lead devices, the device shall be supported, with the leads in a vertical position, by securing one lead to a clamp or vise. With a hand vise or equivalent, the specified weight, including the attaching device, shall be fastened to the lower lead for the time specified. Each lead shall be fastened as close to its and as practicable. When examined using 10X magnification after removal of the stress, any evidence of breakage (other than meniscus), loosening, or relative motion between the terminal lead and the-device body shall be considered a device failure.

4. Summary. The following details shall be specified in the individual specification:

a. Weight to be attached to lead (see 3).

b. Length of time weight is to be attached (see 3).

c. Measurements to be made after this test.

TEST CONDITION D1, LEAD OR TERMINAL TORQUE

1. Purpose. This test is designed to check device leads and seals for their resistance to twisting motions.

2. Apparatus. The torque test requires suitable clamps and fixtures and a torsion wrench or other suitable method of applying the specified torque without lead restriction.

3. Procedure. The body of the device shall be securely clamped, with a suitable fixture, and the specified torque shall be applied to the portion of the terminal nearest the seal for the specified time. The specified torque shall be applied, without shock, about the device axis. The torque shall be applied between the lead or terminal and the case in a direction with tends to cause loosening of the lead or terminal.

3.1 UHF and microwave diodes. Unless otherwise specified, a torque of 1.5 pound-inches (.17 newton-meter) about the diode axis shall be applied for the specified time, without shock, between the terminals, and in a direction which tends to cause loosening of the terminals. The manufacturer's recommendation shall be allowed in the method clamping.

3.2 Examination under magnification. When examined using 10X magnification after removal of the stress, any evidence of breakage (other than meniscus), loosening, or relative motion between the terminal lead and the device body shall be considered a device failure.

4. Summary. The following conditions shall be specified in the detail specification:

a. The amount of torque to be applied (see 3.1).

b. Length of time torque is to be applied (see 3.1).

c. Measurements to be made after test.

TEST CONDITION D2, STUD TORQUE

1. Purpose. This test is designed to check the resistance of the device with threaded mounting stud to the stress caused by tightening the device when mounting.

2. Apparatus. The torque test requires suitable clamps and fixtures and a torsion wrench or suitable method of applying the specified torque.

3. Procedure. The device shall be clamped by its body or flange. A flat steel washer of a thickness equal to 6-thread pitches of the stud being tested and a class 2 fit steel nut shall be assembled in that order on the stud, with all parts clean and dry. The specified torque shall be applied for the specified length of time without shock to the nut. The nut and washer shall then be disassembled from the device, and the device then examined for compliance with the requirements.

3.1 Failure. The device shall be considered a failure if:

a. The stud breaks.

b. The stud exhibits elongation greater than one-half of one-thread pitch.

c. The device exhibits obvious visual mechanical deformations, such as:

(1) Stripping of threads,

(2) Deformation of mounting seat, and

(3) Bending of stud.

d. It fails the specified post-test and point measurements.

4. Summary. The following conditions shall be specified in the detail specification:

a. The amount of torque to be applied (see 3).

b. Length of time torque is to be applied (see 3).

c. Measurements to be made after test.

TEST CONDITION E, LEAD FATIGUE

1. Purpose. This test is to check the resistance of the device leads to metal fatigue.

2. Apparatus. The lead-fatigue test shall be made using the specified weight and with suitable clamping or attaching devices.

3. Procedure. Where applicable, two leads on each device shall be tested. The leads shall be selected in a cyclical manner (regular recurring), when applicable; that is, leads number 1 and 2 on the first device, number 2 and 3 on the second device. Unless otherwise specified, a weight of 8 ±0.5 ounces (225 ±15 grams) shall be applied to each lead for three 90 ±5 degrees arcs of the case. An arc is defined as the movement of the case, without torsion, to a position perpendicular to the pull axis and return to normal. All arcs on a single lead shall be made in the same direction and in the same plane without lead restriction. One bending cycle shall be completed in from 2 to 5 seconds. Any glass fracture (other than meniscus) or broken lead shall be considered a failure.

4. Summary. The following conditions shall be specified in the detail specification:

a. Weight to be attached to the lead, if other than 8 ±0.5 ounces (225 ±15 grams) (see 3.).

b. Number of arcs, if other than three (see 3.).

c. Measurements to be made after this test.

TEST CONDITION F, BENDING STRESS

1. Purpose. This test is made to check the quality of the leads, lead welds, and glass-to-metal seals of the devices.

2. Apparatus. Bending-stress tests shall be made using attaching devices, such as suitable clamps or other supports for stud-mounted devices.

3. Procedure.

3.1 Method A (for cylindrical devices). With one contact of the device held in a suitable clamp, the specified force shall be applied, without shock, at right angles to the reference axis of the device, as near the top of the opposite contact or tabulation as practicable.

3.2 Method B (for stud-mounted devices). The device shall be securely fastened, with its reference axis in a horizontal position, by screwing the stud into a suitable support. With a hand vise, or equivalent, the specified weight shall be suspended from the hold in the lug for the length of time specified.

3.3 Failure criteria. When examined using 10x magnification after removal of the stress, any evidence of breakage (other than meniscus), loosening, or relative motion between the terminal lead and the device body shall be considered a failure.

4. Summary. The following conditions shall be specified in the detail specification.

a. Special preparations or conditions, if required.

b. Weight to be attached to lead (see 3.).

c. Test method (see 3.1 and 3.2).

d. Length of time weight is applied.

e. Measurements to be made after test.

METHOD 2037

BOND STRENGTH

1. Purpose. The purpose of this test is to measure bond strengths to determine compliance with specified requirements of the applicable detail specification. This test may be applied to wire-to-die or clip-to-die bond, wire-to-package lead bond, or the wire-to-substrate bond inside the package of wire or clip connected discrete devices bonded by soldering, thermocompression, ultrasonic or related techniques.

2. Apparatus. The apparatus for this test shall consist of suitable equipment for applying the specified force required to cause bond failure. A measurement of the applied stress in grams force (gf) at the point of failure shall be provided by equipment capable of measuring stresses up to and including 10 gf with an accuracy of ±0.25 gf, stresses between 10 and 50 gf with an accuracy of ±0.5 gf, and stresses exceeding 50 gf with an accuracy of 5 percent of indicated value.

3. Procedure. The test shall be conducted using the test conditions specified. All bond pulls shall be counted and the specified sampling, acceptance and added sample provisions shall be observed, as applicable. Unless otherwise specified, the sample plan specified for the bond strength test shall determine the minimum sample size in terms of the minimum number of pulls to be accomplished rather than the number of complete devices in the sample (e.g., wires for test condition A, bonds for test condition B, and clips for test condition C). Where there is any adhesive, encapsulant, or other material used on the die to increase the apparent bond strength, the bond strength test shall be performed prior to application or, for post seal tests, the material shall be removed. Unless nondestructive limits are specified, all bond pulls shall be to destruction.

3.1 Test conditions.

3.1.1 Test condition A: Wire pull, double bond. This test is normally employed for internal bonds at the die or substrate and the lead posts of discrete devices. Under this condition, both bonds are tested simultaneously by inserting a hook under the lead wire and, with the device clamped, applying the pulling force at mid-point of the wire span. The force shall be applied in the upward direction tending to cause a lift-off separation of the bond from the die and within 5° of perpendicular to: (1) the plane of the die or substrate or, (2) to a straight line between the two bonds. When a failure occurs, the force causing the failure and the failure category shall be recorded.

3.1.2 Test condition B: Wire pull, single bond (not recommended for wire diameters less than .005 inch (0.125 mm)). This test is employed when it is desired to test the wire bonds separately at the die or substrate and lead post or when, due to device construction, condition A is inappropriate. Product acceptance is based on testing an equal number of both bonds. When testing die and post bonds separately, the wire shall be cut to provide two ends accessible for pull testing both die and post bonds. In the case of short wire runs, it may be necessary to cut the wire close to one termination in order to allow pull at the opposite termination. The free end of the wire shall be gripped in a suitable device and simple pulling action applied. When the wire exits from the top of the die bond (bait or nailhead bonds), the force shall be applied in a direction, that is within 5° of normal to the surface of the die or substrate. When the wire exits from the side of the bond (die or lead post), the force shall be applied at an angle equal to or greater than 45° to the surface of the die. When failure occurs, the force causing the failure and failure category shall be recorded.

3.1.3 Test condition C: Clip pull. This test is employed for internal clips at the die or substrate and the lead posts of discrete devices. The pull is applied by inserting a hook under the clip as close to the die attachment point as practical with the device clamped and the pulling force applied approximately in a direction within 5° of normal to the die or substrate. When a failure occurs, the force causing the failure and the failure category shall be recorded.

3.2 Failure criteria. Any bond pull which results in a separation under an applied stress less than that indicated in table 2036.1 as the required minimum bond strength for the indicated test condition, composition, and construction shall constitute a failure.

3.2.1 Failure category.

3.2.1.1 Failure categories for wire bonds. Failure categories for wire bonds are as follows:

a. Wire break at neckdown point (reduction of cross section due to bonding process).

b. Wire break at point other than neckdown.

c. Failure in bond (interface between wire and metallization at die).

d. Failure in bond (interface between wire and plating or metallization) at package post, substrate, or other than at the die.

e. Lifted metallization from die.

f. Lifted metallization or plating from substrate or package post.

g. Fracture of die.

h. Fracture of substrate.

3.2.1.2 Failure categories for clips. Failure categories for clip are as follows:

a. Failure in bond (interface between clip and metallization) at die.

b. Lifted metallization at die.

c. Separation of clip from package post.

d. Fracture of die.

The stress required to achieve separation and the category of the separation or failure shall be recorded.

3.3 Procedure in the event of production sampling failure (unencapsulated devices). If a sample contains more than the allowed number of defects, the machine(s) from which the sample was taken shall not be allowed to produce additional JAN product until a sample has been tested and passed. All devices bonded on the machine(s) that produced the defective(s) since the last acceptable sample inspection will either be rejected or subjected to a 100 percent non-destructive bond pull at a force of one-half the minimum specified bond pull limit for the particular size wire (see table 2037-1 or figure 2037-1). A non-destructive pull force of $X - 3\sigma/2$ maybe substituted for this value provided $\sigma \leq .2$ X. The statistical data for this shall be obtained from actual pull data from the last full acceptable days production. X is the average pull strength and σ is the standard deviation. If 99.999 percent pure aluminum annealed wire is used, the divisor in the equation shall be changed to three and the sentence above will then read "one-third the minimum specified bond pull limit." This procedure shall not be used if the defective resulted from die fracture since this may indicate damage to the die which cannot be screened by non-destructive testing.

4. Summary. The following details shall be specified in the detail specification:

a. Test condition letter (see 3.).

b. Minimun bond strength, if other than as specified in 3.2 or details of required strength distributions, if applicable.

c. Sample plan (if other than 10) or number and selection of bond pulls to be tested and if applicable, the number of devices.

d. Requirements for reporting of separation forces and failure categories, when applicable (see 3.2.1).

TABLE 2037-1. Minimum bond strength.

Test condition	Wire composition and diameter inches 2/	Construction 3/	Minimum bond strength (grams force) 1/	
			Preseal	Post seal 4/
A	Au 0.0007	Wire	1.5	1.2
A	A1 0.0010	Wire	2.5	1.5
	Au 0.0010		3.0	2.5
A	A1 0.0013	Wire	3.0	2.0
	Au 0.0013		4.0	3.0
A	A1 0.0015	Wire	4.0	2.5
	Au 0.0015		5.0	4.0
A	A1 0.002	Wire	5.5	3.8
	Au 0.002		8.0	5.5
A	A1 0.003	Wire	12.0	8.0
	Au 0.003		15.0	12.0
A	A1 0.005	Wire	30.0	21.0
A	A1 0.010	Wire	120.0	80.0
A	A1 0.015	Wire	220.0	160.0
A	A1 0.020	Wire	300.0	240.0
C		Clips	300.0	300.0

1/ For test condition B, the bond strength limit shall be 75 percent of that required for test condition A.
2/ For wire diameters not listed above, use the curves of figures 2037-1 and 2037-2 to determine the pull limit.
3/ For ribbon wire, use the equivalent round wire diameter which gives the same cross-sectional area as the ribbon wire being tested.
4/ Post seat tests to be performed following the processing and screening as applicable.

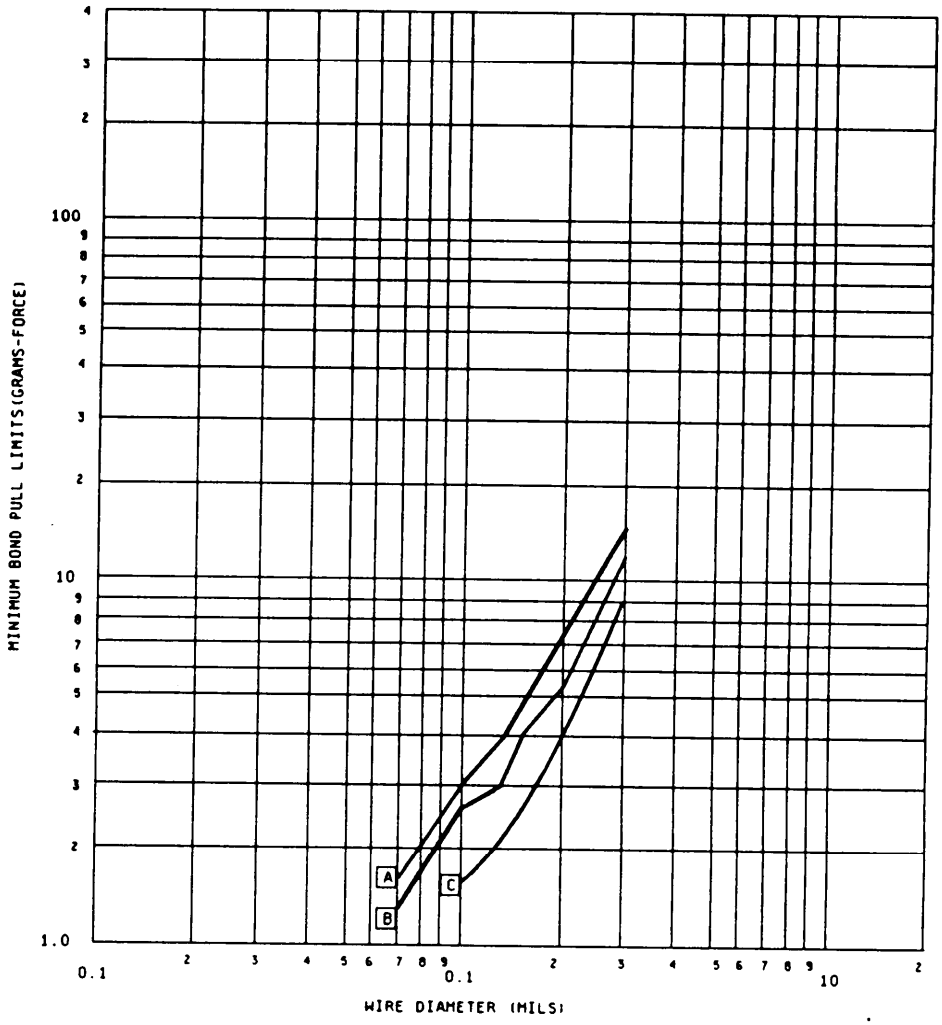

CURVE A - GOLD (PRE-SEAL)
CURVE B - GOLD (POST-SEAL) AND ALUMINUM (PRE-SEAL)
CURVE C - ALUMINUM (POST-SEAL)

FIGURE 2037-1. Bond pull limits.

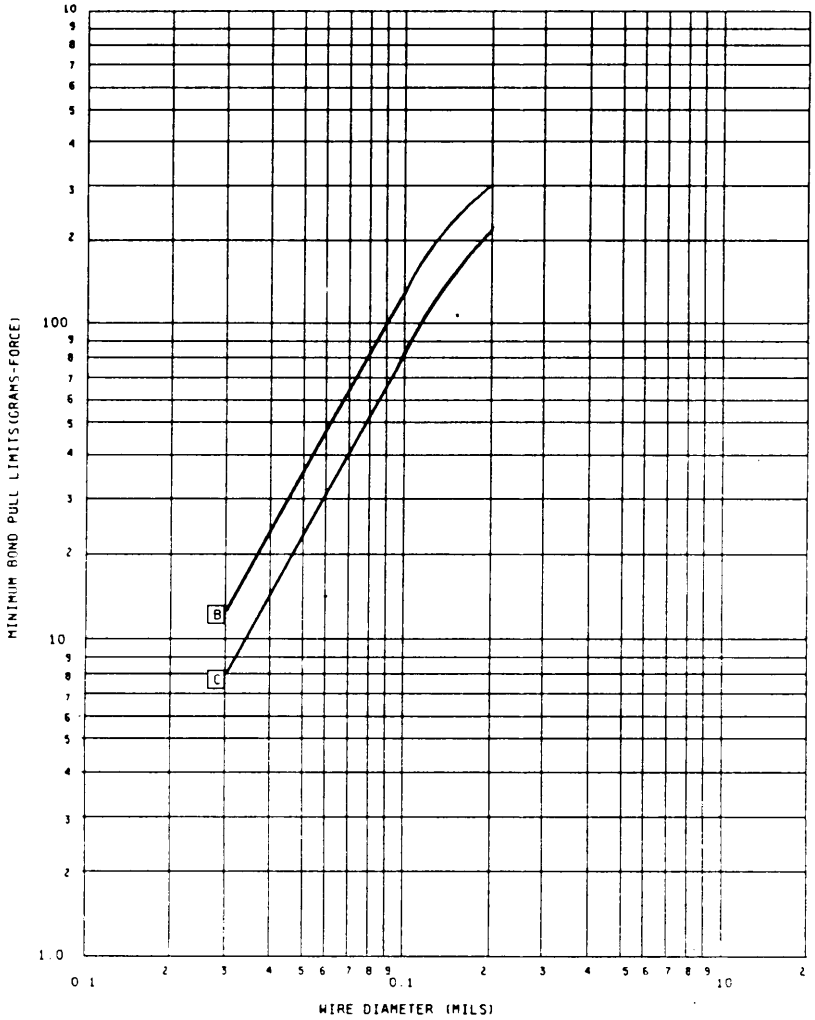

FIGURE 2037-2. Bond pull limits - Continued.

METHOD 2046.2

VIBRATION FATIGUE

1. Purpose. The purpose of this test is to determine the effect on the device of vibration in the frequency range specified.

2. Procedure. The device shall be rigidly fastened on the vibration platform and the (cads or cables adequately secured. The device shall then be subjected to a sample harmonic motion in the range of 60 ±20 Hz, with a constant peak acceleration of 20 g minimum. The vibration shall be applied for 32 ±8 hours, minimum, in each of the orientations X, Y, and Z for a total of 96 hours, minimum.

3. Summary. The measurements after test shall be specified in the detail specification.

METHOD 2051.1

VIBRATION NOISE

1. Purpose. The purpose of this test is to measure the amount of electrical noise produced by the device under vibration.

2. Procedure. The device and its leads shall be rigidly fastened on the vibration platform and the leads or cables adequately secured. The device shall be vibrated with simple harmonic motion with a constant peak acceleration of 20 g minimum. The vibration frequency shall be varied approximately logarithmically between 100 and 2,000 Hz. The entire frequency range shall be traversed is not less than four minutes for each cycle. This cycle shall be performed once in each of the orientations X_1, Y_1, and Z_1 (total of 3 times), so that the motion shall be applied for a total period of approximately 12 minutes. The specified voltages and currents shall be applied in the test circuit. The maximum noise-output voltage across the specified load resistance during traverse shall be measured with an average-responding root-means-square (rms) calibrated high impedance voltmeter. The meter shall measure, with an error of not more than 3 percent, the rms value of a sine-wave voltage at 2,000 Hz. The characteristic of the meter over a bandwidth of 20 to 20,000 Hz shall be ±1 decibel (dB) of the value at 2,000 Hz, with an attenuation rate below 20 and above 20,000 Hz of 6.±2 dB per octave. The maximum inherent noise in the circuit shall be at least 10 dB, below the specified . noise-output voltage.

3. Summary. The following conditions shall be specified in the detail specification:

a. Test voltages and currents (see 2.).

b. Load resistance (see 2.).

c. Post test measurements.

d. Noise-output voltage limit.

METHOD 2052.2

PARTICLE IMPACT NOISE DETECTION (PIND) TEST

1. Purpose. The purpose of this test is to detect loose particles inside a device cavity. The test provides a nondestructive means of identifying those devices containing particles of sufficient mass that, upon impact with the case, excite the transducer.

2. Apparatus. The equipment required for the PIND test shall consist of the following (or equivalent):

a. A threshold detector to detect particle noise voltage exceeding a preset threshold of the absolute value of 20 ±1 mV peak reference to system ground.

b. A vibration shaker and driver assembly capable of providing essentially sinusoidal motion to the DUT at:

(1) Condition A: 20 g's peak at 40 to 250 Hz.

(2) Condition B: 10 g's peak at 60 Hz minimum.

c. PIND transducer, calibrated to a peak sensitivity of -77.5 ±3 dB in regards to one volt per microbar at a point within the frequency of 150 to 160 kHz.

d. A sensitivity test unit (STU) (see figure 2052-1) for periodic assessment of the PIND system performance. The STU shall consist of a transducer with the same tolerances as the PIND transducer and a circuit to excite the transducer with a 250 microvolt ±2O percent pulse. The STU shall produce a pulse of about 20 mV peak on the oscilloscope when the transducer is coupled to the PIND transducer with attachment medium.

e. PIND electronics, consisting of an amplifier with a gain of 60 ±2 dB centered at the frequency of peak sensitivity of the PIND transducer. The noise at the output of the amplifier shall not exceed 10 mV peak.

f. Attachment medium. The attachment medium used to attach the DUT to the PIND transducer shall be the" same attachment medium as used for the STU test.

g. Shock mechanism or tool capable of imparting shock pulses of 1,000 ±200 g's peak to the DUT. The duration of the main shock shall not exceed 100 µs. If an integral co-test shock system is used the shaker vibration may be interrupted or perturbed for period of time not to exceed 250 ms from initiation of the last shock pulse in the sequence. The co-test duration shall be measured at the SO *5 percent point.

3. Procedures.

3.1 Test equipment setup. Shaker drive frequency and amplitude shall be adjusted to the specified conditions. The shock pulse shall be adjusted to provide 1,000 ±200 g's peak to the DUT.

3.2 Test equipment checkout. The test equipment checkout shall be performed a minimum of one time per operation shift. Failure of the system to meet checkout requirements shall require retest of all devices tested subsequent to the last successful system checkout.

3.2.1 Shaker drive system checkout. The drive system shall achieve the snaker frequency and the shaker amplitude specified. The drive system shall be calibrated so that the frequency settings are within ±8 percent and the amplitude vibration setting are within ±10 percent of the nominal values. If a visual displacement monitor is affixed to the transducer, it may be used for amplitudes between .04 and .12 inch (1.02 and 3.05 mm). An accelerometer may be used over the entire range of amplitudes and shall be used below amplitudes of .040 inch (1.02 mm).

3.2.2 Detection system checkout. With the shaker deenergized, the STU transducer shall be mounted face-to-face and coaxial with the PIND transducer using the attachment medium used for testing the devices, prior to attaching any special fixtures. The STU shall be activated several times to verify low level signal pulse visual and threshold detection on the oscilloscope. Not every application of the STU will produce the required amplitude. All pulses which are greater than 20 mV shall activate the detector.

3.2.3 System noise verification. System noise will appear as a fairly constant band and must not exceed 20 mV peak to peak when observed for a period of 30 to 60 seconds.

3.3 Test sequence. The following sequence of operations (a. through i.) constitute one test cycle or run.

a. Three pre-test shocks.

b. Vibration 3±1 seconds.

c. Three co-test shocks.

d. Vibration 3±1 seconds.

e. Three co-test shocks.

f. Vibration 3±1 seconds.

g. Three co-test shocks.

h. Vibration 3±1 seconds.

i. Accept or reject.

3.3.1 Mounting requirements. Special precautions (e.g., in mounting, grounding of DUT leads, or grounding of test operator) shall be taken as necessary to prevent electrostatic damage to the DUT.

Most part types will mount directly to the transducer via the attachment medium. Parts shall be mounted with the largest flat surface against the transducer at the center or axis of the transducer for maximum sensitivity. Where more than one large surface exists, the one that is the thinnest in section an has the most uniform thickness shall be mounted toward the transducer, e.g., flat packs are mounted top down against the transducer. Small axial-lead, right circular cylindrical parts are mounted with their axis horizontal and the side of the cylinder against the transducer. Parts with unusual shapes may require special fixtures. Stud packages shall utilize a cylindrical fixture with a non-thru hole such that the bottom of the fixture is solid. The inner hole diameter shall be minimized and the fixture diameter shall be greater than the hex flat dimension. Such fixtures shall have the following properties:

(1) Low mass.

(2) High acoustic transmission (aluminum alloy 7075 works well).

(3) Full transducer surface contact, especially at the center.

(4) Maximum practical surface contact with test part.

(5) No moving parts.

(6) Suitable for attachment medium mounting.

3.3.2 Test monitoring. Each test cycle (see 3.3) shall be continuously monitored, except for the period during co-test shocks and 250 ms maximum after the shocks. Particle indications can occur in one or any combination of the three detection systems as follows:

a. Visual indication of high frequency spikes which exceed the normal constant background white noise level.

b. Audio indication of clicks, pops, or rattling which is different from the constant background noise present with no DUT on the transducer.

c. Threshold detection shall be indicated by the lighting of a lamp or by deflection of the secondary oscilloscope trace.

3.4 Failure criteria. Any noise bursts as detected by any of the three detection systems exclusive of background noise, except those caused by the shock blows, during the monitoring periods shall be cause for rejection of the device. Rejects shall not be retested except for retest of all devices in the event of test system failure. If additional cycles of testing on a lot are specified, the entire test procedure (equipment setup and checkout mounting, vibration, and co-shocking) shall be repeated for each retest cycle. Reject devices from each test cycle shall be removed from the lot and shall not be retested in subsequent lot testing.

4. Summary. The following details shall be specified in the applicable detail specification:

a. Test condition letter A or B.

b. Lot acceptance/rejection criteria (if applicable).

c. The number of test cycles, if other than one.

d. Pre-test shock level and co-test shock level, if other than specified.

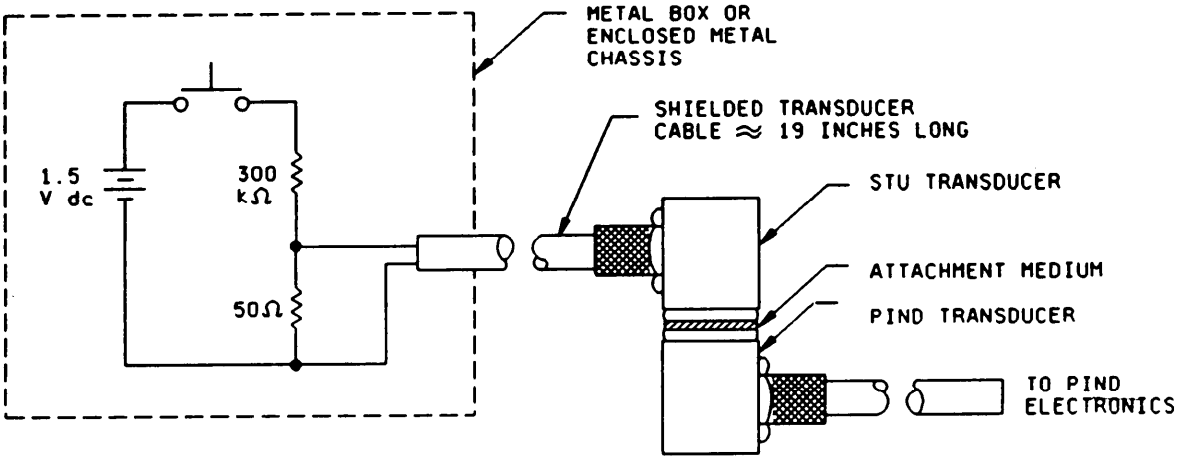

NOTES:

1. Pushbutton switch: Mechanically quiet, fast make, gold contacts. E.G. T2 SM4 microswitch.
2. Resistance tolerance five percent noninductive.
3. Voltage source can be a standard dry cell.
4. The coupled transducers must be coaxial during test.
5. Voltage output to STU transducer 250 microvolt, ±20 percent.

FIGURE 2052-1. Typical STU.

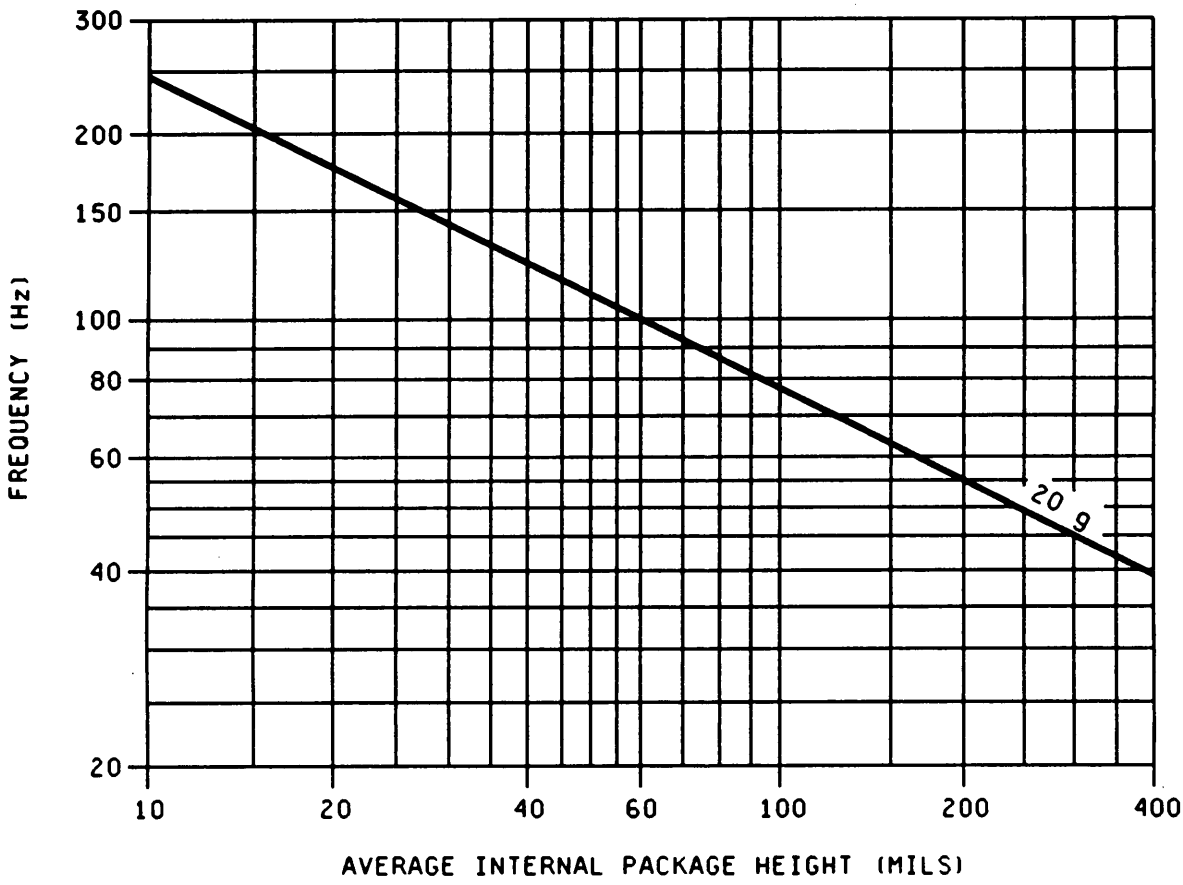

FIGURE 2052-2. Package height versus test frequency for 20 g's acceleration.

METHOD 2056.1

VIBRATION, VARIABLE FREQUENCY

1. Purpose. The variable-frequency-vibration test is performed for the purpose of determining the effect on component parts of vibration in the specified frequency range.

2. Procedure.

2.1 Mounting. The device shall be rigidly fastened on the vibration platform and the leads or cables adequately secured.

2.2 Amplitude. The device shall be subjected to a constant peak acceleration of 20 g minimum.

2.2.1 Frequency range. The vibration frequency shall be varied approximately logarithmically between 100 and 2,000 Hz.

2.2.2 Sweep time and duration. The entire frequency range of 100 to 2,000 Hz and return to 100 Hz shall be traversed in not less than four minutes. This cycle shall be performed 4 times in each of the orientations X, Y, and Z (a total of 12 times), so that the motion shall be applied for a total period of approximately 48 minutes.

3. Summary. The measurements after test shall be specified in the detail specification.

METHOD 2057.2

VIBRATION, VARIABLE FREQUENCY (MONITORED)

1. Purpose. This test is performed for the purpose of detecting malfunctions of semiconductor devices during vibration in the specified frequency range at the specified acceleration.

2. Procedure.

2.1 Mounting. The device shall be rigidly fastened on the vibration platform. Special care is required to ensure position electrical connection to the device leads to prevent intermittent contacts during vibration. Care must also be exercised to avoid magnetic fields in the area of the device being vibrated.

2.2 Amplitude. The device shall be vibrated with a simple harmonic motion with a constant peak . acceleration of 20 g minimum. The acceleration shall be monitored at a point where the 'g' level is equivalent to that of the support point for the device(s).

2.3 Frequency range. The vibration shall be varied logarithmically between 100 and 2,000 Hz.

2.4 Sweep time and duration. The entire frequency range of 100 to 2,000 Hz and return to 100 Hz shall be traversed in not less than 8 minutes. This frequency range shall be executed at one time in each of the orientations X, Y, and Z (total of 3 times) so that the motion shall be applied for a total of 24 minutes minimum. Interruptions are permitted provided the requirements for rate of change and test duration are met . Completion of vibration within any separate frequency band is permissible before going on to the next band.

3. Measurements. With the specified dc voltages and currents applied, the semiconductor device shall be monitored continuously, during the vibration period, for intermittent opens and shorts. The monitoring equipment shall be capable of detecting voltage or current changes of the duration and magnitude specified on the individual specification. In addition, the equipment shall utilize a positive-indication "go-no go" technique or a recorded trace. Equipment requiring continuous visual monitoring, such as an oscilloscope, shall not be used.

4. Summary. The following conditions shall be specified in the detail specification:

a. Electrical test conditions.

b. The duration and magnitude of the voltage or current change.

c. Post-test measurements.

METHOD 2066

PHYSICAL DIMENSIONS

1. Purpose. The purpose of this examination is to check the physical dimensions of the device.

2. Apparatus. Equipment used in this examination shall be capable of demonstrating conformance to the requirements of the individual specification.

3. Procedure. The semiconductor device shall be examined to verify that the physical dimensions are as specified in the individual specification.

4. Summary. The dimensions which are capable of physically describing the device shall be specified in the detail specification.

METHOD 2068

EXTERNAL VISUAL FOR NONTRANSPARENT GLASS-ENCASED, DOUBLE PLUG, NONCAVITY AXIAL LEADED DIODES

1. Purpose. The purpose of this examination is to visually inspect glass-encased, double plug, noncavity, axial leaded devices for cracks which may affect the integrity of the hermetic seal.

2. Apparatus. A binocular microscope with a magnification of 10x to 20x and sufficient lighting for visual inspection of the glass body.

3. Procedure. The examination shall be performed prior to any body coating. The devices shall be examined under a magnification of 10x to 20x for evidence of glass body cracks.

3.1 Failure criteria. Any device exhibiting cracks in the body glass shall be rejected. Cracks or chipouts in the meniscus area at either end of the body are not cause for rejection.

METHOD 2069

PRE-CAP VISUAL, POWER MOSFET'S

1. Purpose. The purpose of this inspection is to verify the construction and quality of workmanship in the assembly process to the point of pre-cap inspection. These various inspections and tests are intended to verify compliance with the requirements of the applicable detail specification.

2. Appatatus. The apparatus for this inspection shall consist of the following:

a. Optical equipment capable of the specified magnification(s).

b. Adequate fixturing for handling the devices being inspected without causing damage.

c. Adequate covered storage and transportation containers to protect devices from mechanical . damage and environmental contamination.

d. Any visual standards (e.g., drawings, photographs) necessary to enable the inspector to make objective decisions as to the acceptability of devices being inspected.

3. Procedure.

3.1 General. The devices shall be examined in a suitable sequence of observations with the specified magnification range to determine compliance with the requirements of this document and the applicable detail specification.

a. Sequence of inspection. The order in which criteria are presented is not a required order of inspection and may be varied at the discretion of the manufacturer.

b. Inspection control. Within the time interval between visual inspection and preparation for sealing, devices shall be stored in a controlled environment (an environment in which air-borne particles and relative humidity are controlled). The use of a positive pressure inert gas environment, such as dry nitrogen, shall satisfy the requirement of storing in a controlled environment. Unless a cleaning operation is performed prior to sealing, devices inspected in accordance with this specification shall be inspected in a class 100,000 environment in accordance with FED-STD-209. The maximum allowable relative humidity shall not exceed 65 percent. Devices shall be in clean covered containers when transferred through any uncontrolled environment.

c. Magnification. Low magnification inspection shall be performed with either a monocular, binocular or-stereo microscope and the inspection performed with any appropriate angle, with the device under suitable illumination. High magnification may be used to verify a discrepancy which has first been noted at low magnification.

(1) High magnification inspection shall be performed within the range of 100x to 400x.

(2) Low magnification shall be performed within the range of 30x to 100x.

3.2 Bonding inspection (low magnification). This inspection and criteria shall be the required inspection for the bond type(s) and location(s) to which they are applicable when viewed from above (see figures 2069-1 and 2069-2). (Wire tail is not considered part of the bond when determining physical bond dimensions.) No device shall be acceptable which exhibits any of the following defects.

3.2.1 Gold ball bonds.

a. Gold ball bonds where the ball bond diameter is less than 2.0 times or greater than 5.0 times the bonding wire diameter.

b. Gold ball bonds where the wire exit is not completely within the periphery of the ball.

c. Gold ball bonds where the exiting wire is not within boundaries of the bonding pad.

d. Any visible intermetallic formation at the periphery of any gold ball bond.

3.2.2 Wedge bonds.

a. Ultrasonic/thermasonic wedge bonds that are less than 1.2 times or greater than 3.0 times the wire diameter in width, or are less than 1.5 times or greater than 3.0 times the wire diameter in length, before cutoff, as viewed from above.

b. Thermocompression wedge bonds that are less than 1.2 times or greater than 3.0 times the wire diameter in width or are less than 1.5 times or greater than 3.0 times the wire diameter in length.

3.2.3 Tailless trends (crescent).

a. Tailless bonds that are less than 1.2 times or greater than 5.0 times the wire diameter in width, or are less than 0.5 times or greater than 3.0 times the wire diameter in length.

b. Tailless bonds where the bond impression does not cover the entire width of the wire.

3.2.4 General (gold ball, wedge and tailless). As viewed from above, no device shall be acceptable which exhibits any of the following defects:

a. Bonds on the die where less than 75 percent of the bond is within the unglassivated bonding pad area (except where due to geometry, the bonding pad is smaller than the bond, the criteria shall be 50 percent).

b. Wire bond tails that extend over and make contact with any metallization not covered by glassivation and not connected to the wire.

c. Wire bond tails that exceed two wire diameters in length at the die bonding pad or four wire diameters in length at the package or post.

d. Bonds on the package post that are not bonded entirely on the flat surface of the post top.

e. A bond on top of another bond, bond wire tail, or residual segment of lead wire. An ultrasonic wedge bond alongside a previous bond where the observable width of the first bond is reduced less than .25 mil is considered acceptable.

f. Bonds placed so that the separation between bond and adjacent unglassivated die metallization not connected to it, is less than 1.0 mil.

g. Rebonding.

h. Gold bonds where less than 50 percent of the bond is located within an area that is free of eutectic melt.

3.2.5 Internal lead wires. This inspection and criteria shall be required inspection for the location(s) to which they are applicable when viewed from above. No device shall be acceptable that exhibits any of the following defects:

a. Any wire that comes closer than one wire diameter to unglassivated operating metallization, another wire (common wires excluded), package post, unpassivated die area of opposite polarity, or any portion of the package of opposite polarity including the plane of the lid to be attached (except by design, but in no case should the separation be less than 0.25 mil). (Within a 5.0 mil spherical radial distance from the perimeter of the bond on the die surface, the separation shall be greater than 1.0 mil.)

b. Nicks, tears, bends, cuts, crimps, scoring, or neckdown in any wire that reduces the wire diameter by more than 25 percent, except in bond deformation area.

c. Missing or extra lead wires.

d. Bond lifting or tearing at interface of pad and wire.

e. Any wire which runs from die bonding pad to package post and has no arc or stress relief.

f. Wires which cross other wires, except common connectors, except by design, in which case the clearance shall be 1.0 mil minimum.

g. Wire(s) not in accordance with bonding diagram (unless allowed in design documentation, for tuning purposes).

h. Kinked wires (an unintended sharp bend) with an interior angle of less than 90 degrees or twisted wires to an extent that stress marks appear.

i. Wire (ball bonded devices) not within 10° of the perpendicular to the surface of the chip for a distance of greater than 0.5 mil before bending toward the package post or other termination point.

3.3 Package conditions (low magnification). No device shall be acceptable which exhibits any of the following defects.

3.3.1 Foreign material on die surface. All foreign material or particles may be blown off with a nominal gas blow (approximately 20 psig) or removed with a soft camel hair brush. The device shall then be inspected for the following criteria:

a. Loosely attached conductive particles (conductive particles which are attached by less than one-half of their largest dimension) that are large enough to bridge the narrowest unglassivated active metal spacing (silicon chips or any opaque material shall be included as conductive particles).

b. Liquid droplets, chemical stains, or photoresist on the die surface that bridge any combination of unglassivated metallization or bare silicon areas, except for unused cells.

c. Ink on the surface of the die that covers more than 25 percent of a bonding pad area (or interferes with bonding) or that bridges any combination of unglassivated metallization or bare silicon areas, except for unused cells.

3.3.2 Die mounting.

a. Die to header mounting material which is not visible around at least three sides or 75 percent of the die perimeter. Wetting criteria is not required if the devices pass an approved die attached evaluation test.

b. Any balling of the die mounting material which does not exhibit a fillet when viewed from above.

c. Any flaking of the die mounting material.

d. Any die mounting material which extends onto the die surface or extends vertically above the top surface of the die and interferes with bonding.

3.3.3 Die orientation.

a. A die which is not oriented or located in accordance with the applicable assembly drawing of the device.

b. Die is visibly tipped or tilted (more than 10°) with respect to the die attach surface.

3.3.4 Internal package defects (low magnification inspection) (applicable to headers, bases, caps, and lids). As an alternative to 100 percent visual inspection of lids and caps in accordance with the criteria of 3.3.1a, the lids or caps may be subjected to a suitable cleaning process and quality verification procedure approved by the qualifying activity, provided the lids or caps are subsequently held in a controlled environment until capping or preparation for seal.

a. Any header or post plating which is blistered, flaked, cracked, or any combination thereof.

b. Any conductive particle which is attached by less than one-half of the longest dimension.

c. A bubble or a series of interconnecting bubbles in the glass surrounding the pins which are more than one-half the distance between the pin and body or pin-to-pin.

d. Header posts which are severely bent.

e. Any glass, die, or other material greater than one mil in its major dimension which adheres to the flange or side of the header and would impair sealing.

f. Any stain, varnish, or header discoloration which appears to extend under a die bond or wire bond.

g. For isolated stud packages:

(1) Any defect or abnormality causing the designed isolating paths between the metal island to be reduced to less than 50 percent of the design separation.

(2) A crack or chip-out in the substrate.

3.3.5 Carrier defects ((e.g., BeO, alumina) substrate).

a. Any chip-out in the carrier material.

b. Carrier metallization which is smeared or is obviously not uniform in metallization design pattern to the extent that there *is* less than 50 percent of the original design separation, or 0.5 mil whichever is less, between operating pads; paths, lid mounting metallization, edges, or any combination thereof.

c. Any crack in the BeO or operating metallization that would affect hermetic sea or die mounting metallization. (Tooling marks or cold form interface lines are not cracks and are not cause for rejection.)

d. Any metallization lifting, peeling, or blistering (on the carrier surface).

e. Any attached conductive foreign material which bridges any combination of metallization paths, leads, or active circuit elements.

f. A scratch or void in the metallization which exposes the substrate anywhere along its length and leaves less than 75 percent of the original metal width undisturbed.

NOTE: Occasionly package metallization is intentionally burnished or scratched, in areas which require wire bond attachment, to improve surface bondability; such conditions are not cause for rejection. Burnished or scratched areas must satisfy the criteria of 3.3.4b.

g. Excessive scratches in carrier metallization due to abuse in handling or processing.

h. Any staple, bridge, or clip with solder joint which exhibits less than 50 percent wetting around the section that is attached to the package.

i. Any header post(s) which are not perpendicular within 10° of the horizontal plane of the header.

j. Any lead attach eutectic or solder which extends across greater than 50 percent of the design separation gap between metallization pads.

4. Summary. The following details shall be specified in the applicable detail specification:

a. Exceptions or additions to the inspection method.

b. Where applicable, any conflicts with approved circuit design topology or construction.

c. Where applicable; gauges, drawings, and photographs that are to be used as standards for operator comparison.

d. When applicable, specific magnification.

A. Tailless or crescent.

NOTES:
1. 1.2 D ≤ W ≤ 5.0 D (width).
2. 0.5 D ≤ L ≤ 3.0 D (length).

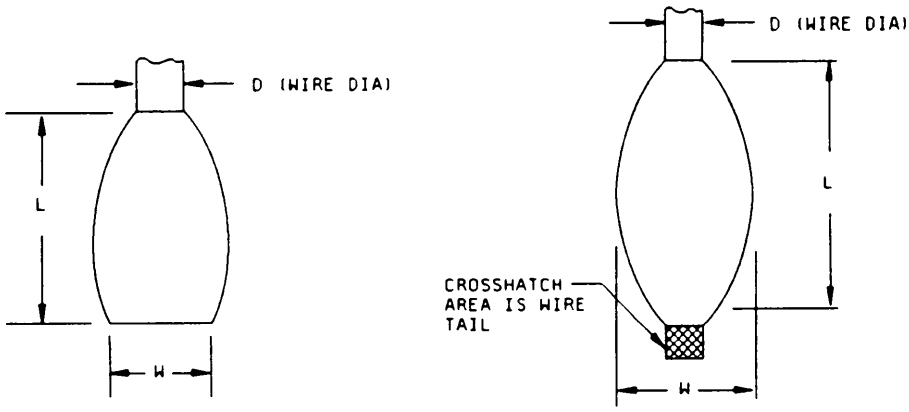

B. Wedge.

Ultrasonic

NOTES:
1. 1.0 D ≤ W ≤ 3.0 D (width)
2. 1.5 D ≤ L ≤ 5.0 D (length)

Thermocompression

NOTES:
1. 1.2 D ≤ W ≤ 3.0 D (width)
2. 1.5 D ≤ L ≤ 5.0 D (length)

FIGURE 2069-1. Bond dimensions.

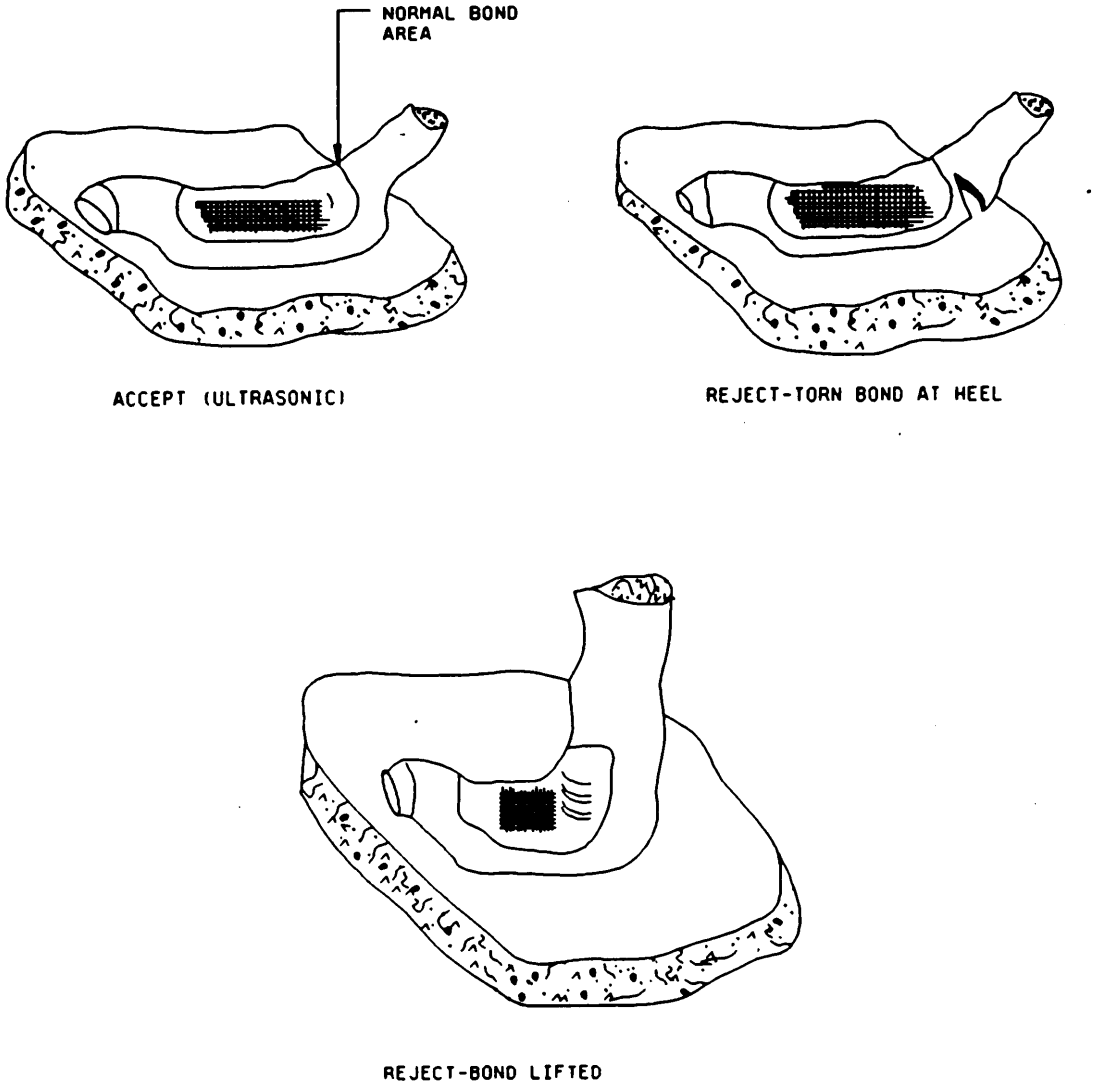

FIGURE 2069-2. Lifted/torn bonds.

METHOD 2070.1

PRE-CAP VISUAL
MICROWAVE DISCRETE AND MULTICHIP TRANSISTORS

1. Purpose. The purpose of this inspection is to verify the construction and quality of workmanship in wafer, wafer dc testing, die inspection, and assembly processes to the point of pre-cap inspection. These various inspections and tests are intended to detect and remove transistor die with defects that could lead to device failure during application and to verify compliance with the requirements of the applicable detail specification.

2. Apparatus. The apparatus for this inspection shall consist of the following:

a. optical equipment capable of the specified magnifications, and both normal incident and darkfield lighting.

b. Adequate fixturing for handling the devices being inspected without causing damage.

c. Adequate covered storage and transportation containers to protect devices from mechanical damage and environmental contamination.

d. Any visual standards (e.g., drawings, photographs) necessary to enable the inspector to make objective decisions as to the acceptability of devices being inspected.

3. Procedure.

3.1 General. The devices shall be examined in a suitable sequence of observations with the specified magnification range to determine compliance with the requirements of this document and the applicable detail specification.

a. Sequence of inspection. The order in which criteria are presented is not a required order of inspection and may be varied at the discretion of the manufacturer.

b. Inspection control. Within the time interval between visual inspection and preparation for sealing, devices shall be stored in a controlled environment (an environment in which air-borne particles and relative humidity are controlled). The use of a positive pressure inert gas environment, such as dry nitrogen, shall satisfy the requirement of storing in a controlled environment. Unless a cleaning operation is performed prior to sealing, devices inspected in accordance with this specification shall be inspected in a class 100,000 environment in accordance with FED-STD-209. The maximum allowable relative humidity shall not exceed 65 percent. Devices shall be in clean covered containers when transferred through any uncontrolled environment.

c. Magnification. High magnification inspection shall be performed perpendicular to the die surface with normal incident or darkfield illumination as required. Low magnification inspection shall be Performed with either a monocular, binocular, or stereo microscope and the inspection performed with any appropriate angle, with the device under suitable illumination. High magnification may be used to verify a discrepancy which has first been noted at low magnification.

(1) High magnification inspection shall be performed within the range of 60x to 200x.

(2) Low magnification shall be performed within the range of 30x to 60x.

(3) Wafer inspection shall be performed within the range of 100x to 1,200x, however the lowest magnification used must be high enough to allow this inspection to be performed.

d. General reject criteria: Unless otherwise specified, reject if the defect is present in 25 percent of any one cell or in 10 percent of the entire die.

e. Figures 2070-5 through 2070-9 illustrate different geometries used in fabricating microwave discrete transistors.

3.2 Wafer inspection (may be performed any time after metallization). Each wafer in a run shall be inspected by examining patterns in each of the four quadrants and near the center of the wafer. The sample shall be determined in accordance with table 2070-1.

TABLE 2070-1. Sample sizes and rejects. 1/ 2/

Die on a wafer	Shorts due to bridging		All others	
	Sample size	Reject number	Sample size	Reject number
<501	20	5	50	4
501 to 1,200	32	8	80	6
1,201 to 3,200	50	13	125	8
3,201 to 10,000	80	20	200	11

1/ When inspection is performed prior to probing, the lot size shall be determined by the number of die on the wafer. When inspection is performed after probing, the lot size shall be determined by the number of good electrical die.

2/ At the manufacturer's option, electrically good die from a rejected wafer may be inspected 100 percent for the defect which caused the wafer rejection, provided the same or greater magnification is used.

3.2.1 Metallization inspection. Unless otherwise specified, the 25 percent of a cell and 10 percent of a die reject conditions apply). No die shall be acceptable which exhibits any of the following defects:

a. Metallization misalignment so that there is less than 75 percent coverage of the ohmic contact windows.

b. Contact window that has less than a continuous 50 percent of its perimeter covered by metallization.

NOTE: Metal coverage is not required at the far dielectric steps of the end base contacts under base metal finger tips.

c. Metal must cover 50 percent of the contact that lies over the enhancement area.

d. Metallization bridging, between two normally unconnected metallization paths, which reduces the design separation to less the 50 percent or 0.1 mil whichever is less.

e. Metallization corrosion. Any metallization which shows evidence of corrosion.

f. Metallization adherence. Any metallization which has lifted, peeled, or blistered.

g. Exception: Do not reject for missing or defective run around metal (run around metal is nonactive metal used for probing purposes with multicell devices).

3.2.2 Glassivation and silicon nitride defects. (Unless otherwise specified, the 25. percent of a cell and 10 percent of a die reject conditions apply). No die shall be acceptable which exhibits any of the following defects:

a. Glass crazing that prohibits the detection of voids or scratches during subsequent inspection or that covers more than 25 percent of the die area.

b. Any glassivation which has delaminated.

c. Two or more adjacent active metallization paths which are not covered by glassivation, except by design.

d. Unglassivated areas at the edge of bonding pads which expose silicon.

e. Glassivation which covers more than 25 percent of the designed bonding pad area.

f. Glass crazing covering more than 25 percent of the die area.

g. Glass cracks which form closed loops over adjacent metallization paths.

3.3 Die metallization defects (high magnification). No die shall be acceptable which exhibits any of the following defects.

3.3.1 Metallization scratches and voids exposing underlying material (see figure 2070-1). Unless otherwise specified, the 25 percent of a cell and 10 percent of a die conditions apply.

a. A scratch or void that severs the innermost metallized guard ring.

b. Any die containing a void in the metallization at the bonding pad covering more than 25 percent of the pad area (see figure 2070-1).

c. For all devices with expanded contacts. A scratch whether or not underlying material is exposed or a void, which leaves less than 50 percent undisturbed metal width in the metal connecting the pad and the contact regions.

d. For expanded contacts with more than 10 contact regions. A scratch or void extending across more than 50 percent of the first half of any contact region (beginning at the bonding area) in more than 10 percent of the contact regions.

e. For expanded contacts with less than 10 contact regions. A scratch or void in the contact area which isolates more than 10 percent of the contact regions.

f. Metallization probing. Criteria contained in 3.3.1b shall apply as limitation on probing damage.

3.4 Scribing and die defects (high magnification). No device shall be acceptable which exhibits any of the following defects ‘see figure 2070-2):

a. Unless by design, less than 0.1 mil passivation visible between active metallization or bond pad periphery and the edge of the die.

b. Any chip-out or crack in the active area.

c. Any crack which exceeds 2.0 mils in length beyond the scribe grid or line that points toward active metallization or an active area.

d. Any chip-out that extends to within 1.0 mil of an active area or to within 50 percent of the design spacing, whichever is less.

e. Any crack or chip-out that extends under any active metallization.

f. Reject if more than 25 percent of a depletion ring is missing. A depletion ring encompasses an individual cell. An annular ring encompasses the entire die. A true annular ring will be the same color as the emitter.

3.5 Bonding inspection (low magnification). This inspection and criteria shall be the required inspection for the bond types and locations to which they are applicable when viewed from above (see figures 2070-3 and 2070-4). (Wire tail is not considered part of the bond when determining physical bond dimensions.) No device shall be acceptable which exhibits any of the following defects.

3.5.1 Gold ball bonds.

a. Gold ball bonds where the ball bond diameter is less than 2.0 times or greater than 5.0 times the bonding wire diameter.

b. Gold ball bonds where the wire exit is not completely within the periphery of the ball.

c. Gold ball bonds where the exiting wire is not within boundaries of the bonding pad.

d. Any visible intermetallic formation at the periphery of any gold ball bond.

3.5.2 Wedge bonds.

a. Aluminum wire: Ultrasonic/thermasonic wedge bonds that are less than 1.2 times or greater than 3.0 times the wire diameter in width, or less than 1.5 times or greater than 3.0 times the wire diameter in length.

b. Gold wire: Ultrasonic/thermasonic wedge bonds that are less than 1.0 times or greater that 3.0 times the wire diameter in width, or less than 0.5 times or greater than 3.0 times the wire diameter in length.

c. Thermocompression wedge bonds that are less than 1.2 times or greater than 3.0 times the wire diameter in width or are less than 0.5 times or greater than 3.0 times the wire diameter in length.

3.5.3 Tailless bonds (crescent).

a. Tailless bonds that are less than 1.2 times or greater than 5.0 times the wire diameter in width, or are less than 0.5 times or greater 3.0 times the wire diameter in length.

b. Tailless bonds where the bond impression does not cover the entire width of the wire.

3.5.4 General (gold ball, wedge, and tailless). As viewed from above, no device shall be acceptable which exhibits any of the following defects:

a. Bonds on the die where less than 50 percent of the bond is within the unglassivated bonding pad area.

b. Wire bond tails that extend over and make contact with any metallization not covered by glassivation and not connected to the wire.

c. Wire bond tails that exceed two wire diameters in length at the die bonding pad or four wire diameters in length at the package or post.

d. Bonds on the package post that are not bonded entirely on the flat surface of the post top.

e. A bond on top of another bond, bond wire tail, or residual segment of lead wire. An ultrasonic wedge bond alongside a previous bond where the observable width of the first bond is reduced less than .25 mil is considered acceptable.

f. Bonds placed so that the separation between bond and adjacent unglassivated die metallization not connected to it is less than 1.0 mil, except if the glass does not exhibit cracking, the separation may be 0.1 mil.

g. Rebonding shall be permitted with the following limitations:

(1) No scratched, open, or discontinuous metallization paths or conductor patterns shall be repaired by bridging with or addition of bonding wire or ribbon.

(2) All rebonds shall be placed on at least 50 percent undisturbed metal (excluding probe marks that do not expose oxide) and no more than one rebond attempt at any design bond location shall be permitted at any pad or post and no rebonds shall touch an area of exposed oxide caused by lifting metal.

(3) The total number of rebond attempts shall be limited to a maximum of 10 percent of the total number of bonds in the device. The 10 percent limit on rebonds may be interpreted as the nearest whole number of bonds in the device. A bond shall be defined as a wire to post or wire to bond pad. Bond-offs required to clear the bonder after an unsuccessful first bond attempt need not be considered as rebonds provided they can be identified as bond-offs by being made physically away from normal bond areas. The initial bond attempt need not be visible. A replacement of one wire at one end or an unsuccessful bond attempt at one end of the wire counts as one rebond; a replacement of wire bonded at both ends, or an unsuccessful bond attempt of a wire already bonded at the other end, counts as two rebonds.

h. Gold bonds where less than 50 percent of the bond is located within an area that is free of eutectic melt. The blush area shall not be considered part of the eutectic melt (The blush area is defined as the area where a color change can be seen but not a change in surface texture).

3.5.5 Internal lead wires. This inspection and criteria shall be required inspection for the locations to which they are applicable when viewed from above. No device shall be acceptable that exhibits any of the following defects:

a. Any wire that comes closer than one wire diameter to unglassivated operating metallization, another wire (common wires excluded), package post, unpassivated die area of opposite polarity, or any portion of the package of opposite polarity including the plane of the lid to be attached (except by design, but in no case should the separation be less than .25 mil). (Within a 5.0 miL spherical radial distance from the perimeter of the bond on the die surface, the separation shall be greater than 1.0 mil.)

b. Nicks, tears, bends, cuts, crimps, scoring, or neckdown in any wire that reduces the wire diameter by more than 25 percent, except in bond deformation area.

c. Missing or extra lead wires.

d. Bond lifting or tearing at interface of pad and wire.

e. Any wire which runs from die bonding pad to package post and has no arc or stress relief.

f. Wires which cross other wires, except common connectors, except by design, in which case the clearance shall be 1.0 mil minimum.

g. Wires not in accordance with bonding diagram (unless allowed in design documentation, for tuning purposes).

h. Kinked wires (an unintended sharp bend) with an interior angle of less than 90° or twisted wires to an extent that stress marks appear.

i. Wire (ball bonded devices) not within 10° of the perpendicular to the surface of the chip for a distance of greater than 0.5 mil before bending toward the package post or other termination point.

3.6 Package conditions (low magnification). No device shall be acceptable which exhibits any of the following defects.

3.6.1 Foreign material on die surface. All foreign material or particles may be blown off with a nominal gas blow (approximately 20 psi (138 kPa)) or removed with a soft camel hair brush. The device shall then be inspected for the following criteria:

a. Loosely attached conductive particles (conductive particles which are attached by less than one-half of their largest dimension) that are large enough to bridge the narrowest unglassivated active metal spacing (silicon chips or any opaque material shall be included as conductive particles).

b. Liquid droplets, chemical stains, or photoresist on the die surface that bridge any combination of unglassivated metallization or bare silicon areas, except for unused cells.

c. Ink on the surface of the die that covers more than 25 percent of a bonding pad area (or interferes with bonding) or that bridges any combination of unglassivated metallization or bare silicon areas, except for unused cells.

d. Any entrapped opaque material which appears to extend over metallization.

3.6.2 Die mounting.

a. Die to header mounting material which is not visible around at least three sides or 75 percent of the die perimeter. Wetting criteria is not required if the devices pass an approved die attached evaluation test.

b. Any balling of the die mounting material which does not exhibit a fillet when viewed from above.

c. Any flaking of the die mounting material.

d. Any die mounting material which extends onto the die surface beyond the scribe zone and comes closer than 0.5 mil to any active area or metallization, or extends vertically above the top surface of the die and interferes with bonding.

3.6.3 Die orientation.

a. A die which is not oriented or located in accordance with the applicable assembly drawing of the device.

b. Die is visibly tipped or tilted (more than 10°) with respect to the die attach surface.

3.6.4 Internal package defects (applicable to headers, bases, caps, and lids). As an alternative to 100 percent visual inspection, the lids or caps may be subjected to a suitable cleaning process and quality verification procedure approved by the qualifying activity, provided the lids or caps are subsequently held in a controlled environment until capping or preparation for seal.

a. Any header or post plating which is blistered.

b. Any conductive particle which is attached by less than one-half of the longest dimension.

c. For isolated heat sink packages:

(1) Any defect or abnormality causing the designed isolating paths between the metal islands to be reduced to less than 50 percent of the design separation or reduced to 0.2 mil, whichever is less.

(2) A crack in the substrate.

3.6.5 Carrier defects ((e.g., BeO, alumina) substrate).

a. Any chip-out in the carrier material.

b. Carrier metallization which is smeared or is obviously not uniform in metallization design pattern to the extent that there is less than 50 percent of the original design separation, or 0.5 mil whichever is less, between operating pads, paths, lid mounting metallization, edges, or any combination thereof.

c. Any crack in the BeO or operating metallization that would affect hermetic seal or die mounting metallization. (Tooling marks or cold form interface lines are not cracks and are not cause for rejection.)

d. Any metallization lifting, peeling, or blistering (on the carrier surface).

e. Any attached conductive foreign material which bridges any combination of metallization paths, leads, or active circuit elements.

f. A scratch or void in the metallization which exposes the substrate anywhere along its length and leaves less than 75 percent of the original metal width undisturbed.

NOTE: Occasionly package metallization is intentionally burnished or scratched, in areas which require wire bond attachment, to improve surface bondability; such conditions are not cause for rejection. Burnished or scratched areas must satisfy the criteria of 3.6.4b.

g. Excessive scratches in carrier metallization due to abuse in handling or processing.

h. Any staple, bridge, or clip with solder joint which exhibits less than 50 percent wetting around the section that is attached to the package.

i. Any header posts which are not perpendicular within 10° of the horizontal plane of the header.

j. Any lead attach eutectic or solder which extends across greater than 50 percent of the design separation gap between metallization pads.

3.7 Capacitor defects (high magnification).

a. Scratches through the metal that extend the length of the metal and expose underlying oxide.

b. Any metallization peeling (except due to bond tail pull).

c. Any metallization which shows evidence of corrosion.

d. Cracks in the silicon that point toward the metal and are within 1 mil of the metal (except for ground bar portion).

e. Chip-outs within 0.5 mil of the metal (except for ground bar portion).

f. Metal that has been gouged or probed over 20 percent of a bonding pad area and exposes underlying oxide.

g. Mounting material which is not visible around at least three sides or 75 percent of the capacitor perimeter. Wetting criteria is not required if the devices pass an approved capacitor attach evaluation test. (This inspection is to be performed at low magnification.)

NOTE: Multiple bonding is allowable for tuning purposes, however initial bond wire shall be completely removed before rebonding and must be in accordance with design documentation.

3.8 Alignment (This applies to 25 percent of any one cell or 10 percent of any die). Reject any diffusion line which touches another diffusion line, except for contact enhancements, which can touch an active area of the same type. Emitter contacts can touch emitter base junction but cannot cross. Base contacts must engage 50 percent or more of the contact enhancement.

NOTE: Contacts are not diffused.

3.9 Resistors (criteria applies to 25 percent of any one cell or 10 percent of any die.

Process level	Defect	Repect
NICR resistor	Pinched	Resistor is less than 90 percent of its intended design width.
	Undercutting	Resistor is less than 75 percent of its intended design width.
	Bridging or excess NICR	Bridging between discrete resistor pattern.
Diffused resistors	Oxide defects Poor definitions	No visible opening.
	Misalignment	Contacting less than 90 percent of its intended design width.
	Undercutting	Resistor less than 75 percent of its intended design width.
	Over etched	Resistor is greater than 125 percent of its intended design width.
Poly SI resistor	Pinched	Resistor is less than 90 percent of its intended design width.
Poly SI resistor	Undercut	Resistor is less than 75 percent of its intended design width.
	Bridging or excess poly SI	Bridging between discrete resistor pattern.
	Misalignment	Contacting less than 75 percent of the design separation.

Reject if 25 percent of any one cell or 10 percent of any die exhibits burned or missing resistors.

3.9.1 NICR resistor. Thin flim deposited and patterned usually connecting emitter fingers to emitter feed metal to control current. It can also be used as a passive element in RF IC's.

3.9.2 Poly SI resistors (bevel). Thin film of poly SI is deposited, doped, and patterned usually connecting emitter fingers to emitter feed metal to control current. It can also be used as passive elements in RF IC's.

3.9.3 Diffused resistors (contact appearance). A diffused area connecting emitter fingers to emitter feed metal used to control current.

3.9.4 Contacts and diffusion defects (contacts are not diffused). Reject if contacts are less than 50 percent of design on 10 percent of the die. Reject any die that has a discontinuous implant or diffusion line effecting more than 10 percent of the die. A discontinuous line is a line that wanders but does not close on itself. Reject any die where an implant or diffusion fault bridges between two diffuse areas, any two metallized stripes of any combination not intended by design. This must effect greater than 10 percent of the die. Reject any implant or diffused area that is less than 50 percent of design.

3.9.5 Passivation or oxide defects. This applies to 25 percent of a cell and 10 percent of the die. Reject any active junction not covered by passivation or glassivation. Reject for absence of passivation or oxide visible at the edge and continuing under the metallization causing a short between the metal and the underlying material (unless by design). Reject for passivation or oxide defects that allows bridging between any two metallized stripes.

4. Summary. The following details shall be specified in the applicable detail specification:

a. Exceptions or additions to the inspection method.

b. Where applicable, any conflicts with approved circuit design topology or construction.

c. Where applicably, gauges, drawings, and photographs that are to be used as standards for operator comparison.

d. When applicable, specific magnification.

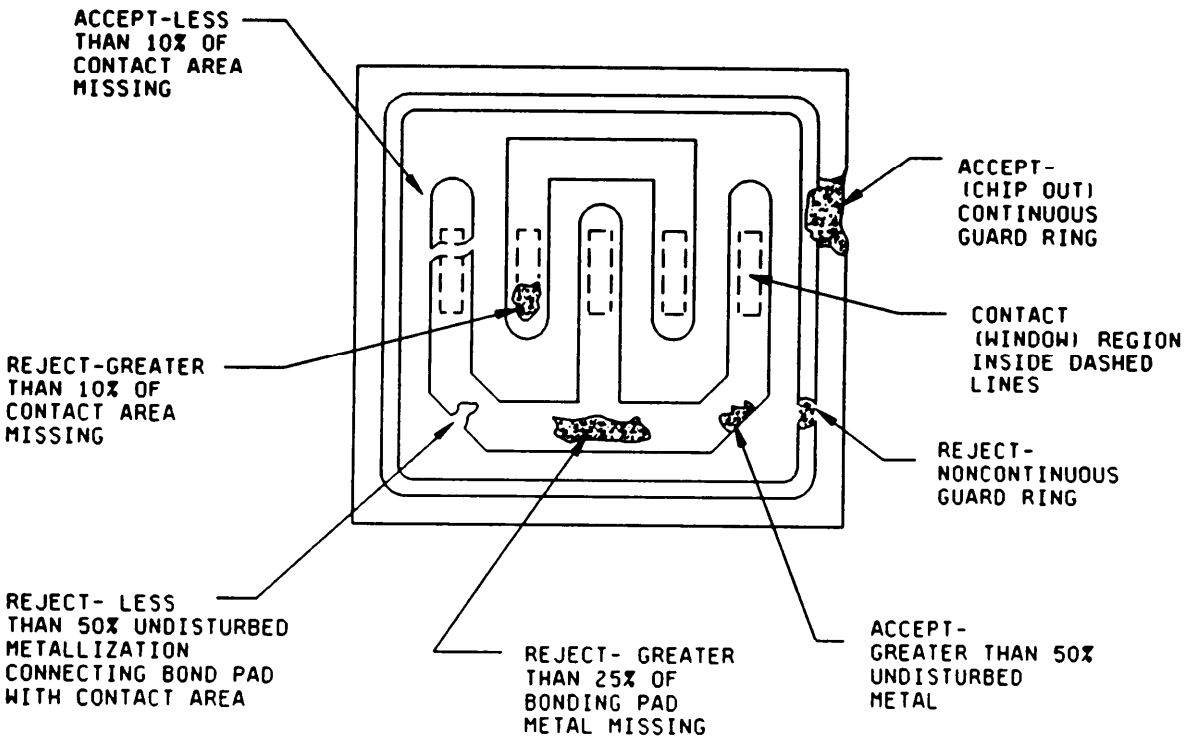

FIGURE 2070-1. Metallization scratches and voids (expanded contact).

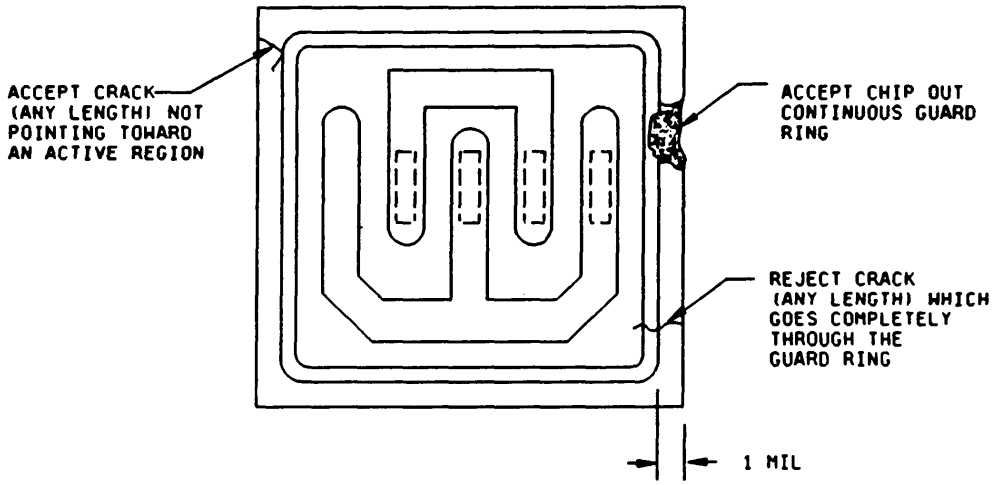

A. Die with guard ring.

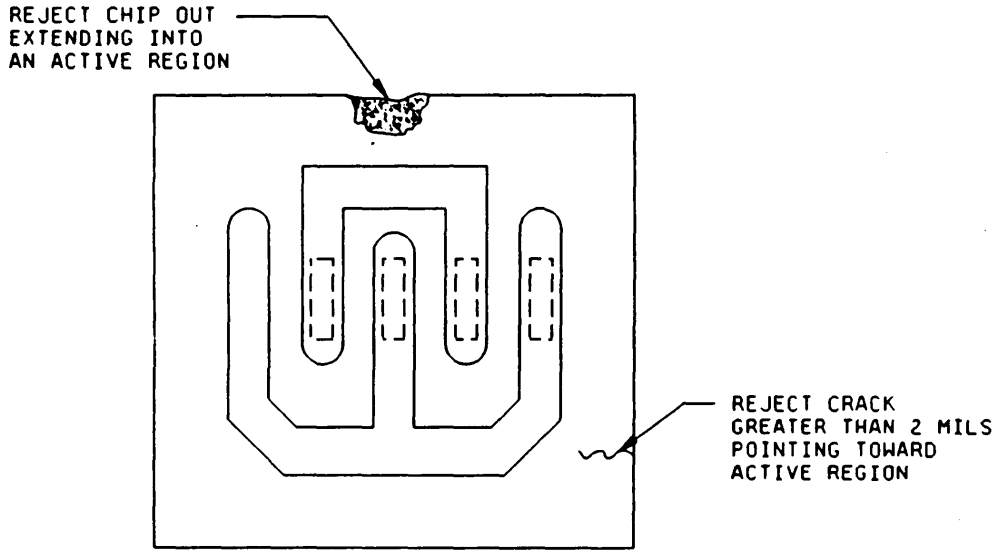

B. Die without guard ring.

FIGURE 2070-2. Cracks and chips.

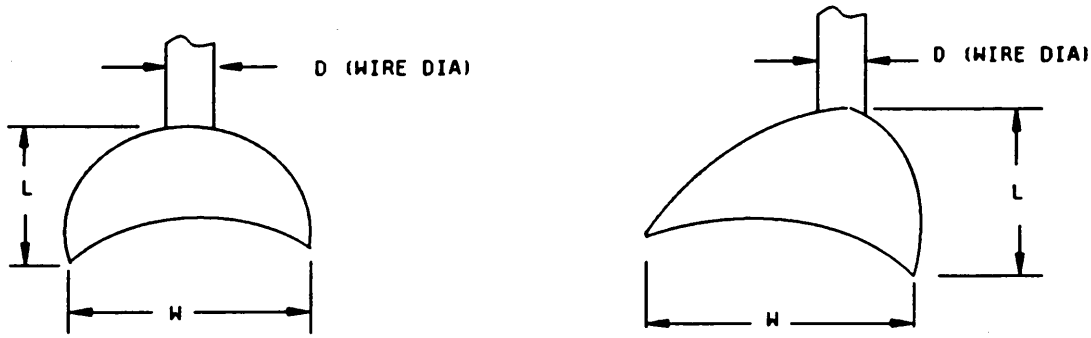

A. Tailless or crescent.

NOTES:
1. 1.2 D ≤ W ≤ 5.0 D (width)
2. 0.5 D ≤ L ≤ 3.0 D (length)

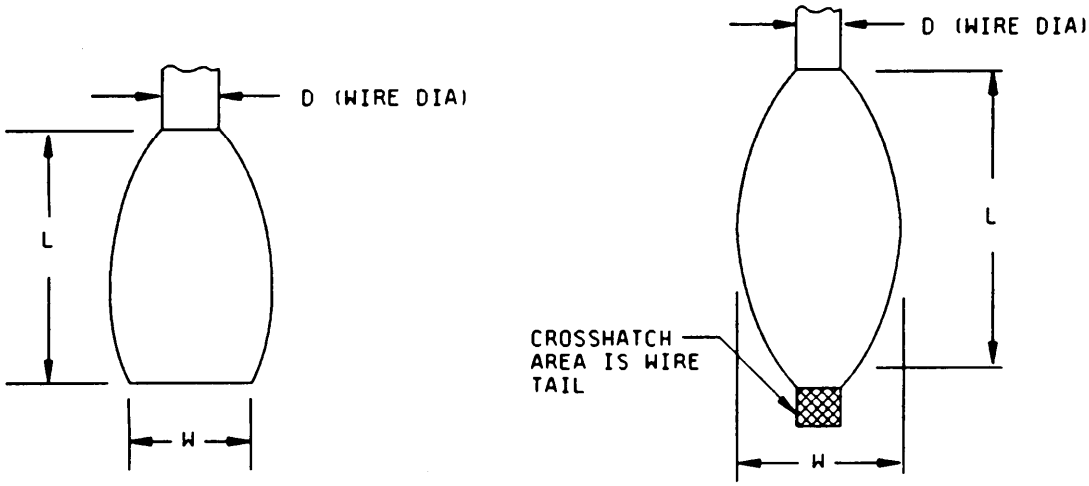

B. Wedge.

Ultrasonic

NOTES:
1. 1.0 D ≤ W ≤ 3.0 D (width)
2. 1.5 D ≤ L ≤ 5.0 D (length)

Thermocompression

NOTES:
1. 1.2 D ≤ W ≤ 3.0 D (width)
2. 1.5 D ≤ L ≤ 5.0 D (length)

FIGURE 2070-3. Bond dimensions.

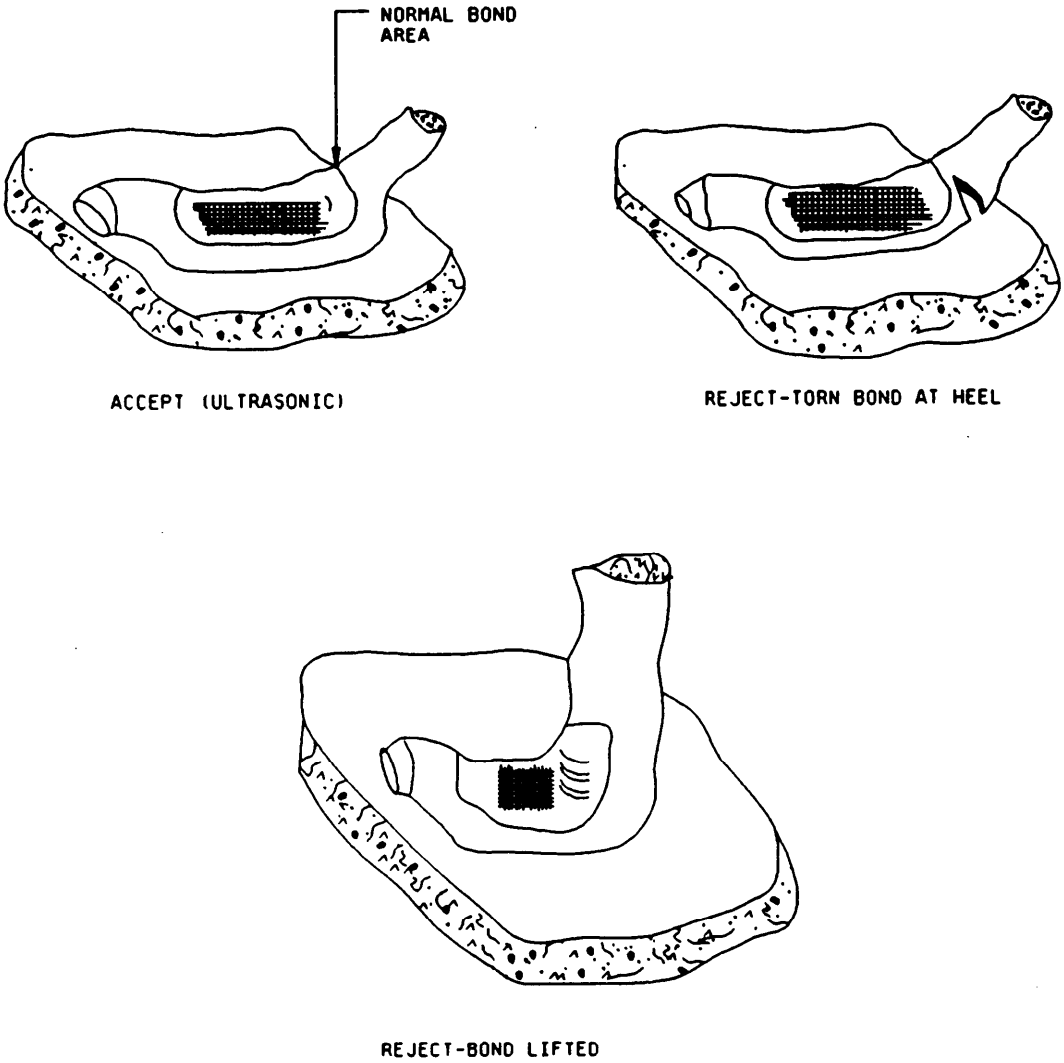

FIGURE 2070-4. Lifted/torn bonds.

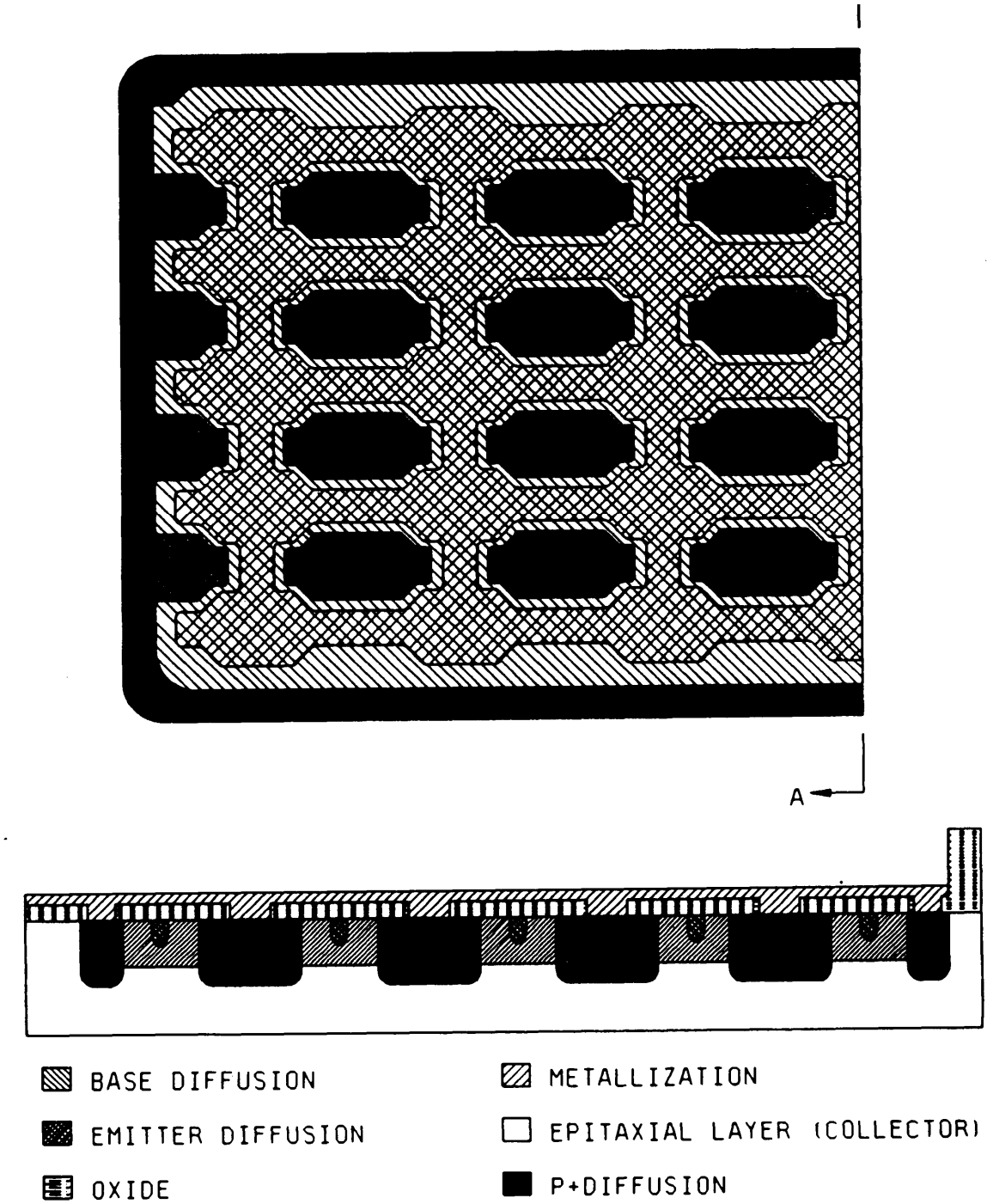

FIGURE 2070-5. Mesh geometry.

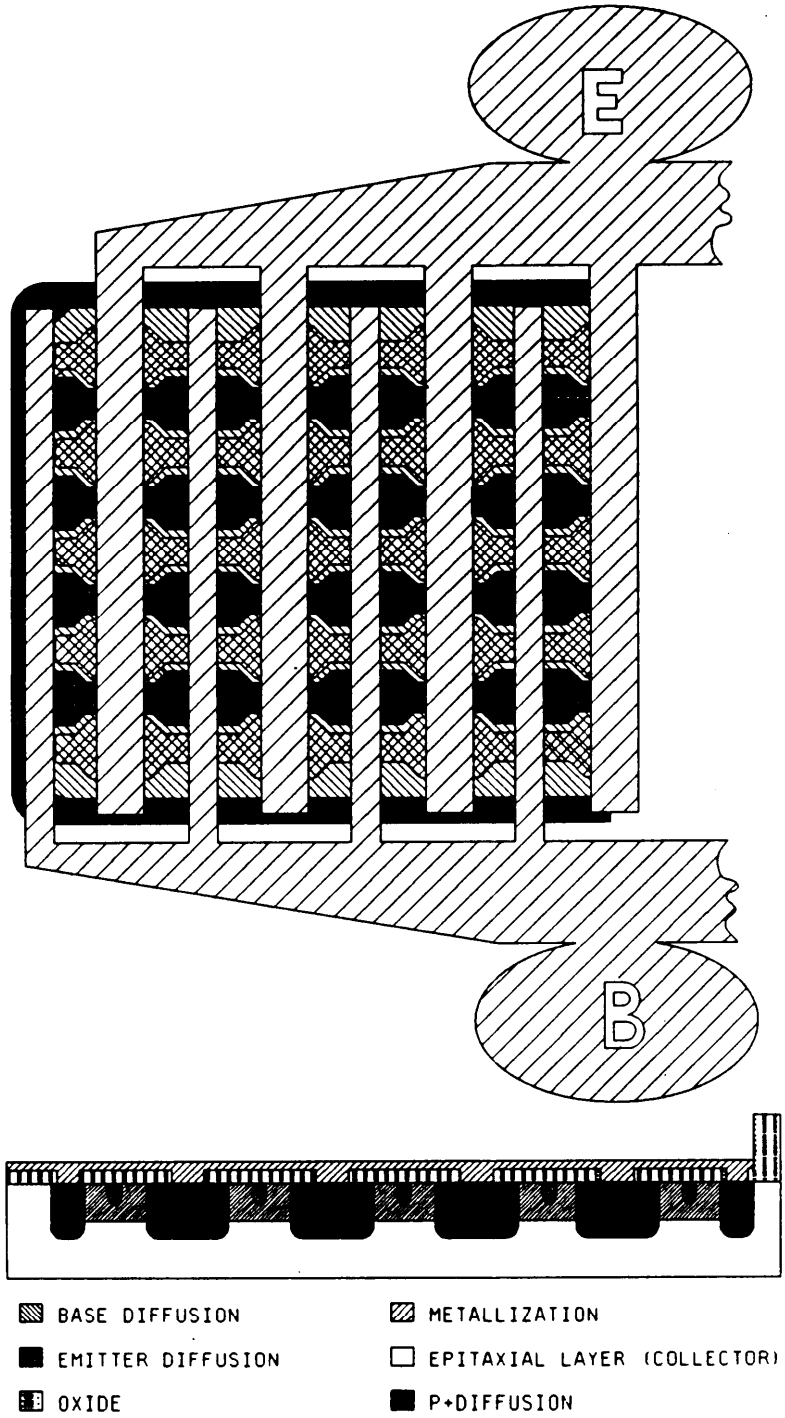

FIGURE 2070-5. Mesh geometry - Continued.

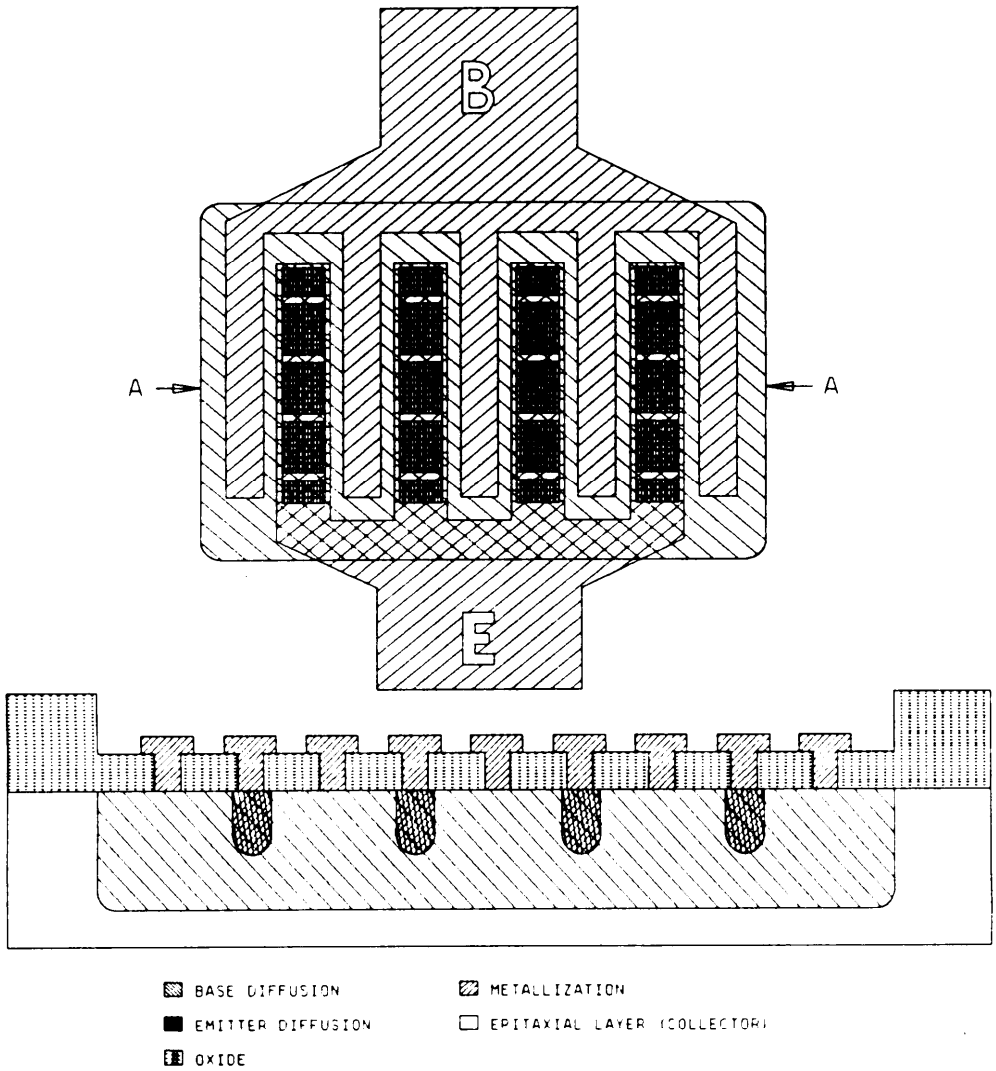

FIGURE 2070-6. Interdigitated geometry.

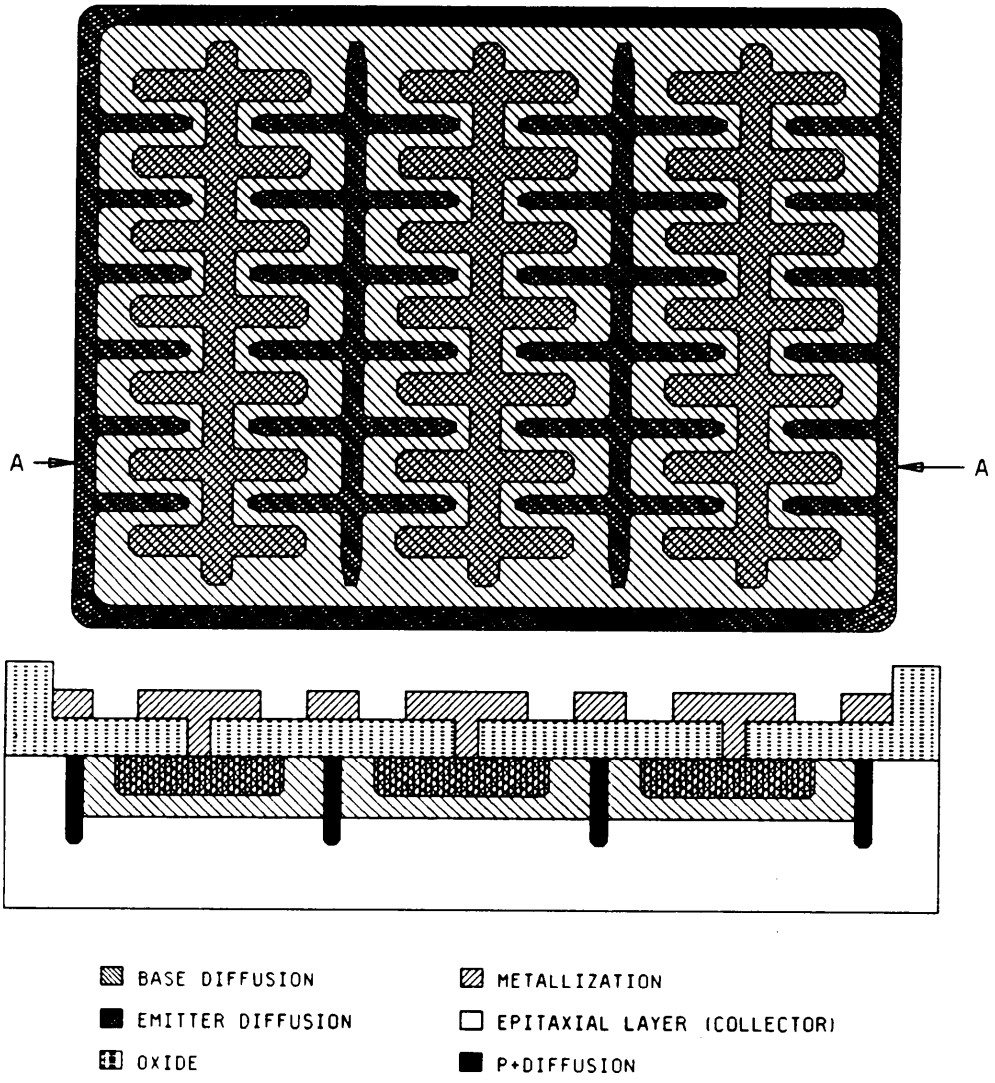

FIGURE 2070-7. Spine geometry.

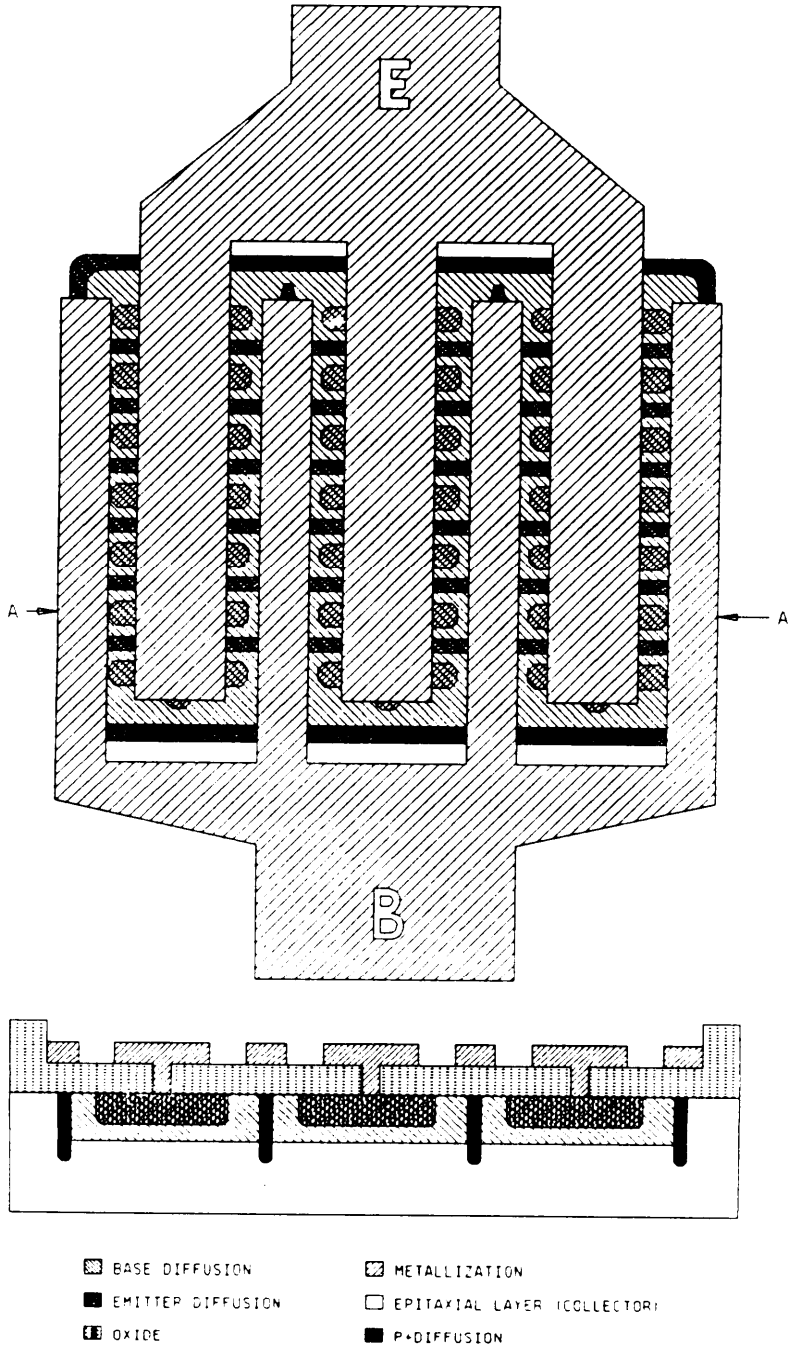

FIGURE 2070-7. Spine geometry - Continued.

METHOD 2071.4

VISUAL AND MECHANICAL EVALUATION

1. Purpose. The purpose of this examination is to verify the workmanship of hermetically packaged devices. This method shall also be utilized to inspect for damage due to handling, assembly, and test of the packaged device. This examination is normally employed at outgoing inspection within the device manufacturers facility, or as an incoming inspection of the assembled device.

2. Apparatus. Apparatus used in this test shall be capable of demonstrating device conformance to the applicable requirements of the individual specification. This includes optical equipment capable of magnification 3x minimum to 10x maximum with a large field of view such as an illuminated ring magnifier.

3. Procedure. Unless otherwise specified, the device shall be examined under a magnification of 3x minimum. The field of view shall be sufficiently large to contain the entire device and allow inspection to the criteria listed in 3.1. Where inspection at a lower magnification reveals an anomaly, then inspection at a higher magnification (1Ox maximum) may be performed to determine acceptability.

When a disposition is in doubt for any dimensional criteria, that dimension may be measured for verification.

3.1 Failure criteria. Devices which exhibit any of the following shall be considered rejects.

3.1.1 Rejects. Device construction (package outline), lead (terminal), identification, markings (content, placement, and legibility), and workmanship not in accordance with the applicable specification shall be rejected. This includes the following:

a. Any misaligment of component parts to the extent that the package outline drawing dimensions are exceeded.

b. Visual evidence of corrosion or contamination. Discoloration is not sufficient cause for rejection. The presence of lead carbonate formations in the form of a white/yellow crystalline shall be considered evidence of contamination.

c. Damaged or bent leads or terminals which precludes their use in the intended application.

d. Defective finish: Evidence of blistering, or evidence of nonadhesion, peeling, or flaking which exposes underplate or base metal.

e. Burrs that will cause lead or terminal dimensions to be exceeded.

f. Foreign material (including solder or other metallization) bridging leads or otherwise interfering with the normal application of the device. Where adherence of foreign material is in question, devices may be subjected to a clean filtered air stream (suction or expulsion) and then reinspected.

g. Protrusions beyond seating plane that will interfere with proper seating of the device.

h. Missing welds or crimps.

i. Damage causing distortion of a flange beyond its normal configuration.

j. Damage to a stud (thread damage or bending) which restricts normal mounting.

k. Dents in metal lids which precludes their use in the intended application.

l. Gaps, separations, or other openings that are not part of the normal design configuration.

m. Tabulation weld: Any fracture or split in the tubulation weld.

n. Weld aligmnent: Base weld mating surfaces not parallel, or that precludes intended use.

3.1.1.1 Failure criteria for lead/terminal seal area of metal can devices.

a. Radial cracks (except meniscus cracks) that extend more than one-half of the distance from the pin to the water mamber (see figure 2071-1). Radial cracks that originate from the outer member.

b. Circumferential cracks (except meniscus cracks) that extend more than 90 degrees around the seal center (see figure 2071-2).

c. Open surface bubble(s) in strings or clusters that exceed two-thirds of the distance between the lead and the package wall.

d. Visible subsurface bubbles that exceed the following:

(1) Large bubbles or voids that exceed one-third of the glass sealing area (see figure 2071-3).

(2) Single bubble or void that is larger than two-thirds of the distance between the lead and the package wall at the site of the inclusion and extends more than one-third of the glass seal depth (see figure 2071-4).

(3) Two bubbles in a line totaling more than two-thirds of the distance from pin to case (see figure 2071-5).

(4) Interconnecting bubbles greater than two-thirds of the distance between pin and case (see figure 2071-6).

e. Except as designed, reentrant seals which exhibit non-uniform wicking or negative wicking.

f. Twenty-five percent or greater of the radius length from the center of the feedthrough to the edge of the glass eyelet.

g. Glass meniscus cracks that are not located within one-half of the distance between the lead to the case (see figure 2071-7). The glass meniscus is defined as that area of glass that wicks up the lead or terminal.

h. Any chip-out of ceramic or sealing glass that penetrates the sealing glass deeper than the glass meniscus plane. Exposed base metal as a result of meniscus chip outs are acceptable if the exposed area is no deeper than 0.010 inch (0.25 mm) or 50 percent of lead diameter, whichever is greater (see figure 2071-8).

3.1.1.2 Failure criteria for ceramic packages. Failure criteria for ceramic packages (see MIL-STD-883, method 2009).

3.1.1.3 Failure criteria for opaque glass body devices. Failure criteria for opaque glass body devices (see method 2068 of MIL-STD-750).

3.1.1.4 Meniscus cracks. Meniscus cracks in axial leaded glass packages are not cause for rejection.

4. Summary. The following details shall be specified in the applicable acquisition document:

a. Requirements for markings and the lead (terminal) or pin identification.

b. Detailed requirements for materials, design, construction, and workmanship.

c. Magnification requirements, if other than specified.

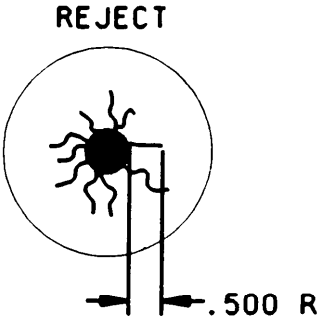

FIGURE 2071-1. Radial cracks extending more than one-half the distance from pin to outer member.

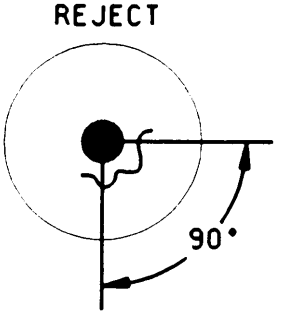

FIGURE 2071-2. Circumferential cracks.

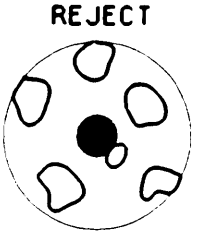

FIGURE 2071-3. Bubbles in glass exceeding one-third of the sealing area.

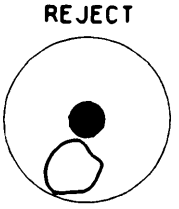

FIGURE 2071-4. Single bubble or void.

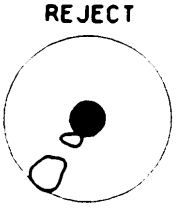

FIGURE 2071-5. Two bubbles in a line.

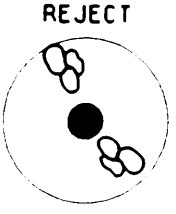

FIGURE 2071-6. Interconnecting bubbles.

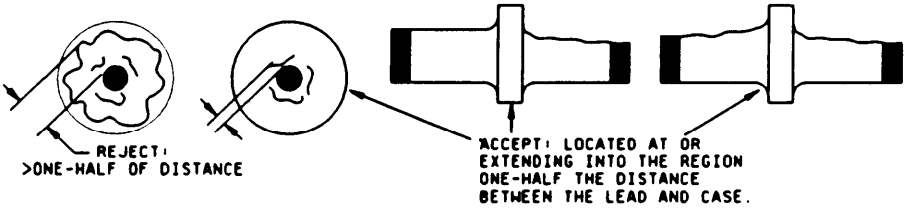

FIGURE 2071-7. Meniscus cracks.

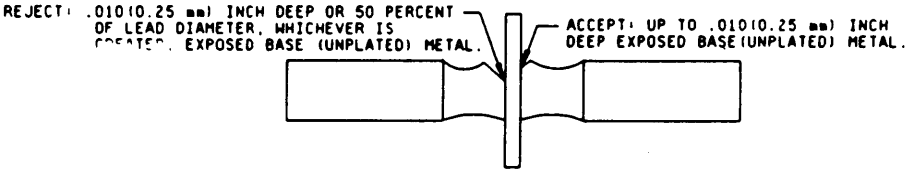

FIGURE 2071-8. Chip outs.

METHOD 2072.5

INTERNAL VISUAL TRANSISTOR (PRE-CAP) INSPECTION

1. Purpose. The purpose of this inspection is to verify the construction and workmanship of bipolar transistors, field effect transistors (FET), discrete monolithic, multichip, and multifunction devices excluding microwave and selected RF devices. This test will be performed prior to capping or encapsulation to detect those devices with internal defects that could lead to failures in normal application and verify compliance with the requirements of the applicable detail specification.

2. Apparatus. The apparatus for this inspection shall consist of the following:

a. Optical equipment capable of the specified magnifications.

b. Light sources of sufficient intensity to adequately illuminate the devices being inspected.

c. Adequate fixturing for handling the devices being inspected without causing damage.

d. Adequate covered storage and transportation containers to protect devices from mechanical damage and environmental contamination.

e. Any visual standards (drawings and photographs) necessary to enable the inspector to make objective decisions as to the acceptability of the devices being examined.

3. Definitions.

3.1 Glassivation. The top layer of transparent insulating material that covers the active circuit area metallization, but excluding bonding pads.

3.2 Passivation. Silicon oxide, nitride, or other insulating material that is grown or deposited directly on the die prior to the deposition of any metal.

4. Procedure.

4.1 General. The device shall be examined in a suitable sequence of observations within the specified magnification range to determine compliance with the requirements of the applicable detail specification and the criteria of the specified test condition. If a specified visual inspection requirement is in conflict with the topology or construction of a specific device design, alternate inspection criteria may be included in the detail specification. Any alternate inspection criteria contained in the detail specification shall take precedence over the criteria of this test method. Any criteria of this test method intended for a specific device process or technology has been indicated. Where applicable, unused cells shall not be subjected to internal visual criteria.

a. Sequence of inspection. The order in which criteria are presented is not a required order of examination and may be varied at the discretion of the manufacturer. Visual criteria specified in 4.1.1, 4.1.2, 4.1.3, and 4.1.7, may be examined prior to die attachment with reexamination at low or high magnification after die attachment for these criteria. Visual criteria specified in 4.1.6.2 and 4.1.6.3 may be examined prior to lead wire bonding without reexamination after bonding.

b. Inspection control. Within the time interval between visual inspection and preparation for sealing, devices shall be stored in a controlled environment (one which controls airborne particle count and relative humidity). The use of an inert gas environment, such as dry nitrogen shall satisfy the requirements for storing in a controlled environment. Devices examined in accordance with this test method shall be inspected and stored in a class 100,000 environment, in accordance with FED-STD-209, except that the maximum allowable relative humidity shall not exceed 65 percent.

If devices are subjected to a high temperature bake (>+100°C) immediately prior to sealing, the humidity control is not required. Unless a cleaning operation is performed prior to sealing, devices shall be in covered containers when transferred from one controlled environment to another.

c. Magnification. High magnification inspection shall be performed perpendicular to the die surface with normal incident illumination. Low magnification inspection shall be performed with either a monocular, binocular, or stereo microscope, and the inspection performed within any appropriate angle, with the device under suitable illumination. The inspection criteria of 4.1.4 and 4.1.6.1 may be examined at "high magnification" at the manufacturer's option. High power magnification may be used to verify a discrepancy noted at a low power.

TABLE 2072.1. Die magnification requirements.

Chip size 1/	High magnification	Low magnification
30 mils or less	100X to 200X	30X to 50X
31 to 60 mils	75X to 150X	30X to 50X
61 to 150 mils	35X to 120X	10X to 30X
Greater than 150 mils	25X to 75X	10X to 30X

1/ Length of shortest dimension.

d. Reinspection. Unless a specific magnification is required by the detail specification, when inspection for product acceptance or quality verification of the visual requirements herein is conducted subsequent to the manufacturer's successful inspection, the additional inspection may be performed at any magnification specified herein. If sampling is used rather than 100 percent reinspection, reevaluation of lot quality in accordance with the "Reevaluation of lot quality" of MIL-S-19500 shall be used.

e. Exclusions. If conditional exclusions have been allowed, specific instruction as to the location and conditions for which the exclusion can be applied shall be documented in the assembly inspection drawing.

4.1.1 Die metallization defects (high magnification). A die which exhibits any of the following defects shall be rejected.

4.1.1.1 Metallization, scratches, and voids exposing underlying material (see figure 2072-1).

a. A scratch or void that severs the innermost metallized guard ring.

b. Any die containing a void in the metallization at the bonding pad covering more than 25 percent of the pad area.

c. For devices with nonexpanded contacts and all power devices. Any scratch or void which isolates more than 25 percent of the total metallization of an active region from the bonding pad.

d. For all devices with expanded contacts. A scratch or void, whether or not underlying material is exposed, which leaves less than 50 percent undisturbed metal width in the metal connecting the pad and contact regions.

e. For expanded contacts with more than 10 contact regions. A scratch or void extending across more than 50 percent of the first half of any contact region (beginning at the bonding area) in more than 10 percent of the contact regions.

f. For expanded contacts with less than 10 contact regions. A scratch or void in the contact area which isolates more than 10 percent of the metallized area from the bonding pad.

4.1.1.2 Metallization corrosion. Any metallization which shows evidence of corrosion.

4.1.1.3 Metallization adherence. Any metallization which has lifted, peeled, or blistered.

4.1.1.4 Metallization probing. Criteria contained in 4.1.1.1 shall apply as limitations on probing damage.

4.1.1.5 Metallization bridging. Metallization bridging between two normally unconnected metallization paths which reduces the separation, such that a line of oxide is not visible (no less than 0.1 mil) when viewed at the prescribed high magnification.

4.1.1.6 Metallization alignment.

a. Except by design, contact window that has less than 50 percent of its area covered by continuous metallization.

b. A metallization path not intended to cover a contact window which is separated from the window by less than 0.1 mil.

c. Except by design, any misalignment to the extent that continuous passivation color cannot be seen (i.e., metallization crossing passivation).

4.1.2 Passivation and diffusion faults (high magnification). A device which exhibits any of the following defects (see figure 2072-2) shall be rejected:

a. Any diffusion fault that allows bridging between any two diffused areas, any two metallization strips, or any such combination not intended by design.

b. Any passivation fault including pinholes not covered by glassivation that exposes semiconductor material and allows bridging between any two diffused areas, any two metallization strips, or any such combination not intended by design.

c. Unless intended by design, a diffusion area which is discontinuous.

d. Except by design, an absence of passivation visible at the edge and continuing under the metallization causing an apparent short between the metal and the underlying material (closely spaced double or triple lines on the edges of the defect indicate that it may have sufficient depth to penetrate down to the silicon).

e. Except by design, any active junction not covered by passivation or glassivation.

f. Unless by design, a contact window in a diffused area which extends across a junction.

4.1.3 Scribing and die defects (high magnification). A device which exhibits any of the following defects (see figure 2072-3) shall be rejected:

a. Unless by design, less than 0.1 mil passivation visible between active metallization or bond pad periphery and the edge of the die.

b. Any chip-out or crack in the active area.

c. Except by design, die having attached portions of the active area of another die and which exceeds 10 percent of the. area of the second die.

d. Any crack which exceeds 2.0 mils in length inside the scribe grid or scribe line that points toward active metallizatlon or active area and extends into the oxide area.

e. Any chip-out that extends to within 1 mil of a junction.

f. Any crack or chip-out that extends under any active metallization area.

g. Any chip-out which extends completely through the guard ring.

4.1.4 Bond inspection (low magnification). This inspection and criteria shall be the required inspection for the bond type(s) and location(s) to which they are applicable when viewed from above (see figures 2072-4 and 2072-5). Wire tail is not considered part of the bond when determining physical bond dimensions. A device which exhibits any of the following defects shall be rejected.

4.1.4.1 Gold ball bonds.

a. Gold ball bonds on the die or package post where the ball bond diameter is less than 2.0 times or greater than 5.0 times the wire diameter.

b. Gold ball bonds where the wire exit is not completely within the periphery of the ball.

c. Gold ball bonds where the existing wire is not within the boundaries of the bonding pad.

d. Any visible intermetallic formation at the periphery of any gold ball bond.

4.1.4.2 Wedge bonds.

a. Ultrasonic wedge bonds on the die or package post that are less than 1.2 times or greater than 3.0 times the wire diameter in width, or are less than 1.5 times or greater than 5.0 times the wire diameter in length.

b. Thermocompression wedge bonds on the die or package post that are less than 1.2 times or greater than 3.0 times the wire diameter in width or are less than 1.5 or greater than 5.0 times the wire diameter in length.

4.1.4.3 Tailless bonds (crescent).

a. Tailless bonds on the die or package post that are less than 1.2 times or greater than 5.0 times the wire diameter in width, or are less than 0.5 times or greater than 3.0 times the wire diameter in length.

b. Tailless bonds where the bond impression does not cover the entire width of the wire.

4.1.4.4 General (gold ball, wedge, and tailless). As viewed from above, a device which exhibits any of the following defects shall be rejected:

a. Bonds on the die where less than 75 percent of the bond is within the unglassivated bonding pad area (except where due to geometry, the bonding pad is smaller than the bond, the criteria shall be 50 percent).

b. Wire bond tails that extend over and make contact with any metallization not covered by glassivation and not connected to the wire.

c. Wire bond tails that exceed two wire diameters in length at the bonding pad or four wire diameters in length at the package post.

d. Bonds on the package post that are not bonded entirely on the flat surface of the post top.

e. A bond on top of another bond.

f. Bonds placed so that the separation between bonds and adjacent unglassivated die metallization is less than 1.0 mil.

g. Bonds placed so that the separation between bonds and adjacent glassivated die metallization is less than 0.25 mil.

h. Bonds placed so that the separation between adjacent bonds is less than 0.25 mil. This criteria does not apply to designs which employ multiple bond wires in place of a single wire.

i. Bonds located where any of the bond is placed on an area containing die preform mounting material.

j. Repair on conductors by bridging or addition of bonding wire or ribbon.

k. For aluminum wires over 2.0 mils diameter, the bond width shall not be less than 1.0 times the wire diameter.

4.1.5 Internal lead wires (low magnification). This inspection and criteria shall be required inspection for the Location(s) to which they are applicable when viewed from above. A device which exhibits any of the following defects shall be rejected:

a. Any wire that comes closer than two wire diameters or 5 mils, whichever is less, to unglassivated operating metallization, another wire (common wires and pigtails excluded) package post, unpassivated die area, or any portion of the package, including the plane of the lid to be attached. (Within a 5.0 miL spherical radial distance from the perimeter of the bond on the die surface, the separation can be 1.0 mil.)

b. Nicks, tears, bonds, cuts, crimps, scoring, or neckdown in any wire that reduces the wire diameter by more than 25 percent.

c. Missing or extra lead wires.

d. Bond lifting or tearing at interface of pad and wire (see figure 2072-5).

e. Any wire which runs from die bonding pad to package post and has *no* arc or stress relief.

f, Except in common connectors, wires which cross other wires.

g. Wire(s) not in accordance with bonding diagram.

h. Wire is kinked (unintended sharp bend) with an interior angle of less than 90° or twisted to an extent that stress marks appear.

i. Wire (ball bonded devices) not within 10° of the perpendicular to the surface of the chip for a distance of greater than 0.5 mil before bending toward the package post or other termination point.

j. Excessive lead burn at lead post weld.

k. Pigtail longer than 50 percent of post diameter.

l. A bow or loop between double bonds at post greater than four times wire diameter.

m. Excessive loops, bows, or sags in any wire such that it could short to another wire, to another pad, to another package post, to the die or touch any portion of the package.

n. When clips are used, solder fillets shall encompass at least 50 percent of the clip-to-die and post-to-clip periphery. There shall be no deformation or plating defects on the clip.

4.1.6 Package condition: (magnification as indicated). A device which exhibits any of the following defects shall be rejected.

4.1.6.1 Conductive foreign material on die surface. All foreign material or particles may be blown off with a nominal gas blow (approximately 20 psi (138 kPa)) or removed with a soft camel hair brush. The device shall then be inspected for the following criteria (low magnification):

a. Loosely attached foreign particles (conductive particles which are attached by less than one-half of their largest dimension) which are present on the surface of the die that are large enough to bridge the narrowest unglassivated active metal spacing (silicon chips shall be included as conductive particles).

b. Embedded foreign particles on the die that bridge two or more metallization paths or semiconductor junctions, or any combination of metallization or junction.

c. Liquid droplets, chemical stains, or photoresist on the die surface that bridge any combinations of unglassivated metal or bare silicon areas.

d. Except for unused cells, ink on the surface of the die that covers more than 25 percent of a bonding pad area or that bridges any combination of unglassivated metallization or bare silicon areas.

4.1.6.2 Die mounting (low magnification).

a. Die mounting material buildup that extends onto the top surface of the die or extends vertically above the top surface of the die and interferes with bonding.

b. Die to header mounting material which is not visible around at least three complete sides or 75 percent of the die perimeter. Wetting criteria is not required if the devices pass an approved electrical die attach evaluation test.

c. Any flaking of the die mounting material.

d. Any balling of the die mounting material which does not exhibit a fillet when viewed from above.

4.1.6.3 Die orientation.

a. Die is not located or orientated in accordance with the applicable assembly drawing of the device.

b. Die is visibly tipped or tilted (more than 10°) with respect to the die attach surface.

4.1.6.4 Internal package defects (low magnification inspection) (applicable to headers, bases, caps, and lids). As an alternative to 100 percent visual inspection of lids and caps in accordance with the criteria of 4.1.6.1a, the lids or caps may be subjected to a suitable cleaning process and quality verification procedure approved by the qualifying activity, provided the lids or caps are subsequently held in a controlled environment until capping or preparation for seal.

a. Any header or post plating which is blistered, flaked, cracked, or any combination thereof.

b. Any conductive particle which is attached by less than one-half of the longest dimension.

c. A bubble or a series of interconnecting bubbles in the glass surrounding the pins which are more than one-half the distance between the pin and body or pin-to-pin.

d. Header posts which are severely bent.

e. Any glass, die, or other material greater than 1.0 mil in its major dimension which adheres to the flange or side of the header and would impair sealing.

f. Any stain, varnish, or header discoloration which appears to extend under a die bond or wire bond.

g. For isolated stud packages:

(1) Any defect or abnormality causing the designed isolating paths between the metal island to be reduced to less than 50 percent of the design separation.

(2) A crack or chip-out in the substrate.

4.1.7 Glassivation and silicon nitride defects (high magnification). No device shall be acceptable that exhibits any of the following defects:

a. Glass crazing that prohibits the detection of visual criteria contained herein.

b. Any glassivation which has delaminated. (Lifting or peeling of the glassivation may be excluded from the criteria above, when it does not extend more than 1.0 mil distance from the designed periphery of the glassivation, provided that the only exposure of metal is adjacent to bond pads or of metallization leading from those pads.)

c. Except by design, two or more adjacent active metallization paths which are not covered by glassivation.

d. Unglassivated areas at the edge of bonding pad which expose silicon.

e. Glassivation which covers more than 25 percent of the design bonding pad area.

4.2 Post organic protective coating visual inspection. If devices are to be coated with an organic protective coating the devices shall be visually examined in accordance with the criteria specified in 4.1 prior to application of the coating. After the application and cure of the organic protective coating the devices shall be visually examined under a minimum of 10x magnification. Devices which exhibit any of the following defects shall be rejected:

a. Except by design, any unglassivated or unpassivated areas or insulating substrate which has incomplete coverage.

b. Open bubbles, cracks or voids in the organic protective coating.

c. A bubble or a chain of bubbles which covers two adjacent metallized surfaces.

d. Organic protective coating which has flaked or peeled,

e. Organic protective coating which is tacky.

f. Conductive particles which are embedded in the coating and are large enough to bridge the narrowest unglassivated active metal spacing (silicon chips shall be included as conductive particles).

g. A web of varnish (organic protective coating) that connects the wire with the header.

5. Summary. The following conditions shall be specified in the applicable detail specification:

a. Test conditions, exceptions, or additions to the test method.

b. Where applicable, any conflicts with approved circuit design topology or construction.

c. Where applicable, gauges, drawings, and photographs that are to be used as standards for operator comparison.

d. When applicable, specific magnification.

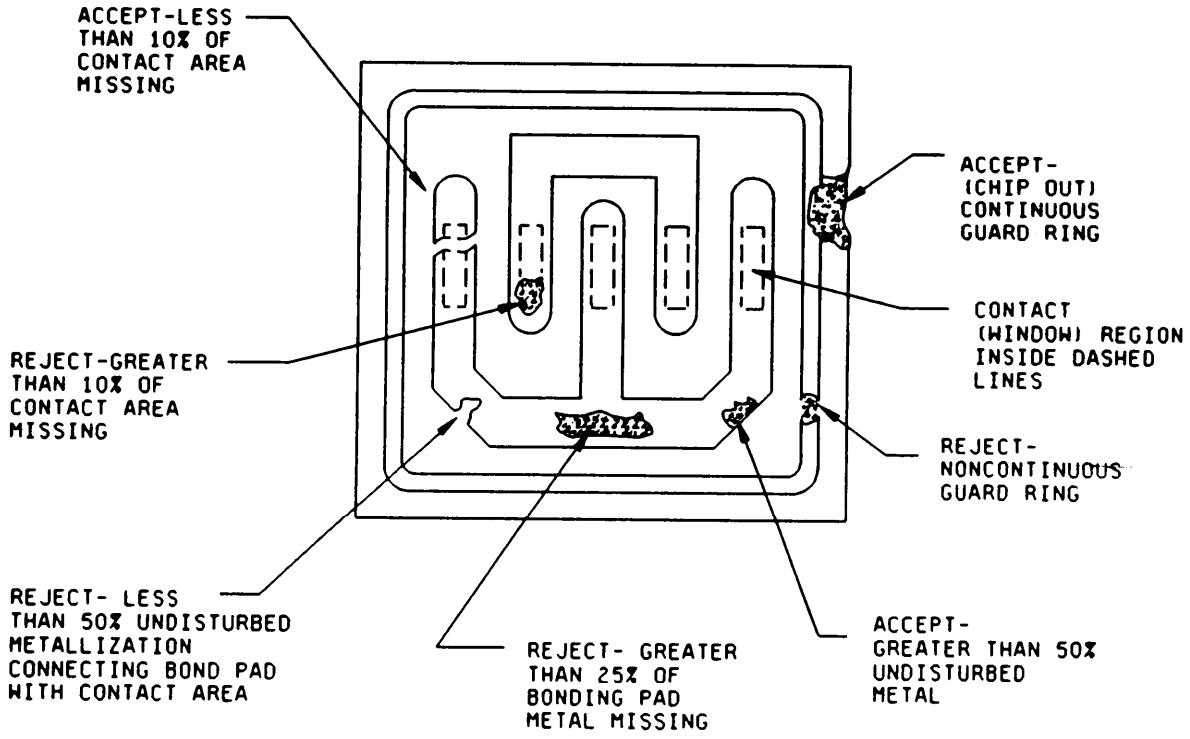

FIGURE 2072.1. Metallization scratches and voids (expanded contact).

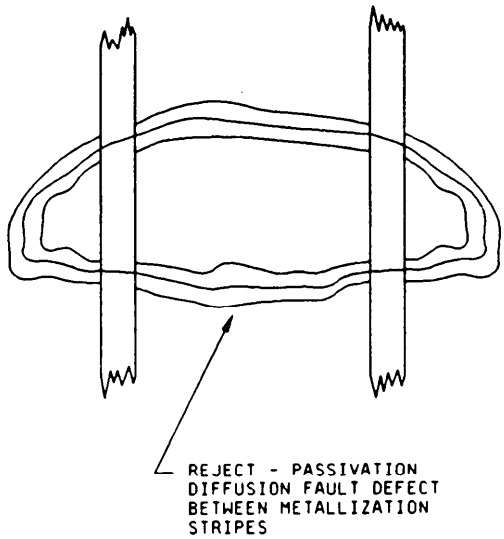

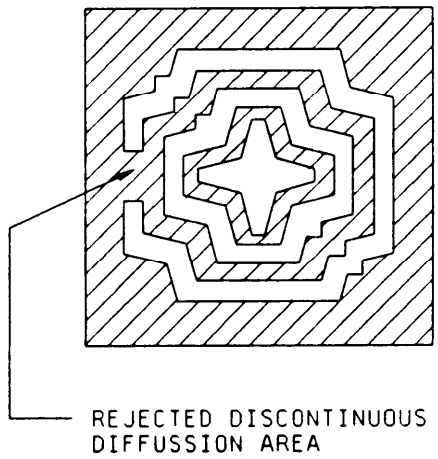

FIGURE 2072.2. Passivation and diffusion faults.

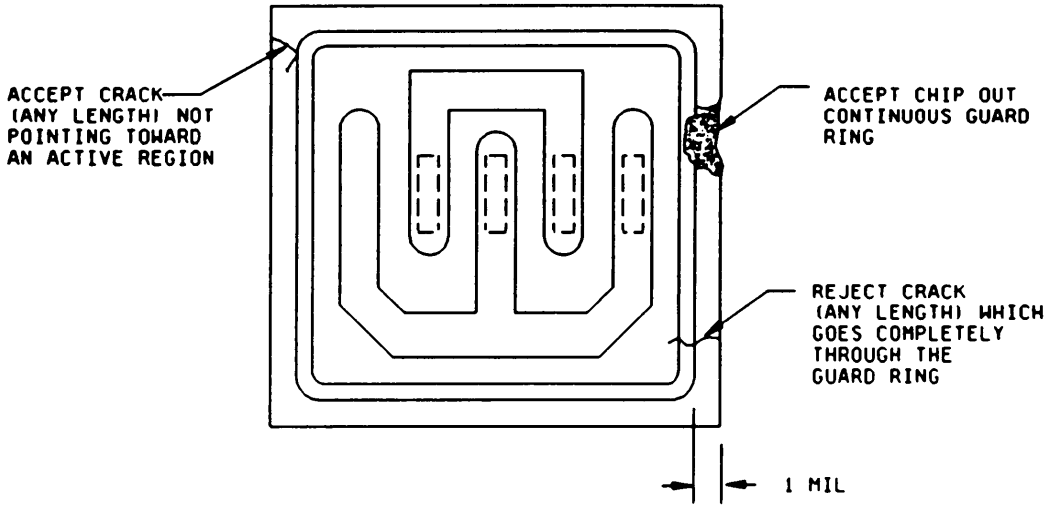

A. Die with guard ring.

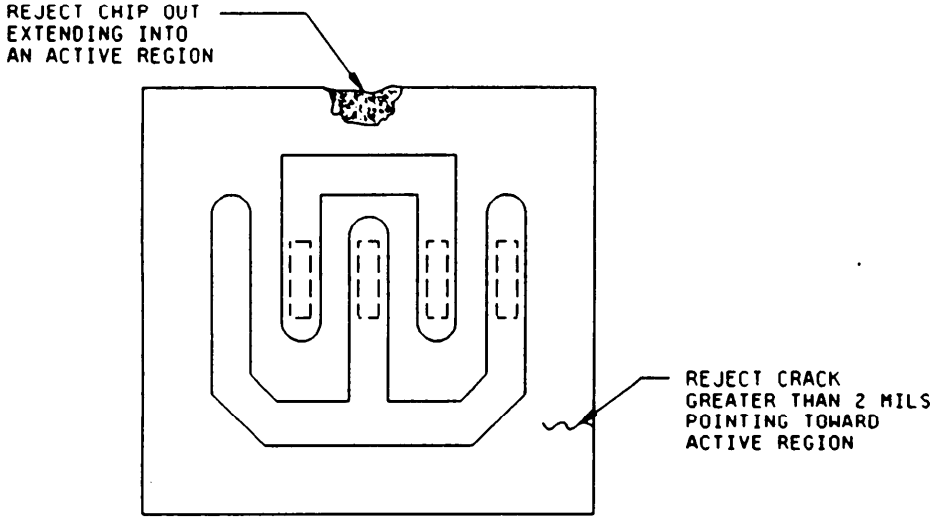

B. Die without guard ring.

FIGURE 2072.3. Cracks and chips.

A. Tailless or crescent.

NOTES:
1. 1.2.D ≤ W ≤ 5.0 D (width).
2. 0.5 D ≤ L ≤ 3.0 D (length).

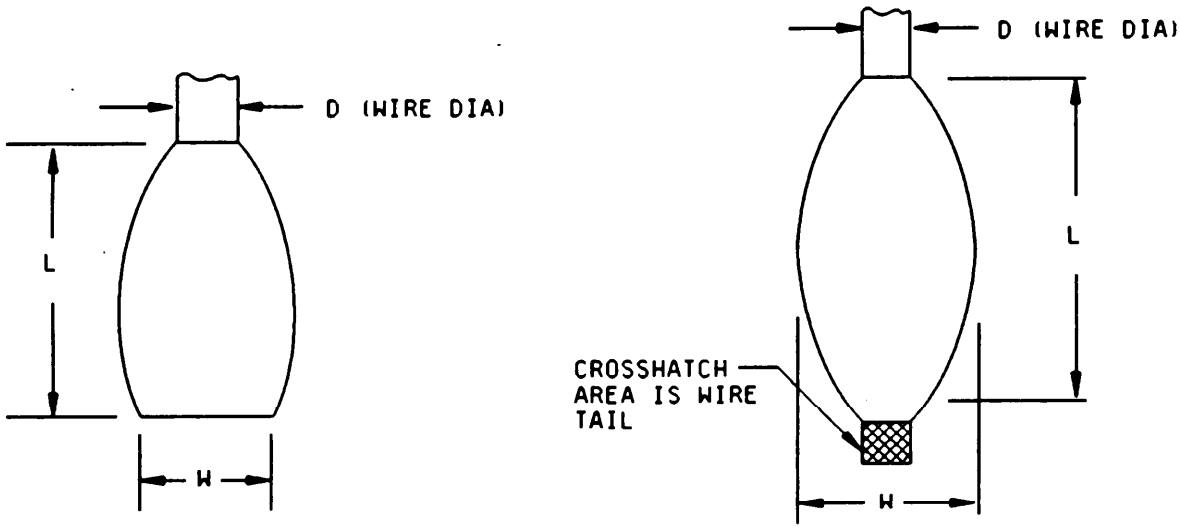

B. Wedge.

Ultrasonic

NOTES:
1. 1.2 D ≤ W ≤ 3.0 D (width).
2. 1.5 D ≤ L ≤ 5.0 D (length).

Thermocompression

NOTES:
1. 1.2 D ≤ W ≤ 3.0 D (width).
2. 1.5 D ≤ L ≤ 5.0 D (length).

FIGURE 2072.4. Bond dimensions.

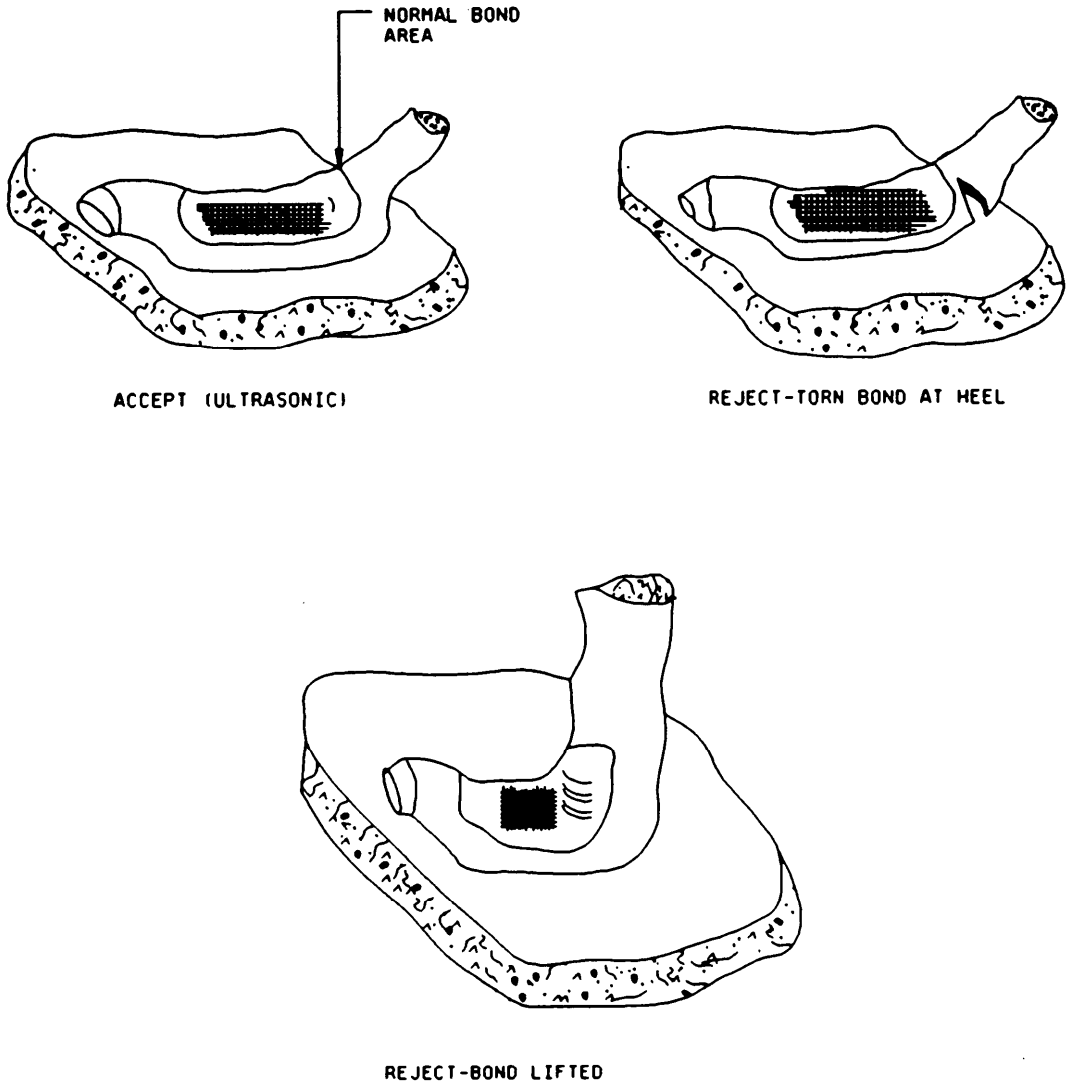

FIGURE 2072.5. Lift/torn bonds.

METHOD 2073

VISUAL INSPECTION FOR DIE (SEMICONDUCTOR DIODE)

1. Purpose. The purpose of this test is to check the quality and workmanship of semiconductor die for compliance with the requirements of the individual specification. All tests shall be performed to detect and eliminate those die with defects that could lead to device failures. This test will normally be used prior to installation on a 100 percent inspection basis. The test may also be employed on a sampling basis prior to encapsulation to determine the effectiveness of the manufacturer's quality control and handling procedures.

2. Definitions. The following definitions shall apply:

a. Active area: Any area where electrical contact may be made on the "N" or "P" regions of the die.

b. Foreign material (attached): Any conductive or nonconductive material that cannot be removed by a nominal gas glow (approximately 20 psi (138 kPa)). Conductive foreign material is defined as any substance that appears opaque under those conditions of lighting and magnification used in routine visual inspections.

c. Junction: The boundary between "P" and "N" type semiconductor material.

d. Passivation: Silicon oxide, silicon nitride, or other insulating material that is grown or deposited directly over the "P-N" junction.

3. Apparatus.

a. The apparatus for this test shall include optical equipment and any visual standards (e.g., gauges, drawings, photographs) necessary to perform an effective examination and enable the operator to make objective decisions on the acceptability of the die being examined. Adequate fixturing shall be provided for handling die without damage during examination.

b. Unless otherwise specified, magnification at 20x and 30x minimum shall be performed with a monocular, binocular, or stereo microscope. The inspection shall be performed under suitable illumination.

4. Procedure. The die shall be examined in a suitable sequence of operations and at the specified magnifications to determine compliance with the requirements of the individual specification and the criteria of the specified test conditions. The sequence of examinations required may be varied at the discretion of the manufacturer.

4.1 Die inspections. These inspections shall apply to alloy, diffused mesa, epitaxial mesa, planar, and epitaxial planar construction techniques. Unless otherwise specified, inspections shall be made on a random selection of at least one side of each die being inspected. If a lot fails, 100 percent inspection of the total lot shall be performed.

4.1.1 Chip-outs, cracks, and scribe line defects.

4.1.1.1 Mesa die (see figure 2073-1). Chip-outs, cracks, and scribe lines shall. be a minimum of 1 mil from the junction for peak inverse voltages of less than 300 volts, and 2.0 mils from the junction for voltages greater than 300 volts.

4.1.1.2 Passivated planar die (see figure 2073-2). No chip-outs, cracks, or scribe lines shall touch or extend through the inner edges of the guard ring.

4.1.2 Passivation defects (see figures 2073-1 through 2073-4).

4.1.2.1 Mesa construction. There shall be no pits or voids within 1 mil from the junction. Cracks shall not extend within 1 mil of the junction.

4.1.2.2 Planar construction with diffused guard ring. Devices shall be rejected for cracks in the passivation material that touch or extend through the inner edge of the guard ring, five or more bubbles, pits, or voids greater than 1 mil in diameter within the area bounded by the inner edge of the guard ring, or complete absence of passivation on the die.

4.1.2.3 Planar construction without diffused guard ring. Device shall be rejected for total absence of passivation; or chips, cracks, or scribe lines which contact or extend into the metallized region or any pits or voids within 1 mil of the junction.

4.1.3 Topside contact defects (see figures 2073-1 and 2073-2).

4.1.3.1 Planar construction with diffused guard ring. Devices shall be rejected if >25 percent of the design contact area is missing. Any contact that extends beyond the guard rings shall be cause for rejection.

4.1.3.2 Mesa die. A device shall be rejected if any contact extends over the junction or if more than 25 percent of the contact area is missing.

4.1.4 Die size defects. Any die having 75 percent or less of its original area, 25 percent or more of the area of the adjacent die, or any portion of the adjacent die on which the guard ring or topside contact metallization is visible even if less than 25 percent of adjacent die, shall be cause for rejection.

4.1.5 Plating defects. A die shall be rejected if 25 percent or more of the area plating is peeled or missing from either top or back side.

4.1.6 Foreign material defects. Any attached foreign matter on the surface of the die greater than 1 mil in any dimension shall be cause for rejection.

5. Summary. The following conditions shall be specified in the detail specification:

a. Die inspection sampling plan (see 4.1).

b. Specific magnification, where applicable (see 3.).

c. Gauges, drawings, and photographs that are to be used as standards for operator comparison, where applicable (see 3.).

PASSIVATED MESA

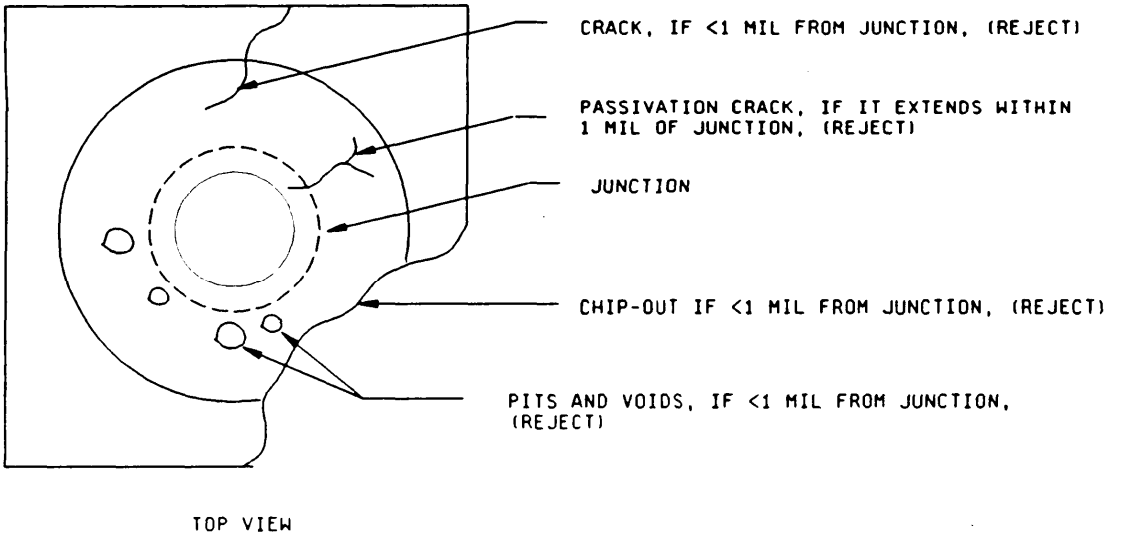

NOTE: For peak inverse voltages of 300 V or more, the rejection criteria shall be 2 mils from the junction.

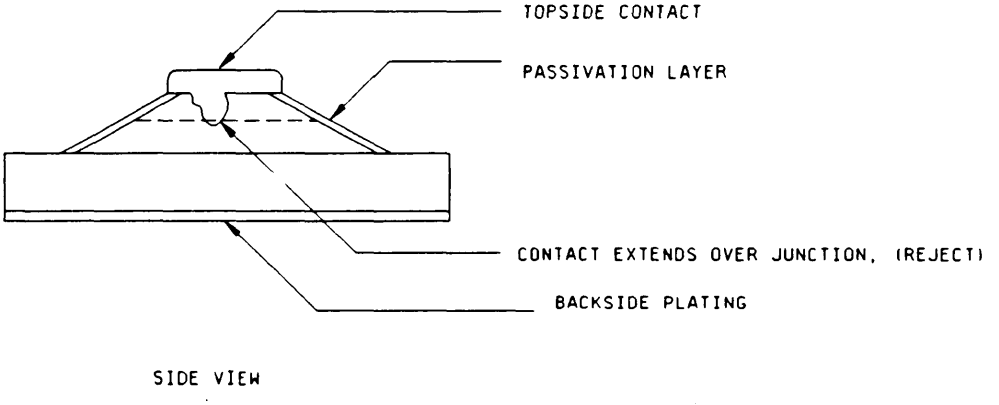

FIGURE 2073-1. Passivated mesa.

PASSIVATED PLANAR WITH DIFFUSED GUARD RING

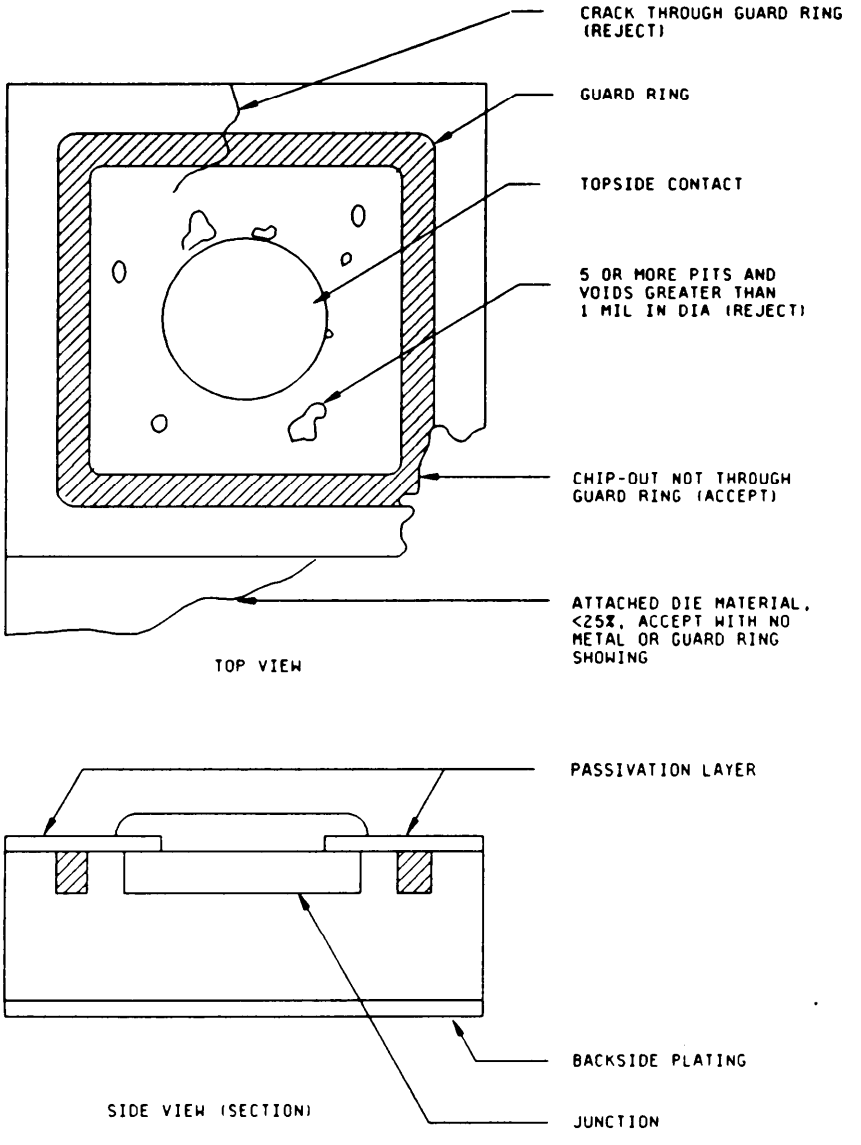

FIGURE 2073-2. Passivated planar with diffused guard ring.

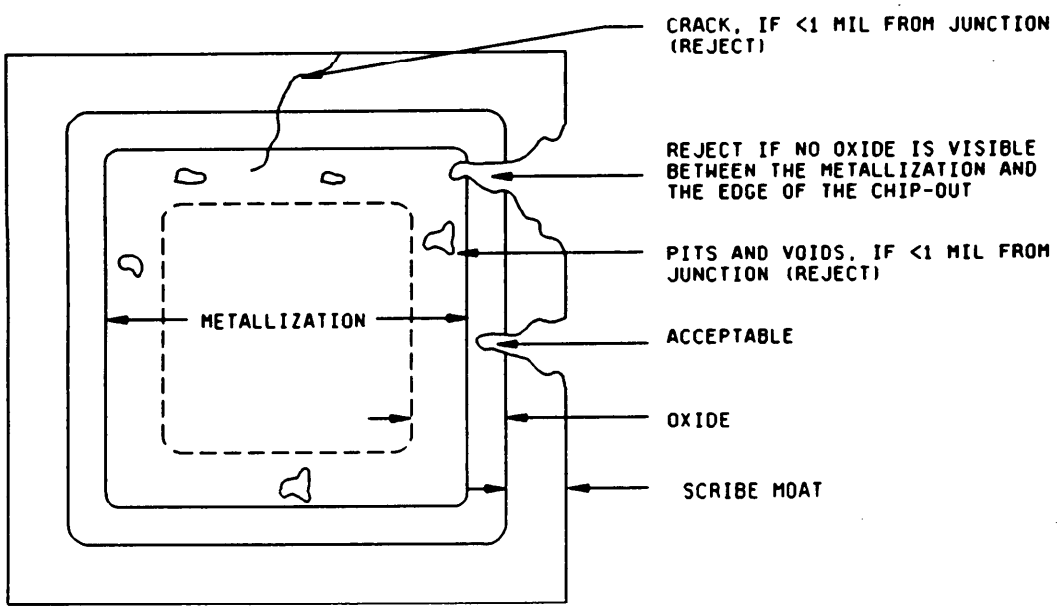

NOTE: For peak inverse voltages of 300 V or more, the rejection criteria shall be 2 mils from the junction.

FIGURE 2073-3. Oxide passivated device with scribe moat.

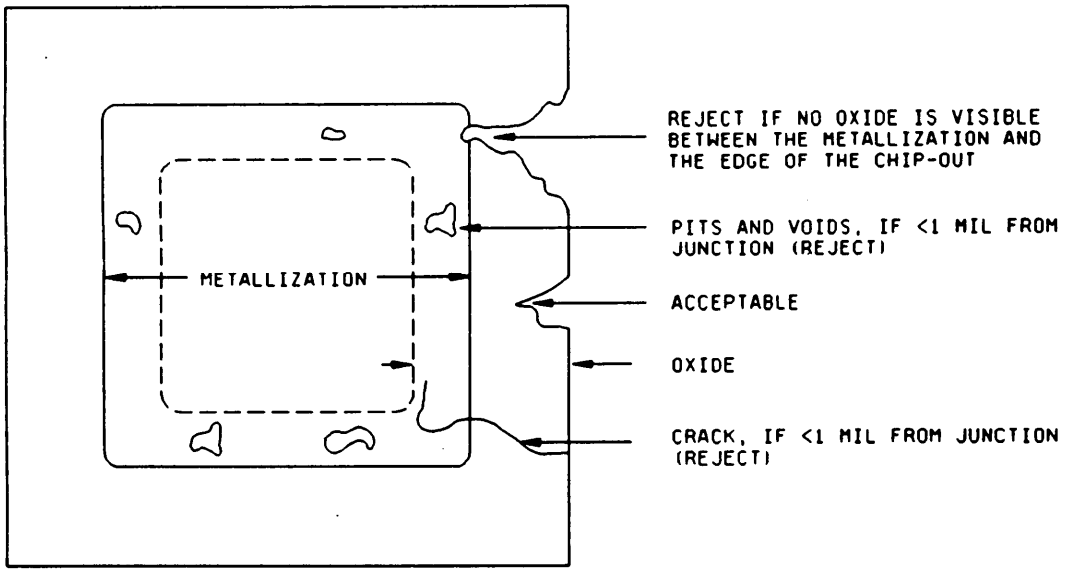

NOTE: For peak inverse voltages of 300 V or more, the rejection criteria shall be 2 mils from the junction.

FIGURE 2073-4. Oxide passivated device without scribe moat.

METHOD 2074.3

INTERNAL VISUAL INSPECTION (DISCRETE SEMICONDUCTOR DIODES)

1. Purpose. The purpose of this test is to check the materials, design, construction, and workmanship of discrete semiconductor diodes and other two-terminal semiconductor devices described herein. All tests shall be performed to detect and eliminate those devices with defects that could lead to device failures. Opaque glass type constructions shall be examined before encapsulation. (After encapsulation, see MIL-STD-750, method 2068). Metal can devices shall be examined before capping. (After capping or sealing, see MIL-STD-750, method 2071). Clear glass construction shall be examined after encapsulation.

2. Apparatus.

a. The apparatus for these tests shall include optical equipment and any visual standards (e.g., gauges, drawings, photographs) necessary to perform an effective examination and enable the operator to make objective decisions on the acceptability of the device being examined. Any necessary fixturing for handling devices during examination to promote efficient operation without damaging the units shall be provided.

b. Unless otherwise specified, a monocular, binocular, or stereo microscope capable of magnification from 20x minimum to 30x maximum shall be used. The inspection shall be performed under suitable illumination.

3. Procedure. The devices shall be examined at the specified magnifications to determine compliance with the requirements of the applicable sections of this test method based on device construction. Examinations for transparent body devices shall be performed anytime prior to body coating or painting. Axial lead devices shall be viewed at approximate right angles to their major axis while being rotated through 360″. For the time interval, if any, between visual inspection and package sealing, devices shall be stored, handled, and processed in a manner to avoid contamination and to preserve the integrity of the devices as inspected.

3.1 Small signal, computer, regulator, low power rectifiers, and microwave diodes.

3.1.1 Axial lead. transparent body, pressure contact design. The following examinations shall be made after encapsulation (C and S bend whisker).

3.1.1.1 Glass cracks and chips (see figure 2074-1). No cracks shall be allowed in the vicinity of the cavity. Any crack originating at either end of the package or crack that extends into the body of the glass toward the cavity more than 25 percent of the glass-to-glass or glass-to-metal seal length shall be cause for rejection. Any glass chip deep enough to expose the plug or lead surface and extending longitudinally into the glass-to-metal seal toward the cavity to reduce the effective seal length to less than one external lead diameter shall be cause for rejection.

3.1.1.2 Incomplete seal. All devices shall be inspected for glass-to-metal seal and glass-to-glass seal. Both seals shall be a minimum of one external lead diameter over the entire sealed portion (sealed interface).

3.1.1.3 Bubbles in seal. All devices shall be inspected for bubbles in the glass-to-metal or glass-to-glass seal. A series of bubbles that reduce the effective seal length to less than one external lead diameter shall be cause for rejection. Bubbles in the glass, but not effecting the glass-to-glass or glass-to-metal seal area, are not cause for rejection.

3.1.1.4 Glass package deformities (see figure 2074-2). Any glass envelope deformity equal to or greater than 75 percent of the external lead diameter shall be cause for rejection.

3.1.1.5 Extraneous matter. A device shall be rejected if there are unattached solder balls, semiconductor material, chips, flaked plating, or opaque material that is larger that the smallest distance between exposed active areas.

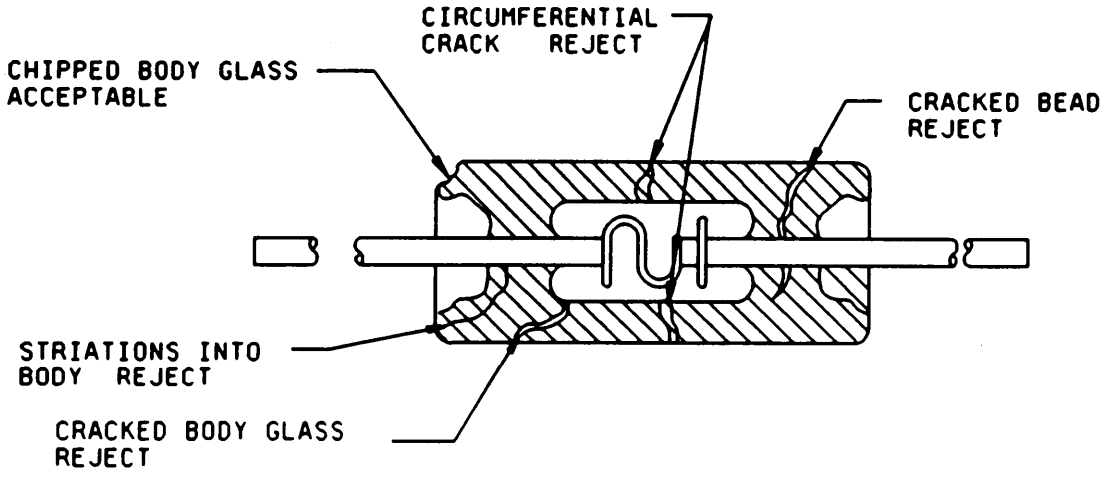

FIGURE 2074-1. Glass cracks and chips.

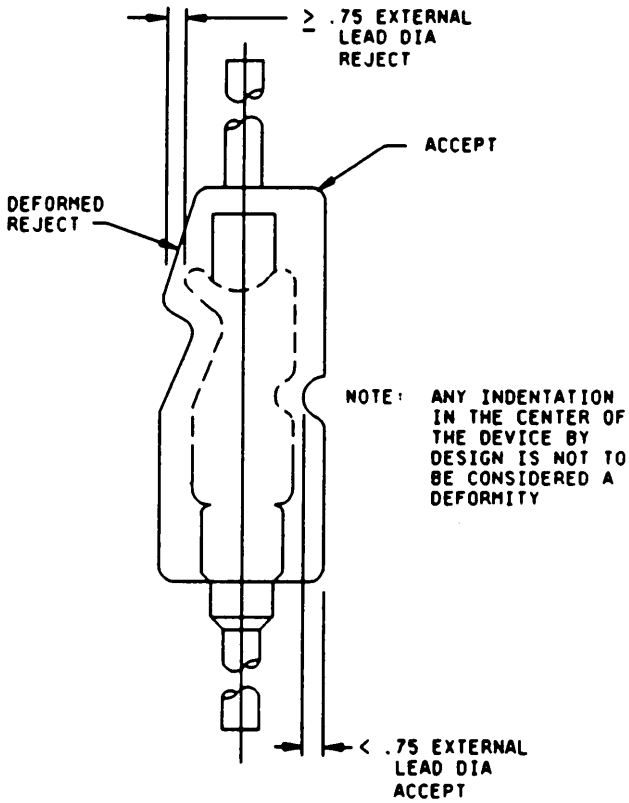

FIGURE 2074-2. Package deformities.

3.1.1.6 Solder protrusions (see figure 2074-3). All devices shall be inspected for solder protrusions. Any device with protrusion that extends more than twice the smallest protrusion width shall be rejected.

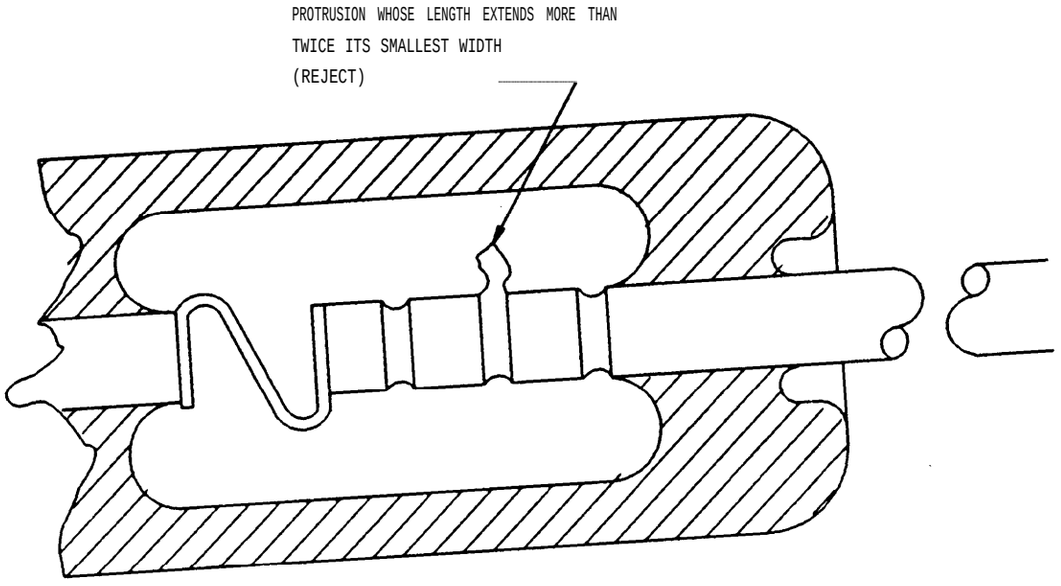

FIGURE 2074-3. Solder protrusions.

3.1.1.7 Pressure contact defects. The following misalignments or deformations shall be cause for rejection:

a. Whisker embedded within glass body wall (see figure 2074-4)

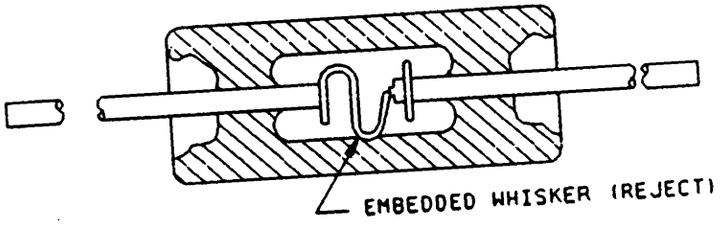

FIGURE 2074-4. Embedded whisker.

b. Toe contact between base of S or C spring and top surface of die caused by insufficient loading (see figure 2074-5).

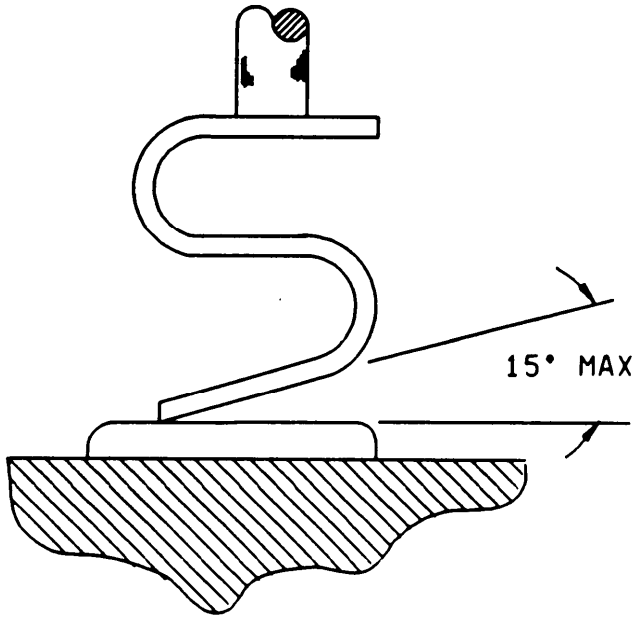

FIGURE 2074-5. Toe contact.

c. Toe contact on top surface of die (see figure 2074-6).

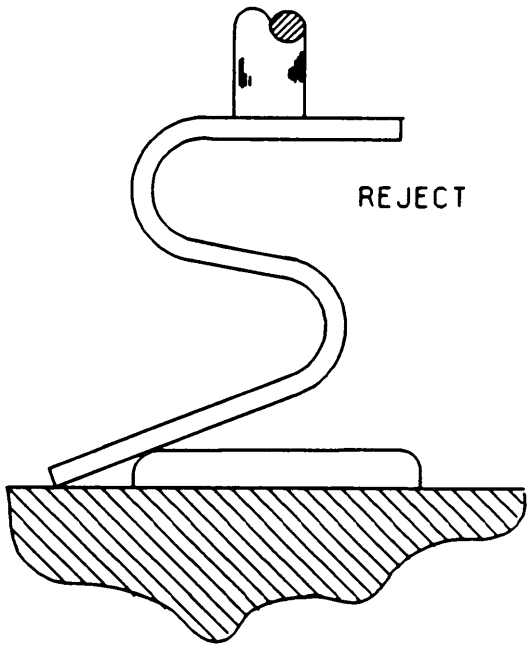

FIGURE 2074-6. Toe contact on top surface of die.

d. Heel contact between base of S or C spring and top surface of die (see figure2074-7).

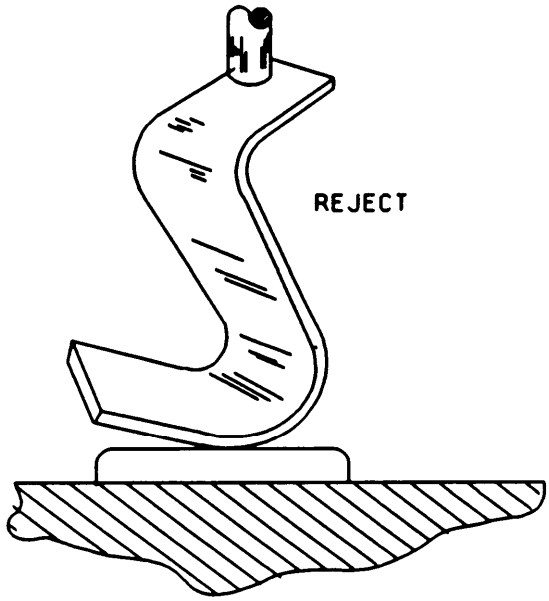

FIGURE 2074-7. Heel contact.

e. Point contact between base of S or C spring and top surface of die except by design (deformed or twisted whisker) (see figure 2074-8).

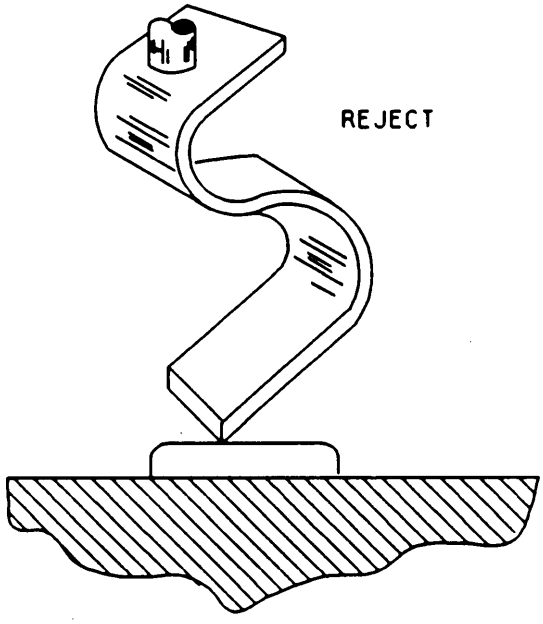

FIGURE 2074-8. Point contact.

f. Design compressed height (see figures 2074-9 and 2074-10). Either half of an S or C bend that is compressed so that any dimension is reduced to less that 50 percent of its design shall be rejected.

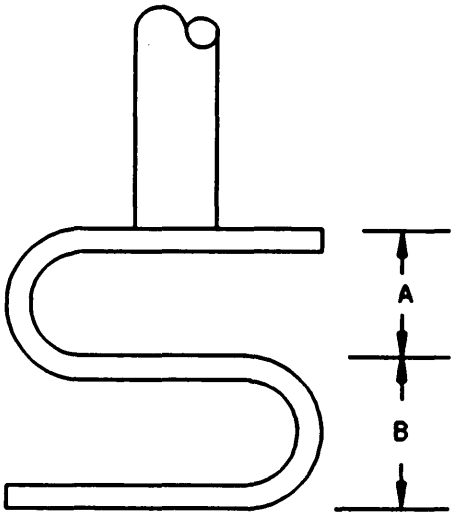

REJECT IF EITHER "A" OR "B" IS LESS THAN 50% OF ITS DESIGN COMPRESSED HEIGHT

FIGURE 2074-9. "S" whisker compressed height.

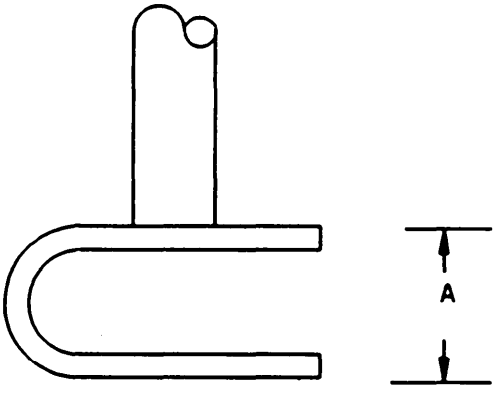

REJECT IF EITHER "A" IS LESS THAN 50% OF ITS DESIGN COMPRESSED HEIGHT

FIGURE 2074-10. "C" bend compressed height.

3.1.1.8 Whisker weld to post. Any device that exhibits weld splash or splatter (teardrop or balled) between whisker and post shall be rejected when it exceeds 25 percent of nominal lead diameter. The profile of the whisker weld to post shall not allow light penetration by more than 50 percent of lead diameter when using backlighting techniques.

3.1.1.9 Die post contact area. Solder shall not be rough in appearance and shall be fused to a minimum of one-half the available bonding area. Any solder overflow that touches the opposite surface of the die or dice shall be cause for rejection.

3.1.1.10 Die alignment (see figure 2074-11). A device shall be rejected if the die surface is not within 15° of being normal to the centerline of the mounting post.

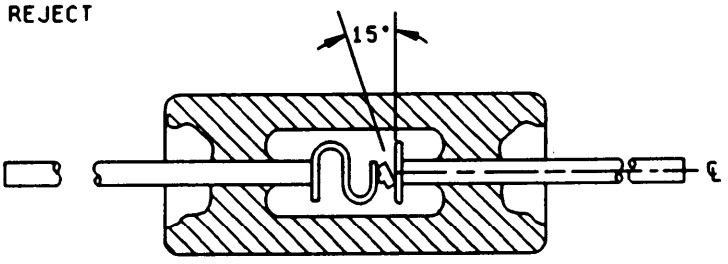

FIGURE 2074-11. Die alignment.

3.1.1.11 Lead alignment defects, (applicable to that portion of each lead within the glass envelope). A device lead which is either misaligned or bent so that is makes an angle with the principle device axis greater than 10° shall be rejected.

3.1.1.12 Multiple chip attachment defects. A multiple chip stack that tilts more than 10° from the principle axis of the device shall be cause for rejection.

3.1.2 Axial lead, metal body, solder contact design.

3.1.2.1 Examinations before capping.

a. Solder defects (see figures 2074-12 and 2074-13). Any device with a solder protrusion that extends more than twice the smallest protrusion width shall be rejected. Solder shall be smoothly formed from one element to another and shall be fused to a minimum of 50 percent of the perimeter between adjacent elements.

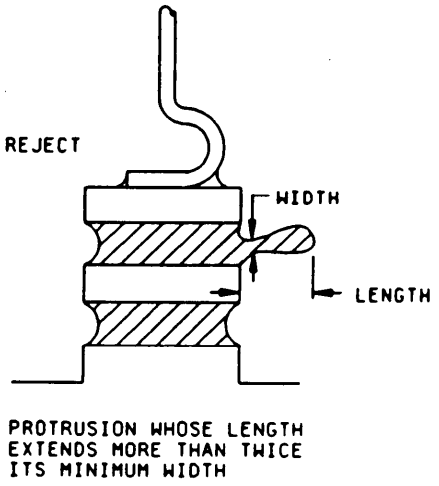

FIGURE 2074-12. Solder protrusion.

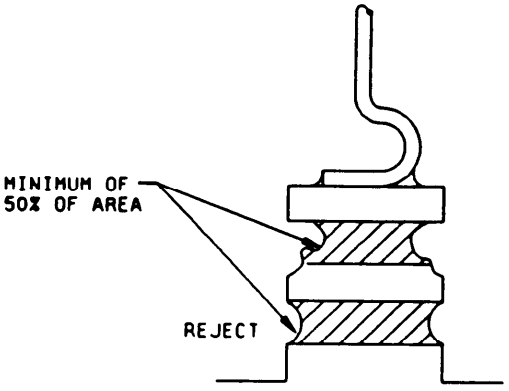

FIGURE 2074-13. Solder flow.

b. Alimnent (see figure 2074-14). Any device whose element has its geometric center displaced more than 33 percent of its width from the die or die stack centerline shall be rejected.

c. Tilt (see figure 2074-15). Any element of a device that is tilted more than 10° from the mounting plane shall be cause for rejection.

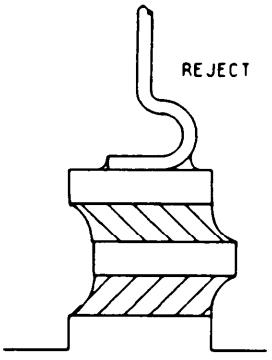

FIGURE 2074-14. Element alignment.

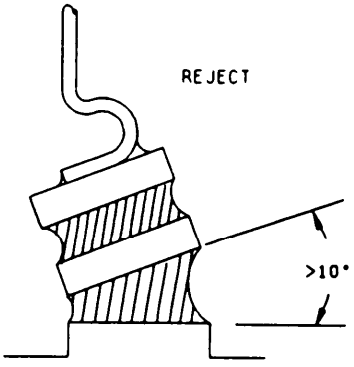

FIGURE 2074-15. Element tilt.

d. Die chipouts (see figure 2074-16). Any device die that exhibits chipouts extending more than 25 percent of the die width or to within 2 mils of the junction area shall be cause for rejection.

e. Die cracks (see figure 2074-17). Any die exhibiting cracks that reduce the total die area (or cracks extending into or across the junction area) to less than 75 percent of its original area shall be cause for rejection.

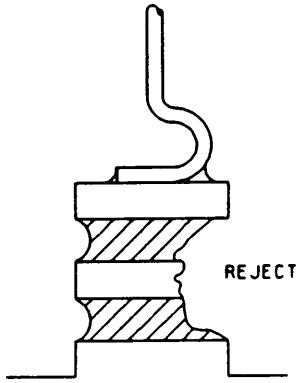

FIGURE 2074-16. Die chipout.

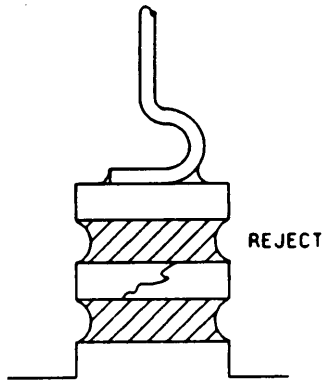

FIGURE 2074-17. Die cracks.

f. Extraneous matter. See 3.1.1.5.

3.1.3 Axial lead transparent body straight through lead to die contact (see figure 2074-18). All inspections for glass cracks, seals, bubbles, and deformities shall be as specified in 3.1.1.1 through 3.1.1.5. The following additional criteria shall be specified for the straight through construction after encapsulation but before body coating or painting.

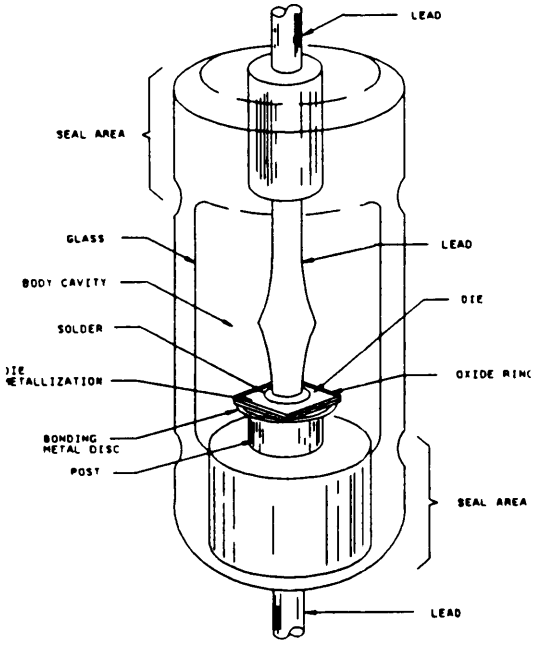

FIGURE 2074-18. Internal construction.

3.1.3.1 Die to post solder connection.

a. Solder voids (see figure 2074-19). A device shall be rejected if solder flow is less than 50 percent of the perimeter of the minimum available contact area of the post.

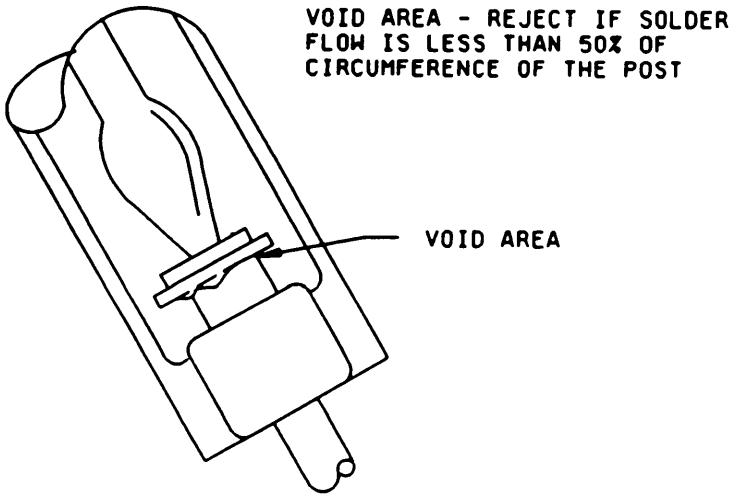

FIGURE 2074-19. Solder voids.

b. Solder overflow (see figure 2074-20). A device shall be rejected if any solder flow touches the opposite surface of the die.

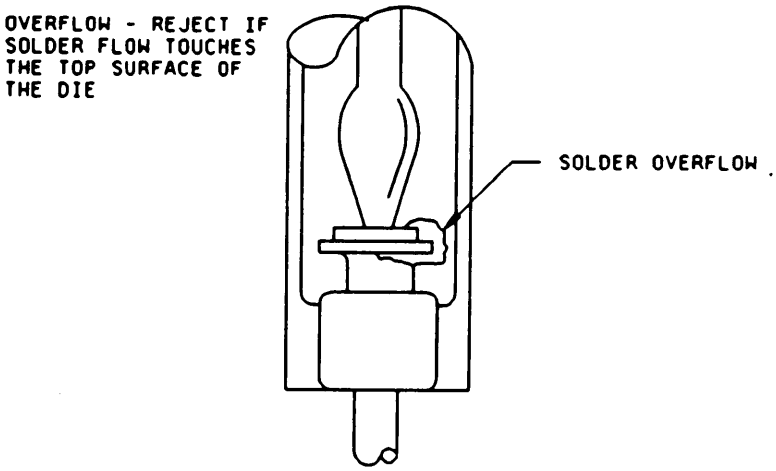

FIGURE 2074-20. Solder bridge.

3.1.3.2 Lead to die solder connection (see figure 2074-21). A device shall be rejected if more than 50 percent of the perimeter of the available contact area of the lead is void of solder.

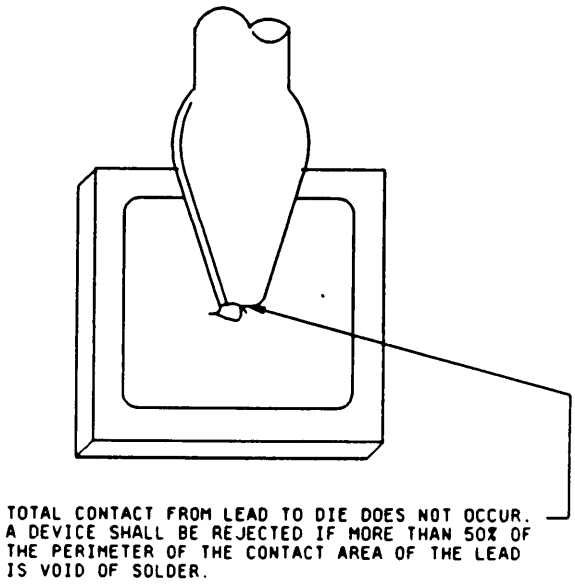

FIGURE 2074-21: Lead to die solder connection.

A. Solder overflow (see Figure 2074-22). A device shall be rejected if solder flow extends beyond 50 percent of the distance from the mental to the outer edge of the oxide.

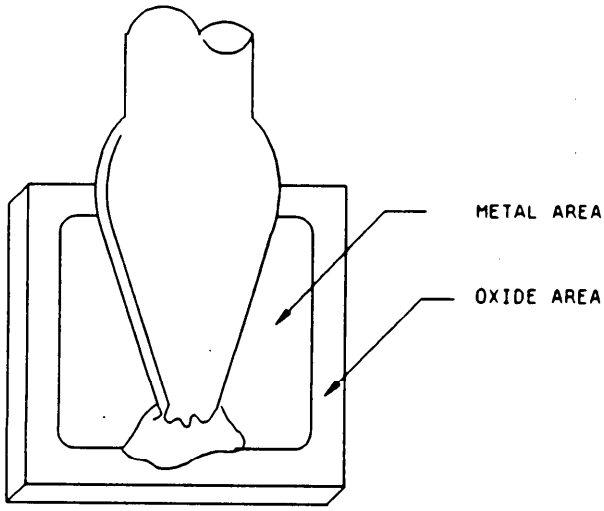

FIGURE 2074-22. Solder overflow.

b. Solder protrusion. slivers. and spikes (see figure 2074-23>. A device shall be rejected if solder slivers and spikes are not securely attached to the main body. A securely attached sliver of spike is one having a cross sectional area greater at the area of attachment than anywhere else on the solder protrusion and having no necked down areas. Solder protrusions, slivers, and spikes whose length exceeds twice the smallest width of attachment shall be rejected.

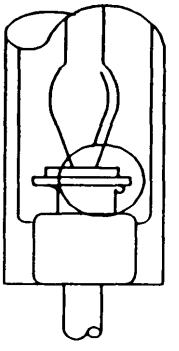

FIGURE 2074-23. Solder slivers and spikes.

c. Solder balls. A device shall be rejected if there are any insecurely attached solder balls. An insecurely attached solder ball is one whose major cross sectional area is more than twice the cross sectional area of the attachment.

3.1.3.3 Die to die solder connection (see figure 2074-24). A device shall be rejected if more than 50 percent of the perimeter of the available contact area of the die is void of solder.

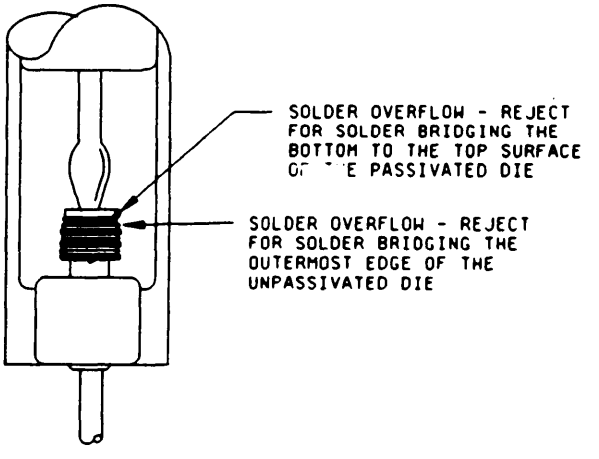

FIGURE 2074-24. Die to die solder connection.

3.1.4 Axial lead or MELF (where applicable), double plug, transparent body.

3.1.4.1 Glass cracks (see figure 2074-25). No cracks shall be allowed in the vicinity of the cavity or die. Any spiral or meniscus crack originating at either end of the package or glass that extends into the body of the glass toward the die more than 25 percent of the designed seal length shall be cause for rejection. Any chip deep enough to expose the plug surface and extending longitudinally into the glass toward the die more than 25 percent of the designed seal length shall be cause for rejection.

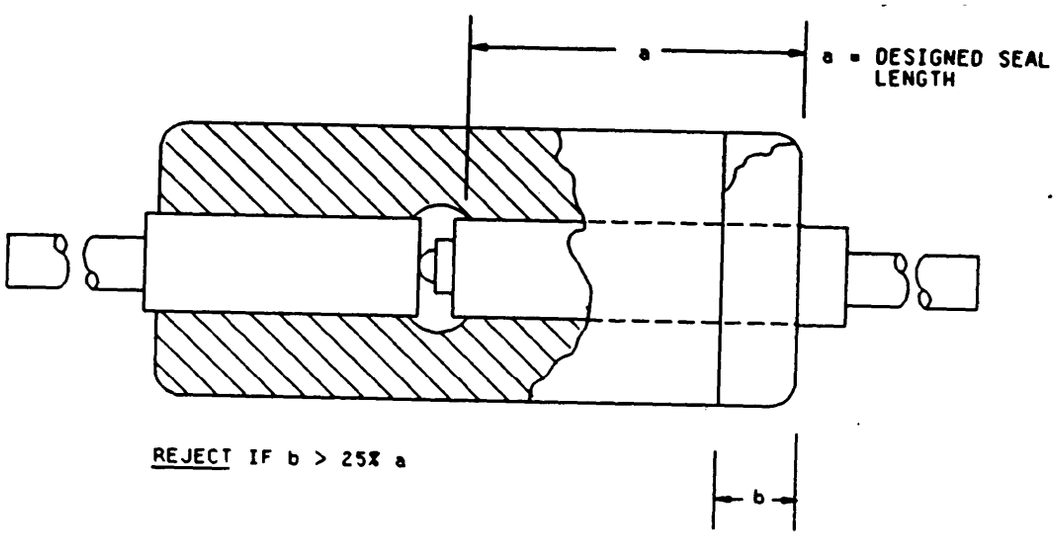

FIGURE 2074-25. Glass cracks.

3.1.4.2 High seal (see figure 2074-26). Any device which displays a glass case off center condition reducing the seal band of either plug by more than 25 percent of its designed length shall be cause for rejection (see figure 2074-32).

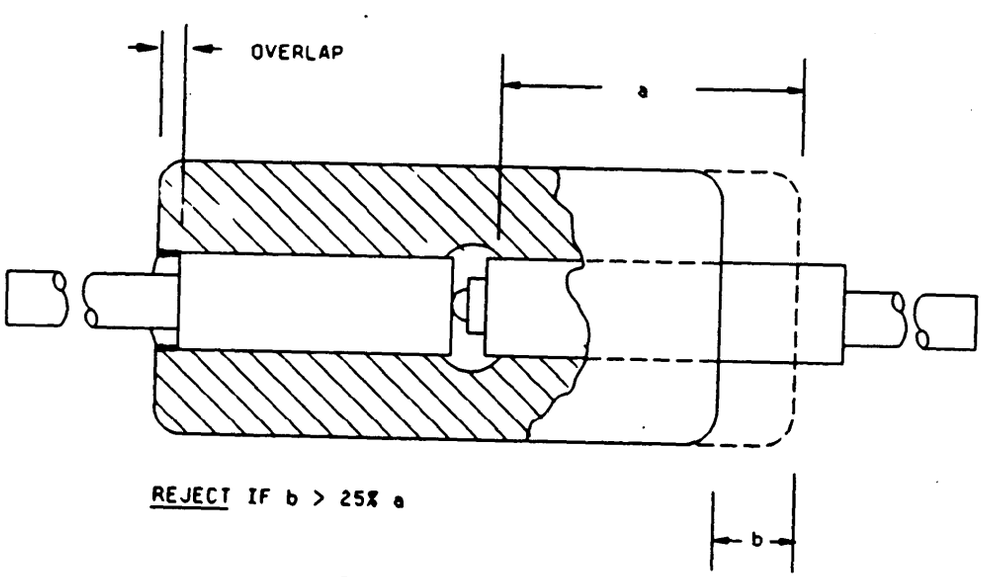

FIGURE 2074-26. High seal.

3.1.4.3 Low seal (see figure 2074-27). Any anomaly such as bubbles, plug blisters, separations, leaching, or undersealing that affects the combined seal length of either plug by allowing a sealing band less than 50 percent of the designed seal length on any package type shall be cause for rejection.

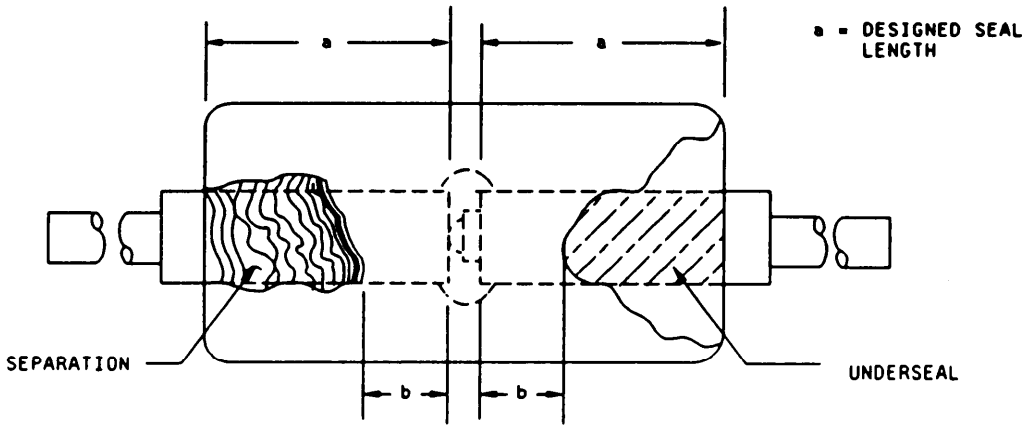

REJECT IF b < 50% a

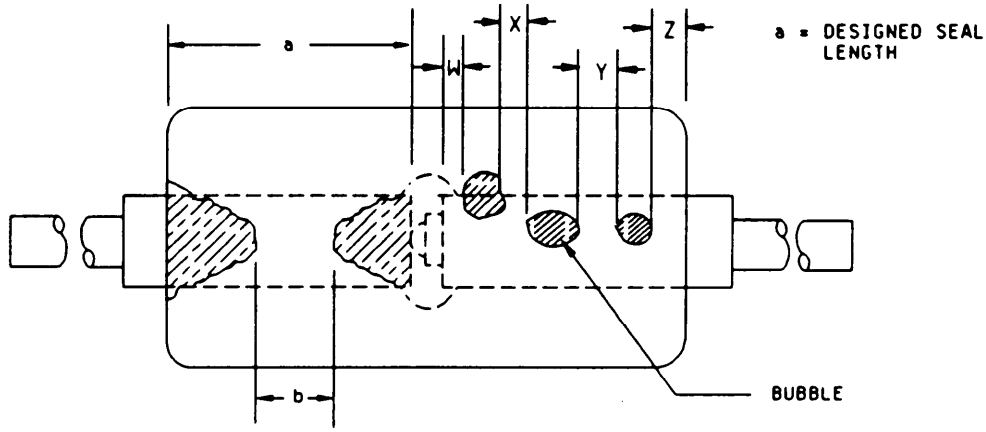

REJECT IF b < 50% a

REJECT IF W +X +Y +Z < 50% a

FIGURE 2074-27. Low seal.

3.1.4.4 Plug alignment (see figures 2074-28 and 2074-29). All devices shall be inspected for proper plug alignment. A plug displacement distance more than 25 percent of the diameter of the plug shall be cause for. rejection. The plug shall not tilt to the degree that it touches the chip or is misaligned from the other plug axis more than 5°.

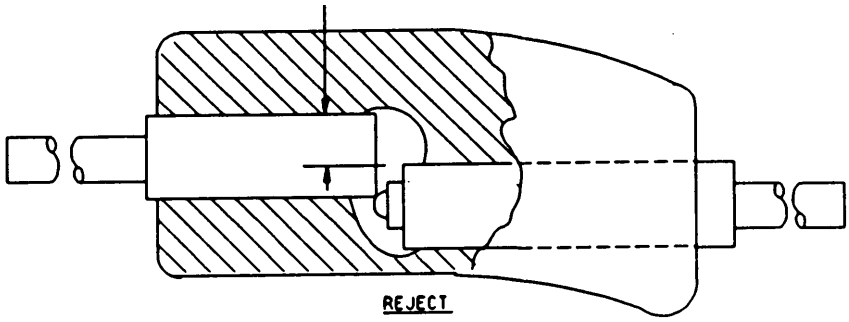

FIGURE 2074-28. Plug alignment.

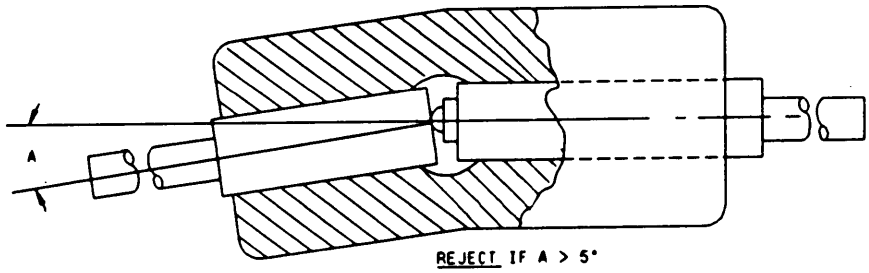

FIGURE 2074-29. Plug displacement.

3.1.4.5 Extraneous matter. A device shall be rejected if there are unattached solder balls, semiconductor material, chips, flaked plating, or opaque material that is larger than the smallest distance between exposed active areas.

3.1.4.6 Lead connections (see figure 2074-30). Lead to plug connections shall be inspected for incomplete welds. Any partial welds less than 75 percent of total weld area shall be cause for rejection.

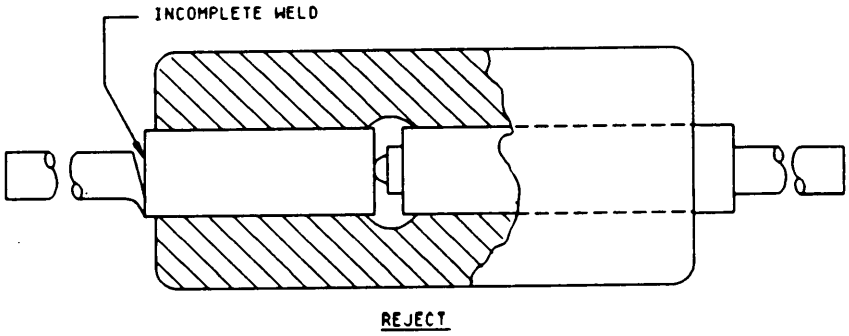

FIGURE 2074-30. Incomplete weld

3.1.5 Axial lead, transparent body, point contact. All inspections for glass cracks, seals, bubbles, and deformities shall be as specified in 3.1.1.1 through 3.1.1.5. The following additional criteria shall be specified for the point contact construction after encapsulation but before body coating or painting.

3.1.5.1 Pressure contact defects. The following misalignments or deformities shall be cause for rejection:

a. Whisker touches glass body wall (see figure 2074-31).

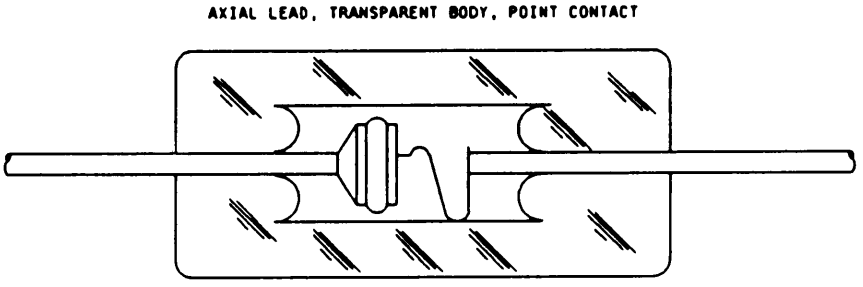

FIGURE 2074-31. Whisker touches glass body wall (reject).

b. Whisker loops touch one another (see figure 2074-32).

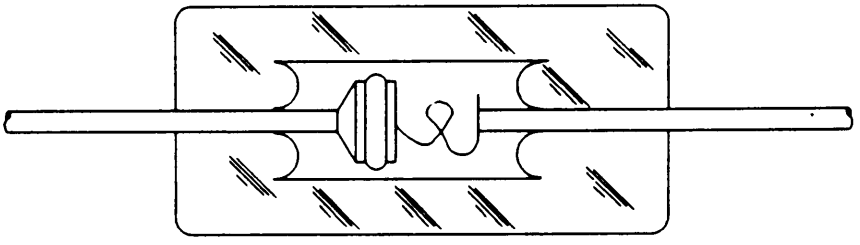

FIGURE 2074-32. Whisker loops touch one another (reject).

c. Whisker angle over 10° from normal (see figure 2074-33).

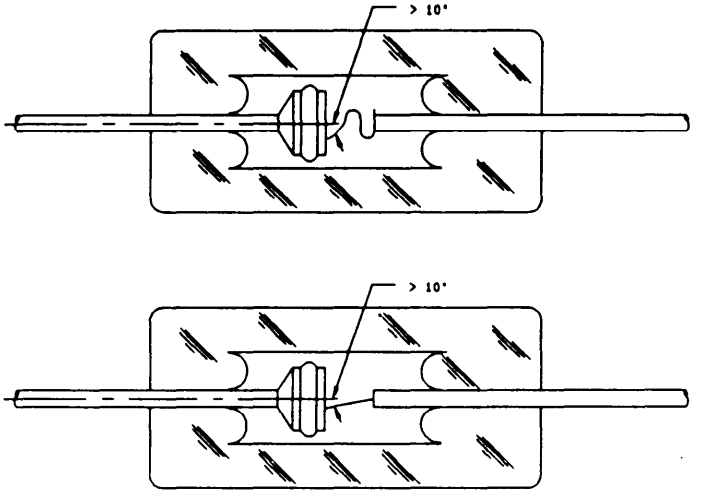

FIGURE 2074-33. Whisker and angle over 10° from normal (reject).

3.1.5.2 Whisker weld to post. Any device that exhibits weld splash or splatter (tear dropped or balled) between whisker and post shall be rejected when it exceeds 25 percent of nominal lead diameter. The profile of whisker weld to the post shall not allow light penetration by more than 50 percent of lead diameter when using backlighting techniques.

3.1.5.3 Solder voids. A device shall be rejected if solder flow is less than 50 percent of the perimeter of the minimum available contact area of the die.

3.1.5.4 Die to vest contact area. Solder shall be smoothly formed from one element to another and shall be fused to a minimum of one-half the available bonding area. Any solder overflow that touches the opposite surface of the die shall be cause for rejection.

3.1.5.5 Die alignment. A device shall be rejected if the die surface is not within 15° of being normal to the centerline of the mounting post.

3.1.5.6 Lead alignment defects (applicable to that portion of each (cad within the glass envelope). A device whose lead is either misaligned or bent so that is makes an angle with the principle device axis greater than 10° shall be rejected.

3.1.5.7 Die touches glass package (see figure 2074-34). A device shall be rejected if the die touches the glass envelope.

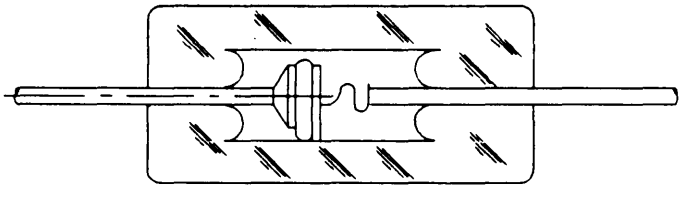

FIGURE 2074-34. Die touches glass package (reject).

3.2 Power rectifiers and regulators.

3.2.1 Axial lead double plug opaque body.

3.2.1.1 Die mounting and alignment. After bonding the die to the heat sink, plugs, or leads, the following shall be inspected for defects:

a. Die geometry. A die shall be rejected if it is chipped or broken to the extent that 75 percent or less of the original surface remains.

b. Axial alignment of plugs and die. Plugs shall be aligned axially within one-eighth of the diameter of either plug.

c. Tilted die. A device shall be rejected if the die is tilted so that the die surface is greater than 5° from being perpendicular to the mounting post axis.

3.2.1.2 Die cracks. Any die exhibiting cracks that reduce the total die area (or cracks extending into or across the junction area) to less than 75 percent of its original area shall be cause for rejection.

3.2.1.3 Inadequate brazing. A device shall be rejected if less than 90 percent of the visible metallized surface (perimeter) is brazed to the heat sink or lead.

3.2.1.4 Flaking or loose material. No unattached solder, braze, or other bonding material shall extend from the plugs. Any blistering or peeling of plug surface shall be cause for rejection.

3.2.1.5 Extraneous matter. A device shall be rejected if there is any extraneous, particulate matter between the terminal plugs or on the plug surface. No foreign stains shall be permitted on plug surfaces.

3.2.2 Axial lead. double plug, transparent body. The inspections in 3.2.2.1 through 3.2.2.4 may be performed on a sealed device if all inspection criteria are clearly visible and detectable. After bonding the die to the heat sink, plugs, or leads, the following shall be inspected for defects.

3.2.2.1 Axial alignment of plugs and die. Plugs shall be aligned within one-eighth of the diameter of either plug.

3.2.2.2 Tilted die. A device shall be rejected if the die is tilted so that the die surface is greater than 5° from being perpendicular to the mounting post axis.

3.2.2.3 Inadequate brazing. A device shall be rejected if less than 90 percent of the visible metallized surface (perimeter) is brazed to the heat sink or lead.

3.2.2.4 Flaking or loose material. No unattached solder, braze, or other bonding material shall extend from the plugs. Any blistering or peeling of plug surface (cavity type) shall be cause for rejection. Any blistering or peeling of plug surface (non-cavity type) which reduces designed seal length to less than 25 percent shall be cause for rejection.

3.2.2.5 Extraneous matter. A device shall be rejected if there are unattached solder balls, semiconductor material, chips, flaked plating, or opaque material that is larger than the smallest distance between exposed active areas.

3.2.2.6 Cracks in glass. No cracks shall be allowed in the vicinity of the cavity. Any crack originating at either end of the package or crack that extends into the body of the glass toward the cavity more than 25 percent of the glass-to-glass or glass-to-metal seal length shall be cause for rejection. Any glass chip deep enough to expose the plug, or lead surface and extending longitudinally into the glass-to-metal seal toward the cavity to reduce the effective seal length to less than one external lead diameter shall be cause for rejection.

3.2.2.7 Glass bubbles. All devices shall be inspected for bubbles in the glass-to-metal or glass-to-glass seal. A series of bubbles that reduce the effective seal length to less than one external lead diameter shall be cause for rejection.

3.2.2.8 Encapsulant position. A device shall be rejected if the encapsulant covers less than 80 percent of the design plug surface.

3.2.3 Metal body devices. The following inspections shall be made prior to capping.

3.2.3.1 Die and lead assembly (see figures 2074-35 and 2074-36). The die and lead assembly shall be located on the base pedestal so that there is complete contact over the design contact area. The lead shall be free of nicks and scrapes that reduce the lead diameter by more than 5 percent. The die and lead assembly shall not be tilted more than 5° with respect to the base.

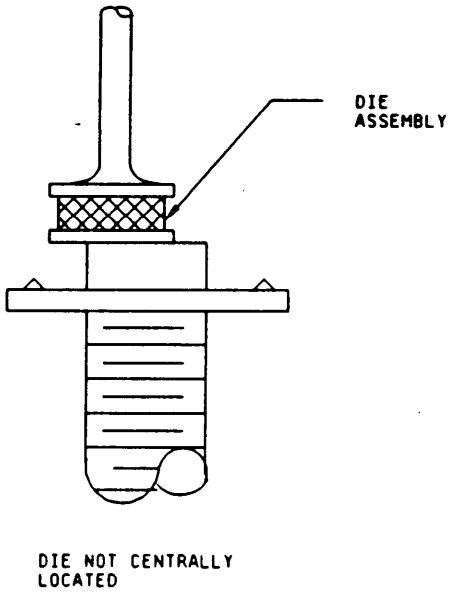

FIGURE 2074-35. Offset die.

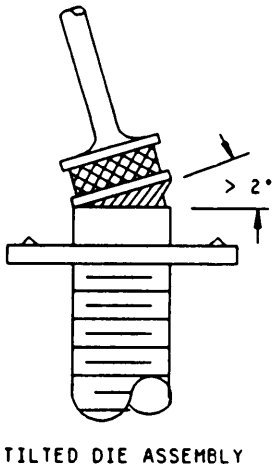

FIGURE 2074-36. Tilted die.

3.2.3.2 Extraneous matter.

a. Solder slivers and spikes. A device shall be rejected if solder slivers and spikes are not securely attached to the parent body of the solder. A securely attached sliver or spike is one having a cross sectional area greater at the area of attachment than anywhere else on the solder protrusion and having no necked-down areas.

b. Foreign matter. A device shall be rejected if there are unattached solder balls, semiconductor materials, chips, flaked plating, or opaque material that is larger than the smallest distance between exposed active areas.

c. Multiple die attachments. A device shall be rejected if the attached portion of an adjacent die exceeds 25 percent of the die area.

3.2.3.3 Assembly defects.

a. Tilted elements. A device shall be rejected if any element of the assembly is tilted in excess of 10° from the normal mounting plane.

b. Misaligned elements. A device shall be rejected if any element of the assembly is misaligned or displaced in excess of 33 percent of its width from the die or die stack centerline, bridges two active regions, or extends beyond the isolation region of the oxide.

3.2.3.4 Metal body diamond base regulators (see figure 2074-37).

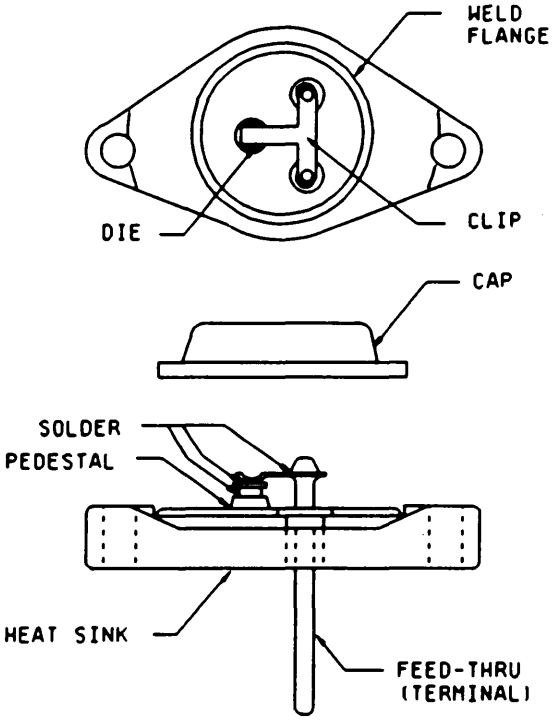

FIGURE 2074-37. Diamond base construction.

3.2.3.4.1 Die to pedestal and die to clip solder connections.

a. Solder voids. A device shall be rejected if solder flow is less than 50 percent of the perimeter of the minimum available contact area.

b. Solder overflow. A device shall be rejected if any solder flow bridges from the top to bottom surface of the die or reduces the normal separation of two active regions by 50 percent or more.

3.2.3.4.2 Clip to post and feed through to heat sink solder connections.

a. Solder voids. A device shall be rejected if the wetting action of the solder to each of of the connection is not continuous.

b. Solder overflow. A device shall be rejected if any solder flow extends on to any portion of the weld flange of the heat sink.

METHOD 2075

DECAP INTERNAL VISUAL DESIGN VERIFICATION

1. Purpose. The purpose of this examination is to verify that design and construction are the same as those documented in the qualified design report and for which qualification approval has been granted. This test is destructive and would normally be employed on a sampling basis during qualification or quality conformance inspection of a specific device type.

2. Apparatus. Equipment used in this examination shall be capable of demonstrating conformance to the requirements of the applicable acquisition document and shall include optical equipment with sufficient magnification to verify all structural features of the devices.

3. Procedure. Devices shall be selected at random from the inspection lot and examined using sufficient magnification to verify that design and construction are in accordance with the requirements of the applicable design documentation or other specific requirements (see 4.). Specimens of constructions which do not contain an internal cavity (e.g., sealed or embedded devices) or those which would experience destruction of internal features of interest as a result of opening, may be obtained from manufacturing prior to sealing. Specimens of constructions with an internal cavity shall be selected from devices which have completed all manufacturing operations and they shall be delidded or opened taking care to minimize damage to the areas to be inspected. When specified by the applicable detail specification, specimens of constructions with an internal cavity may be obtained from manufacturing prior to sealing.

3.1 Photographs of die topography and intraconnection pattern. When specified, a color photograph or transparency shall be made showing the topography of elements formed on the die or substrate and the metallization pattern. This photograph shall be at a minimum magnification of 80x except that if this results in a photograph larger than 3.5 x 4.5 inches (88.90 x 114.30 mm), the magnification may be reduced to accommodate the 3.5 x 4.5 inches (88.90 x 114.30 mm) view.

3.2 Failure criteria. Devices which fail to meet the detailed requirements for design and construction shall constitute a failure.

4. Summary. The following conditions shall be specified in the detailspecification:

a. Any applicable requirements for design and construction.

b. Allowance for obtaining internal cavity devices prior to encapsulation (see 3.).

c. Requirement for photographic record, if applicable (see 3.1), and disposition of photographs.

d. Sample size.

METHOD 2076.2

RADIOGRAPHY

1. Purpose. The purpose of this examination is to nondestructively detect defects within the sealed case, especially those resulting from sealing of the lid to the case, and internal defects such as foreign objects, improper interconnecting wires, and voids in the die attach material or in the glass when glass seals are used. This test establishes methods, criteria, and standards for radiographic examination of discrete devices.

NOTE: For certain case types, the electron shielding effects of device construction materials (packages or internal) may effectively prevent radiographic identification of certain types of defects from some or all possible viewing angles. This factor should be considered in relation to the design of each when application of this test method is specified.

2. Apparatus. The apparatus and materials for this test shall include:

a. Radiographic equipment with a sufficient voltage range to penetrate the device. The focal distance shall be adequate to maintain a sharply defined image of a object with a major dimension of .001 inch (0.025 mm).

b. Radiographic film: (Eastman type R or equivalent).

c. Radiographic viewer capable of .001 inch (0.025 mm) resolution in any major dimension.

d. Holding fixtures capable of holding devices in the required positions without interfering with the accuracy or ease of image interpretation.

e. Radiographic quality standards capable of verifying the ability to detect all specified defects for particular package types being x-rayed.

f. A .062 inch (1.57 mm) minimum lead topped table shall be used to prevent back scatter of radiation.

3. Procedure. The x-ray exposure factors, voltage, milliampere setting and time settings shall be selected or adjusted as necessary to obtain satisfactory exposures and achieve maximum image details within the sensitivity requirements for the device or defect features the radiographic test is directed toward. Unless otherwise specified, the x-ray voltage shall be the lowest consistent with these requirements and shall not exceed 150 kV. Although higher voltages may be necessary to penetrate certain packages, these levels may be damaging to some device technologies.

3.1 Mounting and views. The devices shall be mounted in the holding fixture so that the devices are not damaged or contaminated and are in the proper plane as specified. The devices may be mounted in any type of fixture and masking with lead diaphragms or barium clay may be employed to isolate multiple specimens provided the fixtures or masking materials do not block the path of the x-rays to the film or any portion of the device.

3.1.1 Views.

a. Unless otherwise specified, flat packages and single ended cylindrical devices shall have one view taken with the x-rays penetrating in the Y direction as defined in figures 1 and 2 of the general requirements herein. When more than one view is required, the second and third views, as applicable, shall be taken with the x-rays penetrating in the X and Z directions respectively.

b. Unless otherwise specified, stud-mounted and cylindrical axial lead devices shall have one view taken with the x-rays penetrating in the X direction as defined in figures 1 and 2 of the general requirements herein. When more than one view is required, the second and third views, as applicable, shall be taken with the x-rays penetrating in the Z direction and at 45° between the X and Z directions.

c. All JANS devices shall have two views taken with x-rays penetrating in the X and Y directions, stud-mounted and axial lead device views shall be taken with x-rays penetrating in the X and Z directions.

3.2 Radiographic quality standard. The radiographic quality standard shall consist of a suitable standard penetrameter such as radiographic quality standard ASTM type B - Image quality indicator for semiconductor radiography or equivalent device. Each radiograph shall have two image quality standards exposed with each view located (and properly identified) in opposite corners of the film. The radiographic density of penetrameters chosen shall bracket the density of the devices beings inspected.

3.3 Film and marking. The radiograph film shall be in a film holder backed with a minimum of .062 inch (1.57 mm) lead or the holder shall be placed on the lead topped table (see 2.f). The film shall be identified using techniques that legibly print the following information, photographically on the radiograph:

a. Device manufacturer's name or code identification number.

b. Device type or Part or Identifying Number (PIN).

c. Production lot number, date code, or inspection lot number.

d. Radiographic film view number and date.

e. Device serial or cross reference numbers, when applicable (see 3.3.2).

f. X-ray laboratory identification, if other than device manufacturer.

g. X-ray axis view (X, Y, or Z).

3.3.1 Nonfilm techniques, when specified. The use of nonfilm techniques is permitted under the following conditions:

a. Permanent records are not required.

b. The equipment is capable of producing results of equal quality when compared with film techniques.

c. All requirements of this method are complied with except those pertaining to the actual film.

3.3.2 Serialized devices. When device serialization is required, each device shall be readily identified by a serial number. The devices shall be radiographed in consecutive, increasing serial order. When a device is missing, the blank space shall contain either the serial number or other x-ray opaque objects to readily identify and correlate the x-ray data. When more than one consecutive device is missing within serialized devices, the serial number of the last device before the skip and the first device after the skip may, at the manufacturers option, be used in place of the multiple opaque objects.

3.3.3 Special device marking. When specified (see 4.c), the devices that have been x-rayed and found acceptable shall be identified with a blue dot on the external case. The blue dot shall be approximately .062 inch (1.57 mm) in diameter. The color selected from FED-STD-595 shall be any shade between 15102-15123 or 25102-25109. The dot shall be placed so that it is readily visible but shall not obliterate other device marking.

3.4 Tests. The x-ray exposure factor shall be selected to achieve resolution of .001 inch (0.025 mm) major dimension, less than 10 percent distortion and an "H" and "D" film density between 1 and 2.5 in the area of interest of the device image. Radiographs shall be made for each view required (see 4.).

3.5 Processing. The radiographic film manufacturer's recommended procedure shall be used to develop the exposed film, and film shall be processed so that it is free of processing defects such as fingerprints, scratches, fogging, chemical spots, blemishes.

3.6 Operating personnel. Personnel who will perform radiographic inspection shall have training in radiographic procedures and techniques so that defects revealed by this method can be validly interpreted and compared with applicable standards. The following minimum vision requirements shall apply for visual acuity of personnel inspecting film as well as personnel authorized to conduct radiographic tests:

a. Distant vision shall equal at least 20/30 in both eyes, corrected or uncorrected.

b. Near vision shall be such that the operator can read Jaegger type No. 2 at a distance of 16 inches (406.4 mm), corrected or uncorrected.

c. Vision tests shall be performed by an oculist, optometrist, or other professionally recognized personnel at least once a year.

3.7 Interpretation of radiographs. Utilizing the equipment specified herein, radiographs shall be inspected to determine if each device conforms to this standard or if it is defective and shall be rejected. Interpretation of the radiograph shall be made under low light level conditions without glare on the radiographic viewing surface. The radiographs shall be examined on a suitable illuminator with variable intensity or on a viewer suitable for radiographic inspection on projection type viewing equipment. The radiograph shall be viewed at a magnification between 6x and 20x. Viewing masks may be used when necessary. Any radiograph not clearly illustrating the features in the radiographic quality standards is not acceptable and another radiograph of the devices shall be taken.

3.8 Reports and records.

3.8.1 Reports of inspection. For JANS devices, or when specified for other device classes, the manufacturer shall furnish inspection reports with each shipment of devices. The report shall describe the results of the radiographic inspection, and list the purchase order number or equivalent identification, the PIN, the date code, the quantity inspected, the quantity rejected, and the date of test. For each rejected device, the PIN, the serial number, when applicable, and the cause for rejection shall be listed.

3.8.2 Radiograph submission. When specified, one set of the applicable radiographs shall accompany each shipment of devices.

3.8.3 Radiograph and report retention. When specified, the manufacturer shall retain a set of the radiographs and a copy of the inspection report. These shall be retained for the period specified.

3.9 Examination and acceptance criteria.

3.9.1 Device construction. Acceptable devices shall be of the specified design and construction with regard to the characteristics discernible through radiographic examination. Devices that deviate significantly from the specified construction shall be rejected.

3.9.2 Individual device defects. The individual device examination shall include, but not be limited to, inspection for foreign particles, solder or weld “splash” build up of bonding material, proper shape and placement of lead wires or whiskers, and bond of lead or whisker to semiconductor element. Devices for which the adiograph reveals any of the following defects shall not be accepted.

3.9.2.1 Presence of extraneous matter. Extraneous matter (foreign particles) shall include, but not be limited to:

a. Any foreign particle, loose or attached, greater than .003 inch (0.08 mm) or of any lesser size which is sufficient to bridge nonconnected conducting elements of the device.

b. Any wire tail extending beyond its normal end by more than two diameters at the semiconductor die pad or by more than four wire diameters at the package post (see figure 2076-1).

c. Any burr on a post (header lead) greater than .003 inch (0.08 mm) in its major dimension or of such configuration that it may break away.

d. Excessive semiconductor die bonding material buildup. A semiconductor die shall be mounted and bonded so that it is not tilted more than 10° from mounting surface. The bonding agent that accumuates around the perimeter of the semiconductor die and touches the side of the semiconductor die shall not accumulate to a thickness greater than that of the semiconductor die (see figures 2076-2 and 2076-3). Where the bonding agent is built up but is not touching the semiconductor die, the build up shall not be greater than twice the thickness of the semiconductor die. There shall be no excess semiconductor die bonding material in contact with the active surface of the semiconductor die or any lead or post, or separated from the main bonding material area (see figure 2076-4).

e. Flaking on the header or posts or anywhere inside the case.

f. Extraneous ball bonds anywhere inside case, except for attached bond residue when rebonding is allowed.

3.9.2.2 Unacceptable construction. In the examination of devices, the following aspects shall be considered unacceptable construction and devices that exhibit any of the following defects shall be rejected:

a. Total contact area voids in excess of one-half of the total contact area.

b. A single void which traverses either the length or width of the semiconductor die and exceeds 10 percent of the total intended contact area.

(1) Voids: When radiographing devices, certain types of mounting do not give true representations of voids. When such devices are inspected, the mounting shall be noted on the inspection report (see figure 2076-1).

(2) Wires present, other than those connecting specific areas of the semiconductor die to the external (cads.

(3) Angle between semiconductor die surface and edge less than 45°.

(4) Defective seal: Any device wherein the integral lid seal is not continuous or is reduced from its designed sealing width by more than 75 percent.

NOTE: Expulsion resulting from the final sealing operation is not considered extraneous material as long as it can be established that it is continuous, uniform, and attached to the parent material and does not exhibit a ball, splash, or tear-drop configuration.

(5) Inadequate clearance: Acceptable devices shall have adequate internal clearance to assure that the elements cannot contact one another or the case. No crossover of wires connected to different electrical elements shall be allowed. Depending upon the case type, devices shall be rejected for the following conditions:

(a) Flat pack and dual-in-line (see figure 2076-5).

1. Any lead wire that appears to touch or cross another lead wire or bond (Y plane only).

2. Any lead wire that deviates from a straight line from bond to external lead and appears to be within .002 inch (0.0508 mm) of another bond (Y plane only).

3. Lead wires that do not deviate from a straight line from bond to external lead and appear to touch another wire or bond (Y plane only).

4. Any lead wire that touches or is less than .002 inch (0.0508 mm) from the case or external lead to which it is not attached (X and Y plane).

5. Any bond that is less than .001 inch (0.0254 mm) (excluding bonds connected by a common conductor) from another bond (Y plane only).

6. Any wire making a straight line run (with no arc) from die bonding pad to package post.

(b) Round or “box” transistor type (see figure 2076-6).

1. Any lead wire that touches or is less than .002 inch (0.0508 mm) from the case or external lead to which it is not attached (X and Y plane).

2. Lead wires that sag below an imaginary plane across the top of the bond (X plane only).

3. Any lead wire that appears to touch or cross another lead wire or bond (Y plane only) if bonded to different electrical elements.

4. Any lead wire that deviates from a straight line from bond to external lead appears to touch or to be within .002 inch (0.0508 mm) of another wire or bond (Y plane only).

5. Any bond that is less than .001 inch (0.0254 mm) (excluding bonds connected by a common conductor) from another bond (Y plane only).

6. Any wire making a straight line run (with no arc) from die bonding pad to package post, unless specifically designed in this manner (e.g., clips, rigid connecting leads, or heavy power leads).

7. Any internal post that is bent more than 10° from the vertical (or intended design position) or is not uniform in length and construction or comes closer than one post diameter to another post.

8. Any post in a low profile case (such as a TO-46) which comes closer to the top of the case than 20 percent of the total inside dimension between the header and the top of the case. Any device in which the semiconductor element is vertical to the header, and comes closer than .002 inch (0.0508 mm) to the header or to any part of the case.

(c) Axial lead type (see figure 2076-7).

1. Whisker embedded within glass body wall.

2. Whisker tilted more than 5° in any direction from the device lead axis or deformed to the extent that it touches itself.

3. Either half of an S or C bend whisker that is compressed so that any dimension is reduced to less than 50 percent of its design value. On diodes with whiskers metallurgically bonded to the post and to the die, the whisker may be deformedto the extent that it touches itself if the minimum whisker clearance zone specified in figure 2076-7a is maintained for metal packages.

4. Whiskerless construction device with plug displacement distance more than one-fourth of the diameter of the plug with respect to the central axis of the device.

5. Semiconductor element mounting tilted more than 15° from normal to the main axis of the device.

6. Die hanging over edge of header or pedestal more than 20 percent of the die contact area by design.

7. Less than 75 percent of the semiconductor element base area is bonded to the mounting surface.

8. Voids in the welds which reduce the lead to plug connection by more than 25 percent of the total weld area.

9. Devices with package deformities such as body glass cracks, incomplete seals (e.g., voids, position of glass), die chip outs, and severe misalignment of S- and C-shaped whisker connections to die or post that exceed the limits of the applicable visual inspection requirements.

3.9.3 Encapsulated non-cavity assemblies of discrete devices. External to the individual devices, the encapsulating material shall be examined and rejected for the following defects.

3.9.3.1 Extraneous material. Extraneous matter of any shape with any dimension exceeding .020 inches (0.51 mm). Also, any two adjacent particles of such matter with total dimensions exceeding .030 inches (0.76 mm).

4. Summary. The following conditions shall be specified in the applicable detail specification:

a. Number of views, if other than indicated in 3.1.1 and 3.1.1.1.

b. Radiograph submission, if applicable (see 3.8.2).

c. Marking, if other than indicated in 3.3 and marking of samples to indicate they have been radiographed, if required (see 3.3.3).

d. Sample defects and criteria for acceptance or rejection, if other than indicated in 3.9.

e. Radiograph and report retention, if applicable (see 3.8.3).

f. Test reports when required.

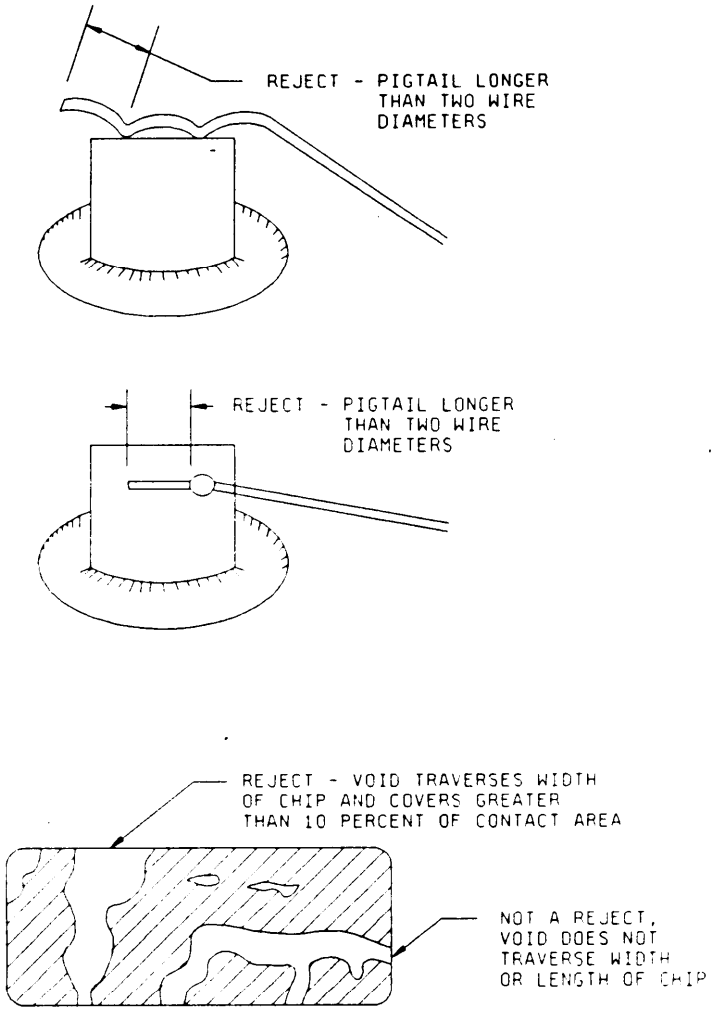

FIGURE 2076-1. Acceptable and unacceptable voids and excessive pigtalls.

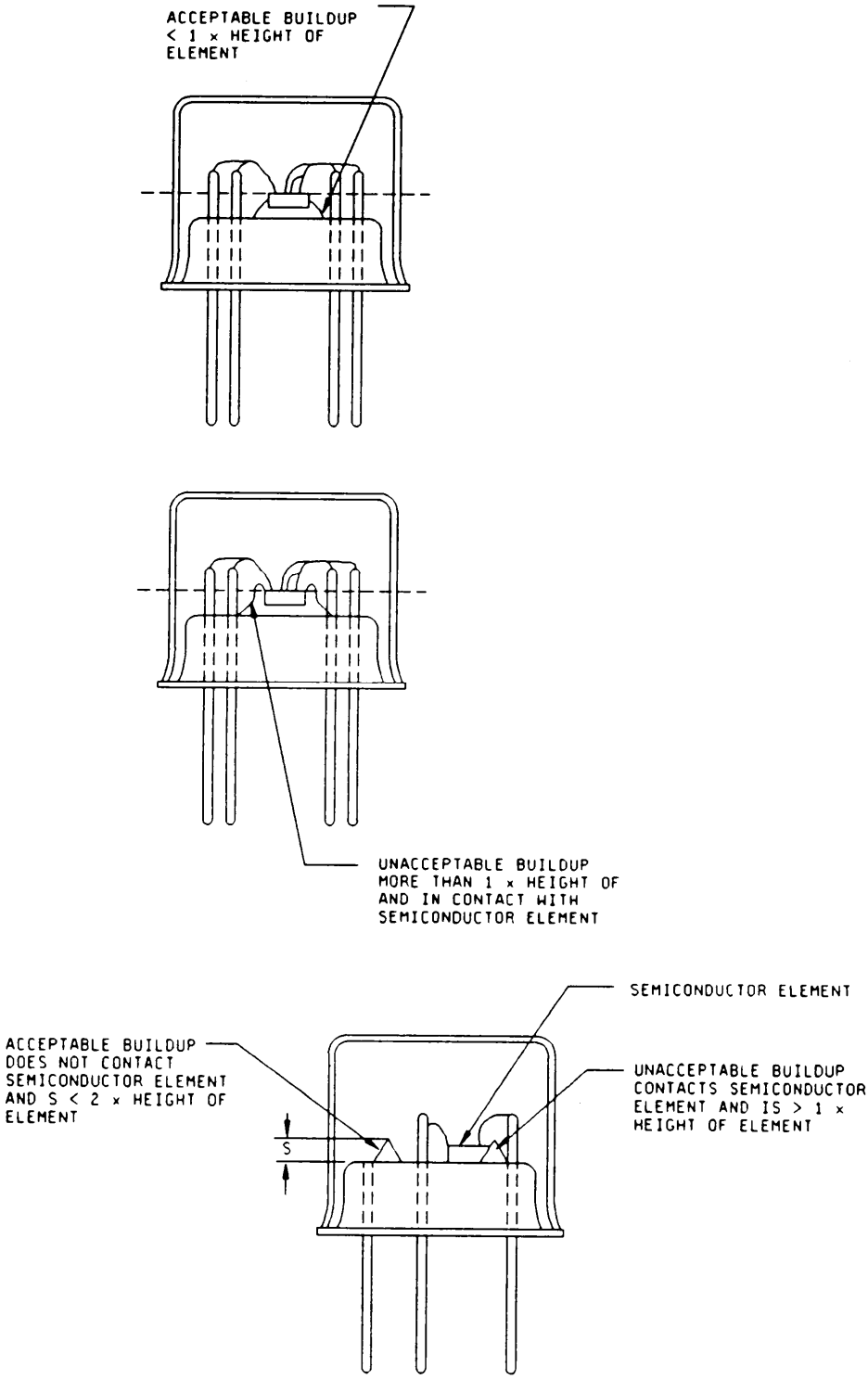

FIGURE 2076-2. Acceptable and unacceptable bonding material build-up.

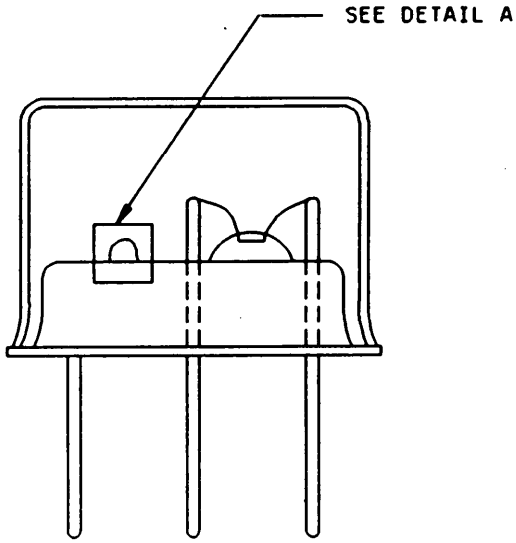

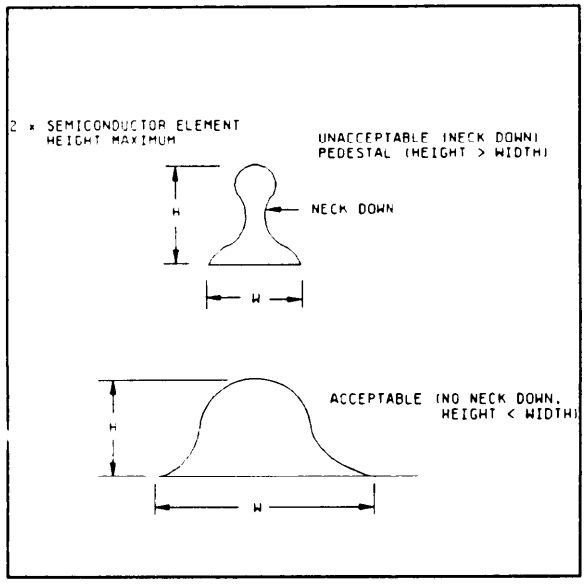

DETAIL A

NOTE: Die and wire are not necessarily visible.

FIGURE 2076-3. Extraneous bonding material build-up.

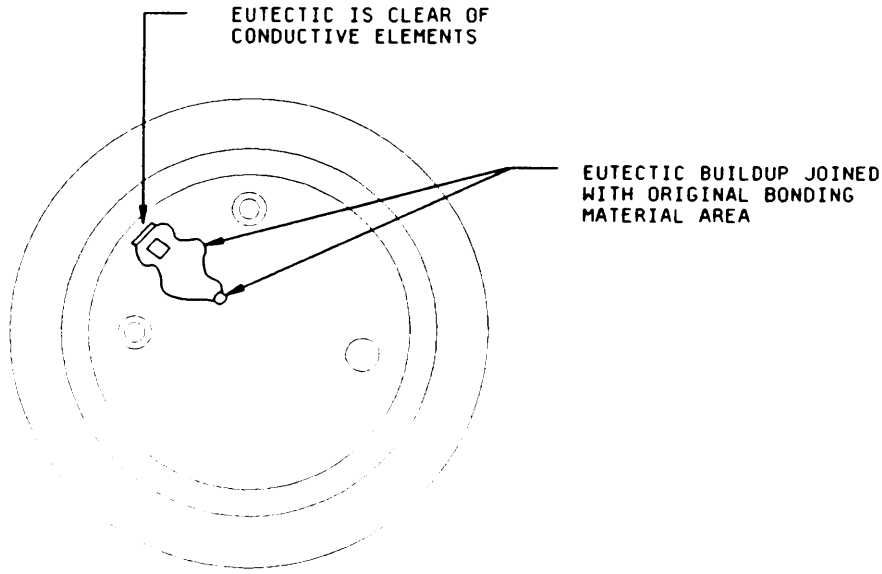

ACCEPTABLE

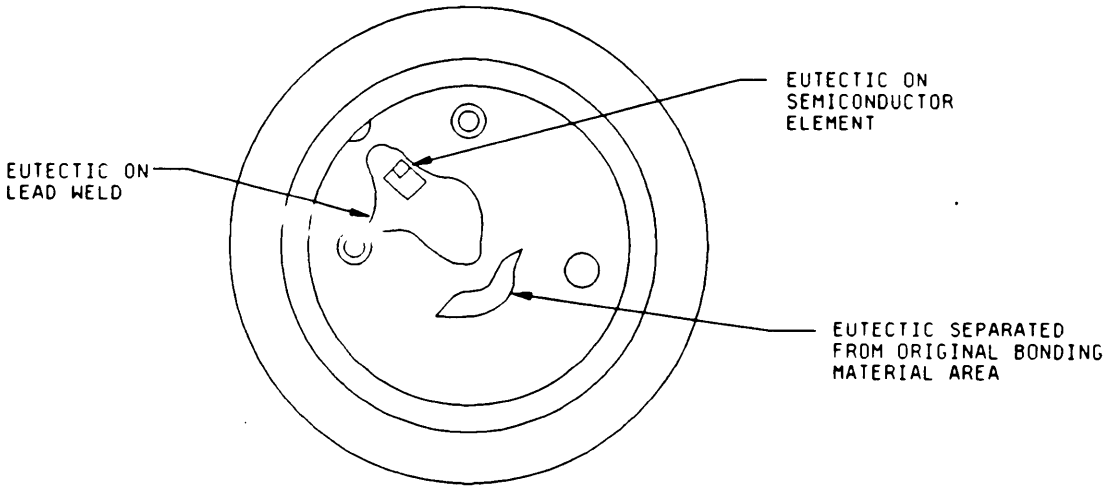

UNACCEPTABLE

FIGURE 2076-4. Acceptable and unacceptable excess material.

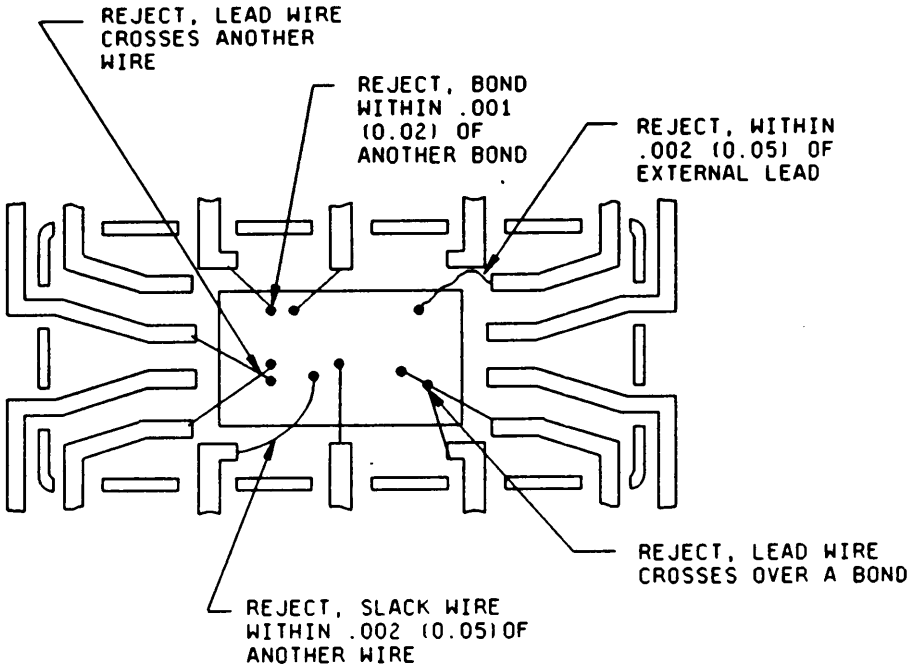

FIGURE 2076-5. Clearance in dual-in-line or flat pack type device.

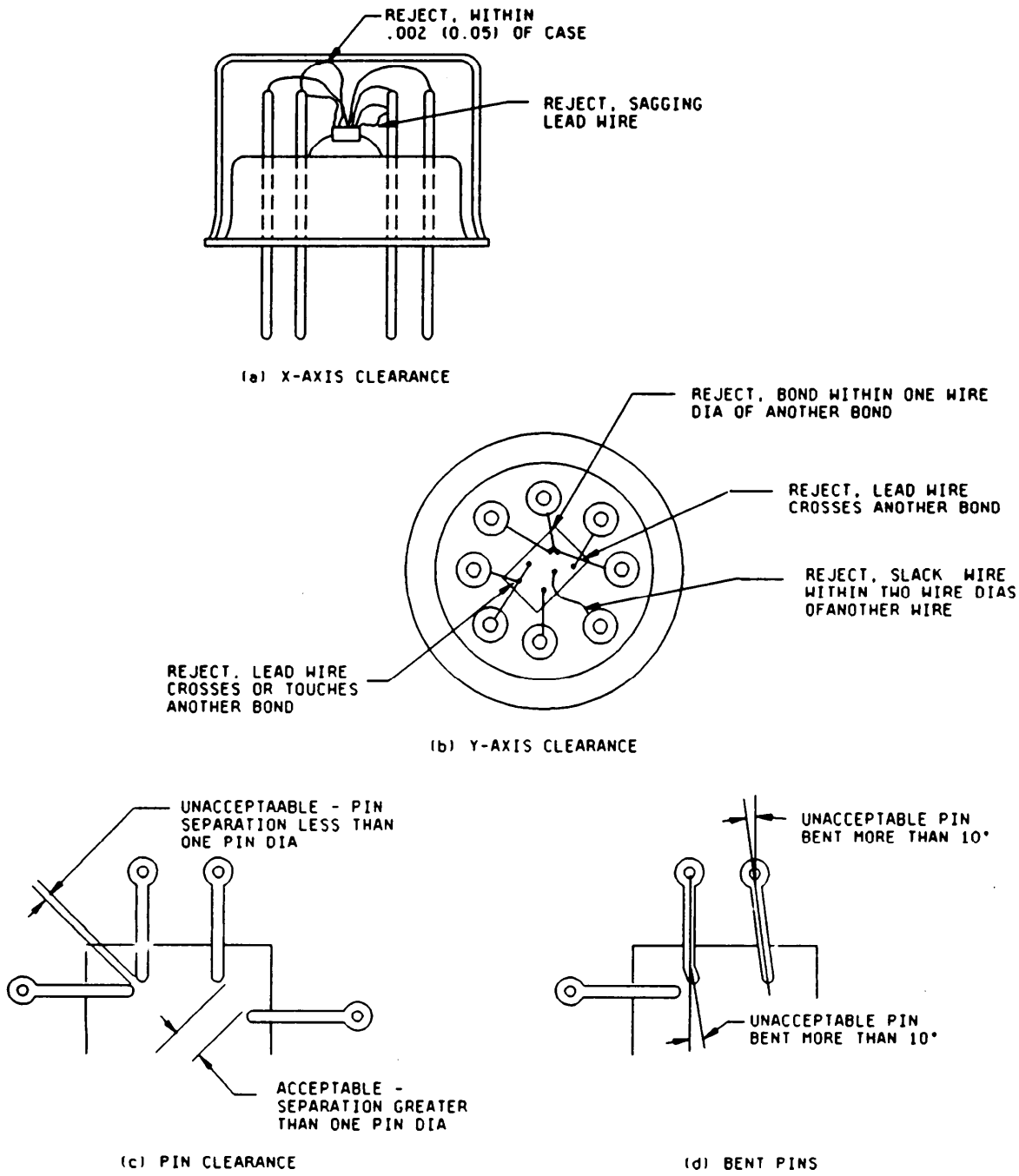

FIGURE 2076-6. Clearance in round or box transistor type device.

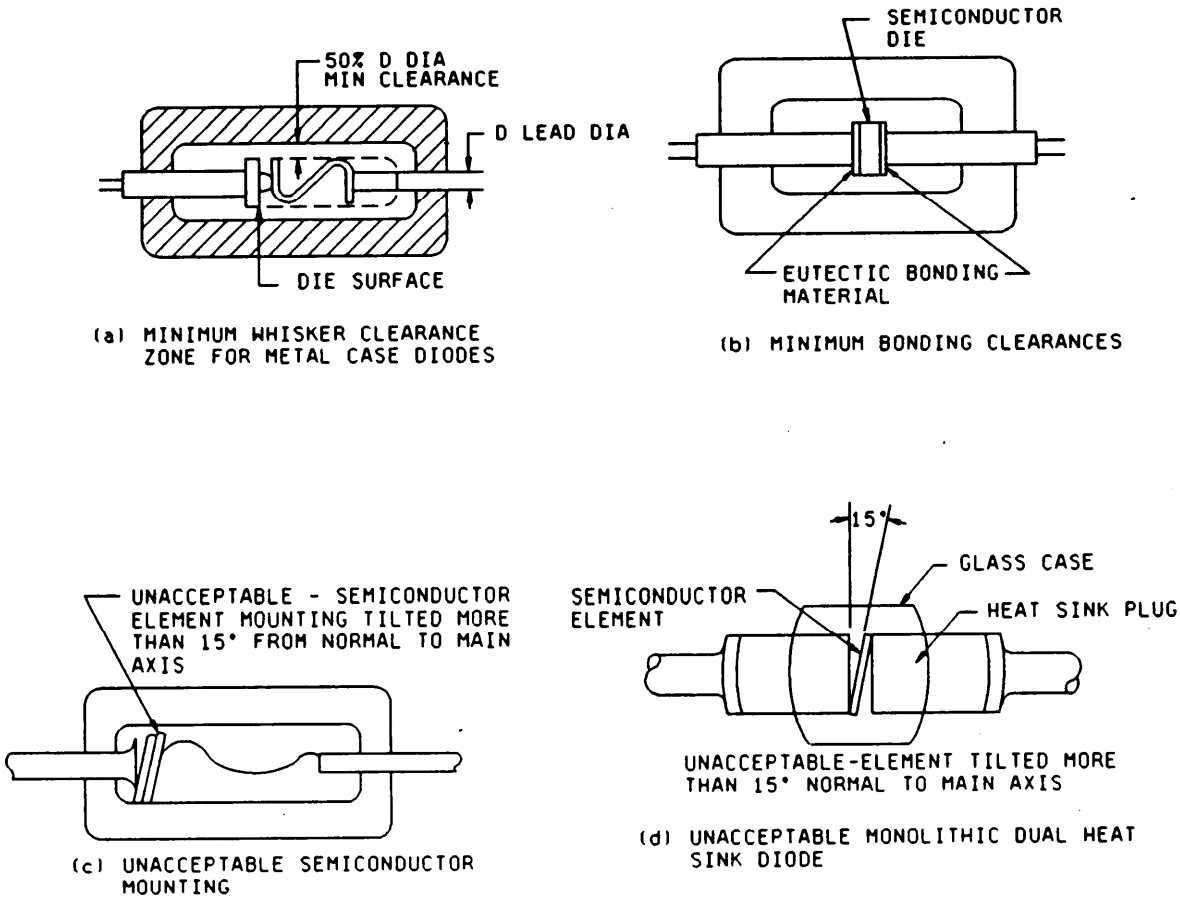

FIGURE 2076-7. Clearance in cylindrical axial lead type device.

METHOD 2077.3

SCANNING ELECTRON MICROSCOPE (SEM) INSPECTION OF METALLIZATION

1. Purpose. This method provides a means of judging the quality and acceptability of metallization on semiconductor dice. It addresses the specific metallization defects that are batch process oriented and which can best be identified utilizing this method. It should not be used as a test method for workmanship and other type defects best identified using the visual inspection criteria of method 2072. The term "dice" for the purpose of this test method, includes diodes and transistors which have expanded metallization contacts or metallization interconnects.

2. Apparatus. The apparatus for this inspection shall be a SEM having an ultimate resolution of 100 A or less and a variable magnification to at least 20,000x. The apparatus shall be such that the specimen can be tilted to a viewing angle (see figure 2077-1) of 60° or greater, and can be rotated through 360°. Evidence of using competent SEM operating personnel as well as acceptable techniques and equipment that meet the requirements of this method shall be demonstrated for the approval of the qualifying activity or, when applicable, a designated representative of the acquiring activity.

3. Procedure.

3.1 Sample selection. Proper sampling is an integral part of this test method. Statistical techniques, using random selection, are not practical here because of the large sample size that would be required. This test method specifies means of minimizing test sample while maintaining confidence in test integrity by designating for examination wafers in specific locations on the wafer holder(s) in the metallization chamber, and specific dice on the wafers. These dice are in typical or worst case positions for the metallization configuration. Dice selected for SEM examination shall not be immediately adjacent to the wafer edge, and they shall be free of smearing or inking, since this could obscure processing faults for which they are to be inspected. Metallization acceptance shall be based on examination of sample dice, using either a single wafer acceptance basis or a process lot acceptance basis. A process lot is a batch of wafers which has been received together those common processes which determine the slope and thickness of the oxide step and which have been metallized as a group.

3.1.1 Sampling condition A. unglassivated devices. This sampling condition applies to devices which have no glassivation over the metallization. Steps 1 and 2, which follow, both apply when acceptance is on a lot acceptance basis. Only step 2 applies when acceptance is on a single wafer acceptance basis.

3.1.1.1 Step 1: Slice selection. From each lot to be examined on a lot acceptance basis, wafers shall be selected from the designated positions on the wafer holder(s) in the metallizing chamber. In accordance with the definition of lot in 3.1, if there is more than one process lot in a metallization chamber, each process lot shall be grouped approximately in a separate sector within the wafer holder, and a separate set of wafers shall be selected for each process lot being examined on a lot acceptance basis. Table 2077-1 and figure 2077-2 specify the number and sites of wafers to be selected. Dice selection from the selected wafers shall be in accordance with the sampling plan established for a single wafer in step 2 (see 3.1.1.2).

3.1.1.2 Step 2: Dice selection. When a wafer is to be evaluated (for acceptance on a single wafer basis, or with one or more wafers on a lot acceptance basis), either of the following sampling conditions may be used at the manufacturer's option.

3.1.1.2.1 Sampling condition A_1: Quadrants. Immediately following the dicing operation (e.g., scribe and break, saw, etch) and before relative die location on the wafer is lost, four dice shall be selected. The positions of these dice shall be near the periphery of the wafer and approximately 90° apart (see figure 2077-2).

3.1.1.2.2 Sampling conditional: Segment. After completion of all processing steps and, prior to dicing, two segments shall be separated from opposite sides of each wafer to be examined. These segments shall be detached along a chord approximately one-third of the wafer radius in from the edge of the wafer. One die from near each end of each segment (i.e., four dice) shall then be subjected to SEM examination.

TABLE 2077-1. Wafer sampling procedures.

Metallization chamber configuration	Number of process lots in chamber 1/	Required number of samples in accordance with process lot		Sampling plan in accordance with process lot
		Evaporation	Sputtering	
Projected plane view of the wafer holder is a circle. Wafer holder is stationary or "wobbulates".	1	5	2	Four from near the periphery of the wafer holder and 90° apart. One from the center of the holder. See figure 2077-2a.
	2	3, 4, or 5	2	See figures 2077-2b or 2077-2c.
	3	3 or 4	2	See figure 2077-2d.
	4	3	2	See figure 2077-2e.
Wafer holder is symmetrical (i.e, circular, square). Deposition source(s) is above or below the wafer holder. Wafer holder rotates about its center during deposition.	1, 2, 3, or 4	2	2	For each process lot, one from the periphery of the wafer holder, and from close proximity to the center of rotation. See figure 2077-2f.
Planetary system. One or more symmetrical wafer holders (planets) rotate about their own axes while simultaneously revolving about the center of the chamber. Deposition source(s) is above or below the wafer holders.	1, 2, 3, or 4 per planet	2	2	For each process lot, one from near the periphery of a planet, and one from near the center of the same planet. 2/ See figure 2077-2f.

1/ If there is more than one process lot in a metallization chamber, each process lot shall be grouped approximately in a separate sector within the wafer holder. A sector is an area of the circular wafer holder bounded by two radii and the subtended arc; quadrants and semicircles are used as examples on figure 2077-2.

2/ Sample wafers need to be selected from only one planet if all process lots contained in the chamber are included in that planet. Otherwise, sample wafers of the process lot(s) not included in that planet shall be selected from another planet(s).

NOTE: If a wafer holder has only one circular row, or if only one row is used on a multi-rowed wafer holder, the total number of a specified sample wafers shall be taken from that row.

3.1.2 Sampling condition C: Glassivated devices. This sampling condition applies to devices which have glassivation over the metallization. Steps 1 and 2, which follow, both apply when acceptance is on a lot acceptance basis. Only step 2 applies when acceptance is on a single wafer acceptance basis.

3.1.2.1 Step 1: Wafer selection. From each lot to be examined on a lot acceptance basis, wafers shall be selected from the designated positions on the wafer holder in the metallizing chamber. In accordance with the definition of lot in 3.1, if there is more than one process lot in a metallization chamber, each process lot shall be grouped approximately in a separate sector within the wafer holder, and a separate set of wafers shall be selected for each process lot being examined on a lot acceptance basis. Table 2077-1 and figure 2077-2 specify the number and sites of wafers to be selected. Dice selection from the selected wafers shall be in accordance with the sampling plan established for a single wafer in step 2 (see 3.1.2.2.).

3.1.2.2. Step 2: Dice selection. When a wafer is to be evaluated (for acceptance on a single wafer acceptance basis, or with one or more other wafers on a lot acceptance basis), any of the following sampling conditions may be used at the manufacturer's option.

3.1.2.2.1 Sampling conditional: Quadrants. This is the recommended condition for glassivated devices. Immediately following the dicing operation (i.e., scribe and break, saw, etch) and before relative die location on the wafer is lost; four dice shall be selected. The positions of these dice shall be near the periphery of the wafer and approximately 90° apart. The glassivation shall then be removed from the dice using a suitable etch. It is recommended that the etchant used have an etch rate for the glassivation which is approximately 200 times that for the metallization. The dice shall be periodically examined during glass removal using a bright field metallurgical microscope to determine when all the glassivation has been removed and to minimize the possibility of etching the metallization.

3.1.2.2.2 Sampling condition B_2: Segment, prior to glassivation. This sampling condition may be used only if the glassivation processing temperature is lower than +400°C. Two segments shall be separated from opposite" sides of each wafer to be examined immediately before the glassivation coating operation; i.e., subsequent to metallization, etching, and sintering, but before glassivation. These segments shall be detached along a chord approximately one-third of the wafer radius in from the edge of the wafer. One die from near each end of each segment (i.e., four dice) shall be subjected to SEM examination.

3.1.2.2.3 Sampling condition B_3: Segment, after glassivation. Two segments shall be separated from opposite sides of each wafer subsequent to sintering and glassivation. These segments shall be detached along a chord approximately one-third of the wafer radius in from the edge of the water. The glassivation shall then be removed from the segment using a suitable etch (see 3.1.2.2.1 for the etch rate). The segment shall be periodically examined using a bright field metallurgical microscope to determine when all the glassivation has been removed and to minimize the possibility of etching the metallization. One die from near each end of each segment (i.e., four dice) shall be subjected to SEM examination.

3.2 Lot control during SEM examination. After dice sample selection for SEM examination, the manufacturer may elect either of two options.

3.2.1 Option 1. The manufacturer may continue normal processing of the lot with the risk of later recall and rejection of product if SEM inspection, when performed, shows defective metallization. If this option is elected, positive control and recall of processed material shall be demonstrated by the manufacturer by having adequate traceability documentation.

3.2.2 Option 2. Prior to any further processing, the manufacturer may store the dice or wafers in a suitable environment until SEM examination has been completed and approval for further processing has been granted.

3.3 Specimen preparation. Specimens shall be mounted in an appropriate manner for examination. Suitable caution shall be exercised in the use of materials such as conducting paints and adhesives for specimen mounting so that important features are not obscured. Specimens may be examined without any special coating to facilitate SEM examination if the required resolution can be obtained, or they may be coated with a vapor-deposited or sputtered film of a suitable conductive material. If the specimens are coated, thickness or quality of the coatings shall be such that no artifacts are introduced.

3.4 Specimen examination, general requirements. The metallization on all four edge directions shall be examined on each die for each type of contact window step and for each other types of oxide steps (see table 2077-II) (oxide refers to any insulating material used on the semiconductor die, whether S_iO_x or S_iN_x). A single window (or other type of oxide step) may be viewed if metallization covers the entire window (or other type of oxide step) extending up to and over each edge and onto the top of the oxide at each edge. Other windows (or other types of oxide steps) on the die shall be examined to meet the requirement that all four directional edges of each type of window (or other type of oxide step) shall be examined on each die. General metallization defects, such as peeling and voids, shall be viewed to provide for the best examination for those defects.

TABLE 2077-11. Examination procedure for sample dice.

Device type	Area of examination	Examination	Minimum - maximum magnification	Photographic documentation 1/
3.5.1 Expanded contact bipolar and power FET's	Oxide step 2/ (contact windows and other types of oxide steps)	All	4,000x to 20,000x	Two of the worst case oxide steps.
	General metallization 3/	All	1,000x to 6,000x	Worst case general metallization.

1/ See 3.8 (an additional photograph may be required).

2/ Scanning examination shall include all four directional edges of oxide steps (documentation need only show the worst case). Oxide steps include contact windows (emitters, bases, collectors, drains, sources, diffused resistors) and other types (e.g., diffusion cuts for emitters, bases, collectors; and field oxide steps). See 3.7.1 for accept/reject criteria.

3/ See 3.7.2 for accept/reject criteria.

NOTE: For multi-layered-meta[interconnection systems, see 3.5.3 and 3.7.3. Window coverage also shall be examined.

3.4.1. Viewing angle. Specimens shall be viewed at an appropriate angle to accurately assess the quality of the metallization. Contact Windows are normally viewed at an angle of 45° to 60° or greater (see figure 2077-1).

3.4.2. Viewing direction. Specimens shall be viewed in an appropriate direction to accurately assess the quality of the metallization. This inspection shall include examination of metallization at the edges of contact windows and other types of oxide steps (see 3.4) in any direction that provides clear views of each edge and that best displays any defects at the oxide step. The viewing direction may be perpendicular to an edge, parallel with an edge, or at some oblique angle.

3.4.3 Magnification. The magnification ranges shall be between 4,000x and 20,000x for examination of oxide steps and between 1,000x and 6,000x for general metallization defects, such as peeling and voids (refer to table 2077-11). When dice are subjected to reinspection, such reinspection shall be accomplished at any magnification within the specified magnification.

3.5 Specimen examination detail requirements.

3.5.1. Expanded contact bipolar. Examination shall be as specified herein and summarized in table 2077-11.

3.5.1.1 Oxide steps. Inspect the metallization at all types of oxide steps (see table 2077-11) and document in accordance with 3.8.

3.5.1.2 General metallization. Inspect all general metallization on each die for defects such as peeling and voids. Document in accordance with 3.8.

3.5.2 Power FET's. Examination shall be specified herein and summarized in table 2077-11.

3.5.2.1 Oxide steps. Inspect the metallization at all types of oxide steps (see table 2077-11) and document in accordance with 3.8. For RF or power transistors with interdigitated or mesh structures, each base-emitter stripe pair within each pattern shall be inspected as a minimum. Particular attention shall be directed to lateral etching defects and undercut at base and emitter oxide steps. Documentation shall be as specified in 3.8.

3.5.2.2 General metallization. Inspect all general metallization on each die for defects such as peeling and voids. Document in accordance with 3.8.

3.5.3 Multi-layered metal interconnection systems. Multi-layered metal is defined as two or more layers of metal or any other material used for interconnections. Each layer of metal shall be examined. The principal current-carrying layer shall be examined with the SEM; the other layers (for example, barrier or adhesion) may be examined using either the SEM or an optical microscope, at the manufacturer's option. Accept/reject criteria for multi-layered metal systems are given in 3.7.3. The glassivation (if any) and each successive layer of metal shall be stripped by selective etching with suitable reagents, layer-by-layer, to permit the examination of each layer. If it is impractical to remove the metal on a single die layer-by-layer, one or more dice immediately adjacent to the original die shall be etch so that all layers shall be exposed and examined. Specimen examination shall be in accordance with 3.5.1.

3.6 Acceptance requirements.

3.6.1. Single slice acceptance basis. The metallization of a wafer shall be judged acceptable only if all sample dice from that wafer are acceptable.

3.6.2 Lot acceptable basis. An entire lot shall be judged acceptable only when all sample dice from all sample wafers are acceptable. At the manufacturer's option, if a lot is rejected in accordance with this paragraph, each wafer from that lot may be individually examined. Acceptance shall then be in accordance with 3.6.1.

3.7 Accept/reject criteria. Rejection of dice shall be based upon batch process oriented defects. Rejection shall not be based upon workmanship and other type defects such as scratches, smeared metallization, tooling marks. In the event that the presence of such defects obscures the detailed features being examined, an additional die shall be examined which is immediately adjacent to the die with the obscured metallization. Illustrations of typical defects are shown on figure 2077-4 through figure 2077-32.

3.7.1 Oxide steps. The metallization on all four directional edges of every type of oxide steps (contact window or other type of oxide step) shall be examined (see 3.4.2). The metallization shall be unacceptable if thinning and one or more defects such as voids, separations, notches, cracks, depressions, or tunnels reduce the cross-sectional area of the metal at the directional edge to less than 50 percent of metal cross-sectional area on either side of the directional edge. b/hen less than 50 percent, for the metallization to be acceptable, all four directional edges shall be covered with metallization (see 3.4.2) and shall be acceptable except in the cases described in 3.7.1.1 and 3.7.1.2.

3.7.1.1 Oxide steps without metallization. In the event that a directional edge profile of a particular type of oxide step cannot be found which is covered with metallization (see 3.4.2) and therefore, a judgement of the quality of the metallization at that directional edge profile cannot be made, this shall not be cause for rejection if:

a. It is established that the edge profile from which metal is absent does not occur in a current-carrying direction, such determination being made either by scanning all oxide steps of this type on the balance of the die, or by examination of a topographical map supplied by the manufacturer which shows the metal interconnect pattern, and;

b. Duplicate sample wafers are examined, these duplicates being located adjacent to the original sample wafers, in the wafer holder, and being rotated so as to be oriented approximately 180° with respect to the original sample wafers during metallization. If the conditions of both a. and b. are met, a lot acceptance basis may be used. If only condition a is met, a single wafer acceptance basis must be used.

3.7.1.2 Oxide steps with less than 50 percent metallization. If less than the specified percent of the metallization is present at a particular directional edge profile (see figure 2077-3), wafer lot rejection shall not be invoked if:

a. It is established that the edge profile from which metal is absent does not occur in a current-carrying direction, such determination being made either by seaming all oxide steps of this type on the balance of the die, or by examination of a topographical map supplied by the manufacturer which shows the metal interconnect pattern;

b. Acceptance is on a wafer basis only, and;

c. The device is a power FET, no less than 30 percent of the metallization is present and the maximum calculated current density does not exceed the value which corresponds to the applicable conductor material in accordance with table 2077-111.

TABLE 2077-111. Conductor material.

Conductor material	Maximum allowable continuous current density (RMS for pulse applications)
Aluminum (99.99 percent pure or doped) without glassivation	2×10^5 amps/cm^2
Aluminum (99.99 percent pure or doped) with glassivation	5×10^5 amps/cm^2
Gold	6×10^5 amps/cm^2
All other (unless otherwise specified)	2×10^5 amps/cm^2

3.7.2 General metallization. General metallization is defined for the purpose of this test method as the metallization at all locations except at oxide steps, and shall include metallization (stripes) in the actual contact window regions. Any metallization pulling or lifting (lack of adhesion) shall be unacceptable. Any defects, such as voids which reduce the cross-sectional area of the metallization stripe by more than 50 percent shall be unacceptable.

3.7.3 Multi-layered metal interconnection systems. These systems may be more susceptible to undercutting than single-layered metal systems and shall, therefore, be examined carefully for this type of defect, in addition to the other types of defects. Refer to 3.5.3 for specimen examination requirements and definition of multi-layered metal systems.

3.7.3.1 Oxide steps. Criteria of 3.7.1 shall apply to both the principal conducting metal and the barrier layer. If by design, a barrier layer is not intended to cover the oxide steps, 3.7.1 shall not apply to the barrier layer.

3.7.3.1.1 Barrier or adhesion layer as a nonconductor. When a barrier or adhesion layer is designed to conduct less than ten percent of the total current, this layer must be considered as only a barrier or adhesion layer. Consequently, this barrier or adhesion barrier layer shall not be used in current density calculations and shall not be required to satisfy the step coverage requirements. The barrier or adhesion layer shall be required to cover only these regions where the barrier function is designed with the manufacturer providing suitable verification of this function. The thickness of the barriel or adhesion layer shall not be permitted to be added to the thickness of the principal conducting layer when estimating the percentage metallization step coverage. Therefore, the principal conducting layer shall satisfy the percentage step coverage by itself.

3.7.3.2 General metallization. Criteria of 3.7.2 shall apply here only for the principal conducting metal layer. Other metal layers (nonprincipal conducting layers such as barrier or adhesion layers) may be, examined with the SEM, or with an optical microscope, the choice of equipment being at the manufacturer's option. Two specific-cases of general metallization are considered. In the examination of other metal layers for the specific case of interconnection stripes (i.e., exclusive of contact window area), a defect consuming 100 percent of the cross-sectional area of the strip shall be acceptable provided the length of that defect is not greater than the width of the metallization strip (see figure 2077-22). For the specific case of contact window area metallization, at least 70 percent of the contact window area must be covered by the principal metal layer and any underlying metal layer(s); for the metal layer(s) above the principal conducting layer in the contact window area, a defect consuming 100 percent of the cross-sectional area of the metallization strip shall be acceptable provided the length of that defect is not greater than the width of the stripe. In the examination of the specific case of contact window area metallization for multi-metal systems, at least one of each type of contact window present shall be examined.

3.8 Specimen documentation requirements. After examination of dice from each wafer, a minimum of three photographs per lot shall be taken and retained. Two photographs shall be of worst case oxide steps and the third photograph of worst case general metallization. If any photograph show another apparent defect within the field of view, another photograph shall be taken to certify the extent of that apparent defect (see table 2077-11).

3.8.1 Required information. The following information shall be traceable to each photograph:

a. Manufacturer's lot identification number.

b. SEM operator/inspector's identification.

c. Date of SEM photograph.

d. Manufacturer.

e. Device/circuit identification (type or PIN).

f. Area of photographic documentation.

g. Magnification.

h. Electron beam accelerating voltage.

i. Viewing angle.

3.9 Control of samples. SEM samples may not be shipped in any manner as functional devices.

4. Summary. The following conditions shall be specified in the applicable acquisition document:

a. Single slice acceptance basis when required by the acquiring activity.

b. Requirements for photographic documentation (number and kind) if other than as specified in 3.8.

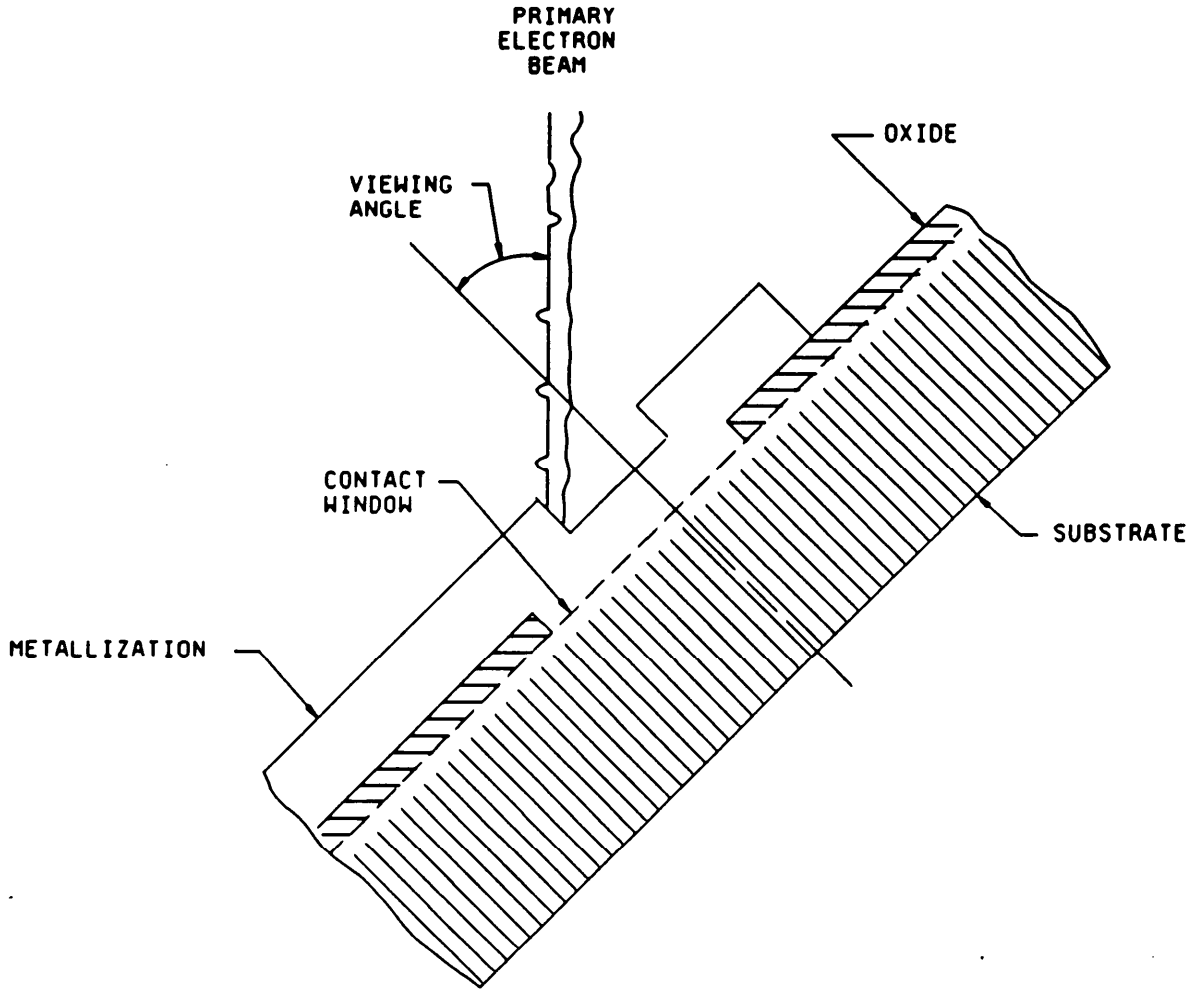

FIGURE 2077-1. Viewing angle.

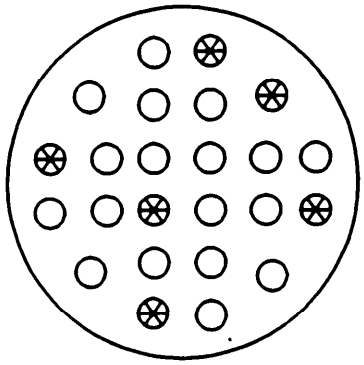

A. One diffusion lot

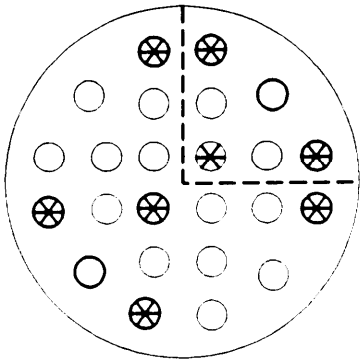

b. Two diffusion lots. one lot considerably larger than the other

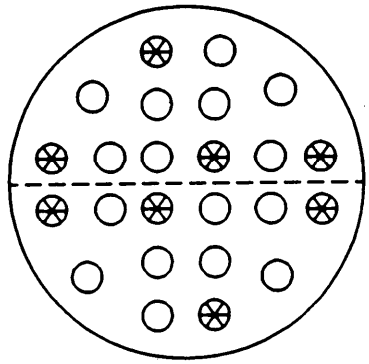

c. Two diffusion lots. approximately equal in size

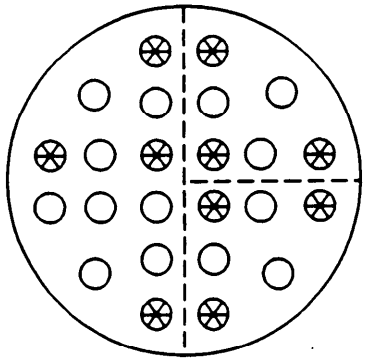

D. Three diffusion lots

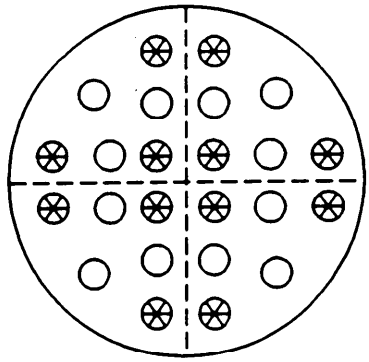

E. Four diffusion lots

FIGURE 2077-2. Wafer sampling procedures (refer to table 2077-II).

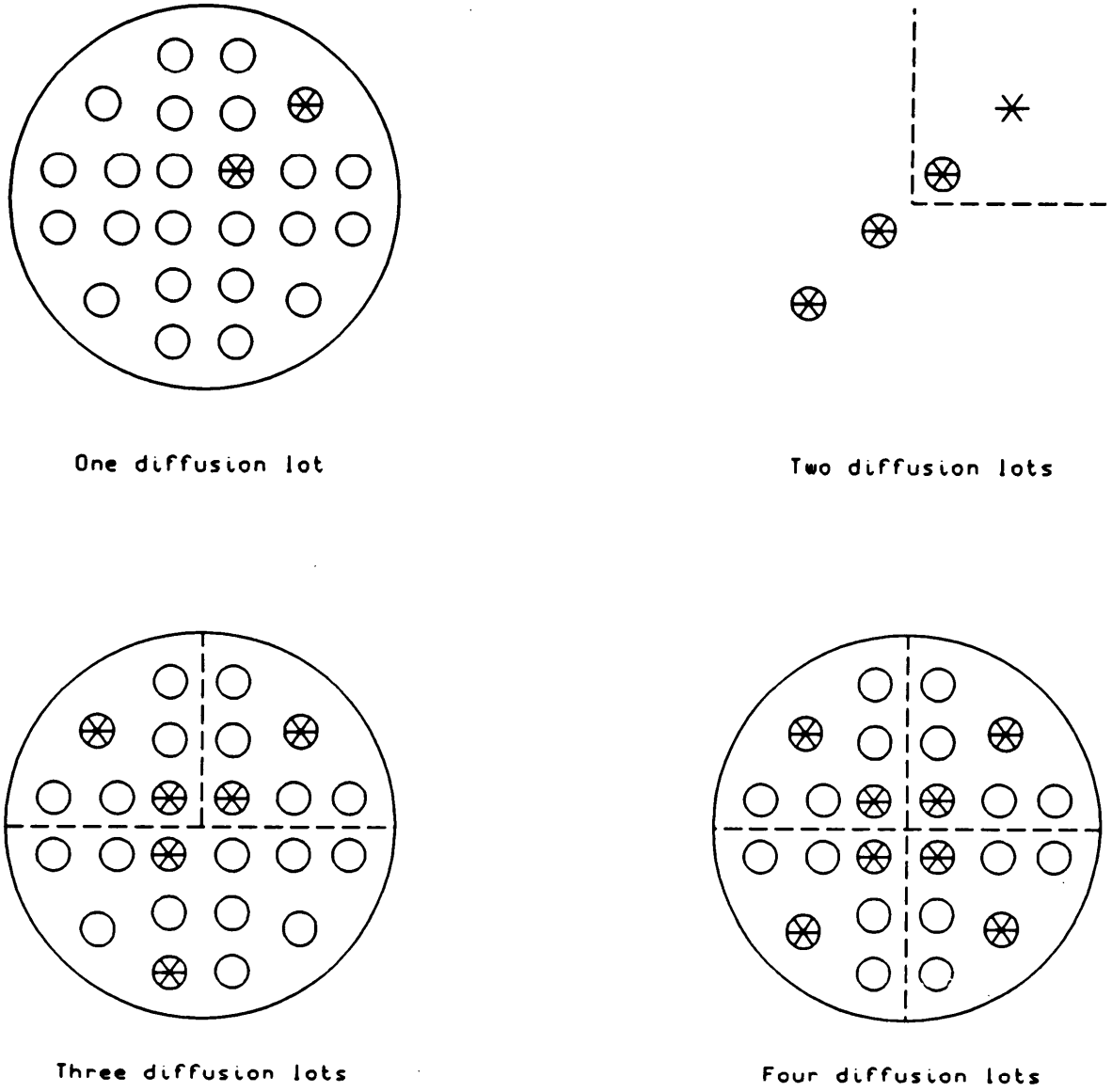

f. Rotating and planetary systems.

FIGURE 2077-2. Wafer sampling procedures (refer to table 2077-II) - Continued.

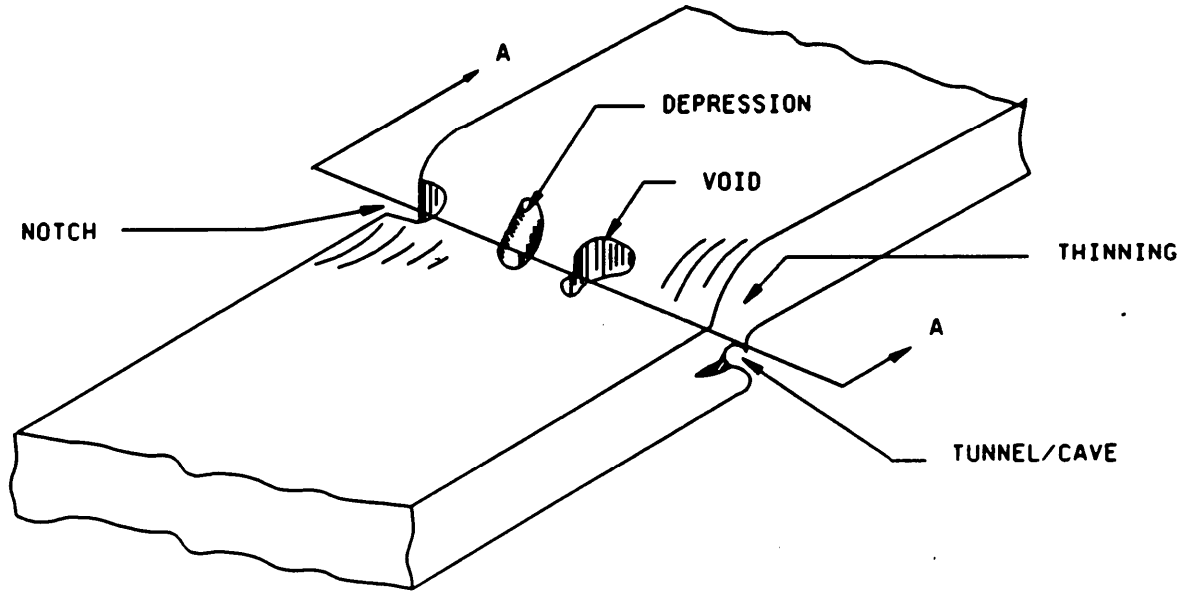

METALLIZATION AT OXIDE
STEP SHOWING TYPICAL DEFECTS

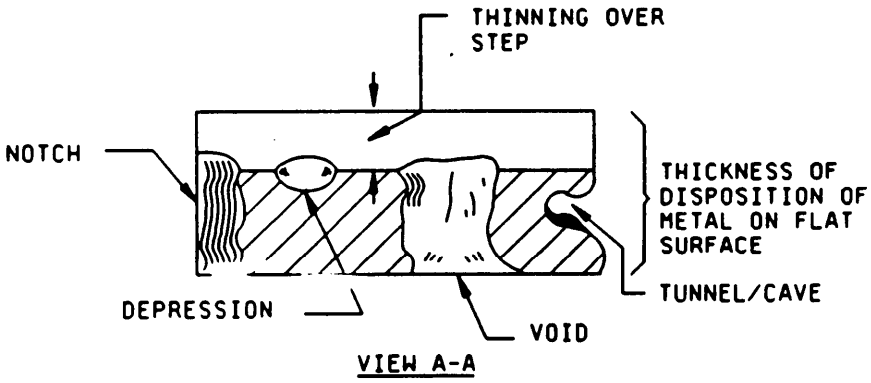

CROSS-SECTION AREA (ENLARGED) OF METALLIZATION
AT OXIDE STEP SHOWN ABOVE

FIGURE 2077-3. Concept of reduction of cross-sectional area of metallization as accept/reject criteria (any combination of defects and thinning over a step which reduces the cross-sectional area of the metal to less than 50 percent of metal cross-sectional area as deposited on the flat surface, is cause for rejection).

FIGURE 2077-4. (6,000x) Void near oxide step (accept).

FIGURE 2077-5. (3,300x) Voids at oxide step (reject).

FIGURE 2077-6. (8,000x) Voids at contact (reject).

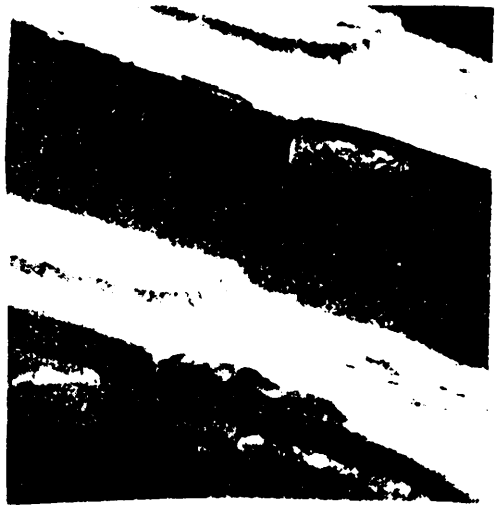

NOTE: Tunnel does not reduce cross-sectional area more than 50 percent.

FIGURE 2077-7. (10,000x) Tunnel/cave at oxide step (accept).

FIGURE 2077-8. (14.000x) Tunnel/cave at oxide step (reject).

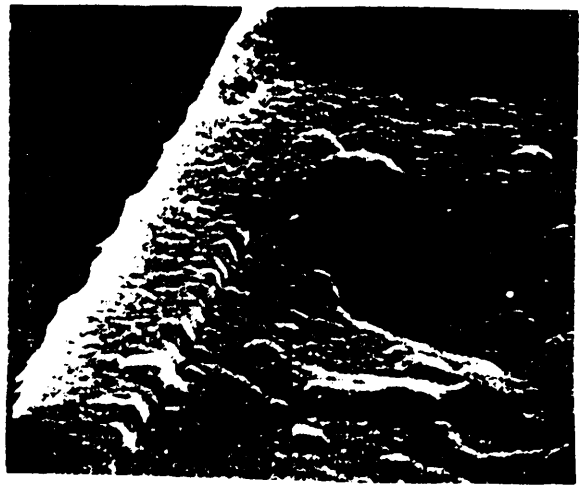

FIGURE 2077-9. (10,000x) Separation of metallization at oxide step (base contact) (accept).

FIGURE 2077-10. (7,000x) Separation of metallization at contact step (reject).

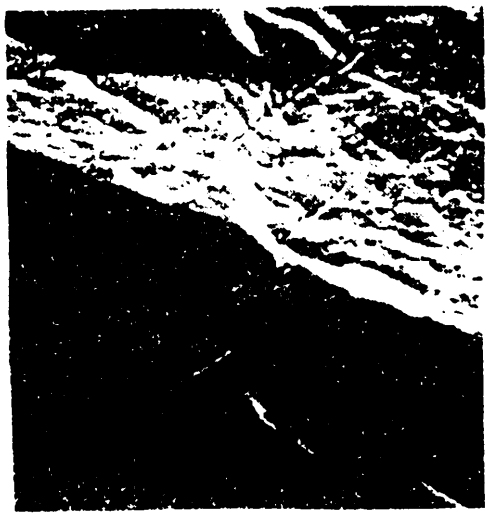

FIGURE 2077-11. (20,000x) Crack-like defect at oxide step (accept).

FIGURE 2077-12. (7,000x) Crack-like defect at oxide step (reject).

FIGURE 2077-13. (7,200x) Thinning at oxide step with more than 50 pecent of cross-sectional area remaining at step (multi-level-metal) (accept).

FIGURE 2077-14. (7,200x) Thinning at oxide step with less than 50 percent of cross-sectional area remaining at step (multi-level-metal) (reject).

FIGURE 2077-15. (6.000x) Steep oxide step (MOS) (accect).

FIGURE 2077-16. (9,500x) Steep oxide step (MOS) (reject).

FIGURE 2077-17. (1,000x) Peelin9 or lifting of contact metallization (reject).

FIGURE 2077-18. (5,000X) Peeling or lifting of general metallization in contact window area (reject).

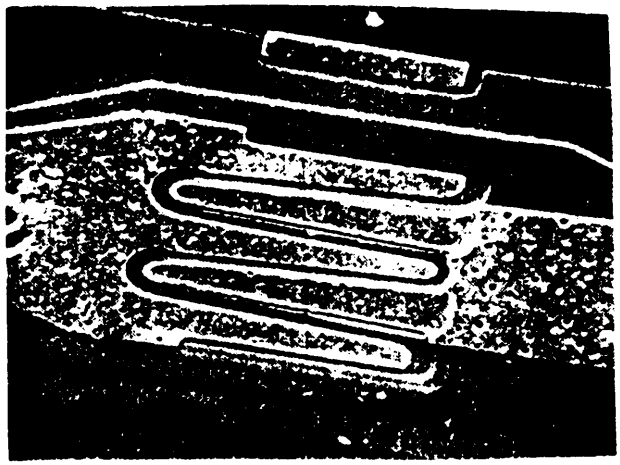

FIGURE 2077-19. (10,000x) General metallization voids (accept).

FIGURE 2077-20. (5,000x) General metallization voids (reject).

FIGURE 2077-21 . (5,000x) Etch-back/undercut type of notch at oxide step (multi-layered-metal) (accept).

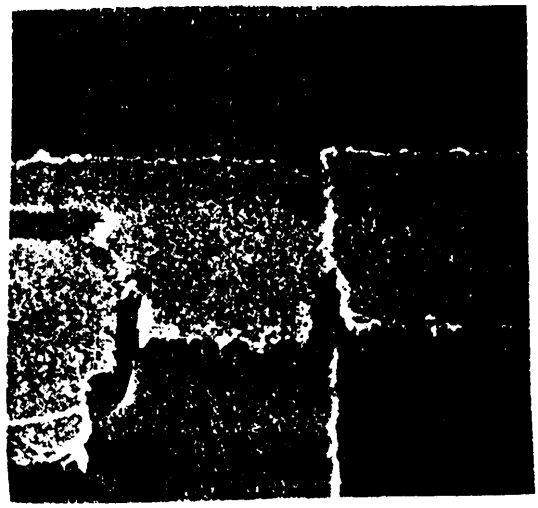

FIGURE 2077-22. (5,000x) Barrier or adhesion layer etch-back/undercut type of notch at oxide step (multi-layered-metal) (accept).

FIGURE 2077-23. (11,000x) Shorting/bridging between adjacent metallization areas (reject).

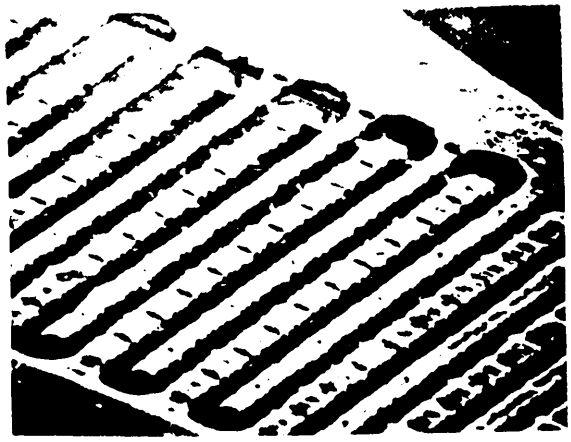

FIGURE 2077-24. (1,000x) Metallization (microwave device), coverage and alignment good (accept).

FIGURE 2077-25. (6,000x) Metallization (microwave device) (accept).

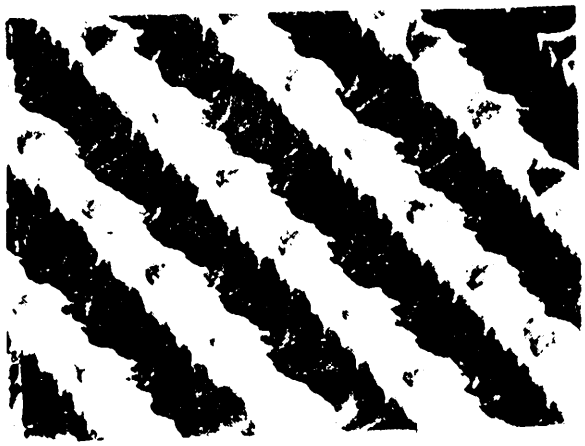

FIGURE 2077-26. (5,000x) Metallization (400 MHz device) (accept).

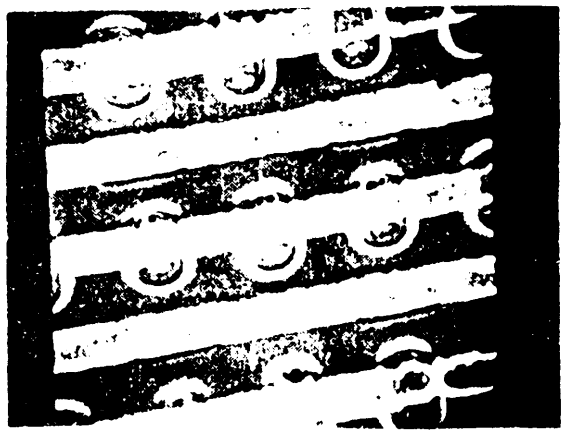

FIGURE 2077-27. (2,000x) Aluminum discontinuities at base contact dielectric steps - unacceptable base contact and emitter contact coverage microwave device (reject).

FIGURE 2077-28. (10,000x) Perforated emitter metal finger (microwave device) (reject).

FIGURE 2077-29. (20,000x) Base metal finger narrowing (microwave device) (reject).

FIGURE 2077-30. (5,000x) Metal finger narrowing (4,000 MHz device) (reject).

FIGURE 2077-31. (10,000x) Metal undercut at base contact (microwave device) (reject).

FIGURE 2077-32. (5,000x) Bridging metal and poor base contact coverage (microwave device) (reject).

METHOD 2081

FORWARD INSTABILITY, SHOCK (FIST)

1. Purpose. This test is intended to detect any device discontinuity “ringing” or shifting of the forward dc voltage characteristic monitored during shock.

2. Apparatus. The shock testing apparatus shall be capable of providing shock pulses of the specified peak acceleration and pulse duration to the body of the device. The acceleration pulse, as determined from the unfiltered output of a transducer with a natural frequency greater than or equal to five times the frequency of the shock pulse being established, shall be a half-sine waveform with an allowable distortion not greater than ±2O percent of the specified peak acceleration. The pulse duration shall be measured between the points at 10 percent of the peak acceleration during rise time and at 10 percent of the peak acceleration during decay time. Absolute tolerances of the pulse duration shall be the greater of ±0.6 as or ±15 percent of the specified duration for specified durations of 2 ms and greater. For specified durations less than 2 ms, absolute tolerances shall be the greater of ±0.1 ms or ±3O percent of the specified duration. The monitoring equipment shall be an oscilloscope or any “latch and hold” interrupt detector of appropriate sensitivity.

3. Procedure. The shock-testing apparatus shall be mounted on a sturdy laboratory table or equivalent base and leveled before use. The device shall be rigidly mounted or restrained by its case with suitable protection for the leads. Special care is required to ensure positive electrical connection to the device leads to prevent intermittent contacts during shock. The device shall be subjected to five shock pulses of 1,000 g peak minimum for the pulse duration of 1 ms in each of two perpendicular planes. For each blow, the carriage shall be raised to the height necessary for obtaining the specified acceleration and then allowed to fall. Means may be provided to prevent the carriage from striking the anvil a second time. With the specified dc voltage and current applied, the forward dc characteristic shall be displayed on a oscilloscope swept at 60 Hz and-shall be monitored continuously during the shock test.

4. Failure criteria. During the shock test, any discontinuity, flutter, drift, or shift in oscilloscope trace or any dynamic instabilities shall be cause for rejection of the semiconductor DUT(s).

5. Summary. The following conditions shall be specified in the detail specification:

a. Acceleration and duration of pulse, if other than that specified (see 3.).

b. Number and direction of blows, if other than that specified (see 3.).

c. Electrical-load conditions (see 3.).

METHOD 2082

BACKwARD INSTABILITY, VIBRATION (BIST)

1. Purpose. This test is intended to detect any device discontinuity "ringing" or shifting of the reverse dc voltage characteristic monitored during vibration.

2. Apparatus. The vibration testing apparatus shall be capable of providing the required frequency vibration at the specified levels. The monitoring equipment shall be an oscilloscope or any "latch and hold" interrupt detector of appropriate sensitivity.

3. Procedure. The device shall be rigidly fastened on the vibration platform. Special care is required to ensure positive electrical connection to the device leads to prevent intermittent contacts during vibration. Care must also be exercised to avoid magnetic fields in the area of the device being vibrated. The device shall be vibrated with a simple harmonic motion at 60 ±3 Hz, with .1 inch (2.54 mm) minimum double amplitude displacement for a period of 30 seconds minimum in the X orientation planes (see note). The acceleration shall be monitored at a point where the "g" level is equivalent to that of the support point for the device(s). With the specified dc voltage and current applied (for zeners only) and with the specified reverse dc voltage applied (for diodes and rectifiers only), the reverse dc characteristic shall be displayed on an oscilloscope swept at 60 Hz and shall be monitored continuously during the vibration test.

NOTE: g level calculation:

$g = .0512f^2DA.$

f = frequency in Hz.

DA = double amplitude in inches.

4. Failure criteria. During the vibration test, any discontinuity, flutter, drift, or shift in oscilloscope trace or any dynamic instabilities shall be cause for rejection of the semiconductor DUT.

5. Summary. The following conditions shall be specified in the detail specification:

a. Frequency range and time period, if other than that specified.

b. Peak acceleration, if other than that specified.

c. Orientation plan, if other than that specified.

d. Voltage and lead conditions.

METHOD 2101.1

DPA PROCEDURES FOR DIODES

1. Purpose. This method describes detail procedures and evaluation guidelines for the destructive physical analysis (DPA) of commonly specified diodes. It is intended to provide techniques for determining compliance with specified construction requirements, as well as for evaluating processes, workmanship, and material consistency of the product in relation to MIL-S-19500 requirements.

2. Scope. This method pertains to all diode constructions including metal can, except where the die is encapsulated in a package normally specified for transistors. Diodes in transistor packages shall be evaluated using method 2102.

3. Sampling Sampling for DPA shall be as specified in the applicable diode detail specification or acquisition procedure requirements, by contract. Destructive analysis shall be totally compliant with the detail specification for electrical and mechanical requirements or as otherwise specified in the acquisition requirements.

4. Procedure. The DPA samples shall be subjected to all procedures specified by contract which are applicable to the device construction. If a device does not conform to the specific requirements herein, or contains systemic anomalies known to directly affect reliability, the disposition of the lot shall be according to contract. Random anomalies detected when devices are subjected to tests or examinations which are additional, or more rigorous than those in the detail specification, for the product assurance level being inspected, shall be noted in the report but shall not cause the lot to be considered nonconforming.

TABLE 2101-1 Mandatory procedures. 1/

Techniques	See
Electrical testing in accordance with group A, subgroup II of detail specification	4.3
Electrical testing in accordance with group A, subgroups 111 and IV and design ratings	4.4
External visual	4.5
Radiographic inspection	4.6
Hermetic seal	4.7
Hermetic seal for polymeric encapsulated devices such as bridge assemblies which contain hermetically sealed diodes shall be performed after the removal of the encapsulant	4.8 and 5.4
PIND testing	4.9
Residual gas analysis	4.10
For transparent diodes, internal visual inspection	4.11
Axial lead tensile test	4.12
Resistance to solvents	4.13
Solderability	4.14
Terminal strength	4.15
Decap analysis	5

1/ A list of techniques to be tailored for DPA performance according to the end item mission requirements and appropriate to the device construction. The tests required from this list shall be specified in the contract.

4.1 General. DPA status shall be completely documented in a report containing the following required information:

a. PIN and MIL-S-19500 reliability level.

b. Device manufacturer.

c. Lot date code.

d. When applicable and where acquired, a purchase order.

e. Sample size for each test.

f. Results of each test.

g. Stamp or signature of analyst for each test.

h. Shipment quantity represented by the DPA.

i. Radiographs, one of each required view.

j. PIND, sample size, and results.

k. Photographs including one of entire device excluding leads.

l. One copy of electrical data.

m. One copy of all mechanical dimensions data.

n. When applicable, MIL-STD-750 test method number.

o. Destruct sample evidence will remain with lot.

4.2 Tests. For MIL-S-19500 products, the test methods specified herein shall be performed by specific MIL-S-19500 qualified manufacturers, their customers, or approved sources appearing on the DESC lab suitability list.

4.3 Electrical and mechanical verification.

a. Group A, subgroup 2 inspections for room temperature dc tests shall be performed prior to DPA to verify electrical compliance of the sample. Variables data shall be taken and remain as part of the record for the lot.

b. Package dimensions as described in the outline drawing shall be measured and recorded when required. Variables data from incoming or source inspection may be used to satisfy certain requirements of this procedure if the requirements of 4.2 herein are met and the contracting parties are in agreement.

4.4 Optional electrical. Optional electrical tests such as subgroup 3 for high and low temperature and subgroup 4 for dynamic characteristics may be performed. Additional design capability tests from the detail specification; such as surge current, transient thermal resistance, and temperature coefficient may be performed. These will be specified by the contract.

4.5 External visual. External visual shall be performed according to method 2071. All text on the device body shall be recorded. If the identifier BeO is found, the manufacturer shall be contacted for information regarding alternative decap techniques.

4.6 Radiography inspection. Radiographic inspection shall be performed in accordance with method 2076.

4.7 Hermetic seal. Hermetic shall be performed. Devices shall be subject to gross and fine leak in accordance with method 1071. Omit the fine leak requirement for double plug construct-ion type diodes. Substitute gross leak, condition E, as applicable, for double plug types and method 2068 for double plug opaque glass body types. Paint shall be removed prior to subjecting glass devices to hermetic seal evaluations.

4.8 Hermetic seal for polymeric encapsulated devides. Hermetic seal for polymeric encapsulated devices such as bridge assemblies which contain hermetically sealed diodes shall have the diodes evaluated after removal of the encapsulant (see 5.4 herein).

4.9 PIND testing. PIND testing shall be performed on devices with internal die cavities to method 2052, condition A.

4.10 Water vapor testing. Water vapor testing to method 1018 shall be performed on additional unopened devices to one of the three allowed procedures if it has been determined after delidding (see 5.3.4 herein) that corrosion or potentially corrosive elements such as chlorine or potassium salts are present in the cavity.

4.11 Internal visual. Internal visual shall be performed prior to any destructive procedures for diodes of clear glass construction. Criteria shall be in accordance with method 2074. Opaque or metal can construction shall be evaluated for internal features after the decap procedure (see 5. herein).

4.12 Axial lead tensile test. Axial lead tensile strength shall be tested in accordance with method 2005.

4.13 Resistance to solvents. Resistance to solvents shall be performed in accordance with method 1022.

4.14 Solderability. Solderability shall be performed on “as received” devices within 30 days of receipt according to method 2026. Care in handling shall be exercised to prevent lead surface contamination prior to and during this test.

4.15 Terminal strength. Terminal strength shall be performed in accordance with method 2036.

5. Decap analysis. Decapping techniques for die inspection and die bond analysis shall be performed. (All inspections requiring an intact diode shall be conpleted at this point.)

5.1 Axial lead or surface mount construction.

a. The diode shall be encapsulated longitudinally in a mounting compound suitable for use as a carrier for further sample processing. The mounting conpound will be selected to have expansion and contraction properties as close as possible to the device body encapsulant to prevent the generation of stress cracks in sample preparation.

b. For clear glass construction the sample shall be positioned in such a way that one side of the die is parallel to the sectioning apparatus (see figure 2101-1). This will assure that polishing of the cross section will reveal areas from which approximate dimensions may be determined.

c. The sample shall be sectioned using a laboratory grade grinding and lapping table. Precautions shall be taken to prevent damage to the sample by overly aggressive grit paper selection. In the case of cavity type constructions, the process of grinding shall stop immediately upon opening the cavity, to allow for the insertion and curing of clear backfilling compound material. This is done to assure that the internal constituents of the assembly are encased and protected from damage to the die as the grinding process continues.

d. The DPA sample may be polished and stained to enhance construction details at one or several planes. The specimen will be recorded by photomicroscopy when it is determined that the center of the die has been reached (see figure 2101-1). Two photographs will be taken; one containing means for dimensioning the image, or the optical magnification shall be indicated.

e. Due to the brittle characteristics of the various materials in the construction method, damage may be induced by the sectioning technique. For glass diodes with metallurgical bond, die, or glass cracks damage may be induced as the compression built into the seal is relaxed as the structure is weakened in the cross sectioning process. This method may not be used for disposition of metallurgical bond voids.

5.2 Scribe and break method for glass axial lead and surface mount types.

a. In this method the device is deliberately destroyed to allow visibility to the die attachment area.

b. The diode body is scored circumferentially at the location of the die plane (see figure 2101-2). This is usually accomplished with a diamond scribe. The device is then snapped into two pieces. (Observe eye protection against glass particles). Alternatively the glass body may be chemically dissolved and the die snapped. At this time the two plug surfaces may be inspected for both silicon and die metallization residue.

c. The silicon remaining on each plug may be chemically removed to provide visibility to the attachment interface materials, however this step is not mandatory. Photographs will be taken of both separated attachment surfaces. A means may be provided in the photo to dimension the image.

5.2.4 Die bond evaluation. Metallurgically bonded construction types shall be evaluated to the requirements of 30.14 of MIL-S-19500. Both separated contact interfaces shall be optically evaluated for the bond area in accordance with TABLE II (Die attach criteria). If a device does not satisfy the die attach criteria, as specified, a thermal transient response test (MIL-STD-750 method 3101) shall be performed, on a sample basis to establish acceptability for use.

TABLE 2101-II. Die attach criteria.

Construction		Percent design contact area to be bonded (typical)
Category I:	Eutectic, thermally matched	80
Category II:	Solder	50
	Silver button with braze 1/	25
Category III:	Silver button side	Unspecified
	Back side 2/	10
	Zeners ≤ 6.8 V and schottky devices 3/	0

1/ The silver button design contact area is the entire button top view area in intimate contact with the plug or braze preform interface. When both sides of the die are adequately bonded, the button to silicon interface (the area from which silver has grown, but not including any area which may be expanded over protective oxides) may become the area where separation occurs using the scribe and break technique to open the glass. The button to silicon interface will then become the measured design contact area. The percent bond area will be determined by the silicon pulled and remaining on the backside of the button.

2/ Silver button construction: The percent area requirement applies only to the back contact or silicon side. The button to plug interface shall be bonded at point of contact or the tangent formed at their interface.

3/ The requirements of 5.2.4 do not apply for schottky or low voltage thermally matched noncavity zener construction.

5.3 Stud mount or axial lead metal can.

a. Determine internal construction techniques from construction documentation or radiographic inspection.

b. For crimp construction, encapsulate one devide in a specimen mounting compound suitable for grinding, lapping, and polishing procedures. Section the crimp perpendicular to the longitudinal axis to the point where the crimp is made (as determined from the construction details in the drawings or radiographic image) and determine the quality of the mechanical attachment process (see figure 2101-3).

c. This same sample may be used to observe the construction and dimensions of the internal elements. This will be acccmplished by cross section of the device along the longitudinal axis and backfilling the internal cavity with epoxy as soon as the case is penetrated to prevent damage in the grinding operations to follow. Section the device to the approximate center of the die by carefully examining the device at various planes and reducing the grit abrasiveness to limit sectioning damage. Polish and stain the sample to enhance die construction. Then photograph the internal elements.

d. To view all internal surfaces, unmounted samples shall be delidded by cutting the crimp terminal just below the mechanical attachment then removing the lid by cutting circumferentially with a delidding device above the seating flange (see figure 2101-3). Care must be taken to prevent damage to the post connection at the top of the die when delidding.

e. The device shall be evaluated for die attachment position, die to preform and header interface, die topography, and post or "C" bend attachment. Photographs of internal construction will be made.

f. Bond strength testing using method 2037 is optional for construction with metal clips or wires.

g. When practical, die shear or punch testing for metal cans shall be in accordance with method 2017.

5.4 Plastic encapsulated assemblies.

a. Complex devices such as bridges containing several discrete devices shall be evaluated externally for all major features as applicable and described above for individual devices.

b. Internal construction shall be evaluated by removing the device encapsulating material with appropriate reagents using standard laboratory practice. Where uncertainty about the destructiveness of chemicals exists on internal construction elements, experiments on electrical rejects should occur or the manufacturer should be contacted for guidance.

c. Individual diode placement and method of attachment to assembly terminals shall be evaluated. Attention shall be focused on internal conductor diameters and minimum bridging distance of electrically isolated points.

d. Individual discree diodes shall be removed from the assembly in a manner which does not impart mechanical shock or overtemperature conditions. They shall be evaluated according to the method appropriate to their construction as specified in the appropriate method herein.

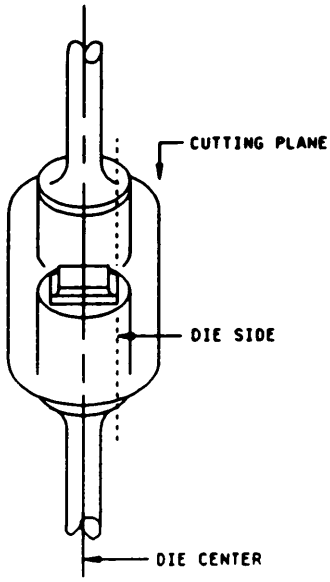

FIGURE 2101-1. Axial lead or surface mount construction.

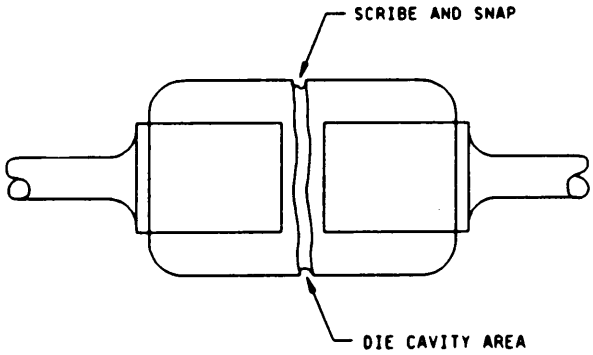

FIGURE 2101-2. Axial lead or surface mount construction.

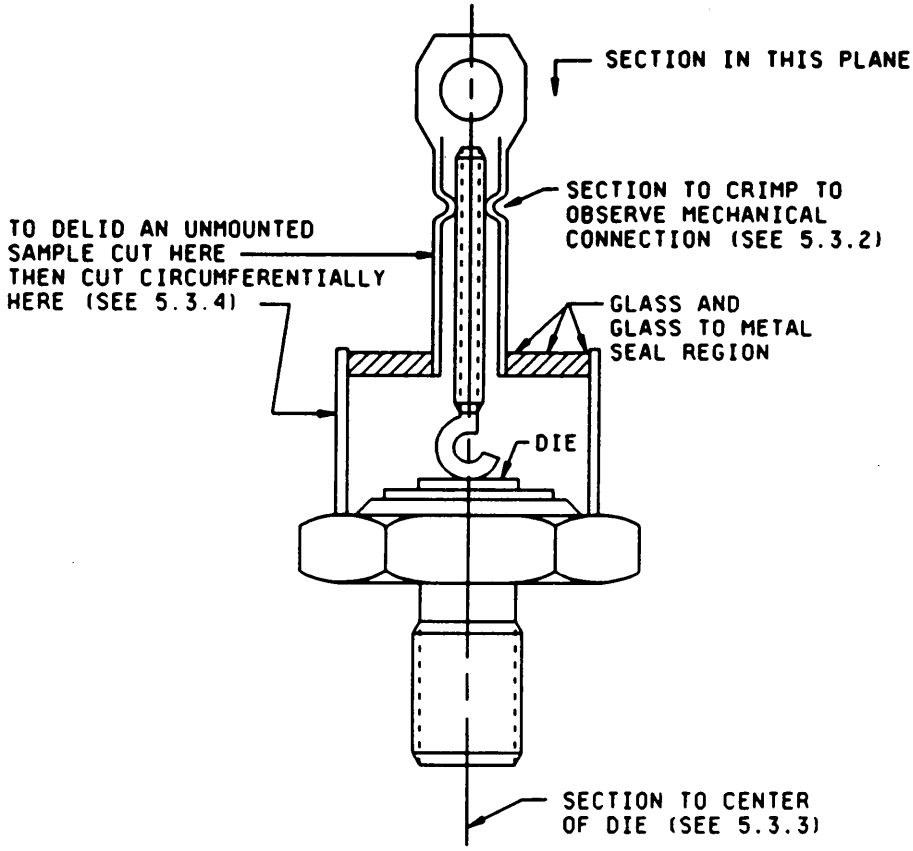

FIGURE 2101-3. Stud package.

3000 Series

Electrical characteristics tests for bipolar transistors

METHOD 3001.1

BREAKDOWN VOLTAGE, COLLECTOR TO BASE

1. Purpose. The purpose of this test is to determine if the breakdown voltage of the device under the specified conditions is greater than the specified minimum limit.

2. Test circuit. See figure 3001-1.

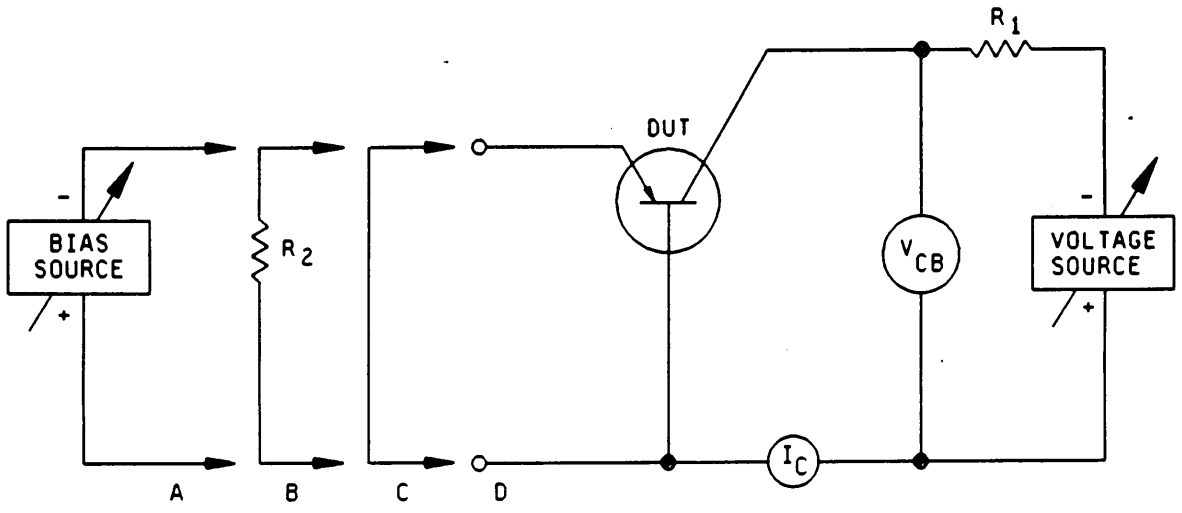

NOTE: The ammeter shall present essentially a short circuit to the terminals between which the current is being measured or the voltmeter readings shall be corrected for the ammeter drop.

FIGURE 3001-1. Test circuit for breakdown voltage, collector to base.

3. Procedure. The resistor R_1 is a current-Limiting resistor and should be of sufficiently high resistance to avoid excessive current flowing through the device and current meter. The voltage shall be gradually increased, with the specified bias conditions (condition A, B, C, or D) applied, from zero until either the minimum limit for $V_{(BR)CBX}$ or the specified test current is reached. The device is acceptable if the minimum limit for $V_{(BR)CBX}$ is reached before the test current reaches the specified value. If the specified test current is reached first, the device is rejected.

4. Summary. The following conditions shall be specified in the detail specification:

a. Test current (see 3.).

b. Bias condition:

A: Emitter to base: Reverse bias (specify bias voltage).

B: Emitter to base: Reverse return (specify resistance of R_2).

C: Emitter to base: Short circuit.

D: Emitter to base: Open circuit.

METHOD 3005.1

BURNOUT BY PULSING

1. Purpose. The purpose of this test is to determine the capabilities of the device to withstand pulses.

2. Procedure. The device shall be subjected to a pulse or pulses of the length, voltages, currents, and repetition rate specified with the specified prepulse conditions.

3. Summary. The following conditions shall be specified in the detail specification:

   a. Prepulse conditions (see 2.).

   b. Pulse width (see 2.).

   c. Pulse voltages and currents (see 2.).

   d. Repetition rate (see 2.).

   e. Measurements after test.

   f. Length of test or number of cycles.

METHOD 3011.2

BREAKDOWN VOLTAGE,
COLLECTOR TO EMITTER

1. Purpose. The purpose of this test is to determine if the breakdown voltage of the device under the specified conditions is greater than the specified minimum limit.

2. Test circuit. See figure 3011-1.

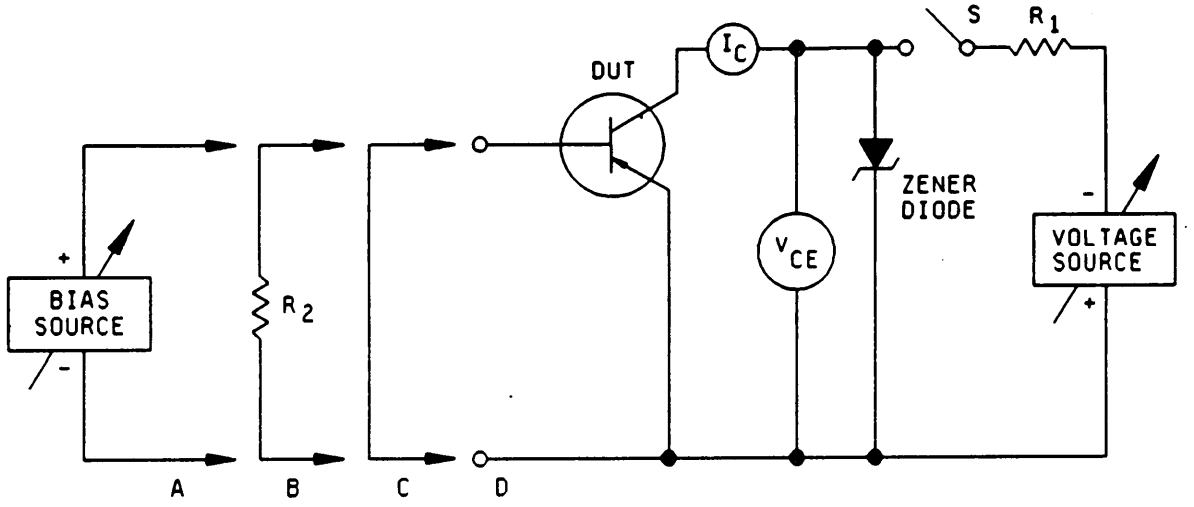

NOTES:
1. A PNP device is shown. For NPN types, reverse the polarities of the voltage and bias sources and zener diode.
2. An electronic switch, "S" may be necessary to provide pulses of short duty cycle to minimize the rise of junction temperature.
3. The current sensor, or ammeter, shall present essentially a short circuit to the terminals between which the current is being measured, or the voltage readings shall be corrected accordingly.
4. It is important to prevent, or dampen, potentially damaging oscillations in devices exhibiting negative resistance breakdown characteristics. Protection can be in the form of a circuit which circumvents the negative resistance region, such as one which provides suitable has curient as the collector voltage is increased; however, the specified bias condition and test current must be applied when the voltage is measured. Additional protection can be provided with a zener diode, or transient voltage protection circuit to limit to collector voltage at, or slightly above, the specified minimum limit.
5. Regardless of the protection used, extreme care must be exercised to ensure the collector current and junction temperature remain at a safe value, as given in the applicable device specification.

FIGURE 3011-1. Test circuit for breakdown voltage, collector to emitter.

3. Procedure. The resistor R_1 is a current-limiting resistor and should be of sufficiently high resistance to avoid excessive current flowing through the device and current sensor. The voltage shall be increased, with the specified bias conditions (condition A, B, C, or D) applied, until the specified test current is reached. The device is acceptable if the voltage applied at the specified test current is greater than the minimum limit for $V_{(BR)CEX}$.

4. Summary. The following conditions shall be specified in the detail specification:

a. Test current (see 3.).

b. Duty cycle and pulse width, when required (see note 1 above).

c. Bias condition as follows:

A: Emitter to base: Reverse bias (specify bias voltage).

B: Emitter to base: Resistance return (specify resistance value of R_2).

C: Emitter to base: Short circuit.

D: Emitter to base: Open circuit.

METHOD 3015

DRIFT

1. Purpose. The purpose of this test is to determine the drift of a parameter specified in the detail specification of the device.

2. Apparatus. The apparatus used for the performance of the drift test shall be the same as that utilized for testing the associated parameter.

3. Procedure. The voltages and currents specified in the detail specification shall be applied. In the period from 10 seconds to 1 minute, the measurement specified in the detail specification shall drift no more than the amount specified in the detail specification.

4. Summary. The following conditions shall be spedified in the detail spedification:

a. Test currents and voltages (see 3.).

b. Test parameter (see 3.).

c. Test apparatus or test circuit (see 2.).

METHOD 3020

FLOATING POTENTIAL

1. Purpose. The purpose of this test is to measure the dc potential between the specified, open-circuited terminal and reference terminal when a dc potential is applied to the other specified terminals.

2. Test circuit. See figure 3020-1.

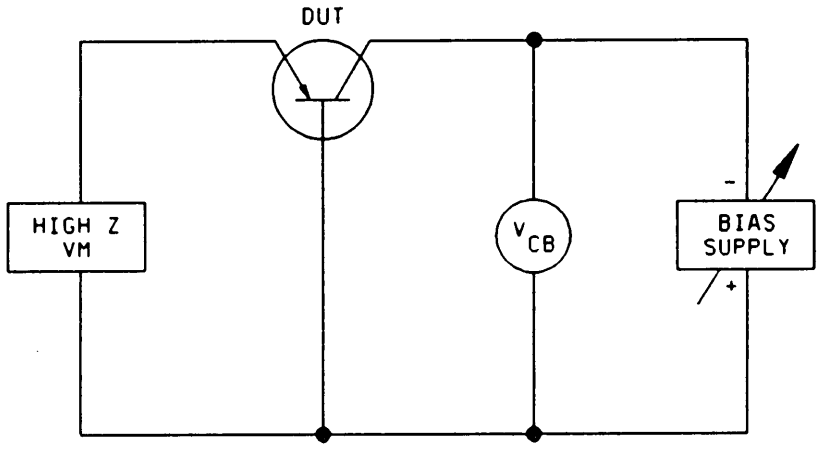

NOTE: The circuit shown is for measuring the emitter floating potential. For other device configurations the above circuitry should be modified in such a manner that is capable of demonstrating device conformance to the minimum requirements of the individual specification.

FIGURE 3020-1. Test circuit for floating potential.

3. Procedure. The specified dc voltage shall be applied to the specified terminals and the dc voltage of the open-circuited terminal and reference terminal shall be monitored.

4. Summary. The following conditions shall be specified in the detail specification:

a. Test voltage (see 3.).

b. Input resistance of high impedance voltmeter (see figure 3020-1).

c. Test voltage application and reference terminals (see 3.).

METHOD 3026.1

BREAKDOWN VOLTAGE, EMITTER TO BASE

1. Purpose. The purpose of this test is to determine if the breakdown voltage of the device under the specified conditions is greater than the specified minimum limit.

2. Test circuit. See figure 3026-1.

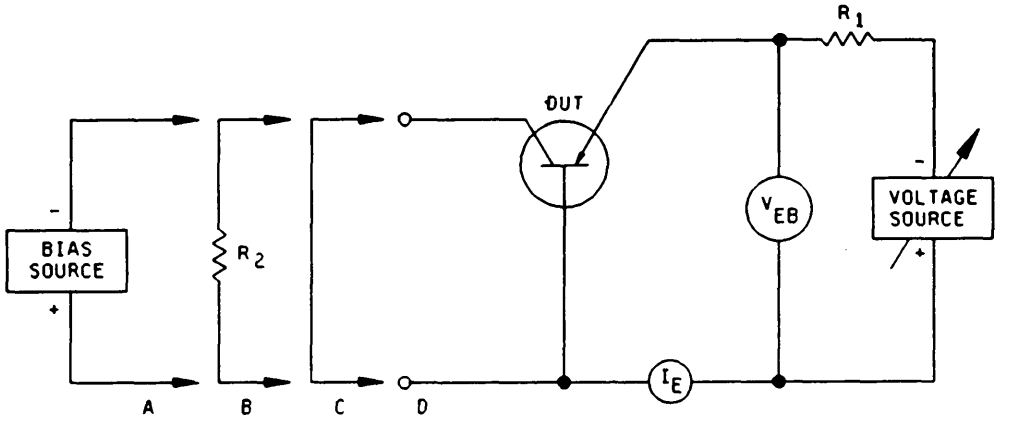

NOTE: The ammeter shall present essentially a short circuit to the terminals between which the current is being measured or the voltmeter readings shall be corrected for the ammeter drop.

FIGURE 3026-1. Test circuit for breakdown voltage, emitter to base.

3. Procedure. The resistor R_1 is a current-limiting resistor and should be of sufficiently high resistance to avoid excessive current flowing through the device and current meter. The voltage shall be gradually increased, with the specified condition (A, B, C, or D) applied, from zero until either the minimum limit for $V_{(BR)EBX}$ or the specified test current is reached. The device is acceptable if the minimum limit for $V_{(BR)EBX}$ is reached before the test current reaches the specified value. If the specified test current is reached first, the device is rejected.

4. Summary. The following conditions shall be specified in the detail specification:

a. Test current (see 3.).

b. Bias condition:

A: Collector to base: Reverse bias (specify bias voltage).

B: Collector to base: Resistance return (specify resistance of R_2).

C: Collector to base: Short circuit.

D: Collector to base: Open circuit.

METHOD 3030

COLLECTOR TO EMITTER VOLTAGE

1. Purpose. The purpose of this test is to measure the voltage between the collector and emitter of the device under specified conditions.

2. Test circuit. See figure 3030-1.

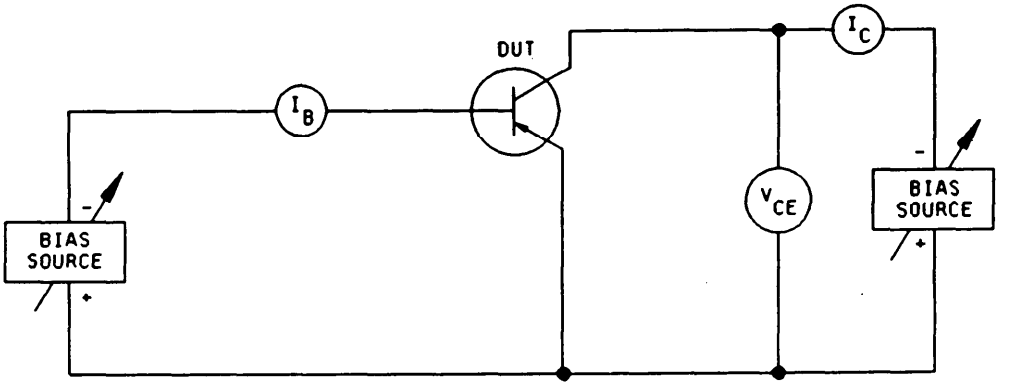

FIGURE 3030-1. Test circuit for collector to emitter voltage.

3. Procedure. The bias supplies shall be adjusted until the specified voltages and currents are achieved. The voltage between the collector and emitter shall then be measured. If high current values are to be used in this measurement, suitable pulse techniques may be used to provide pulses of short duty cycle to minimize the rise in junction temperature.

4. Summary. The following conditions shall be specified in the detail spedification:

a. Test voltages and currents (see 3.).

b. Duty cycle and pulse width if applicable (see 3.).

METHOD 3036.1

COLLECTOR TO BASE CUTOFF CURRENT

1. Purpose. The purpose of this test is to measure the cutoff current of the device under the specified conditions.

2. Test circuit. See figure 3036-1.

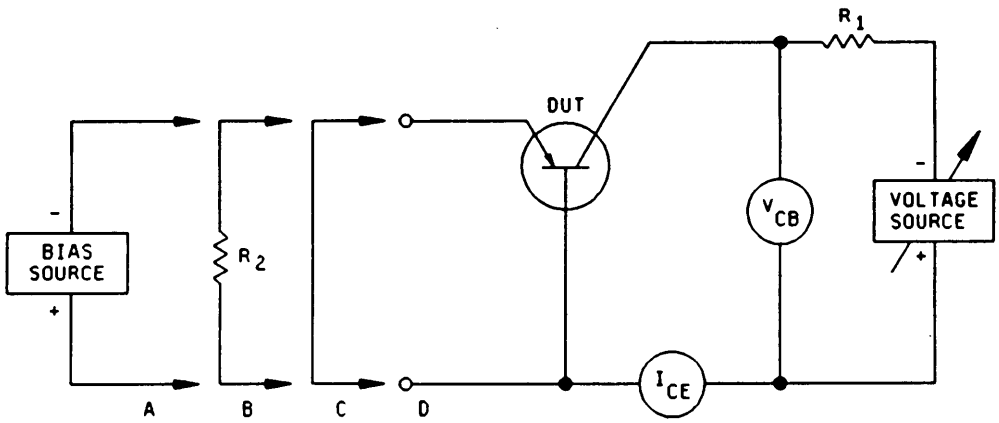

NOTE: The ammeter shall present essentially a short circuit to the terminals between which the current is being measured or the voltmeter shall be corrected for the drop across the ammeter.

FIGURE 3036-1. Test circuit for collector to base cutoff current.

3. Procedure. The specified dc voltage shall be applied between the collector and the base with the specified bias condition (A, B, C, or D) applied to the emitter. The measurement of current shall be made at the specified ambient or case temperature.

4. Summary. The following conditions shall be specified in the detail specification:

a. Test voltage (see 3.).

b. Test temperature if other than +25°C ±3°C and whether case or ambient (see 3.).

c. Bias condition:

A: Emitter to base: Reverse bias (specify bias voltage).

B: Emitter to base: Resistance return (specify resistance of R_2).

C: Emitter to base: Short circuit.

D: Emitter to base: Open circuit.

METHOD 3041.1

COLLECTOR TO EMITTER CUTOFF CURRENT

1. Purpose. The purpose of this test is to measure the cutoff current of the device under the specified conditions.

2. Test circuit. See figure 3041-1.

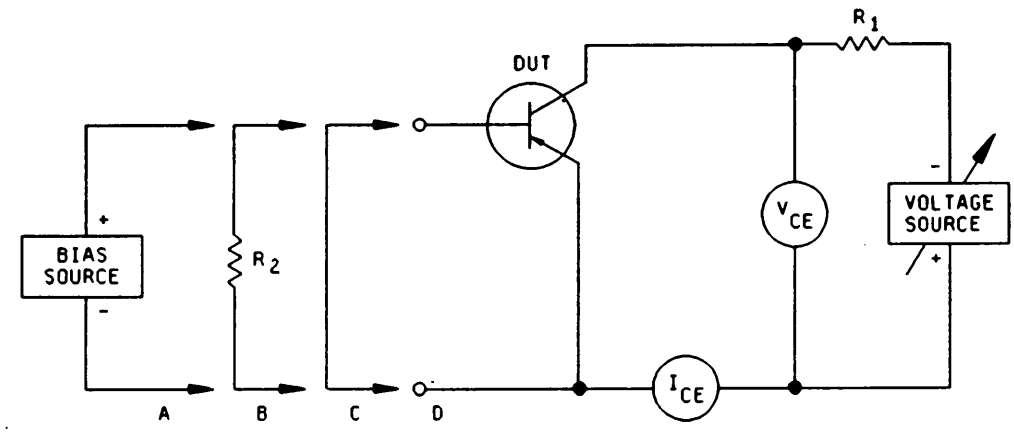

NOTE: The ammeter shall present essentially a short circuit to the terminals between which the current is being measured or the voltmeter shall be corrected for the drop across the ammeter.

FIGURE 3041-1. Test circuit for collector to emitter cutoff current.

3. Procedure. The specified voltage shall be applied between the collector and emitter with the specified bias condition (A, B, C, or D) applied to the base. The measurement of current shall be made at the specified ambient or case temperature.

4. Summary. The following conditions shall be specified in the detail specification:

a. Test voltage (see 3.).

b. Test temperature if other than +25°C ±3°C and whether case or ambient (see 3.).

c. Bias condition:

A: Emitter to base: Reverse bias (specify bias voltage).

B: Emitter to base: Resistance return (specify resistance value of R_2).

C: Emitter to base: Short circuit.

D: Emitter to base: Open circuit.

METHOD 3051

SAFE OPERATING AREA (CONTINUOUS DC)

1. Purpose. The purpose of this test is to verify the boundary of the SOA of a transistor as constituted by the interdependency of the specified voltage, current, power, and temperature in a temperature stable circuit.

2. Test circuit. See figure 3051-1.

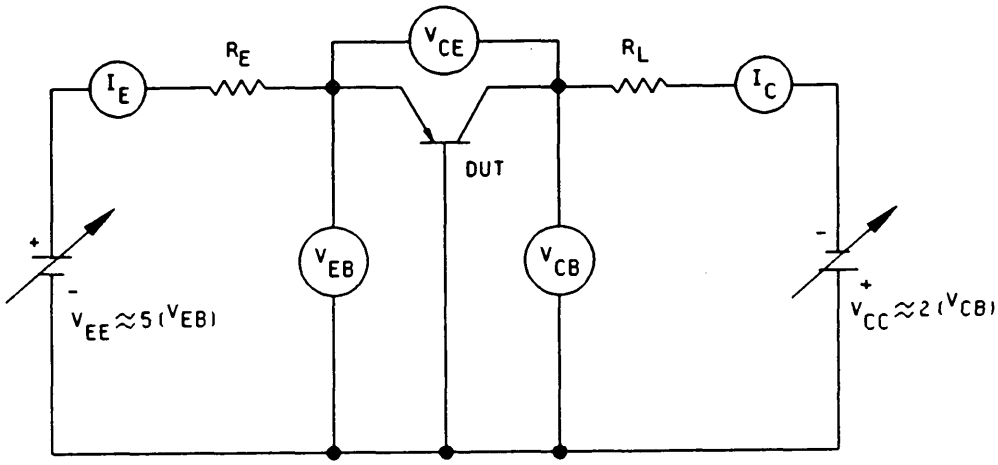

FIBURE 3051-1. Test circuit for SOA (continues dc).

3. Procedure,

a. Starting with V_{cc} and V_{EE} at a low value, increase V_{cc} to approximately obtain spedified V_{CE} Increase V_{EE} to approximately obtain specified Ic. Increase V_{cc} and subsequently adjust V_{EE} to obtain specified V_{CE} and I_c. Operate the transistor at the spedified temperature and for the specified time duration.

b. Decrease V_{cc} to obtain V_{CE} near zero. Turn off V_{EE}. Turn off V_{cc}.

c. The transistor shall be considered a failure if Xc varies ±10 percent during operation, or exceeds the end points.

4. Summary. The following conditions shall be specified in the detail specification:

a. Maximum SOA graph: I_c versus V_{CE} (see 3.).

b. Temperature, case or ambient (see 3.).

c. Values of V_{CE} and I_c.

d. Operating time (see 3.).

e. Measurements after test.

METHOD 3052

SAFE OPERATING AREA (PULSED)

1. Purpose. The purpose of this test is to verify the capability of a transistor to withstand pulses of specific voltage, current and time, establishing a SOA.

2. Test circuit. See figure 3052-1.

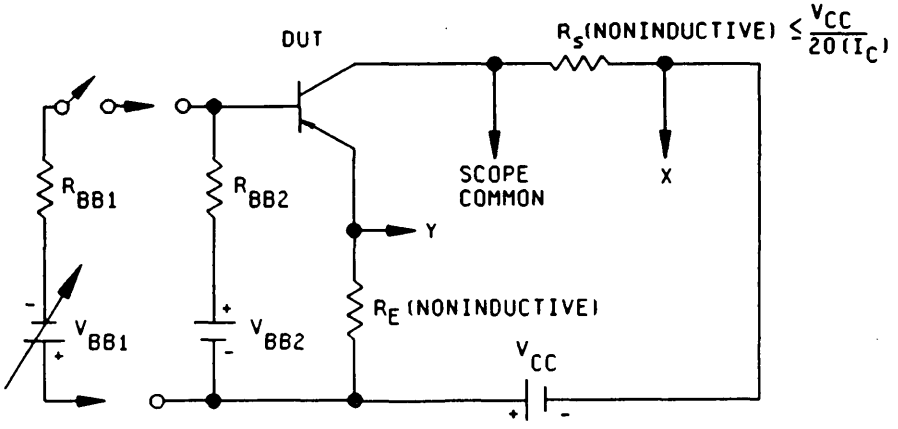

FIGURE 3052-1. Test circuit for SOA (pulsed).

3. Procedure. Starting at a low value, adjust V_{BB2} and V_{cc} to the specified levels. With the duty cycle and pulse width preset to specified conditions, increase V_{BB1} voltage to achieve the specified I_c.

4. Summary. The following conditions shall be specified in the detail specification:

a. Maximum SOA graph: I_c versus V_{CE}.

b. Temperature, case or ambient.

c. Input pulse and bias conditions:

(1) Pulse duty cycle.

(2) Pulse width.

(3) t_r and t_f.

(4) Values for R_{BB2}, R_{BB1}, and V_{BB2} (see figure 3052-1).

(5) Number of pulses or test duration.

d. Values of R_E, V_{cc}, and I_c (see 3.).

e. Measurements after test.

METHOD 3053

SAFE OPERATING AREA (SWITCHING)

1. Purpose. The purpose of this test is to verify the capability of a transistor to withstand switching between saturation and cut-off for various specified loads, establishing a SOA.

2. Test circuit. See figure 3053-1.

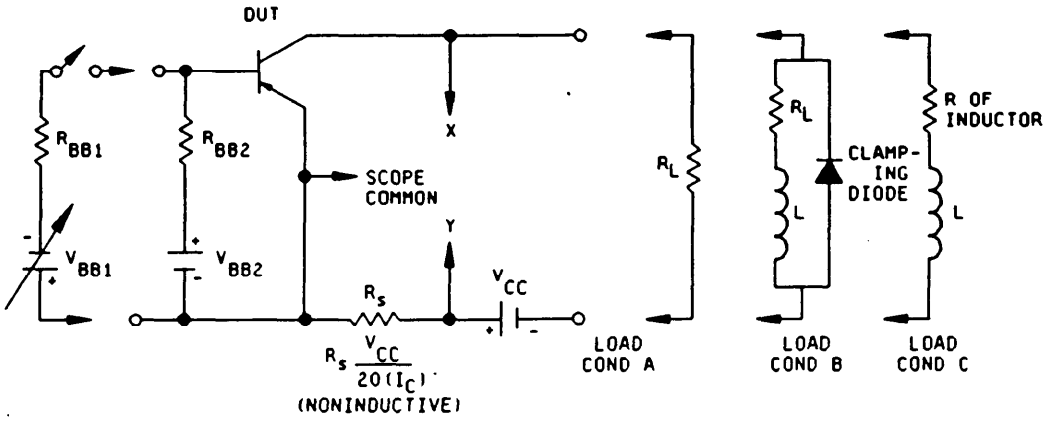

FIGURE 3053-1. Test circuit for SOA (switching).

3. Procedure. The output load circuit configuration shall be as specified (condition A, B, or C). Starting at a low value, adjust V_{BB2} and V_{cc} to the specified levels. With the duty cycle and repetition rate preset to specified conditions, increase V_{BB1} voltage to achieve the specified I_c; and the output waveform (I_c versus V_{CE}) shall be observed on the scope. When the transistor is turned off (switched), the observed trace shall be a smooth curve between saturation and cut-off. Any oscillations or inconsistencies on the trace shall be cause for rejection.

4. Summary. The following conditions shall be specified in the detail specification:

a. Maximum SOA graph, with parameter coordinates as follows:

(1) I_c versus V_{CE} for load condition A.

(2) I_c versus V_{CE} for load condition B.

(3) I_c versus L as functions of R_{BB2} and V_{BB2}, for load condition C.

b. Load condition as follows:

A: Resistive load.

B: Clamped inductive load.

C: Unclamped inductive load.

c. Temperature, case or ambient.

d. Input pulse and bias conditions:

(1) Number of pulses or test duration.

(2) Pulse width.

(3) Pulse duty cycle.

(4) t_r and t_f.

(5) R_{BB1} and V_{BB1}.

(6) R_{BB2} and V_{BB2}.

e. Specific conditions for load and output bias:

Condition A: Values of R_L, Xc, and V_{cc}.

Condition B: Values of R_L, XC, V_{cc}, diode type or characteristics, inductance and dc resistance of L.

Condition C: Values of I_c, V_{cc}, and characteristics of inductor L including its inductance, "Q", dc resistance, and resonant frequency.

f. Measurements after test.

METHOD 3061.1

EMITTER TO BASE CUTOFF CURRENT

1. Purpose. The purpose of this test is to measure the cutoff current of the device under the specified conditions.

2. Test circuit. See figure 3061-1.

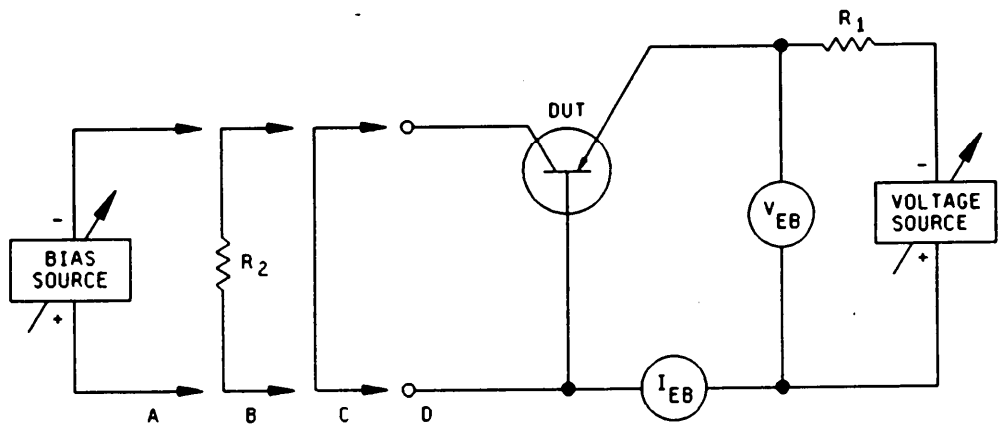

NOTE: The ammeter shall present essentially a short circuit to the terminals between which the current is being measured or the voltmeter shall be corrected for the drop across the ammeter.

FIGURE 3061-1. Test circuit for emitter to base cutoff current.

3. Procedure. The specified direct current voltages shall be applied between the emitter and the base with the specified bias condition (condition A, B, C, or D) applied to the collector. The measurement of current shall be made at the specified ambient or case temperature.

4. Summary. The following conditions shall be specified in the detail specification:

a. Test voltage (see 3.).

b. Test temperature if other than +25°C ±3°C and whether case or ambient (see 3.).

c. Bias condition (A, B, C, or D):

A: Collector to base: Reverse bias (specify bias voltage)..

B: Collector to base: Resistance return (specify resistance of R_2).

C: Collector to base: Short circuit.

D: Collector to base: Open circuit.

METHOD 3066.1

BASE EMITTER VOLTAGE (SATURATED OR NONSATURATED)

1. Purpose. The purpose of this test is to measure the base to emitter voltage of the device in either a saturated or nonsaturated condition.

2. Test circuit. Circuit and procedure shown are for base to emitter. For other parameters the circuit and procedure should be changed accordingly.

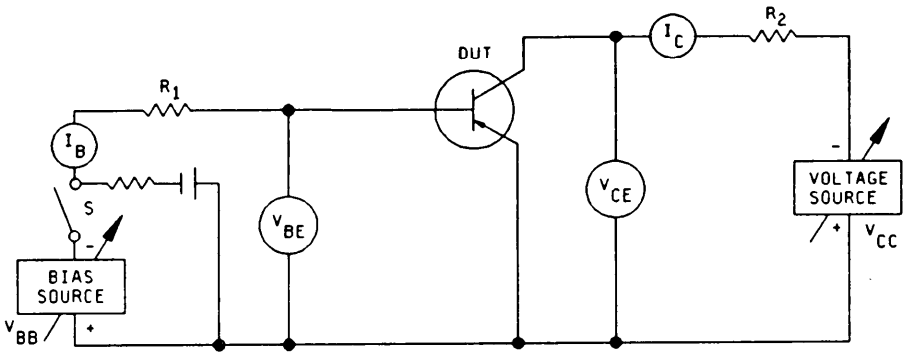

NOTE: If necessary, switch S shall be used to provide pulses of short-duty cycle to minimize the rise in junction temperature. When pulsing techniques are used, oscillograph methods shall be used to measure V_{BE} and the other necessary parameters, and the duty cycle and pulse width shall be specified.

FIGURE 3066-1. Test circuit for base emitter voltage (saturated or nonsaturated).

3. Procedure.

3.1 Test condition A (saturated). The resistor R_1 shall be made large. If the pulse method is used, the resistor R_2 shall be chosen in combination with V_{cc} so that the specified collector current is achieved at a value of V_{cc} low enough to ensure that the device will not be operated in breakdown between pulses. If the pulse method is not used, resistor R_2 can be any convenient value. The current I_B and voltage V_{cc} shall be adjusted until I_B and Xc achieve their specified values. Then, $V_{BE} = V_{BE(sat)}$.

3.2 Test condition B (nonsaturated). For this test resistor R_2 shall be zero. The specified values of I_B and V_{CE} shall be applied. V_{BE} is then measured. Alternately, the specified V_{CE} shall be applied and I_B adjusted to obtain the specified I_c.

4. Summary. The following conditions shall be specified in the detail specification:

a. Duty cycle and pulse width, when required.

b. Test condition letter (see 3.).

c. Test voltages or currents (see 3.).

d. Parameter to be measured.

METHOD 3071

SATURATION VOLTAGE AND RESISTANCE

1. Purpose. The purpose of this test is to measure the saturation voltage and resistance of the device under the specified conditions.

2. Test circuit. Circuit and procedure shown are for collector to emitter. For other parameters the circuit and procedure should be changed accordingly.

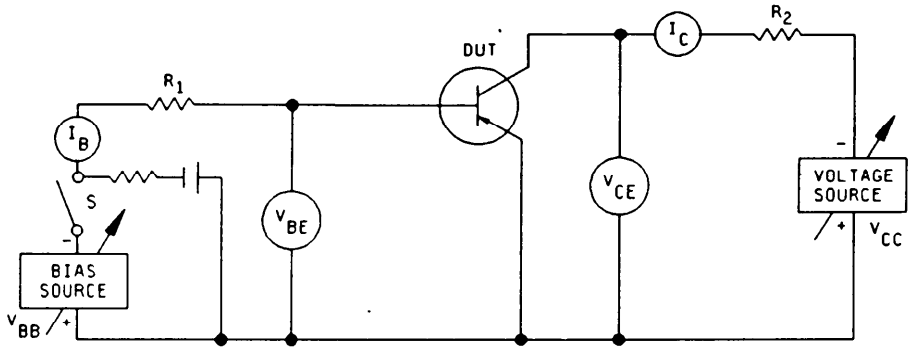

NOTE: If necessary, switch S shall be used to provide pulses of short-duty cycle to minimize the rise in junction temperature. When pulsing techniques are used, oscillograph methods shall be used to measure V_{BE} and the other necessary parameters, and the duty cycle and pulse width shall be specified.

FIGURE 3071-1. Test circuit for saturation voltage and resistance.

3. Procedure. The resistor R_1 shall be made large. If the pulse method is used, resistor R_2 shall be chosen in combination with V_{cc} so that the specified collector current may be achieved at a value of V_{cc} which is low enough to ensure that the device is not operated in breakdown between pulses. If pulse methods are not used R_2 may be any convenient value. The current I_B and V_{cc} shall be adjusted Until I_B and I_c achieve their specified values. $V_{CE(sat)}$ is then equal to the voltage measured by voltmeter V_{CE} under the specified conditions. Saturation, resistance may be determined from the same circuit conditions, as follows:

$$V_{CE(sat)} = \frac{V_{CE}(sat)}{I_C}$$

4. Summary. The following conditions shall be spedified in the detail specifications.

a. Duty cycle and pulse width, when required (see 3.).

b. Test voltages or currents (see 3.).

c. Parameter to be measured.

METHOD 3076.1

FORWARD-CURRENT TRANSFER RATIO

1. Purpose. The purpose of this test is to measure the forward-current transfer ratio of the device under the specified conditions.

2. Test circuit. Circuit and procedure shown are for common emitter. For other parameters the circuit and procedure should be changed accordingly.

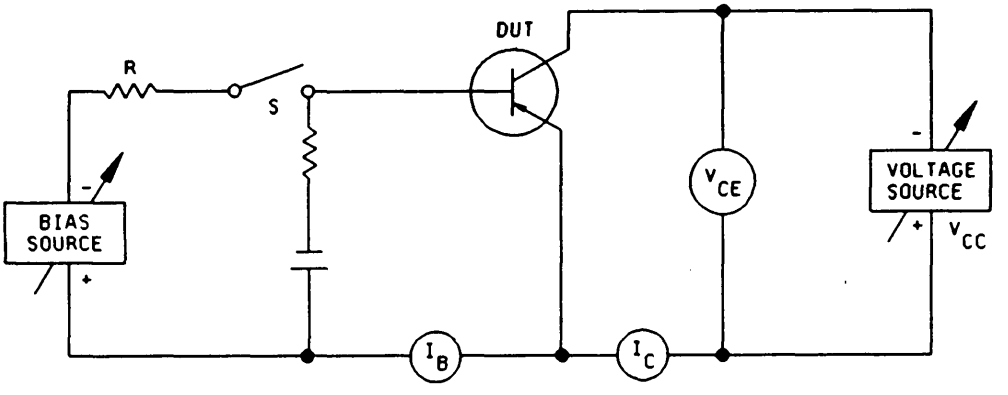

NOTE: The ammeter shall present essentially a short circuit to the terminals between which the current is being measured or the voltmeter shall be corrected for the drop across the ammeter.

FIGURE 3076-1. Test circuit for forward-current transfer ratio.

3. Procedure. The voltage V_{CE} shall be set to the specified value and the current I_B shall be adjusted until the specified current I_C is achieved.

Then, $h_{FE} = \frac{I_C}{I_B}$.

If high-current values are to be used in this measurement, switch S shall be used to provide pulses of short-duty cycle to minimize the rise in junction temperature. When pulsing techniques are used, oscillograph methods may be used to measure I_C and I_B.

4. Summary. The following conditions shall be specified in the detail specification:

a. Test voltage or current (see 3.).

b. Duty cycle and pulse width, when required (see 3.).

c. Parameter to be measured.

METHOD 3086.1

STATIC INPUT RESISTANCE

1. Purpose. The purpose of this test is to measure the input resistance of the device under the specified conditions.

2. Test circuit. Circuit and procedure shown are for common emitter. For other parameters the circuit and procedure should be changed accordingly.

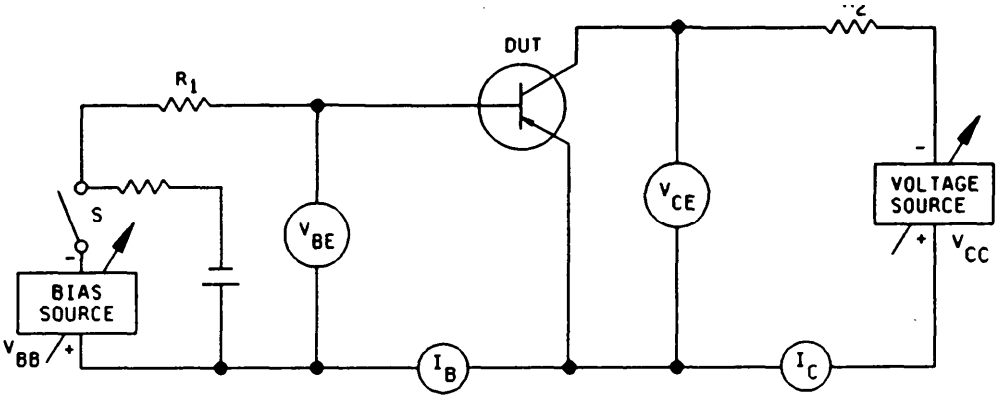

NOTE: If necessary, switch S shall be used to provide pulses of short-duty cycle to minimize the rise in junction temperature. When pulsing techniques are used, oscillograph methods shall be used to measure V_{BE} and other necessary parameters, and the duty cycle and pulse width shall be specified.

FIGURE 3086-1. Test circuit for static input resistance.

3. Procedure. The resistor R_1 shall be made large. If the pulse method is used, resistor R_2 shall be chosen in combination with V_{cc} so that the specified collector current is achieved at a value of V_{cc} low enough to ensure that the device will not be operated in breakdown between pulses. If the pulse method is not used, resistor R_2 can be any convenient value. The current I_B and V_{cc} shall be adjusted until I_B and I_c achieve their specified values.

$$\text{Then: } h_{IE} = \frac{V_{BE}}{I_B}$$

4. Summary. The following conditions shall be specified in the detail specification

a. Pulse duty cycle and width, when required (see 3.).

b. Test voltages or currents (see 3.).

c. Parameter to be measured.

METHOD 3092.1

STATIC TRANSCONDUCTANCE

1. Purpose. The purpose of this test is to measure the static transconductance of the device under the specified conditions.

2. Test circuit. See figure 3092-1.

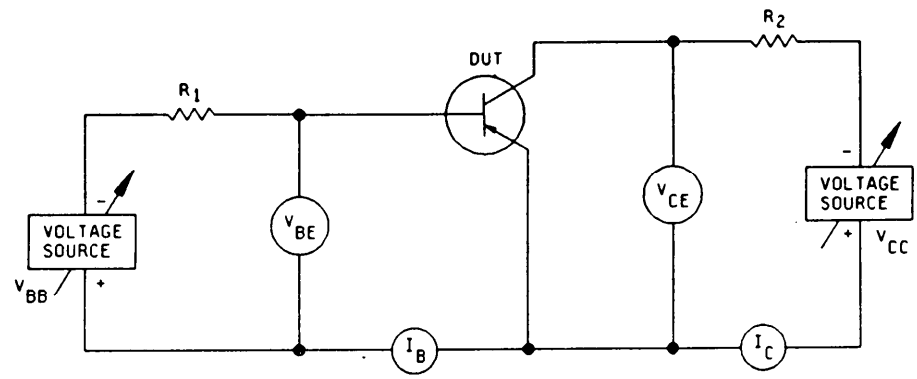

NOTE: For other configurations, the circuit may be modified in such a manner that it is capable of demonstrating device conformance to the minimum requirements of the individual specification.

FIGURE 3092-1. Test circuit for static transconductance.

3. Procedure. The resistor R_1 shall be made large or the voltage source V_{BB} shall be replaced by a constant current source. The resistor R_2 shall be chosen in combination with V_{CC} so that the specified collector current is achieved at a value of V_{CC} which is lower than $V_{(BR)CEO}$ - The current I_B shall be adjusted until V_{CE} and Xc achieve their specified values. The current I_C or I_E and the voltages V_{BE}, V_{BC}, or V_{EB} shall then be measured. Using the values obtained through these measurements, the static transconductance shall be calculated as follows:

For common emitter

$$g_{ME} = \frac{I_C}{V_{BE}}$$

For common collector

$$g_{MC} = \frac{I_E}{V_{BC}}$$

For common base

$$g_{MB} = \frac{I_C}{V_{EB}}$$

If high current values are to be used in the measurement, suitable pulse techniques may be used to provide pulses of short-duty cycle to minimize the rise in junction temperature.

4. Summary. The following conditions shall be specified in the detail specification:

a. Test voltage or current.

b. Duty cycle and pulse width, if applicable.

3100 Series

Circuit-performance and thermal-resistance measurements

For thermal-resistance measurements, at least three temperature sensitive parameters (TSP) of the transistor can be used; the collector to base cutoff current, I_{CBO}; the forward voltage drop of the emitter to base diode, V_{EB}; and the forward voltage drop of the collector to base diode, V_{CB}. The methods described in this standard refer to the thermal resistance between specified reference points of the device. For this type of measurement, power is applied to the device at two values of case, ambient, or other reference point temperature, such that identical values of I_{CBO}, V_{EB}, or V_{CB} are read during the cooling portion of the measurement.

METHOD 3101.2

THERMAL IMPEDANCE TESTING OF DIODES

1. Purpose. The purpose of this test is to determine the thermal performance of diode devices. This can be done in two ways, steady-state thermal impedance or thermal transient testing. Steady-state thermal impedance (referred to as thermal resistance) determines the overall thermal performance of devices. A production-oriented screening process, referred to as thermal transient testing, is a subset of thermal impedance testing and determines the ability of the diode chip-to-header interface to transfer heat from the chip to the header, and is a measure of the thermal quality of the die attachment. It is relevant to designs which use headers, or heat conducting plugs, with mass and thermal conductivity allowing effective discrimination of poor die attachments. This is particularly true with power devices. The method can be applied to rectifier diodes, transient voltage suppressors, power zener diodes, and some zener, signal and switching diodes. This method is intended for production monitoring, incoming inspection, and pre-burn in screening applications.

1.1 Background and scope for thermal transient testing. Steady-state thermal response (thermal resistance) and thermal transient response (related to and often called thermal impedance or thermal transient impedance) of semiconductor devices are sensitive to the presence of these voids in the die . attachment material between the semiconductor chip and package since voids impede the flow of heat from the chip to the substrate (package). Due to the difference in the thermal time constants of the chip and package, the measurement of transient thermal response can be made more sensitive to the presence of voids than can the measurement of steady-state thermal response. This is because the chip thermal time constant is generally several orders of magnitude shorter than that of the package. Thus, the heating power pulse width can be selected so that only the chip and the chip-to-substrate interface are heated during the pulse by using a pulse width somewhat greater than the chip thermal time constant but less than that of the substrate. Heating power pulse widths ranging from 1 to 400 ms for various package designs have been found to satisfy this criterion. This enables the detection of voids to be greatly enhanced, with the added advantage of not having to heatsink the DUT. Thus, the transient thermal response technique is less time-consuming than the measurement of thermal resistance for use as a manufacturing screen, process control, or incoming inspection measure for die attachment integrity evaluation.

2. Definitions. The following symbols and terminology shall apply for the purpose of this test method:

a. V_F: The forward biased junction voltage of the DUT used for junction temperature sensing.

V_{Fi}: The Initial V_F value before application of heating power.

V_{Ff}: The final V_F value after application of heating power.

b. ΔV_F: The change in the TSP, V_F, due to the application of heating power to the DUT.

c. I_H: The current applied to the DUT during the heating time in order to cause power dissipation.

d. V_H: One heating voltage resulting from the application of I_H to the DUT.

e. P_H: The heating power pulse magnitude; product of V_H and I_H.

f. t_H: The duration of P_H applied to the DUT.

g. I_M: The measurement current used to forward bias the temperature sensing diode junction for measurement of V_F.

h. t_{MD}: Measurement delay time is defined as the time from the start of heating power (PM) removal to the start of the final V_F measurement time, referred to as t_{sw}.

i. t_{SW}: Sample window time during which final V_F measurement is made. The value of t_{SW} should be small; it can approach zero if an oscilloscope is used for manual measurements.

j. VTC: Voltage-temperature coefficient of V_F with respect to T_J at a fixed value of I_H; in mV/°C.

k. K: Thermal calibration factor equal to the reciprocal of VTC; in °C/mV.

1. CU: The comparison unit, consisting of ΔV_F divided by V_H, that is used to normalize the transient thermal response for variations in power dissipation; in units of mV/V.

m. T_J: The OUT junction temperature.

n. ΔT_J: The change in T_J caused by the application of PM for a time equal to t_H.

o. $Z_{\Theta JR}$: Thermal impedance from device junction to a time defined reference point; in units of °C/W.

$Z_{\Theta JC}$: Thermal impedance from device junction to a point on the outside surface of the case immediately adjacent to the device chip measured using time equal time constant of device; in units of °C/W.

p. $R_{\Theta JR}$: Thermal resistance from device junction to a defined reference point; in units of °C/W. (Also shown as Θ_{JX} in publications.)

$R_{\Theta JC}$: Thermal resistance from device junction to a point on the outside surface of the case immediately adjacent to the device chip; in units of °C/W. (Also shown as Θ_{JC} in publications.)

$R_{\Theta JA}$: Thermal resistance from device junction to an ambient (world); in units of °C/W. (Also shown as Θ_{JA} in publications.)

q. t_{F4}: Step trace time.

r. VAC: Bridge input ac voltage per leg.

3. Apparatus. The apparatus required for this test shall include the following, configured as shown on figure 3101-1, as applicable to the specified test procedure:

a. A constant current source capable of adjustment to the desired value of I_H and able to supply the V_H value required by the DUT. The currant source should be able to maintain the desired current to within ±2 percent during the entire length of heating time.

b. A constant current source to supply I_M with sufficient voltage compliance to turn the TSP junction fully on.

c. An electronic switch capable of switching between the heating period conditions and measurement conditions in a time frame short enough to avoid DUT cooling during the transition; this typically requires switching in the microsecond or tens of microseconds range.

d. A voltage measurement circuit capable of accurately making the V_{Ff} measurement within the time. frame with millivolt resolution.

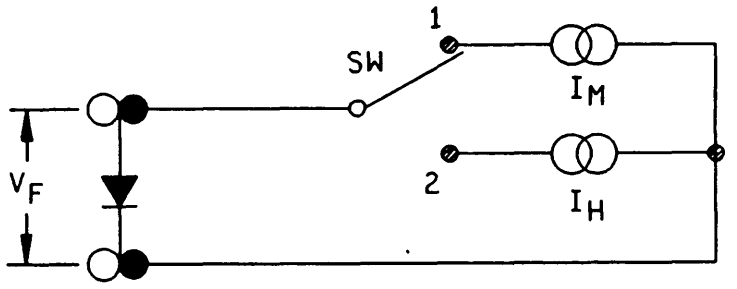

FIGURE 3101-1. Thermal impedance testing setup for diodes.

4. Test operation.

4.1 General description. The test begins with the adjustment of I_M and I_H to the desired values. The value of I_H is usually at least 50 times greater than the value of I_M. Then with the electronic switch in position 1, the value of V_{Fi} is measured. The switch is then moved to position 2 for a length of time equal to t_H and the value of V_H is measured. Finally, at the conclusion of t_H, the switch is again moved to position 1 and the V_{Ff} value is measured within a time period defined by t_{MD} (or $t_{MD} + t_{SW}$, depending on the definitions stated previously). The two current sources are then turned off at the completion of the test.

The voltage and current waveforms for all three time periods of the test are shown below on figure 3101-2.

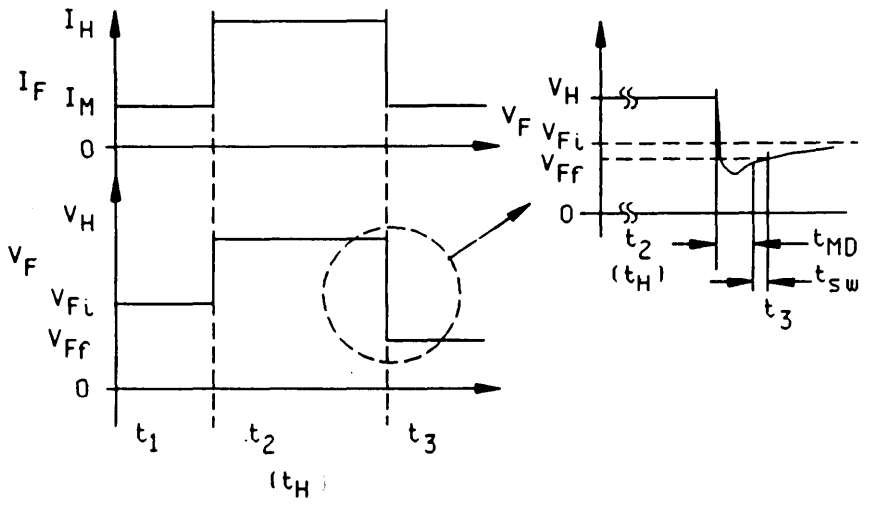

FIGURE 3101-2. Thermal impedance testing waveforms.

4.2 Notes.

a. Some test equipment may provide a ΔV_F directly instead of V_{F1} and V_{Ff}; this is an acceptable alternative. Record the value of ΔV_F.

b. Some test equipment may provide Θ_{JX} directly instead of V_{F1} and V_{Ff} for thermal resistance calculations; this is an acceptable alternative. Record the value of Θ_{JX}.

c. Alternative waveforms, as may be generated by ATE using the general principles of this method, may be used upon approval of the qualifying activity.

5. Acceptance limit.

5.1 General discussion. Variations in diode characteristics from one manufacturer to another cause difficulty in l stablishing a single acceptance limit for all diodes tested to a given specification. Ideally, a single acceptance limit value for ΔV_F would be the simplest approach. However, different design, materials, and processes can alter the resultant ΔV_F value for a given set of test conditions. Listed below are several different approaches to defining acceptance limits. The ΔV_F limit is the simplest approach and is usually selected for screening purposes. 5.3 through 5.6 require increasingly greater detail or effort.

5.2 ΔV_F limit. A single ΔV_F limit is practical if the K factor and V_H values for all diodes tested to a given specification are nearly identical. Since these values may be different for different manufacturers, the use of different limits is likely to more accurately achieve the desired intent. (A lower limit does not indicate a better die bond when comparing different product sources.) The diode specifications would list the following test conditions and measurement parameters:

I_H (in A)

t_H (in ms)

I_M (in mA)

t_{MD} (in μs)

t_{SW} (in μs)

ΔV_F (maximum limit value, in mV)

5.3 ΔT_J limit. (Much more involved than ΔVF, but useful for examining questionable devices.) Since ΔT_J is the product of K (in accordance with 6.) and ΔV_F, this approach is the same as defining a maximum acceptable junction temperature rise for a given set of test conditions.

5.4 CU limit. (Slightly more involved than ΔT_J.) The ΔT_J limit approach described above does not take into account potential power dissipation variations between devices. The V_H value can vary, depending on chip design and size, thus causing the power dissipation during the heating time to be different from device to device. This variation will be small within a lot of devices produced by a single manufacturer but may be large between manufacturers. A CU limit value takes into account variations in power dissipation due to differences in V_H by dividing the ΔV_F value by V_H.

5.5 (K.CU) limit. (Slightly more involved but provides greater detail.) This is a combinational approach that takes into account both K factor and power dissipation variations between devices.

5.6 $Z_{\theta JX}$ limit. (For full characterization; or as required on device detail specifications.) The thermal impedance approach uses an absolute magnitude value specification that overcomes the problems associated with the other approaches. Thermal impedance is time dependent and is calculatedas follows:

$$Z_{\theta JX} = \frac{\Delta T_J}{P_D} = \left| \frac{(K)(\Delta V_F)}{(I_H)(V_H)} \right| \text{°C/W}$$

5.7 $R'_{\theta JX}$ limit. (For thermal resistance specification testing.) The thermal resistance to some defined point, such as the case, is an absolute magnitude value specification used for equilibrium conditions. The t_H heating time must therefore be l xtendd to appreciably longer times (typically 20 to 50 seconds). In the example of $R_{\theta JC}$ measurements, the case must be carefully stabilized and monitored in temperature which requires an infinite heat sink for optimum results. The ΔT_J is the difference in junction temperature to the case temperature for the example of $R'_{\theta JC}$.

$$R_{\theta JX} = \frac{\Delta T_J}{P_D} = \left| \frac{(K)(\Delta V_F)}{(I_H)(V_H)} \right| \text{°C/W}$$

5.8 General comment for thermal transient testing. One potential problem in using the thermal transient testing approach lies in trying to make accurate enough measurements with sufficient resolution to distinguish between acceptable and nonacceptable diodes. As the diode-under-test current handling capability increases, the thermal impedance under transient conditions will become a very small value. This raises the potential for rejecting good devices and accepting bad ones. Higher I_H values must be used in this case.

6. Measurement of the TSP V_F. The calibration of V_F versus T_J is accomplished by monitoring V_{SD} for the required value of I_M as the environmental temperature (and thus the DUT temperature), and is varied by external heating. It is not required if the acceptance limit is ΔV_F (see 5.2), but is relevant to the other acceptance criteria (see 5.3 through 5.6). The magnitude of I_M shall be chosen so that V_F is a linearly decreasing function over the normal T_J range of the device. I_M must be large enough to ensure that the diode junction is turned on but not large enough to cause significant self-heating. An example of the measurement method and resulting calibration curve is shown on figure 3101-3.

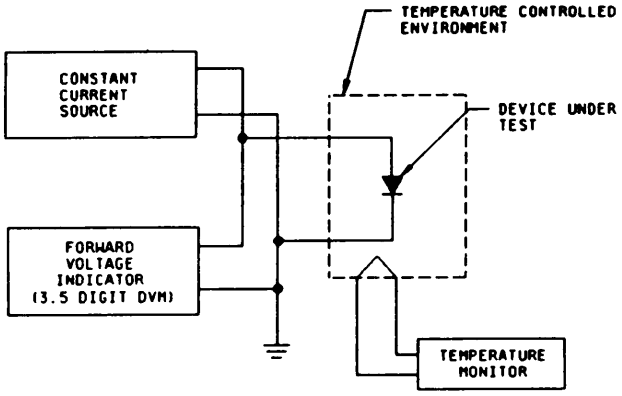

Step 1: Measure V_{F1} at T_{J1} using I_M
Step 2: Measure V_{F2} at T_{J2} using I_M

Step 3: $K = \left| \frac{T_{J2} - T_{J1}}{V_{F2} - V_{F1}} \right|$ °C/mV

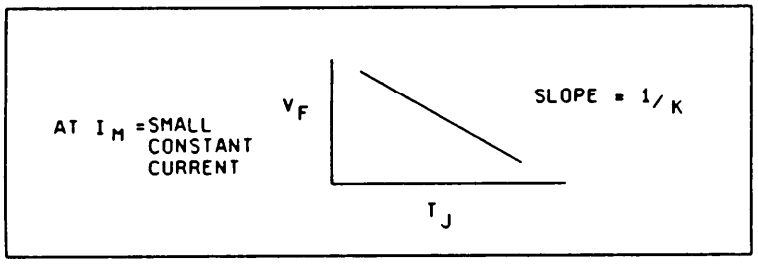

I_M: must be large enough to overcome surface leakage effects but small enough not to cause significant self-heating.

T_J: is externally applied: (e.g., via oven, liquid) environment.

FIGURE 3101-3. Example curve of V_F versus T_J.

A calibration factor K (which is the reciprocal of the slope of the curve on figure 3101-3) can be defined as:

$$K = \left| \frac{T_{J2} - T_{J1}}{V_{F2} - V_{F1}} \right| \text{ °C/mV}$$

It has been found experimentally that the K-factor variation for all devices within a given device type class is small. The' usual procedure is to perform a K factor calibration on a 10 to 12 piece sample from a device lot and determine the average K and standard deviation (ó). If ó is less than or equal to three percent of the average value of K, then the average value of K can be used for all devices within the lot. If ó is greater than three percent of the average value of K, then all the devices in the lot shall be calibrated and the individual values of K shall be used in determining device acceptance.

7. Establishment of test conditions and acceptance limits. Thermal resistance measurements require that I_H be equal to the required value stated in the device specifications, typically at rated current or higher. . Values for t_H, t_{MD}, and heat sink conditions are also taken from the device specifications. The steps shown below are primarily for thermal transient testing and thermal characterization purposes.

The following steps describe how to set up the test conditions and determine the acceptance limits for implementing the transient thermal test for die attachment evaluation using the apparatus and definitions stated above.

7.1 Initial device testing procedure. The following steps describe in detail how to set up the apparatus described previously for proper testing of various diodes. Since this procedure thermally characterizes the diode out to a point in heating time required to ensure heat propagation into the case (i.e., the Θ_{JX} condition), an appropriate heat sink should be used or the case temperature should be monitored.

Step 1: From a 20 to 25 piece sample, pick any one diode to start the setup process. Set up the test apparatus as follows:

I_H = 1.OA	(Or some other desired value near the DUTs normal operating current.)
t_H = 10-50 ms	Unless otherwise specified, for most devices rated up to 15 W power dissipation.
50 - 100 ms	Unless otherwise specified, for most devices rated up to 200 W power dissipation.
≥250 ms	For steady state thermal resistance measurement. The pulse must be shown to correlate to steady state conditions before it can be substituted for steady state condition.
t_{MD} = 100 µs max	A larger value may be required on power devices with magnetic package elements which generate nonthermally induced transients; unless otherwise specified, this would be observed in the t_3 region of figure 3101-2.
I_M = 10 mA	(Or some nominal value approximately two percent, or less, of I_H.)

Step 2: Insert device into the apparatus test fixture and initiate a test. (For best results, a test fixture that offers some form of heat sinking would be desirable. Heat sinking is not needed if either the power dissipation during the test is well within the diode's free-air rating or the maximum heating time is limited to less than that required for the heat to propagate through the case.)

Step 3: If ΔV_F is in the 5 to 80 mV range, then proceed to the next step. This range approximately corresponds to a junction temperature change of roughly +lO°C to +20°C and is sufficient for initial comparison purposes.

If ΔV_F is less than 5 mV, return to step 1 and increase heating power into device by increasing I_H.

If ΔV_F is greater than 80 mV, approximately corresponding to a junction temperature change greater than +40°C, it would probably be desirable to reduce the heating power by returning to step 1 and reducing I_H.

NOTE: The test equipment shall be capable of resolving ΔV_F to within five percent. If not, the higher value of ΔV_F must be selected until the five percent tolerance is met.

NOTE: Two different devices can have the same junction temperature rise even when P_H is different, due to widely differing V_H. Within a given lot, however, a higher V_H is more likely to result in a higher junction temperature rise. For such examples, this screen can be more accurately accomplished using the CU value. As defined in 2., CU provides a comparison unit that takes into account different device V_H values for a given I_H test condition.

Step 4: Test each of the sample devices and record the $\Delta' V_F$ and CU data.

Step 5: Select out the devices with the highest and lowest values of CU and put the remaining devices aside.

The $\Delta' V_F$ values can be used instead of CU if the measured values of V_H are very tightly grouped around the average value.

Step 6: Using the devices from step 5, collect and plot the heating curve data for the two devices in a manner similar to the examples shown on figure 3101-4.

Step 7: Interpretation of the heating curves is the next step. Realizing that the thermal characteristics of identical chips should be the same if the heating time (t_H) is less than or equal to the thermal time constant of the chip, the two curves should start out the same for the low values of t_H. Nonidentical chips (thinner or smaller in cross section) will have completely different curves, even at the smaller values of t_H. As the value of t_H is increased, thereby overcoming the chip thermal constant, heat will have propagated through the chip into the die attachment region. Since the heating curve devices of step 5 were specifically chosen for their difference, the curves of figure 3101-4 diverge after t_H reaches a value where the die attachment variance has an affect on the device junction temperature. Increasing t_H further will probably result in a flattening of the curve as the heating propagates in the device package. If the device package has little thermal mass and is not well mounted to a good heat sink, the curve will not flatten very much, but will show a definite change in slope.

Step 8: Using the heating curve, Select the appropriate value of t_H to correspond to the inflection point in the transition region between heat in the chip and heat in the package.

If there are several different elements in the heat flow path: Chip, die attachment, substrate, substrate attach, and package for example in a hybrid, there will be several plateaus and transitions in the heating curve. Appropriate selection of t_H will optimize evaluation sensitivity to other attachment l reas.

Step 9: Return to the l pparatus and set t_H equal to the value determined from step 8.

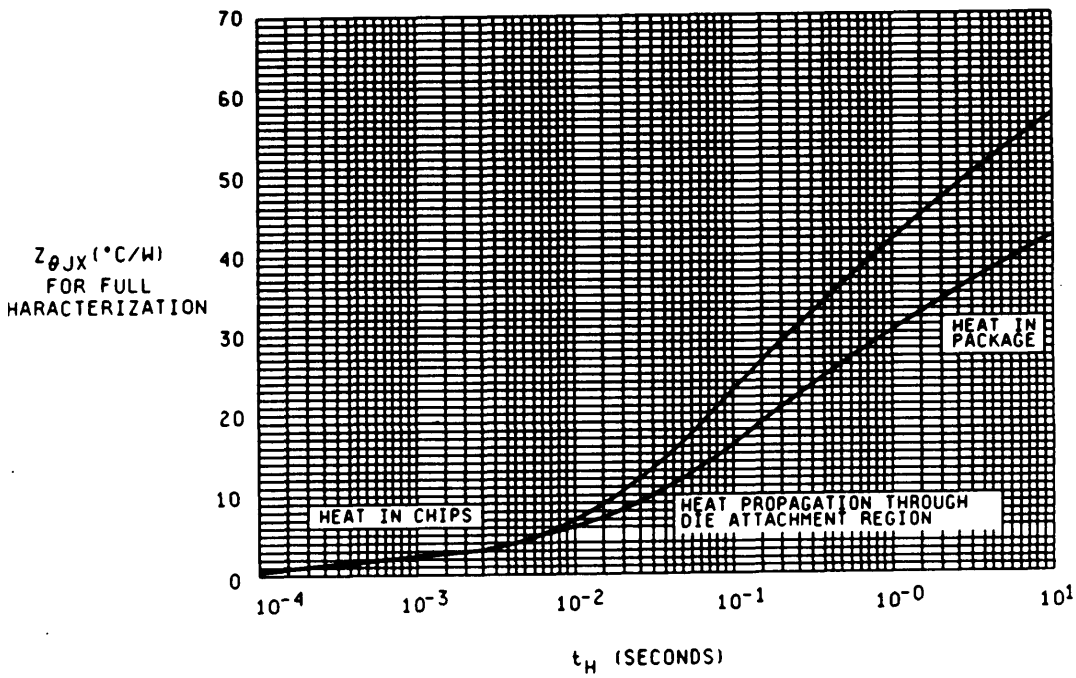

FIGURE 3101-4. Heating curves for two extreme devices.

Step 10: Because the selected value of t_H is much less than that for thermal equilibrium, it is possible to significantly increase the heating power without degrading or destroying the device. The increased power dissipation within the DUT will result in higher ΔV_F or CU values that will make determination of acceptable and nonacceptable devices much easier.

Step 11: The pass/fail limit, the cut-off point between acceptable and nonacceptable devices, can be established in a variety of ways:

a. Correlation to other die attachment evaluation methods, such as die shear and x-ray, while these two methods have little actual value from a thermal point of view, they do represent standardization methods as described in various military standards.

b. Maximum allowable junction temperature variations between devices, since the relationship between ΔT_J and ΔV_F is about 0.5°C/W, the junction temperature spread between devices can be easily determined. The T_J predicts reliability. Conversely, the T_J spread necessary to meet the reliability projections can be translated to a ΔV_F or CU value for pass/fail criteria.

To fully utilize this approach, it will be necessary to calibrate the devices for the exact value of the T_J to V_F characteristic. The characteristic's slope, commonly referred to as K factor, is easily measured on a sample basis using a voltmeter, environmental chamber, temperature indicator, and a power supply setup for forcing, temperature indicator, and a power supply setup as described in 6. A simple set of equations yield the junction temperature once K and ΔV_F are known:

$$\Delta T_J = (K)\ (\Delta V_F)$$

$$T_J = T_A + \Delta T_J$$

Where T_A is the ambient or reference temperature. For thermal transient test conditions, this temperature is usually equivalent to lead temperature (T_L) for axial lead devices or case temperature (T_C) for case mounted devices.

c. Statistically from a 20 to 25 device sample; the distribution of ΔV_F or CU values should be a normal one with defective devices out of the normal range. Figure 3101-5 shows a ΔV_F distribution for a sample lot of diodes. NOTE: The left-hand side of the histogram envelope is fairly well defined but the other side is greatly skewed to the right. This comes about because the left-hand side is constrained by the absolutely best heat flow that can be obtained with a given chip assembly material and process. The other side has no such constraints because there is no limit as to how poorly a chip is mounted.

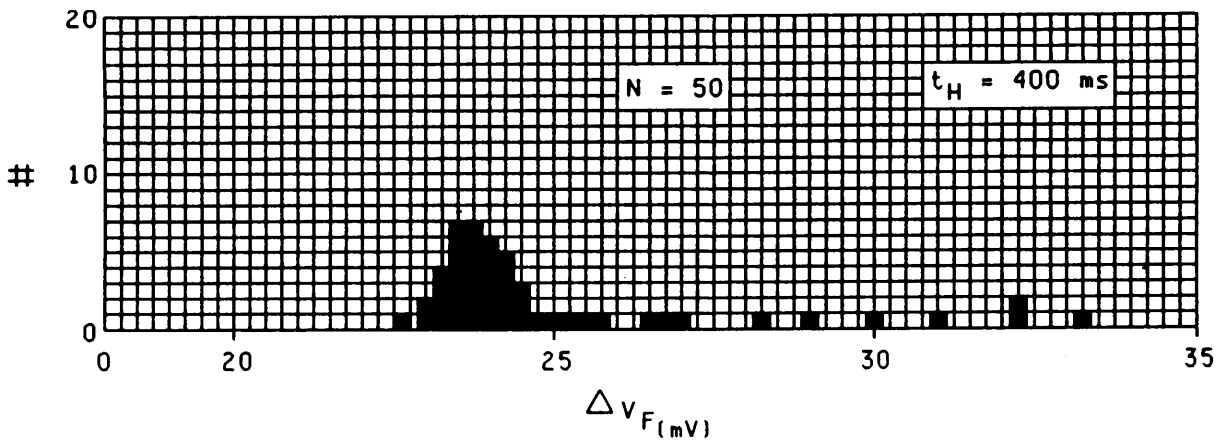

FIGURE 3101-5. Typical ΔV_F distribution.

The usual rule of thumb in setting the maximum limit for ΔV_F or CU is to use the distribution average value and one standard deviation (ó). For example:

$$(\Delta V_F)\Big|_{\text{high limit}} = \Delta V_F + X\sigma_\Delta$$

$$(CU)\Big|_{\text{high limit}} = CU + X\sigma_\Delta$$

Where X = 3 in most cases.

The statistical data required is obtained by testing 25 or more devices under the conditions of step 11.

The maximum limit determined from this approach should be correlated to the diode's specified thermal resistance. This will ensure that the $\Delta' V_F$ or CU limits do not pass diodes that would fail the thermal resistance requirement.

Step 12: Once the test conditions and pass/fail limit have been determined, it is necessary only to record this information for future testing requirements of the same device in the same package.

The steps listed hereto are conveniently summarized in table 3101-I.

TABLE 3101-I. Summary of test procedure steps.

General description		Steps	Comments
A	Initial setup	1 through 4	Approximate instrument settings to find variations among devices in 10 to 15 piece sample.
B	Heating curve generation	5 through 6	Using highest and lowest reading devices, generate heating curves.
C	Heating curve interpretation	7 through 9	Heating curve is used to find more appropriate value for t_H corresponding to heat in the die attachment area (or some other desired interface in the heat flow path).
D	Final setup	10	Heating power applied during t_H is increased in order to improve measurement sensitivity to variations among devices.
E	Pass-fail determination	11 through 12	A variety of methods is available for setting the fall limit; the statistical approach is the fastest and easiest to implement.

7.2 Routine device thermal transient testing procedure. Once the proper control settings have been determined for a particular device type from a given manufacturing process or vendor, repeated testing of that device type simply requires that the same test conditions be used as previously determined.

New device types or the same devices manufactured with a different process will require a repeat of 7.1 for proper thermal transient test conditions.

8. Test conditions and measurements to be specified and recorded.

8.1 Thermal transient aand equilibrium measurements.

8.1.1 Test conditions. Specify the following test conditions:

a. I_M measuring current _____ mA

b. I_H heating current _____ A

c. t_H heating time _____ ms

d. t_{MD} measurement time delay _____ µs

e. t_{SW} sample window time _____ µs

8.1.2 Data. Record the following data:

a. V_{F1} initial forward voltage _____ V

b. V_H heating voltage _____ V

c. V_{Ff} final forward voltage _____ V

(NOTE: Some test equipment may provide a ΔV_F instead of V_{F1} and V_{Ff}; this is an acceptable alternative. Record the value of ΔV_F.

Some test equipment may provide direct display of calculated CU or Θ_{JX}; this is an acceptable alternative. Record the value of CU or Θ_{JX}.)

8.2 K factor calibration. (Optional for criteria 8.3a or 8.3b, mandatory for 8.3c, 8.3d, or 8.3e.)

8.2.1 Test conditions. Specify the following test conditions:

a. I_H current magnitude _____ mA

b. Initial junction temperature _____ °C

c. Initial V_F voltage _____ mV

d. Final junction temperature _____ °C

e. Final V_F voltage _____ mV

8.2.2 K factor. Calculate K factor in accordance with the following equation:

$$K = \left| \frac{T_{J1} - T_{J2}}{V_{F1} - V_{F2}} \right| \quad °C/mV$$

K factor _____ °C/mV

8.3 Specification limit calculations. One or more of the following should be measured or calculated, as called for on the device specification (see 5.1):

a. ΔV_F _____ mV

b. CU _____ mV/V

c. ΔT_J _____ °C

d. KŽCU _____ °C/v

e. $Z_{\Theta JX}$ _____ °C/W

f. Θ_{JX} _____ °C/W

METHOD 3103

THERMAL IMPEDANCE MEASUREMENTS FOR INSULATED GATE BIPOLAR TRANSISTORS

(DELTA GATE-EMITTER ON VOLTAGE METHOD)

1. Purpose. The purpose of this test method is to measure the thermal impedance of the IGBT under the specified conditions of applied voltage, current, and pulse duration. The temperature sensitivity of the gate-emitter ON voltage, under conditions of applied collector-emitter voltage and low emitter current, is used as the junction temperature indicator. This method is particularly suitable to enhancement mode, power IGBTs having relatively long thermal response times. This test method is used to measure the thermal response of the junction to a heating pulse. Specifically, the test may be used to measure dc thermal resistance and to ensure proper die mountdown to its case. This is accomplished through the appropriate choice of pulse duration and heat power magnitude. The appropriate test conditions and limits are detailed in 6.

2. Definitions. The following symbols and terms shall apply for the purpose of this test method:

a. I_M: Emitter current applied during measurement of the gate-emitter ON voltage.

b. I_H: Heating current through the collector or emitter lead.

c. V_H: Heating voltage between the collector and emitter.

d. P_H Magnitude of the heating power pulse applied to DUT in watts; the product of I_H and V_H.

e. t_H: Heating time during which P_H is applied.

f. VTC: Voltage-temperature coefficient of $V_{GE(ON)}$ with respect to T_J; in mV/°C.

g. K: Thermal calibration factor equal to reciprocal of VTC; in °C/mV.

h. T_J: Junction temperature in degrees Celsius.

T_{J1}: Junction temperature in degrees Celsius before start of the power pulse.

T_{Jf}: Junction temperature in degrees Celsius at the end of the power pulse.

i. T_X: Reference temperature in degrees Celsius.

T_{X1}: Initial reference temperature in degrees Celsius.

T_{Xf}: FinaL reference temperature in degrees Celsius.

j. $V_{GE(ON)}$: Gate-emitter ON voltage in millivolts.

$V_{GE(ON)i}$: Initial gate-emitter ON voltage in millivolts.

$V_{GE(ON)f}$: Final gate-emitter ON in millivolts.

k. $V_{GE(M)}$: Gate-emitter voltage during measurement periods.

$V_{GE(H)}$: Gate-emitter voltage during heating periods.

l. $V_{CE(M)}$: Collector-emitter. voltage during measurement periods.

$V_{CE(H)}$: Collector-emitter voltage during heating periods.

m. V_{CG}: Collector-gate voltage, adjusted to provide appropriate V_{CE}.

n. t_{MD}: Measurement delay time is defined as the time from the removal of heating power P_H to the start of the $V_{GE(ON)}$ measurement.

o. t_{SW}: Sample window time during which final $V_{GE(ON)}$ measurement is made.

p. $Z_{\Theta JX}$: Transient junction-to-reference point thermal impedance in °C/W. $Z_{\Theta JX}$ for spedified power pulse duration is:

$$Z_{\theta JX} = \left(T_{jf} - T_{ji} - \frac{\Delta T_x}{P_H} \right)$$

Where: ΔT_x = change in reference point temperature during the heating pulse (see 5.2 and 5.4 for short heating pulses, e.g., die attach evaluation, this term is normally negligible.)

3. Apparatus. The apparatus required for this test shall include the following as applicable to the specified test procedure.

3.1 Case temperature measurement. A thermocouple for measuring the case temperature at a specified reference point. The recommended reference point shall be located on the case under the heat source. Thermocouple material shall be copper-constantan (type T) or equivalent. The wire size shall be no larger than AWG size 30. The junction of the thermocouple shall be welded, rather than soldered or twisted, to form a bead. The accuracy of the thermocouple and its associated measuring system shall be ±0.5°C. Proper mounting of the thermocouple to ensure intimate contact to the reference point is critical for system accuracy.

3.2 Controlled temperature environment. A controlled temperature environment capable of maintaining the case temperature during the device calibration procedure to within ±1°C over the temperature range of +23°C to +l00°C, the recommended temperatures for measuring K-factor.

3.3 K factor calibration. A K factor calibration setup, as shown on figure 3103-1, that measures $V_{GE(ON)}$ for the specified values of V_{CE} and I_M in an environment where temperature is both controlled and measured. A temperature controlled circulating fluid bath is recommended. The current source must be capable of supplying I_M with an accuracy of ±2 percent. The voltage source V_{CG} is adjusted to supply V_{CE} with an accuracy of *2 percent. The voltage measurement of $V_{GE(ON)}$ shall be made with a voltmeter capable of 1 mV resolution. The device-to-current source wire size shall be sufficient to handle the measurement current (AWG size 22 stranded is typically used for up to 100 mA).

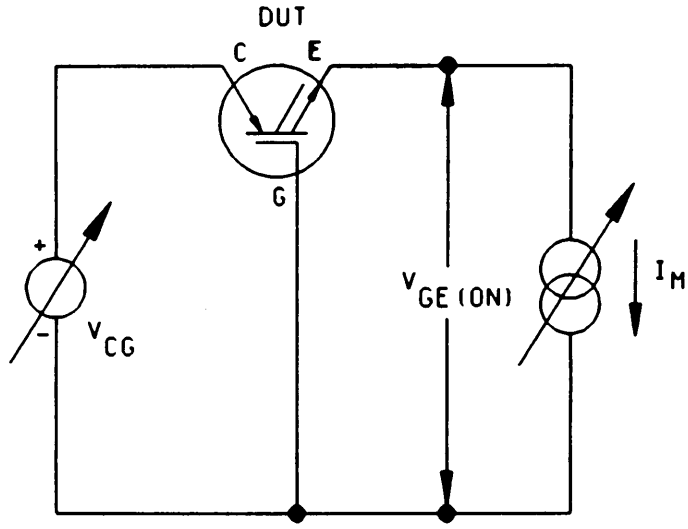

3103-1. K factor calibration setup.

3.4 Thermal testing. There are two approaches to the actual thermal testing, either the common-gate or the common-source method. Both methods work equally well, although the common-source method may be more reliable and less potentially damaging to the DUT. The figures and description below describe the thermal measurement for n-channel enhancement mode devices. Opposite polarity devices can be tested by appropriately reversing the various supplies. Depletion mode devices can be tested by applying the gate-emitter voltage (V_{GE}) in the appropriate manner.

3.4.1 Common-gate thermal test circuit. A common-gate configuration test circuit used to control the device and to measure the temperature using the gate-emitter ON voltage as the temperature sensing parameter as shown on figure 3103-2. Polarities shown are for n-channel devices but the circuit may be used for p-channel types by reversing the polarities of the voltage and current sources.

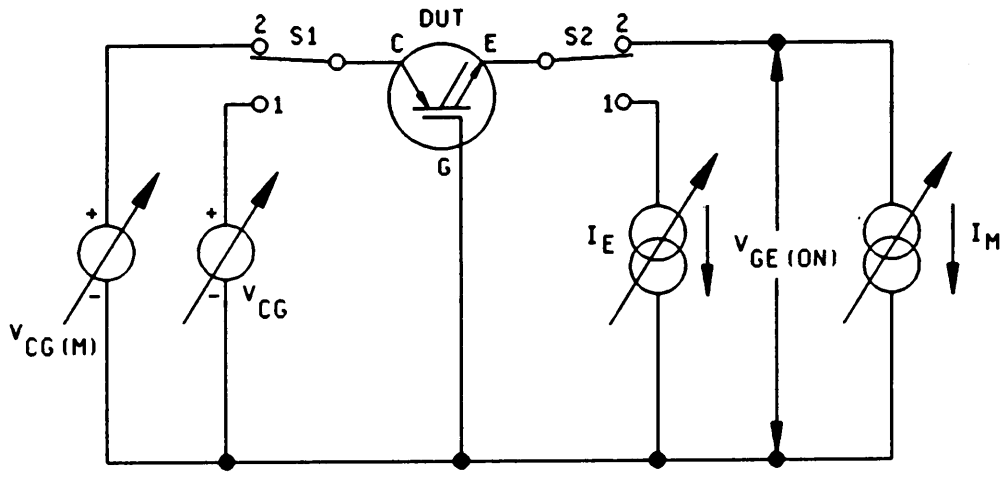

FIGURE 3103-2. Common-gate thermal impedance measurement circuit (gate-emitter on voltage method).

The circuit consists of the DUT, two voltage sources, two current sources, and two electronic switches. During the heating phase of the measurement, switches S1 and S2 are in position 1. The values of V_{CG} and I_E are adjusted to achieve the desired values of I_C and V_{CE} for the P_H "heating" condition.

To measure the initial and post heating pulse junction temperatures of the DUT, switches S1 and S2 are each switched to position 2. This puts the gate at the measurement voltage level $V_{CG(M)}$ and connects the current source I_M to supply measurement current to the emitter. The values of $V_{CG(M)}$ and I_M must be the same as used in the K factor calibration if actual junction temperature rise data is required. Figures 3103-4 and 3103-5 show the waveforms associated with the three segments of the test.

3.4.2 Common-source thermal test circuit. A common-source configuration test circuit used to control the device and to measure the temperature using the gate-emitter ON voltage as the temperature sensing parameter as shown on figure 3103-3. Polarities shown are for n-channel devices but the circuit may be used for p-channel types by reversing the polarities of the voltage and current sources.

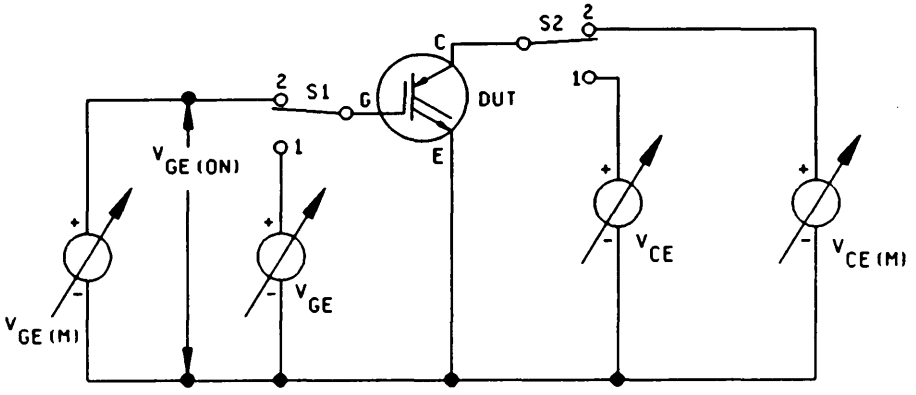

NOTE: The circuit consists of the OUT, four voltage sourcoe, and two electronic switches. During the heating phase of the measurement, switches S1 and S2 are in position 1. The values of V_{CE} and V_{GE} are adjusted to achieve the desired values of I_C and V_{CE} for the P_H "heating" condition.

FIGURE 3103-3. Common-source thermal impedance measurement circuit (gate-emitter on voltage method).

To measure the initial and post heating pulse junction temperatures of the DUT, switches S1 and S2 are each switched to position 2. This puts. the collector at the measurement voltage level $V_{CE(M)}$. and the gate at $V_{GE(M)}$, which must be adjusted to obtain I_M. The values of $V_{CE(M)}$ and I_M must be the same as used in the K factor calibration if actual junction temperature rise data is required. Figures 3103-4 and 3103-5 show the waveforms associated with the three segments of the test.

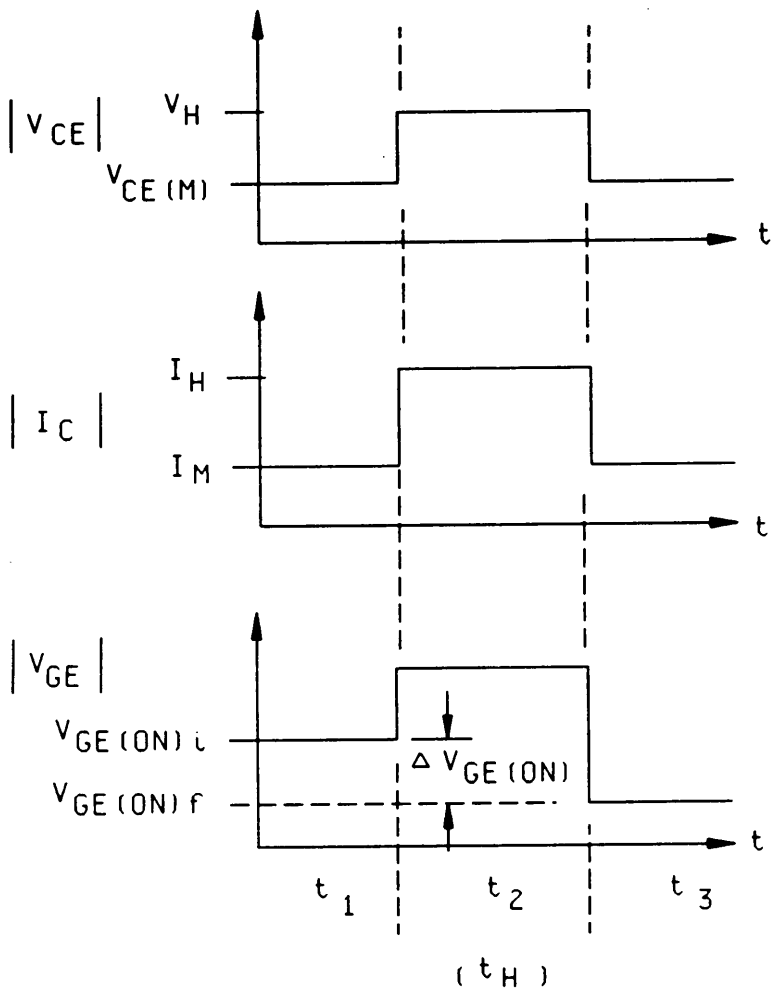

FIGURE 3103-4. Device waveforms during the three segments of the thermal transient test.

The value of t_{MD} is critical to the accuracy of the measurement and must be properly specified in order to ensure measurement repeatability. Note that some test equipment manufacturers include the sample and hold window time t_{SW} within their t_{MD} specification.

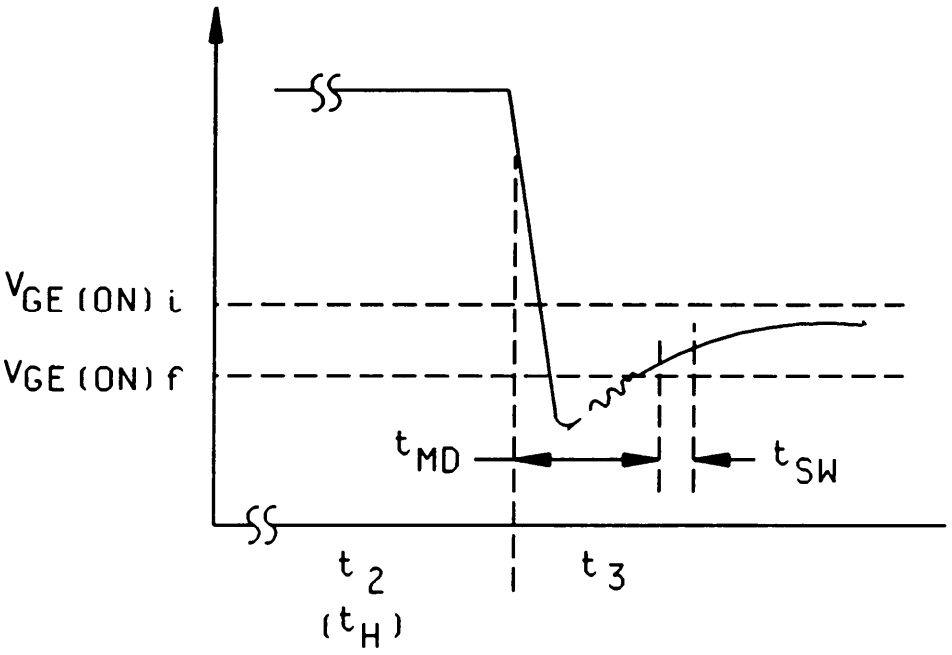

FIGURE 3103-5. Second V_{GE} measurement waveform.

NOTE : The circuits for both common-gate and common-source thermal measurements can be-modified so that V_{CE} is applied during both measurement and heating periods if the value of V_{CE} - is at least ten times the value of $V_{GE(ON)}$. Further, the common-gate circuit can be modified so that I_M i: continually applied as long as the I_E current source can be adjusted for the desired value of heating current.

3.5 Source-drain forward voltage. Suitable sample-and-hold voltmeter or oscilloscope to measure source-drain forward voltage at specified times. $V_{GE(ON)}$ shall be measured to within 5 mV, or within 5 percent of ($V_{GE(ON)i}$ - $V_{GE(ON)f}$), whichever is less.

4. Measurement of the TSP. The required calibration of $V_{GE(ON)}$ versus T_J is accomplished by monitoring $V_{GE(ON)}$ for the required values of V_{CE} and I_M as the heat sink temperature (and thus the DUT temperature) is varied by external heating. The magnitudes of V_{CE} and I_M shall be chosen so that $V_{GE(ON)}$ is a linearly decreasing function over the expected range of T_J during the power pulse. For this condition, V_{CE} must be at least three times $V_{GE(ON)}$. I_M must be large enough to ensure that the device is turned on but not so large as to cause any significant self-heating. (This will normally be 1 mA for low power devices and up to 100 mA for high power ones.) An example calibration curve is shown on figure 3103-6.

4.1 K factor calibration. A calibration factor K (which is the reciprocal of VTC or the slope of the curve on figure 3103-4) can be defined as:

$$K = \frac{1}{VTC} = \left| \frac{T_{J1} - T_{J2}}{V_{GE(ON)1} - V_{GE(ON)2}} \right| \ °C/mV$$

It has been found experimentally that the K-factor variation for all devices within a given device type class is small. The usual procedure is to perform a K factor calibration on a 10 to 12 piece sample from a device lot and determine the average K and standard deviation (σK). If 'K is less than or equal to three percent of the average value of K, then the average value of K can be used for all devices within the lot. If 'K is greater than three percent of the average value of K, then all the devices in the lot shall be calibrated and the individual values of K shall be used in thermal impedance calculations or in correcting $\Delta V_{GE(ON)}$ values for comparison purposes.

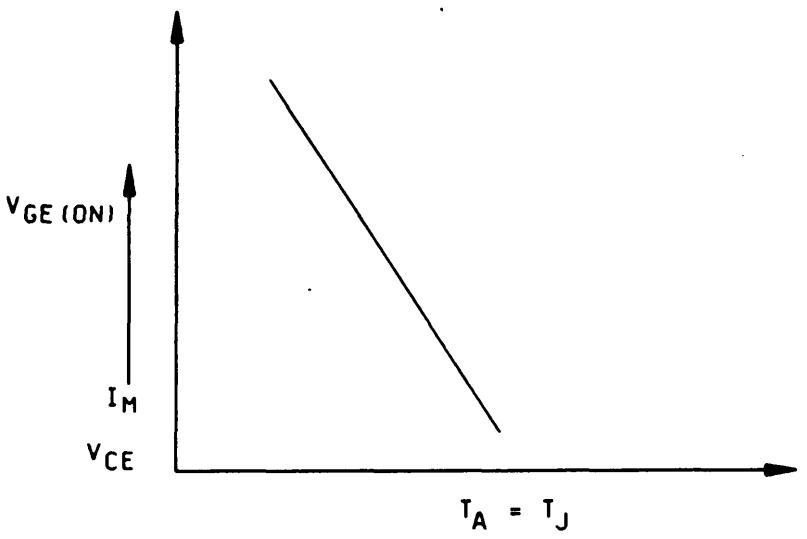

FIGURE 3103-6. Example curve of $V_{GE(ON)}$ versus T_J.

When screening to ensure proper die attachment within a given lot, this calibration step is not required, (e.g., devices of a single manufacturer with identical PIN and case style). In such cases, the measure of thermal response may be $\Delta V_{GE(ON)}$ for a short heating pulse, and the computation of ΔT_J or $Z_{\theta JX}$ is not necessary. (For this purpose, t_H shall be 10 ms for TO-39 size packages and 100 ms for TO-3 packages.)

5. Calibration. K factor must be determined according to the procedure outlined in 4, except as noted in 4.1.

5.1 Reference point temperature. The reference point is usually chosen to be on the bottom of the transistor case directly below the semiconductor chip in a TO-204 metal can or in close proximity to the chip in other styles of packages. Reference temperature point location must be specified and its temperature shall be monitored using the thermocouple mentioned in 3.1 during the preliminary testing. If it is ascertained that T_x increases by more than five percent of measured junction temperature rise during the power pulse, then either the heating power pulse magnitude must be decreased, the DUT must be mounted in a temperature controlled heat sink, or the calculated value of thermal impedance must be corrected to take into account the thermal impedance of the reference point to the cooling medium or heat sink.

Temperature measurements for monitoring, controlling or correcting reference point temperature changes are not required if the t_H value is low enough to ensure that the heat generated within the DUT has not had time to propagate through the package. Typical values of t_H for this case are in the 10 ms to 500 ms range, depending on DUT package type and material.

5.2 Thermal measurements. The following sequence of tests and measurements must be made.

a. Prior to the power pulse:

(1) Establish reference point temperature T_{x1}.

(2) Apply measurement voltage V_{CE}.

(3) Apply measurement current I_M.

(4) Measure gate-emitter ON voltage $V_{GE(ON)1}$ (a measurement of the initial junction temperature).

b. Heating pulse parameters:

(1) Apply collector-emitter heating voltage V_H.

(2) Apply collector heating current I_H as required by adjustment of gate-emitter voltage.

(3) Allow heating condition to exist for the required heating pulse duration t_H.

(4) Measure reference point temperature T_{xf} at the end of heating pulse duration.

NOTE : T_x measurements are not required if the t_H value meets the requirements stated in 5.2.

c. Post power pulse measurements:

(1) Apply measurement current I_M.

(2) Apply measurement voltage V_{GE}.

(3) Measure gate-emitter ON voltage $V_{GE(ON)f}$ (a measurement of the final junction temperature).

(4) Time delay between the end of the power pulse and the completion of the $V_{GE(ON)f}$ measurement as defined by the waveform of figure 3103-4 in terms of t_{MD} plus t_{SW}.

d. The value of thermal impedance, $Z_{\theta JX}$, is calculated from the following formula:

$$Z_{\theta JX} = \frac{\Delta T_J}{P_H} = \left| \frac{K\,(V_{GE(ON)f} - V_{GE(ON)i})}{(I_H)\,(V_H)} \right| \quad °C/W$$

This value of thermal impedance will have to be corrected if T_{xf} is greater than T_{x1} by +5°C. The correction consists of subtracting the component of thermal impedance due to the thermal impedance from the reference point (typically the device case) to the cooling medium or heat sink. T_x measurements are not required if the t_H value meets the requirements stated in 5.2.

This thermal impedance component has a value calculated as follows:

$$Z_{\theta X-HS} = \frac{\Delta T_X}{P_H} = \frac{(T_{Xf} - T_{Xi})}{(I_H)\ (V_H)}$$

Where: HS = cooling medium or heat sink (if used).
Then:

$$Z_{\Theta JX}\Big|_{\text{Corrected}} = Z_{\Theta JX}\Big|_{\text{Calculated}} - Z_{\Theta X-HS}$$

NOTE: This last step is not necessary for die attach evaluation (see 4.1).

6. Test conditions and measurements to be specified and recorded.

6.1 K factor calibration.

6.1.1 Test conditions. Specify the following test conditions:

a. I_H current magnitude _____mA
(See detail specification for current value)

b. V_{CE} voltage magnitude _____V
(See detail specification for voltage value)

c. Initial junction temperature _____°C
(Normally +25°C ±5°C)

d. Final junction temperature _____°C
(Normally +lOO°C ±lO°C)

6.1.2 Data. Record the following data:

a. Initial $V_{GE(ON)}$ voltage _____mV

b. Final $V_{GE(ON)}$ voltage _____mV

6.1.3 K factor. Calculate K factor in accordance with the following equation:

$$K = \left| \frac{T_{J1} - T_{J2}}{V_{GE(ON)1} - V_{GE(ON)2}} \right| \ °C/mV$$

6.1.4 For die attachment evacuation, this step may not be necessary (see 4.1).

6.2 Thermal impedance measurements.

6.2.1 Test conditions. Specify the following test conditions:

a. I_M measuring current _____ mA
(Must be same as used for K factor calibration)

b. V_{CE} measuring voltage _____ V
(Must be same as used for K factor calibration)

c. I_H heating current _____ A

d. V_H collector-emitter heating voltage _____ V

e. t_H heating time _____ s

f. t_{MD} measurement time delay _____ µs

g. t_{SW} sample window time _____ µs

(NOTE: I_H and V_H are usually chosen so that P_H is approximately two-thirds of device rated power dissipation.)

6.2.2 Data. Record the following data:

a. T_{X1} initial reference temperature _____ °C

b. T_{Xf} final reference temperature _____ °C

6.2.2.1 $\Delta V_{GE(ON)}$ data:

$\Delta V_{GE(ON)}$ _____ mV

6.2.2.2 $V_{GE(ON)}$ data:

a. $V_{GE(ON)1}$ initial source-drain voltage _____ V

b. $V_{GE(ON)f}$ final source-drain voltage _____ V

T_X measurements are not required if the t_H value meets the requirements stated in 5.2.

6.2.3 Thermal impedance. Calculate thermal impedance using the procedure and equations shown in 5.4.

6.3 $\Delta V_{GE(ON)}$ measurements for screening. These measurements are made for t_H values that meet the intent of 4.1 and the requirements stated in 5.2.

6.3.1 Test conditions. Specify the following test conditions:

a. I_M measuring current _____ mA

b. V_{GE} measuring voltage _____ v

c. I_H heating current _____ A

d. V_H collector-emitter heating voltage _____ v

e. t_H heating time _____ s

f. t_{MD} measurement time delay _____ µs

g. t_{su} sample window time _____ µs

(The values of I_H and V_H are usually chosen equal to or greater than the values used for thermal impedance measurements.)

6.3.2 Specified limits. The following data is compared to the specified limits:

6.3.2.1 $\Delta V_{GE(ON)}$ data:

$\Delta V_{GE(ON)}$ _____ mV

6.3.2.2 $V_{GE(ON)}$ data:

a. $V_{GE(ON)i}$ initial source-drain voltage _____ V

b. $V_{GE(ON)f}$ final source-drain voltage _____ V

Compute $\Delta V_{GE(ON)}$ _____ mV

6.3.2.3 ΔT_J calculation. Optionally calculate ΔT_J if the K factor results produce a ó greater than three percent of the average value of K.

$$\Delta T_J = K(\Delta V_{GE(ON)})\ °C$$

METHOD 3104

THERMAL RESISTANCE MEASUREMENTS OF GaAs MOSFET's (CONSTANT CURRENT FORWARD-BIASED GATE VOLTAGE METHOD)

1. Purpose. The purpose of this test method is to measure the thermal resistance of the MESFET under the specified conditions of applied voltage, current, and pulse width. The temperature sensitivity of the forward voltage drop of the gate-source diode is used as the junction temperature indicator. This method is particularly suitable for completely packaged devices.

2. Definitions. The following symbols and terms shall apply for the purpose of this test method:

a. I_M: Measuring current in the gate-source diode.

b. I_H: Heating current through the drain.

c. V_H: Heating voltage between the drain and source.

d. P_H Magnitude of the heating power pulse applied to DUT in watts; the product of I_H and V_H.

e. t_H: Heating time during which P_H is applied.

f. K: Thermal calibration factor (°C/mV).

g. T_J: Junction temperature in degrees Celsius.

T_{Ji}: Junction temperature in degrees Celsius before start of the power pulse.

T_{Jf}: Junction temperature in degrees Celsius at the end of the power pulse.

h. TX: Reference temperature in degrees Celsius.

T_{xi}: Initial reference temperature in degrees Celsius.

T_{xf}: Final reference temperature in degrees Celsius.

l. V_{GSf}: Forward-biased gate-source junction diode voltage drop in volts.

$V_{GSf(i)}$: Initial gate-source voltage.

$V_{GSf(f)}$: Final gate-source voltage.

j. t_{MD}: The time from the start of heating power (P_H) removal to the completion of the final V_{GSf} measurement.

k. Θ_{JX} Junction-to-reference point thermal resistance in degrees Celsius/watt Θ_{JX} for specified heating power conditions is:

$$\theta_{JX} = \frac{(T_{Jf} - T_{Ji})}{P_H}$$

l. CU: Comparison unit for screening devices against specification Limits. Defined as the change in forward biased gate-source voltage divided by heating current in mV/A.

3. Apparatus. The apparatus required for this test shall include the following as applicable to the specified test procedure.

3.1 Case reference point temperature. The case reference point temperature shall be measured using a thermocouple. The recommended reference point should be located immediately outside the case under the heat source. Thermocouple material shall be copper-constantan (type T) or equivalent. The wire size shall be no larger than AMG size 30. The junction of the thermocouple shall be welded to form a bead rather than soldered or twisted. The accuracy of the thermocouple and associated measuring system shall be ±0.5°C.

3.2 Controlled temperature environment. A controlled temperature environment capable of maintaining the case temperature during the device calibration procedure to within ±1°C over the temperature range of room temperature (approximately +23°C) to +lOO°C.

3.3 K factor calibration setup. A K factor calibration setup, as shown on figure 3104-1, that measures V_{GSf} for a specified value of I_M in an environment that is both temperature controlled and measured. The current source must be capable of supplying I_M with an accuracy of ±1 percent and have a compliance of at least 1 volt and not more than 2 volts. The voltage measurement of V_{GSf} should be made to 1 mV resolution. The device-to-current source wire size shall be sufficient to handle the measurement current (AWG size 26 stranded is typically used for up to 10 mA).

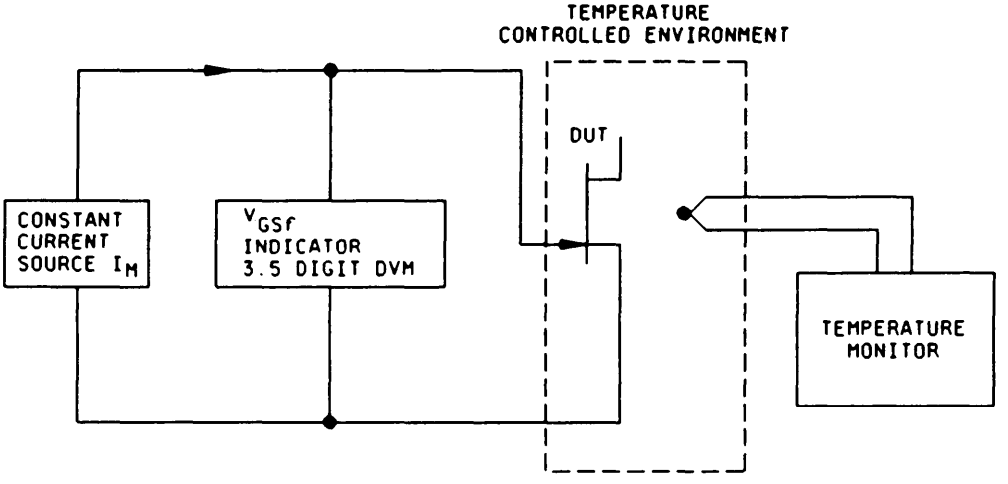

FIGURE 3104-1. K factor calibration setup.

3.4 Controlled temperature heat sink. Controlled temperature heat sink capable of maintaining the specified reference point temperature to within ±5 of the preset (measured) value.

3.5 Test circuit. The circuit used to control the device and to measure the temperature using the forward voltage of the gate-source diode as the temperature sensing parameter is shown on figure 3104-2. Polarities shown are for n-channel devices but the circuit may be used for p-channel types by reversing the polarities of the voltage and current sources.

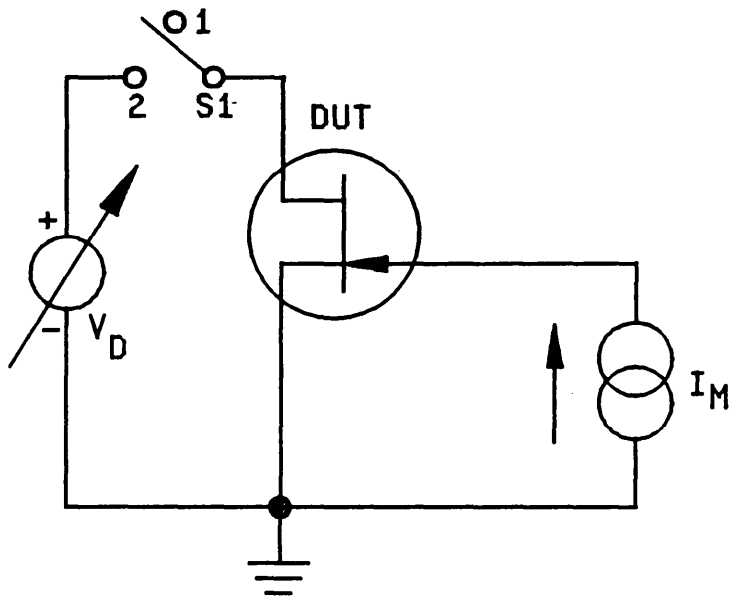

NOTE: The circuit consists of the DUT, one voltage source, one current source, and one electronic - itch. During the heating phase of the measurement, switch S1 is in position 2. The value of V_D is adjusted to achieve the desired values of ID and V_{DS} for the P_H "heating" condition.

FIGURE 3104-2. Thermal resistance measurement circuit (constant current forward-biased gate voltage method).

To measure the initial and post heating pulse junction temperature of the OUT, switch S1 is switched to position 1. This disconnects the V_D source during the measurement time and allows for the measurement of $V_{GSf(i)}$ and $V_{GSf(f)}$ before and after the heating time, respectively. Figure 3104-3 shows the waveforms associated with the three segments of the test.

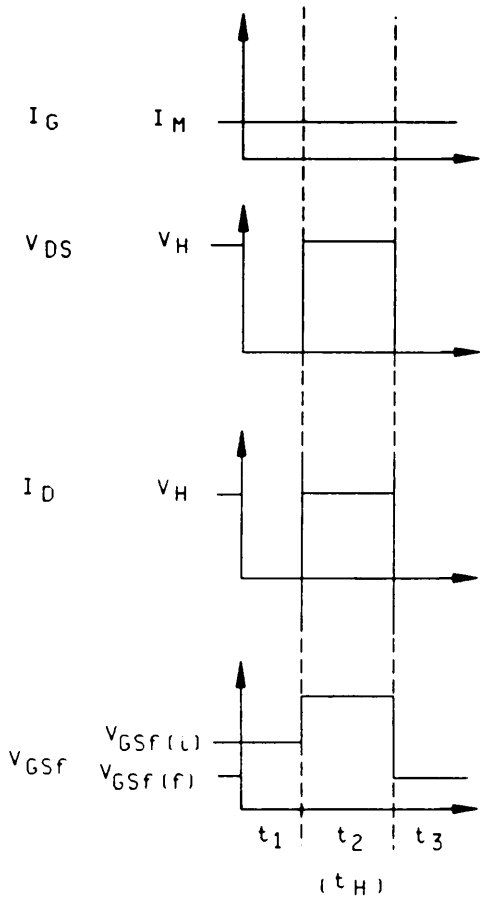

FIGURE 3104-3. Device waveforms during the three segments of the thermal resistance test.

The time required to make the second V_{GSf} reading is critical to the accuracy of the measurement and must be properly specified in order to ensure measurement repeatability. The definition of measurement delay time . (t_{MD}) are described by the waveform on figure 3104-4.

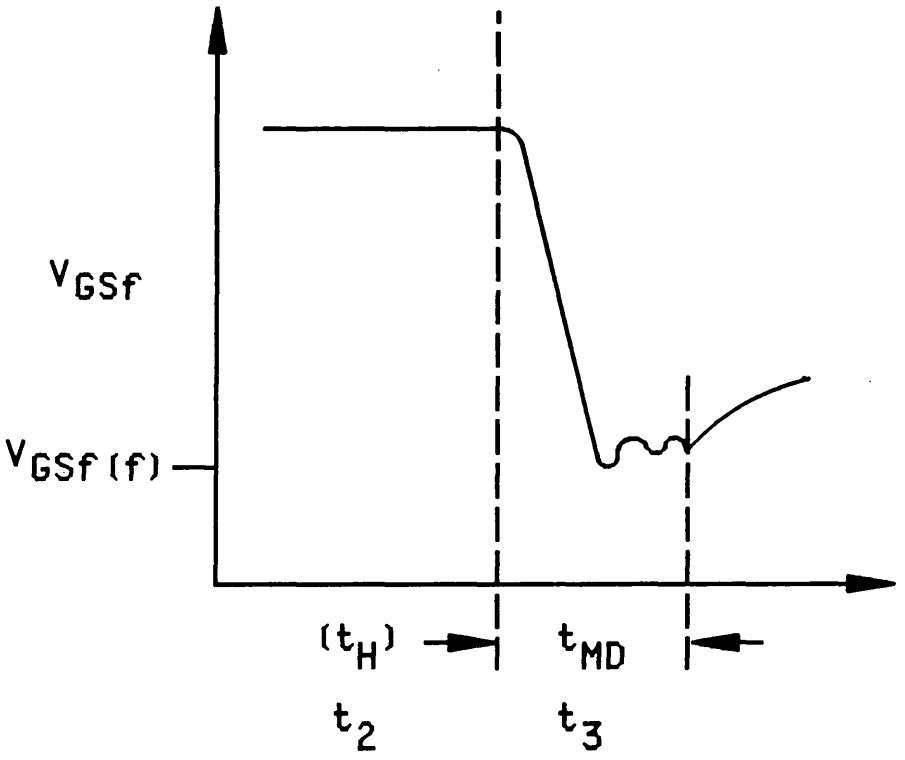

FIGURE 3104-4. Second V_{GSf} measurement waveform.

3.6 Source-drain forward voltage. Suitable sample-and-hold voltmeter or oscilloscope to measure source-drain forward voltage at specified times. V_{GSf} should be measured with 1 mV resolutions.

4. Measurement of the TSP V_{GSf}. The required calibration of V_{GSf} versus T_J is accomplished by monitoring V_{GSf} for the required value of I_M without any connection to the drain as the heat sink temperature (and thus the DUT temperature) is varied by external heating. The magnitude of I_M should be chosen so that V_{GSf} is a linearly decreasing function over the expected T_J range during the power pulse. I_M must be large enough to ensure that the gate-source junction is turned on but not large enough to cause significant self-heating or device destruction. An example calibration curve is shown on figure 3104-5.

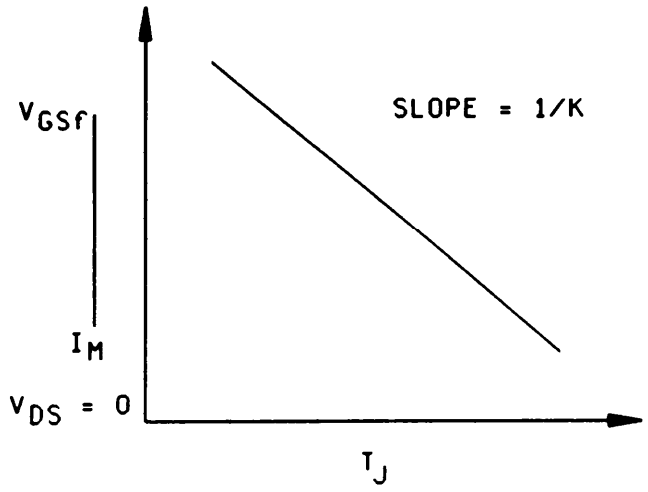

FIGURE 3104-5. Calibration curve.

A calibration factor K (which is the reciprocal of the slope of the curve on figure 3104-5) can be defined as:

$$K = \left| \frac{T_{J1} - T_{J2}}{V_{GSf1} - V_{GSf2}} \right| \ ^{\circ}C/mV$$

It has been found experimentally that the K factor should vary less than several percent for all devices within a given device type class. The usual procedure is to perform a K factor calibration on a 10 to 12 piece sample from a device lot and determine the average K and standard deviation (o). If ó is less than or equal to three percent of the average value of K, then the average value of K can be used for all devices within the lot. If ó is greater than the average value of K, then all the devices in the lot should be calibrated and the individual values of K should be used in thermal resistance calculations.

5. Test procedure.

5.1 Calibration. K factor must be determined according to the procedure outlined in 4.

5.2 Reference point temperature. The reference point is usually chosen to be on the bottom of the transistor case directly below the semiconductor chip. Reference temperature point location must be specified and its temperature should be monitored using the thermocouple mentioned in 3.1 during the preliminary testing. If it is ascertained that T_{xf} increases by more than +5°C during the power pulse, then either the heating power pulse magnitude must be decreased, the DUT must be mounted in a temperature controlled heat sink, or the calculated value of thermal resistance must be corrected to take into account the thermal resistance associated with the temperature rise of the reference point.

5.3 Thermal measurements. The following sequence of tests and measurements must be made:

a. Prior to the power pulse:

(1) Establish reference point temperature: T_{xi}.

(2) Apply measurement current: I_M.

(3) Measure gate-source voltage drop: $V_{GSf(i)}$ (A measurement of the initial junction temperature).

b. Heating pulse parameters:

(1) Maintain measurement current: I_M.

(2) Apply drain-source heating voltage: V_H.

(3) Measure drain heating current: I_H.

(4) Allow heating condition to exist for the required heating pulse width: t_H.

(5) Measure reference point temperature: T_{xf}, at the end of heating pulse width.

c. Post power pulse measurements:

(1) Maintain measurement current: I_M.

(2) Measure gate-source voltage drop: $V_{GSf(f)}$ (A measurement of the final junction temperature).

(3) Determine time delay between the end of the power pulse and the completion of the $V_{GSf(f)}$ measurement as defined by the waveform of figure 3104-4.

5.4 Thermal resistance. The value of thermal resistance, Θ_{JX}, is calculated from the following formula:

$$\theta_{JX} = \frac{\Delta T_J}{P_H} = \frac{K\,|V_{GSF(f)} - V_{GSf(i)}|}{(I_H)\,(V_H)}$$

This value of thermal resistance will have to be corrected if T_{xf} is greater than T_{xi}. The correction consists of subtracting out the component of thermal resistance due to the heat flow path from the reference point (typically the device case) to the heat sink and the environment. This thermal resistance component has a value calculated as follows:

$$\theta_{X-HS} = \frac{\Delta T_X}{P_H} = \frac{(T_{Xf} - T_{Xi})}{(I_H)\,(V_H)}$$

Then:

$$\underbrace{\Theta_{JX}}_{\text{Corrected}} = \underbrace{\Theta_{JX}}_{\text{Calculated}} - \Theta_{X-HS}$$

An additional correction may be required because of the fast cooling of a typical MESFET heat source area. This requires that the thermal resistance measurements be made for two different values of t_{MD}. Care must be taken to ensure that the shorter of the chosen t_{MD} values does not lie within the non-thermal (i.e, electrical) switching transient region. Similarly, if the longer t_{MD} value is too large, the resultant value of Θ_{JX} will be too small for an accurate measurement due to device cooling. The correction for the calculated thermal resistance is given below for test conditions in which I_M, V_H, and t_H remain the same for both tests.

$$\theta_{JX} = \theta_{JX} = \theta_{JX} \Big|_{\text{calculated value}} = \left| \frac{\theta_{JX2} - \theta_{JX1}}{t_{MD1}^{1/2} - t_{MD2}^{1/2}} \right|$$

6. Test conditions and measurements to be specified and recorded.

6.1 K factor calibration.

a. Specify the following test conditions:

(1) I_M current magnitude _____mA
(See detail specification for current value.)

(2) Initial junction temperature _____°C
(Normally +25°C ±5°C.)

(3) Final junction temperature _____°C
(Normally +100°C ±10°C.)

b. Record the following data:

(1) Initial $V_{GSf(i)}$ voltage _____mV

(2) Final $V_{GSf(f)}$ voltage _____mV

c. Calculate K factor in accordance with the following equation:

$$K = \left| \frac{T_{J1} - T_{J2}}{V_{GSf1} - V_{GSf2}} \right| \ °C/mV$$

d. For die attachment evaluation, this step may not be necessary (see 4.1).

6.2 Thermal impedance measurements.

6.2.1 Test conditions. Specify the following test conditons:

a. I_M measuring current _____mA
(Must be same as used for K factor calibration)

b. V_H drain-source heating voltage _____V

c. t_H heating time _____s

d. t_{MD} measurement time delay _____µs

e. t_{SW} sample window time _____µs

(The value of V_H is usually chosen to produce an I_H value that results in a P_H approximately two-thirds of the device rated power dissipation.)

6.2.2 Record data. Record the following data:

a. T_{X1} initial reference temperature _____°C

b. T_{Xf} final reference temperature _____°C

c. I_H current during heating time _____A

6.2.2.1 ΔV_{GSf} data:

ΔV_{GSf} _____mV

6.2.2.2 V_{GSf} data:

a. $V_{GSf(i)}$ initial gate-source voltage _____v

b. $V_{GSf(f)}$ final gate-source voltage _____v

6.2.2.3 Θ_{JX} data:

Θ_{JX}

T_X measurements are not required if the t_H value meets the requirements stated in 5.2.

6.2.3 Thermal impedance calculations. Using the data collected in 6.2.2 and the procedure and equations shown in 5.4, calculate the thermal resistance.

6.3 ΔV_{GSF} measurements for screening. These measurements are made for t_H values that meet the intent of 4.1 and the requirements stated in 5.2.

6.3.1 Test conditions. Specify the following test conditions:

a. I_M measuring current _____mA

b. V_H drain-source heating voltage _____V

c. t_H heating time _____s

d. t_{MD} measurement time delay _____µs

e. t_{SW} sample window time _____µs

(The value of V_H is usually chosen to produce an I_H value that results in a P_H equal to or greater than the values used for thermal impedance measurements.)

6.3.2 Specified limits. Data from one or more of the following is compared to the specified limits:

6.3.2.1 ΔV_{GSf} data:

ΔV_{GSf} _____mV

6.3.2.2 V_{GSF} data:

a. $V_{GSf(i)}$ initial gate-source voltage _____v

b. $V_{GSf(f)}$ final gate-source voltage _____v

Compute ΔV_{SD} _____mV

6.3.2.3 ΔT_J data. Optionally calculate ΔT_J if the K factor results (see 4. and 6.1) produce a ó greater than three percent of the average value of K and if the I_H variation between devices to be compared is relatively small.

$$\Delta T_J = K(\Delta V_{GSf})\ ^\circ C$$

NOTE : The test apparatus may be capable of directly providing a computed value of ΔT_J.

6.3.2.4 CU data. Optionally calculate CU for comparison purposes if the K factor results (see 4. and 6.1) produce a ó less than three percent of the average value of K and if the I_H variation between devices to be compared is relatively large.

CU = comparison unit

$CU = \Delta' V_{GSf}/I_H$ mV/A

NOTE : The test apparatus may be capable of directly providing a computed value of CU.

METHOD 3105

MEASUREMENT METHOD FOR THERMAL RESISTANCE OF A BRIDGE RECTIFIER ASSEMBLY

1. Purpose. This method describes a means to cause current to flow alternately through the legs of a single-phase or three-phase bridge assembly under condition to make it feasible determines its effective thermal resistance. The bridge is operated under steady-state I_0 conditions and the current in each leg is interrupted while readings are taken from which to calculate thermal resistance.

2. Definitions. The following symbols and terminology shall apply for the purposes of this test method:

a. V_F: The forward-biased junction voltage of the DUT used for junction temperature sensing. For a bridge, this applies to individual legs (i.e., one ac to one dc terminal).

b. V_{F1}: The forward voltage at room temperature at I_{ref}.

c. V_{F2}: The forward voltage at I_{ref} and +100°C above that at V_{F1}.

d. V_{F2A}: The computed forward voltage at I_{ref} and at maximum rated T^J.

e. V_{F3}: The initial V_F value at I_{ref} before the application of heating power, with the device at rated case temperature.

f. V_{F4}: The final V_F value at I_{ref} after stabilization of temperatures due to the application of rated current at rated case temperature.

g. ΔV_F: The change in the TSP V_F, due to the application of heating power to the DUT, in volts.

h. V_{FH}: The maximum forward voltage resulting from the application of I_0 to the DUT .

i. I_0: The rated average current applied to the DUT.

j. I_{REF}: The measurement current used to forward-bias the temperature sensing diode junction for measurement of V_F.

k. TCVF: Voltage-temperature coefficient of V_F with respect to T_J at a fixed value Of I_{REF} in V/°C.

1. T_J: The DUT junction temperature.

m. ΔT_J: ‘he change in T_J caused by the application of I..

n. TSP: The temperature-sensitive parameter (V_F).

o. T_N: Reference case temperature for measuring V_N, when N = 1, 2, 3, or 4.

p. t_{F4}: Step trace time.

q. R_{thJX}: Thermal resistance from device junction to a defined reference point (e.g., lead or ambient), in units of °C/W.

r. R_{thJC}: Thermal resistance from device junction to a defined reference point on the outside surface of the case, in units of °C/W.

3. Test circuit. The apparatus required for this test shall include the following, configured as shown on figures 3105-1 and 3105-2.

a. A source of 60 hertz, single or three phase sine wave (AC) capable of being adjusted to the desired value of I_0 and able to supply the V_{FH} value required by the OUT. The current source shouold be able to maintain the desired current to within ±2 percent during the entire time needed for temperature stabilization and measurements.

b. A constant-current source to supply I_{REF} with sufficient compliance voltage range to turn on fully the junction of the diode leg being measured.

c. Anti-parallel fast recovery rectifier diodes with ratings exceeding I., to provide isolation of the high-current source from I_{REF} during commutation of 1_θ between legs.

d. A voltage measurement circuit capable of accurately making the V_F measurements within the available time interval (when the anti-parallel diodes are not conducting), with millivolt resolution.

4. Procedure. Refer to figures 3105-1 and 3105-2, test circuits for single- and three-phase bridges.

a. With S1 open, and DUT at +20°C to +30°C (temperature T_1), read V_{F1} of each leg at current I_{REF}. Elevate the device temperature to +100°C above temperature T_1 (temperature T_2). Allow the device to stabilize until the junction temperature is at 12. Read V_{F2} of each leg at I_{REF} current. Compute the TCVF of each leg as follows:

$$TCVF = (V_{F1} - V_{F2}) / +100°C$$

Compute the expected V_{F2A} at T_J = maximum rated as follows:

$$V_{F2A} = V_{F1} - [(TCVF) \times (T_{JmAx} - T_1)]$$

Determine the average TCVF and the standard deviation of the TCVF from the readings on each leg. If the standard deviation is less than or equal to three percent of the average value of TCVF, TCVF may be used for all devices. If the standard deviation is greater than three percent of the average value of TCVF, then the individual values of TCVF shall be used in determining the performance of the bridge.

b. With the device held at T_3, at or below rated case temperature of I_0, close S1 and read V_{F3} for each leg.

c. After closing S1, adjust the power source, the load resistor, or both to obtain the maximum rated 1_θ (either $1_{\theta1}$ or $1_{\theta2}$, depending on the rated T_c selected) and readjust the case temperature to the chosen rated value. Allow the device to achieve stable junction temperatures (see note 1).

d. Measure V_{F4} (see figure 3105-2) for each leg at the same reference current (±1 percent) as in steps a. and b. (The instrumentation used to measure V_{F4} must have sufficient resolution to read it within 2 mV or 2 percent).

NOTE : If V_{F3} for the leg is greater than V_{F2}, T_J is less than T_{JmAx}.

e. Measure V_{FH} for each leg.

f. Compute thermal resistance as follows:

(1) Compute $\Delta V_F = V_{F4} - V_{F3}$ for each leg.

(2) Compute $\Delta T_J = \frac{\Delta V_F}{TCVF}$ 1/

(3) Compute R_{thJC} Of the full bridge: $R_{thJC} = \frac{\Delta T_{JC}}{I_O \times 2V_{FH}}$

Where: ΔT_J is the average of all legs. V_{FH} is the average of all legs and I_O is the rectified output current of the full bridge. 2/ 3/ 4/

5. Test condition to be specified.

I_O _____

T_C _____

I_{REF} _____

Frequency _____
(if other than 60 Hz)

6. Characteristics to be determined:

Steady state thermal resistance. Unless otherwise specified, juction to care:_____ °C/W.

1/ If, under power, the case is held to T_4, slightly above T_3, a corrected ΔT_J ($T_{J(corr)} = \Delta T_{JC} - (T_4 - T_3)$) should be used for step f(2).
2/ Step f(3) gives R_{th} for the bridge. The average per-leg R_{th} for a single-phase bridge is four times the value; six times for a three-phase bridge (see 3/).
3/ If desired, R_{th} of individual legs may be computed from the individual values of ΔT_{JC} and V_{FH}.
4/ The power dissipated $I_O \times 2V_{FH}$ is a reasonable approximation.

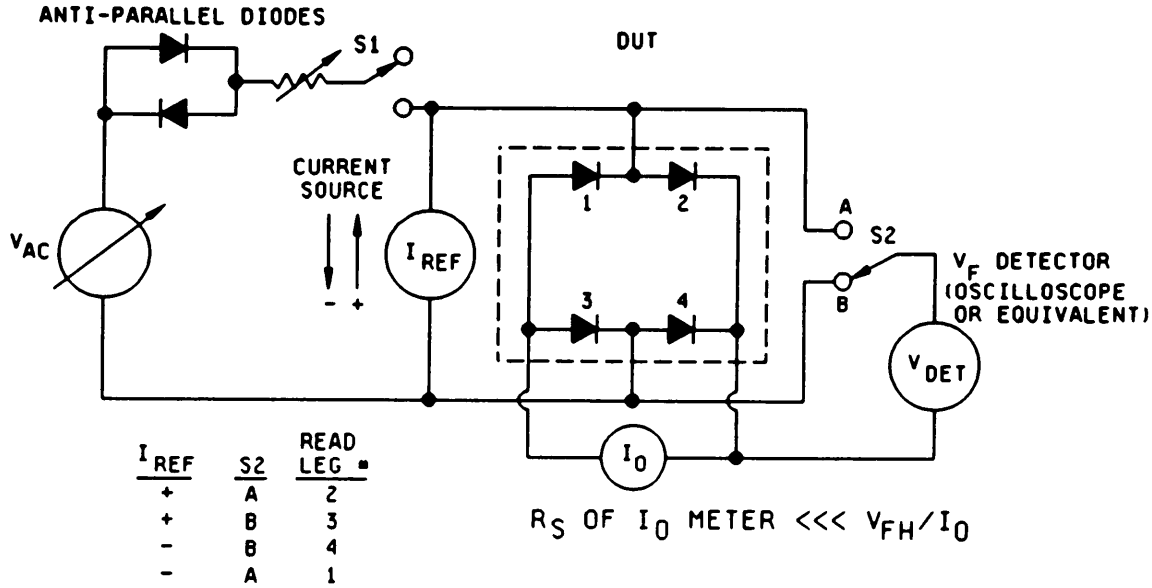

I_{REF}	S2	READ LEG #
+	A	2
+	B	3
-	B	4
-	A	1

NOTES: 1. All voltage measurements shall be made using (cads Kelvin, connected directly to the bridge terminals.

2. V_{AC} is adjusted so that the V_{F4} step (t_{F4}) shown on figure 3105-3 is 100 µ/s ±50 µs and is clearly defined. A typical V_{AC} might be 10 volts peak. Bridges with parasitic inductive components must adjust V_{AC} so that after the inductive ringing settles, the V_{F4} step on figure 3105-3 (t_{F4}) is 100 µs ±50 µs.

FIGURE 3105-1. Single phase bridge.

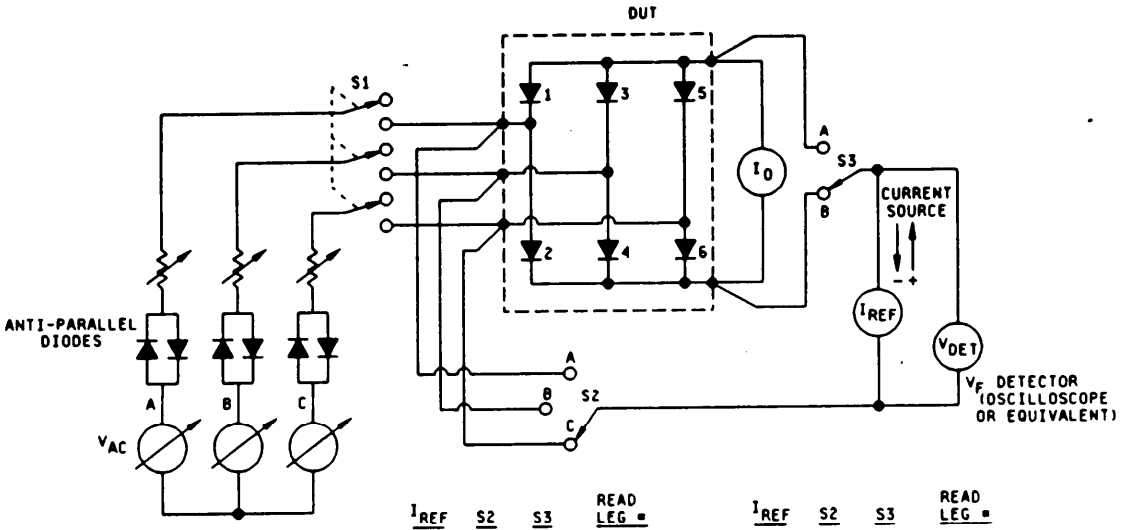

I_{REF}	S2	S3	READ LEG #
+	A	A	1
+	B	A	3
+	C	A	5

I_{REF}	S2	S3	READ LEG #
-	A	B	2
-	B	B	4
-	C	B	6

NOTES: 1. All voltage measurements shall be made using (cads Kelvin, connected directly to the bridge terminals.

2. V_{AC} is adjusted so that the V_{F4} step (t_{F4}) shown on figure 3105-3 is 100 µ/s ±50 µs and is clearly defined. A typical V_{AC} might be 10 volts peak. Bridges with parasitic inductive components must adjust V_{AC} so that after the inductive ringing settles, the V_{F4} step on figure 3105-3 (t_{F4}) is loops ±50 µs.

FIGURE 3105-2. Three phase bridge.

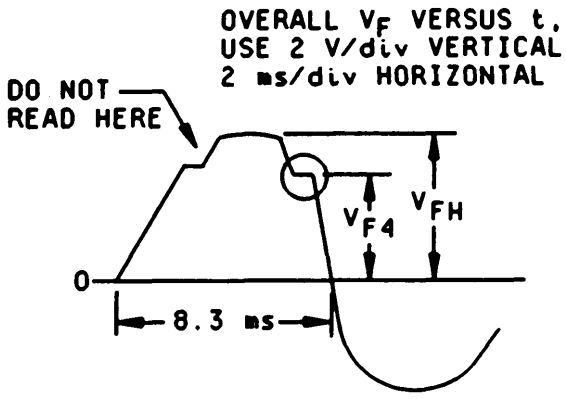

NOTE: V_{F4} "step trace" is provided when anti-parallel diodes in circuit briefly commutate off (the ac current passes through zero during each cooling cycle of individual bridge legs under ac test conditions.)

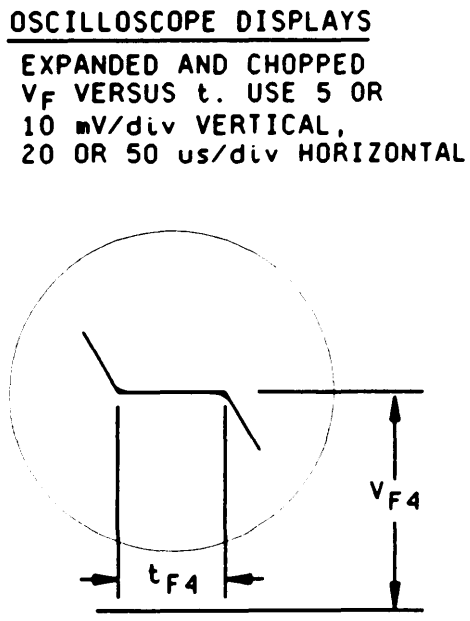

NOTES:

1. Polarity shown applies when I_{REF} is positive. The trace in inverted when I_{REF} is negative.
2. V_{AC} is adjusted so that the V_{F4} step (t_{F4}) shown on figure 3105-3 is 100 µs ±50 µs and is clearly defined. A typical V_{AC} might be 10 volts peak. Bridges with parasitic inductive components must adjust V_{AC} so that after the inductive ringing settles, the V_{F4} step on figure 3105-3 (t_{F4}) is 100 µs ±50 µs.

FIGURE 3105-3. Oscilloscope displays.

METHOD 3126

THERMAL RESISTANCE
(COLLECTOR-CUTOFF-CURRENT METHOD)

1. Purpose. The purpose of this test is to measure the thermal resistance of the device under the specified conditions. This method is particularly applicable to the measurement of germanium devices having relatively large thermal response times.

2. Test circuit. See figure 3126-1.

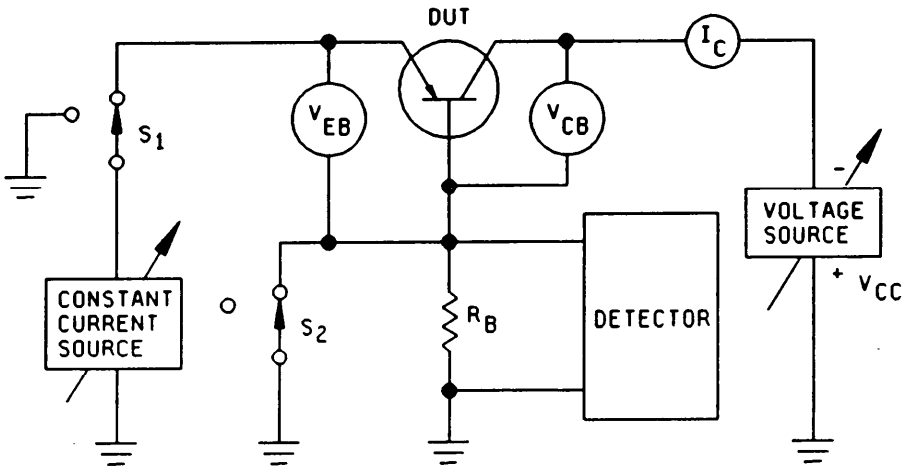

FIGURE 3126-1. Test circuit for thermal resistance (collector-cutoff-current method).

3. Procedure. Switches S1 and S2 are ganged and are operated such that the time they are closed (heat interval) is much larger than the time they are open (measurement interval). S1 is arranged to open slightly before S2 opens, and the interval between the opening of S1 and S2 is adjusted to be short compared to the thermal time constant of the device being measured. The length of the measurement interval should be short compared to the thermal response time of the transistor being measured. When both switches are open, the value of I_{CBO} is read as the drop across R_B. If the I_{CBO} varies during the measurement interval, the value immediately following the opening of S2 should be read. A calibrated oscilloscope makes a convenient detector. Care should be taken that the collector voltage stays constant.

3.1 Measurement interval. The measurement is made in the following manner: The case, ambient, or other reference point is elevated to a high temperature T_2, not exceeding the maximum junction temperature, and the cutoff current, I_{CBO}, read with the constant-current source supplying no current. The reference temperature is then reduced to a lower temperature T_1, and power, P_1, is applied to heat the transistor, by increasing the current from the constant current source, until the same value of I_{CBO} is read as was read above.

$$\text{Then:} \quad \theta = \frac{T_2 - T_1}{P_1}$$

$$\text{Where:} \quad P_1 = (n)\ (I_C V_{CC} + I_E V_{EB})$$

$$n = \text{duty cycle} \left(\frac{t_{on}}{t_{total}} \right)$$

4. Summary. The following conditions shall be specified in the detail specification:

a. Test temperature (see 3.).

b. Test voltages or currents (see 3.).

METHOD 3131.2

THERMAL IMPEDANCE MEASUREMENTS FOR BIPOLAR TRANSISTORS (DELTA BASE-EMITTER VOLTAGE METHOD)

1. Purpose. The purpose of this test method is to measure the thermal impedance of the bipolar transistor under the specified conditions of applied voltage, current, and pulse duration. The temperature sensitivity of the base-emitter voltage is used as the junction temperature indicator. This test method is used to measure the thermal response of the junction to a heating pulse. Specifically, the test may be used to measure dc thermal resistance, and to ensure proper die mountdown to its case. This is accomplished through the appropriate choice of pulse duration and heating power magnitude. The appropriate test conditions and limits are detailed in 6. This method is also applicable for thermal testing of Darlington transistors. The measurement current (I_M) must be large enough to ensure that the Darlington output transistor is biased into the linear conduction mode of the temperature sensing measurement periods of the thermal test.

2. Definitions. The following symbols and terms shall apply for the purpose of this test method:

a. I_M: Emitter current during measurement of the base-emitter voltage with applied collector-emitter voltage.

b. I_H: Heating current through the collector: (I_C during heating).

c. V_H: Heating voltage between the collector and emitter: (V_{CE} during heating).

d. P_H: Magnitude of the heating power pulse applied to DUT in watts; the product of I_H and V_H.

e. t_H Heating time during which P_H is applied.

f. VTC Voltage-temperature-coefficient of V_{BE} with respect to T_J; in mV/°C.

g. K: Thermal calibration factor equal to reciprocal of VTC; in °C/mV.

h. T_J: Junction temperature in degrees Celsius.

T_{Ji}: Junction temperature in degrees Celsius before start of the power pulse.

T_{Jf}: Junction temperature in degrees Celsius at the end of the power pulse.

i. T_X: Reference temperature in degrees Celsius.

T_{xi}: Initial reference temperature in degrees Celsius.

T_{xf} : Final reference temperature in degrees Celsius.

j. V_{BE}: Base-emitter voltage drop in millivolts.

V_{BEi}: Initial base-emitter voltage drop in millivolts.

V_{BEf}: Final base-emitter voltage drop in millivolts.

k. t_{MD}: Measurement delay time is defined as the time from the removal of heating power P_H to the start of the V_{BE} measurement.

l. t_{SW}: Sample window time during which final V_{BE} measurement is made.

m. $Z_{\Theta JX}$: Transient junction-to-reference point thermal impedance in degrees Celsius/watt. $Z_{\Theta JX}$ for specified power pulse duration is:

$$Z_{\theta JX} = \frac{(T_{jf} - T_{ji} - \Delta T_X)}{P_H}$$

Where: ΔT_x = change in reference point temperature during the heating pulse (see 5.2 and 5.4. For short heating pulses (e.g., die attach evaluation), this term is normally negligible.)

n. Θ_{JX}: Equilibrium junction-to-reference point thermal resistance in degrees Celsius/Watt.

3. Apparatus. The apparatus required for this test shall include the following as applicable to the specified test procedure:

a. A thermocouple for measuring the case temperature at a specified reference point. The recommended reference point shall be located on the case under the heat source. Thermocouple material shall be copper-constantan (type T) or equivalent. The wire size shall be no larger than AWG size 30. The junction of the thermocouple shall be welded, rather than soldered or twisted, to form a bead. The accuracy of the thermocouple and its associated measuring system shall be ±0.5°C. Proper mounting of the thermocouple to ensure intimate contact to the reference point is critical for system accuracy.

b. A controlled temperature environment capable of maintaining the case temperature during the device calibration procedure to within ±0.1°C over the temperature range of +23°C to +lOO°C, the recommended temperatures for measuring K factor.

c. The K factor calibration setup, as shown on figure 3131-1, measures V_{BE} for specified values of I_M and V_{CE} (usually the same as V_H) in an environment in which temperature is both controlled and measured. The current source must be capable of supplying I_M with an accuracy of ±2 percent. The value of I_M is usually chosen to be very small compared to I_H so that the device junction and case temperatures are essentially the same. The voltage source must be capable of supplying V_{CE} with an accuracy of *2 percent. The voltage measurement of V_{BE} shall be made with a voltmeter capable of 1 mV resolution. The device-to-current/voltage source wire size shall be sufficient to handle the measurement current (AWG size 22 stranded is typically used for up to 100 mA).

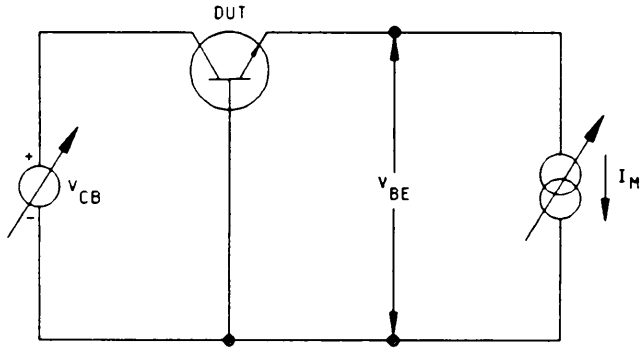

FIGURE 3131-1. K factor calibration setup.

d. A test circuit used to control the device and to measure the temperature using the base-emitter voltage as the temperature sensing parameter as shown on figure 3131-2. Polarities shown are for NPN devices, but the circuit may be used for PNP types by reversing the polarities of the voltage and current sources.

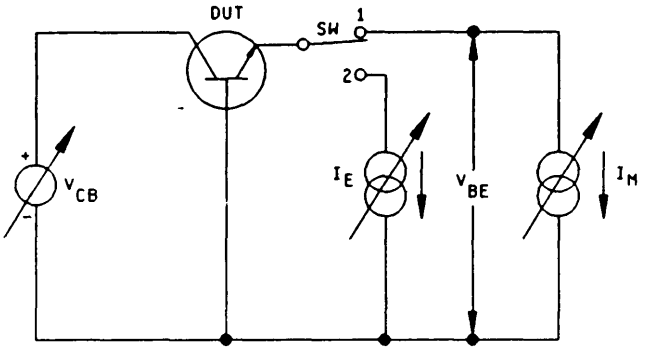

FIGURE 3131-2. Thermal impedance measurement-circuit (base-emitter method).

The circuit consists of the DUT, a voltage source, two current sources, and an electronic switch. During the heating phase of the measurement, switch SW is in position 2. The values of I_E and V_{CB} are adjusted to achieve the desired values of I_C and V_{CB} for the P_H "heating" condition.

To measure the initial and post heating pulse junction temperatures of the DUT, switch SW is switched to position 1. This applies the low-valued emitter current I_M to the device. I_M is chosen not to cause significant self-heating relative to the heating current I_H. If testing for absolute magnitude values of thermal resistance or junction temperature change, the value of I_M must be the same value used in the K factor calibration. Figures 3131-3 and 3131-4 show the waveforms associated with the three segments of the test.

Since I_E is adjusted to provide the desired I_C for heating, the circuit of figure 3131-2 can be modified so that I_M remains on at all times and I_E is switched in and out by SW.

I_M is usually chosen to be 2 percent or less of the XC value. Typically, an I_M value of 10 mA is sufficient for most bipolar transistors for I_C up to 10 A. Darlington transistors having internal base resistors summing to 200 Ω or less typically require values of I_M equal to 25 mA or more.

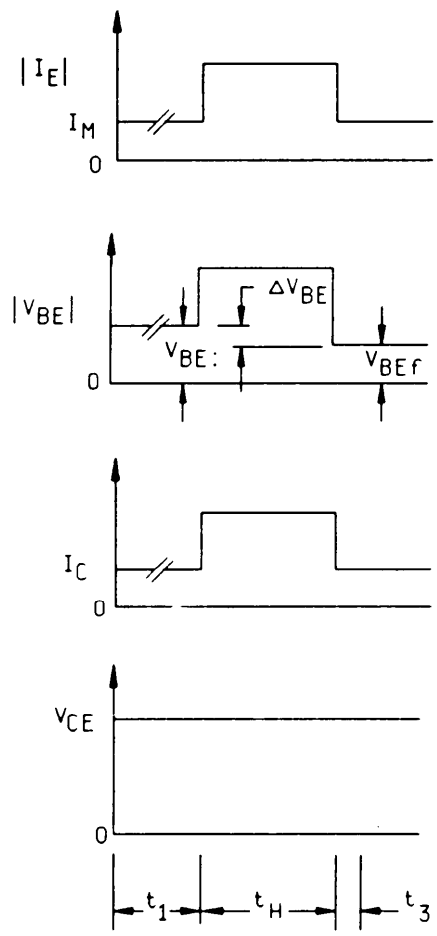

FIGURE 3131-3. Device waveforms during the three segments of the thermal transient test.

The value of t_{MD} is critical to the accuracy of the measurement and must be properly specified in order to ensure measurement repeatability. Note that some test equipment manufacturers include the sample and hold window time t_{SW} within their t_{MD} specification.

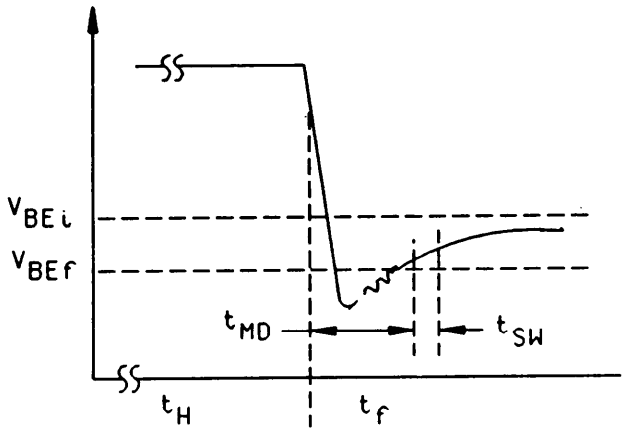

FIGURE 3131-4. Example curve sample and hold window.

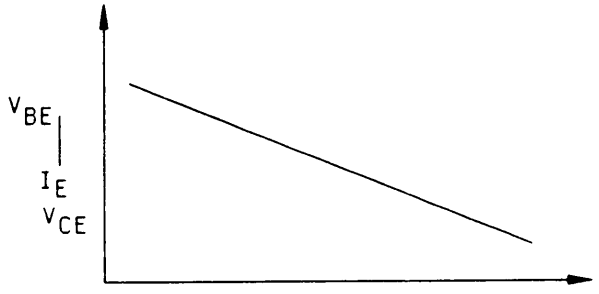

FIGURE 3131-5. Example curve of $V_{GE(ON)}$ versus T_J.

e. Suitable sample-and-hold voltmeter or oscilloscope to measure base to emitter at specified times. V_{BE} shall be measured to within 5 mV, or within 5 percent of (V_{BEi} - V_{BEf}), whichever is less.

4. Measurement of the TSP. The required calibration of V_{BE} versus T_J is accomplished by monitoring V_{BE} for the required values of I_H and V_{CE} as the heat sink temperature (and thus the DUT temperature) is varied by external heating. The magnitudes of I_H end V_{CE} shall be chosen so that V_{BE} is a linearly decreasing function over the expected range of T_J during the power pulse. I_H must be large enough to ensure that the base-emitter junction is turned on but not so large as to cause any significant self-heating. (This will normally be 1 mA for small power devices and up to 100 mA for large ones. Darlington transistors with low-valued internal base resistors will typically require greater than 20 mA in order to make sure the output transistor is turned on.) An example calibration curve is shown on figure 3131-5.

4.1 Die attachment screening. When screening to ensure proper die attachment within a given lot or in a group of the same type number devices of one manufacturer, this calibration step is not required. In such cases, the measure of thermal response may be $\Delta' V_{BE}$ for a short heating pulse, and the computation of ΔT_J or $Z_{\theta JX}$ is not necessary. (For this purpose, t_H shall be 10 ms for TO-39 size packages and 100 ms for TO-3 packages.)

A calibration factor K (which is the reciprocal of VTC or the slope of the curve on figure 3131-4) can be defined as:

$$K = \frac{1}{VTC} = \left| \frac{T_{J1} - T_{J2}}{V_{BE1} - V_{EB2}} \right| \quad °C/mV$$

It has been found experimentally that the K-factor variation for all devices within a given device type class is small. The usual procedure is to perform a K factor calibration on a 10 to 12 piece sample from a device lot and determine the average K and standard deviation (ó). If óK is less than or equal to three percent of the average value of K, then the average value of K can be used for all devices within the lot. If óK is greater than three percent of the average value of K, then all the devices in the lot shall be calibrated and the individual values of K shall be used in thermal impedance calculations or in correcting ΔV_{BE} values for comparison purposes.

5. Test procedure.

5.1 Calibration. K factor must be determined according to the procedure outlined in 4, except as noted in 4.1.

5.2 Reference point temperature. The reference point is usually chosen to be on the bottom of the transistor case directly below the semiconductor chip in a TO-204 metal can or in close proximity to the chip in other styles of packages. Reference temperature point location must be specified and its temperature shall be monitored using the thermocouple mentioned in 3a. during the preliminary testing. If it is ascertained that lx increases by more than five percent of measured junction temperature rise during the power pulse, then either the heating power pulse magnitude must be decreased, the DUT must be mounted in a temperature controlled heat sink, or the calculated value of thermal impedance must be corrected to take into account the thermal impedance of the reference point to the cooling mediun or heat sink.

Temperature measurements for monitoring, controlling, or correcting for reference point temperature changes are not required if the t_H value is low enough to ensure that the heat generated within the DUT has not had time to propagate through the package. Typical values of t_H for this case are in the 10 MS to 500 ms range, depending on DUT package types and material.

5.3 Thermal resistance measurements. This is a thermal impedance measurement for the condition in which the heating time (t_H) has been applied long enough to ensure that the temperature drop from the device junction to the case reference point in accordance with 3a. has reached equilibrium and no longer increases for greater values of t_H. In practical measurements, this condition can be assured to exist when the rate of junction temperature change matches the rate of case temperature change.

5.3.1 Prior to the power pulse:

a. Establish reference point temperature: T_{x1}.

b. Apply measurement current: I_H.

c. Apply measurement voltage: V_{CE}.

d. Measure base-emitter voltage: V_{BE1} (a measurement of the initial junction temperature).

5.3.2 Heating pulse parameters:

a. Apply collector-emitter heating voltage: V_H.

b. Apply collector heating current: I_H.

c. Allow heating condition to exist for the required heating pulse duration: t_H.

d. Measure reference point temperature: T_{xf} (at the end of heating pulse duration).

(NOTE: lx measurements are not required if the t_H value meets the requirements stated in 5.2).

5.3.3 Post power pulse measurements:

a. Apply measurement current I_M.

b. Apply measurement voltage V_{CE}.

c. Measure base-emitter voltage V_{BEf} (A measurement of the final junction temperature).

d. Time delay between the end of the power pulse and the completion of the V_{BEf} measurement as defined by the waveform of figure 3131-4 in terms of $t_{MD} + t_{SW}$.

5.4 Value of thermal impedance. The value of thermal impedance, $Z_{\Theta JX}$, is calculated using the following formula: .

$$Z_{\Theta JX} = \frac{\Delta T_J}{P_H} = \left| \frac{K\,(V_{BEf} - V_{BEi})}{(I_H)\,(V_H)} \right| \quad °C/W$$

Under equilibrium conditions, the thermal resistance Θ_{JX} is calculated using the following formula:

$$\Theta_{JX} = Z_{\Theta JX} \Big|_{equilibrium}$$

This value of thermal impedance will have to be corrected if T_{xf} is greater than T_{x1} by +5°C. The correction consists of subtracting the component of thermal impedance due to the thermal impedance from the reference point (typically the device case) to the cooling medium or heat sink. T_x measurements are not required if the t_H value meets the requirements stated in 5.2 herein.

This thermal impedance component has a value calculated as follows:

$$Z_{OX\text{-}HS} = \frac{\Delta T_X}{P_H} = \frac{(T_{xf} - T_{xi})}{(I_H)(V_H)}$$

Where: HS = cooling medium or heat sink (if used).

Then: $Z_{\Theta JX}\Big|_{Corrected} = Z_{\Theta JX}\Big|_{Calculated} - Z_{\Theta X\text{-}HS}$

NOTE: This last step is not necessary for die attach evaluation (see 4.1).

6. Test conditions and measurements to be specified and recorded.

6.1 K factor calibration.

a. Specify the following test conditions:

(1) I_H current magnitude _____mA
(See detail specification for current value.)

(2) V_{CE} voltage magnitude _____V
(Normally the same as V_H.)

(3) Initial junction temperature _____°C
(Normally +25°C ±5°C.)

(4) Final junction temperature _____°C
(Normally +100°C ±10°C.)

b. Record the following data:

(1) Initial V_{BE} voltage (V_{BE1}) _____mV

(2) Final V_{BE} voltage (V_{BE2}) _____mV

c. Calculate K factor in accordance with the following equation:

$$K = \left| \frac{T_{J1} - T_{J2}}{V_{BE1} - V_{BE2}} \right| \ °C/mV$$

d. For die attachment evaluation, this step may not be necessary (see 4.1).

6.2 Thermal impedance measurements:

6.2.1 Test conditions. Specify the following test conditions:

a. I_M measuring current _____mA
(Must be same as used for K factor calibration.)

b. V_{CE} collector-emitter voltage _____v
(Must be same as used for K factor calibration.)

c. I_H collector heating current _____A

d. V_H collector-emitter heating voltage _____v

e. t_H heating time _____s

f. t_{MD} measurement time delay _____µs

g. t_{SW} sample window time _____µs

(NOTE: I_H and V_H are usually chosen so that P_H is approximately two-thirds of device rated power dissipation or greater.)

6.2.2 Data recording. Record the following data:

a. T_{xi} initial reference temperature _____°C

b. T_{xf} final reference temperature _____°C

6.2.2.1 ΔV_{BE} data:

ΔV_{BE} _____mV

6.2.2.2 V_{BE} data:

a. V_{BEi} initial base-emitter voltage _____v

b. V_{BEf} final base-emitter voltage _____v

T_x measurements are not required if the t_H value meets the requirements stated in 5.2.

6.2.3 Thermal impedance. Calculate thermal impedance using the procedure and equations shown in 5.4.

6.3 ΔV_{BE} measurements for screening. These measurements are made for t_H values that meet the intent of 4.1 and the requirements stated in 5.2.

6.3.1 Test conditions. Specify the following test conditions:

a. I_M measuring current _____mA

b. V_{CE} measuring voltage _____v

c. I_H collector heating current _____A

d. V_H collector-emitter heating voltage _____v

e. t_H heating time _____s

f. t_{MD} measurement time delay _____µs

g. t_{SW} sample window time _____µs

(The values of I_H and V_H are usually chosen equal to or greater than the values used for thermal impedance measurements.)

6.3.2 Specified limits. The following data is compared to the specified limits:

6.3.2.1 ΔV_{BE} data:

ΔV_{BE} _____mV

6.3.2.2 V_{BE} data:

a. V_{BEi} initial base-emitter voltage _____v

b. V_{BEf} final base-emitter voltage _____v

6.3.2.3 Optional calculation. Optionally calculate ΔT_J if the K factor results (see 4. and 6.1) produce a ó greater than three percent of the average value of K.

$$\Delta T_J = K\ (\Delta V_{BE})°C.$$

METHOD 3132

THERMAL RESISTANCE

(DC FORWARD VOLTAGE DROP, EMITTER BASE, CONTINUOUS METHOD)

1. Purpose. The purpose of this test is to measure the thermal resistance of the device under the specified conditions.

2. Test circuit. See figure 3132-1.

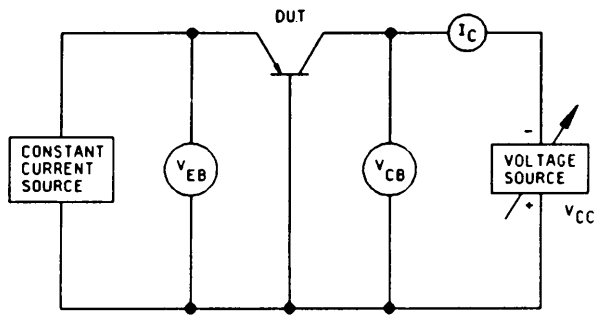

FIGURE 3132-1. Test circuit for thermal resistance (dc forward voltage drop, emitter base, continuous method).

3. Procedure. The measurement technique assumes that the forward emitter voltage drop varies with temperature. It further assumes that during the course of measurement, the variation in forward emitter voltage drop varies monotonically due to temperature and is much greater than that due to the variation with collector voltage.

3.1 Measurement. The measurement is made in the following manner: The case, ambient, or other reference point is elevated to a high temperature T_2, not exceeding the maximum junction temperature. Current I_c is set to a value and a voltage applied to the collector base diode, V_2. The value of V_2 applied shall be low yet high enough so that the device is operating in a normal manner. V_{1EB} is read under these conditions. The reference temperature is reduced to a lower temperature T_1 and V_{cc} varied until the same value of V_{1EB} is read as was read above. The thermal resistance is then

$$\theta = \frac{T_2 - T_1}{I_C\ (V_1 - V_2)}$$

Where: V_1 is the collector voltage applied at temperature T_1.

4. Summary. The following conditions shall be specified in the detail specification:

a. Test temperatures.

b. I_c and V_2.

METHOD 3136

THERMAL RESISTANCE

(FORWARD VOLTAGE DROP, COLLECTOR TO BASE, DIODE METHOD)

1. Purpose. The purpose of this test is to measure the thermal resistance of the device under the specified conditions. This method is particularly applicable to the measurement of germanium and silicon devices having relatively long thermal" response times.

2. Test circuit. See figure 3136-1.

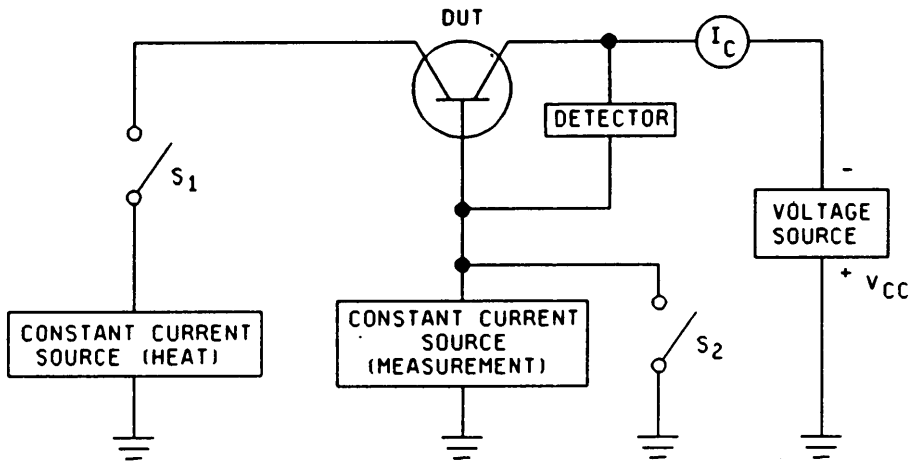

FIGURE 3136-1. Test circuit for thermal resistance (forward voltage drop, collector to base, diode method).

3. Procedure. Switches S1 and S2 are ganged switches and are so arranged that S2 opens very shortly after S1 opens and such that the delay between the openings is much shorter than the thermal response time of the device being measured. S1 and S2 should be closed (heat interval) for a much larger time than they are open (measurement interval) and the measurement interval should be short compared to the thermal response time of the device being measured.

3.1 Measurement. The measurement is made in the following manner: The case, ambient, or other reference point is elevated to a high temperature T_2, not exceeding the maximum junction temperature, and the collector-base voltage, V_{CB}, is read. This reading is made at the beginning of the measurement interval. An oscilloscope makes a convenient detector. The reference temperature is then reduced to a lower temperature, T_1. The heating power, P_1, is adjusted by adjusting the heating current source in the emitter circuit until the same value of V_{CB} is read as was read above. The value of Θ is calculated from the equation

$$\theta = \frac{T_2 - T_1}{P_1}$$

$$\text{Where: } P_1 = (n)\,(I_C\,V_{CC} + I_E\,V_{EB})$$

$$\text{and } n = \text{duty cycle} \left[\frac{t_{on}}{t_{total}}\right]$$

4. Summary. The following conditions shall be specified in the detail specification:

a. Test temperature (see 3.1).

b. Test voltages and currents (see 3.).

METHOD 3141

THERMAL RESPONSE TIME

1. Purpose. The purpose of this test is to measure the time required for the junction to reach 90 percent of the final value of junction temperature change following application of a step function of power dissipation under specified conditions.

2. Apparatus. The apparatus used to determine the thermal response time shall be capable of demonstrating device conformance to the minimum requirements of the individual specification.

3. Procedure. The thermal response time shall be determined by measuring the time required for the junction temperature (as indicated by a precalibrated temperature sensitive electrical parameter) to reach 90 percent of the final value of junction temperature change caused by a step function in power dissipation when the device case or ambient temperature, as specified, is held constant.

4. Summary. The device case or ambient temperature shall be specified in the detail specification:

METHOD 3146.1

THERMAL TIME CONSTANT

1. Purpose. The purpose of this test is to measure the time required for the junction to reach 63.2 percent of the final value of junction temperature change following application of a step function of power dissipation under specified conditions.

2. Apparatus. The apparatus used to determine the thermal time constant shall be capable of demonstrating device conformance to the minimum requirements of the individual specification.

3. Procedure. The thermal time constant shall be determined by measuring the time required for the junction temperature (as indicated by a precalibrated temperature sensitive electrical parameter) to reach 63.2 percent of the final value of junction temperature change caused by a step function in power dissipation, when the device case or ambient temperature, as specified, is held constant.

4. Summary. The device case or ambient temperature shall be specified in the detail specification:

METHOD 3151

THERMAL RESISTANCE, GENERAL

1. Purpose. The purpose of this test is to measure the temperature rise per unit power dissipation of the designated junction above the case of the device or ambient temperature, under conditions of steady state operation.

2. Apparatus. The apparatus used to determine the thermal resistance shall be capable of demonstrating device conformance to the minimum requirements of the individual specification.

3. Procedure. The thermal resistance may be determined by:

a. Measuring the junction power required to maintain the junction temperature constant (as indicated by a precalibrated temperature sensitive l lectrical parameter) when the case of the device or ambient temperature, as specified, is changed by a known amount.

b. Measuring the junction temperature (as indicated by a precalibrated temperature sensitive electrical parameter) when the junction power is changed a known amount while the case of the device or ambient temperature, as specified, is held constant.

4. Summary. The characteristic being measured, $R_{\Theta JC}$ or $R_{\Theta JA}$ shall be specified in the detail specification.

METHOD 3161

THERMAL IMPEDANCE MEASUREMENTS FOR VERTICAL POWER MOSFET's (DELTA SOURCE-DRAIN VOLTAGE METHOD)

1. Purpose. The purpose of this test method is to measure the thermal impedance of the MOSFET under the specified conditions of applied voltage, current, and pulse duration. The temperature sensitivity of the forward voltage of the source-drain diode is used as the junction temperature indicator. This method is particularly suitable to enhancement mode, power MOSFET's having relatively long thermal response times. This test method may be used to measure the thermal response of the junction to a heating pulse, to ensure proper die mountdown to its case, or the dc thermal resistance, by the proper choice of the pulse duration and magnitude of the heating pulse. The appropriate test conditions and limits are detailed in 5.

1.1 Definitions. The following symbols shall apply for the purpose of this test method:

I_M: Current in the source-drain diode during measurement of the source-drain voltage.

I_H: Heating current through the drain.

V_H: Heating voltage between the drain and source.

P_H: Magnitude of the heating power pulse applied to DUT in watts; the product of I_H and V_H.

t_H: Heating time during which P_H is applied.

VTC: Voltage-temperature coefficient of V_{SD} with respect to T_J; in mV/°C.

K: Thermal calibration factor, equal to reciprocal of VTC; in °C/mV.

T_J: Junction temperature in degrees Celsius.

T_{Ji}: Junction temperature in degrees Celsius before start of the power pulse.

T_{Jf}: Junction temperature in degrees Celsius at the end of the power pulse.

T_X: Reference temperature in degrees Celsius.

T_{Xi}: Initial reference temperature in degrees Celsius.

T_{Xf}: Final reference temperature in degrees Celsius.

V_{SD}: Source-drain diode voltage in millivolts.

V_{SDi}: Initial source-drain voltage in millivolts.

V_{SDf}: Final source-drain voltage in millivolts.

t_{MD}: Measurement delay time is defined as the time from the removal of heating power P_H to the start of the V_{SD} measurement.

t_{SW}: Sample window time during which final V_{SD} measurement is made.

$V_{GS(M)}$: Gate-source voltage applied during the initial and final measurement periods.

$Z_{\Theta JX}$: Transient junction-to-reference point thermal impedance in degrees Celsius/watt. $Z_{\Theta JX}$ for specified power pulse duration is:

$$Z_{\theta JX} = \frac{(T_{jf} - T_{ji} - \Delta T_X)}{P_H}$$

Where: ΔT_X = Change in reference point temperature during the heating pulse (see 4.2 and 4.4). For short heating pulses, e.g., die attach evaluation, this term is normally negligible.)

2. Apparatus. The apparatus required for this test shall include the following as applicable to the specified test procedure:

a. A thermocouple for measuring the case temperature at a specified reference point. The recommended reference point shall be located on the case under the heat source. Thermocouple material shall be copper-constantan (type T) or equivalent. The wire size shall be no larger than AWG size 30. The junction of the thermocouple shall be welded to form a bead rather than solderd or twisted. The accuracy of the thermocouple and its associated measuring system shall be ±0.5°C. Proper mounting of the thermocouple to ensure intimate contact to the reference point is critical for system accuracy.

b. A controlled temperature environment capable of maintaining the case temperature during the device calibration procedure to within ±1°C over the temperature range of +23°C to +100°C, the recommended temperatures for measuring K factor.

c. A K factor calibration setup, as shown on figure 3161-1, that measures V_{SD} for a specified value of I_M in an environment in which temperature is both controlled and measured. A temperature controlled, circulating fluid bath may be used. The current source must be capable of supplying I_M with an accuracy of ±1 percent. The voltage source must be capable of supplying a stable $V_{GS(M)}$ in the range of -1 to -5 V (opposite polarity for p-channel devices). This voltage is applied in such a way as to turn the DUT off (i.e., gate negative with respect to source for n-channel device). The voltage measurement of V_{SD} shall be made using kelvin contacts and with voltmeters capable of 1 mV resolution. The device-to-current source wire size shall be sufficient to handle the measurement current (AWG size 22 stranded is typically used for up to 100 mA).

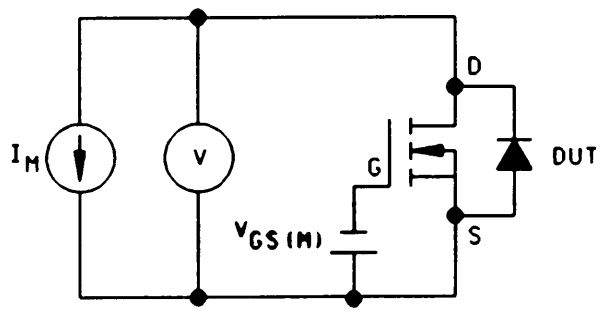

FIGURE 3161-1. K-factor calibration setup.

d. A test circuit used to control the device and to measure the temperature using the forward voltage of the source-drain diode as the temperature sensing parameter as shown on figure 3161-2. Polarities shown are for n-channel devices but the circuit may be used for p-channel types by reversing the polarities of the voltage and current sources.

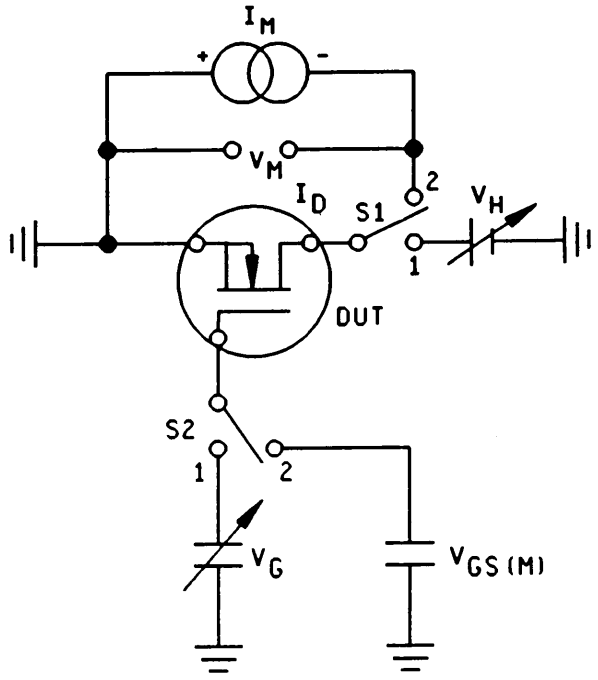

NOTES:

1. The circuit consists of the DUT, three voltage sources, a current source, and two electronic switches. During the heating phase of the measurement, switches S1 and S2 are in position 1. The values of V_G and V_D are adjusted to achieve the desired values of I_D and V_{DS} for the P_H "heating" condition.
2. To measure the initial and post heating pulse junction temperatures of the DUT, switches S1 and S2 are each switched to position 2. This puts the gate at the measurement voltage level $V_{GS(M)}$ and connects the current source I_M to supply forward measurement current to the source-drain diode. The polarity of the current source is such that the voltage applied to the MOSFET source and drain are opposite to those employed during normal MOSFET operation. Figures 3161-3 and 3161-4 show the waveforms associated with the three segments of the test.

FIGURE 3161-2. Thermal impedance measurement circuit (source-drain diode method).

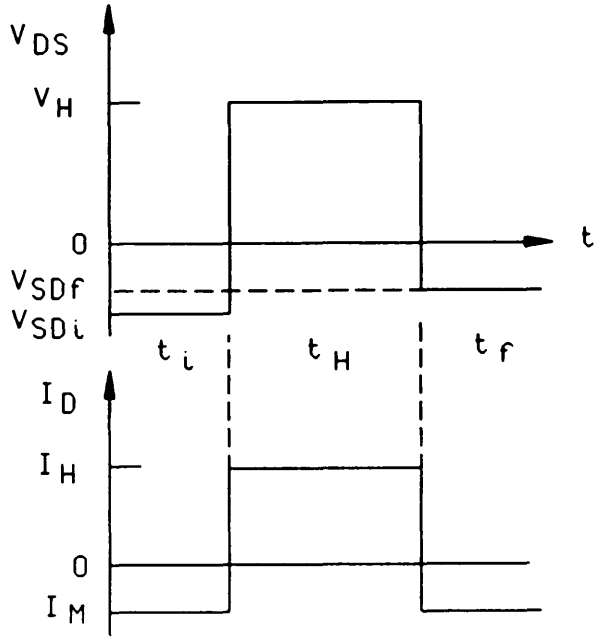

FIGURE 3161-3. Device waveforms during the three segments of the thermal transient test.

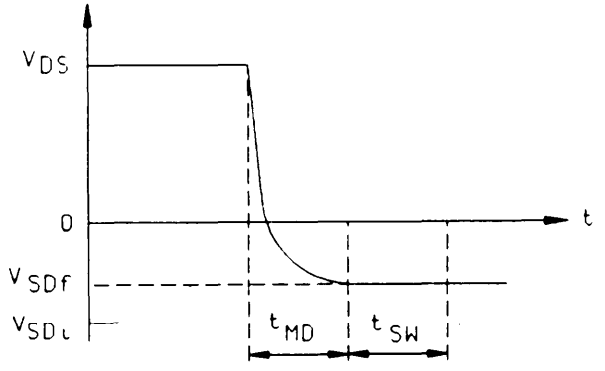

FIGURE 3161-4. Second V_{SD} measurement waveform.

NOTE: The value of t_{MD} is critical to the accuracy of the measurement and must be properly specified in order to ensure measurement repeatability. Note that some test equipment manufacturers include the sample and hold window time t_{SW} within their t_{MD} specification.

e. Suitable sample-and-hold voltmeter or oscilloscope to measure source-drain forward voltage at specified times. V_{SD} shall be measured to within 5 mV, or within 5 percent of (V_{SD1} - V_{SDf}), whichever is less.

3. Measurement of the TSP. The required calibration of V_{SD} versus T_J is accomplished by monitoring V_{SD} for the required value of I_M as the heat sink temperature (and thus the DUT temperature) is varied by external heating. The magnitude of I_M shall be chosen so that V_{SD} is a linearly decreasing function over the expected range of T_J during the power pulse. I_M must be large enough to ensure that the source-drain junction is turned on but not so large as to cause any significant self-heating. (This will normally be 10 mA for small power devices and up to 100 mA for large ones.) The $V_{GS(M)}$ value must be large enough to decouple the gate from controlling the DUT; typical values are in the 1 to 5 V range. An example calibration curve is shown on figure 3161-5.

3.1 Measurement of die attachment integrity. When screening to ensure proper die attachment integrity within a given lot or in a group of same type number devices of one manufacturer, this calibration step is not required. In such cases, the measure of thermal response may be ΔV_{SD} for a short heating pulse, and the computation of ΔT_J or $Z_{\Theta JX}$ is not necessary. (For this purpose, t_M shall be 10 ms for TO-39 size packages and 100 ms for TO-3 packages.)

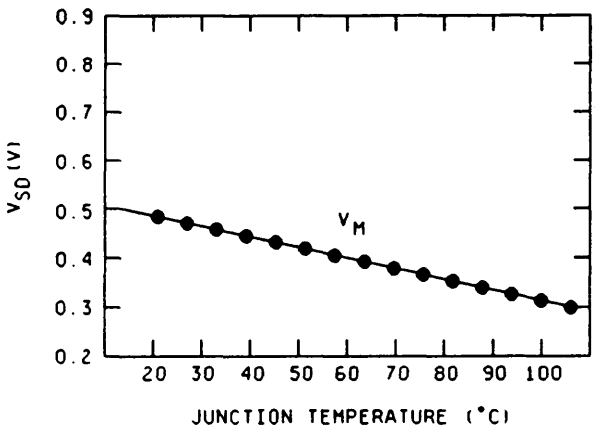

FIGURE 3161-5. Example curve of V_{SD} versus T_J.

3.2 K factor calibration. A K factor calibration (which is the reciprocal of VTC or the slope of the curve on figure 3161-4) can be defined as:

$$K = \frac{1}{VTC} = \left| \frac{T_{J1} - T_{J2}}{V_{SD1} - V_{SD2}} \right| \quad °C/mV$$

It has been found experimentally that the K factor variation for all devices within a given device type class is small. The usual procedure is to perform a K factor calibration on a 10 to 12 piece sample from a device lot and determine the average K and standard deviation (0). If ó is less than or equal to three percent of the average value of K, then the average value of K can be used for all devices within the lot. If ó is greater than three. percent of the average value of K, then all the devices in the lot shall be calibrated and the individual values of K shall be used in thermal impedance calculations or in correcting ΔV_{SD} vales for comparison purposes.

4. Test procedure.

4.1 Calibration. K factor must be determined according to the procedure outlined in 3., except as noted in 3.1.

4.2 Reference point temperature. The reference point is usually chosen to be on the bottom of the transistor case directly below the semiconductor chip in a TO-204 metal can or in close proximity to the chip in other styles of packages. Reference temperature point location must be specified and its temperature shall be monitored using the thermocouple mentioned in 2a. during the preliminary testing. If it is ascertained that T_x increases by more than +5°C of measured junction temperature rise during the power pulse, then either the heating power pulse magnitude must be decreased, the DUT must be mounted in a temperature controlled heat sink, or the calculated value of thermal impedance must be corrected to take into account the thermal impedance of the reference point to the cooling medium or heat sink. Temperature measurements for monitoring, controlling, and correcting for reference point temperature changes are not required if the t_H value is low enough to ensure that the heat generated within the DUT has not had time to propagate through the package. Typical values of t_H for this case are in the 10 ms to 500 ms range, depending on DUT package type and material.

4.3 Thermal measurements. The following sequence of tests and measurements must be made:

a. Prior to the power pulse:

(1) Establish reference point temperature (T_{xi}).

(2) Apply measurement current (I_M).

(3) Apply gate-source measurement voltage ($V_{GS(M)}$).

(4) Measure source-drain voltage drop (V_{SDi}) (a measurement of the initial junction temperature).

b. Heating pulse parameters:

(1) Apply drain-source heating voltage (V_H).

(2) Apply drain heating current (I_H) as required by adjustment of gate-source voltage.

(3) Allow heating condition to exist for the required heating pulse duration (t_H).

(4) Measure reference point temperature (T_{xf}) at the end of heating pulse duration.

(NOTE : T_x measurements are not required if the t_H value meets the requirements stated in 4.2.)

c. Post power pulse measurements:

(1) Apply measurement current (I_M).

(2) Apply gate-source measurement voltage ($V_{GS(M)}$).

(3) Measurement source-drain voltage drop (V_{SDf}) (a measurement of the final junction temperature).

(4) Time delay between the end of the power pulse and the completion of the V_{SDf} measurement as defined by the waveform of figure 3161-4 in terms of $t_{MD} + t_{SW}$.

4.4 Thermal impedance. The value of thermal impedance ($Z_{\Theta JX}$) is calculated from the following formula:

$$Z_{\theta JX} = \frac{\Delta T_J}{P_H} = \left| \frac{K \ (V_{SDf} - V_{SDi})}{(I_H) \ (V_H)} \right| \ °C/W$$

This value of thermal impedance will have to be corrected if T_{xf} is greater than T_{xi} by +5°C. The correction consists of subtracting out the component of thermal impedance due to the thermal impedance from the reference point (typically the device case) to the cooling medium or heat sink. T_x measurements are not required if the t_H value meets the requirements Stated in 4.2. This thermal impedance component has a value calculated as follows:

$$Z_{\theta X-HS} = \frac{\Delta T_X}{P_H} = \frac{(T_{xf} - T_{xi})}{[(I_H)(V_H)]}$$

Where: HS = cooling medium or heat sink (if used).

Then: $Z_{\Theta JX}\Big|_{\text{Corrected}} = Z_{\Theta JX}\Big|_{\text{Calculated}} - Z_{\Theta X-HS}$

Note: This last step is not necessary for die attach evaluation (see 3.1).

5. Test conditions and measurements to be specified and recorded.

5.1 K factor calibration.

5.1.1 Conditions data. Specify the following test conditions:

a. Measuring current (I_M) (see detail specification).

b. Gate-source voltage ($V_{GS(M)}$) (in the range of 0 V to -6 V).

c. initial junction temperature (T_J): +25°C ±5°C.

d. Final junction temperature (T_{Jf}): +100°C ±10°C.

5.1.2 Record data. Record the following data:

a. Initial V_{SD} voltage.

b. Final V_{SD} voltage.

5.1.3 Calculation data. Calculate K factor in accordance with the following equation:

$$K = \left| \frac{T_{J1} - T_{J2}}{V_{SD1} - V_{SD2}} \right| \text{°C/mV}$$

5.1.4 Die attach procedure. K factor calibration (see 5. 1) may not be necessary for die attachment evaluation (see 3.1).

5.2 Thermal impedance measurements.

5.2.1 Conditions data. Specify the following test conditions in the detail specification.

a. Measuring current (I_M) (must be same as used for K factor calibration).

b. Drain heating current (I_H).

c. Heating time (t_H).

d. Drain-source heating voltage (V_H).

e. Measurement time delay (t_{MD}).

f. Sample window time (t_{SW}).

g. Gate-source voltage ($V_{GS(M)}$) (must be same as used for K factor calibration).

(NOTE: I_H and V_H are usually chosen so that P_H is approximately two-thirds of device rated power dissipation).

5.2.2 Record data. Record the following data:

a. Initial reference temperature (T_{xi}).

b. Final reference temperature (T_{xf}).

c. T_x measurements are not required if the t_H value meets the requirements stated in 4.2.

d. Calculate thermal impedance using the procedure and equations shown in 4.4.

5.2.2.1 ΔV_{SD} data. This parameter can either be read directly from suitable test instrumentation or calculated by taking the difference between initial and final values of V_{SD} (i.e., $\Delta V_{SD} = |V_{SD(i)} - V_{SD(f)}|$.)

5.2.3 Thermal resistance measurements, This is a thermal impedance measurement for the condition in which the heating time (t_H) has been applied long enough to ensure that the temperature drop from the device junction to the case reference point in accordance with 2a. has reached equilibrium and no longer increases for greater values of t_H. In practical measurements, this condition can be assumed to exist when the rate of junction temperature change matches the rate of case temperature change.

5.3 Thermal response ΔV_{DS} measurements for screening. These measurements are made for t_H values that meet the intent of 3.1 and the requirements stated in 4.2.

5.3.1 Conditions data. Specify the following test conditions in the detail specification:

a. Measuring current (I_M).

b. Drain heating current (I_H).

c. Heating time (t_H).

d. Drain-source heating voltage (V_H).

e. Measurement time delay (t_{MD}).

f. Sample window time (t_{SW}).

g. Gate-source voltage ($V_{GS(M)}$) (must be the same as used if and when K factor calibration is performed (see 4.3.2.1.)).

(The values of I_H and V_H are usually chosen equal to or greater than the values used for thermal impedance. measurements.)

5.3.2 Specified limits. The following data is compared to the specified limits:

5.3.2.1 ΔV_{SD} data.

a. Same as 5.2.2.1.

b. Optionally calculate ΔT_J for comparison or screening purposes, or both, if the K factor results (see 3. and 51) produce a ó greater than three percent of the average value of K.

$$\Delta T_J = K\ (\Delta V_{SD})\ \text{in}\ ^\circ C$$

6. Summary. The following conditions shall be specified in the detail specification:

6.1 Thermal impedance.

a. I_M measuring current.

b. I_H drain heating current.

c. t_H heating time.

d. V_H drain-source heating voltage.

e. t_{MD} measurement time delay.

f. t_{SW} sample window time.

6.2 Thermal response ΔV_{SD} measurement.

a. I_M measuring current.

b. I_H drain heating current.

c. t_H heating time.

d. V_H drain-source heating voltage. .

e. t_{MD} measurement time delay.

f. t_{SW} sample window time.

METHOD 3181

THERMAL RESISTANCE FOR THYRISTORS

1. Purpose. The purpose of this test is to measure the thermal resistance of thyristors under specified conditions.

2. Test circuit. See figure 3181-1.

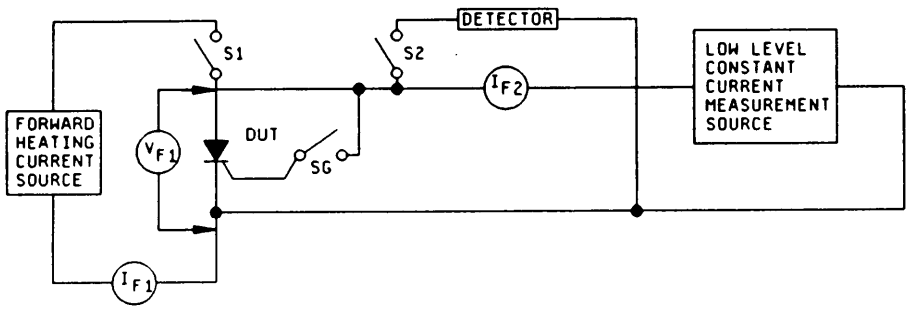

FIGURE 3181-1. Thermal resistance test circuit.

3. Procedure. S1 is closed for a much longer interval (heat) than it is opened (measurement). The measurement interval should be short compared to the thermal response time of the device being measured. The constant measurement current is a small current (of the order of a few milliamperes) and so selected that the magnitude of V_{F1} changes appropriately with the device material (silicon approximately 2 mV/°C) and junction temperature. The heating current source is adjustable.

3.1 Measurement. The measurement is made in the following manner. The case ambient or other reference point is elevated to a high temperature, T_2, not exceeding the maximum junction temperature and the forward voltage drop V_{F1} read with the heating source supplying no current (i.e., the forward voltage V_{F1} is to be read at the start of the measurement interval). An oscilloscope makes a convenient detector. At T_2 there will be a small power dissipated in the device due to the measurement current source. The reference is then reduced to a lower temperature T_1, and power P_1 is applied to heat the device by increasing the current from the constant current source until the same value of V_{F1} is read as was read above. However, if P_1 is calculated as the heating power contributed by the heating current source only the equation:

$$\theta = \frac{T_2 - T_1}{P_1} \text{ gives } \theta \text{ accurately}$$

Where: $P_1 = V_{F1} I_{F1}$

4. Summary. The following conditions shall be specified in the detail specification:

a. Test temperatures (see 3.1).

b. Test voltages and currents (see 3.1).

3200 Series

Low frequency tests

Unless otherwise specified, the measurements shall be made at the electrical test frequency, 1,000 ±25 Hz. At 1,000 Hz, the reactive components may not be negligible.

METHOD 3201.1

SMALL-SIGNAL SHORT-CIRCUIT INPUT IMPEDANCE

1. Purpose. The purpose of this test is to measure the input impedance of the device under the specified conditions.

2. Test circuit. The circuit and procedure shown are for common emitter configuration. For other parameters the circuit and procedure should be changed accordingly.

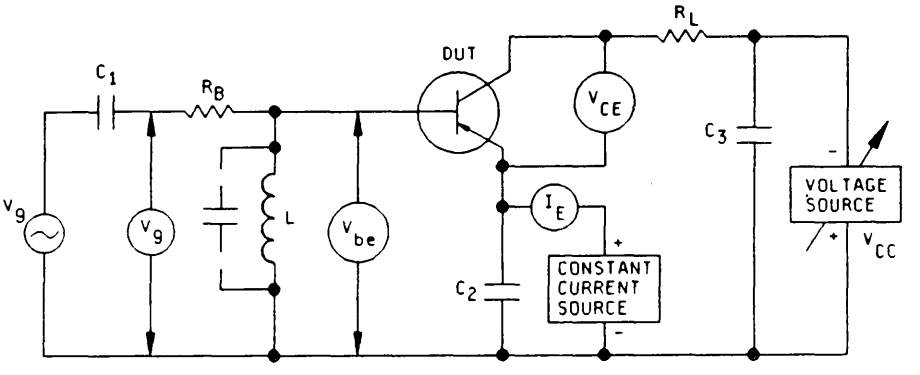

NOTE: The biasing circuit shown is for purposes of illustration only. Other stable biasing circuits may be used (see 4.3.4).

FIGURE 3201-1. Test circuit for small-signal short-circuit input impedance.

3. Procedure. The capacitors C_1, C_2, and C_3 shall present short-circuits at the test frequency in order to effectively couple and bypass the test signal. The inductance L shall be resonated with a capacitor and the combination shall have a large impedance compared with h_{ie} at the test frequency. R_L shall be a short circuit compared with the output impedance of the device. V_g and V_{be} are measured on high-impedance ac voltmeters after setting the specified values of I_E and V_{CE}.

$$\text{Then: } h_{ie} = \frac{V_{be}}{I_b}, \text{ where } I_b = \frac{V_g - V_{be}}{R_B}$$

4. Summary. The following conditions shall be specified in the detail specification:

a. Test frequency (see 3.).

b. Test voltages and currents (see 3.).

c. Parameter to be measured.

METHOD 3206.1

SHALL-SIGNAL SHORT-CIRCUIT FORWARD-CURRENT TRANSFER RATIO

1. Purpose. The purpose of this test is to measure the forward-current transfer ratio of the device under the specified conditions.

2. Test circuit. The circuit and procedure shown are for common emitter configuration. For other parameters the circuit and procedure should be changed accordingly.

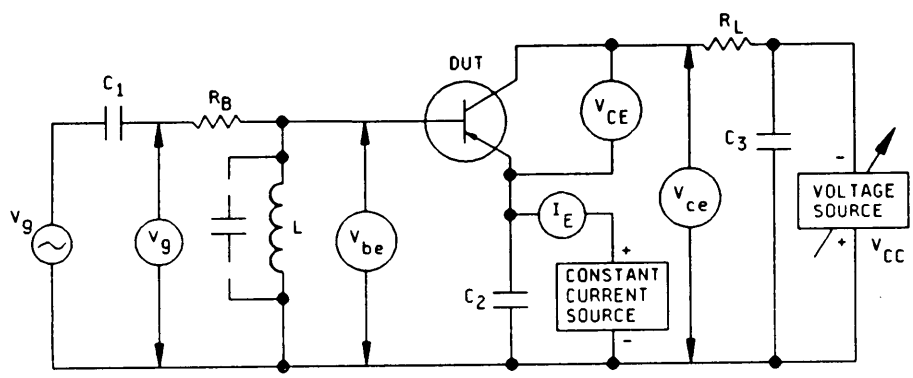

NOTE: The biasing circuit shown is for purposes of illustration only. Other stable biasing circuits may be used (see 4.3.4).

FIGURE 3206-1 Test circuit for small-signal short-circuit forward-current transfer ratio.

3. Procedure. The capacitors C_1, C_2, and C_3 shall present short circuits at the test frequency in order to effectively couple and bypass the test signal. The inductance L shall be resonated with a capacitor and the combination shall have a large impedance compared with h_{ie} at the test frequency. R_L shall be a short circuit compared with the output impedance of the device. V_g, V_{be}, and V_{ce} shall be measured on high-impedance ac voltmeters after setting the specified values of I_E and V_{CE}.

4. Summary. The following conditions shall be specified in the detail spedification:

a. Test frequency (see 3.).

b. Test voltage and currents (see 3.).

c. Parameter to be measured.

METHOD 3211

SMALL-SIGNAL OPEN-CIRCUIT REVERSE-VOLTAGE TRANSFER RATIO

1. Purpose. The purpose of this test is to measure the reverse-voltage transfer ratio of the device under the specified conditions.

2. Test circuit. The circuit and procedures shown are for common emitter configuration. For other parameters the circuit and procedure should be changed accordingly.

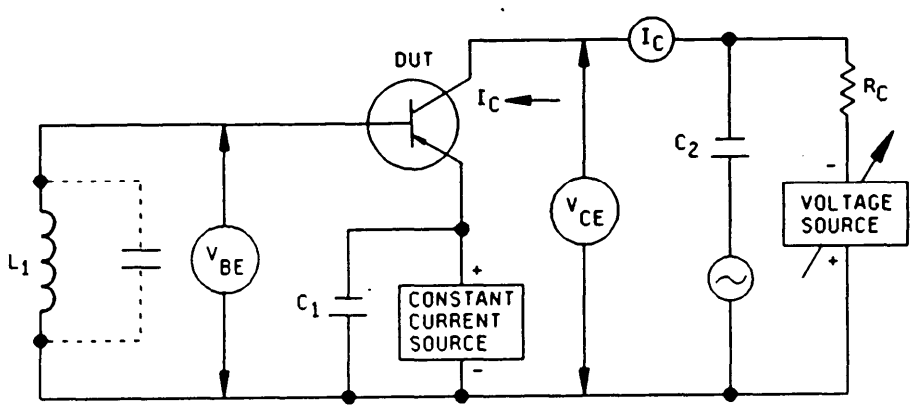

NOTE: The biasing circuit shown is for purposes of illustration only. Other stable biasing circuits may be used (see 4.3.4).

FIGURE 3211-1. Test circuit for small-signal open-circuit reverse-voltage transfer ratio.

3. Procedure. Inductance L_1 shall be resonated with a capacitor and the combination shall have a large impedance compared with h_{ie} at the test frequency. The capacitors C_1 and C_2 shall present short circuits at the test frequency in order to effectively couple and bypass the test signal. Voltmeters V_{be} and V_{ce} shall be high impedance voltmeters. Thus, after applying the specified test voltages and currents:

$$h_{re} = \frac{V_{be}}{V_{ce}}$$

4. Summary. The following conditions shall be specified in the detail specification:

a. Test frequency (see 3.).

b. Test voltages and currents (see 3.).

c. Parameter to be measured.

METHOD 3216

SMALL-SIGNAL OPEN-CIRCUIT OUTPUT ADMITTANCE

1. Purpose. The purpose of this test is to measure the output admittance of the device under the specified conditions.

2. Test circuit. The circuit and procedure shown are for common emitter configuration. For other parameters the circuit and procedure should be changed accordingly.

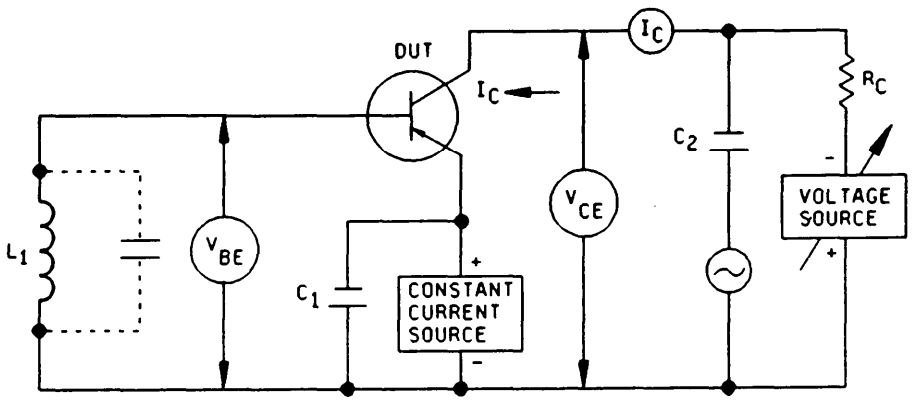

NOTE: The biasing circuit shown is for purposes of illustration only. Other stable biasing circuits may be used (see 4.3.4).

FIGURE 3216-1. Test circuit for small-signal open-circuit output admittance.

3. Procedure. Inductance L_1 shall be resonated with a capacitor and the combination shall have a large impedance compared with h_{ie} at the test frequency. The capacitors C_1 and C_2 shall present short circuits at the test frequency in order to effectively couple and bypass the test signal. Voltmeters V_{be} and V_{ce} shall be high impedance voltmeters. Then:

$$h_{oe} = \frac{I_c}{V_{ce}}$$

4. Summary. The following conditions shall be specified in the detail specification:

a. Test voltages and currents (see 3.).

b. Test frequency (see 3.).

c. Parameter to be measured.

METHOD 3221

SMALL-SIGNAL SHORT-CIRCUIT INPUT ADMITTANCE

1. Purpose. The purpose of this test is to measure the input admittance of the device under the specified conditions.

2. Test circuit. The circuit and procedure shown are for common emitter. For other parameters the circuit and procedure should be changed accordingly.

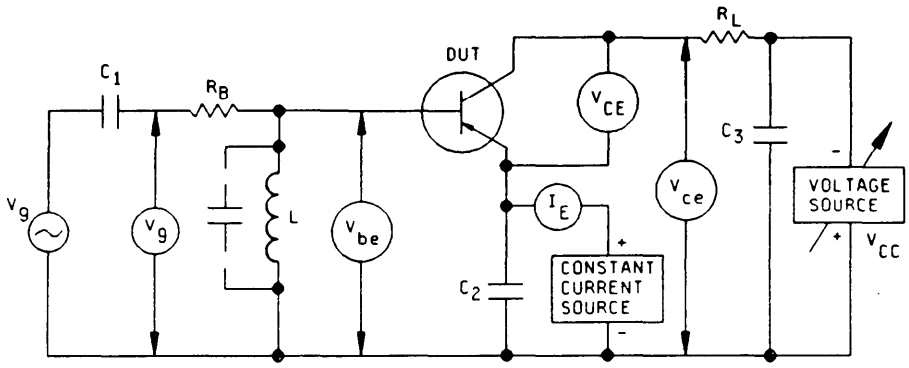

NOTE: The biasing circuit shown is for purposes of illustration only. Other biasing circuits may be used (see 4.3.4).

FIGURE 3221-1. Test circuit for small-signal short-circuit input admittance.

3. Procedure. The capacitors C_1, C_2, and C_3 shall present short circuits at the test frequency in order to effectively couple and bypass the test signal. The inductance L shall be resonated with a capacitor and the combination shall have a large impedance compared with h_{ie} at the test frequency. R_L is optional and shall be a short circuit compared with the output impedance of the device. V_g and V_{be} are measured on high-impedance ac voltmeters.

Then: $h_{ie} = \frac{V_{be}}{I_b}$

Thus: $Y_{ie} = \frac{1}{h_{ie}}$

4. Summary. The following conditions shall be specified in the detail specification:

a. Test frequency (see 3.).

b. Test voltages and currents (see 3.).

c. Parameter to be measured,

METHOD 3231

SHALL-SIGNAL SHORT-CIRCUIT OUTPUT ADMITTANCE

1. Purpose. The purpose of this test is to measure the output admittance of the device under the specified conditions.

2. Test circuit. The circuit and procedure shown are for common emitter configuration. For other parameters the circuit and procedure should be changed accordingly.

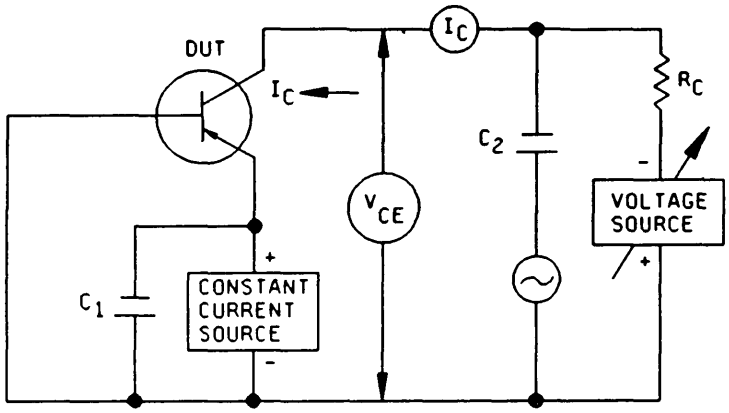

FIGURE 3231-1. Test circuit for small-signal short-circuit output admittance.

3. Procedure. The capacitors C_1 and C_2 shall present short circuits at the test frequency in order to effectively couple and bypass the test signal. Resistor R_c is not zero but chosen for any convenient value.

Then: $$y_{oe} = \frac{I_c}{V_{ce}}$$

4. Summary. The following conditions shall be specified in the detail specification:

a. Test frequency (see 3.).

b. Test voltages or currents.

c. Parameter to be measured.

METHOD 3236

OPEN CIRCUIT OUTPUT CAPACITANCE

1. Purpose. This test is designed to measure the open circuit output capacitance of the device under the specified conditions.

2. Test circuit. The circuit and procedure shown are for common base configuration. For other parameters the circuit and procedure should be changed accordingly.

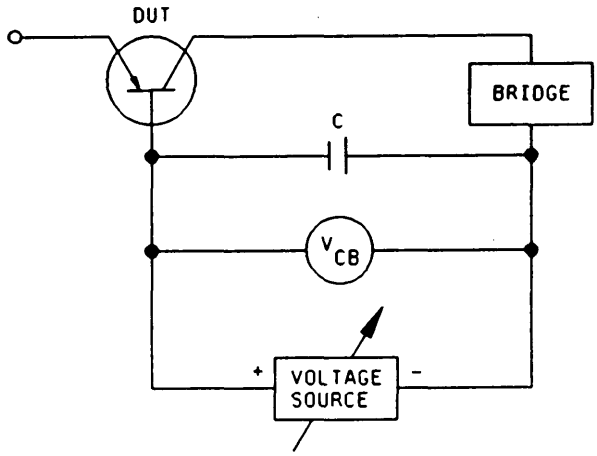

FIGURE 3236-1. Test circuit for open circuit output capacitance.

3. Procedure. The bridge should have low dc resistance between its output terminals and should be capable of carrying the specified collector current without affecting the desired accuracy of measurement. The emitter should be open-circuited to ac and the frequency of measurement shall be as specified. Capacitor C should be sufficiently large to provide a short circuit at the test frequency.

3.1 Measurement. The capacitance reading instrument is nulled with the circuitry connected, thereby eliminating errors due to the stray capacitances of the circuit wiring. The device to be measured is inserted into the test socket, is properly biased, and the output capacitance is measured.

4. Summary. The following conditions shall be specified in the detail specification:

a. Test voltages or currents (see 3.).

b. Measurement frequency (see 3.).

c. Parameter to be measured.

METHOD 3240.1

INPUT CAPACITANCE
(OUTPUT OPEN-CIRCUITED OR SHORT-CIRCUITED)

1. Purpose. The purpose of this test is to measure the shunt capacitance of the input terminals of the device under the specified conditions.

2. Test circuit. See figure 3240-1.

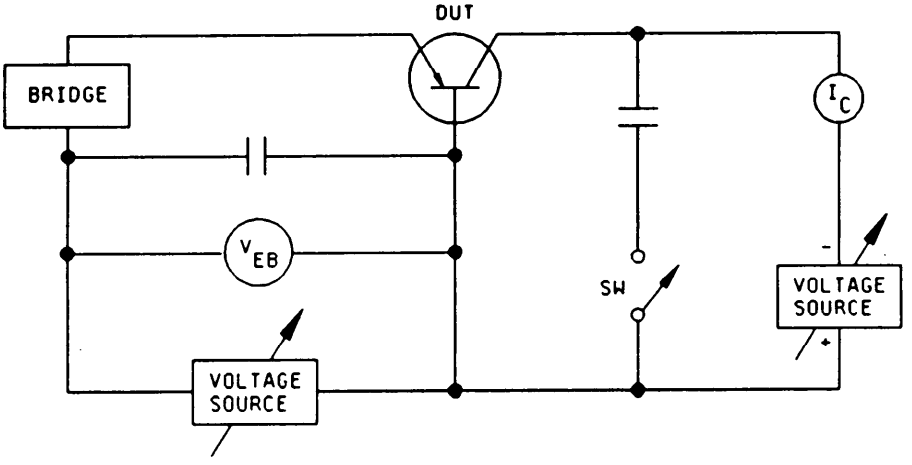

NOTE: For other configurations, the circuit may be modified in such a manner that it is capable of demonstrating device conformance to the minimum requirements of the individual specification.

FIGURE 3240-1. Test circuit for input capacitance (output open-circuited or short-circuited).

3. Procedure. The bridge should have a low dc resistance between the input terminals and should be capable of carrying the required emitter current without effecting the desired accuracy of measurement. The specified voltages or voltage and current shall be applied to the terminals; an ac small signal shall be applied to the input terminals. Switch SW shall be opened or closed depending upon whether the output is intended to be ac open-circuited or ac short-circuited. The input capacitance shall then be measured. The capacitance reading instrument is nulled with the circuitry connected, thereby eliminating errors due to stray capacitances and circuit wiring.

4. Summary. The following conditions shall be specified in the detail specification:

a. Test voltages or currents (see 3.).

b. Test frequency (see 3.).

c. Whether output is to be open-circuited or short-circuited.

METHOD 3241

DIRECT INTERTERMINAL CAPACITANCE

1. Purpose. The purpose of this test is to measure the direct interterminal capacitance between specified terminals using specified electrical biases.

2. Apparatus. A direct capacitance bridge or resonance method may be used to determine the value of the direct interterminal capacitance.

3. Procedure. The direct interterminal capacitance can be determined by using method A or method B.

3.1 Method A. The specified voltage shall be applied between specified terminals: an ac small signal shall be applied to the terminals and the direct interterminal capacitance shall be measured. The lead capacitance beyond .5 inch (12.70 mm) from the body seat shall be effectively eliminated by suitable means such as test socket shielding. The abbreviations and symbols used are defined as follows:

C_{cb}(dir): Collector to base interterminal direct capacitance.

C_{eb}(dir): Emitter to base interterminal direct capacitance.

C_{ce}(dir): Collector to emitter interterminal direct capacitance.

3.2 Method B. A suitable resonance method can be utilized to measure the following two-terminal capacitances:

C_1: Capacitance between collector terminal and ground, with base and emitter terminals grounded.

C_2: Capacitance between the base terminal and ground, with collector and emitter terminals grounded.

C_3: Capacitance between the collector and base terminals strapped together and ground, with the emitter terminal grounded.

The direct interterminal capacitance can then be calculated from the following relationship:

The direct interterminal capacitance for other configurations can be determined by suitable modifications of the above procedure. Such modifications shall be capable of demonstrating device conformance to the minimum requirements of the individual specification.

4. Summary. The following conditions shall be specified in the detail specification:

a. Terminal arrangement.

b. DC biasing conditions.

c. Test voltage or current.

d. Measurement frequency.

METHOD 3246.1

NOISE FIGURE

1. Purpose. The purpose of this test is to measure the noise figure of the device under the specified conditions.

2. Apparatus. An average responding rms calibrated indicator shall be used in addition to other suitable apparatus to measure the noise figure of the diode.

3. Procedure. The voltage and current specified in the individual specification shall be applied to the terminals, and the noise figure shall then be measured at the frequency specified in the individual specification (normally 1,000 Hz) with an input resistance of 1,000 Ω and as referred to a 1 Hz bandwidth.

4. Summary. The following conditions shall be specified in the detail specification:

a. Test voltage or current.

b. Test frequency.

c. Load resistance.

METHOD 3251.1

PULSE RESPONSE

1. Purpose. The purpose of this test is to measure the pulse response (t_d, t_r, t_s, and t_f) of the device under the specified conditions.

2. Test circuit. See figures 3251-1 and 3251-2.

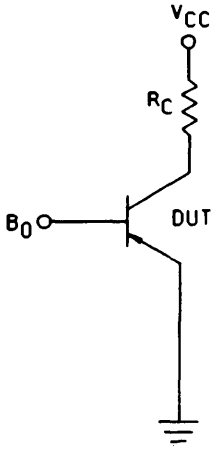

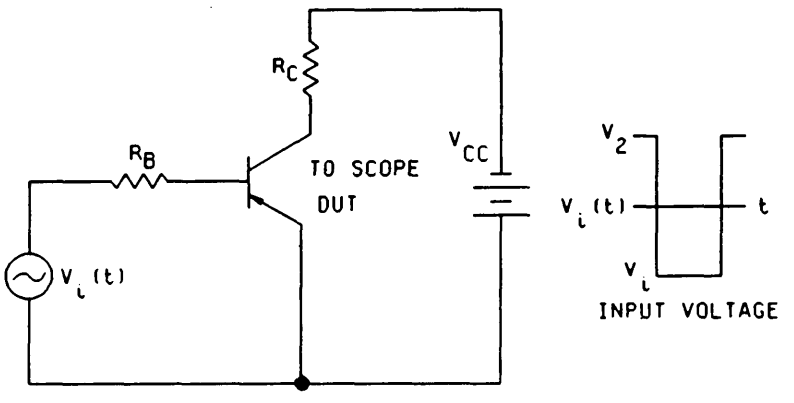

FIGURE 3251-1. Test circuit for pulse response, test condition A.

FIGURE 3251-2. Test circuit for pulse response, test condition B.

3. Procedure. The pulse response of the device shall be measured using test condition A or B.

3.1 Test condition A. The device shall be operated in the common emitter configuration as shown on figure 3251-1 with the collector load resistance (R_c) and collector supply voltage (V_{cc}) specified. When measuring delay or rise time, $I_{B(0)}$ and $I_{B(1)}$ or $V_{BE(1)}$ shall be specified. When measuring storage or fall time, $I_{B(1)}$ or $V_{BE(1)}$ and $1_{B(2)}$ or $V_{BE(2)}$ shall be specified. The input transition and the collector voltage response detector shall have rise and response fall times such that doubling these responses with not affect the results greater than the precision of measurement. The current and voltages specified shall be constant. Stray capacitance of the circuit shall be sufficiently small so that doubting it does not affect the test results greater than the precision of measurement.

$I_{B(0)}$ = prior off state base current.

$I_{BE(0)}$ = prior off state base to emitter voltage.

$I_{B(1)}$ = on state base current.

$I_{BE(1)}$ = on state base to emitter voltage.

$I_{B(2)}$ = post off state base current.

$V_{BE(2)}$ = post off state base to emitter voltage.

3.2 Test condition B. The device shall be operated in the test circuit shown on figure 3251-2 (constant current drive) with the voltages and component values as specified. The pulse or square-wave generator and scope shall have rise and fall response times such that doubling these responses will not affect the results greater than the precision of measurement.

4. Summary. The following conditions shall be specified in the detail specification:

a. Test condition (A or B).

b. Collector load resistance (R_c) and collector supply voltage (V_{cc}) for A.

c. Base resistance (R_B) collector load resistance (R_c), and collector supply voltage (V_{cc}) for B.

d. Test voltages or currents (see 3.).

METHOD 3255

LARGE SIGNAL POWER GAIN

1. Purpose. The purpose of this test is to measure the ratio of ac output power to the ac input power (usually specified in dB) under specified large signal conditions.

2. Test circuit. The test circuit shall be as specified in the detail spedification.

3. Procedure. The procedure shall be as specified in the detail specification.

4. Summary. The following conditions shall be specified in the detail specification.

   a. Test voltages and currents.

   b. Test frequency (if other than 1,000 Hz).

   c. Test circuit.

METHOD 3256

SHALL SIGNAL POWER GAIN

1. Purpose. The purpose of this test is to measure the ratio of the ac output power to the ac input power under the specified conditions (usually specified in dB) for small signal power gain.

2. Test circuit. See figure 3256-1.

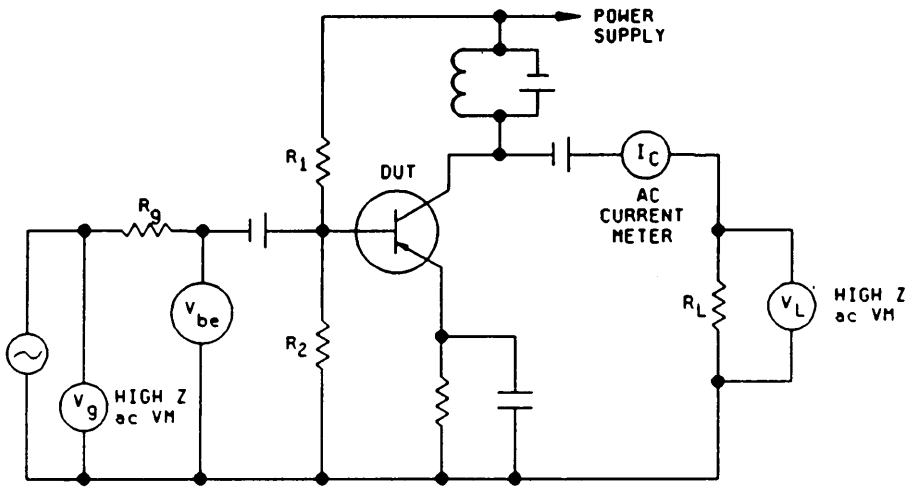

NOTE: For other configurations,. the circuit should be modified in such a manner that the circuit is capable of demonstrating device conformance to the individual specification.

FIGURE 3256-1. Test circuit for small-signal power gain.

3. Procedure. The specified voltage(s) and current(s) should be applied to the terminals; an ac small signal should be applied to the input terminals of the specified circuit. The resistors R_1 and R_2 should have values larger than the h_{ie} of the device. The phase angle Θ between the input current and V_{be} shall be considered to be 0, if the specified test frequency is less than the extrapolated unity gain frequency (f_t) of the device.

Then, for common emitter:

$$P_{ge} = 10 \log \frac{P_{out}}{P_{in}}$$

Where, $P_{in} = (V_{be})\ (i_b) \cos$

$$i_b = \frac{V_g - V_{be}}{R_g}$$

$$P_{out} = (i_c)^2(R_L) \text{ or } \frac{(V_L{}^2)}{R_L}$$

$$\text{Thus, } P_{ge} = 10 \log \frac{(i_c)^2 (R_L)}{(V_{be}) \left(\frac{V_g - V_{be}}{R_g} \right)} \text{ or}$$

$$10 \log \frac{\frac{V_L{}^2}{R_L}}{V_{be} \left(\frac{V_g - V_{be}}{R_g} \right)}$$

For other configurations, modifications to the procedure should be made in such a manner that it is capable of demonstrating device conformance to the individual specification.

4. Summary. The following conditions shall be specified in the detail specification:

a. Test circuit.

b. Test voltage(s) and current(s).

c. Test frequency (if other than 1,000 Hz).

METHOD 3261.1

EXTRAPOLATED UNITY GAIN FREQUENCY

1. Purpose. The purpose of this test is to determine the extrapolated unity gain frequency (gain band width product) of the device under the specified conditions.

2. Test circuit. The test circuit employed in determining the extrapolated unity gain frequency shall be that which is used for measuring the magnitude of the common emitter small-signal short-circuit current transfer ratio. (See method 3306.)

3. Procedure. The magnitude of the common emitter short-circuit current transfer ratio shall be determined at the specified frequency with the specified bias voltages and currents applied. The product of the specified signal frequency (f) and the measured common emitter small-signal short-circuit current transfer ratio (h_{fe}) is the extrapolated unity gain frequency (f_t).

4. Summary. The following conditions shall be specified in the detail specification:

   a. Test current and voltage.

   b. Test frequency.

METHOD 3266

REAL PART OF SMALL-SIGNAL SHORT-CIRCUIT INPUT IMPEDANCE

1. Purpose. The purpose of this test is to measure the resistive component of the small signal short-circuit input impedance of the device under the specified conditions.

2. Test circuit. See figure 3266-1.

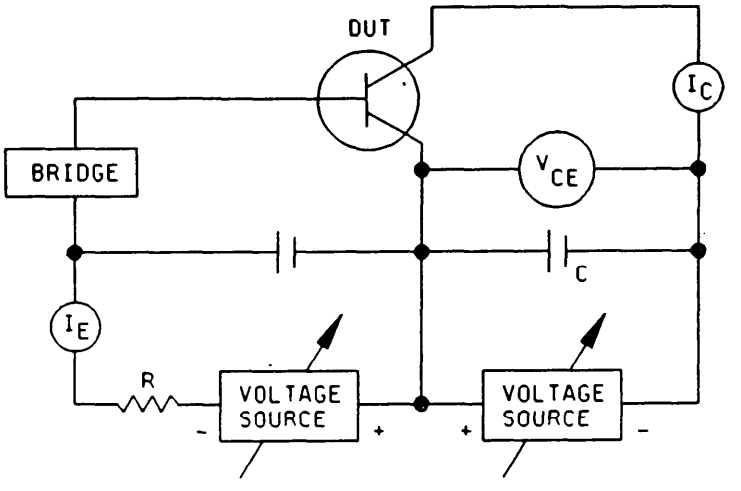

NOTE: The circuit shown is used for measuring the common emitter real part of the small-signal short-circuit input impedance. For other device configurations, the above circuitry should be modified in such a manner that it is capable of demonstrating device conformance to the minimum requirements of the individual specification.

FIGURE 3166-1. Test circuit for real part of small-signal short-circuit input impedance.

3. Procedure. The voltage and current specified shall be applied to the terminals. An ac small signal of the frequency specified shall be applied to the input terminals and the output terminals shall be ac short-circuited. The real part of the input impedance shall then be measured.

4. Summary. The following conditions shall be specified in the detail specification:

a. Test voltage and current.

b. Test frequency.

3300 Series

High frequency tests

Care shall be taken that, in designing the circuit and transistor mounting, adequate shielding and decoupling are provided and that series inductances in circuits are negligible.

METHOD 3301

SMALL-SIGNAL SHORT-CIRCUIT FORWARD-CURRENT TRANSFER-RATIO CUTOFF FREQUENCY

1. Purpose. The purpose of this test is to measure the forward-current transfer-ratio cutoff frequency under the specified conditions.

2. Test circuit. The circuit and procedure shown are for common base configuration. For other parameters the circuit and procedure should be changed accordingly.

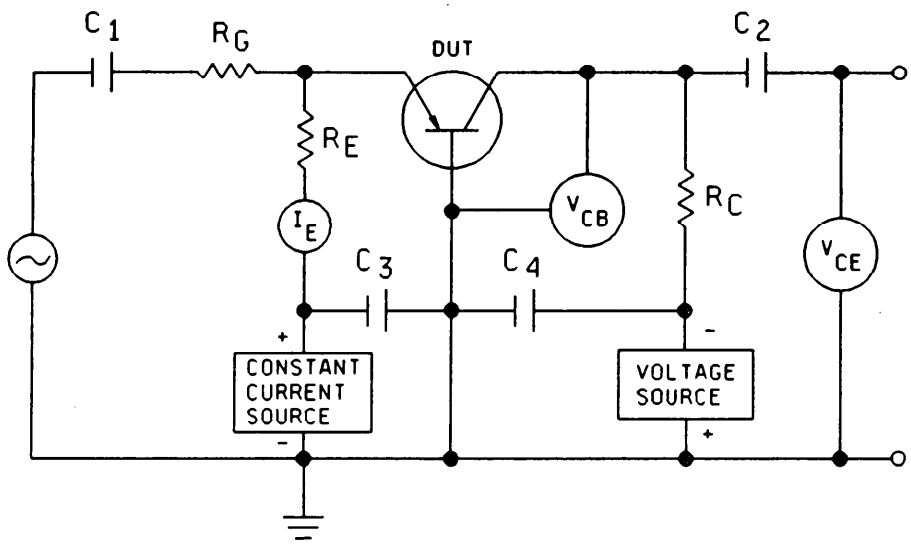

NOTE: Normal VHF circuit precautions should be taken. At frequencies higher than 10 MHz, the use of this circuit may lead to excessive errors. The biasing circuit shown is for the purposes of illustration only and any stable biasing circuit may be used.

FIGURE 3301-1. Test circuit for small-signal short-circuit forward-current transfer-ratio cutoff frequency.

3. Procedure. The voltages and currents shall be as specified. Resistors R_G and R_E shall be large to present open circuits to h_{ib}. Resistor R_C shall be small to present a short circuit to bob. Capacitors C_1, C_2, C_3, and C_4 shall present short circuits at the test frequency to effectively couple and bypass the test signal.

a. The circuitry shall be frequency independent. This can be checked by removing the device from the circuit and shorting between emitter and collector with no bias voltages applied. Care should be taken to ensure that the generator has a sufficiently pure waveform and that the high-impedance voltmeter is adequately sensitive to enable the measurement to be made at a low enough signal level to avoid the introduction of harmonics by the device.

b. The generator is set to a frequency at least 30 times lower than the lowest cutoff frequency limit and the low frequency h_{fb} is measured. The frequency is then increased until the magnitude of h_{fb} has fallen to $1/\sqrt{2}$ of its low frequency value. This is the cutoff frequency.

4. Summary. The following conditions shall be spedified in the detail specifications:

a. Test voltages and currents (see 3.).

b. Parameter to be measured.

METHOD 3306.3

SMALL-SIGNAL SHORT-CIRCUIT FORWARD-CURRENT TRANSFER RATIO

1. Purpose. The purpose of this test is to measure the forward-current transfer ratio under the specified conditions.

2. Test circuit. The circuit (see figure 3306-1) and procedure shown are for common emitter configuration. For other parameters the circuit and procedure should be changed accordingly.

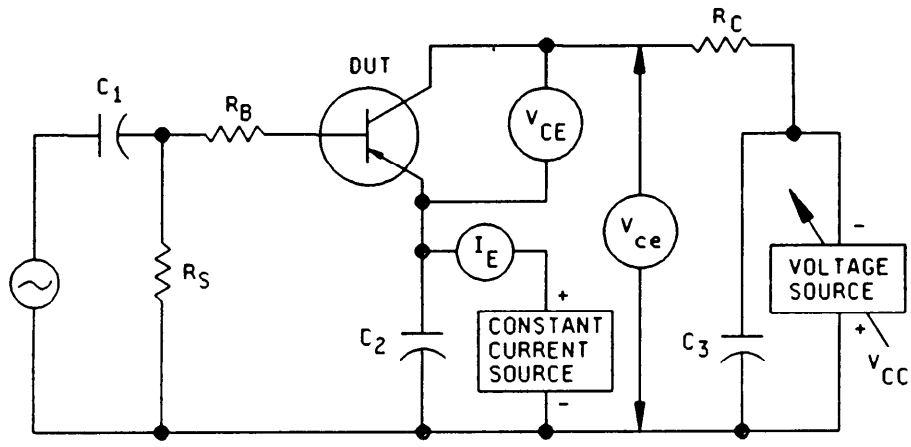

NOTE: The biasing circuit shown is for purpose of illustration only. Other stable biasing circuits may be used (see 4.3.4).

FIGURE 3306-1. Test circuit for small-signal short-circuit forward-current transfer ratio.

3. Procedure. Capacitors C_1, C_2, and C_3 shall present short circuits in order to effectively couple and bypass the test signal at the frequency of measurement. The value of R_B shall be sufficiently large to provide a constant current source. Resistor R_C shall be a short circuit compared to the output impedance of the device. With the device removed from the circuit, a shorting link is placed between the base and collector and the output voltage of the signal generator is adjusted until a reading of one (in arbitrary units) is obtained on the high-impedance ac voltmeter, V_{CE}. With the device in the circuit and biased as specified, the reading on voltmeter V_{CE} is now equal to the magnitude of (h_{fe}). (NOTE: Care must be taken to assure that the output signal is not clipped.)

4. Summary. The following conditions shallbe specified in the detail specification:

a. Measurement frequency (see 3.).

b. Test voltages and currents (see 3.1),

c. Parameter to be measured.

METHOD 3311

MAXIMUM FREQUENCY OF OSCILLATION

1. Purpose. The purpose of this test is to measure the maximum frequency of oscillation for the device under the specified conditions.

2. Test circuit. The circuit utilized for the maximum frequency of oscillation test shall be as specified in the detail specification.

3. Procedure. The voltage(s) and current(s) specified shall be applied to the device in the circuit specified, and the circuit resonant frequency shall be increased until oscillation ceases. The frequency at which oscillation ceases is the maximum frequency of oscillation.

4. Summary. The following conditions shall be specified in the detail specification:

   a. Test circuit.

   b. Test voltage(s) and current(s).

METHOD 3320

RF POWER OUTPUT, RF POWER GAIN, AND COLLECTOR EFFICIENCY

TEST CONDITION A

1. Purpose. The purpose of this test is to measure the RF power output, RF power gain, and collector efficiency of a transistor under actual operating conditions in a specific RF amplifier test circuit. Test condition A shall be valid for devices operating at RF power levels greater than 10 dBm when tested in the frequency range between 10 MHz and 2 GHz.

2 Apparatus. All referenced equipments may be replaced by equivalents suitable for the frequency of test. The equipment set up shall be as shown on figures 3320-1 and 3320-2.

3. Procedure. The test fixture shall be disconnected and directional couplers number 1 and number 2 shall be directly connected using a minimum number of connectors. The RF switch shall be set to the output position 'C' and the frequency and RF power source adjusted to the specific conditions by monitoring the frequency counter and RF power meter respectively. The RF switch shall be set to position 'A' and the variable attenuator adjusted to obtain the identical reading as power out in position 'C'. The test fixture shall be reconnected with the DUT inserted and the dc power supply adjusted to the specified voltage. The " circuit output tuning shall be adjusted for maximum power gain and circuit input tuning for minimum reflected power. (The RF switch shall be alternated between power in, reflected power, and power out while tuning and this procedure shall be repeated as many times as necessary to obtain minimum reflected power and maximum power out.) The power in level shall be checked before taking the final measurement. If input reflected power calibration is required, the above procedure shall be repeated with directional coupler number 1 reversed and switch position 'A' changed to switch position 'B'.

NOTE: Minimum reflected power is defined as minimum reading obtained with switch in position 'B' and maintaining power in.

3.1 Measurements.

3.1.1 Power output. Power output (Pout) is measured by adjusting the RF power source to obtain the specified forward input power and reading the output power in watts.

3.1.2 Power input. Power input (Pin) is measured by adjusting the RF power source to obtain the specified forward output power and reading the input power in watts.

3.1.3 Power gain. Power gain (G_p) is measured by adjusting the RF power source to the value of P_{in} which produces the specified Pout. P_{in} and Pout shall be observed and the gain (in dB) determined as follows:

$$G_p = 10 \log \frac{P_{out}}{P_{in}}$$

3.1.4 Collector efficiency. Collector efficiency (η) is measured by adjusting the RF source to the specified P_{in} (or Pout) and reading Pout. The collector efficiency shall be computed as follows:

$$\eta\ (\%) = \frac{P_{out}\ (W)}{P_{in}\ (W)} \times 100 = \frac{P_{out}\ (W)}{I_C \times V_{CC}} \times 100$$

Where: I_c = collector current

V_{cc} = collector supply voltage

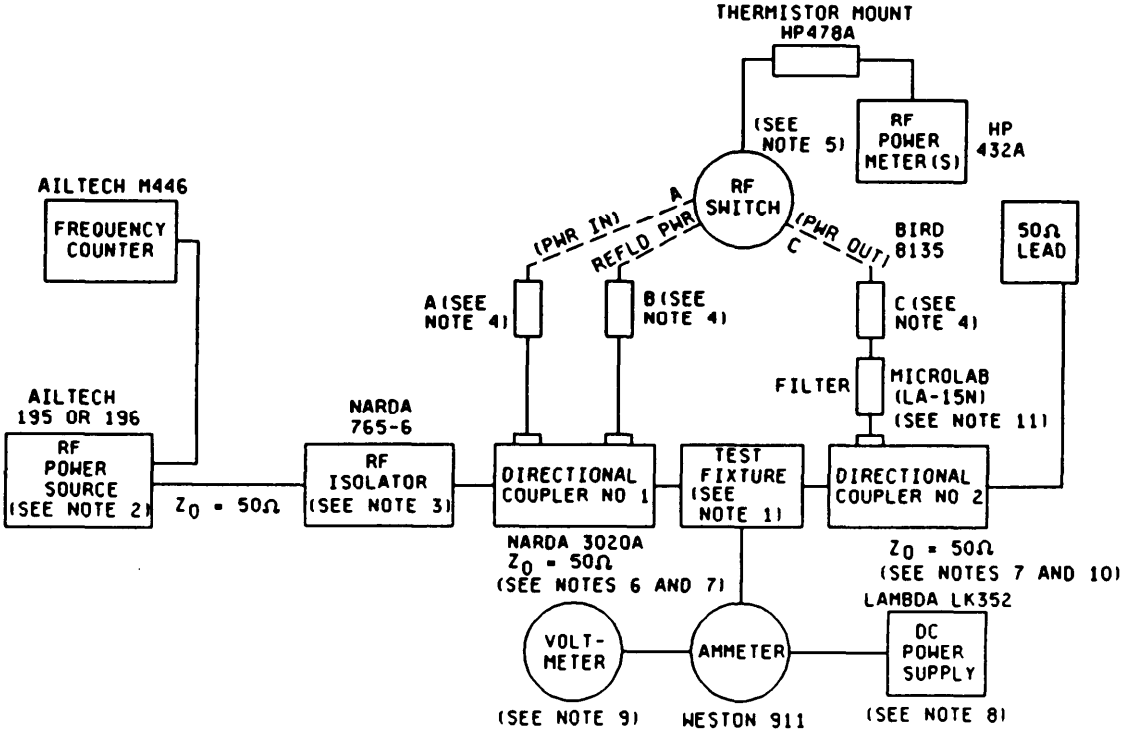

FIGURE 3320-1. Test equipment set-up.

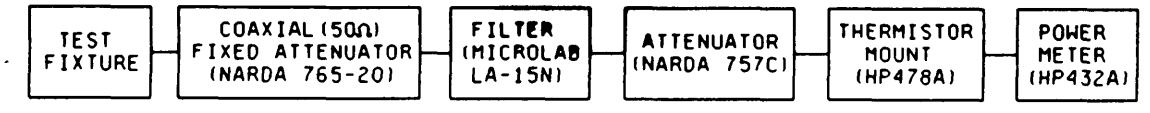

FIGURE 3320-2. Alternate test equipment set-up.

NOTES:

1. Test fixture is the circuit as described in the applicable detail specification (circuit layout and components quality are critical).

2. RF power source shall be a unit capable of generating desired power level at desired frequency with a harmonic and spurious content ≥ 20 dB below operating frequency level of 100 MHz to 1 GHz.

3. The RF isolator shall be a device (e.g., pad, circulator) capable of establishing ≥ 20 dB of isolation between RF power source and test fixture. (A resistive attenuator shall be used for out-of-band isolation.)

FIGURE 3320-2. Alternate test equipment set-up - Continued. .

4. Variable attenuators (or fixed, if calibrated): Attenuators are set so that the actual power into and out of test fixture are known. Attenuation on directional coupler number 2 shall be calibrated against a known working standard either by means of a calibration chart or suitable adjustment if variable. Attenuation at position 'A' of directional coupler number 1 shall be calibrated or adjusted so that actual power at test fixture is known. Attenuation at position 'B' shall be adjusted to l stablish sensitivity needed to measure Reflected power (normally 10 dB less than the attenuation at position 'A').

5. RF switch may be eliminated if additional power meters are used.

6. More than one directional coupler may be used in place of coupler number 1. If more than one coupler is used, the Power In and Reflected power position may be interchanged.

7. The directional couplers shall have a minimum directivity of 30 dB and a nominal 20 dB coupling attenuation except where test level sensitivities require 10 dB or less attenuation.

8. The dc power supply shall be RF decoupled at the test fixture.

9. Voltmeter readings shall be sensed at test fixture, not at power supply.

10. Coupler number 2 and 50 Ω load may be replaced by coaxial fixed attenuators (Narda) and a power meter (HP 432A). Power meter may be separate or connected to the one shown on the other side through port C of the RF switch (see figure 3320-2).

11. If harmonic or subharmonic contents less than 20 dB down from the desired signal are present and could influence the measured output power, a suitable filter (low pass, band pass, or high pass) shall be employed between the attenuator(s) and power meter used for output power measurement.

4. Summary. The following conditions shall be specified in the detail specification:

a. Test voltage (and current, if applicable).

b. Test frequency.

c. Power input (or output).

d. Test circuit with critical parts and layout specified.

e. Parameter to be measured.

TEST CONDITION B

1. Purpose. The purpose of this test is to measure the RF power output, RF power gain, and collector efficiency of a transistor under actual operating conditions in a specific RF amplifier test circuit. Test condition B shall be valid for devices operating at RF power levels greater than O dBm when tested in the frequency range between 100 MHz and 10 GHz.

2. Apparatus. All referenced equipments may be replaced by equipment of equal or superior capability. A typical equipment setup is as follows (see figure 3320-3). All components shall be suitable for the frequency range of measurement.

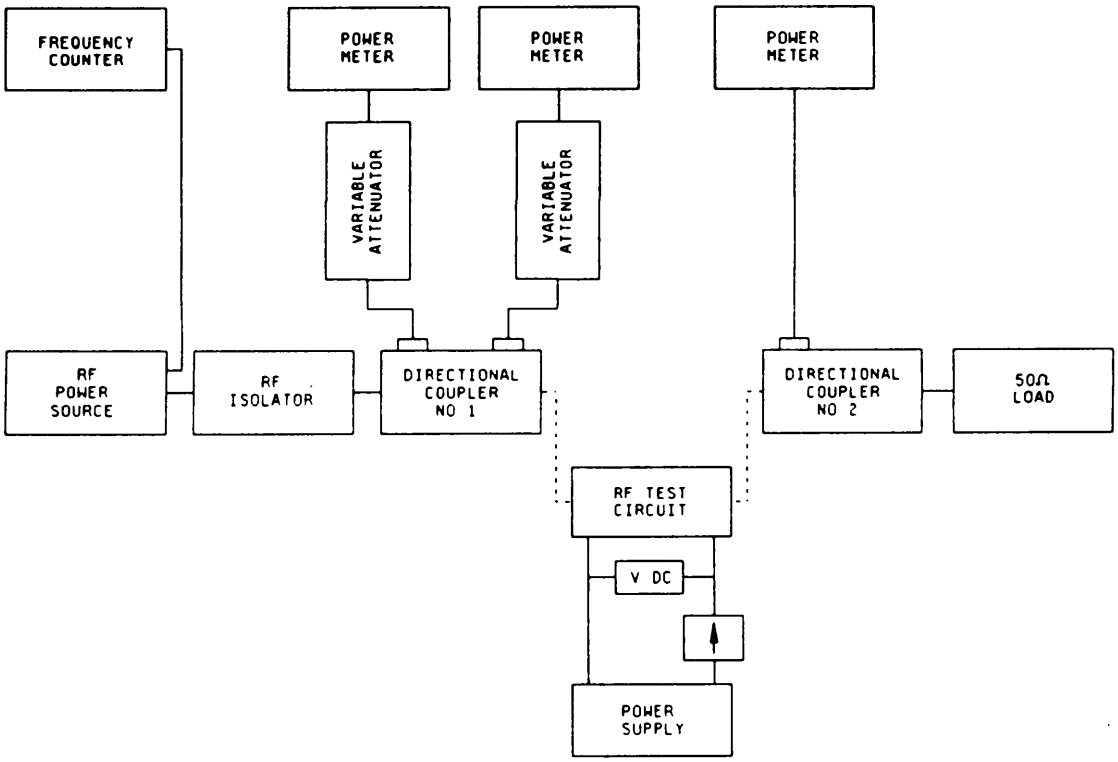

FIGURE 3320-3. RF test set-up.

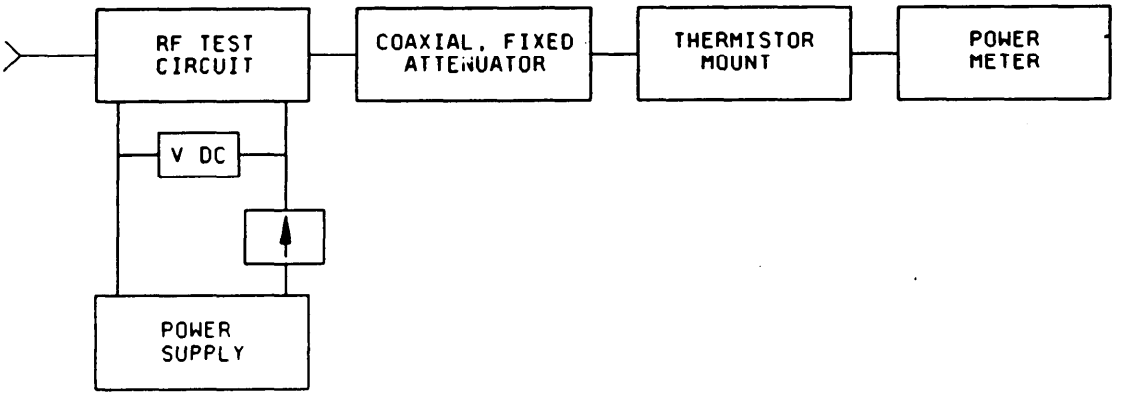

FIGURE 3320-4. Alternate output set-up.

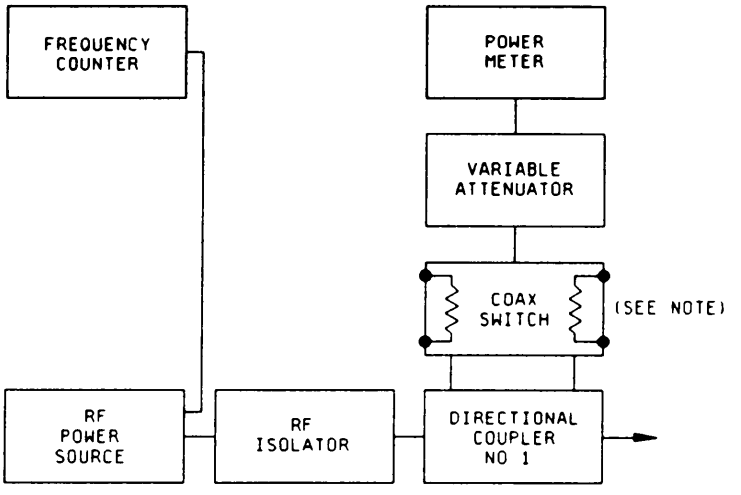

NOTE: The unswitched port automatically terminates the alternate coupler port in 50 Ω when using the coax switch specified in the equipment list.

FIGURE 3320-5. Alternate input set-up.

NOTES:

1. The test fixture referred to in this document is the circuit which is described in the applicable detailed specification (circuit layout and component quality are critical).

2. The RF power source shall be a unit capable of generating desired power levels at the frequency of interest. All harmonics and spurious content shall be at least 26 dB below the output level. When necessary, a suitable filter (low pass or band pass) should be used between the RF source and the isolator to reduce the second harmonic. A similar filter should be used in the output circuit between the coupler and the power meter unless the harmonic levels of the DUT are less than 26 dB below the measurement level. If the filter is to be used, its insertion loss should be calibrated and accounted for at the measurement frequency.

3. Coupler number 2 and the 50 Ω load may be replaced by a coaxial fixed attenuator and a power meter (see figure 3320-4). If employed, the output low pass filter should be placed between the attenuator and power meter.

4. The two power meters connected to coupler number 1 may be replaced by one power meter and a good quality coaxial transfer switch. (The use of such switches is discouraged at frequencies above 4 GHz unless precautions are taken to account for RF losses (see figure 3320-5).) These switches are designed for use in 50 Ω systems. The unstitched port is automatically terminated internally with 50 Ω and loads the alternate coupler port.

5. The RF isolator shall be a device (e.g., pad, circulator) capable of establishing ≥ 20 dB of isolation between RF power source and test fixture.

6. The directional couplers shall have a minimum directivity of 30 dB and a nominal 20 dB coupling attenuation except where test level sensitivities require 10 dB or less attenuation. (Greater accuracy results from using the highest coupling possible, consistent with the measurement.)

7. The dc power supply shall be RF decoupled at the test fixture.

8. Voltmeter readings shall be sensed at the test fixture, not at power supply.

9. A calibrated wavemeter may be used in lieu of the frequency counter specified on figure 3320-3.

1.2 Equipment list. (All referenced equipment may be replaced by equipment of equal or superior quality.)

Equipment	Manufacturer	Model
CW source	As desired	1/
Isolator	Addington Labs	1/
Dual directional coupler	NARDA	3022*
Variable attenuator	Merrimac	AU-25A5
Average power meter	Hewlett-Packard	432 A
Coax switch	Hewlett-Packard	33311 B/C
Fixed attenuator	NARDA	766-20
L.P. filter	Microlab FXR	1/
Power supply	Hewlett-Packard	6296 A
RF test fixture	(See individual specification)	
Voltmeter	Meter-mod Instruments	420 R
Ammeter	Meter-mod Instruments	420 R

2. Test procedure.

2.1 RF setup calibration procedure.

a. With the RF test setup as on figure 3320-3 and with the test fixture removed, hook up the output of coupler number 1 to the input of coupler number 2 (attenuation of directional coupler number 2 shall be calibrated against a known working standard either by means of calibration chart or suitable adjustment if variable).

b. Set the frequency of the source as indicated by the readout of the frequency counter or a dip in the power level when using an in-line wavemeter.

c. Adjust the variable attenuator on the source by decreasing the attenuator until the desired power level is observed on the output power meter (apply correction factor if necessary to correct for coupler number 2 or output attenuator error).

d. Observe the input power meter, and adjust the attenuator associated with this meter until it reads the same power output as the output power meter in 6.1c. (If using the alternate input setup on figure 3320-5, calibrate with coaxial switch in the forward position.)

e. Disconnect the output coupler and power meter from the circuit so that the output of coupler number 1 is open circuited. Adjust the attenuator associated with the reflected power meter until it reads the same as the forward meter. With a calibrated short on the input of the coupler observe the difference in reflected power between an open circuit condition and a short. Adjust the reflected power variable attenuator for an average between the open and short circuit readings. (If using the alternate input setup on figure 3320-5, the reflected power port is automatically calibrated when the forward power is calibrated if both ports of the coupler are balanced.)

1/ Model depends on frequency of test: See manufacturer's catalog for correct model number.

f. Increase the input attenuator until power output is zero (calibration completed).

g. If multiple frequency testing is required repeat 6.1a through 6.1f for each frequency, noting the variable attenuator and source settings for each specified frequency. All equipment must be returned to the noted settings during test at each specified frequency point.

2.2 RF testing.

a. flake certain the dc power supply is off.

b. With the RF test setup on figure 3320-3 or with alternate circuits of figures 3320-4 and 3320-5, and with the test fixture in place, clamp a device in the test fixture.

c. Switch on the dc power supply. Precautions should be observed to prevent voltages exceeding the specified test level.

d. Adjust the attenuator at the source until the input power reads the appropriate power.

e. Observe the output power, reflected power, and collector current (record, if necessary).

f. Increase the attenuator at the source until the input power reads zero.

g. Repeat 6.2a through 6.2f as required with the previously noted power source and attenuator settings. if other test frequencies are required.

h. Switch off the dc power supply.

i. Remove the device from the test fixture.

3. Data required (measurements).

a. Power output (Pout) is measured by adjusting the RF power source as outlined in 6.2 to obtain the specified forward input power and reading the output power in watts.

b. Power input (P_{in}) is measured by adjusting the RF power source to obtain the specified forward output power and reading the input power in watts.

c. Power gain (Gp) is calculated from the measured RF data. P_{in} and P_{out} shall be observed and the gain (in dB) determined as follows:

$$G_p = 10 \log \frac{P_{out}}{P_{in}}$$

d. Collector efficiency (η) is calculated from the measured RF and dc data. The collector effidiency shall be computed as follows:

$$\eta\ (\%) = \frac{P_{out}\ (W)}{P_{in}\ (dc\text{-}w)} \times 100 = \frac{P_{out}\ (W)}{I_C \times V_{CC}} \times 100$$

Where: I_C = Collector current

V_{CC} = Collector supply voltage

e. Reflected power may be observed directly from the power meter if the setup is calibrated as specified in 6.1e. Even though reflected power may not be part of the RF specifications, it is included here because it is an indication as to how much of the input is actually reaching the device. Good practice dictates that, where possible, the external circuit should be adjusted from minimum reflected power.

4. Summary. The following conditions shall be specified in the detail specification:

a. Test voltage (and current if applicable).

b. Test frequency.

c. Power input or power output.

d. Test circuit with critical parts and layout specified.

e. Parameter(s) to be measured.

f. Parameter(s) to be calculated.

g. RF test fixture.

3400 Series

Electrical characteristics tests for MOS field-effect transistors

Circuits are shown for n-channel field-effect transistors in one circuit configuration only. They may readily be adapted for p-channel devices and for other circuit configurations.

METHOD 3401.1

BREAKDOWN VOLTAGE, GATE TO SOURCE

1. Purpose. The purpose of this test is to determine if the breakdown voltage of the field-effect transistor or IGBT under the specified conditions is greater than the specified minimum limit. For the IGBT, replace the drain and source MOSFET designations with collector and emitter IGBT designations, D = C and S = E.

2. Test circuit. See figure 3401-1.

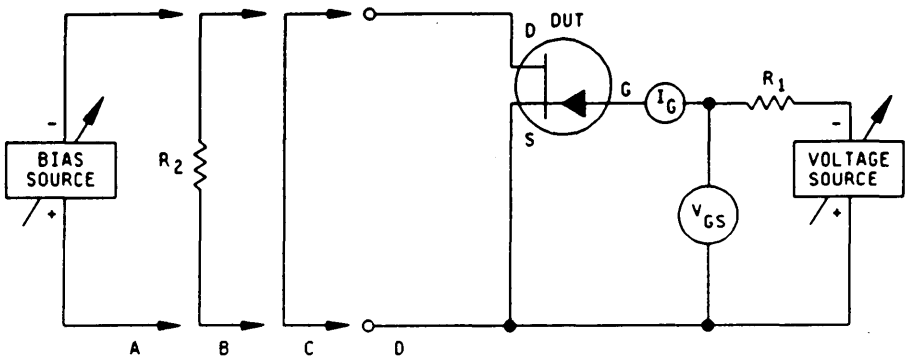

NOTE: The ammeter shall present essentially a short circuit to the terminals between which the current is being measured or the voltmeter readings shall be corrected for the drop across the ammeter.

FIGURE 3401-1. Test circuit for breakdown voltage, gate to source.

3. Procedure. The resistor R_1 is a current-limiting resistor and should be of sufficiently high resistance to avoid excessive current flowing through the device and current meter. The voltage shall be gradually increased, with the specified bias condition (condition A, B, C, or D) applied, from zero until either the minimum limit for $V_{(BR)GSX}$ 1/ or the specified test current is reached. The device is acceptable if the minimum limit for $V_{(BR)GSX}$ is reached before the test current reaches the specified value. If the specified test current is reached first, the device shall be considered a failure.

4. Summary. The following conditions shall be specified in the detail specification:

a. Test current (see 3.).

b. Bias condition:

A: Drain to source: Reverse bias (specify bias voltage).

B: Drain to source: Resistance return (specify resistance of R_2).

C: Drain to source: Short circuit.

D: Drain to source: Open circuit.

1 / $V_{(BR)GSX}$: Breakdown voltage, gate to source, with the specified bias condition applied from drain to source.

METHOD 3403.1

GATE TO SOURCE VOLTAGE OR CURRENT

1. Purpose. The purpose of this test is to measure the gate to source voltage or current of the field-effect transistor or IGBT under the specified conditions. For the IGBT, replace the drain and source MOSFET designations with collector and emitter IGBT designations, D = C and S = E.

2. Test circuit. See figure 3403-1.

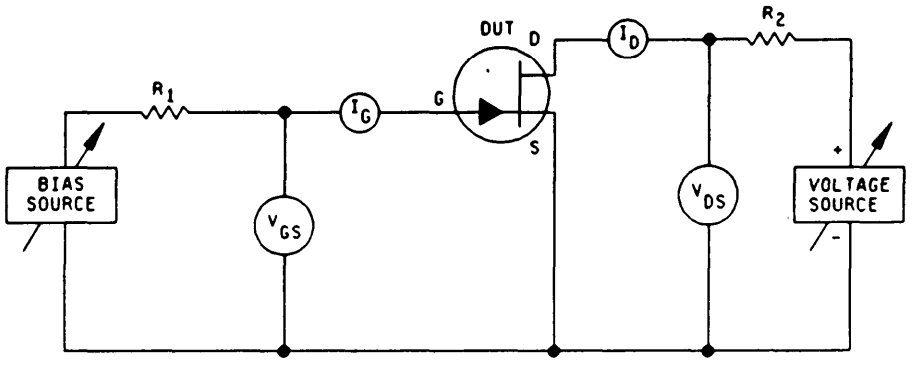

NOTE: The ammeter shall present essential[y a short circuit to the terminals between which the current is being measured or the voltmeter readings shall be corrected for the drop across the ammeter.

FIGURE 3403-1. Test circuit for breakdown voltage, gate to source.

3. Procedure. The voltage source and bias source shall be adjusted to bring V_{DS} and I_D to their specified values. The voltage V_{GS} or current I_G may then be read.

4. Summary. The following conditions shall be specified in the detail specification:

a. Test voltages and currents (see 3.).

b. Parameter to be measured.

METHOD 3404

MOSFET THRESHOLD VOLTAGE

1. Purpose. This method establishes the means for measuring MOSFET threshold voltage. This q ethod applies to both enhancement-mode and depletion-mode MOSFETS, and for both silicon on sapphire and bulk-silicon MOSFETs. It is for use primarily in evaluating the response of MOSFETs to ionizing radiation, and for this reason the test differs from conventional methods for measuring threshold voltage.

1.1 Definition.

MOSFET threshold voltage, $V_{GS(TH)}$: The gate-to-source voltage at which the drain current is reduced to the leakage current, as determined by this method.

2. Apparatus. The apparatus shall consist of a suitable ammeter, voltmeters, and voltage sources.. The apparatus may be manually adjusted or, alternatively, may be digitally programmed or controlled by a computer. Such alternative arrangements shall be capable of the same accuracy as specified below for manually adjusted apparatus.

2.1 Ammeter (A_1). The ammeter shall be capable of measuring current in the range specified with a full scale accuracy of ±0.5 percent or better.

2.2 Voltmeters (V_1 and V_2). The voltmeters shall have an input impedance of 10 MΩ or greater and have a capability of measuring 0 to 20 V with a full scale accuracy of ±0.5 percent or better.

2.3 Voltage sources (V_{GS} and V_{DS}). The voltage sources shall be adjustable over a nominal range of O to 20 V, have a capability of supplying output currents at least equal to the maximum rated drain current of the device to be tested, and have noise and ripple outputs less than 0.5 percent of the output voltage.

3. Procedure.

WARNING: The absolute maximum values of power dissipation, drain-to-source voltage, drain current, or gate-to-source voltage specified is either the applicable acquisition document or the manufacturer's specifications shall not be exceeded under any circumstances.

3.1 N-channel devices.

3.1.1 Test circuit for n-channel devices. The test circuit shown on figure 3404-1 shall be assembled and the apparatus turned on. With the voltage sources V_{DS} and V_{GS} set to O volts, the MOSFET to be tested shall be inserted into the test circuit. The gate-to-source polarity switch shall be set to the appropriate position, and voltage source V_{GS} shall be set 1.0 V negative with respect to the anticipated value of threshold voltage $V_{GS(TH)}$. Voltage source V_{DS} shall be adjusted until. voltmeter V_2 indicates the specified drain-to-source voltage V_{DS}. The current ID, indicated by ammeter A_1, and the gate-to-source voltage V_{GS}, indicated by voltmeter V_1, shall be measured and recorded.

3.1.2 Measurement for n-channel devices. The measurement shall be repeated at gate-to-source voltages which are successively 0.25 volts more positive until either the maximum gate-to-source voltage or maximum drain current is reached. If the gate-to-source voltage reaches O volts before either of these limits has been reached, the gate-to source polarity switch shall be changed as necessary and measurements shall continue to be made at gate-to-source voltages which are successively 0.25 volts more positive until one of these limits has been reached.

3.2 P-channel devices.

3.2.1 Test circuit for p-channel devices. The test circuit shown on figure 3404-2 shall be assembled and the apparatus turned on. With the voltage sources V_{GS} and V_{DS} set to O volts, the MOSFET to be tested shall be inserted into the test circuit. The gate-to-source polarity switch shall be set to the appropriate position, and voltage source V_{GS} shall be set 1.0 V positive with respect to the anticipated value of threshold voltage $V_{GS(TH)}$. Voltage source V_{DS} shall be adjusted until voltmeter V_2 indicates the specified drain-to-source voltage V_{DS}. The current ID, indicated by ammeter A_1, and the gate-to-source voltage V_{GS}, indicated by voltmeter V_1, shall be measured and recorded.

3.2.2 Measurement for p-channel devices. The measurement shall be repeated at gate-to-source voltages are successively 0.25 volts more negative until either the maximum gate-to-source voltage or maximum drain current is reached. If the gate-to-source voltage reaches O volts before either of these limits has been reached, the gate-to-source polarity switch shall be changed as necessary and measurements shall continue to be made at gate-to-source voltages which are successfully 0.25 volts more negative until one of these limits has been reached.

3.3 Leakage current measurement. Using method 3415, the leakage current shall be measured.

3.3.1 Drain-to-source voltage. The drain-to-source voltage shall be as specified in 4.b.

3.3.2 Gate-to-source voltage. The gate-to-source voltage shall be five volts different from the anticipated threshold voltage in the direction of reduced drain current.

3.4 Gate-to-source voltage graph. The gate-to-source voltage V_{GS} shall be plotted versus the square-root of the drain current minus the leakage current, $\sqrt{I_D - I_L}$. At the point of maximum slope, a straight line shall be extrapolated downward. The threshold voltage $V_{GS(TH)}$ is the intersection of this line with the gate-to-source voltage axis. Examples are shown on figure 3404-3.

3.5 Report. As a minimum, the report shall include the device identification, the test date, the test operator, the test temperature, the drain-to-source voltage, the range of gate-to-source voltage, the leakage current, and the threshold voltage.

4. Summary. The following conditions shall be specified in the detail specification:

a. Test temperature. Unless otherwise specified, the test shall be performed at ambient.

b. Drain-to-source voltage.

c. Maximum drain current.

d. Range of gate-to-source voltage.

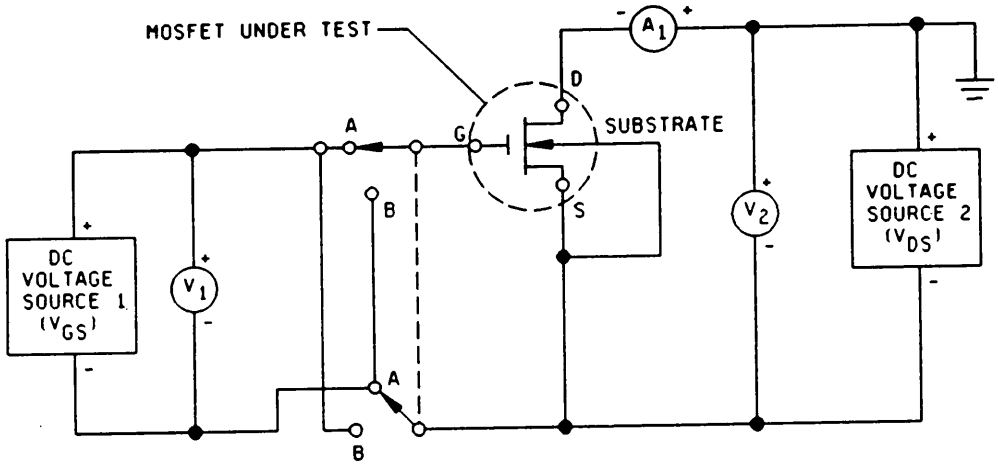

NOTE: Gate-to-source polarity switch set at:
A for enhancement mode
B for depletion mode

FIGURE 3404-1. Test circuit for n-channel MOSFETs.

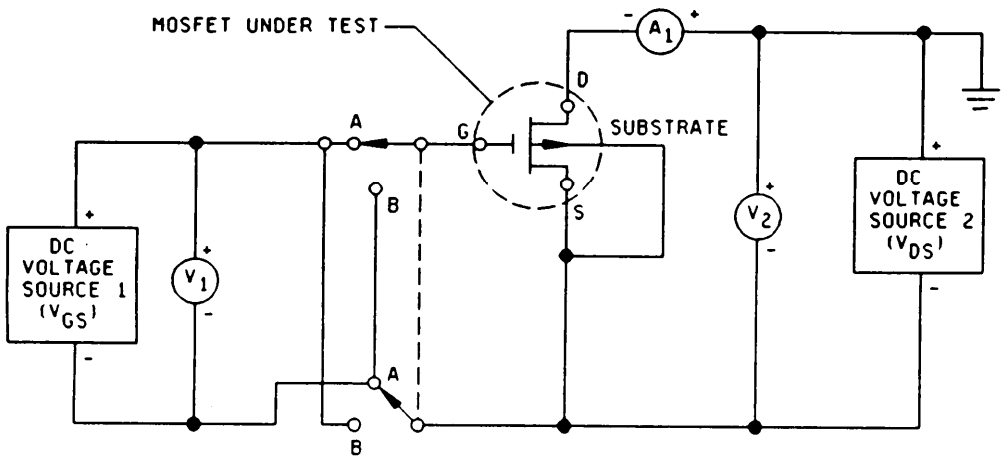

NOTE: Gate-to-source polarity switch set at:
A for enhancement mode
B for depletion mode

FIGURE 3404-2. Test circuit for p-channel MOSFETs.

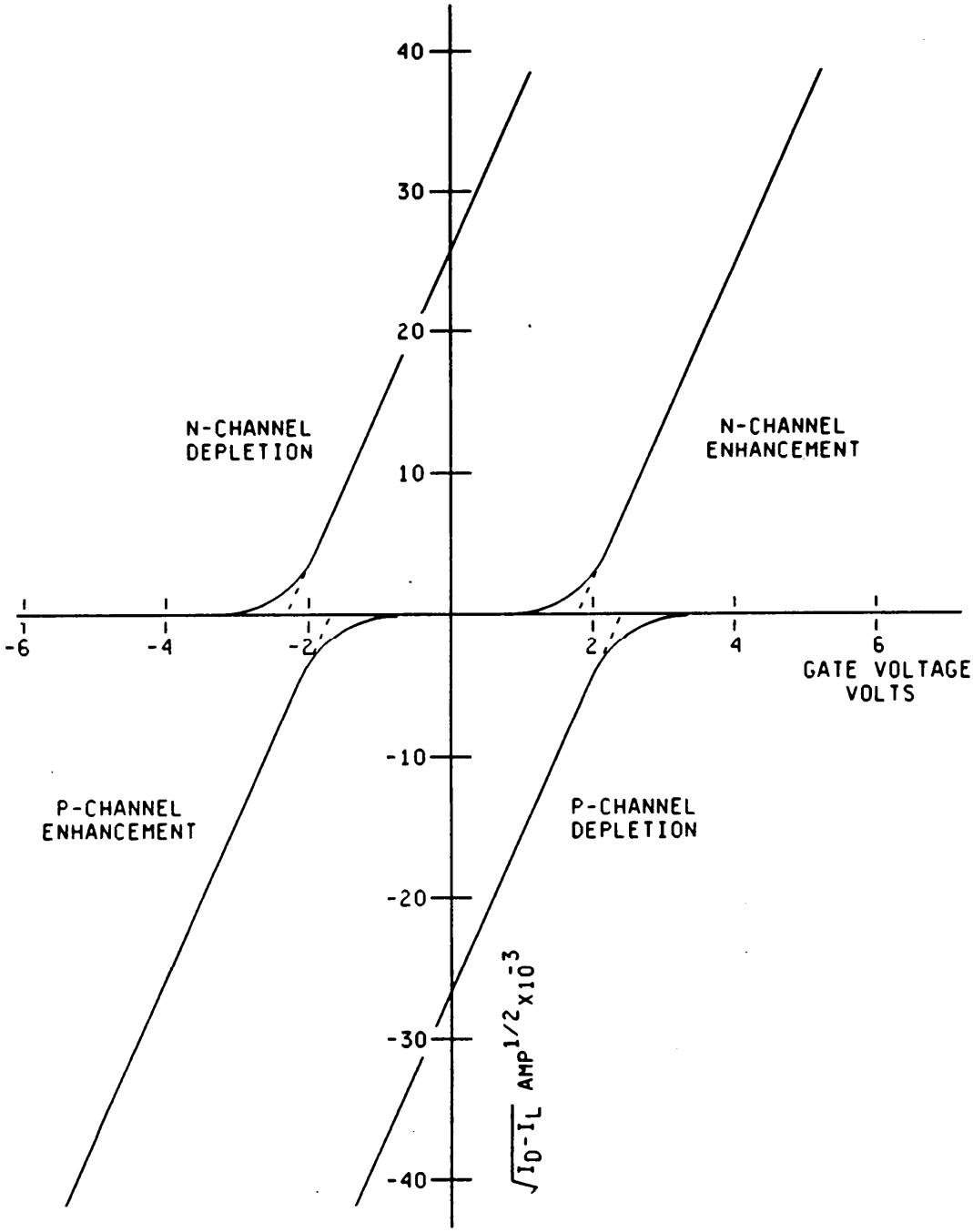

FIGURE 3404-3. Examples of curves.

METHOD 3405.1

DRAIN TO SOURCE ON-STATE VOLTAGE

1. Purpose. The purpose of this test is to measure the drain to source voltage of the field-effect transistor or IGBT at the specified value of drain current. For the IGBT, replace the drain and source MOSFET designations with collector and emitter IGBT designations, D = C and S = E.

2. Test circuit. See figure 3405-1.

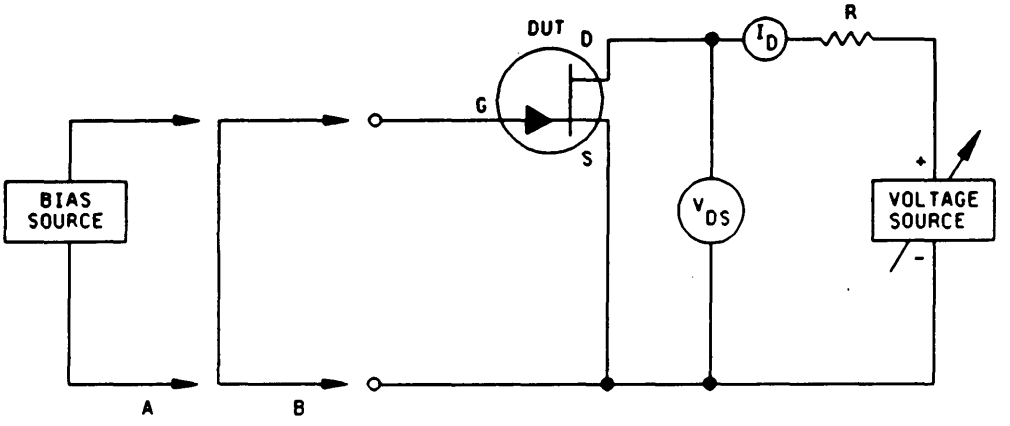

FIGURE 3405-1. Test circuit for drain to source on-state voltage.

3. Procedure. The specified bias condition shall be applied between the gate and source and the voltage source shall be adjusted to bring I_D to the specified value. The voltage V_{DS} may then be read.

4. Summary. The following conditions shall be specified in the detail specification:

a. Test current (see 3.).

b. Gate to source bias condition

A: Voltage-biased (specify b as voltage and polarity).

B: Short-circuited.

METHOD 3407.1

BREAKDOWN VOLTAGE, DRAIN TO SOURCE

1. Purpose. The purpose of this test is to determine if the breakdown voltage of the field-effect transistor or IGBT under the specified conditions is greater than the specified minimum limit. For the IGBT, replace the drain and source MOSFET designations with collector and emitter IGBT designations, D = C and S = E.

2. Test circuit. See figure 3407-1.

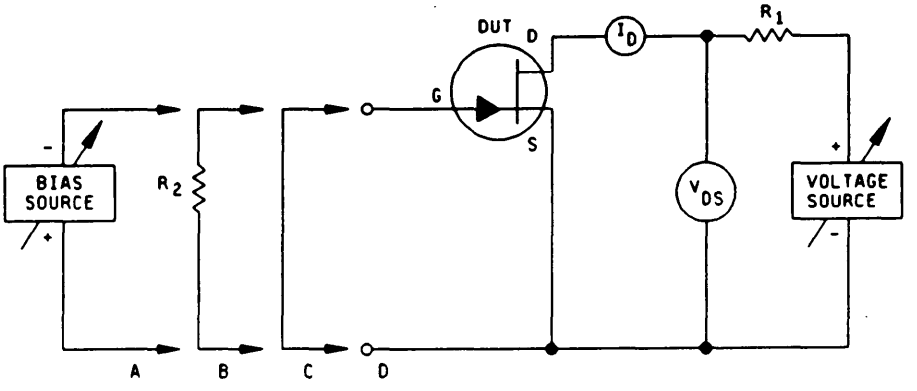

NOTE: The ammeter shall present essentially a short circuit to the terminals between which the current is being measured or the voltmeter readings shall be corrected for the drop across the ammeter.

FIGURE 3407-1. Test circuit for breakdown voltage, drain to source.

3. Procedure. The resistor R_1 is a current-limiting resistor and should be of sufficiently high resistance to avoid excessive current flowing through the device and current meter. The voltage shall be gradually increased from zero, with the specified bias condition (condition A, B, C, or D) applied, until either the minimum limit for $V_{(BR)DSX}$ 1/ or the specified test current is reached. The device is acceptable if the minimum limit for $V_{(BR)DSX}$ is reached before the test current reaches the specified value. If the specific, test current is reached first, the device shall be considered a failure.

4. Summary. The following conditions shall be specified in the detail specification.

a. Test current (see 3.).

b. Bias condition:

A: Gate to source: Reverse bias. (Specify bias voltage.)

B: Gate to source: Resistance return. (Specify resistance of R_2.)

C: Gate to source: Short circuit.

D: Gate to source: Open circuit.

1/ $V_{(BR)DSX}$: Breakdown voltage, drain to source, with the specified bias condition applied from gate to source.

METHOD 3411.1

GATE REVERSE CURRENT

1. Purpose. The purpose of this test is to measure the gate reverse current of the field-effect transistor or IGBT under the specified conditions. For the IGBT, replace the drain and source MOSFET designations with collector and emitter IGBT designations, D = C and S = E.

2. Test circuit. See figure 3411-1.

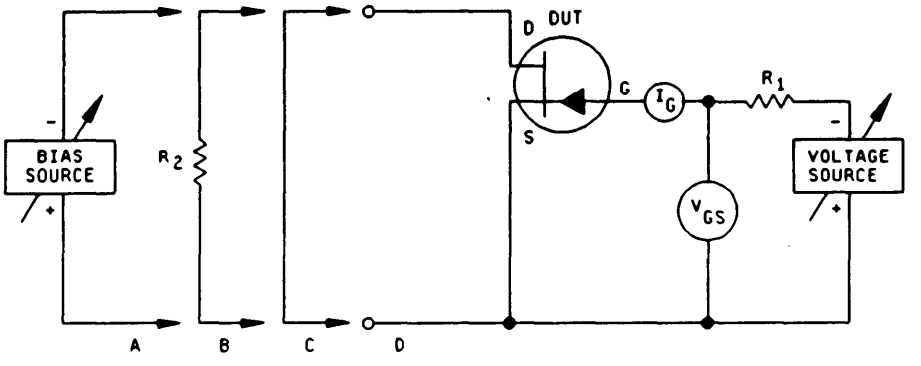

NOTE: The ammeter shall present essentially a short-circuit to the terminals between which the current is being measured or the volt meter readings shall be corrected for the drop across the ammeter.

FIGURE 3411-1. Test circuit for gate reverse current.

3. Procedure. The specified dc voltage shall be applied between the gate and the source with the specified bias condition (condition A, B, C, or D) applied to the drain The measurement of current shall be made at the specified ambient or case temperature.

4. Summary. The following conditions shall be specified in the detail specification:

a. Test voltage (see 3.).

b. Test temperature if other than +25°C ±3°C ambient (see 3.).

c. Bias condition:

A: Drain to source: Reverse bias. (Specify bias voltage.)

B: Drain to source: Resistance return. (Specify resistance of R_2.)

C: Drain to source: Short circuit.

D: Drain to source: Open circuit.

METHOD 3413.1

DRAIN CURRENT

1. Purpose. The purpose of this test is to measure the drain current of the field-effect transistor or IGBT under the specified conditions. For the IGBT, replace the drain and source MOSFET designations with collector and emitter IGBT designations, D = C and S = E.

2. Test circuit. See figure 3413-1.

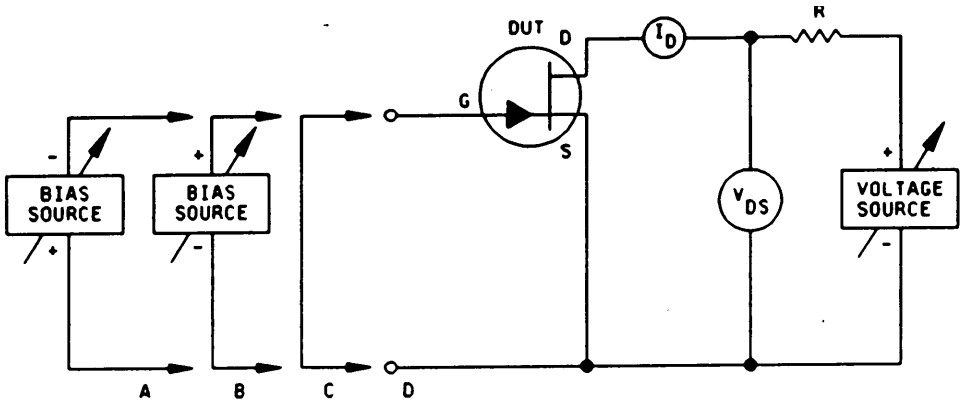

NOTE: The ammeter shall present essentially a short-circuit to the terminals between which the current is being measured or the volt meter readings shall be corrected for the drop across the ammeter.

FIGURE 3413.-1. Test circuit for drain current.

3. Procedure. The specified voltage shall be applied between the drain and source with the specified bias condition (condition A, B, C, or D) applied to the gate. The measurement of current shall be made at the specified ambient or case temperature.

4. Summary. The following conditions shall be specified in the detail specification:

a. Test voltage (see 3.).

b. Test temperature if other than +25°C ±3°C ambient (see 3.).

c. Parameter to be measured.

d. Bias condition:

A: Gate to source: Reverse bias. (Specify bias voltage.).

B: Gate to source: Forward bias. (Specify bias voltage.)

C: Gate to source: Short circuit.

D: Gate to source: Open circuit.

METHOD 3415.1

DRAIN REVERSE CURRENT

1. Purpose. The purpose of this test is to measure the drain reverse current of the field-effect transistor or IGBT under the specified conditions. For the IGBT, replace the drain and source MOSFET designations with collector and emitter IGBT designations, D = C and S = E.

2. Test circuit. See figure 3415-1.

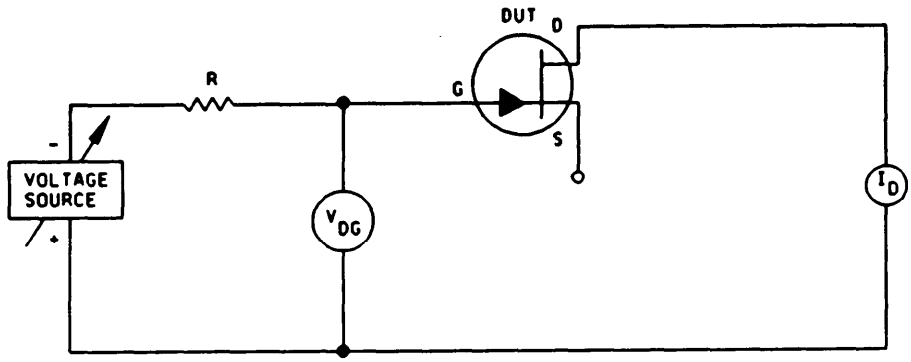

NOTE: The ammeter shall present essentially a short-circuit to the terminals between which the current is being measured or the volt meter readings shall be corrected for the drop across the ammeter.

FIGURE 3415-1. Test circuit for drain reverse current.

3. Procedure. The specified dc voltage shall be applied between the drain and the gate. The measurement of current shall be made at the specified ambient or case temperature.

4. Summary. The following conditions shall be specified in the detail specification:

a. Test voltage (see 3.).

b. Test temperature if other than +25°C ±3°C ambient (see 3.).

METHOD 3421.1

STATIC DRAIN TO SOURCE ON-STATE RESISTANCE

1. Purpose. The purpose of this test is to measure the resistance between the drain and source of the field-effect transistor or IGBT under the specified static condition. For the IGBT, replace the drain and source MOSFET designations with collector and emitter IGBT designations, D = C and S = E.

2. Test circuit. See figure 3421-1.

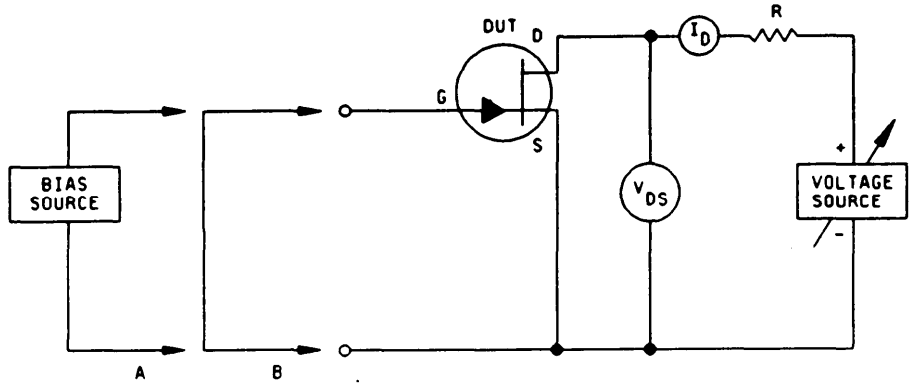

FIGURE 3421-1. Test circuit for static drain to source on-state resistance.

3. Procedure. The specified bias condition shall be applied between the gate and source and the voltage source shall be adjusted so that the specified current is achieved. The drain to source voltage shall then be measured.

$$\text{Then:} \quad r_{DS(on)} = \frac{V_{DS}}{I_D}$$

4. Summary. The following conditions shall be specified in the detail specification:

a. Test currents.

b. Gate to source bias condition:

A: Voltage-biased (specify biased (specify bias voltage and polarity).

B: Short circuited.

METHOD 3423

SMALL-SIGNAL, DRAIN TO SOURCE ON-STATE RESISTANCE

1. Purpose. The purpose of this test to measure the resistance between the drain and source of the field-effect transistor under the specified small-signal conditions.

2. Test circuit. See figure 3423-1.

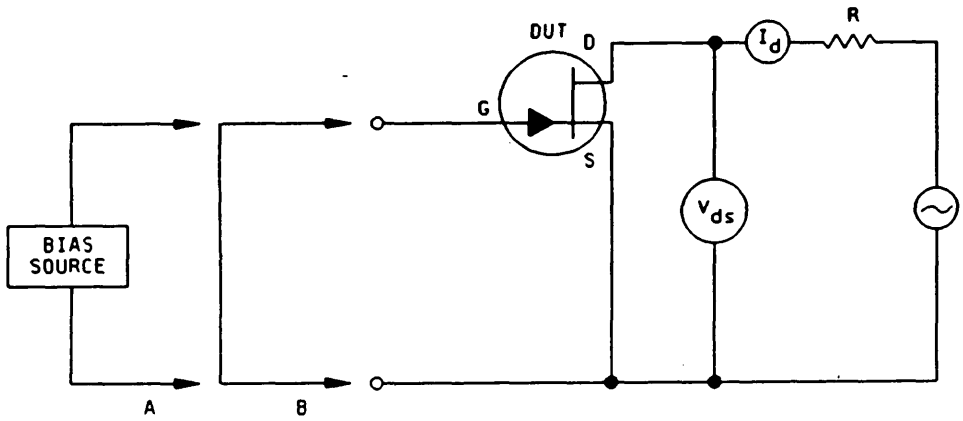

NOTE: The ac voltmeter shall have an input impedance high enough that halving it does not change the measured value within the required accuracy of the measurement.

FIGURE 3423-1. Test circuit for small-signal, drain to source on-state resistance.

3. Procedure. The specified bias condition shall be applied between the gate and the source and an ac sinusoidal signal current, I_d, of the specified rms value shall be applied.

$$\text{Then:} \quad r_{ds(on)} = \frac{V_{ds}}{I_d}$$

4. Summary. TF following conditions shall be specified in the detail specification:

a. Test current (see 3.).

b. Test frequency.

c. Gate to source bias condition:

A: Voltage-biased (specify bias voltage and polarity).

B: Short-circuited.

METHOD 3431

SHALL-SIGNAL, COMMON-SOURCE, SHORT-CIRCUIT, INPUT CAPACITANCE

1. Purpose. The purpose of this test is to measure the input capacitance of the field-effect transistor under the specified small-signal conditions.

2. Test circuit. The circuit and procedure shown are for common-source configuration. For other configurations the circuit and procedure should be changed accordingly.

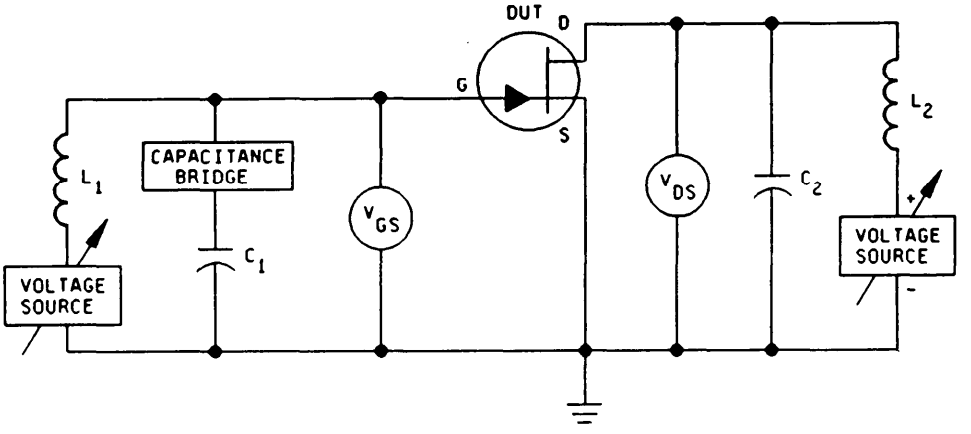

FIGURE 3431-1. Test circuit for small-signal, common-source, short-circuit, input capacitance.

3. Procedure. The capacitors C_1 and C_2 shall present short circuits at the test frequency. L_1 and L_2 shall present a high ac impedance at the test frequency for isolation. The bridge shall have low dc resistance between its output terminals and should be capable of carrying the test current without affecting the desired accuracy of measurement.

4. Summary. The following conditions shall be specified in the detail specification:

a. Test voltages and currents.

b. Measurement frequency.

c. Parameter to be measured.

METHOD 3433

SMALL-SIGNAL, COMMON-SOURCE, SHORT-CIRCUIT, REVERSE-TRANSFER CAPACITANCE

1. Purpose. The purpose of this test is to measure the reverse-transfer capacitance of the field-effect transistor under the specified conditions.

2. Test circuit. The circuit and procedure shown are for common-source configuration. For other configurations the circuit and procedure should be changed accordingly. Terminal 2 of bridge shall be the terminal with an ac potential closest to the ac potential of the guard terminal so as to provide an effective short circuit of the input.

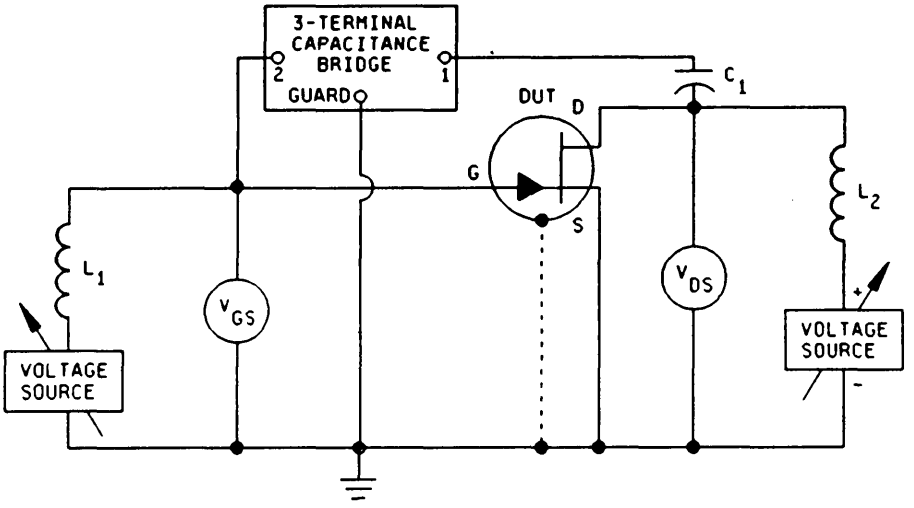

NOTE: The dotted connection between the case and ground shall be used for devices in which the case is not internally electrically connected to any element. If the case is internally electrically connected to any element, the dotted connection shall not be used.

FIGURE 3433-1. Test circuit for small signal, common-source, short-circuit, reverse-transfer capacitance.

3. Procedure. The capacitor Cl shall present a short circuit at the test frequency. L_1 and L_2 shall present a high ac impedance at the test frequency for isolation. The bridge shall have low dc resistance between its output terminals and should be capable of carrying the test current without affecting the desired accuracy of measurement.

4. Summary. The following conditions shall be specified in the detail specification:

a. Test voltages and currents.

b. Measurement frequency.

c. Parameter to be measured.

METHOD 3453

SMALL-SIGNAL, COMMON-SOURCE, SHORT-CIRCUIT, OUTPUT ADMITTANCE

1. Purpose. The purpose of this test is to measure the output admittance of the field-effect transistor under the specified small-signal conditions.

2. Test circuit. The circuit and procedure are shown for common-source configuration. For other configurations the circuit and procedure should be changed accordingly.

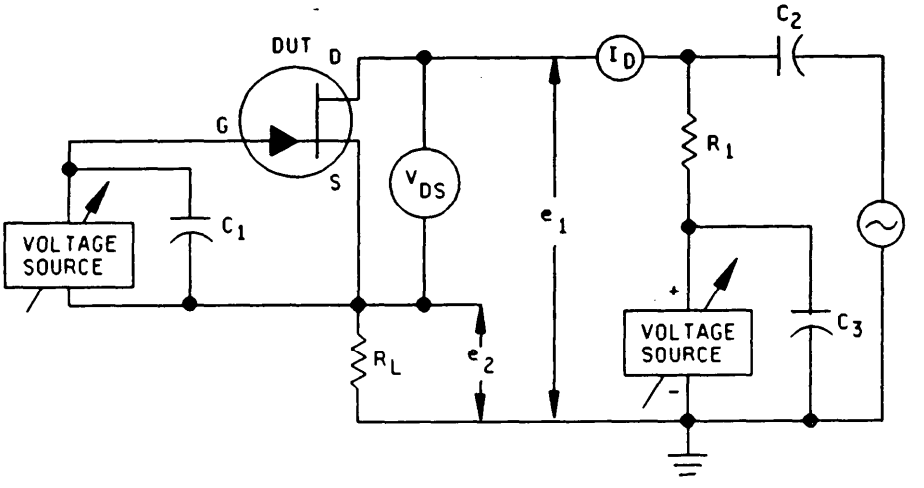

FIGURE 3453-1. Test circuit for small-signal, common-source, short-circuit, output admittance.

3. Procedure. The capacitors C_1, C_2, and C_3 shall present short circuits at the test frequency in order to effectively couple and bypass the test signal. R_1 and R_L shall be short circuits compared with the output impedance of the device. After setting the specified dc conditions, the V_{DS} meter shall be disconnected from the circuit while measuring e_1 and e_2. The voltages e_1 and e_2 shall be measured with high-impedance ac voltmeters.

$$\text{Then:}\quad y_{os} = \frac{I_d}{e_1 - e_2} \quad \text{Where:}\quad I_d = \frac{e_2}{R_L} \quad \text{Thus:}\quad y_{os} = \frac{\frac{e_2}{R_L}}{e_1 - e_2}$$

4. Summary. The following conditions shall be specified in the detail specification:

a. Test frequency.

b. Test voltages and currents.

c. Parameter to be measured.

METHOD 3455

SMALL-SIGNAL, COMMON-SOURCE, SHORT-CIRCUIT, FORWARD TRANSADMITTANCE

1. Purpose. The purpose of the test is to measure the forward transadmittance of the field-effect transistor under the specified small-signal conditions.

2. Test circuit. The circuit and procedure shown are for common-source configuration. For other configurations the circuit and procedure should be changed accordingly.

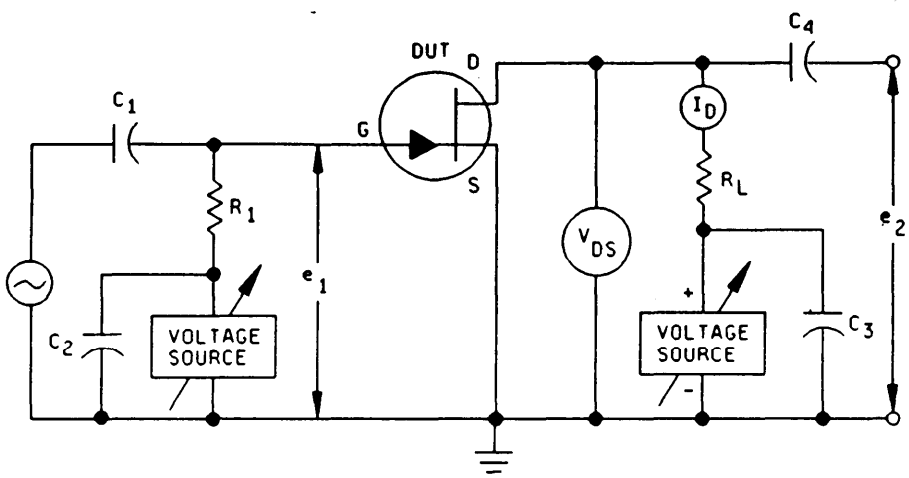

FIGURE 3455-1. Test circuit for small-signal, common-source, short-circuit, forward transadmittance.

3. Procedure. The capacitors C_1, C_2, C_3, and C_4 shall present short circuits at the test frequency in order to effectively couple and bypass the test signal. R_1 shall be a short circuit compared with the input impedance of the device. R_L shall be a short circuit compared with the output impedance of the device. The voltages e_1 and e_2 shall be measured with high-impedance ac voltmeters.

$$\text{Then:}\quad y_{fs} = \frac{I_d}{e_1} \qquad \text{Where:}\quad I_d = \frac{e_2}{R_L} \qquad \text{Thus:}\quad y_{fs} = \frac{\frac{e_2}{R_L}}{e_1} = \frac{e_2}{e_1 \cdot R_L}$$

4. Summary. The following conditions shall be specified in the detail specification:

a. Test frequency.

b. Test voltages and currents.

c. Parameter to be measured.

METHOD 3457

SMALL-SIGNAL, COMMON-SOURCE, SHORT-CIRCUIT,
REVERSE TRANSFER ADMITTANCE

1. Purpose. The purpose of the test is to measure the reverse transfer admittance under the specified small-signal conditions.

2. Test circuit. The circuit and procedure shown are for common-source configuration. For other configurations, the circuit and procedure should be changed accordingly.

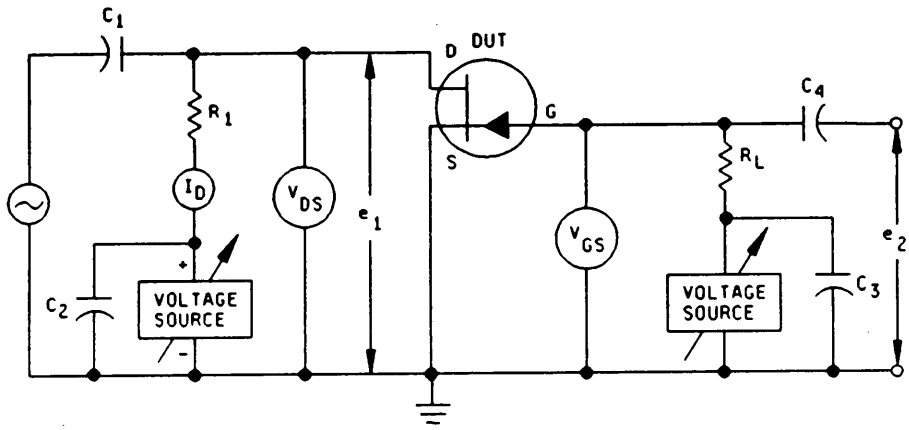

FIGURE 3457-1. Test circuit for small-signal, common-source, short-circuit, reverse transfer admittance.

3. Procedure. The capacitors C_1, C_2, C_3, and C_4 shall present short circuits at the test frequency in order to effectively couple and bypass the test signal. R_1 shall be impedance matched to the generator. R_L shall be a short-circuit compared with the input impedance of the device. The rms voltages e_1 and e_2 shall be measured with high-impedance ac voltmeters.

V_{DS} shall be adjusted to the specified value, then the gate voltage supply shall be adjusted so that V_{GS} or ID equals the specified value, and the voltages e_1 and e_2 shall be measured.

$$\text{Then:} \quad y_{rs} = \frac{I_g}{e_1} \qquad \text{Where:} \quad I_g = \frac{e_2}{R_L}$$

$$\text{Thus:} \quad y_{rs} = \frac{\frac{e_2}{R_L}}{e_1} \quad \text{or} \quad y_{rs} = \frac{e_2}{e_1 R_L}$$

4. Summary. The following conditions should be specified in the detail specification:

a. Test frequency.

b. Test voltages and currents.

c. Parameter to be measured.

METHOD 3459

PULSE RESPONSE (FET)

1. Purpose. The purpose of this test is to measure the pulse response ($t_{d(on)}$, t_r, $t_{d(off)}$, and t_f) of the field-effect transistor under the specified conditions.

2. Test circuit. The test circuit shall be as shown in the individual specification.

3. Procedure. The FET shall be tested in the specified circuit. $V_{in(on)}$, $V_{in(off)}$, pulse generator impedance, all circuit components, and supply voltages shall be as specified.

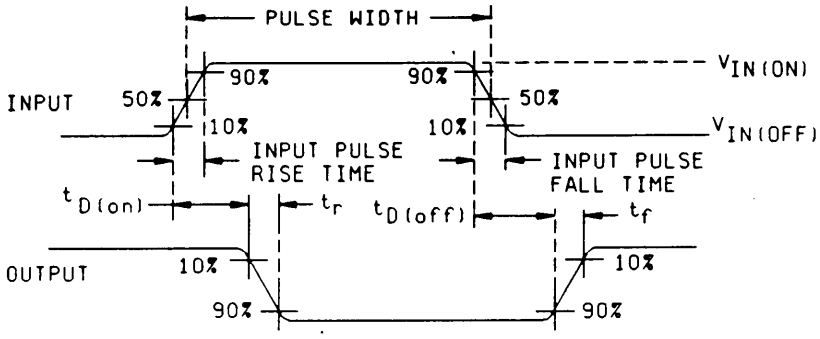

FIGURE 3459-1. Pulse characteristics.

Pulse characteristics are defined on figure 3459-1. The rise time, fall time, duty cycle or pulse repetition rate, and pulse width of the input waveform together with the input resistance, capacitance, and response time of the response detector shall all be such that halving or doubling these parameters will not affect the results of the measurement greater than the precision of measurement.

4. Summary. The following conditions shall be specified in the detail specification:

a. Input pulse levels $V_{in(on)}$ and $V_{in(off)}$.

b. Output impedance of pulse generator.

c. Circuit with all components.

d. All supply voltages.

e. Parameters to be measured.

METHOD 3461

SMALL-SIGNAL, COMMON-SOURCE, SHORT-CIRCUIT, INPUT ADMITTANCE

1. Purpose. The purpose of this test is to measure the input admittance of the field-effect transistor under the specified small-signal conditions.

2. Test circuit. The circuit and procedure shown are for common-source configuration. For other configurations the circuit and procedure should be changed accordingly.

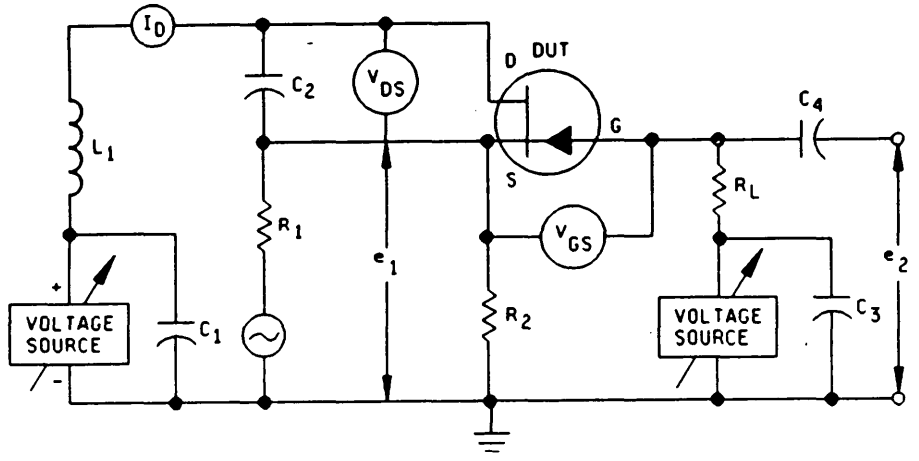

FIGURE 3461-1. Test circuit for small-signal, common-source, short-circuit, input admittance.

3. Procedure. The capacitors C_1, C_2, C_3, and C_4 shall present short circuits at the test frequency in order to effectively couple and bypass the test signal. R_1 facilitates the adjustment of e_1. Its use is optional. R_2 shall be such that dc biasing is possible. R_L shall be a short circuit compared with the input impedance of the device. V_{DS} shall be adjusted to the specified value, then the gate voltage supply shall be adjusted so that V_{GS} or I_D equals the specified value, and the voltages e_1 and e_2 shall be measured.

$$\text{Then:} \quad y_{is} = \frac{I_g}{e_1 - e_2} \qquad \text{Where:} \quad I_g = \frac{e_2}{R_L}$$

$$\text{Thus:} \quad y_{is} = \frac{\frac{e_2}{R_L}}{e_1 - e_2} \quad \text{or} \quad y_{is} = \frac{e_2}{R_L\,(e_1 - e_2)}$$

e_1 must be greater than e_2; therefore, $y_{is} = \dfrac{e_2}{R_L\ e_1}$

4. Summary. The following conditions shall be specified in the detail specification:

a. Test frequency.

b. Test voltages and currents.

c. Parameter to be measured.

METHOD 3469

REPETITIVE UNCLAMPED INDUCTIVE SWITCHING

1. Purpose. This purpose of this test method is to determine the repetitive inductive avalanche switching capability of power devices.

2. Scope. This method is intended as an endurance test for any power switching device designed and specified with repetitive avalanche capability.

3. Circuitry. The basic circuit is shown on figure 3469-1. The circuit shall be designed so that all stray reactance are held to a minimum. The inductor L shall be of a fast response type.

4. Definitions. The following terms and symbols apply to this test method:

T_J: Junction temperature.

$T_{J(max)}$: The maximum specified junction temperature.

$R_{\Theta JC}$: Thermal resistance from the junction to the case.

L: Load inductance in accordance with DUT.

E_{AR}: Repetitive avalanche energy, minimum.

I_{AR}: Repetitive avalanche current, maximum.

E_{on}: On state energy.

f: Frequency.

T_C: Case temperature.

P_D: Power dissipation of device.

$V_{(BR)}$: Breakdown or avalanche voltage of device.

V_{DD}: Power supply voltage.

R_S: Stray circuit resistance.

t_{av}: time in avalanche.

5. Procedure.

5.1 Screening. The DUT must be screened prior to avalanche and meet all specified parameters.

5.2 Calculations. The energy delivered to the DUT can be calculated as follows:

a.

$$E_{AR} = \frac{\dfrac{L * I_{AR}^2 * V_{(BR)}}{\left[V_{(BR)} - V_{DD}\right]}}{2}$$

NOTE: $R_S = 0$, where, $V_{(BR)} = \dfrac{LI_{AR}^2}{t_{AV}}$

$$E_{AR} = V_{(BR)}\ I_{AR}\ \left(\frac{L}{R_S}\right)\ \ln\left[\frac{I_{AR}\ R_S}{(V_{BR} - V_{DD}) + 1}\right]$$

NOTE: $R_S \neq 0$

5.2.1 Energy delivered. The actual energy delivered to the DUT can vary depending on the real value of R_s. Since this is test circuit dependent, the actual energy delivered must be verified by observing the voltage across the DUT and current through the DUT waveforms (see figure 3469-1). Empirically record the $V_{(BR)}$, I_{AR}, and t_{av}. Then calculate:

EAR = 1/2 $V_{(BR)} I_{AR}\ t_{av}$ (in accordance with figure 3469-1).

If this empirically derived value is not greater than or equal to the specified minimum EAR value, the circuit must be compensated until it is.

5.3 Junction temperature. T_J during the test must be held constant to T_J(max) +0°C -10°C, based on the case temperature of the DUT and the $R_{\Theta JC}$ or the junction temperature as determined using a TSP. The power dissipated in the DUT is equal to the sum of the on energy and the avalanche energy multiplied by the frequency. The Eon in most cases can be neglected.

SO: $P_D = f * (E_{AR} + E_{on})$

$$T_J = P_D * R_{\Theta JC} + T_C$$

The case temperature of the DUT will be measured at a specified reference point under the heat source. It is also possible to measure the temperature of the heat sink at a specified reference point provided that an accurate value of the thermal resistance case-to-heat-sink-reference-point is known. The measured junction temperature based on measurements of a TSP may also be substituted for the junction temperature calculated from case temperature.

5.4 Number of pulses. The DUT will be avalanched for a specified minimum number of pulses at specified conditions. Upon completion the specified device parameters will be tested.

6. Summary. Unless otherwise specified in the detail specifications, the following parameters shall be as follows:

EAR: (Repetitive avalanche energy (joules)).

I_{AR}: (Repetitive avalanche current (amperes)).

T_J: +150°C +0°C, -10°C.

t_{av}: 2 µs minimum, 2 µs maximum.

f: 500 Hz, minimum.

N: 3.6 x 10^8 minimum number of pulses.

$$L = \left[\frac{2\ E_{AR}}{(I_{DI})^2}\right]\left[\frac{V_{BR} - V_{DD}}{V_{BR}}\right] \quad \text{nH minimum}$$

Supply voltage ±50 V

7. Failure criteria. The DUT must be within all specified parameter limits at the completion of the test. As a minimum, V_{BR} shall be greater than or equal to rated breakdown voltage and applicable leakage currents.

METHOD 3470.2

SINGLE PULSE UNCLAMPED INDUCTIVE SWITCHING

1. Purpose. This method is applicable to power MOSFET's and IGBT. For the IGBT, replace the drain and source MOSFET designations with collector and emitter IGBT designations, D = C and S = E. The purpose of this test method is to screen out weak devices which otherwise may result in costly equipment failures. This is accomplished by providing a controlled means of testing the capability of a power MOSFET or IGBT to withstand avalanche breakdown while turning off with an unclamped inductive load under specified conditions. The device capability is a strong function of the peak drain current at turn-off and the circuit inductance. Since no voltage clamping circuits or devices are employed, essentially, all of the energy stored in the inductor must be dissipated in the OUT at turn-off. It is not the intent of this test method to closely duplicate actual application conditions where device temperatures may approach maximum rated value, repetition rates may be 10 to 100 kHz, and voltage transients are usually only a few microseconds in duration. However, experience has shown that failures in actual applications can be greatly reduced or elaminated if devices are tested for avalanche operation under defined circuit conditions at very low repetition rates and at room ambient temperature.

2. Test procedures. The specified value of inductance L shall be connected into the circuit (see figures 3470-1 and 3470-2). The gate pulse shall be applied to the device at the specified repetition rate. The V_{DD} supply voltage shall be applied. The gate pulse width shall be adjusted as necessary until the specified drain current ID is reached. Test failures are defined as those devices which fail catastrophically.

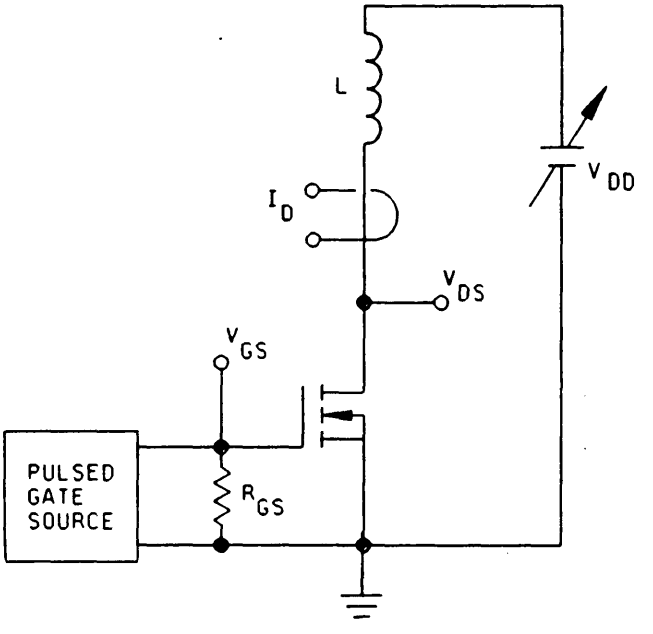

FIGURE 3470-1. Unclamped inductive switching circuit.

NOTE: The test circuit, shown for n-channel devices, is also applicable for p-channel devices with appropriate changes in polarities and symbols.

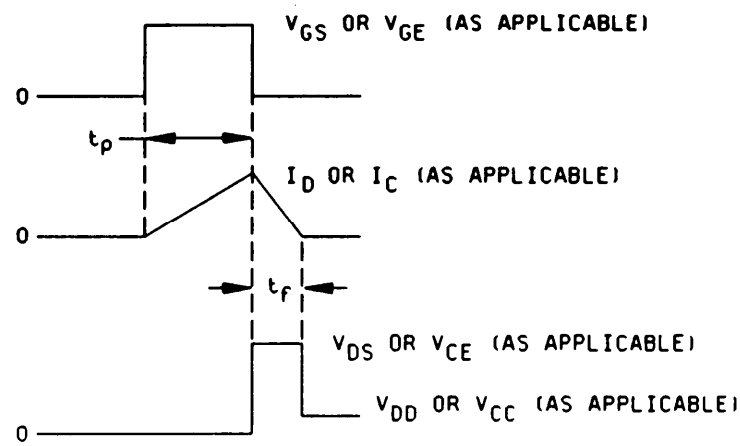

NOTES: The following notes are provided in the interest of achieving comparable results from various test circuits employed to perform this test.

a. Air core inductors are recommended for this test to avoid the possibility of core problems. If iron core inductors are used, care must be taken such that core saturation is not changing the effective value to the inductance L which will lead to non-repeatable test results.

b. The resistance of the inductor must be controlled since I^2R losses in the inductor will decrease the percentage of $LI^2/2$ stored energy transferred to the DUT. The relationship $R = 0.015\ (V_{DS}/I_D)$ applies for one percent of the stored energy being dissipated in the resistance. For two percent loss, $R = 2\ (.015)\ (V_{DS}/I_D)$ or (V_{CE}/I_C). The resistance loss shall be limited to two percent maximum, if not compensated by the equipment.

c. The gate to source resistor shall be closely connected to the test device. The gate to source resistor shall be a low enough value that the switching performance of the device does not affect the test and the inductor in the drain circuit determine the current waveform. The design of the pulsed gate source must be such that R_{GS} or R_{GE} is the effective gate-to source resistance during the t_f portion of the test.

d. The repetition rate and duty cycle of the test shall be chosen so that device average junction temperature rise is minimal. Limits of one pulse per second or 0.5 percent duty cycle are recommended. The device peak junction temperature shall not exceed maximum rated value.

e. If the V_{DD} or V_{CF} power supply remains in series with the inductor during the t_f interval then the energy transferred to the DUT may be considerably higher than $LI^2/2$. If the gate pulse width is adjusted so that V_{CC} or $V_{DD} < 0.1\ V_{DS}$ or V_{CE} then the contribution of the power supply will be less than 10 percent of the stored $LI^2/2$ energy.

FIGURE 3470-2. Unclamped inductive switching power pulse.

3. Summary. The following conditions shall be specified in the detail specification:

a. Minimum peak current (I_D).

b. Peak gate voltage (V_{GS}).

c. Unless otherwise specified, gate to source resistor (R_{GS}) = 25 Ω to 50Ω. .

d. Initial case temperature (T_c).

e. Inductance (L).

f. V_{DD}.

METHOD 3471.1

GATE CHARGE

1. Purpose. The purpose of this test is to measure the gate charge (Q_g) of power MOSFET's and IGBT. For the IGBT, replace the drain and source MOSFET designations with collector and emitter IGBT designations, D = Canal S = E.

1.1 Definitions.

a. Test 1: $Q_{g(th)}$ is the gate charge that must be supplied to reach the minimum specified gate-source threshold voltage. It establishes line loci through the origin of a $Q = f(V_{gs})$ graph that is invariant with I_D, V_{DD}, and T_J. It establishes a relationship with capacitance (i.e.,

$$C_{GS} = \frac{Q_{g(th)}}{V_{g(th)}} = \frac{Q_{gs}}{V_{GP}} \text{).}$$

b. Test 2: $Q_{g(on)}$ is the gate charge that must be supplied to reach the gate-source voltage specified for the device $r_{DS(on)}$ measurement.

c. Test 3: $Q_{gm(on)}$ is the gate charge that must be supplied to the device to reach the maximum rated gate-source voltage. $Q_{gm(on)}$ and $Q_{g(on)}$ establish line loci on a $Q = f(V_{gs})$ graph that may be considered invariant with I_D and T_J. The slope of the loci is invariant with V_{DD}, while the intercept with the Q axis is variant with V_{DD}.

d. Test 4: V_{GP} is the gate voltage necessary to support a specified drain current. V_{GP}, I_D is a point on the device gate voltage, drain current transfer characteristic. V_{GP} is variant with I_D and T_J. It may be measured one of two ways:

(1) Using a dc parameter test set employing a circuit similar to that described in method 3474 for SOA setting $V_{DD} >> V_{GS}$.

(2) Using a gate charge test circuit employing a constant I_D drain load.

e. Test 5: Q_{gs} is the charge required by C_{GS} to reach a specified I_D. It is variant with I_D and T_J. It is measured in a gate charge test circuit employing a constant drain current load.

f. Test 6: Q_{gd} is the charge supplied to the drain from the gate to change the drain voltage under constant drain current conditions. It is variant with V_{DD} and may be considered invariant with I_D and T_J. It can be related to an effective gate-drain Capacitance (i.e., $C_{rss} = Q_{gd}/V_{DD}$). The effective input capacitance is: $C_{iss} = C_{GS} + C_{rss}$.

2 Test. procedure.

a. The gate charge test is performed by driving the device gate with a constant current and measuring the resulting gate source voltage response. Constant gate current scales the gate source voltage, a function of time, to a function of coulombs. The value of gate current is chosen so that the device on-state is of the order of 100 µs. The resulting gate-source voltage waveform is nonlinear and is representative of device behavior in the low to mid-frequency ranges. The slope of the generated response reflects the active device capacitance ($C_g = dQ_g/dv_{GS}$) as it varies during the switching transition. The input characteristic obtained from this test reflects the chip design while avoiding high frequency effects.

b. Figure 3471-1 is the test circuit schematic for testing an n-channel device. Polarities are simply reversed for a p-channel device.

c. Figure 3471-2 is an example of a practical embodiment of figure 3471-1. It illustrates a gate drive and instrument circuit that will test n- and p-channel devices.

d. The circuit has I_g programmability ranging from microamperes to milliamperes. For very large power MOSFET devices, the output I_g can be extended to tens of milliamperes by paralleling additional CA3280 devices.

e. The circuit provides an independent gate voltage clamp control to prevent voltage excursions from exceeding test device gate voltage ratings.

f. The CA3240E follower ensures that the smallest power devices will not be loaded by the oscilloscope. (R_{in}= 1.5 T Ω, I_{IN} = 10 pA, C_{IN} = 4 pF).

g. Gate charge is to be measured starting at zero gate voltage to a specified gate voltage value.

h. The magnitude of input step constant gate current I_g should be such that gate propagation and inductive effects are not evident. Typically this means the device on-state should be of the order of loops.

i. The dynamic response, source impedance, and duty factor of the pulsed gate current generator are to be such that they do not materially affect the measurement.

j. Typically, the instrument used for a gate charge measurement is an oscilloscope with an input amplifier and probe. The switching response and probe impedance are to be such that they do not materially affect the measurement. Too low a probe resistance relative to the magnitude of 1_g can significantly increase the apparent Q_g for a given V_{GS}. Too high a value of probe capacitance relative to the device C_{iss} will also increase the apparent Q_g for a given V_{GS}.

$$I_g = \frac{C_g\, dV_{GS}}{dt},\ Q_g = C_g\, V_{GS}.$$

3. Summary. Figure 3471-3 illustrates the waveform and tests 1 through 4, condition A. Figure 3471-4 illustrates the waveform for tests 2, 4, 5, and 6, condition B. Only four of the six tests need be performed since the results of the remaining two are uniquely determined and may be calculated. Either condition A or condition B may be used.

3.1 Condition A.

3.1.1 Test 1, $Q_{g(th)}$.

a. Case temperature (T_c): +25°C.

b. Drain current: $I_D \geq 100$ mA.

c. Off-state drain voltage (V_{DD}): Equal to 50 percent of the device rated drain-source breakdown voltage.

d. Load resistor (R_L): Equal to V_{DD}/I_D.

e. Gate current (I_g): Constant gate current such that the transition from off-state to on-state is of the order of 50 µs. The value of I_g varies with die size and ranges from 0.1 MA to 3 mA.

f. Gate to source voltage ($V_{g(th)}$ min): The minimum rated gate-source threshold voltage.

g. Minimum off-state gate charge ($Q_{g(th)}$): A minimum and maximum limit shall be specified.

3.1.2 Test 2, $Q_{g(on)}$.

a. T_c, I_D, V_{DD}, R_L, I_g: Same as test 1 in 3.1.1.

b. V_{GS}: The gate-source voltage specified for the $r_{DS(on)}$ test, $V_{(on)}$.

c. On-state gate charge ($Q_{g(on)}$): A minimum and maximum limit shall be specified.

3.1.3 Test 3, $Q_{gm(on)}$.

a. T_c, I_D, V_{DD}, R_L, Ig: Same as test 1 in 3.1.1.

b. V_{GS}: The maximum rated gate-source voltage, $V_{(MAX)}$.

c. Maximum on-state gate charge ($Q_{gm(on)}$): A minimum and maximum limit shall be specified.

3.1.4 Test 4, V_{GP}. This test is to be performed on a de parameter test set.

a. ID = The continuous rated drain current at T_c = +25°C.

b. $V_{DS} >> V_{GS}$. Normally $V_{DD} \approx 3\ V_{GS}$ is satisfactory.

c. The pulse width and duty factor are such that they do not materially affect the measurement.

d. V_{GP} shall be specified as a maximum and minimum.

e. T_c = +25°C.

3.1.5 Test 5, Q_{gs}; test 6, Q_{gd}. No tests are required. The calculations in terms of the results of tests 1 through 4 are as follows:

a. $$Q_{gs} = Q_{g(th)} \left[\frac{V_{GP}}{V_{g(th)\ min}} \right].$$

b. Determine the fully on-state charge scope:

$$m = \left[\frac{V_{(max)} - V_{(on)}}{Q_{gm(on)} - Q_{g(on)}} \right]$$

c. Determine the V_{gs} axis intercept:

$$b = V_{(on)} - m\ Q_{g(on)}.$$

d. Calculate Q_{gd}: $$Q_{gd} = \left[\frac{(V_{GP} - b)}{m} \right] - Q_{gs}.$$

3.2 Condition B.

3.2.1 Test 2, $Q_{g(on)}$.

a. Case temperature (T_c): +25°C.

b. On-state drain current (ID): The continuous rated drain current at T_c = +25°C.

c. Off-state drain voltage (V_{DD}): Equal to 50 percent of the device rated drain-source breakdown voltage.

d. The drain load shall be such that the drain current will remain essentially constant.

e. Gate current (I_g): Same as test 1 in 3.1.1, condition A.

f. Gate to source voltage $V_{(on)}$: Same as test 1 in 3.1.1, condition A.

g. On-state gate charge ($Q_{g(on)}$): A minimum and maximum limit shall be specified.

3.2.2 Test 4, V_{GP}.

a. T_c, ID, V_{DD}, Load, I_g: Same as test 2 in 3.2.1, condition.

b. V_{GP}: This is the gate plateau voltage where Q_{gs} and Q_{gd} are measured. This voltage is essentially constant during the drain voltage transition when Q_{gd} is supplied from the gate to the drain under constant I_g, I_D conditions.

3.2.3 Test 5, Q_{gs}.

a. T_c, I_D, V_{DD}, Load, I_g: Same as test 2 in 3.2.1, condition B.

b. V_{GS}: Equal to V_{GP} at the specified I_D.

c. Q_{gs}: A minimum and maximum limit shall be specified.

3.2.4 Test 6, Q_{gd}

a. T_c, I_D, V_{DD}, Load, 1_g: Same as test 2 in 3.2.1, condition B.

b. V_{GS}: Equal to V_{GP} at the Specified I_D.

c. Q_{gs}: A minimum and maximum limit shall be specified.

3.2.5 Test 1, $Q_{g(th)}$; test 3, $Q_{gm(on)}$. No tests are required. The calculations in terms of the results of tests 2, 4, 5, and 6 are as follows:

a. $$Q_{g(th)} = Q_{gs}\left[\frac{V_{g(th)}\min}{V_{GP}}\right].$$

b. Determine the fully on-state charge slope:

$$m = \left[\frac{V_{(on)} - V_{GP}}{Q_{g(on)} - Q_{gs} - Q_{gd}}\right]$$

c. Determine the V_{gs} axis intercept:

$$b = V_{(on)} - m\,Q_{g(on)}.$$

d. Calculate $Q_{gm(on)}$:

$$Q_{gm(on)} = \frac{[V_{(max)} - b]}{m}$$

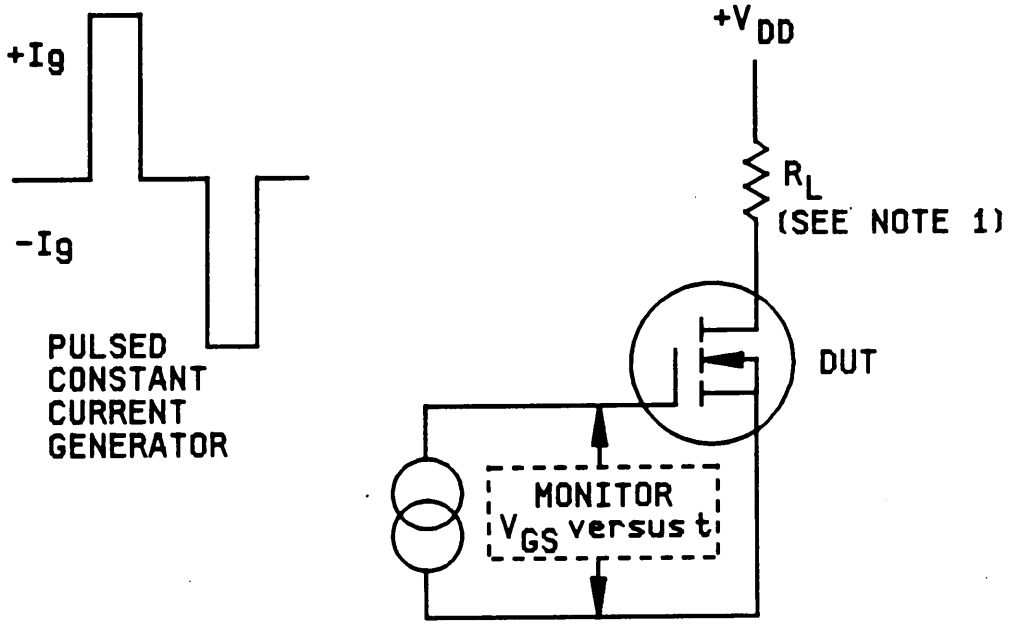

NOTES:
1. Condition B requires a constant drain current regulator.
2. $I_g \times t = Q_g$.

FIGURE 3471-1. Pulsed constant current generator.

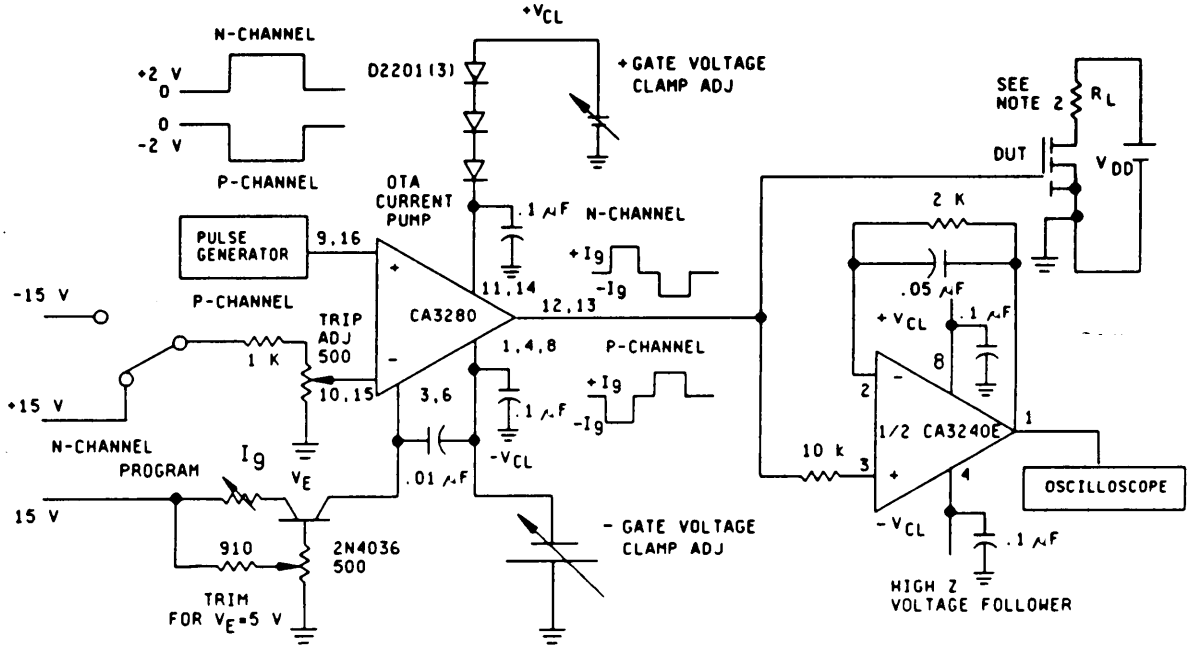

NOTES:

1. This test method provides gate voltage as a monotonic function of gate charge. Charge or capacitance may be unambiguously specified at any gate voltage. Gate voltage assuring that the device is well into the on-state will result in very reproducible measurements. For a given device, the gate charges at these voltages are independent of drain current and a weak function of the off-state voltage.
2. Condition B requires a constant current drain regulator.

FIGURE 3471-2. Practical gate charge test circuit.

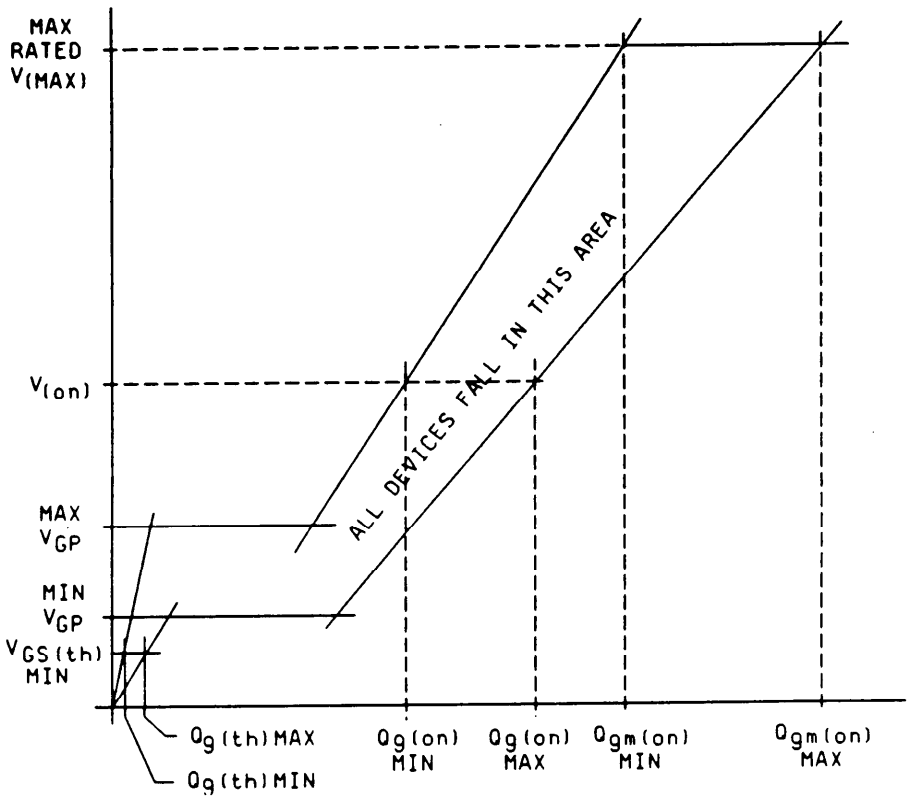

NOTES:

1. $Q_g = I_g t$.
2. V_{GP} is measured by a dc test, same I_D, $V_{DS} >> V_{GP}$ (see 3.14).
3. $V_{(max)}$ and $V_{(on)}$ are <u>specified</u> voltages for charged measurements $Q_{gm(on)}$ and $Q_{g(on)}$.
4. $V_{GS(th)}$ min is a <u>specified</u> voltage for measuring $Q_{g(th)}$.

FIGURE 3471-3. <u>Gate charge characterization showing measured characteristics.</u>

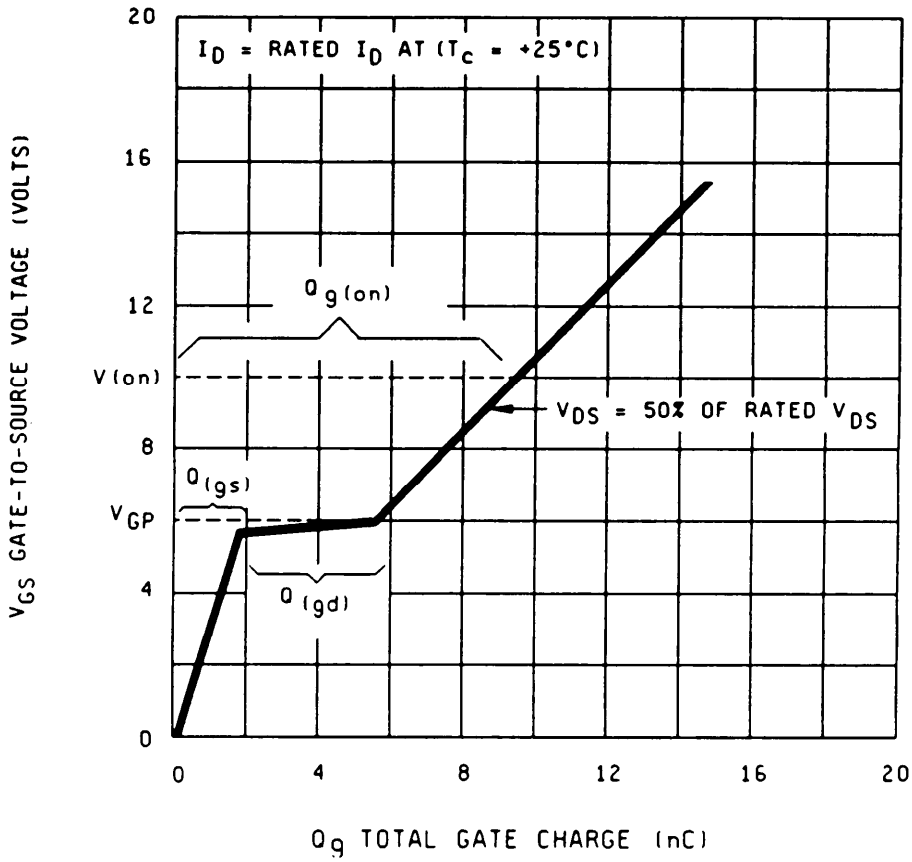

FIGURE 3471-4. Gate charge, condition B.

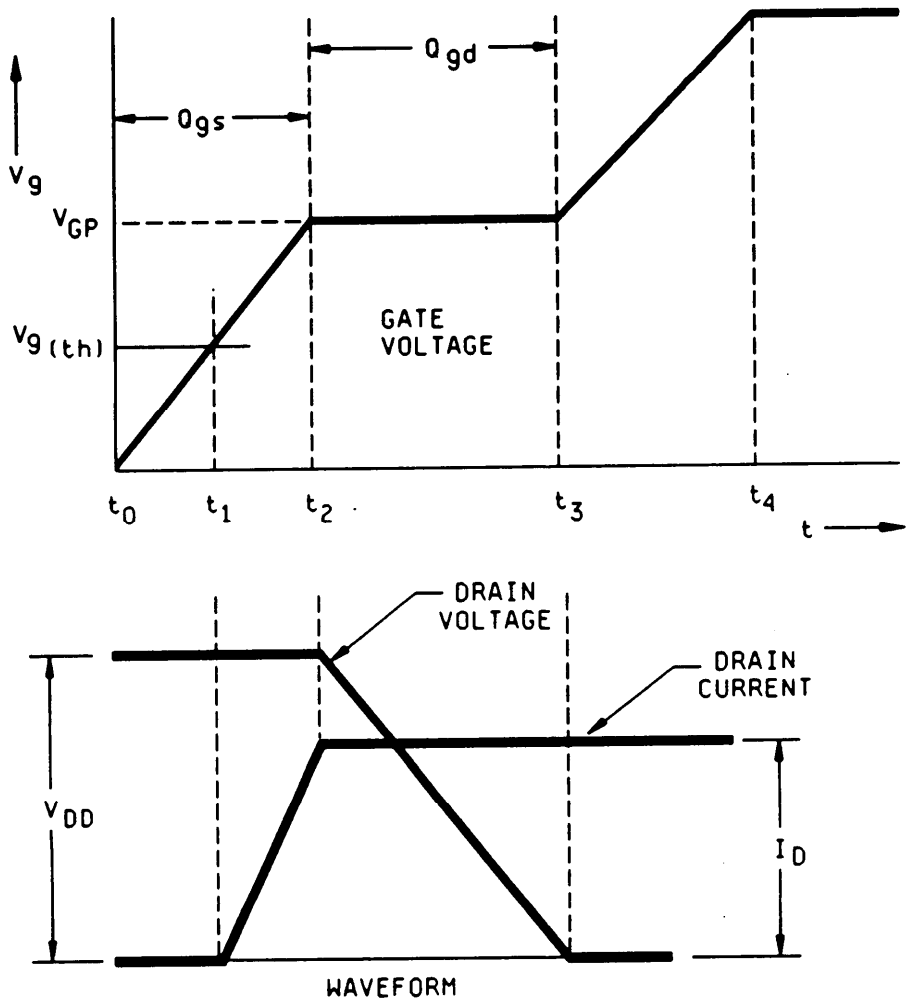

FIGURE 3471-5. Idealized gate charge waveforms, condition B.

METHOD 3472.2

SWITCHING TIME TEST

1. Purpose. The purpose of this test is to measure the pulse response ($t_{d(on)}$, t_r, $t_{d(off)}$, t_f) of power MOSFET or IGBT devices under specified conditions. For the IGBT, replace the drain and source MOSFET designations with collector and emitter IGBT designations, D = C and S = E.

2. Test procedure. Monitor V_{GS} and V_{DS} versus time using the following notes and precautions. Refer to figures 3472-1 through 3472-4 for clarification.

2.1 Notes and precautions.

a. This method presumes that good engineering practice will be employed in the physical construction of the test circuit, i.e., short leads, good ground plane, minimum gate to drain mutual inductance, and appropriate high speed generators and instruments.

b. The value of R_{GS} or R_{GE} includes instrumentation resistive loading. R_{GEN} and R_{GS} R_{GE} should be low enough in value that gate propagation effects are evident.

c. The value of L_{DST} or L_{CET}, C_{GST} or C_{GET}, and C_{DST} or C_{CET} are understood to include those of the test fixture, circuit elements, instrumentation; and any added values, exclusive of the DUT. L_{DST} or L_{CET} shall not exceed 100 nH nor shall (C_{DST} or C_{CET}) or (C_{GST} or C_{GET}) exceed 100 pF. Devices with small die may need smaller values of L_{DST} or L_{CET}, C_{DST} or C_{CET}, and C_{GST} or C_{GET}. L_{DST}, C_{DST} and C_{GST} need not be measured when using figure 3472-3 and figure 3472-4. When $r_{cs(on)}$ or $r_{DS(on)}$ is measured at a V_{GS} or V_{GE} of less than 10 V, then figure 3472-3 and figure 3472-4 do not apply.

d. Gate circuit inductance need not be specified. With the DUT removed, the gate-source voltage waveform should be free of anomalies that could materially affect the measurement. Inductance is difficult to measure accurately in a well designed test fixture. The gate drive common should be kelvin connected to the device source lead.

e. Passive circuit elements referred to in this method are lumped parameter representations whose values would be those obtained through the use of an RLC bridge using a 1 MHz test frequency.

f. Voltage and current sources are to be interpreted as effective idealizations of active elements.

g. The phrase “affect the measurement” is intended to mean that doubling a value will not affect results greater than the precision of measurement.

h. The turn-off drain voltage overshoot should not be allowed to exceed the device rated drain-source breakdown voltage. Drain circuit ringing begins when the inductive time constant is 25 percent of the capacitive time constant. Ringing is particularly serious when testing low voltage high current devices at high speeds. When the ratio $L_{DST}/R^2_L(C_{DST} + C_{OSS})$ exceeds 10, test conditions may have to be adjusted to ensure that device breakdown is not reached.

i. The instrument used for switching parameter measurement is an oscilloscope with input amplifiers and probes. The affect on rise and fall times can be estimated by the following relationship:

$$(\text{measurement rise time})^2 = (\text{actual rise time})^2 + (\text{amplifier rise time})^2 + (\text{probe rise time})^2$$

j. When two channels with probes are involved in a measurement (turn-on and turn-off delays), the relative channel probe delays should not materially affect the measurement. Simultaneous viewing the same waveform using the two channel/probes is an effective means of estimating errors.

k. Unless otherwise specified, half rated drain voltage and rated drain current are mandatory conditions for measuring switching parameters.

l. When measuring rise time, $V_{GS(on)}$ shall be as specified on the input waveform. When measuring fall time $V_{GS(off)}$ shall be specified on the input waveform. The input transition and drain voltage response detector shall have rise and fall response times such that doubling these responses will not affect the results greater than the precision of measurement. The current shall be sufficiently small so that doubling it does not affect test results greater than the precision of measurement.

3. Test circuit and waveform: See figures 3472-1, 3472-2, 3472-3, and tables 3472-1 and 3472-11.

TABLE 3472-1. Switching time circuit parts list.

Part	No.	Value or size	Manufacturer	PIN
On-board supply	1	15 volts	Datel	UPM 15/100-A
Voltage regulator	1	TO-220 package	National	LM317
Timer	1	8-pin DIP package	National	LM555
Drivers	1	50 V, Hex1, p-channel	I.R.C.	IRFD9010
	1	100 V, Hexz, n-channel	I.R.C.	IRFD1Z0
	2	50 V, Hex2, p-channel	I.R.C.	IRFD9020
	2	50 V, Hex2, n-channel	I.R.C.	IRFD020
Resistors 1/	2	4.95 KΩ, .25 W, ±1 percent	Dale	CMF604951FT0
	1	220 Ω, 0.5 W, ±1 percent	Dale	CMF602200FT0
	1	5 KΩ variable	Dale	724, 5 K, ±10 percent
	1	2.2 MΩ, .25 W, ±1 percent	Dale	CMF602204FT0
	1	360 Ω, .25 W, ±1 percent	Dale	CMF603600FT0
	1	100 Ω, .25 W, ±1 percent	Dale	CMF601000FT0
Capacitors	14	1 μF, 50 V, ±10 percent	Mallory	M30R105K5
	10	.82 μF, 600 V, ±10 percent	CRC	B55F824KXC
	7	.15 μF, 50 V, ±10 percent	Mallory	M30R154K5
	4	.01 μF, 50 V, ±10 percent	Mallory	M10R103K5
	2	22 pF, 600 V, ±5 percent	AVX	AQ14BG220JU
	1	100 pF, 100 V, ±10 percent	Sprague	TST10
	1	100 μF, 450 V, -10 percent, +5 percent	Sprague	53D101F450JS6
	1	.01 μF, 600 V, ±5 percent	Sprague	715P10356KD3
DUT socket	1	TO-3	Loranger	3128-032-4225
BNC	3	PC board mount	Pomona Elect.	4578
Transformer	1	Torroidal core	Micrometals	T5-12
Banana plugs	2	Standard uninsulated	Pomona	3267
Circuit board 2/	1	10.5" x 7.50"		

1/ All resistors are metal-film.
2/ .062 inch (1.57 mm) double-sided board with 3 ounces copper and 60/40 tin-lead of .0003 inch (0.008 mm) thickness.

TABLE 3472-2. Switching time circuit. component layout list. 1/ 2/

Label	Component	Value
R1	Resistor	220 Ω
R2	Variable resistor	5 kΩ
R3	Resistor	2.2 MΩ
R4	Resistor	360 Ω
R5	Resistor	100 Ω
R6	Gate resistor	Varies
R7	Drain resistor	Varies
C1, C2, C4, C26	Capacitor 50 V	.01 μF
C3-C10, C12, C14	Capacitor	1 μF
C16, C18, C20, C22	Capacitor	1 μF
C11, C13, C15, C17	Capacitor	.15 μF
C19, C21, C23	Capacitor	.15 μF
C25	Capacitor	100 pF
C27, C29	Capacitor	22 pF
C28	Capacitor 600 V	.01 μF
C30	Capacitor	100 μF
C31-C40	Capacitor	.82 μF
Q1	MOSFET (4 pin DIP)	IRFD9010
Q2, Q3	MOSFET (4 pin DIP)	IRFD9020
Q4	MOSFET (4 pin DIP)	IRFD120
Q5, Q6	MOSFET (4 pin DIP)	IRFD020
Q7	Regulator (TO220)	LM317
Q8	Timer (8-pin DIP)	LM555
T1	Iso. transformer	T5-12

1/ Figure 3472-3 board layout is an artist's view for an n-channel TO-3 package. The following companies will provide the circuit boards or a drawing of the exact board layout for a TO-3 as well as other packages such as the TO-39, TO-61, and TO-66:

a. Integrated Technology Corporation
1228 N. Stadem Drive
Tempe, AZ 85281

b. TEC
9800 Vesper Avenue
Unit 28
Panorama City, CA 91402

2/ L_{DST}, C_{DST}, and C_{GST} need not be measured when using these circuit boards derived from figures 3472-3 and 3472-4.

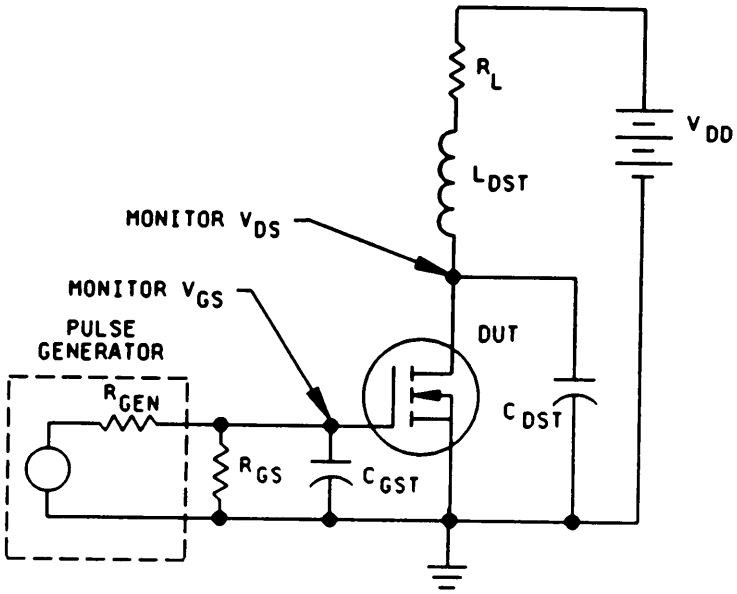

FIGURE 3472-1. Switching time test circuit.

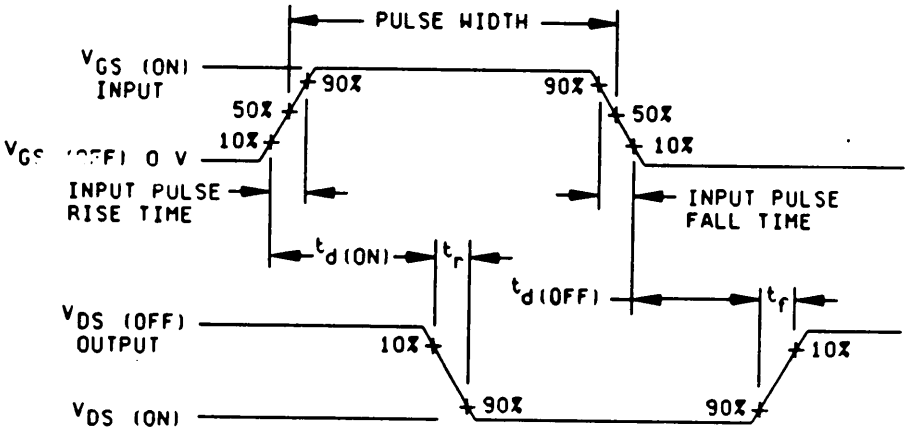

FIGURE 3472-2. Switching time waveforms.

TOP LAYER

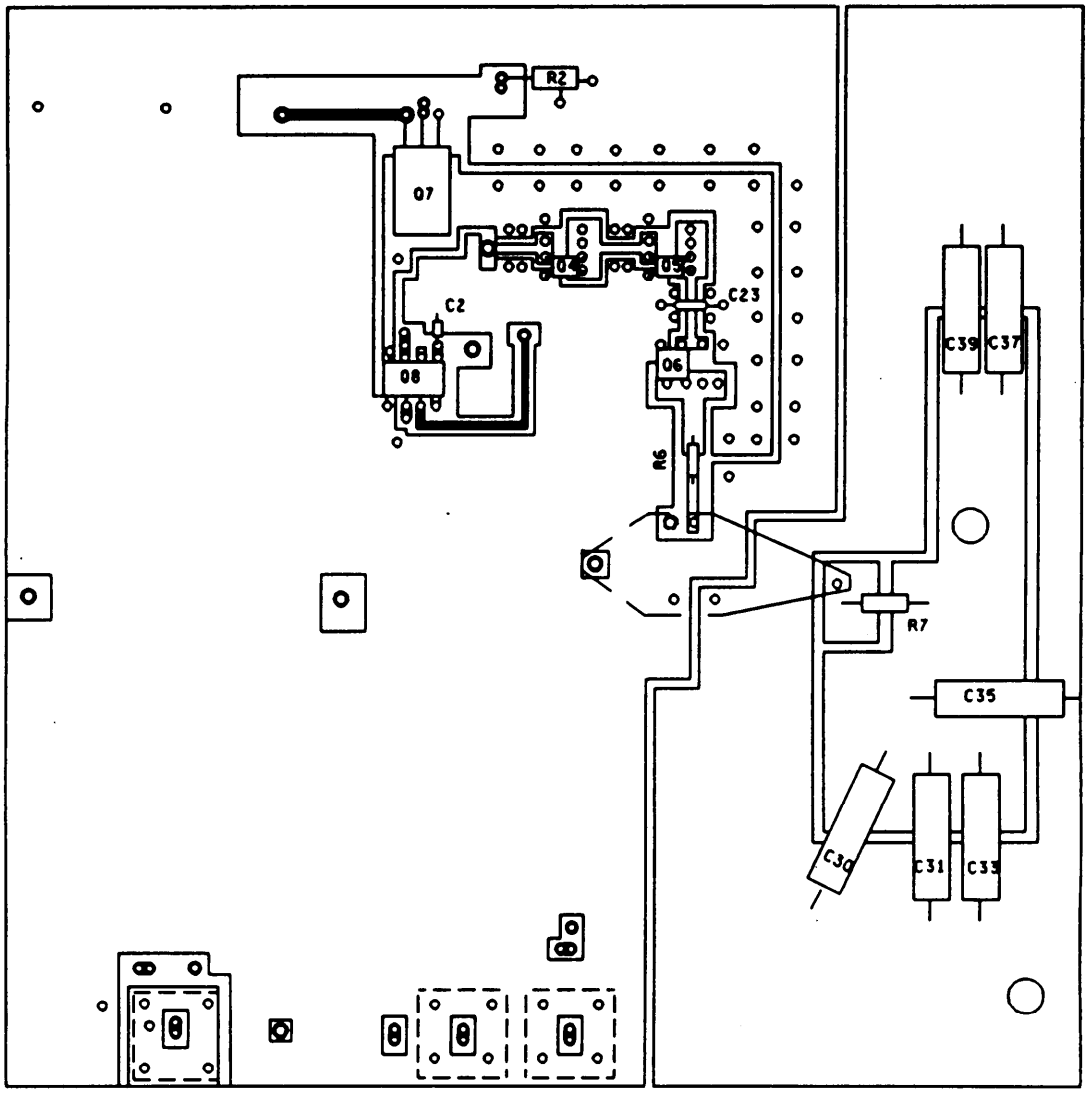

FIGURE 3472-3. Board layout.

BOTTOM LAYER

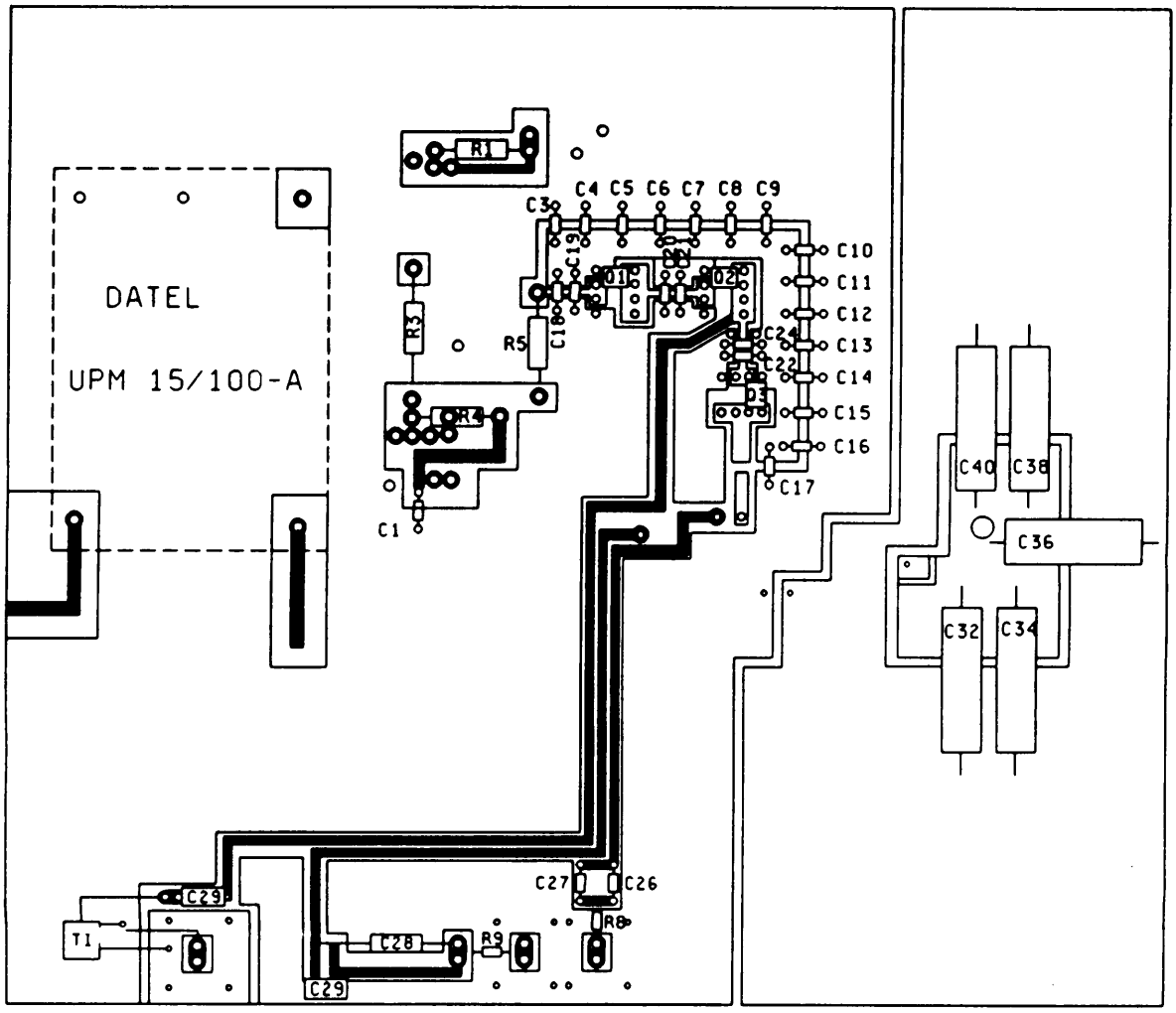

FIGURE 3472-3. Board layout - Continued.

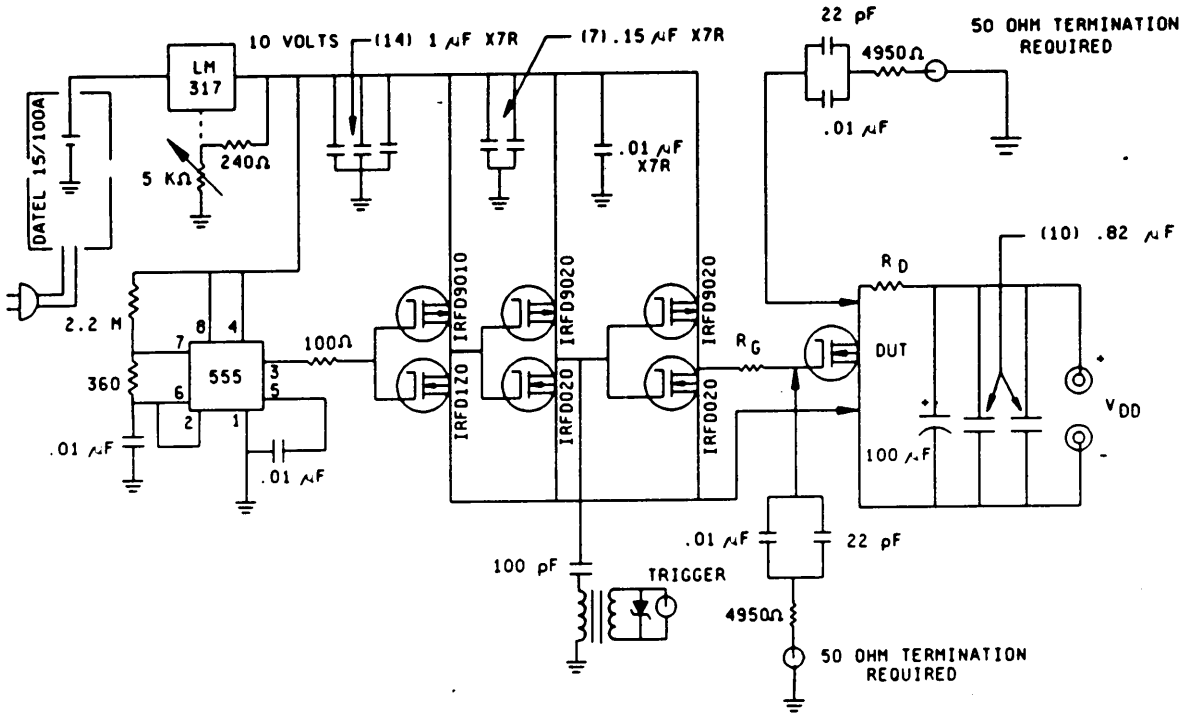

FIGURE 3472-4. Stand alone switching circuit.

4. Summary. The following conditions shall be specified in the detail specification:

a. T_C: Unless otherwise specified, case temperature = +25°C.

b. ID: On-state drain current (see 4.1.a.).

c. V_{DD}: Off-state drain voltage (see 4.1.a. and 4.1.b.).

d. R_L: Nominally equal to V_{DD}/I_D (see 4.1.b.).

e. V_{GS}: On-state gate voltage (see 4.1.c.).

f. R_{GS}: Gate to source resistance.

g. R_{GEN}: Resistance looking back into the generator.

METHOD 3473.1

REVERSE RECOVERY TIME (t_{rr}) AND RECOVERED CHARGE (Q_{rr}) FOR POWER MOSFET (DRAIN-TO-SOURCE) AND POWER RECTIFIERS WITH $t_{rr} \leq 100$ ns

1. Purpose. The purpose of this test is to swicth is to determine the time required for the DUT to switch off when a reverse bias is applied after the DUT has been forward biased and to determine the charge recovered under the same conditions.

2. Test conditions.

2.1 Test condition A, reverse recovery time (t_{rr}). Monitor diode current versus time. If the DUT is a power MOSFET, the gate lead must be shorted to the source lead. Use the following notes and precautions as a guide. Refer to figures 3473-1 through 3473-3 for clarification.

2.1.1 Notes and precautions.

a. This method presumes that good engineering practice will be employed in the construction of the test circuit, i.e., short leads, good ground plane, minimum inductance of the measuring loop, and minimum self-inductance (L_1) of the current sampling resistor (R_4). Also, appropriate high speed generators and instruments.

b. The measuring-loop inductance (L_{LOOP}, see figure 3473-1) represents the net effect of all inductive elements, whether lumped or distributed, i.e., bonding wires, test fixture, circuit board foil, inductance of energy storage capacitors. The value of L_{LOOP} should be 100 nH or less. The reason for controlling this circuit parameter is that it, combined with diode characteristics, determines the value of t_b.

c. The turn-off reverse-voltage overshoot shall not be allowed to exceed the device rated breakdown voltage. Ringing and overshoot may become a problem with $R_{LOOP} < 2(L/C)^{1/2}$; where $L = L_{LOOP}$. That is another reason for minimizing L_{LOOP}.

d. Regarding breakdown voltage, $-V_4$ should be kept as specified.

e. The self-inductance of the current-sample resistor R_4 (see figure 3473-1) must be kept low relative to t_a because the observed values of t_a and I_{RM} increase with increasing self-inductance. Since the value of R_4 is not specified, the recommended maximum inductance is expressed as a time constant (L_1/R_4) with a maximum value of t_a(minimum)/10, where t_a(minimum) is the lowest t_a value to be measured. This ratio was chosen as a practical compromise and would yield an observed t_a which is 10 percent high ($\Delta t_a = L_1/R_4$). The I_{RM} error is a function of the L_1/R_4 time constant and di/dt. For a di/dt of 100A/µs the observed I_{RM} would also be 10 percent high. $\Delta I_{RM} = L_1/R_4\, di/dt$.

f. The di/dt of 100A/µs was chosen so as to provide reasonably high signal levels and still not introduce the large I_{RM} errors caused by higher di/dt.

g. The forward current (IF) used for this test shall be as specified at T = +25°C.

h. The values of t_a, t_b, and I_{RM} are to be measured and recorded separately. $t_{rr} = t_a + t_b$.

i. The forward current value must be specified, otherwise the t_a and I_{RM} values have little useful meaning.

j. The forward current generator consisting of Q_1, Q_2, R_1, and R_2 may be replaced with any functionally equivalent circuit. Likewise the current-ramp generator consisting of Q_3, Q_4, R_3, and C_1.

2.2 Condition B, reverse recovered charge (Q_{rr}). This method is direct reading and therefore does not require an oscilloscope. Use the following notes and precautions as a guide. Refer to figures 3473-4 and 3473-5 for clarification.

2.2.1 Notes and precautions.

a. This method presumes that good engineering practice will be employed in the construction of the test circuit, i.e., short leads, good ground plane, minimum inductance of the measuring loop. Also, appropriate high speed generators and instruments.

b. The measuring-loop inductance (L_{LOOP}, see figure 3473-4) represents the net affect of all inductive elements in the loop, whether lumped or distributed, i.e., OUT bonding wires, test fixture, circuit board foil, inductive component of energy storage capacitors. The value of L_{LOOP} should be 100 nH or less.

c. The turn-off reverse-voltage overshoot shall not be allowed to exceed the device rated breakdown voltage. Ringing and overshoot may become a problem when $R_{LOOP} < 2(L/C)^{1/2}$; where $L = L_{LOOP}$.

d. Regarding breakdown voltage, $-V_4$ should be kept as specified.

e. The di/dt of 100A/µs was chosen as a compromise between having reasonably high signal levels for the faster devices and the need to keep the reverse voltage as low as possible. Higher di/dt requires a higher reverse voltage to overcome the drop across L_{LOOP}.

f. The forward current (IF) used for this test shall be as specified at +25°C.

g. The capacitor C_2 (see figure 3473-4) shall be large enough so that there IS no appreciable voltage drop across it. Reducing its value by 50 percent shall not change the reading by more than the required measurement accuracy.

h. The current meter across C_2 should have as low a resistance as possible. Doubling the resistance shall not change the reading by more than the required measurement accuracy. A good compromise would be a digital ammeter with a full scale drop of 0.2 volt. If the reverse bias supply is 30 volts, the maximum meter potential differences is then less than one percent of supply voltage.

i. The recommended pulse repetition rate is 1 kHz ±5 percent.

j. The forward current generator consisting of Q_1, Q_2, R_1, and R_2 may be replaced by any functionally equivalent circuit. Likewise the reverse current-ramp generator consisting of Q_3, Q_4, R_3, and C_1.

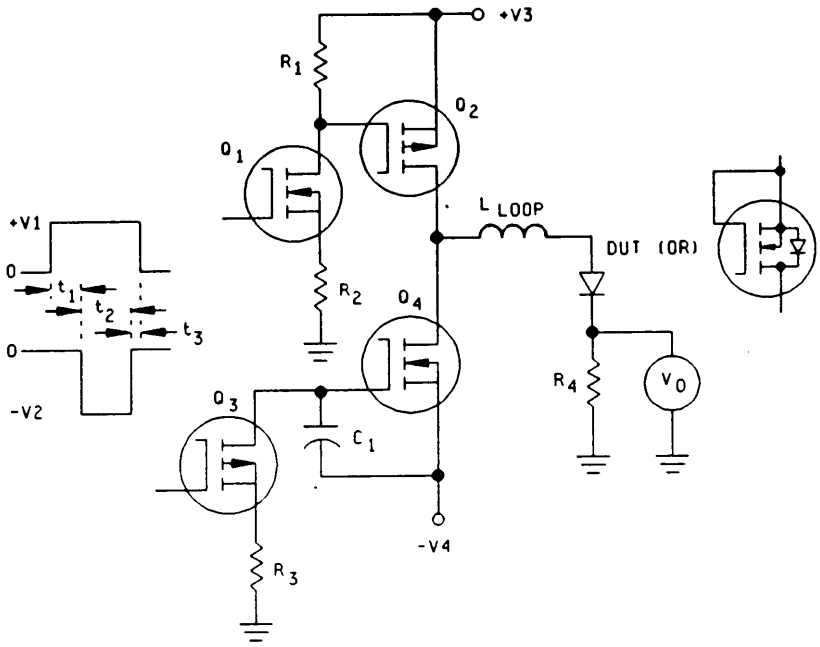

$t_1 >= 5\ t_a$ (max)
$t_2 > t_{rr}$
$t_3 > 0$
$\frac{L_1}{R4} <= \frac{t_a(min)}{10}$

NOTES:
1. V1 amplitude controls forward current (If).
2. V2 amplitude controls di/dt.
3. L_1 is self inductance of R_4.
4. t_a(max) is longest t_a to be measured.
5. t_a(rein) is shortest t_a to be measured.

FIGURE 3473-1. t_{rr} test circuit.

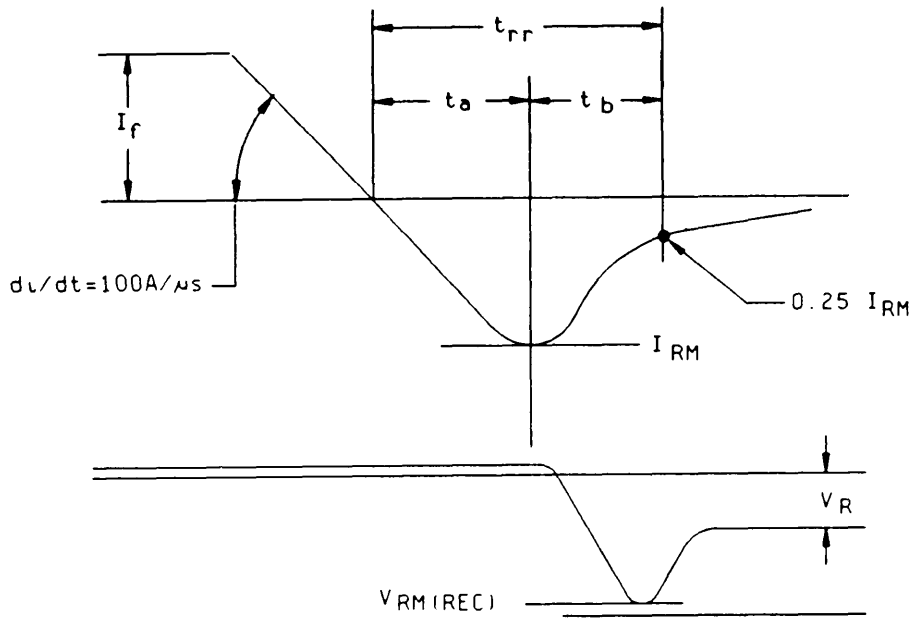

FIGURE 3473-2. Generalized reverse recovery waveforms.

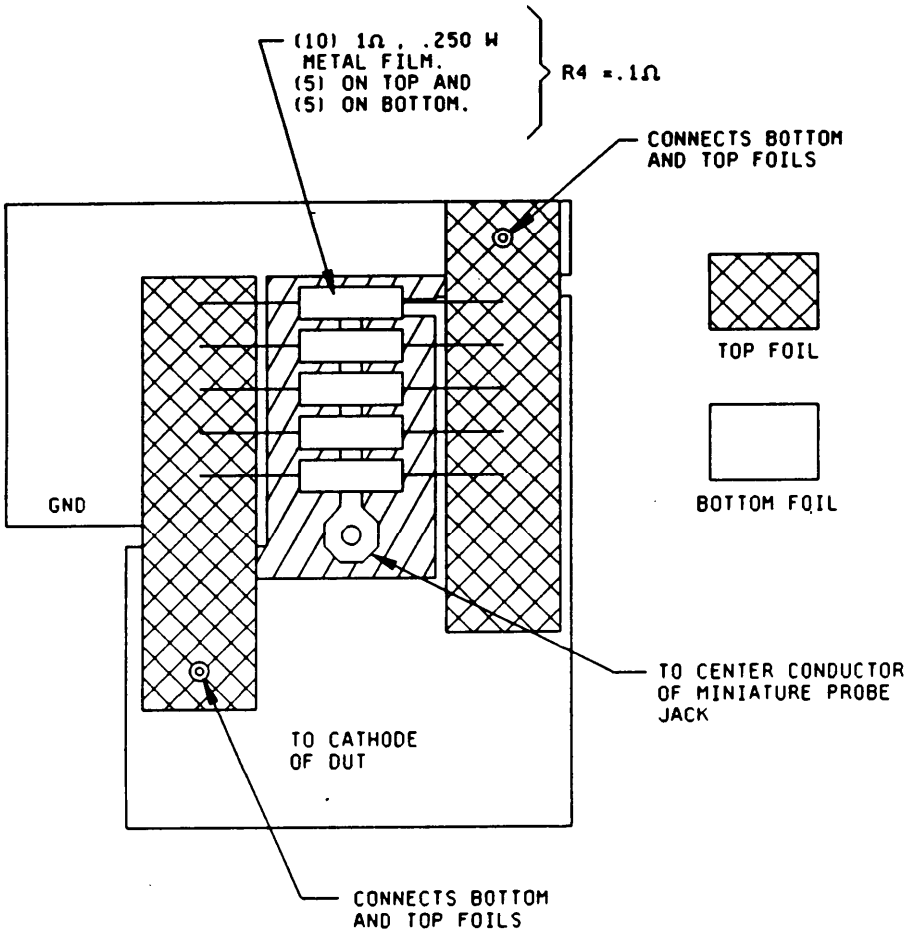

FIGURE 3473-3. Suggested board layout for low L_1/R_4.

Bottom resistor current flow is in opposite direction of top resistor current flow, providing magnetic field cancellation. Sense lead to center conductor of probe jack exits at right angle to resistor axes and is located between the resistor layers; five on top layer and five on bottom layer.

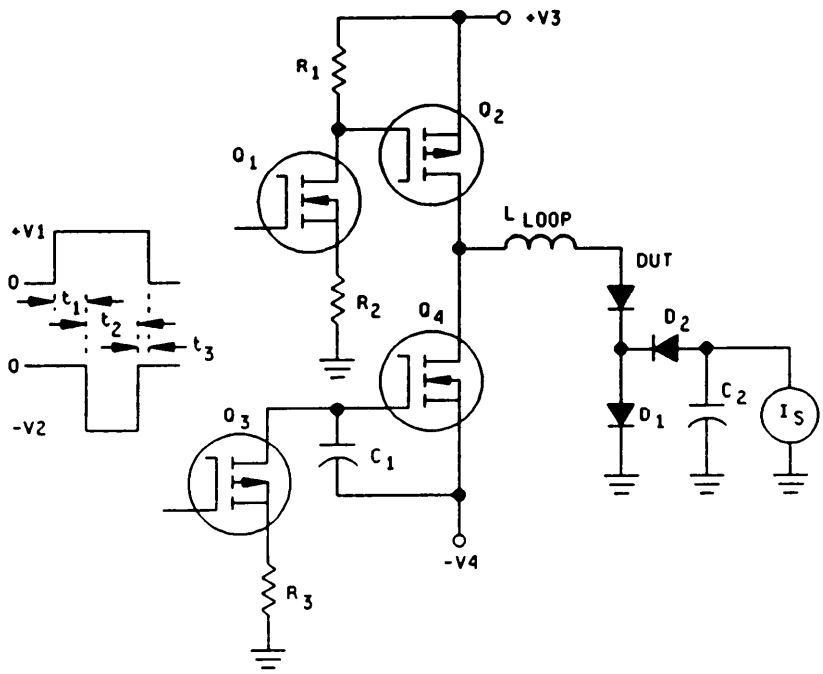

NOTES:

1. D_1 provides forward current path to ground.
2. D_2 steers reverse signal current into integrating capacitor (C_2).
3. V1 amplitude controls forward current (If).
4. V2 amplitude controls di/dt.
5. $t_1 > = 5\ t_a$(max); t_a(max) is the highest t_a to be measured.
6. $t_2 > t_{rr}$.
7. $t_3 > 0$.
8. D_1 is a low voltage Schottky rectifier.
9. 02 must have a much lower recovered charge than the value being measured.
10. Q_{rr} = is PRR; where PRR is pulse repetition rate.
11. di/dt = 100 A/µs.

FIGURE 3473-4. Q_{rr} test circuit.

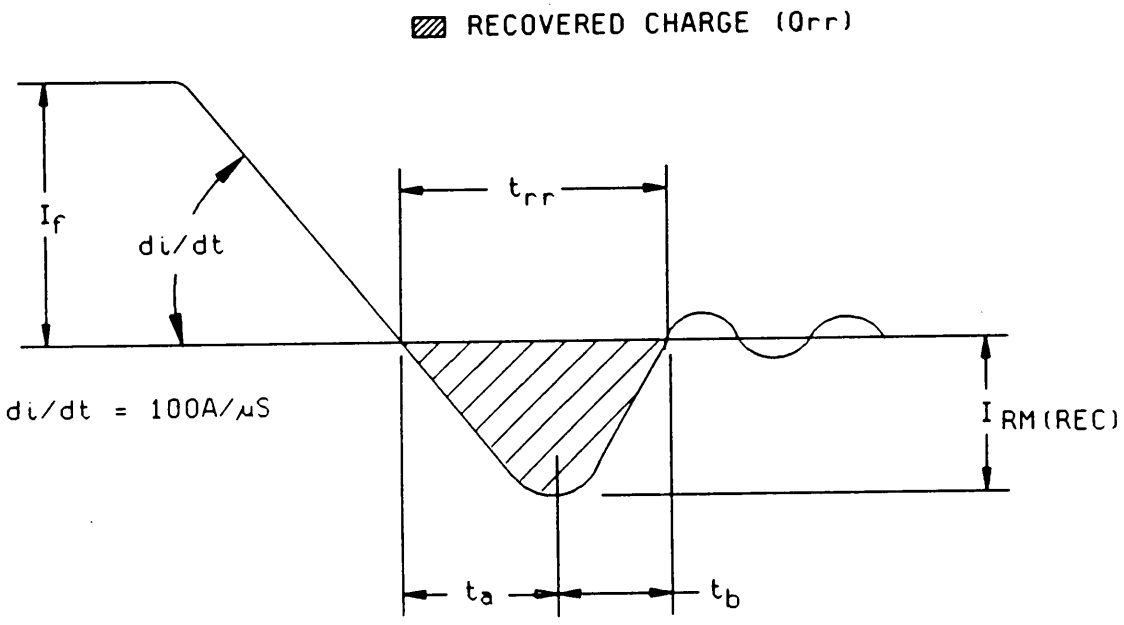

FIGURE 3473-5. Typical t_{rr} waveform (for mnemonic reference only).

3. Summary. Unless otherwise specified in the detail specification, the following conditions shall be:

a. T_c: Case temperature = +25°C.

b. I_F: As specified at +25°C.

c. di/dt: 100A/µs.

d. $-V_4$: Reverse-ramp power supply voltage.

e. V_{DD}: As specified.

METHOD 3474.1

SAFE OPERATING AREA FOR POWER MOSFET's OR INSULATED GATE BIPOLAR TRANSISTORS

1. Purpose. The purpose of this test is to verify the boundary of the SOA as constituted by the interdependency of the specified voltage, current, power, and temperature in a temperature stable circuit. Deliberate consideration is given to the problem of unavoidable case temperature rise during the test. For the IGBT, replace the drain and source MOSFET designations with collector and emitter IGBT designations, D =C and S = E.

1.1 Definitions:

a. P_D: Test power dissipation (watts).

b. D_F: Linear derating factor (W/°C).

c. I_D: Test current (amperes).

d. V_{DD}: Test power supply voltage (volts).

e. V_{DS}: Drain to source voltage (volts).

f. T_J: Junction temperature (°C).

g. T_{JM}: Maximum rated junction temperature (°C).

h. T_C: Case temperature (°C).

i. t_P: Test pulse duration (seconds).

j. P_{DM}: Maximum rated power dissipation (watts).

k. T_{CR}: Rated SOA case temperature (°C).

1. T_A: Ambient temperature (°C).

m. T_S: Heat sink temperature (°C).

n. $R_{\Theta JC}$: Junction to case thermal resistance (K/watt).

o. $R_{\Theta CS}$: Case to heat sink thermal resistance (K/watt).

p. $R_{\Theta SA}$: Heat sink to ambient thermal resistance (K/watt).

2. Test circuit. See figure 3474-1. Circuit polarities shall be reversed for p-channel devices.

a. R_S shall be a kelvin contact resistor of five percent tolerance.

b. Operational amplifier shall have a speed and accuracy such that the errors it produces will contribute less than a five percent error to the measurement.

c. Precision voltage source shall have an accuracy of five percent.

d. S1 shall have adequate speed and characteristics such that the accuracy of the measurement will not be affected by more than five percent.

e. V_{DD} shall be maintained to within five percent.

f. t_P shall be maintained to within five percent.

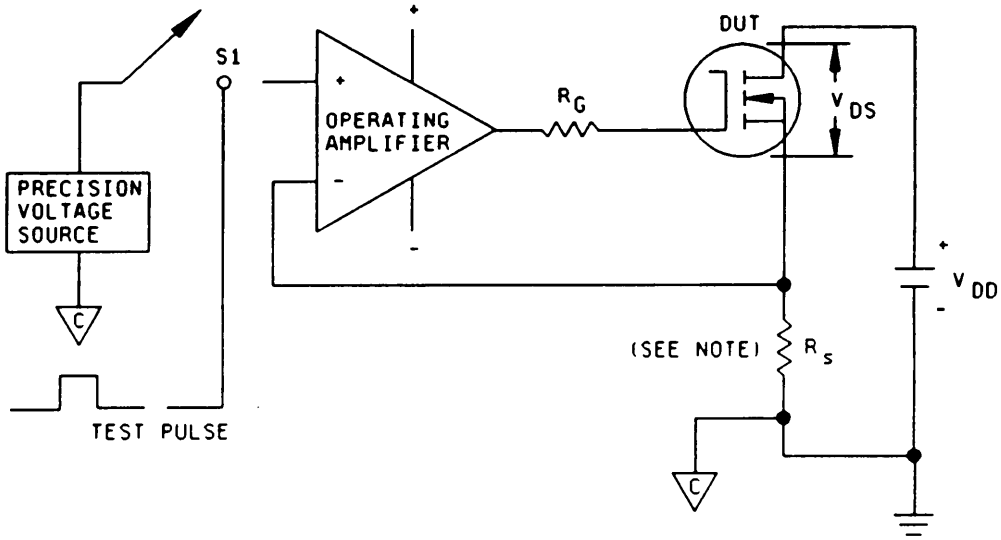

NOTE: Low inductance resistor,

FIGURE 3474-1. SOA test circuit.

g. Total test accuracy shall be maintained to within 10 percent.

h. R_G shall be selected to eliminate parasitic oscillations.

3. Procedure. Set the precision voltage source to $I_D \times R_S$. Applied V_{DD} to the circuit. Close S_1 for t_p seconds.

4. Summary. Just like in any practical application, the junction temperature during an SOA test can be calculated by adding all of the temperature drops in the system to the ambient temperature:

$R_S \leq$ (Maximum rated gate voltage) ID not to exceed (.2 x maximum rated V_{DS})/I_D

$T_J = T_A + \Delta$ sink to ambient $+ \Delta$ case to sink $+ \Delta$ junction to case

$$I_D = \frac{(P_{DM} - (T_C - T_{CR}) \times D_F)}{V_{DS}}$$

Under a controlled set of conditions, such as those that are encountered in an SOA test, the case temperature can be measured and therefore known as a constant. This simplifies the expression substantially:

$T_J = T_C + \Delta$ junction to case

$T_J = T_C + P_D \times R_{\Theta JC}$

By substituting in the maximum rated junction temperature and rearranging the terms, the maximum power dissipation for this condition can be calculated:

$$P_D \frac{(T_{JM} - T_C)}{R_{\theta JC}}$$

If a case temperature of T_{CR}°C was chosen for the purpose of specifying the device SOA, then a derating factor "D_F" can be determined:

$$D_F = \frac{P_{DM}}{(T_{JM} - T_{CR})}$$

P_{DM} can be any P_{DM} from the SOA curves for that particular device type, either dc or pulsed. The maximum power dissipation for any case temperature can now be readily calculated and used in an SOA test

$$P_D = P_{DM} - (T_C - T_{CR}) \times D_F$$

Unless otherwise specified in the detail specification, the following conditions shall apply:

a. V_{DS} = as specified.

b. I_D = as calculated above.

c. +2C°C $\leq T_C \leq$ +45°C.

d. t_p shall be that which corresponds with the SOA curve being used.

e. $D_F = \frac{P_{DM}}{(T_{JM} - T_{CR})}$

f. R_S = as calculated above.

g. P_{DM} shall be a value chosen from one of the SOA curves for that particular device either dc or pulsed.

h. $V_{DD} = V_{DS} + I_D \times R_S$.

METHOD 3475.1

FORWARD TRANSCONDUCTANCE (PULSED DC METHOD) OF POWER MOSFET's OR INSULATED GATE BIPOLAR TRANSISTORS

1. Purpose. This method establishes a basic test circuit for the purpose of establishing forward transconductance (g_{FS}) using pulsed dc for the test conditions to enable measurements above the small signal (g_{FS}) output current levels. The described method is adaptable to ATE where large ac test currents are often impractical. For the IGBT, replace the drain and source MOSFET designations with collector and emitter IGBT designations, O = C and S = E.

2. Procedure. The gate-source voltage (V_{GS1}) is applied as necessary to achieve a specified drain-source current. I_{D1} shall be five percent minimum less than the value of I_D used in specifying $r_{DS(on)}$ (normally 50 percent of rated dc current). The gate-source voltage (V_{GS1}) is then decreased to achieve a second drain-source current (I_{D2}). I_{D2} shall be five percent minimum below the I_{D1} used in specifying $r_{DS(on)}$. The drain-source voltage (V_{GS2}) shall remain equal to the value specified for establishing I_{D2}.

Calculation:

$$g_{FS} = \frac{I_{D1} - I_{D2}}{\Delta V_{GS}}$$

Where: $\Delta V_{GS} = V_{GS1} - V_{GS2}$

NOTE: ΔV_{GS} should not be set lower than 0.05 volt or test equipment accuracy can adversely effect measurement. I_{D1} and I_{D2} can be adjusted such that ΔV_{GS} is $\geq$ 0.1 volt. In all cases I_{D1} and I_{D2} should be adjusted so they are equally above and below specified current. The formula below can be used as initial reference point:

If:

$$\Delta V_{GS} = \frac{I_{D1} - I_{D2}}{G_{FS}}$$

then:

$$\frac{I_{D1} - I_{D2}}{2} = \Delta I_D \text{ desired}$$

The previous calculations can be used in establishing minimum ΔV_{GS} desired to achieve highest accuracy.

3. Test circuit. See figure 3475-1.

4. Summary. Unless otherwise specified in the detail specification, the following conditions shall apply:

a. I_{D1} = 0.5 I_D continuous at T_c = +25°C x 1.05 minimum.

b. I_{D2} = 0.5 ID continuous at T_c = +25°C x 0.95 minimum.

c. I_{DS} = 4 $r_{DS(on)}$ x 0.5 I_D Continuous or as necessary to be in the active region.

d. $\Delta V_{GS} \geq$ 0.1 volts.

e. $r_{DS(on)}$ as Specified.

f. Pulse width $\leq$ 300 ?s.

g. Unless otherwise specified, (T_c) = (Temperature of case) = +25°C.

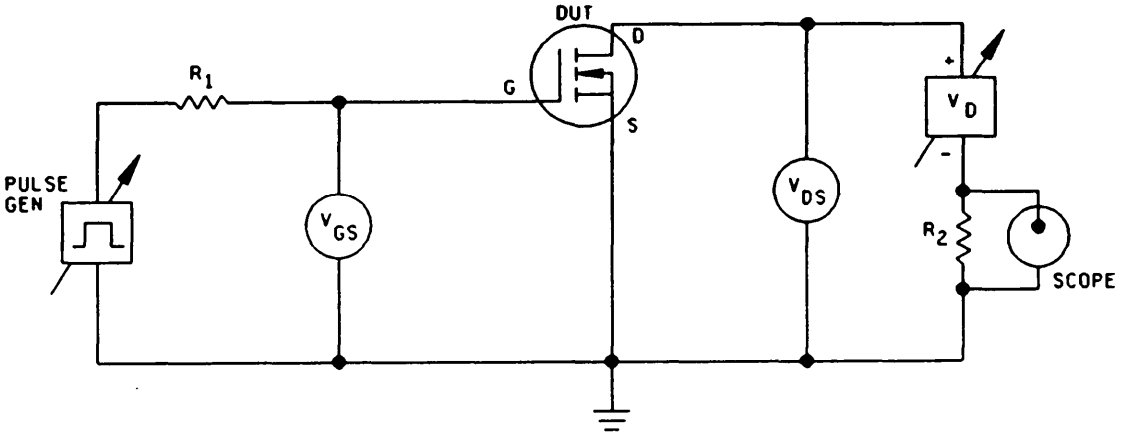

NOTES:

1. Pulse the device according to MIL-STD-750. Resistor R_1 shall be used to damp spurious oscillations that can occur (approximately 100(Ω).
2: The device used for circuit illustration is an n-channel, enhancement-mode FET. The methodology described is not limited solely to this type of device. For all other field effect devices where the power ratings are such that the dc method is the preferred method, the parameter symbols need only indicate the appropriate voltage or current polarity.
3. When performing this test on a nonheat-sinked part, the following caution is applicable. The implementation of this test requires the use of repeated incremental steps of gate voltage, while measuring drain current. The number of steps and the duration of each step result is cumulative energy which may thermally overstress the part if it is not heat-sinked. A stepped program to perform this test will result in higher power dissipation during test of a unit requiring a high gate drive voltage than during test of a unit requiring a lesser gate drive voltage.
4. R_2 is a noninductive, current sensing resistor and is normally $\leq 0.1\,\Omega$.

-FIGURE 3475-1. Forward transconductance circuit.

METHOD 3476

COMMUTATING DIODE FOR SAFE OPERATING AREA TEST PROCEDURE FOR MEASURING DV/DT DURING REVERSE RECOVERY OF POWER MOSFET TRANSISTORS OR INSULATED GATE BIPOLAR TRANSISTORS

1. Purpose. The purpose of this test method is to define a way for verifying the diode recovery stress capability of power MOSFET transistors. For the IGBT, replace the MOSFET designators for drain and source with the IGBT designators for collector and emitter, D = C and S = E. The focus is on simplicity and practicality.

2. Scope. This method covers all power transistors which have an internal diode capable of commutating current generated during reverse recovery.

3. Definitions.

a. R_G: Gate drive impedance.

b. R_{DUT}: Gate to source circuit resistance at DUT.

c. T_j: Semiconductor junction temperature.

d. V_{GEN}: Gate generator voltage (volts) for drive transistors.

e. V_{DD}: Supply voltage.

f. I_{FM}: Maximum body diode forward current.

g. Driver: A device is used in the lower portion of an "H" bridge (see figure 3476-1) and is an equivalent to the DUT.

h. $L_{(LOAD)}$: Load inductor. Shall be of a large enough value such that the decay of current during the forward conduction of the DUT is less than five percent of I_{FM}.

1. t_{rv}: Drain voltage rise time. Measured between 10 percent of V_{DD} and 90 percent of V_{DD} of the voltage waveform. Limits shall be recorded during the test and a typical value shall be contained in the detail specification.

j. t_{rr}: Reverse recovery time.

k. V_{DS}: Drain-source voltage.

l. $V_{(BR)DSS}$: Breakdown voltage drain-source.

m. I_{GSS}: Reverse gate current, drain shorted to source.

n. I_{DSS}: Zero gate voltage drain current.

o. $R_{DS(ON)}$: Static drain-source on state resistance.

4. Circuit. Basic circuitry for testing this parameter is shown on figure 3476-1. Idealized waveforms are shown on figure 3476-2. Snubbers may not be used. Stray capacitance and inductance, especially in the source of the drive transistor, must be minimized.

The basic principle of the circuit may not be altered, that is, the lower "H" bridge device must be equivalent to the DUT. The circuit may operate continuously, or, single shot, as long as the required test conditions are achieved. Gate drive to the driver may be any Thevenin equivalent of that specified.

To test continuously or single shot, the electrical sequence is almost the same.

a. Drive is turned on until current in $L_{(LOAD)}$ is higher than I_{FM}.

b. Driver is turned off until current in DUT reaches I_{FM}. The minimum time for DUT forward conduction is 5 µs, or, 10 times the rated maximum t_{rr}, whichever is greater.

c. If testing "repetitively" then go back to step 1. Else, driver is turned on for the reverse recovery period of the device plus a minimum additional one microsecond. The DUT shall be monitored for V_{DS} collapse during this additional time period, and gate drive to the driver transistor may be removed at any time a failure is encountered.

If the device operates with a low repetition rate, the device may not be exposed to sufficient energy to cause a catastrophic failure. The circuit must be equipped to either cause catastrophic failure or generate a failure signal in the event of a collapse of V_{DS} during voltage recovery.

5. Specification details. The specification may take the form of a single point tabular specification, a graphical representation, or both. Ideally, a device will have both. This will allow for easy comparison of devices with the tabular specification, but still have the detail of the graph available to the designer.

a. A tabular specification will define a single point of operation. The following must be specified in the detail specification:

1.	R_G Gate drive impedance	_____	Ω
2.	V_{GEN} Gate generated voltage	_____	V
3.	I_{FM} Maximum forward current	_____	A
4.	V_{DD} Supply voltage	_____	V
5.	T_j Junction temperature	_____	°C
6.	dv/dt	_____	V/ns minimum

b. A graphical representation could take several different forms; for example, R_G versus I_{FM}, di/dt versus dv/dt, or I_{FM} versus V_{DS}. An example of R_G versus I_{FM} is shown on figure 3476-3.

6. Acceptance criteria. If a specification requires that this test be performed for verification of a maximum limit, then the device VDS must not collapse during or afater reverse recovery and (in addition) must pass any specified parametric limits, as a minimum $V_{(BR)DSS}$, I_{GSS}, I_{DSS}, and $R_{DS(ON)}$.

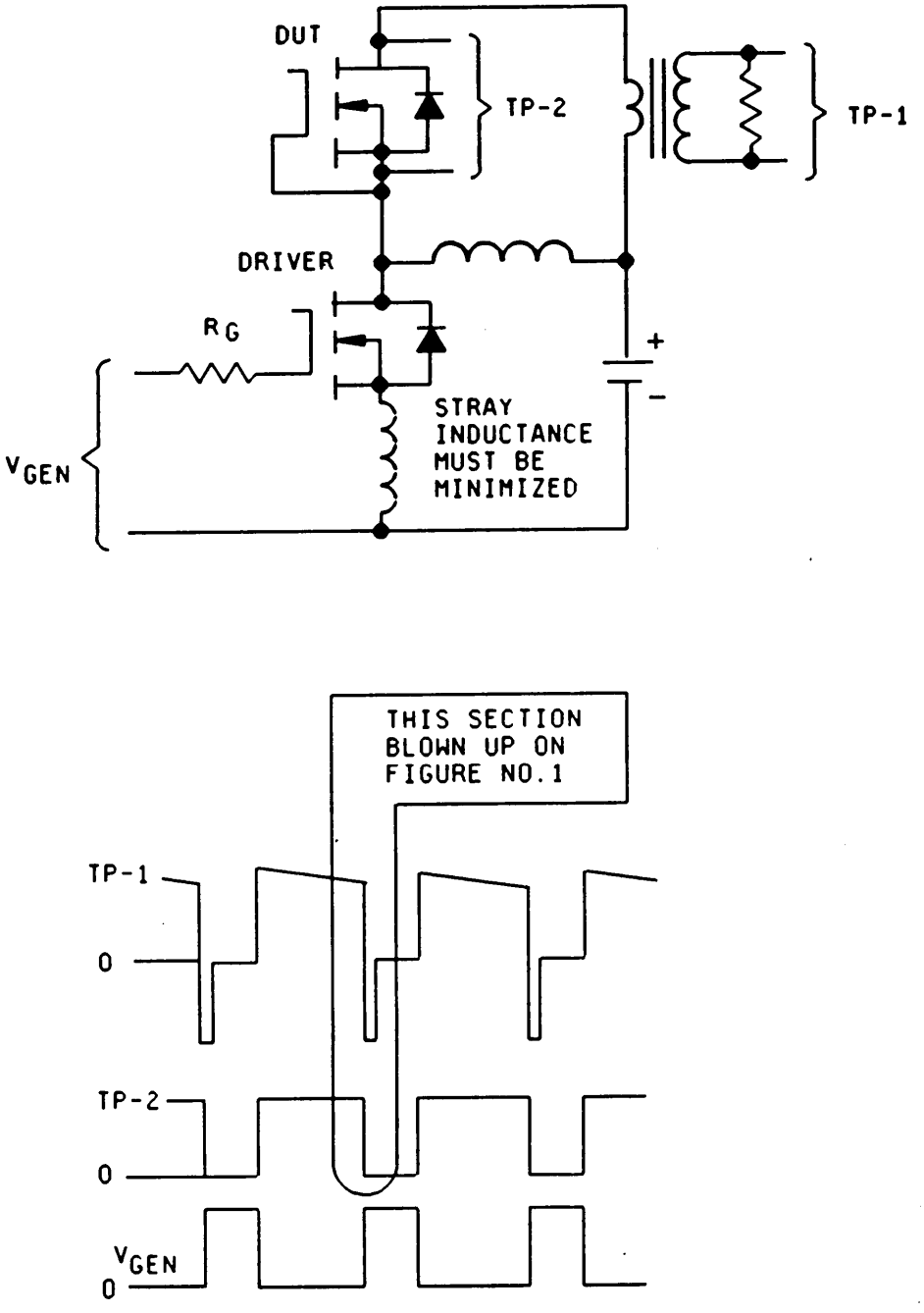

FIGURE 3476-1. Body diode test circuit.

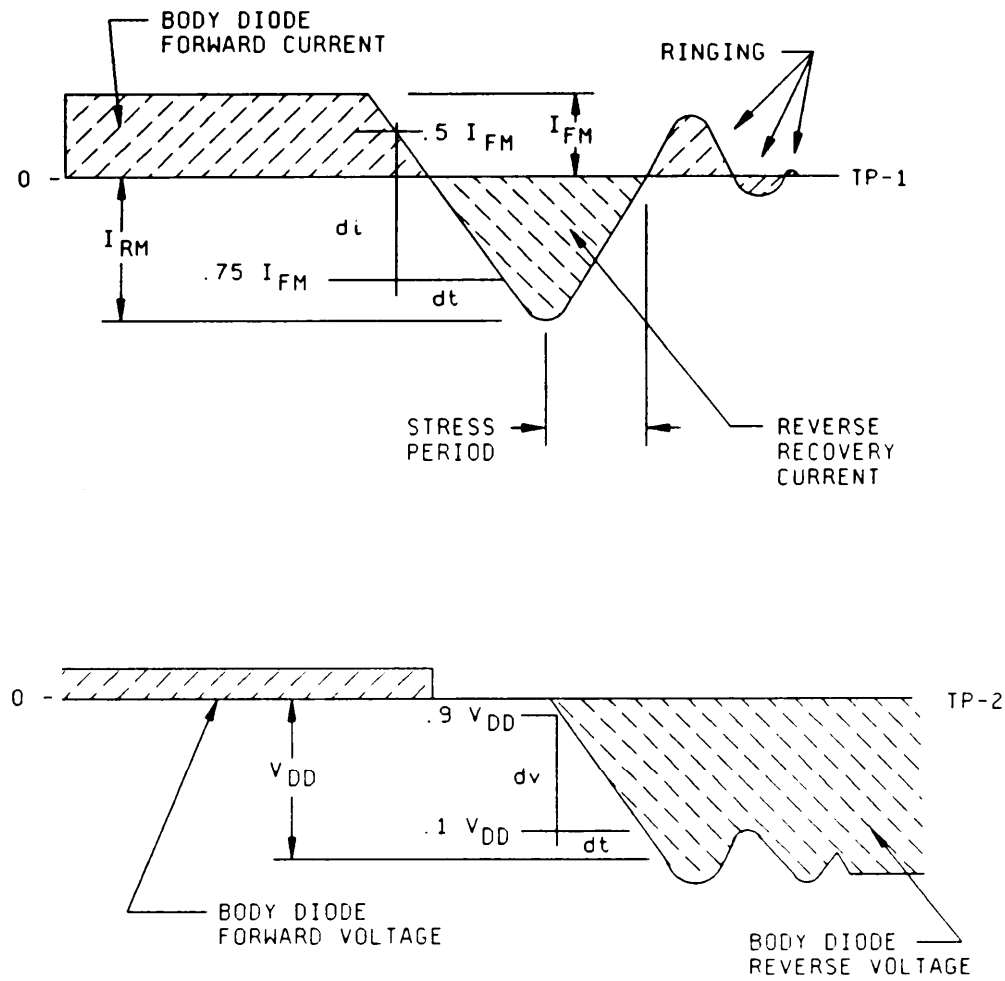

FIGURE 3476-2. Body diode waveforms.

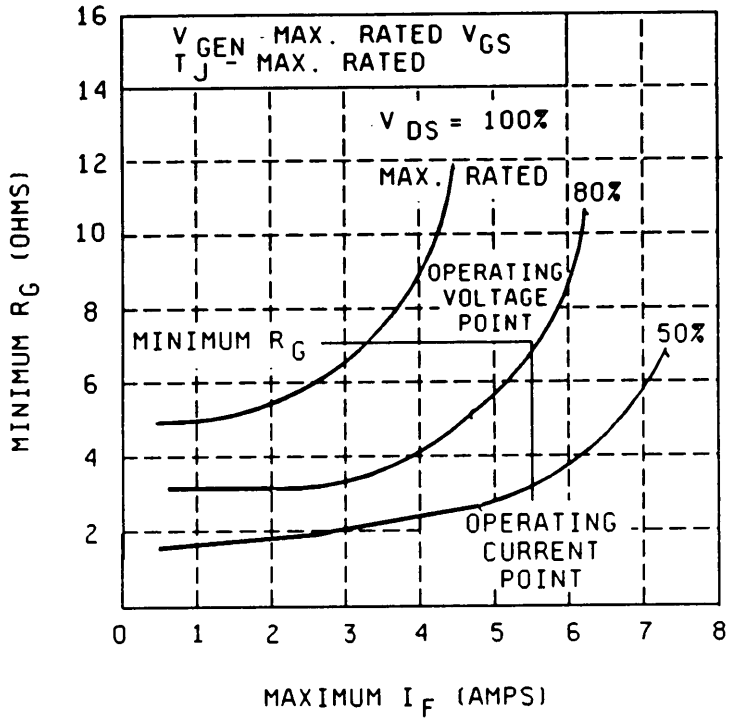

FIGURE 3476-3. Example of graphic representation.

METHOD 3477.1

MEASUREMENT OF INSULATED GATE BIPOLAR TRANSISTOR TOTAL SWITCHING LOSSES AND SWITCHING TIMES

1. Purpose. This method defines the basic test circuitry and waveform definitions by which to measure the total switching losses of an IGBT.

2. Scope. This method applies only to measurements of IGBT devices without an integral diode.

3. Definitions.

a. $V_{(BR)CES}$: Collector/emitter breakdown voltage.

b. I_{CE}: Test current.

c. V_{GE}: Gate to emitter voltage.

d. R_G: Gate drive series resistance.

e. V_{CL}: Clamp voltage (80 percent rated $V_{(BR)CES}$).

f. to: Time point where V_{CE} is at 10 percent of the specified gate drive.

g. t1: Time point where i_{CE} = 5 percent I_{CE} (maximum).

h. t2: Time point where V_{CE} = 5 percent V_{CL} when V_{CE} is decreasing.

i. t3: Time point where V_{CE} = 5 percent V_{CL} when V_{CE} is increasing.

j. t4: t3 + 5 µs.

k. $t_{d(on)}$: Turn on delay time.

l. t_r: Rise time.

m. $t_{d(off)}$: Turn off delay time.

n. t_f: Fall time.

o. W_{ON}: Turn on switching losses.

p. W_{OFF}: Turn off switching losses.

q. W_{TOT}: Total switching losses.

r. T_j: Semiconductor junction temperature.

s. V_G: Gate drive voltage.

4. Circuitry. Figure 3477-1 shows the basic test circuit. The circuit has to satisfy two fundamental requirements.

a. The circuit reflects the losses that are attributed to the IGBT only and is independent from those due to other circuit components, like the freewheeling diode.

b. The operation of the circuit shown on figure 3477-1 is as follows:

The driver IGBT builds the test current in the inductor. When it is turned off, current flows in the zener. At this point, the switching time and switching energy test begins, by turning on and off the DUT. In its switching, the DUT will see the test current that is flowing into the inductor and the voltage across the zener, without any reverse recovery component from a freewheeling diode. This test can exercise the IGBT to its full voltage and current without any spurious effect due to diode reverse recovery.

Input drive duty cycle should be chosen such that T_j is not affected. Control of T_j is best done using external methods.

5. Method. Figure 3477-2 shows the DUT current and voltage waveforms and test points.

5.1 Energy loss during turn on. During turn on, the energy loss is defined as follows:

$$(1) \quad W_{ON} = \int_{t1}^{t2} i_{CE} \cdot V_{CE}\, dt \text{ joules/pulse}$$

Refer to figure 3477-2 for t1 and t2

5.2 Energy loss during turn off. During turn off, the energy loss is defined as follows:

$$(2) \quad W_{ON} = \int_{t4}^{t3} i_{CE} \cdot V_{CE}\, dt \text{ joules/pulse}$$

Refer to figure 3477-2 for t3 and t4

5.3 Total switching loss. The total switching loss is the sum of equations (1) and (2).

$$(3) \quad W_{TOT} = W_{ON} + W_{OFF} \text{ joules/pulse}$$

5.4 Switching time measurements. Switching time measurements, while not the preferred method of delineating between devices, may be determined using the rules below and as seen on figure 3477-2.

a. $t_{d(on)}$: The interval measured from the 10 percent point of the rising input pulse V_g and the 10 percent rise of the output current XC.

b. t_r: The interval measured from the 10 percent to the 90 percent point of the rising output current I_c.

c. $t_{d(off)}$: The interval measured from the 90 percent point of the falling input pulse V_g to the 90 percent point of the falling output current Xc.

d. t_f: The interval measured from the 90 percent to the 10 percent point of the falling output current I_c.

6. Equipment. A modern high speed digitizing system is recommended. The measurement of W_{ON} or W_{OFF} is accomplished by accessing the output V(t) and I(t) waveforms, digitizing them, and transmitting the data to a computer where W_{ON} or W_{OFF} is calculated and the results displayed. Two factors of importance must be considered.

a. Sample spacing must be short relative to transition times for accurate and repeatable results.

b. The relative V(t), I(t) channel delay must be known and accounted for in the computer program that does the point by point multiplication and summation that determines either W_{ON} or W_{OFF} (see figure 3477-2).

7. Specifications.

a. V_{CL}: Clamp voltage _____ V

b. I_{CE}: Maximum test current A _____ A

c. V_{GE}: Gate to emitter voltage _____ V

d. R_G: Gate resistance _____ Ω

e. T_j: Junction temperature _____ °C

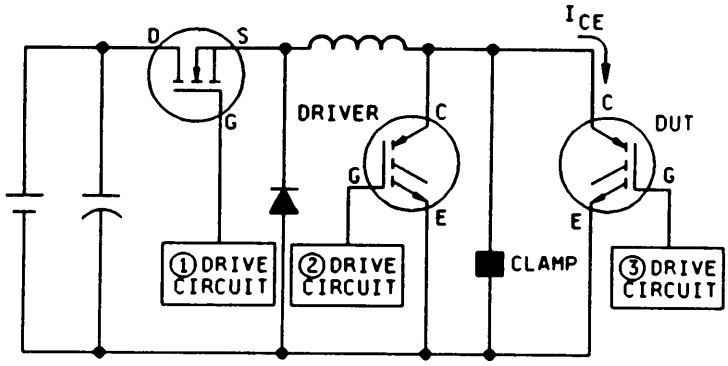

FIGURE 3477-1. Test circuit.

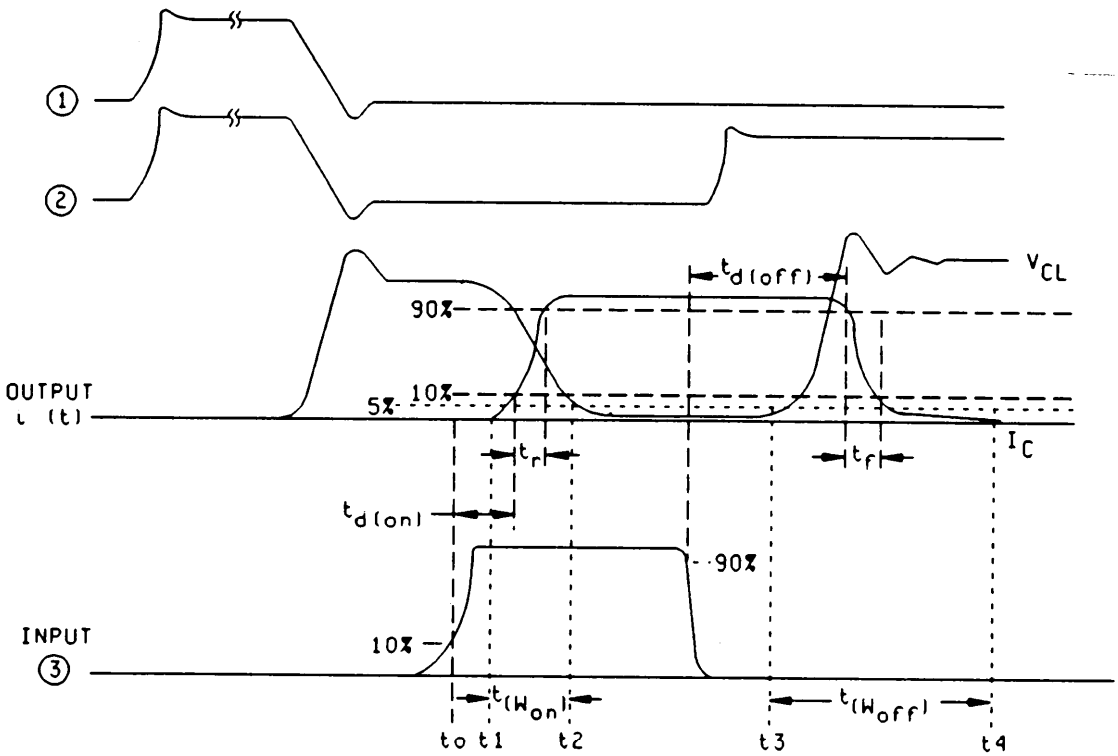

FIGURE 3477-2. Typical clamped inductive waveforms.

METHOD 3478.1

POWER TRANSISTOR ELECTRICAL DOSE RATE TEST METHOD

1. Purpose. This test method establishes a baseline methodology for characterizing high-voltage transistors to high gamma dose rate radiation and for establishing electrical criteria to evaluate key test fixture parameters. From this data, a valid comparison can then be made between the device's response and its radiation data. Since power transistors are susceptible to radiation-induced burnout/damage, this test method should be considered a destructive test. For the IGBT, replace the drain and source MOSFET designations with collector and emitter IGBT designations, D = C and S = E.

2. Definitions. Definitions, symbols, and terms used in this method are provided below:

a. Power transistor burnout: Burnout is defined as a condition that renders the power transistor nonfunctional, usually a result of current-induced avalanche and second breakdown. Identification is accomplished by observing the drain current during irradiation and by verifying the device's performance after irradiation.

b. Symbols and terms:

di/dt: Change in current with respect to time (amperes per second).

dv/dt: Change in voltage with respect to time (volts per second).

I_{ds}: Measured current flowing into drain (amperes).

L_s: Calculated stray inductance observed by the DUT's response (henrys).

PW: Radiation pulse width defined by the full-width half-max (FWHM) measurement (seconds).

RC: Time constant equal to the resistance times capacitance

R_s: Calculated stray resistance observed by the DUT's response (ohms).

V_{ds}: Applied measured drain-to-source voltage (volts).

V_{gs}: Applied measured gate-to-source voltage (volts).

3. Test plan. A detailed test plan shall be prepared specifying, as a minimum, the following information:

a. Identify device types to be tested.

b. Identify number of samples.

c. Test fixture characteristics of stray R_s and L_s: based upon previous data or calculations (see 5.8).

d. Electrical characterization required in accordance with detailed specifications before and after the radiation event.

e. Electrical parameters to be monitored.

f. Complete description of test system (e.g., schematics, flow charts).

4. Apparatus.

4.1 Instrumentation. Instrumentation required to monitor and test the device to high gamma dose rate radiation will generally consist of the following type of equipment.

a. Curve tracer.

b. Digital or analog voltmeter.

c. DC current probe.

d. Digital or analog current meter.

e. Digitizer or storage scope.

f. High-voltage power supply.

4.2 Holding fixture. The holding fixture may be mandated by the test facility. Coordination between users and facility is an absolute necessity. The fixture shall be capable of interfacing the power and signal lines between the test board and DUT, as well as, collimating the radiation beam to expose only the OUT .

4.3 Test fixture. The test board shall be constructed to meet the following requirements:

a. Construction: Circuit layout and construction are critical. Circuit layout and construction shall be optimized to minimize stray L_s and R_s effects presented to the DUT. Applicable gauge wires, ground planes, and materials shall be used to minimize these effects of stray inductance and resistance. Wire lengths shall be kept to an absolute minimum.

CAUTION: Wires lengths connecting the DUT in excess of four inches (101.6O mm) should be re-evaluated to determine shortest possible wire length.

b. Components: Circuit components shall be chosen to optimize performance. Capacitors shall have high "Q" ratings reflecting high di/dt. The test circuit shall have multiple capacitors in parallel, minimizing the parasitic resistance presented by each capacitor while obtaining the required dv/dt response. DC current probes shall be passive having minimal "ac" insertion resistance. The current probe shall also be capable of measuring a large current without saturating its magnetic core.

c. DUT package: Circuit and device parameters will dictate the power transistor response to high gamma dose rate radiation. The DUT shall be tested in the same package type that will be used in the system. If a different package type is used, then electrical, mechanical, and thermal properties of that package need to be considered and their effects accounted for in the test results.

d. Test circuit: Schematically, test circuits are shown on figure 3478-1 and representative waveforms are depicted on figure 3478-2. Components and wiring shall not be placed directly in the radiation beam. An isolation resistor shall be placed between the "stiffening" capacitors and high-voltage power supply, minimizing its interaction with the DUT response. The resistor value will depend on the RC time constant required to isolate interaction. Biasing of the gate shall be accomplished using an RC filtering or ballasting resistor network (see figure 3478-1a or 3478-1b), unless it is connected directly to the common source (see figure 3478-1c).

CAUTION: Peak currents in excess of 1,000 amperes with di/dt in excess of 1,000 amperes per microsecond are possible.

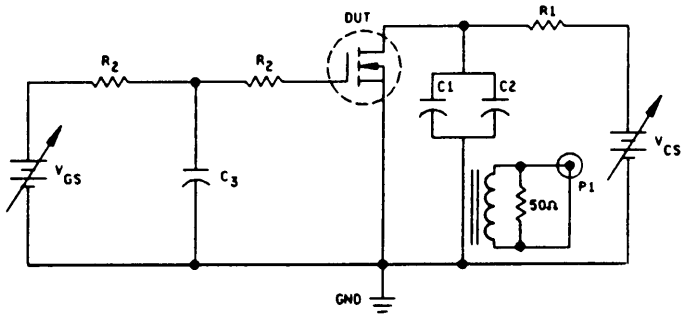

FIGURE 3478-1a. Gate bias configuration 1.

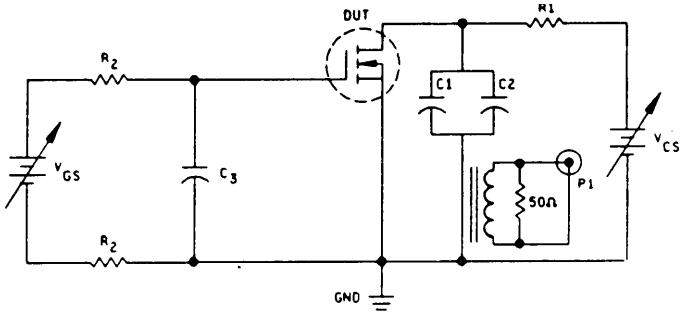

FIGURE 3478-1b. Gate bias configuration 2.

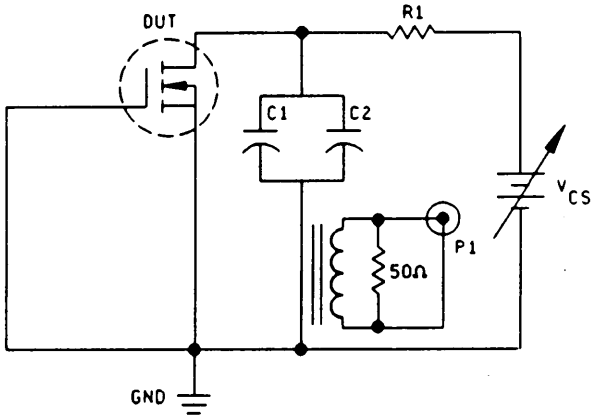

FIGURE 3478-1c. No gate bias configuration 3.

NOTES:

1. C1: Consists of several small capacitors (typically .1 µF).
2. C2: Consists of several large capacitors (typically 200 µF).
3. R1: Drain isolation resistor (typically > 1 kΩ).
4. R2: Gate filter resistor (typically 1 kΩ).
5. C3: Gate filter capacitance (typically 0.1 µF).
6. P1: Current probe (Pearson Model +11 or similar).

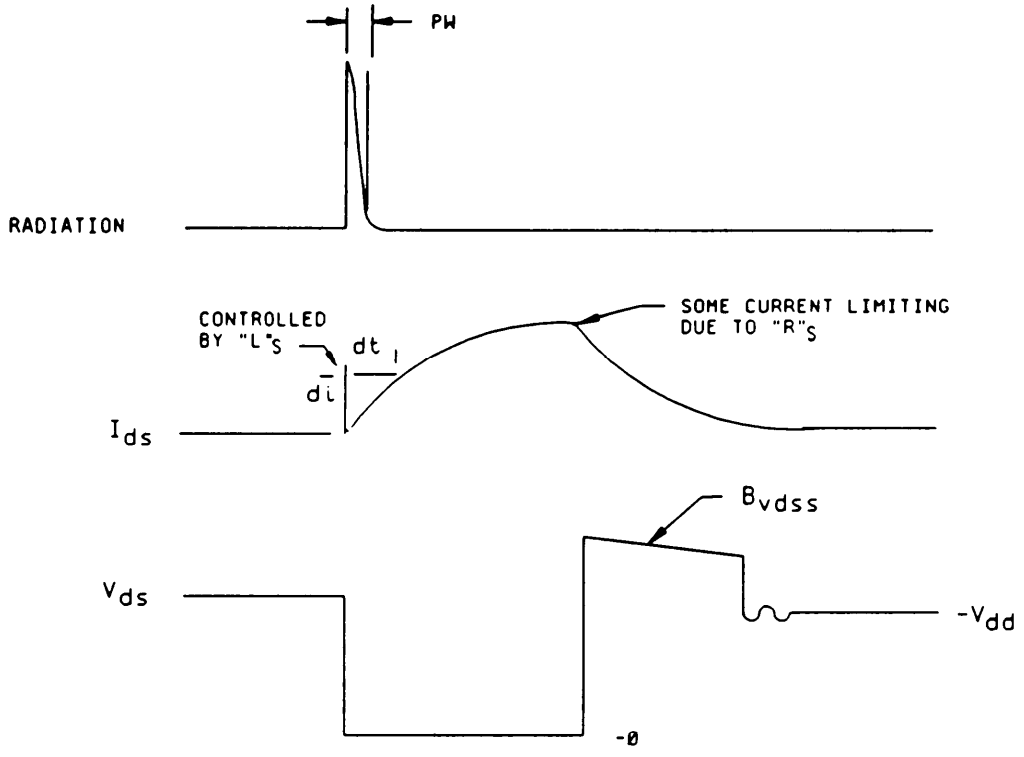

FIGURE 3478-2. Actual test waveforms.

5. Procedure. Two essential requirements are outlined in this procedure that allow a meaningful analysis of a device's radiation response as compared to data obtained on a different test fixture.

a. In 5.1 through 5.7 below, the procedure to characterize power transistor to high gamma dose rate radiation and what data to collect and record are described.

b. In 5.8 below, there is a description for a technique to extract key electrical parameters, L_s and Rs, allowing the test fixture to be characterized using the above radiation data.

5.1 Sample size. A minimum of five samples per device type shall be tested to determine the dose rate response of each power transistor type. All devices shall meet the electrical specifications required for that particular device type before initial exposure.

5.2 Identification. In all cases, each test sample shall be individually marked to ensure that the test data can be traced to its corresponding test sample.

5.3 Radiation source.

a. The radiation source shall be either a flash x-ray or a LINAC.

b. The facility/source shall be capable of varying the dose rate levels to characterize the device's response to various dose rates.

c. The minimum pulse width shall be performed using a 20 to 50 ns pulse width (FWHM).

5.4 Dosimetry. Dosimetry shall be used to measure the actual dose in rad(Si) of the radiation pulse. Any dosimetry technique that meets ASTM standards (ASTM F526-77) may be used.

5.5 Waveform recording. The voltage, V_{ds}, and test current, ids, shall be monitored before, during, and after each irradiation. Voltage in excess of the maximum input voltage of the recording device shall be attenuated.

5.6 Test conditions. The DUT shall be biased with the specified test conditions and verified for each irradiation. Drain and gate current shall be monitored before, during, and after each exposure. The capacitive load across the drain/source shall maintain the drain bias voltage, V_{ds}, during the exposure within ±10 percent of that specified. The test shall not be repeated until the "stiffening" capacitors have sufficiently recharged. All tests shall be performed at the required ambient temperature.

CAUTION: Some transistors may require a gate bias to turn the DUT "off" after the radiation event.

5.7 Test setu~/seauence.

a. Tune LINAC/flash x-ray to desired pulse width and dose rates and perform initial beam dosimetry.

b. Install holding fixture and test system circuitry.

c. Insert DUT (precharacterized in accordance with detailed specification).

d. Apply and verify test voltage to gate (V_{gs}).

e. Apply and verify test voltage to drain (V_{ds}).

f. Connect monitors to appropriate recorders.

g. Expose DUT to desired dose rate.

h. Record photocurrent (I_{ds}) and V_{ds} response.

i. Record test information: Test conditions V_{ds} and V_{gs}; actual dose rate, accumulated total dose, date, and other information pertinent to test.

j. Verify survivability of test device: Check electrical parameters to determine any damage.

k. Repeat with new test conditions: Different V_{ds}, dose rate, or V_{gs}.

5.8 determination of stray inductance/resistance. Knowing the stray components, L_s and R_s, will provide a technique to compare test data from different test fixtures and packages. L_s and R_s will limit the mount of current flow and the peak current observed by the DUT.

a. Using the recorded photocurrent waveforms, the quantitative values of the stray resistance, R_s, and inductance, L_s, can be extracted for that test fixture and package.

CAUTI0N. The stray fixture components may change with exposure to radiation, testing, or time.

b. Determine the inductance, L_s, from the relationship:

$$\left(\frac{di}{dt}\right) = \left(\frac{V_{ds}}{L_s}\right)$$

and

$$L_s = \frac{V_{ds}}{\left(\frac{di}{dt}\right)}$$

The calculated inductance will be influenced by the series resistance; and, therefore, the value of the di/dt response shall be based upon the change in primary photocurrent between its 0 percent to 10 percent response. The L_s value shall be determined from this experimental data.

c. Determine the resistance, R_s, from the relationship:

$$I_{ds} = \left(\frac{V_{ds}}{R_s}\right) * \left[1 - \left(\exp - \left(t * \frac{R_s}{L_s}\right)\right)\right]$$

The calculated resistance should be determined from the peak primary photocurrent response and its corresponding time. Using iterative calculations, R_s shall be determined within ±five percent based upon this experimental data.

6. Documentation. Test records shall be maintained by the experimenter. Test records shall include the following:

a. Part type, item, and lot identification.

b. Date of test and operator's name.

c. Identification of radiation source and pulse width.

d. Description of test system and circuit.

e. Description of dosimetry techniques and circuits.

f. Test bias conditions.

g. Recorded voltage current waveforms.

h. Minimum dose rate V_{ds} to induce burnout.

i. Maximum dose rate V_{ds} not to induce burnout.

j. Device leakage currents before and after irradiation.

k. Recorded waveforms of pulse shape intensity.

l. Accumulated total dose.

m. Ambient test temperature.

n. Calibration records and serial numbers, if required.

o. DC electrical measurements after radiation event.

6.1 Reporting. This documentation shall be used to prepare a summary describing the test system, data, results, and analysis. The summary shall include a description of the device, dc electrical parameters before and after testing, a statistic summary indicating the sample mean and standard deviation of each device type, plots of photocurrent versus dose rate at a specified V_{ds} and V_{gs}, calculations for Stray Ls. and R_s for the test fixture for each device type or package type, and a general synopsis of the test results.

METHOD 3479

SHORT CIRCUIT WITHSTAND TIME

1. Purpose. In some circuits, such as motor drives, it is necessary for a semiconductor device to withstand a short circuit condition for short periods of time. During such a condition, the current in the device is dependent on the gain of the device and the level of the drive supplied. It is important for the designer to know how long a device can survive a short circuit condition with a given drive level. Fault detect circuits can be designed to react within this time period. In some cases the junction temperature may exceed the maximum rating. If it does, the rating shall be nonrepetitive with a limit on the maximum number of events over the lifetime of the device. Otherwise, it will be a repetitive rating. In the case of a nonrepetitive rating, the manufacturer shall perform adequate reliability testing so as to ensure the validity of this rating. For military specifications, the controlling document shall mandate such tests.

2. Scope. This method covers all power semiconductors or hybrids that can be turned off with a control terminal and which are intended for use as switching devices. Power MOSFET's, IGBT's, and bipolar transistors are examples of these devices.

3. Definitions.

a. T_j: Junction temperature ("C). Its starting value shall be specified, and controlled to five percent at the beginning of the test.

b. t_{sc}: Short circuit withstand time (seconds). Measured between the time the device drive rises above 50 percent of its peak value, and when it falls below 50 percent of its peak value.

c. V_{sc}: Nominal short circuit voltage (volts). Must be maintained between +5 percent and -10 percent of the specified value during the test.

d. L_s: Stray inductance of the output circuit shall be kept as low as is practical, in order to verify this the maximum value of is shall be a condition of the test called out on the detailed specification of the device (see figure 3479-2). L_s = V dt/di during the first 10 percent of the output current waveform.

e. Drive: One of the following:

V_{DRIVE} = Nominal drive voltage (volts).

I_{DRIVE} = Nominal drive current (amperes).

This value must be maintained to within ±5 percent of the specified value. In a graphical representation, various levels of "drive" may be specified, as shown on figure 3479-3. The speed of turn-off shall be such that avalanching the DUT is prevented

f. R_{DRIVE}: The output impedance of the drive circuitry.

4. Circuitry. Electrical test circuitry is as shown on figure 3479-1. Drive circuitry must be appropriate for the device being tested, whether voltage or current driven. Care must be taken to minimize stray inductance in the output circuit in order to avoid limiting the current during the test, or avalanching the device during turn off at the end of the test.

4.1 Procedure for measurement of short circuit withstand time (see figure 3479-2).

a. t0: Apply test voltage.

b. t1: Apply drive signal.

c. t2: Device drive reaches 50 percent of maximum value.

d. t3: Remove drive signal.

e. t4: Device drive falls to 50 percent of maximum value.

f. t5: Remove test voltage.

5. Acceptance criteria. DC electrical test shall be conducted before and after the test. Exactly which parameters are to be measured will be device dependent, and shall be called out on the detail specification.

6. Specification. Tabular specification shall be as follows:

t_{sc} short circuit withstand time _____ µs at:

1. V_{sc} short circuit voltage _____ V

2. Drive voltage (or current) _____ V (or A)

3. T_j junction temperature _____ °C

4. R_{DRIVE} output impedance _____ Ω

5. L_s stray inductance _____ nH

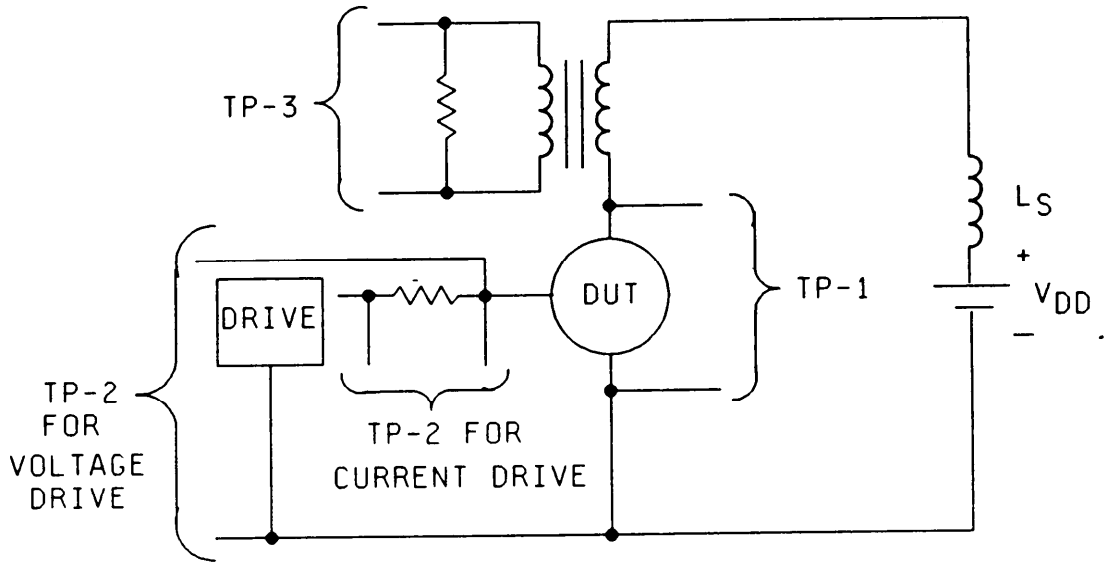

FIGURE 3479-1. Test circuit.

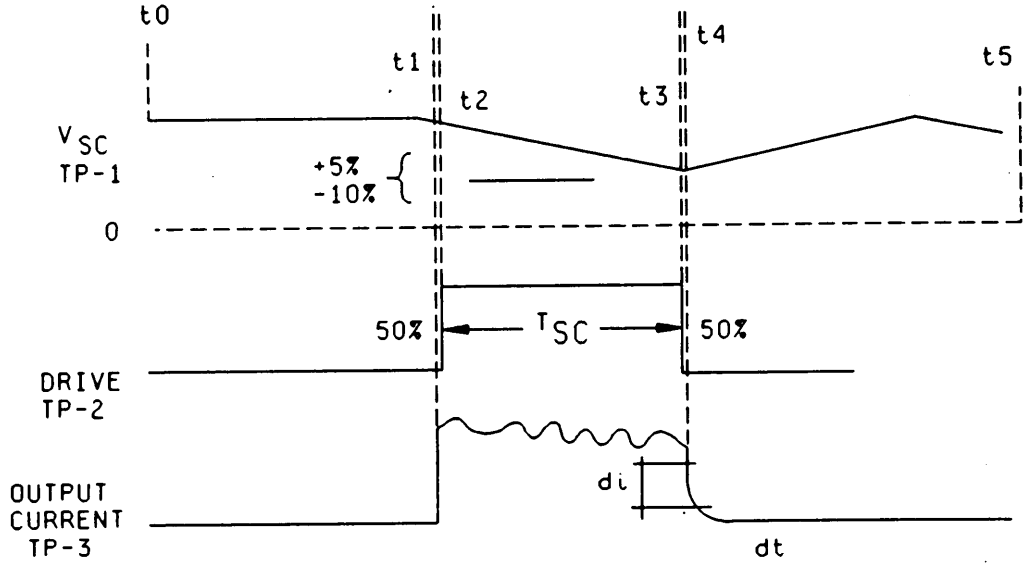

FIGURE 3479-2. Short circuit withstand time waveform.

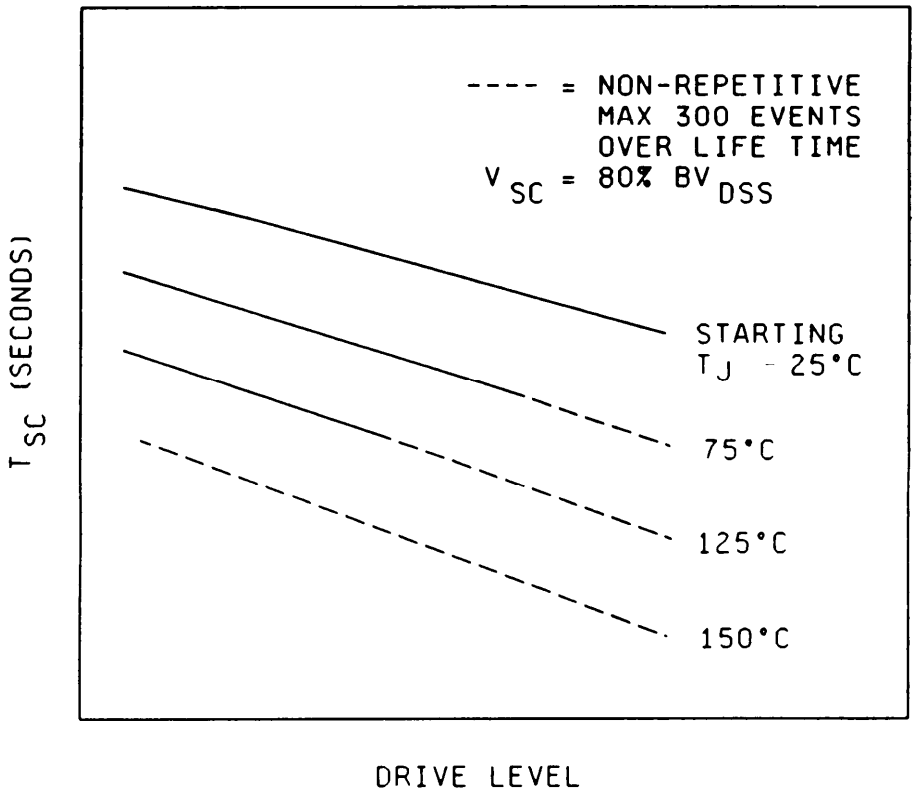

FIGURE 3479-3, Sample graphical specification.

METHOD 3490

CLAMPED INDUCTIVE SWITCHING SAFE OPERATING AREA FOR MOS GATED POWER TRANSISTORS

1. Purpose. To define a method for verifying the inductive switching SOA for MOS gated power transistors, to assure devices are free from latch up.

2. Scope. This method includes all power MOSFETs and IGBTs used in switching applications for power supplies and motor controls.

3. Circuitry. As shown on figure 3490-1, a simple inductive load circuit is employed. Drive circuitry applies a voltage to the DUT to achieve a specified current. The turn-off dv/dt is controlled by a gate resistor. A clamping diode or suppression device is used to limit the maximum voltage which occurs during turn-off. The clamping device must be located as close as possible to the DUT to minimize voltage spikes due to stray inductance L_s.

4. Definitions:

T_J: Junction temperature (C°): Shall not exceed maximum rating of the DUT.

T_A: Ambient temperature (C°): Temperature used to heat the DUT.

T_c: Case temperature (C°): Temperature of the DUT as measured on the exterior of the package as close as possible to the die Location.

V_{cc}: Collector supply voltage, dc.

V_{CF}: Clamping voltage.

V_{CES}: Collector to emitter voltage gate shorted to emitter.

V_{DSS}: Source to drain voltage gate shorted to source.

V_{DM}: Maximum off-state voltage measure at the DUT which is caused by stray inductance between the DUT and the voltage suppressor. V_{DM} is due to L di/dt generated during turn-off.

I_L: Load current through inductor and DUT.

V_G: Drive voltage from a voltage source used to turn-on and turn-off the MOS DUT to achieve a specified current.

'9: Resistor in series with the gate which is used to limit turn-off dv/dt during switching.

dv/dt : Change in voltage during turn-on and turn-off measured between 75 percent and 25 percent of total clamp voltage during turn-off.

t_p: Pulse width between turn-on and turn-off of DUT.

L_s: Stray series inductance due to layout of circuit.

L: Series inductance.

5. Specification conditions. The following conditions shall be specified in the detail specification:

V_{CC}: V.

V_{CF}: V.

I_L: A.

$T_C = T_A$: °C.

L: mH.

t_p: µs.

dv/dt: V/µs minimum.

N: Number of pulses.

6. Acceptance criteria.

a. No degradation of blocking voltage at the end of test shall be permitted.

b. Latch-up or reduction of IL shall not be observed.

c. DUT must meet group A, subgroup 2 limits.

7. Comments and recommendations.

a. Gate resistor or gate drive source must be as close as possible to the DUT to minimize oscillations during turn-off.

b. Gate resistor valve or gate drive is selected to assure minimum peak dv/dt is achieved.

c. V_{CF} clamping device should be as close as possible to the DUT to minimize voltage over shoot . A general guideline is V_{CF} should not exceed 110 percent of V_{DM} and must be less than avalanche breakdown of DUT.

d. L should be selected to assure peak current is reached. The I_c will not be reached if too large of an inductor is used.

e. Safety precautions should be taken when testing high voltage devices and rules and regulations for handling high voltage devices should be followed.

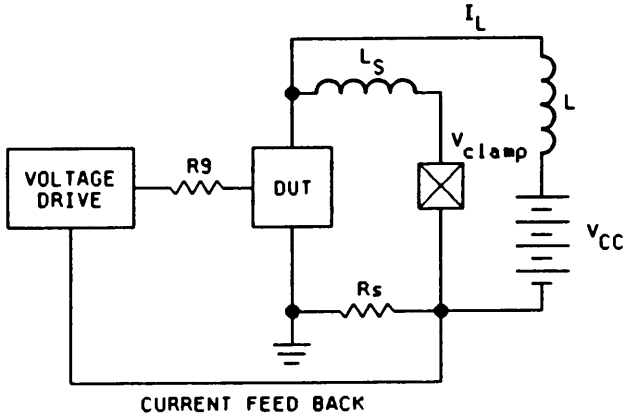

FIGURE 3490-1. Inductive load circuit.

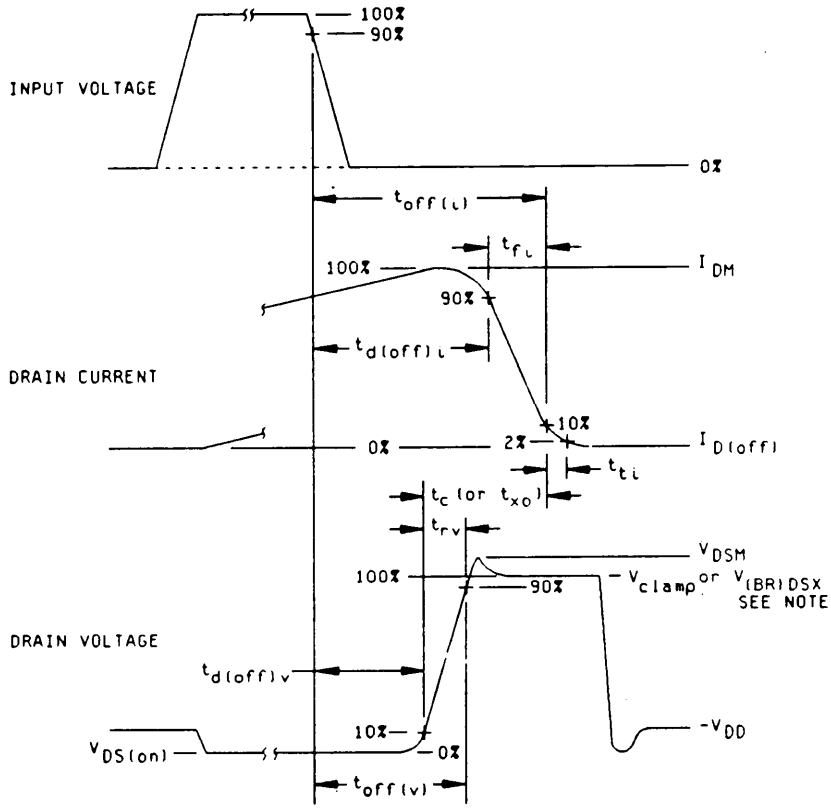

NOTES:

1. V_{clamp} (in a clamped inductive-load switching circuit) or $V_{(BR)DSX}$ (in an unclamped circuit) is the peak off-state.
2. Drain and source references for MOSFETs are equivalent to collector and emitter references for IGBTs.

FIGURE 3490-2. Inductive load waveform.

3500 Series

Electrical characteristics tests for Gallium Arsenide transistors

METHOD 3501

BREAKDOWN VOLTAGE, DRAIN TO SOURCE

1. Purpose. The purpose of this test is to determine if the breakdown voltage of the gallium arsenide field-effect transistor under the specified conditions is greater than the specified minimum limit.

2. Test circuit. See figure 3501-1.

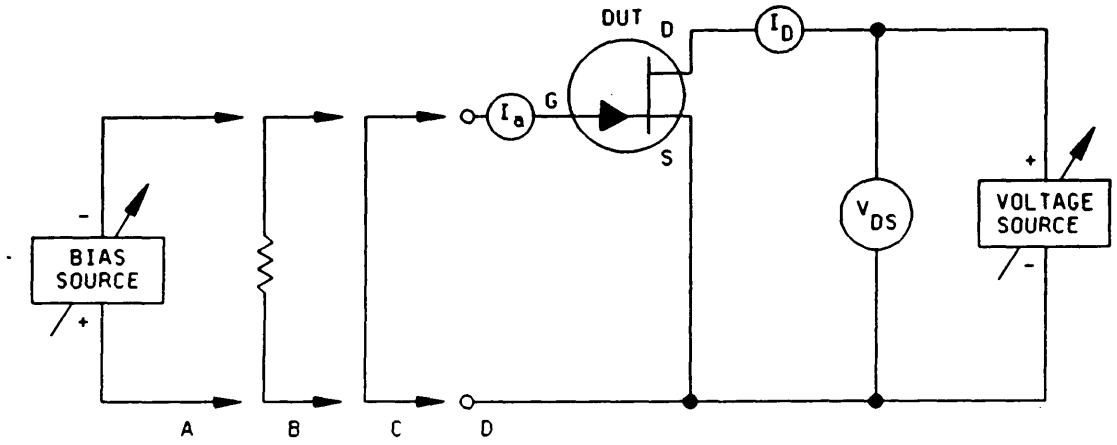

NOTE: The ammeter shall present essentially a short circuit to the terminals between which the current is being measured or the voltmeter readings shall be corrected for the drop across the ammeter.

FIGURE 3501-1. Test circuit.

3, Procedure. A negative (reverse) voltage shall be applied to the gate, with the specified bias condition (condition A) applied, then a positive voltage applied to the drain. The device is acceptable if the gate current 1/ is less than the maximum specified with the voltage bias conditions on the gate and drain as specified in the detail specification. With the specified gate and drain voltages, if the specified maximum gate current is exceeded, the device shall be considered a failure.

4. Summary. The following conditions shall be specified in the detail specification:

a. Test current (see 3).

b. The bias condition is gate to source and drain to source - reverse bias (specify bias voltages).

1 / Iq - - - - - Breakdown voltage as determined by maximum. Allowed gate current, with the specified bias condition applied from gate to source and drain to source.

METHOD 3505

MAXIMUM AVAILABLE GAIN OF A GaAs FET

1. Purpose. This method establishes a basic test circuit for the purpose of determining the associated gain of a gallium arsenide field-effect transistor (FET).

2. Procedure. Configure the test setup as shown on figure 3505-1. First apply the gate voltage (V_{GS}) then apply the drain voltage (V_{DS}). Adjust the gate voltage so that the FET is biased at the specified operating point as noted in the detail specification, such as I_{DS} = 50 percent of I_{DSS}. Adjust the input and output tuners so that the transistor exhibits maximum output power and near maximum gain, that is, the transistor's gain must not be compressed more than 2 dB. The input power level is then reduced by at least 10 dB. At this reduced input signal level, the small signal gain is defined as GO.

Calculation:

G_{1dB} = GO - 1.0 dB (Associated gain at the 1 dB compression point).

The gain of the FET (output power/input power in dB) is recorded as the input power is increased in 1 dB increments. When the measured gain of the FET is less than or equal to G_{1dB}, as calculated above, the output power is recorded and this value represents the 1 dB compression point (P_{1dB}) power level and is used in determining the pass/fail status of the DUT in accordance with the value specified in the detail specification.

3. Test circuit. See figure 3505-1.

4. Summary. Unless otherwise specified in the detail specification, the following condition shall apply: T_c = (Temperature of case) = +25°C.

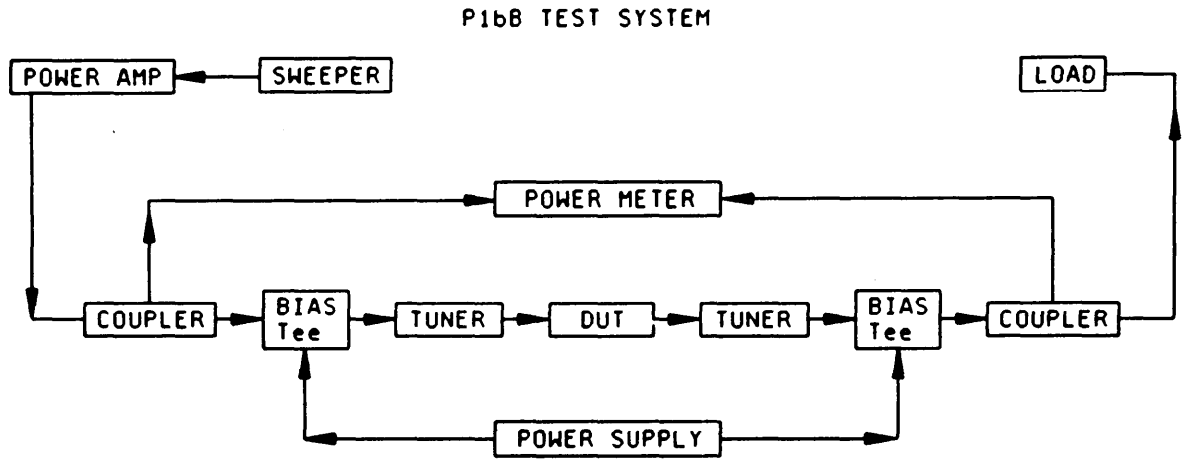

FIGURE 3505-1. Test circuit.

METHOD 3510

1 dB COMPRESSION POINT OF A GaAs FET

1. Purpose. This method l stablishes a basic test circuit for the purpose of determining the 1 dB compression point of a gallium arsenide FET.

2. Procedure. Configure the test setup as shown on figure 3510-1. To prevent damage to the DUT, first apply the gate voltage (V_{GS}) then apply the drain voltage (V_{DS}). Adjust the gate voltage so the FET is biased at the specified operating point as noted in the detail specification, such as I_{DS} = 50 percent of I_{DSS}. Adjust the input power to the level and frequency given in the detail specification; adjust the input and output tuners so the transistor exhibits maximum output power while its gain remains within 2 dB of the manufacturer's specified minimum gain for the part and while the gate current remains within the range specified in the detail specification. The gate current must also remain within the range specified in the detail specification. The input power level is then reduced by 10 dB or some greater amount specified in the detail specification. At this reduced input signal level the small signal gain is defined as GO.

Calculation: G_{1dB} = GO = 1.O dB.

The gain of the FET (output power/input power in dB) is recorded as the input power is increased in increments of 1 dB decreasing to 0.25 dB, or smaller, as G1dB is approached. When the gain of the FET is less than or equal to G_{1dB}, as calculated above, the output is recorded and this value represents the 1 dB compression point (P_{1dB}) and is used in determining the pass/fail status of the DUT in accordance with the value specified in the detail specification.

3. Test circuit. See figure 3510-1.

4. Summary. Unless otherwise specified in the detail specification, the following condition shall apply: (T_c) = (Temperature of case) = +25°C.

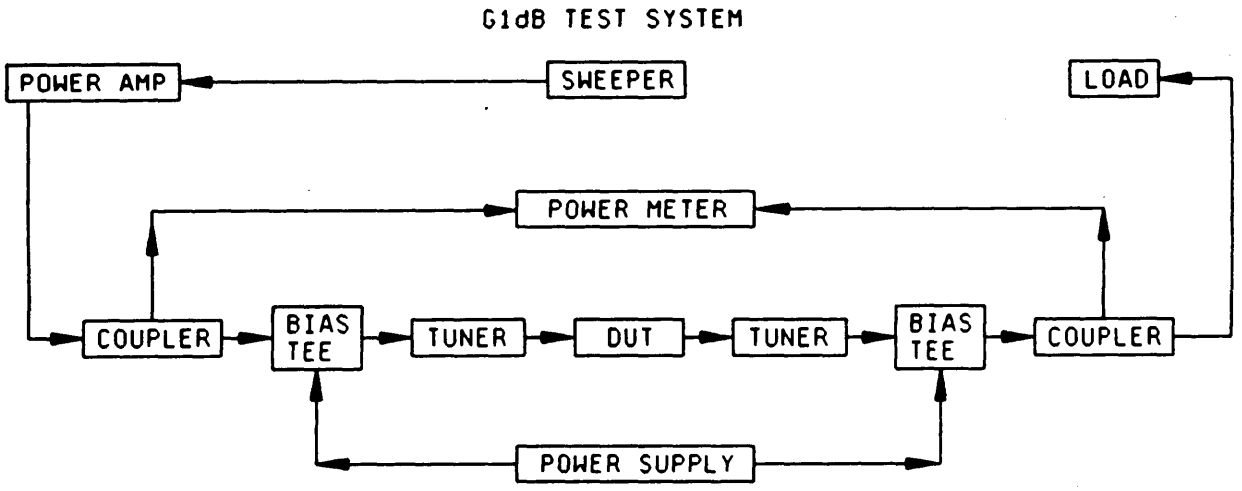

FIGURE 3510-1. Test system.

METHOD 3570

GaAs FET FORWARD GAIN (Mag S21)

1. Purpose. This method establishes a basic test method, test setup, and procedure for measuring the forward gain (Magnitude of S21) of GaAs FETs.

2. Procedure. Configure and calibrate the test setup as shown on figure 3570-1. To prevent damage to the DUT, first apply the gate voltage (V_{GS}) and then apply the drain voltage (V_{DS}) to the bias levels specified in the detail specification. Adjust the gate voltage so that the DUT is biased at the specified operating point, such as I_{DS} = 50 percent of I_{DSS}. Record the DUT's magnitude of S21 (in dB) using the network analyzer as shown on figure 3570-1.

3. Test circuit. See figure 3570-1.

4. Summary. Unless otherwise specified in the detail specification, the following conditions shall apply: (T_c) = (Temperature of case) = +25°C.

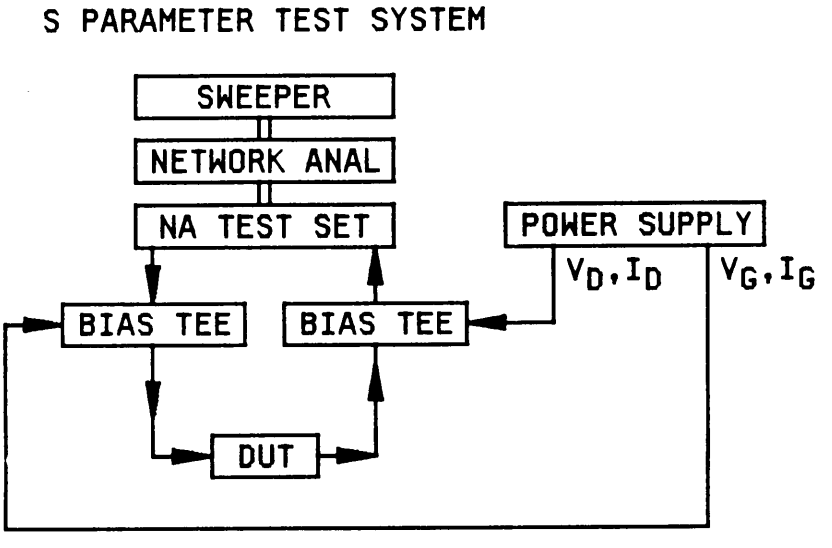

FIGURE 3570-1. Parameter test system.

METHOD 3575

FORWARD TRANSCONOUCTANCE

1. Purpose. This method establishes a basic test circuit for the purpose of establishing forward transconductance gm for gallium arsenide field-effect transistors.

2. Procedure. The gate to source voltage (V_{g1}) is applied as necessary to achieve the specified drain to source current (I_{DS1}). The gate to source voltage is reduced gradually or increased gradually by 0.050 volts (V_{g2}) and the drain to source current is measured (I_{DS2}). The transconductance (gin) is calculated using the following formula:

Calculation:

$$gm = \left| \frac{I_{d1} - I_{d2}}{0.050} \right|$$

3. Test circuit. See figure 3575-1.

4. Summary. Unless otherwise specified in the detail specification, the following conditions shall apply:

a. $I_{D1} = 0.5\ I_{DSS} \pm 10$ percent I_{DSS}.

b. Unless otherwise specified, T_c = (Temperature of case) = +25°C.

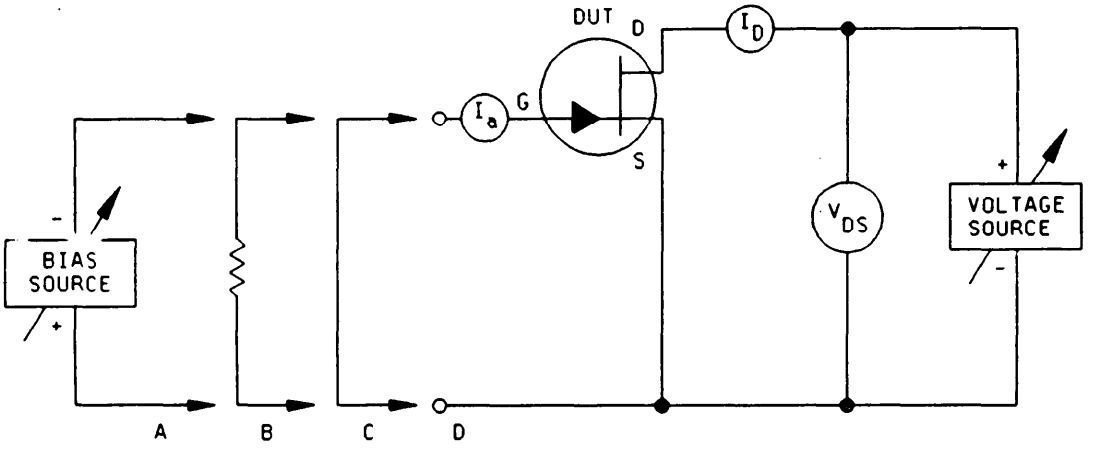

NOTE: The ammeter shall present essentially a short circuit to the terminals between which the current is being measured or the voltmeter readings shall be corrected for the drop across the ammeter.

FIGURE 3575-1. Forward transconductance circuit.

4000 Series

Electrical characteristics test for diodes

METHOD 4000

CONDITIONS FOR MEASUREMENT OF DIODE STATIC PARAMETERS

1. Purpose. When measuring a temperature-sensitive static parameter under conditions such that the product of the applied voltage and current at the test point produces a power dissipation level that will cause significant heating of the junction, the measured result may be subject to errors due to thermal or transient effects. In order to avoid such errors, the measurement should be made under defined conditions.

2. Steady state dc measurements. When making measurements under conditions of steady state dc, a condition of thermal equilibrium may be considered to have been achieved if halving the time between the application of power and the taking of the reading causes no error in the indicated results within the required accuracy of measurement. For these purposes very long pulses or step functions may be considered as steady state dc. When appropriate, the mounting conditions (T_L or T_C) or the thermal resistance (reference point to ambient $R_{\theta CA}$ or $R_{\theta LA}$) shall be specified.

3. Pulse measurements. When a measurement is made under pulse conditions, the point of measurement after the start of the pulse shall be chosen such that it is long enough to charge interconnecting test cable capitance, avoid electrical transient effects, and short enough to avoid heating effects. This can be ensured if halving the minimum selected time, or doubling the maximum selected time, will not produce errors beyond the defined accuracy of the measurement. The pulse measurement may be intended to correlate to a steady state dc measurement, provided that a correlation has been established.

METHOD 4001.1

CAPACITANCE

1. Purpose. The purpose of this test is to measure the capacitance across the device terminals under specified dc bias and ac signal voltages.

2. Test circuit. See figure 4001-1.

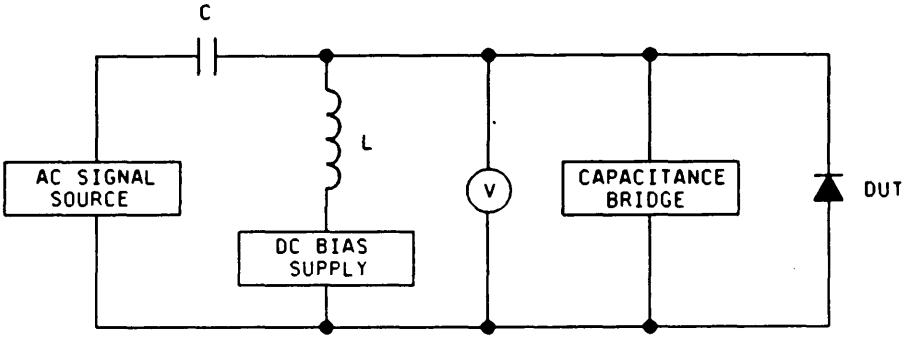

NOTE: Both dc bias and ac signal sources may be incorporated in the capacitance bridge. The dc bias source should be properly isolated, preferably with an inductance L in series and have negligible capacitance compared to the DUT. The reactance of C must be negligible compared to the reactance of the DUT, at the frequency of measurement. Impedance of voltmeter should be at least 10 times that of the DUT.

FIGURE 4001-1. Test circuit for capacitance.

3. Procedure. The dc voltage source shall be adjusted to the specified bias voltage. The ac small signal voltage shall be adjusted to the specified frequency for the capacitance measurement. The bridge shall be nulled and adjusted for zero capacitance reading just prior to insertion of the DUT to eliminate error from external circuitry.

4. Summary. The following conditions shall be spedified in the detail specification:

a. DC bias voltage.

b. Test frequency.

METHOD 4011.4

FORWARD VOLTAGE

1. Purpose. The purpose of this test is to measure the voltage across the device when a specified current flows through the device in the forward direction.

2. Test circuit. See figure 4011-1.

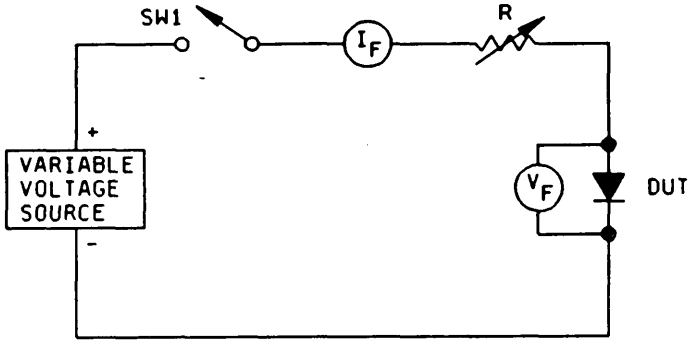

NOTE: When specified, switch SW1 shall consist of either an electronic switch or a pulse generator to provide pulses of short-duty cycle to minimize device heating. When pulse techniques are used, suitable peak-reading methods shall be used to measure the parameters of pulse amplitude, frequency, duty cycle, and pulse width. When dc techniques are used, device thermal equilibrium shall be achieved before the measurement is made.

FIGURE 4011-1. Test circuit for forward voltage.

3. Procedure.

3.1 DC method. The specified test current (I_F) shall be adjusted by varying either the variable voltage source or the resistor (R). The value of I_F shall be measured using an ammeter. The forward voltage (V_F) shall be measured using a dc voltmeter. The voltmeter connections shall be made at specified points on the device and always within the current connection points.

3.2 Pulse method. An oscilloscope shall be used to measure the pulse characteristics. The pulse generator or electronic switch shall be adjusted to achieve the specified amplitude, frequency, and pulse width values. Device current (IF) may be determined by measuring the voltage drop across a known value of resistor (R) where $I_F = \frac{V\ peak\ X\ duty\ cycle}{R}$

After adjusting pulse level to correct value for required IF, measure forward voltage V_F.

3.3 Curve tracer method. A Tektronix Model 576 or equivalent curve tracer shall be used. The device shall be tested by applying a positive voltage to the anode and limiting the current to within the manufacturer's ratings for IF. The forward voltage may be determined by observing the curve tracer waveform at the specified IF.

4. Summary. The following conditions shall be specified in the detail specification:

a. Test current (I_F).

b. Forward voltage (V_F).

c. Duty cycle and pulse width, when pulse techniques are used.

METHOD 4016.3

REVERSE CURRENT LEAKAGE

1. Purpose. The purpose of this test is to measure the reverse current leakage through a device at a specified reverse voltage using a dc method or an ac method, as applicable.

2. DC method.

2.1 Test circuit. See figure 4016-1.

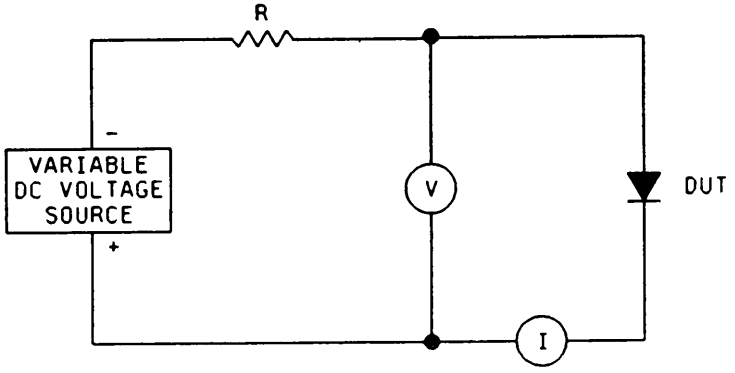

NOTE: To assure accurate measurement of reverse leakage current, the voltage drop across the ammeter shall be subtracted from the measured value of reverse voltage. Resistor (R) shall be chosen to limit the current flow in the event the device goes into reverse breakdown.

FIGURE 4016-1. Test circuit for reverse current leakage (dc method).

2.2 Procedure.

2.2.1 Reverse current. The dc voltage shall be adjusted to the specified value by voltmeter (V) and the reverse current (I_R) shall be measured by current meter (I).

3. AC method.

3.1 Test circuit. See figure 4016-2.

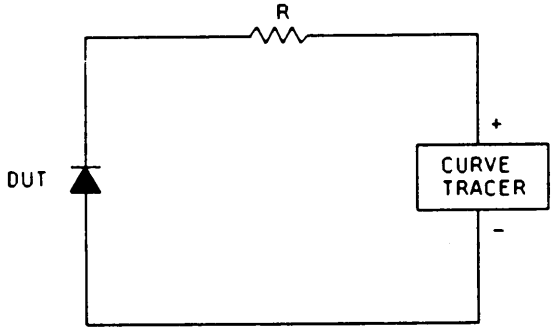

FIGURE 4016-2. Test circuit for reverse current leakage (ac method).

3.2 Procedure.

3.2.1 Reverse current. A Tektronix 576 curve tracer or equivalent shall be used. The curve tracer supply shall be adjusted to obtain the specified peak reverse voltage across the device. Current and voltage shall be measured on the curve tracer.

4. Summary. The following conditions shall be specified in the detail specification:

a. DC or ac method.

b. Test voltage (dc method) or peak reverse voltage (ac method).

c. Thermal resistance of minimum heat dissipator on which device is mounted in °C/W (where applicable).

METHOD 4021.2

BREAKDOWN VOLTAGE (DIODES)

1. Purpose. The purpose of this test is to determine if the breakdown voltage of the device is greater than the specified minimum limit.

2. Test circuit. The resistance R is a current-limiting resistance and is chosen to avoid excessive current flowing through the device.

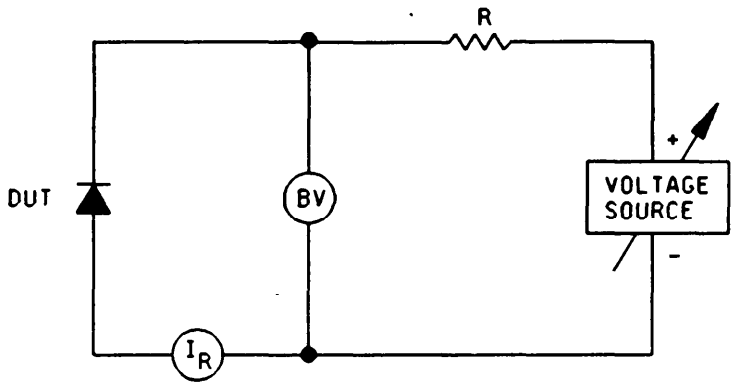

NOTE: The ammeter shall present essentially a short-circuit to the terminals between which the current is being measured or the voltmeter readings shall be corrected for the drop across the ammeter.

FIGURE 4021-1. Test circuit for breakdown voltage (diodes).

3. Procedure. The reverse current shall be adjusted from zero until either the minimum limit for breakdown voltage or the specified test current is reached. The device is acceptable if the specified minimum limit for BV is reached before the test current reaches the specified value. If the specified test current is reached first, the device is rejected.

4. Summary. The test current (see 3.) shall be specified in the detail specification.

METHOD 4022

BREAKDOWN VOLTAGE
(VOLTAGE REGULATORS AND VOLTAGE-REFERENCE DIODES)

1. Purpose. This test is designed to measure the breakdown voltage of voltage regulator and voltage-reference devices under the specified conditions.

2. Test circuit. See figure 4022-1.

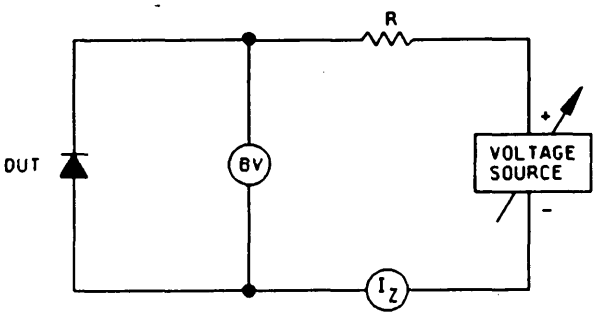

NOTE: The voltmeter being used to measure the terminal voltage should present an open circuit to the terminals across which the voltage is being measured.

FIGURE 4022-1. Test circuit for breakdown voltage (voltage regulators and voltage-reference diodes).

3. Procedure. The reverse current shall be adjusted from zero until the specified test current is reached. The specified test current shall remain applied for the specified time to approach thermal equilibrium with the device mounted as specified in the individual specification. The breakdown voltage shall then be read from the voltmeter.

4. Summary. The following conditions shall be specified in the detail specification:

a. Test current, see 3.

b. Time after application of test current when breakdown voltage shall be read.

c. Method of mounting.

METHOD 4023

SCOPE DISPLAY

1. Purpose. The purpose of this test is to define criteria for inspection of the dynamic reverse characteristics of rectifiers, switching, and zener diodes when viewed on a curve tracer. This inspection criteria may not be applicable to specific rectifier designs where the device is not intended to be driven into avalanche breakdown, or where the detail specification has not provided for this inspection.

2. Scope.

a. All devices requiring stable or sharp and stable breakdown characteristics. NOTE: Since low voltage zeners do not inherently have, and some other devices may not have a "sharp" breakdown, specific exceptions in requirements are also provided herein.

b. For condition A, stable (on(y) types, figures 4023-3 through 4023-11 shall apply.

c. For condition B, sharp and stable types, figures 4023-2 through 4023-11 shall apply. The ideal sharp and stable trace is one which exhibits a single horizontal line up to the point of breakdown, then transitions vertically to form a 90 degree angle while maintaining the single line (see figure 4023-1). Obviations from this ideal, which are not specifically allowed in this method or detail, specification shall be cause for rejection of the device under test. The following depictions (figures 4023-2 through 4023-11) have been compiled to describe commonly observed faults. Tolerances from acceptable devices have been assigned when applicable.

3. Procedures.

a. The curve tracer presentation shall be configured so that the horizontal axis shall be calibrated in volts per division and the vertical axis shall be calibrated in amps per division (or fractions thereof). The vertical and horizontal axis of the curve tracer presentation will be graduated into 8 or 10 divisions, each representing a precalibrated increment of current or voltage.

b. A series load resistor shall be used to limit the device reverse current and prevent device damage. This typical resistance should be approximately one quarter or more of the device resistance at the breakdown specification, when the curve trace set-up permits. Example: A device to be observed at I_{BR} of 100 µA which is specified to be 400 volts minimum, would have a series resistance chosen according to the following:

$$R \geq 0.25\ (400\ /\ 0.0001),\ \text{therefore}$$
$$R \geq 1\ M\Omega$$

The curve tracer peak voltage (V_{CT}) may also require limitation, particularly if the series load resistance described cannot be achieved. See figure 4023-1 and e for typical load line relationships to assure safe reverse current monitoring.

c. The trace should occur in the first and third quadrant of the display and be slowly adjusted from zero volts to attain the specified current with the maximum amount of resolution for determination of trace characteristics. The dut shall be held under breakdown conditions for at least one second to ensure freedom from intermittent instability for breakdown drift. NOTE: All figures herein are shown in the first quadrant.

d. The vertical and horizontal sensitivity shall be adjusted on the curve tracer to provide a rendition of the complete trace to the specified current. Horizontal and vertical sensitivity shall be adjusted to provide a trace occupying no less than 50 percent of the available screen.

e. The curve trace voltage shall not be simply set at a predetermined value and snapped on instantaneously. This may be done only if the product to be tested is known to have a sufficiently narrow breakdown voltage (V_{BR}) range with a predetermined series (load line) resistor setting (see b.) and described below, to assure that the device will not be overpowered. This is typically the case for zener diodes prescreened on V_Z (or V_{BR}). The peak open circuit supply voltage of the curve tracer (V_{CT}) may then be adjusted such that the V_{CT} setting can provide no more current (I_{BR} or I_z) than that required for avalanche breakdown, taking into account the series load resistance "R" in figure 4023-1. Unless otherwise specified, these relationships may be calculated by:

$$I_{BR} = \frac{V_{CT} - V_{BR}}{R}, \text{ and } V_{CT} = I_{BR}R + V_{BR}$$

The resistance "R" may be determined by:

$$R = \frac{V_{CT} - V_{BR}}{I_{BR}}$$

The V_{BR} (or V_z) utilized in this equation should be the minimum expected so as to always maximize the R value selected.

f. Allowance for deviation from the desired characteristics described in this method or detail specification must be granted by the qualifying activity. If a particular rejectable trace described is expected in a manufacturer's normal process, it must be identified and explained during device conformance/ qualification. Devices exhibiting the exceptional trace characteristic must be present in the conformance/qualification lot to establish reliability.

4. Summary. The following condition shall be specified in the detail specification: Test condition to be used.

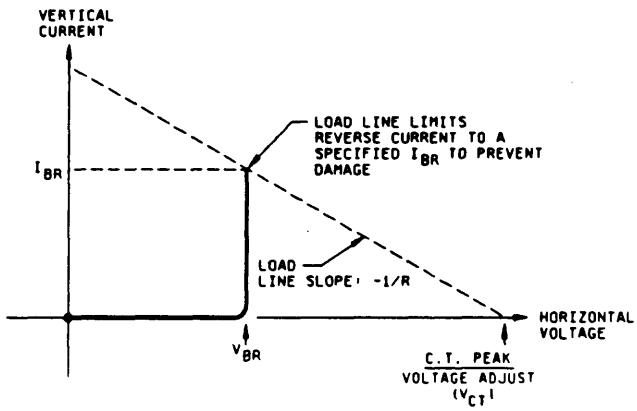

This ideal trace exhibits none of the characteristics described on the figures below. Also, illustrated are the basic curve tracer adjustments and relation for a safe maximum operating current (I_{BR}) with the series load resistor (R) versus peak open circuit voltage (V_{CT}) and device breakdown voltage (V_{BR}).

FIGURE 4023-1. Ideal reverse.

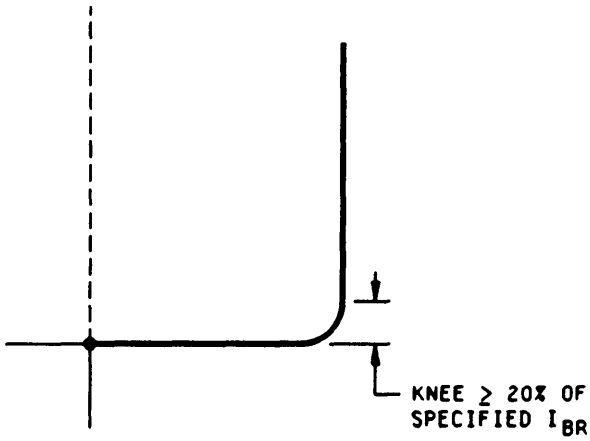

The knee area is the area in which the trace transitions from the horizontal to the vertical. Unless otherwise specified, this area should not require more than 10% of the total horizontal voltage component being viewed, or more than 20% of the specified I_{BR}. Not applicable to fast, ultrafast, and schottky rectifiers or low voltage zeners < 10 volts.

FIGURE 4023-2. Soft knee

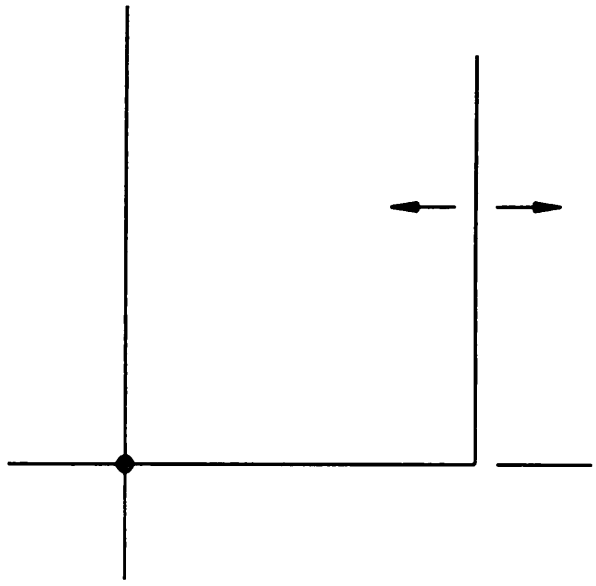

The vertical component of the trace should remain stable in the horizontal axis. An undesirable drift is defined as greater than a 10 percent increase or 2 percent decrease in actual breakdown voltage up to 1,500 volts. If over 1,500 volts, the allowable drift should be separately specified.

FIGURE 4023-3. Drift

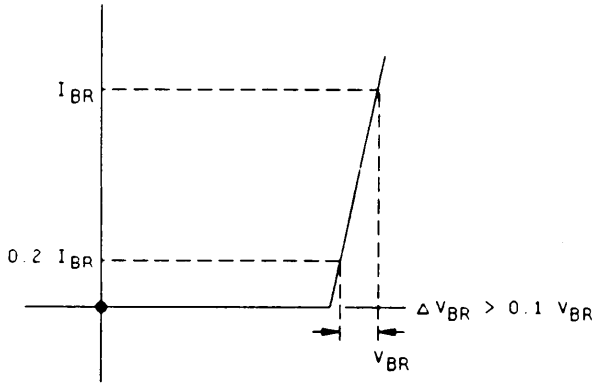

The slope shall be less than 10 percent of V_{BR} when viewed between 20 percent to 100 percent of the specified I_{BR} or I_Z. Lou voltage zeners below 5.5 volts are in exception to this requirement; also or other devices, as may be specified.

FIGURE 4023-4. Slope.

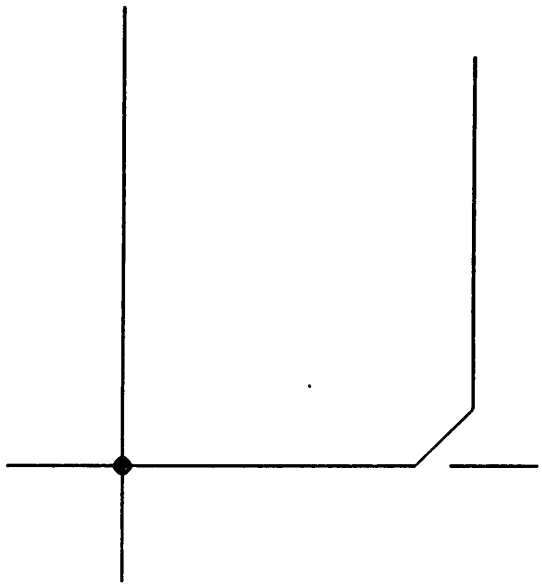

The double break is the area in which the trace transitions from the horizontal to the vertical. Unless otherwise specified, this area should not occupy more than 10 percent of the total horizontal voltage component being viewed, or more than 20 percent of the specified I_{BR} or I_{ZT}. This requirement is not applicable to ultrafast or schottky rectifiers, and low voltage zeners $\leq$ 10 volts.

FIGURE 4023-5. Double break (reject criteria for sharp knee devices).

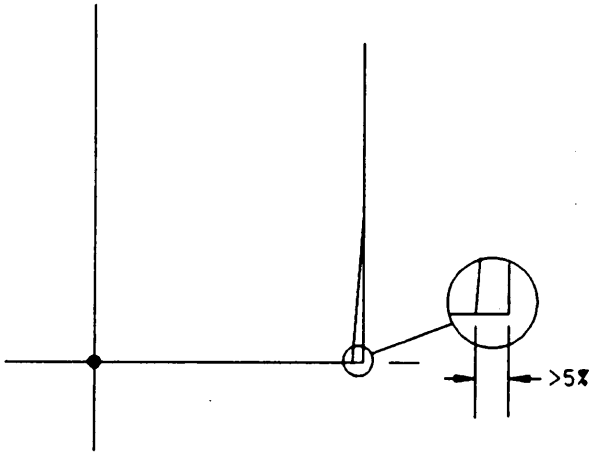

For rectifiers and zeners the region at the knee may display a secondary trace no more than 5 percent of the total voltage of the DUT (see detail),

FIGURE 4023-6. Double trace.

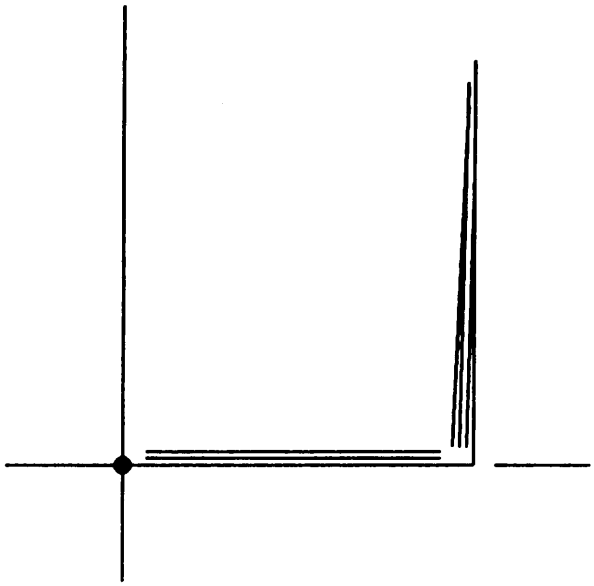

Any jittery movement of the trace in any direction, not caused by power line voltage fluctuations, must not occur.

FIGURE 4023-7. Unstable (jitter).

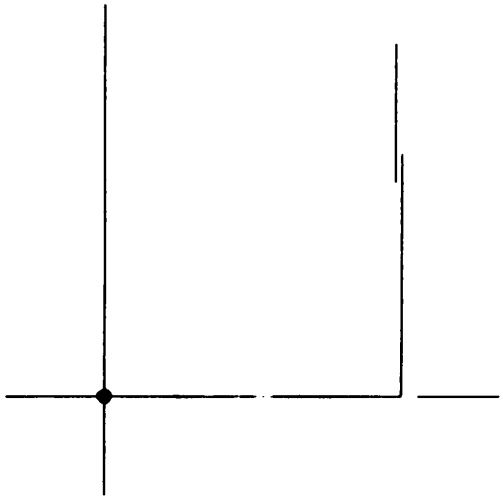

The vertical component must not depart from a single vertical line, except as allowed on figure 4023-5 and 4023-6.

FIGURE 4023-8. Discontinuity.

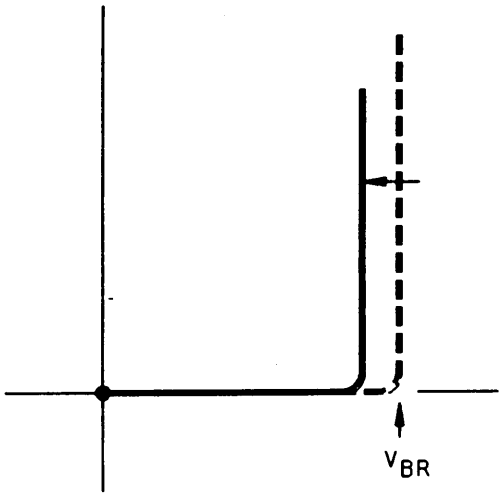

The vertical component must not decrease its value abruptly by 2 percent or more of V_{BR}.

FIGURE 4023-9. Snap back - collapsing V_{BR}.

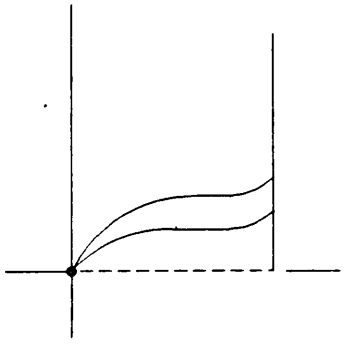

Leakage current (vertical) must not degrade from an initial value.

FIGURE 4023-10. Floater.

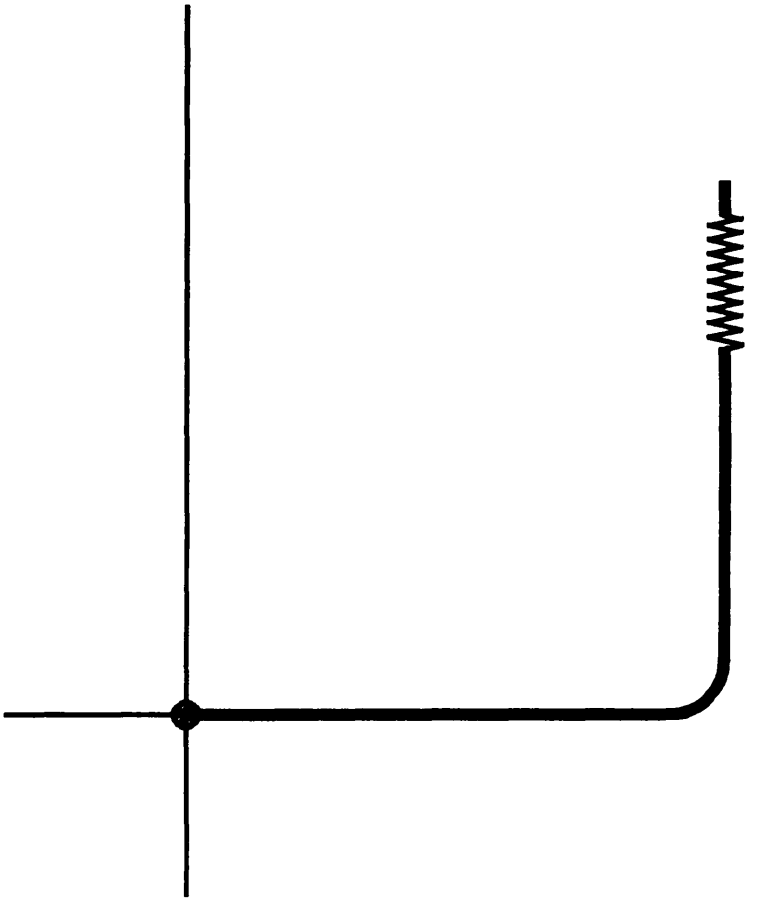

Instability (arcing) appearing at or near the specified I_{BR} region on the vertical trace (such as may be coincident with visible sparking activity within the device die region) must not be present. Noise at or near the knee is permissible, such as typically observed on avalanche-zener devices.

FIGURE 4023-11. Arcing.

METHOD 4026.2

FORWARD RECOVERY VOLTAGE AND TIME

1. Purpose. This test is intended to measure the forward voltage and recovery time of the device. A device reveals an excessive transient forward voltage when it is switched rapidly into the forward conductance region. The amplitude and time duration of this voltage peak can be measured by observing the voltage waveform across the device when a flat-top pulse of the specified amplitude, rise time, pulse width and frequency are applied to the device.

2. Test circuit. See figure 4026-1.

a. The forward transient test circuit shown on figure 4026-1 is used in conjunction with a pulse generator and an output sensing device. Care should be taken to minimize lead length where lead inductance might cause ringing in the test circuit.

b. The value of resistor R_p shall be chosen to optimize the impedance match between pulse generator and test circuit, thereby minimizing the ringing in the test circuit.

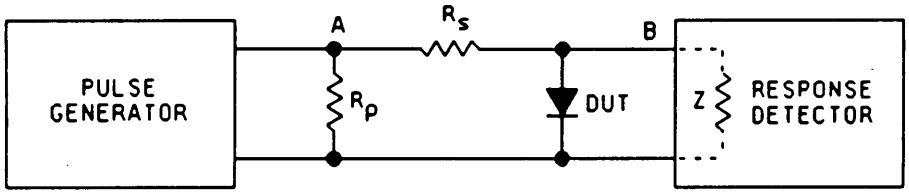

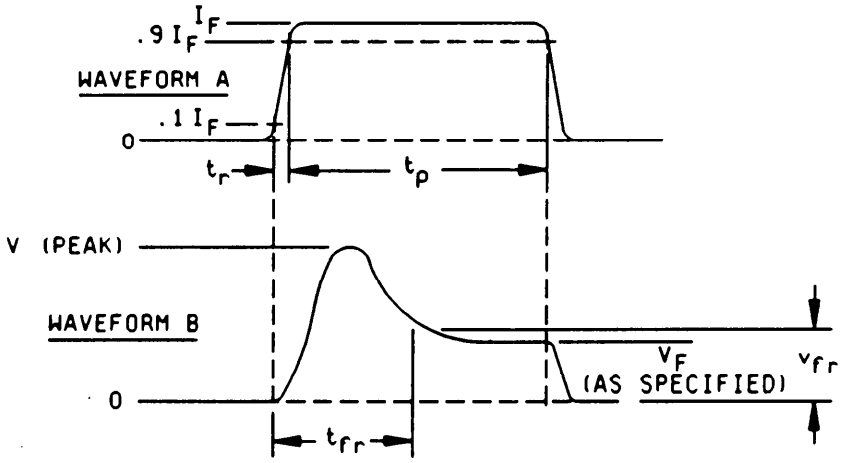

FIGURE 4026-1. Test circuit for forward recovery voltage and. time.

3. Procedure. Test shall be performed using the following:

3.1 Conditions:

a. Pulse input A:

(1) I_F amplitude: As specified.

(2) Rise time = 10 ns or as specified.

(3) Pulse width $t_1 \geq 10X$ specified response time.

(4) Generator resistance R_s 20 RF ($R_F = V_F/I_F$ at specified IF).

(5) Pulse frequency shall be such that a reduction in frequency shall result in no change in forward recovery characteristics.

b. Response detector input inpedance, Z $\geq$ 100 R_F.

4. Summary. The following conditions shall be specified in the detail specification:

a. I_F of input waveform A (see 3.1).

b. Rise time if other than 10 nanoseconds (see 3.1).

c. Forward recovery voltage (V_{fr}) (see figure 4026-1).

d. The following measurements should be made:

Forward recovery time (t_{fr}) (measured from the time forward voltage becomes positive to the time that forward voltage recovers to a specified v_{fr}) (see figure 4026-1).

e. The peak forward voltage $V_{(peak)}$ (see figure 4026-1). This symbol is interchangeable with V_{FM}.

METHOD 4031.3

REVERSE RECOVERY CHARACTERISTICS

1. Purpose. The purpose of this test is to measure the reverse recovery time and other specified recovery characteristics related to signal, switching, and rectifier diodes by observing the reverse transient current versus time when switching from a specified forward current to a reverse biased state in a specified manner.

2. General guide for selecting appropriate condition. Four conditions are given to include recommended practice for the range of diodes considered. A general guide for selecting the appropriate condition letter is:

a. Signal diodes with reverse recovery time less than 6 ns.

b. Low to medium current rectifiers with maximum specified recovery times of 50 to 3,000 ns.

c. High current rectifiers with maximum specified recovery times of 350 ns or greater.

d. Ultra-fast rectifiers, particularly on new specifications.

Further, detailed guidance is given under each condition below.

3. Test condition A. This condition is particularly relevant to low-current, signal diodes faster than 6 ns and tested at 10 mA. However, it is practicable for measurements up to 20 ns and 100 mA.

3.1 Circuit notes for condition A.

a. Rise time of the reverse voltage pulse across a noninductive calibration resistor in place of the DUT shall be less than 20 percent of the recovery time of the DUT, for greatest accuracy.

b. Oscilloscope rise time shall be less than 20 percent of device recovery time, for greatest accuracy.

c. Proper coaxial networks and terminations shall be employed to ensure against error-producing pulse reflections.

d. $R > 10\ R_L$.

e. Unless otherwise specified, $R_L = Z_{PG} + Z_{SCOPE} = 100\ \Omega$

f. $c > 10\ PW \div R_L$.

g. $PW > 2 \times$ maximum specified t_{rr} (see figure 4031-1.)

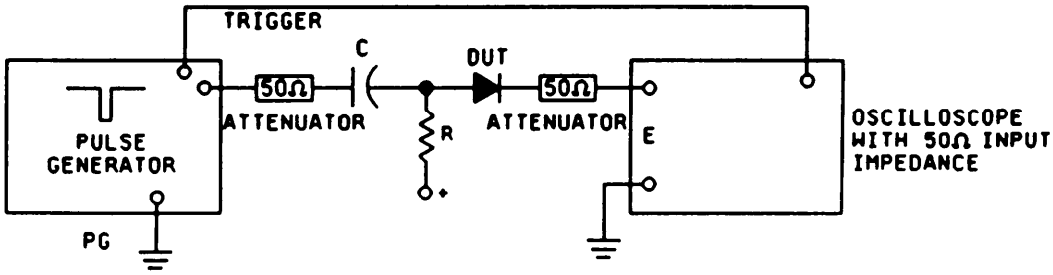

NOTE: The test circuit shall comply with the test conditions as stated under 2.1.
PW = Pulse width of reverse voltage pulse (see figure 4031-2).
R_L = Load resistance.
C = Coupling capacitance.

FIGURE 4031-1. Test circuit for condition A.

3.2 Procedure for condition A. The specified forward current shall be adjusted by resistor R and the + supply. Voltage E, developed across the 50 ohm oscilloscope input impedance shall be measured. Specified forward current shall be calculated by the expression IF = E/50. The time duration of IF shall be at least 10 times the device recovery time. The oscilloscope trace deflection above zero reference shall be adjusted by the oscilloscope vertical sensitivity to produce an amplitude of 2 cm minimum vertical deflection. Adjustment of the reverse transient current (I_{RM}) shall be made by varying the pulse generator output, observing the voltage E across the 50 ohm oscilloscope input impedance, and calculating I_{RM} by the expression I = E/50. When reverse bias voltage V_R is specified, and I_{RM} is not, the DUT shall be replaced with a shorting bar and I_{RM} shall be calculated by the expression $V_R/50$ (see figure 4031-2.)

3.3 Summary for condition A. The following conditions shall be specified in the detail specification:

a. Forward current, IF.

b. Reverse current I_{RM} (preferred), or reverse voltage (optional alternative).

c. Load resistance, if other than 100 Ω (this is the sum of ZPG and ZSCOPE).

d. Ambient temperature in °C.

e. Generator impedance, if other than 50Ω..

f. Recovery current measuring point, $i_{R(REC)}$, if different from 10 percent of I_{RM}.

The following measurement shall be made: t_{rr} (see figure 4031-2).

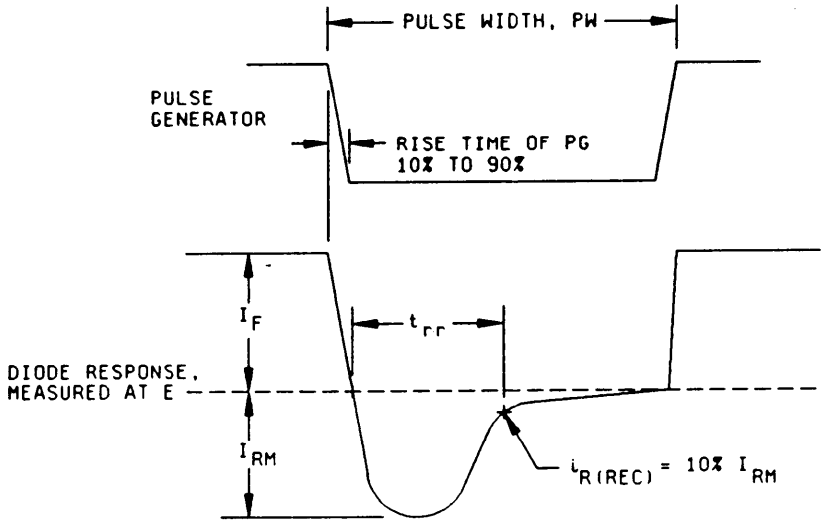

FIGURE 4031-2. Response pulse waveforms for condition A.

4. Test condition B. (See suggested conditions below (e.g., B1, B2).) This condition is particularly relevant to medium current (axial and similar) types of standard and fast rectifiers with maximum specified recovery times between 50 and 3,000 ns that measured at peak forward currents greater than 100 mA and less than or equal to 1.0 ampere. It is readily adapted to lower test currents. This test is also appropriate for devices with recovery times less than 50 ns that are measured at peak forward currents of 1A or less; below 25 ns, or at higher current, particular care must be used to achieve low loop inductance and low circuit rise times to achieve acceptable repeatability.

This condition differs from condition D in that the reverse current (I_{RM}) is limited by the test circuit, not by the DUT.

TABLE 4031-1. Test condition B.

Designation (condition)		B1	B2	B3	B4	B5
Test current, (amperes) (see figure 4031-4)	I_F	0.5	0.5	1.0	1.0	0.01
	I_{RM}	1.0	0.5	1.0	1.0	0.01
	$i_{R(REC)}$	0.25	0.1	0.5	0.1	0.005
Circuit resistor 1/ (ohms)	R_F	33	33	50	50	1200
	R_R	9	9	15	15	200
	R_4	1.00	1.00	1.00	1.00	10.0

1/ Preferred nominal resistance values are shown; modification of RF and R_R may be needed to achieve the rise time of 3.1a and the I_{RM} specified.

4.1 Circuit notes for condition B. The timing and test circuit of figure 4031-3A is a guide to that needed. An equivalent circuit may be used. Figure 4031-3B shows a suggested configuration for R_4. Duty factor shall be 5 percent maximum.

a. The rise time of the reverse voltage pulse across a noninductive calibration resistor in place of DUT shall be less than 20 percent of the recovery time of the DUT.

b. The oscilloscope rise time shall be less than 50 percent of the pulse generator rise time.

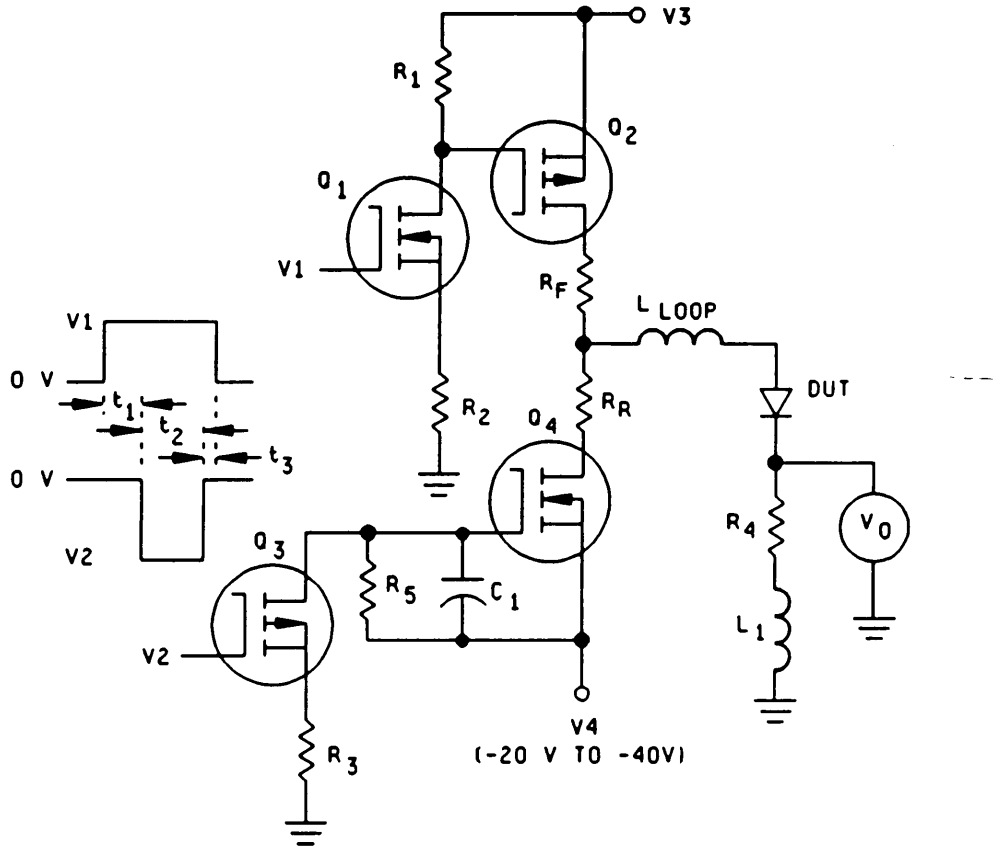

and R_F control forward current I_F.
and R_R control reverse current I_{RM}.
$t_{(max)}$ is the longest to be measured.
$t_{(min)}$ is the shortest expected.

$t_1 > 5\ t_{rr(max)}$.
$t_2 > t_{rr}$.
$t_3 > 0$.
$L_1/R_4 < t_{rr(min)}/10$.
(L_1 is the self inductance of R_4)

FIGURE 4031-3A. Test circuit for condition B.

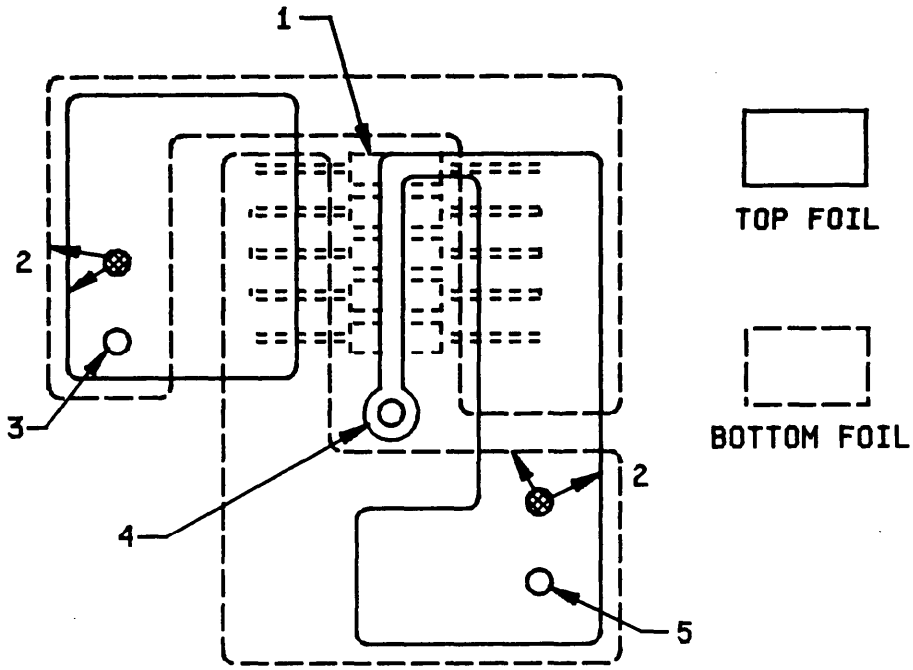

NOTES:

1. Resistor assembly R_4 consists of 10 resistors (1 ohm, .25 W metal film), 5 on top and 5 on the bottom foils. The center of resistor bodies are not shown, and leads are shown dotted so that conducting foils may be more clearly shown. Bottom resistor current flow L to R (-->) is opposite to top current flow R to L (<--), providing magnetic field cancellation. Sense lead to the center conductor of the probe jack exits at right angle to resistor axes and is located between the top and bottom resistor layers.
2. Cross hatched circular areas show the connections between those top and bottom foil regions indicated by arrows.
3. To ground of circuit and probe.
4. To center conductor of miniature probe jack.
5. To cathode of DUT.

FIGURE 4031-3B. Suggested board layout for low L_1/R_4 for condition B.

4.2 Procedure for. condition B. Specified forward current (I_F) shall be adjusted by varying positive voltage, V_3. Reverse current (I_{RM}) shall be controlled by varying the negative voltage, V_4 (see figure 4031-4). With the DUT in place the circuit must be capable of higher than specified I_{RM}; the circuit, and not the diode, must limit I_{RM}.

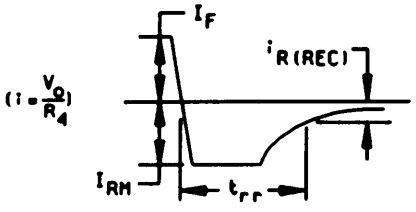

FIGURE 4031-4. Current through DUT (condition B).

4.3 Summary for condition B. The following conditions shall be specified in the detail specif'ication:

a. Test condition (e.g., B1, B2) (see 3.) If not in table 4031-1, specify c, d, and e.

b. Ambient temperature, if other than +25°C.

c. Forward current, I_F.

d. Reverse current, I_{RM}.

e. Load resistances R_F and R_R.

f. Recovery measuring point, $i_{(REC)}$.

→ NOTE: Specify c through f only if not a condition designation in table 4031-1.

The following measurement shall be made: t_{rr} (see figure 4031-4).

5. Test condition C. This test is intended for high current rectifiers with reverse recovery times equal to or greater than 350 ns and test with peak forward currents equal to or greater than 10 amperes.

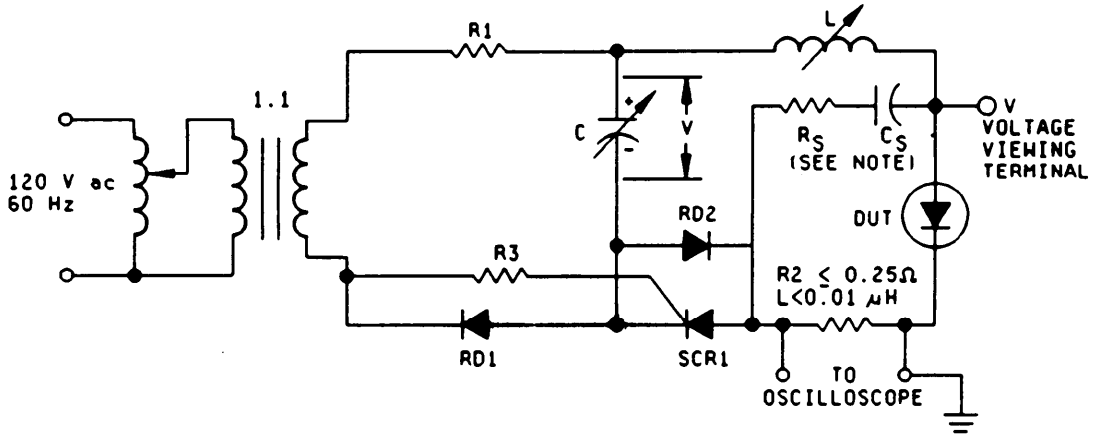

NOTE: R_s and C_s are snubber components, when their use is specified.

FIGURE 4031-5. Circuit for measuring reverse recovery characteristics (condition C).

5.1 Circuit notes for condition C.

a. The circuit is designed to simulate the commutation duty encountered in power rectifier diode circuits while also keeping average power dissipation low to minimize the need for thermal management.

b. The resistance of the C.L. and DUT loop (R_2 and parasitics) is small, e.g., $2\pi\sqrt{L/C}$ much greater than R so the test current will essentially be sinusoidal, possessing a width of $\sqrt{LC}$, a di/dt of V/L and a peak value of $\pi\sqrt{L/C}$. The peak voltage across the capacitor shall be as small as practicable to achieve the desired test conditions. The effects of reverse voltage magnitude on the test device recovery characteristics are neglected.

c. The minimum forward current pulse time (t_p) shall be at least five times the recovery time (t_{rr}) of the DUT so that the di/dt will be linear and of the same value before and after current reversal.

d. The oscilloscope rise time shall be less than 1/5th of t_a or t_b (see figure 4031-6), whichever is less.

e. The inductance of the current viewing resistor shall be extremely low, e.g., 0.01 microhenry. Abrupt recovery rectifiers (figure 4031-6) can cause current oscillations which may be reduced by using a lower inductance current viewing resistor and by properly terminating the oscilloscope cable. A current transformer 1/ with suitable rise time may be substituted for the current viewing resistor. Rectifier diode RD2 provides a very low inductance path around SCR1 if the reverse recovery time of SCR1 is shorter than that of the DUT. An external SCR triggering source may be required to achieve stable triggering.

f. A slight oscillation may appear on the waveform following device recovery. This may be reduced by reducing the current viewing resistor's inductance, or properly terminating the viewing cable. The oscillation, however, does not affect the test results.

g. D_2 and its circuit branch should provide a very low inductance path around the SCR if the reverse recovery time of the SCR is shorter than that of the DUT.

h. R_3 must be sufficiently large such that the SCR triggers only after the capacitor, C, has had ample time to charge to its desired value. If stable triggering or ample charging is a problem, a momentary pushbutton switch may be inserted in line with R_3 to provide triggering. A pulse transformer technique is also acceptable in the triggering circuit.

5.2 Procedure for condition C. C, L, and V are adjusted to obtain the specified test current di/dt and magnitude, I_{FM}. The recovery time for rectifier diodes is defined as $t_{rr} = t_a + t_b$ (see figure 4031-6) t_a is measured from the instant of current reversal to the instant that current reaches its peak reverse value $I_{RM(REC)}$ and t_b is measured from $I_{RM(REC)}$ to the instant the straight line connecting $I_{RM(REC)}$ and 0.25 $I_{RM(REC)}$ intercepts the zero current axis. The recovery time for devices with abrupt recovery characteristics is defined in the same manner except t_b is measured from $I_{RM(REC)}$ to the instant the test current waveform intercepts the zero current axis, if applicable.

1/ Pearson Electronics, Inc. or equivalent types.

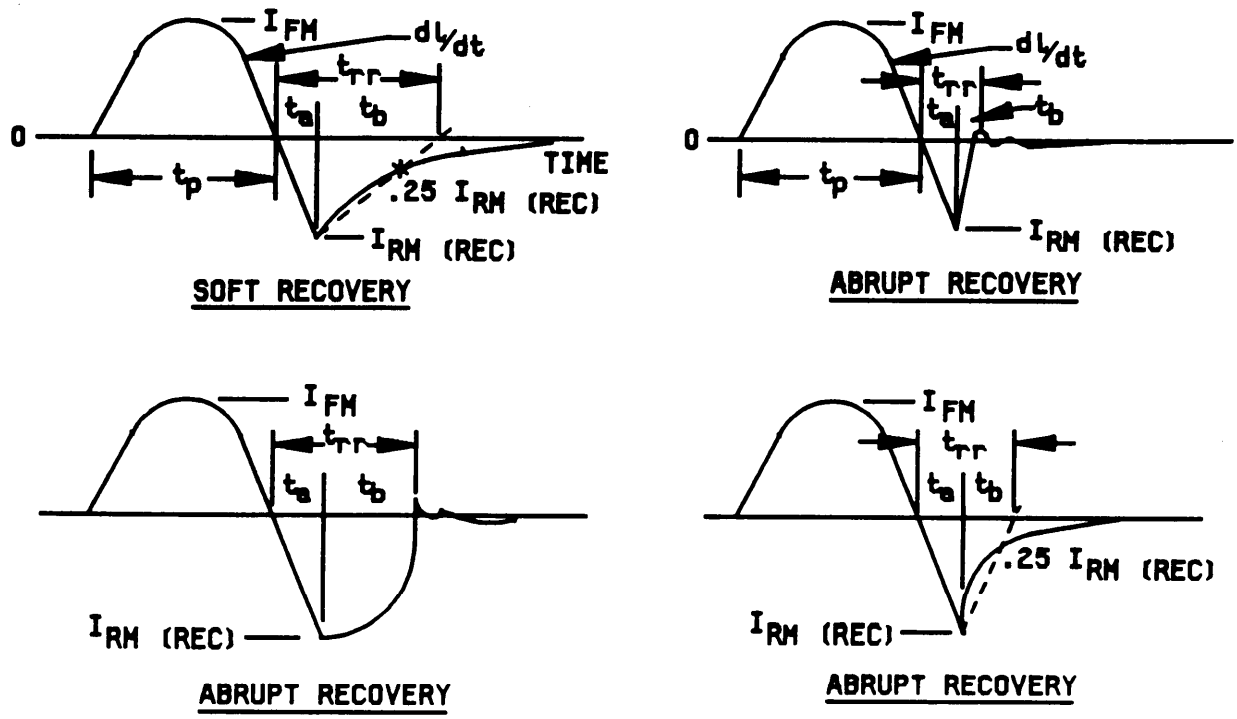

FIGURE 4031-6. Test current waveforms for various types of rectifier diodes under test in the circuit for measuring reverse recovery characteristics.

5.3 Summary for condition C.

a. The following conditions shall be specified in the detail specification:

(1) Case temperature in ‘C.

(2) Test repetition rate, in Hz.

(3) Peak forward current, I_{FM}, in amperes.

(4) Rate of decrease of forward current, di/dt, in A/µs.

(5) Minimum test current pulse width, tp, in microseconds. (Duty cycle shall be $\leq$ one percent).

b. The following characteristics shall be specified for measurement in the detail specification as required:

(1) Reverse recovery time (defined as $t_{rr} = t_a + t_b$), t_a, t_b.

(2) Reverse recovery current, $I_{RM(REC)}$, in amperes.

6. Test condition D. (See suggested conditions (e.g., D1, D2, D3) in table 4031-11.) This condition is intended for ultra-fast medium current rectifiers (axial and case mount, or equivalent styles) measured at $I_F \geq 1$A and with reverse recovery time $\leq$ 100 ns. With good engineering practice, condition D can adequately measure t_{rr} down to about 10 ns; it can also utilize I_F up to at least 10 A.

TABLE 4031-II. Test condition D.

Device ratings		Designation (condition)	Values for testing	
I_O or I_F (AV) (A)	t_{rr} (ns)		I_F (A)	di/dt (A/s)
1 to 4	> 65 to 100	D1	2	100
to 20	> 65 to 100	D2	6	100
over 20	> 65 to 100	D3	10	100
1 to 4	≤ 65	D4	2	200
to 20	≤ 65	D5	6	200
over 20 1/	≤ 65	D6	10	200

1/ For devices with substantially higher rated current it is desirable to use test condition for I_F close to rated current, and higher values of di/dt.

6.1 Test circuit. Refer to figures 4031-7 and 4031-8 for timing and circuit details. Equivalent circuits may be used. The forward current generator consisting of Q_1, Q_2, R_1, and R_2 may be replaced with any functionally equivalent circuit. Likewise, the current-ramp generator consisting of Q_3, Q_4, R_3, and C_1. The duty factor shall be $\leq$ 5 percent.

a. This method presumes that good engineering practice will be employed in the construction of the test circuit, e.g., short leads, good ground plane, minimum inductance of the measuring loop and minimum self-inductance (L_1) of the current sampling resistor (R_4). Also, appropriate high speed generators and instruments must be used.

b. The measuring-loop inductance (L_{LOOP}, see figure 4031-7) represents the net effect of all inductive elements, whether lumped or distributed, e.g., bonding wires, test fixture, circuit board foil, inductance of energy storage capacitors. The value of L_{LOOP} should be 100 nH or less. The reason for controlling this circuit parameter is that it, combined with diode characteristics including CT, determines the value of t_b.

c. The turn-off reverse-voltage overshoot shall not be allowed to exceed the device rated breakdown voltage. Ringing and overshoot may become a problem with $R_{LOOP} < 2\sqrt{(L/C)}$, ; where $L = L_{LOOP}$. That is another reason for minimizing L_{LOOP}.

d. Regarding breakdown voltage, $-V_4$ should be kept as low as practicable, especially when test low voltage devices. A value of approximately 30 volts is recommended.

e. The self-inductance of the current-sample resistor R_4 (see figure 4031-8) must be kept low relative to t_a because the observed values of t_a and I_{RM} increase with increasing self-inductance. Since the value of R_4 is not specified, the recommended maximum inductance is expressed as a time constant (L_1/R_4) with a maximum value of t_a(minimum)/10, where t_a(minimum) is the lowest t_a value expected. This ratio was chosen as a practical compromise and would yield an observed t_a which is 10 percent high ($\Delta t_a = L_1/R_4$). The I_{RM} error is a function of the L_1/R_4 time constant and di/dt. For a di/dt of 100 A/µs the observed I_{RM} would also be 10 percent high. $\Delta I_{RM} = L_1/R_4$ di/dt.

f. The di/dt of 100 A/µs was chosen so as to provide reasonably high signal levels and still not introduce the large I_{RM} errors caused by higher di/dt. Higher values of di/dt, without large errors, can be achieved with lower L_1/R_4.

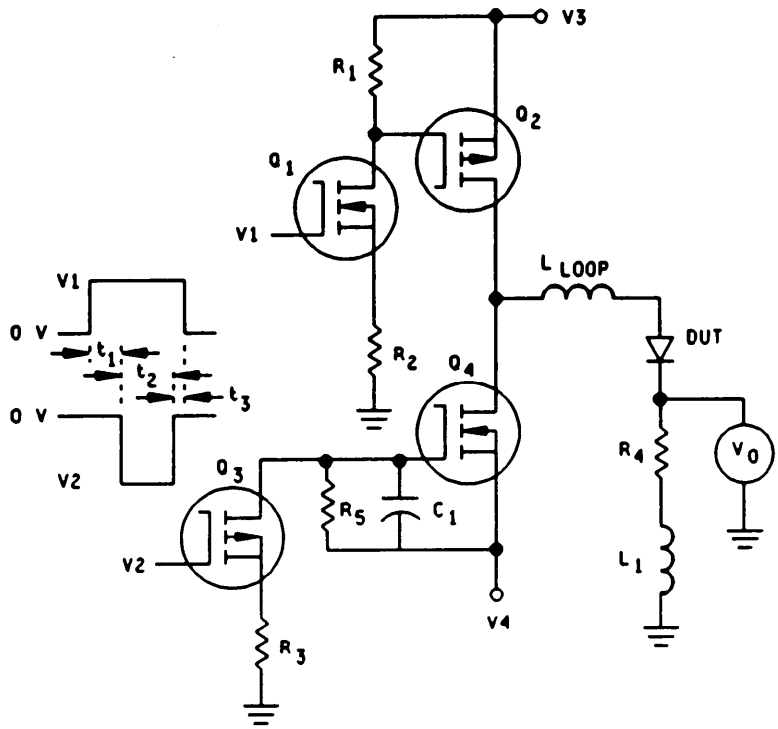

V_1 amplitude controls forward current (I_F).
V_2 amplitude controls di/dt.
$t_{a(max)}$ is the longest t_a to be measured.
$t_{a(min)}$ is the shortest t_a to be measured.

$t_1 > 5\ t_{a(max)}$.
$t_2 > t_{rr}$.
$t_3 > 0$.
$L_1/R_4 < t_{a(min)}/10$.
L_1 is the self induction of R_4.

FIGURE 4031-7. t_{rr} test circuit for condition D.

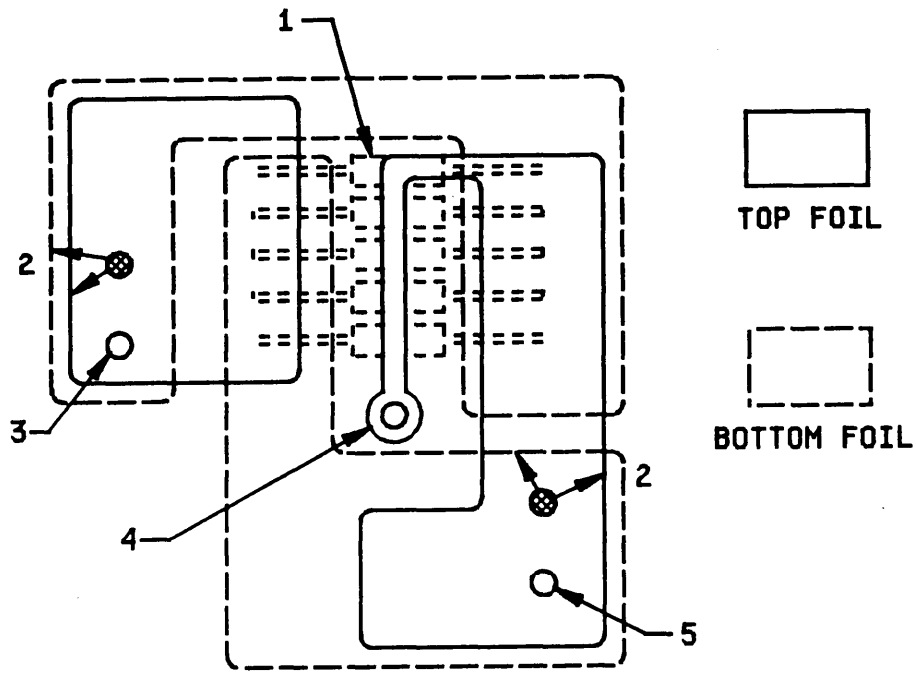

NOTES:

1. Resistor assembly R_r is made from 10 resistors (1 ohm, .25 W metal film), 5 on top and 5 on the bottom foils. The center of resistor bodies are not shown, and leads are shown dotted so that conducting foils may be more clearly shown. Bottom resistor current flow L or R (-->) is opposite to top resistor current flow R to L (<--), providing magnetic field cancellation. Sense load to the center conductor of the probe jack exits at right angle to resistor axes and is located between the top and bottom resistor layers.
2. Crosses hatched circular areas show the connections between those top and bottom foil regions indicated by arrows.
3. To ground of circuit and probe.
4. To center conductor of miniature probe jack.
5. To cathode of DUT.

FIGURE 4031-8. Suggest board layout for low L_i/R_i for condition D.

6.2 Procedure for condition. Adjust V_1 for the specified forward current, I_F. Adjuct $-V_2$ for the specified di/dt (see figures 4031-7 and 4031-9).

6.3 Summary for condition D.

a. The following conditions shall be specified:

(1) Designation (condition, see table 4031-11). If another is desired, 4 and 5 must be specified.

(2) $-V_4$, reverse ramp power supply voltage.

(3) T_C, case temperature, if other than +25°C.

(4) I_F, .25 (minimum) of the continuous rated current is the suggested alternative (see table 4031-11).

(5) di/dt, 100 A/µs is the suggested alternative (see table 4031-11).

b. The following characteristics shall be specified for measurement:

(1) Reverse recovery time, t_{rr} (see figure 4031-9).

(2) $I_{RM(REC)}$ (see figure 4031-9).

NOTE: An additional measurement, t_a may be made if desired to compute $t_b = t_{rr} - t_a$, and the recovery softness factor, RSF = t_b/t_a.

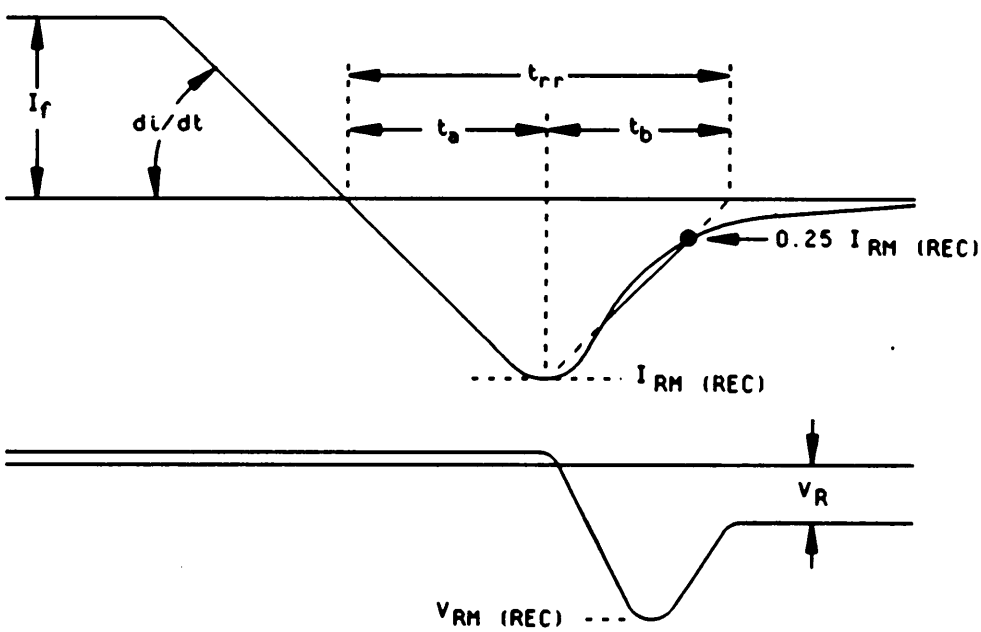

FIGURE 4031-9. Generalized reverse recovery waveforms for condition D.

METHOD 4036.1

"Q" FOR VOLTAGE VARIABLE CAPACITANCE DIODES

1. Purpose. The purpose of this test is to measure the quality factor (Q) of the device. By definition, Q expresses the ratio of reactance to effective resistance of the device, under rf signal conditions and specified dc bias conditions.

2. Test circuit. See figure 4036-1.

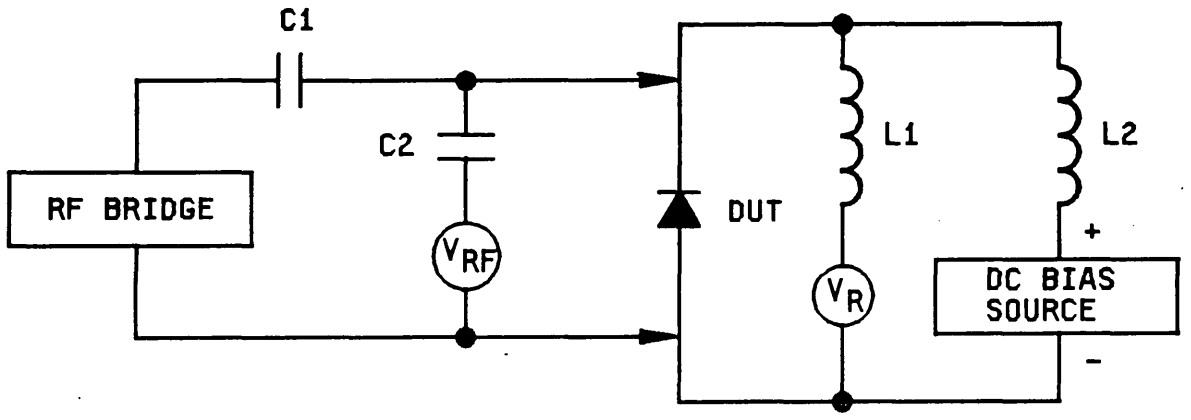

NOTE: The impedance of C1, C2, and L1, L2 shall be small and large, respectively, compared to the DUT at the frequency of measurement.

FIGURE 4036-1. Test circuit for measuring Q.

3. Procedure. The test equipment shall be connected as shown in figure 4036-1. The dc bias supply shall be adjusted for the specified voltage where Q is to be measured. Unless otherwise specified, the rf level shall be adjusted to 50 mV (rms). The parallel resistance Rp and capacitance Cp of the test device shall be measured using rf bridge methods. Unless otherwise specified, the point of measurement shall be .062 inch (1.57 mm) from the device body. Q shall be calculated using the following formula: $Q = 2\pi f R_p C_p$.

4. Summary. The following conditions shall be specified in the detail specification:

a. Test frequency.

b. Reverse dc bias (V_R).

c. RF level if other than 50 mV (rms).

d. Required "Q".

METHOD 4041.2

RECTIFICATION EFFICIENCY

1. Purpose. The purpose of this test is to measure rectification efficiency which is the ratio of dc output voltage to peak ac input voltage.

2. Test circuit. See figure 4041-1.

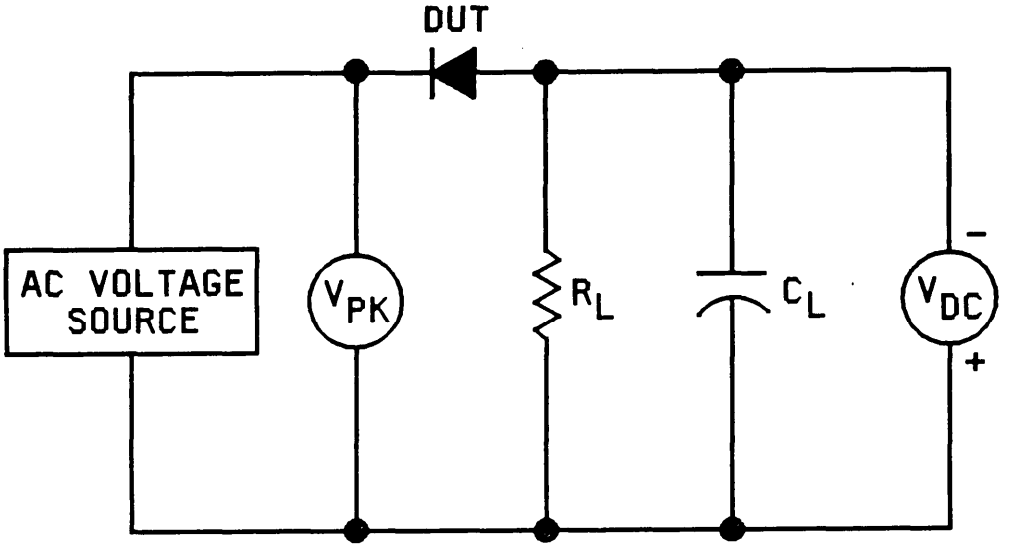

NOTE: The voltmeter shall have a high impedance as compared with the load circuit of R_L and C_L.

FIGURE 4041-1. Test circuit for rectification efficiency.

3. Procedure. The ac signal shall be adjusted to the specified frequency and signal level measured by means of peak reading voltmeter (V_{pk}). The rectified output voltage shall be measured by means of voltmeter (V_{DC}).

$$\text{Rectification efficiency (\%)} = \frac{V_{DC}}{V_{pk}} \times 100$$

4. Summary. The following conditions shall be specified in the detail specification:

a. Load capacitor (CL) and load resistor (R_L).

b. Frequency and amplitude of ac source.

METHOD 4046.1

REVERSE CURRENT, AVERAGE

1. Purpose. This test is designed to measure the average reverse current through the device under the specified conditions.

2. Test circuit. See figure 4046-1.

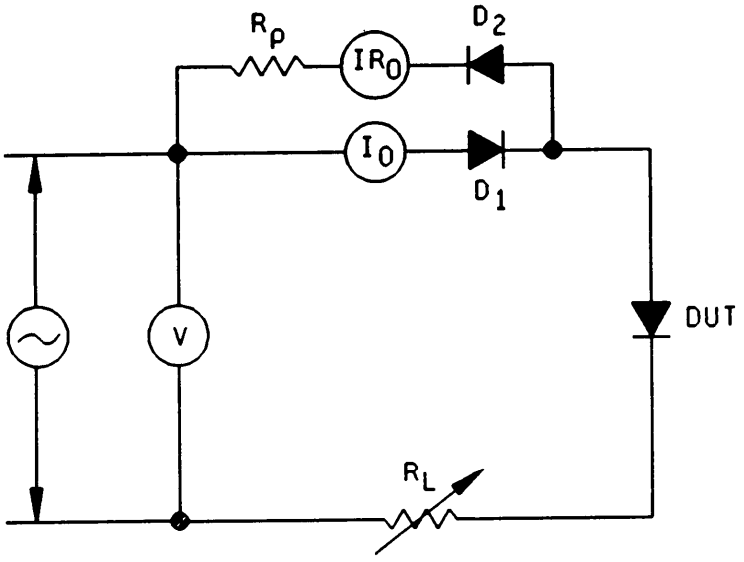

NOTE: The reverse leakage current at each device D_1 and D_2 must be less than .05 percent of the maximum allowable specified leakage current of the DUT. In other respects, the devices D_1 and D_2 should be of the same type as the DUT.

FIGURE 4046-1. Test circuit for reverse current, average.

3. Procedure. After thermal equilibrium, at the temperature specified, the specified voltage shall be applied.

4. Summary. The following conditions shall be spedified in the detail spedification:

a. Test temperature,, when required (see 3.).

b. Test voltage (see 3.).

METHOD 4051.3

SMALL-SIGNAL REVERSE BREAKDOWN IMPEDANCE

1. Purpose. The purpose of this test is to measure the reverse breakdown impedance of the device under small-signal conditions.

2. Test circuit. See figure 4051-1.

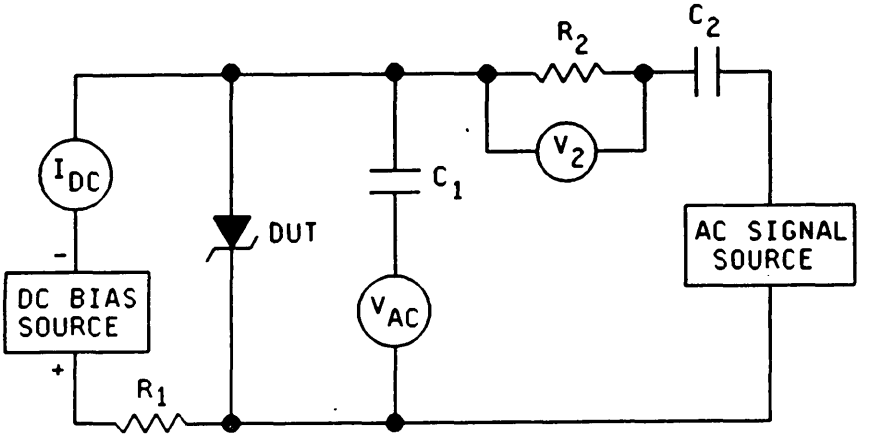

NOTES:
1. The impedances of C1 and C2 shall be small compared to the DUT at the test frequency.
2. Voltmeters V_{AC} and V_2 shall be high input impedance rms types.
3. The resistance of RI shall be large compared with the breakdown impedance being measured.
4. A low pass filter may be installed in series with the ac signal source.

FIGURE 4051-1. Test circuit for small-signal reverse breakdown impedance.

3. Procedure. The specified reverse direct current shall be applied to the DUT. An ac signal in the frequency range of 45 through 1,000 Hz shall be applied to the DUT through coupling capacitor C2. Detail specification limits for Z_{ZT} shall apply at 45 through 60 Hz. Tests at frequencies greater than 60 Hz shall be corrected to those readings taken at 45 through 60 Hz. This current shall be 10 percent of the value of the dc breakdown current through the DUT. The small-signal impedance shall be determined as follows:

$$Z_{ZT} = \frac{V_{(RMS)}}{I_{(RMS)}} = \frac{V_{AC}\ R_2}{V_2}$$

4. Summary. Unless otherwise specified in the detail specification, the following conditions shall apply:

a. DC and ac test currents.

b. Test frequency, if other than 45 to 1,000 Hz.

METHOD 4056.2

SMALL-SIGNAL FORWARD IMPEDANCE

1. Purpose. The purpose of this test is to measure the forward impedance of the device under small-signal conditions.

2. Test circuit. See figure 4056-1.

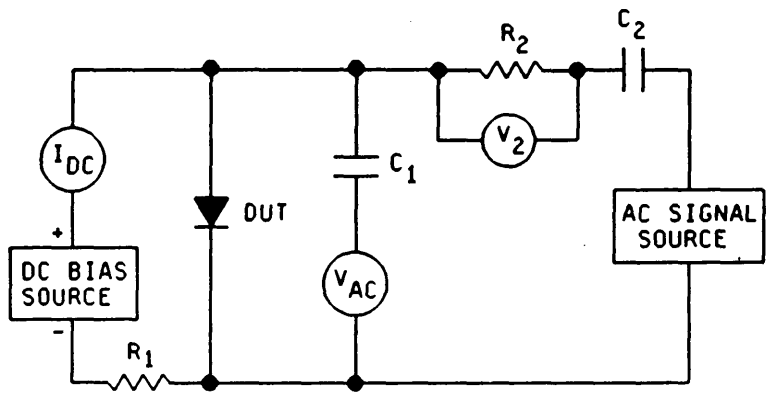

NOTES:
1. The impedances of C1 and C2 shall be small compared to the DUT at the test frequency.
2. Voltmeters V_{AC} and V_2 shall be high input impedance types.
3. The resistance of R1 shall be large compared with the forward impedance being measured.
4. A low pass filter may be installed in series with the ac signal source.

FIGURE 4056-1. Test circuit for small-signal forward impedance.

3. Procedure. The specified forward direct current shall be applied to the DUT. An ac signal in the frequency range of 45 through 1,000 Hz shall be applied to the DUT through coupling capacitor C2. Detail specification limits for Z_f shall apply at 45 through 60 Hz. Tests at frequencies greater than 60 Hz shall be corrected to those readings at 45 through 60 Hz. This current shall not be greater than 10 percent of the value of the dc forward current If. The small-signal impedance shall be determined as follows:

$$Z_f = \frac{V_{(RMS)}}{I_{(RMS)}} = \frac{V_{AC}\ R_2}{V_2}$$

4. Summary. The following conditions shall be specified in the detail specification:

a. DC and ac test currents.

b. Test frequency, if other than 45 to 1,000 Hz.

METHOD 4061.1

STORED CHARGE

1. Purpose. The purpose of this test is to measure directly the charge recovered from a semi-conductor diode when it is rapidly switched from a forward biased condition to a reverse biased condition.

2. Test circuit. See figure 4061-1.

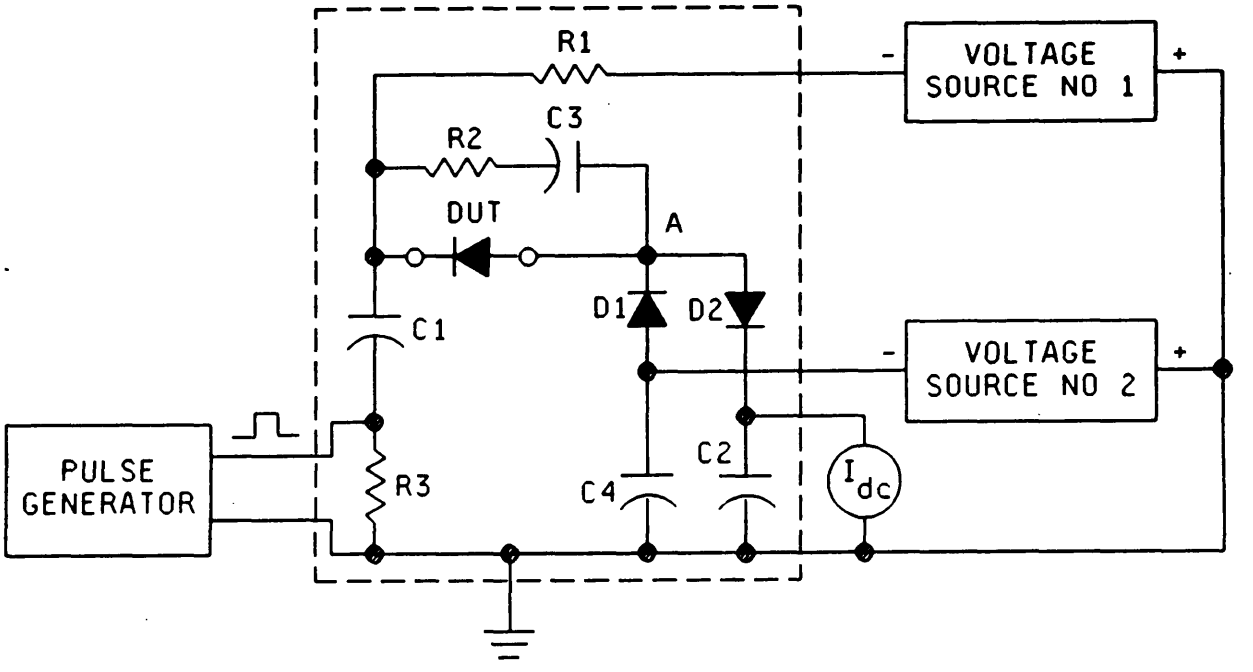

FIGURE 4061-1. Test circuit for stored charge.

3. Test precautions.

a. The diode under test is forward biased by the current flowing from voltage source number 2 through diode D1 and through resistor RI to voltage source number 1. The diode under test is periodically reverse biased by the pulse from the generator and the charge stored in the diode is caused to flow through diode D2 and is measured on the current meter. A similar measurement is made at zero bias current to determine the component of charge resulting from the diode capacitance and the stray circuit capacitance. The stored charge can then be computed from the current readings and the pulse frequency.

b. Resistor RI should be large enough to ensure a constant current through the diode under test. Capacitor Cl should be large enough to maintain a nearly constant voltage across the diode under test during the pulse. The output impedance of the pulse generator including R3 should have a low value, preferably 10 to 25 Ω. The rise time of the pulse should be short enough and the pulse length should be long enough so that further change will not alter the measurement results.

c. Diode D1 should have a much smaller stored charge than the diode under test. Diode D2 should have a fast turn on time, a low dynamic resistance at high currents, and a low reverse leakage current. Capacitors C2 and C4 should have low inductance and should be of sufficient capacitance so that a further increase in their values would not alter the measurement results. The current meter should be of sufficiently low impedance that the average voltage drop across it during any test does not exceed 10 millivolts. Capacitor C3 should be of sufficient size that a small current will flow through the current meter with the diode under test removed. Resistor R2 should have approximately the same value as the output impedance of the pulse generator.

d. The portion of the circuit within the dotted lines should be constructed in accordance with good practices for high speed pulse circuits. Particular attention should be paid to minimizing the circuit inductance including the connections to the diode under test. The capacitance between point A and ground should be made as small as possible.

4. Test procedure.

a. Adjust the pulse generator for the desired amplitude, pulse width, and frequency (f). Set voltage source one to zero. Insert the diode under test and adjust voltage source two for the specified voltage from point A to ground as measured on a high impedance voltmeter. A common value used for this voltage is -0.6 volts. Read the current, I_1, flowing through the current meter.

b. Set voltage source one for the specified forward current through the diode under test. Adjust voltage source two for the specified voltage from point A to ground. This voltage must be the same as used in 3.1. Read the current, I_2, flowing through the current meter.

c. The stored charge is given by:

$$Q_S = \frac{I_2 - I_1}{f}$$

5. Summary. The following conditions shall be included in the detail specification:

a. The bias current If at which the stored charge measurement is made (see 4.).

b. Pulse generator rise time (1 percent to 50 percent), amplitude, width, impedance, and frequency (see 4.).

METHOD 4066.3

SURGE CURRENT

1. Purpose. The purpose of this test method is to subject the DUT to high forward current stress conditions to determine the ability of the device chip and contacts to withstand current surges.

2. Applicability. This test method describes two different approaches to applying high current/voltage stress conditions. The first method uses half sinusoidal forward current surges, at low duty factor, applied to either a baseline ac or dc. It is intended primarily for lot sample assurance tests. The second method uses rectangular current pulse(s) and is intended primarily for 100 percent screening where applicable.

Unless specifically stated otherwise in the device specifications, the condition chosen shall be applicable to the particular device and test intent; high current devices may use condition C.

3. Definitions. The following symbols and terms shall apply for the purpose of this test method.

a. I_o: Average ac forward current (in A).

b. I_F: DC forward current (in A).

c. $i_{f(surge)}$: Peak value of surge current (in A).

d. $I_{F(surge)}$: DC surge current (in A).

e. V_{RSM}: Nonrepetitive maximum reverse voltage (in V).

f. $V_{RM(wkg)}$: Working maximum reverse voltage (in V).

g. $V_{F(surge)}$: DC surge voltage (in V).

h. n: Number of pulses.

i. t_p: Duration of current surge pulses (in ins).

j. Duty factor: Applied current surge pulses (in percent).

4. Condition A, sinusoidal current surge.

4.1 Apparatus. (As required).

4.2 Procedure. The continuously-applied electrical conditions shall be specified and applied to the device under the specified conditions. Unless otherwise specified, the specified number of current pulses (n) shall be superimposed on the continuously-applied electrical conditions at the specified duty factor in accordance with figure 4066-1 (condition Al) for rectifiers, or figure 4066-2, (condition A2) for signal and switching diodes, zeners, bridges, as applicable. The surge pulses shall be half-sine waveform and of specified duration (t_p). The duty factor shall be so chosen that the junction temperature is not changed significantly,

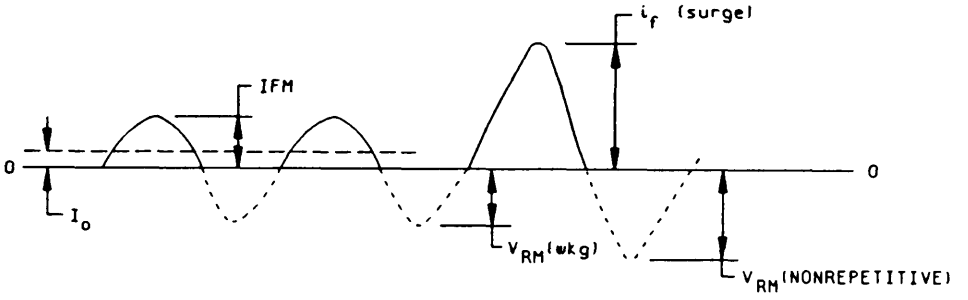

FIGURE 4066-1. Surge pulse applied to continuous halfwave conditions (condition Al).

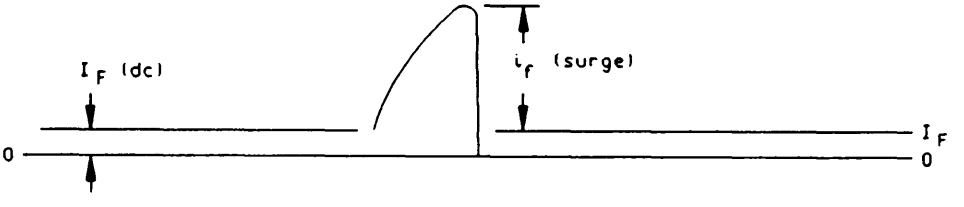

FIGURE 4066-2. Surge pulse applied to continuous dc conditions (condition A2).

4.3 Test conditions to be spedified and recorded. The following conditions shall be spedified in the detail spedification:

a. Average forward current I_o; or forward current (dc), I_F; as applicable.

b. Number of current pulse (n).

c. Duration of pulses (t_p), normally 8.3 milliseconds.

d. Duty cycle of pulse, normally less than one percent, or the period (normally between 6 and 60 seconds.

e. Peak value of current pulse ($i_{f(surge)}$), normally full rated.

f. Nonrepetitive maximum reverse voltage (V_{RSM}), when applicable.

g. Measurements after test.

h. Case, lead, or ambient temperature (T_C, T_L, or T_A), as applicable.

5. Condition B, rectangular current pulse.

5.1 Apparatus. The current source (I) and switch (SW) combination shown on figure 4066-3 shall be able to apply the peak value of current pulse ($I_{F(surge)}$) for the pulse duration (t_p) as required in the transitions from off-to-on and from on-to-off in a time period less tha 10 percent of the pulse duration (tp) and shall be able to handle any number of pulses (n) and duty cycle as required in the detail specification.

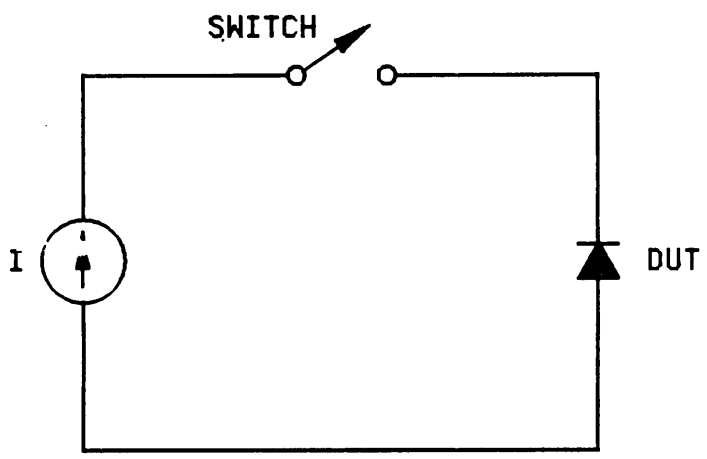

FIGURE 4066-3. Rectangular current pulse test setup.

5.2 Procedure. As shown on figure 4066-4, no current is applied to the DUT prior to the starting time (to) of the test. At to, SW causes the application of $I_{F(surge)}$ for time period t_p, after which SW causes the current to cease flowing in the DUT. For multiple pulse requirements, SW again causes current flow in the DUT after being off for a time necessary to meet the duty cycle requirements; this process is repeated for n times as specified. The duty cycle and pulse width (t_p) shall be chosen to ensure that the DUT junction temperature is not changed significantly.

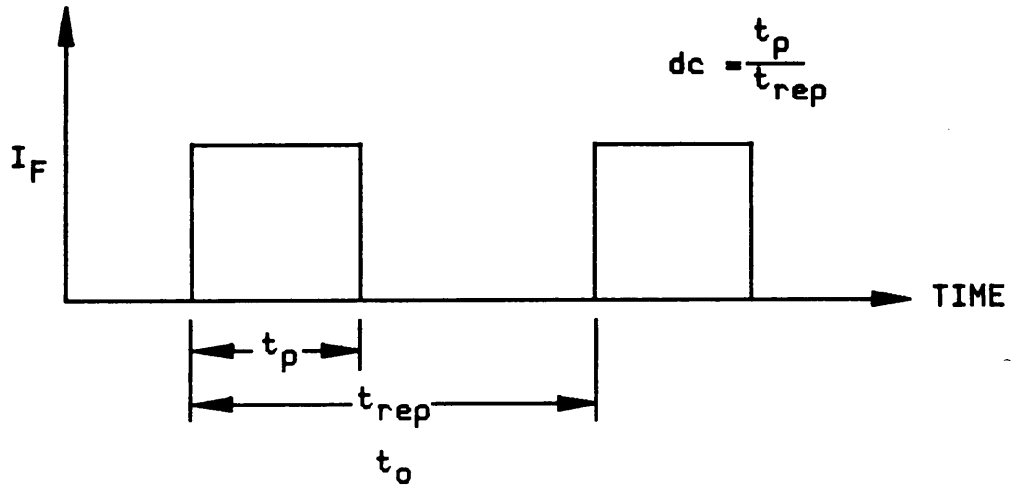

FIGURE 4066-4. Rectangular current pulse waveforms.

5.3 Test conditions to be specified and recorded. The following conditions shall be specified in the detail specification:

a. DC value of current pulse ($I_{F(surge)}$), normally the same RMS current as the rated half sine condition.

b. Number of current pulses (n), suggest between 2 and 6.

c. Duration of pulses (t_p), suggest 8.3 ms (to achieve same results as referenced in 5.3a).

d. Duty cycle of pulses, normally less than one percent.

e. Measurements after test (see 6.1).

5.4 Alternative to measurements after test. There is a minor modification to the test method that offers the advantage of immediately determining if the DUT survived the test. This consists of monitoring the forward voltage ($V_{F(surge)}$) during t_p to determine if device degradation, open-circuit or short-circuit conditions occur. A recorded value of $V_{F(surge)}$ can be compared to minimum and maximum values in the detail specification to determine if the device survived the test.

6. Condition C (with external heating). The worst case test condition for surge current is for device junction temperature at the rated maximum allowable junction temperature. Test condition A approximates this condition by applying forward current to dissipate power in the DUT. The product of this power dissipation and the device thermal impedance produces a temperature rise of the junction over the case temperature at which the surge test is performed. This represents what actually happens to a device in use. However, the actual junction temperature during the surge current test is only at the rated allowable maximum for those individual devices which have both the worst case maximum forward voltage drop and the worst case maximum thermal impedance. Only a very small percentage of actual devices will truly be worst case. The vast majority of devices will be tested at junction temperatures below rated maximum.

Test condition C avoids this short fall in junction temperature and truly represents worst case operation by externally heating the DUT to the specified rated maximum operating junction temperature of the DUT. Consequently there is no applied forward heating current prior to or concurrent with the surge current. Once the DUT has stabilized at thermal equilibrium at the specified maximum operating junction temperature, the desired surge current pulses are applied at the specified duty cycle. The time between current surges must be long enough to permit the device junction temperature to return to its original thermal equilibrium.

7 Summary. The following conditions shall be specified in the individual specification:

a. Test condition letter.

b. Case temperature, T_c.

c. Average forward current, I_o; or forward current (de), IF; as applicable (1_o = O for test conditions B and C).

d. Number of current pulses (see 3.).

e. Duration of pulses (see 3.).

f. Duty cycle of pulses.

g. Peak value of current pulse, $i_{f(surge)}$ or I_{TSM}.

h. Maximum reverse voltage (non-repetitive), V_{RSM}. (V_{RSM} = O for conditions A2, B, and C.)

1. Measurements after test.

METHOD 4071.1

TEMPERATURE COEFFICIENT OF BREAKDOWN VOLTAGE

1. Purpose. The purpose of this test is to measure the permperature coefficient of breakdown voltage under specified conditions.

2. Apparatus. The apparatus used to measure the temperature coefficient of breakdown voltage shall be capable of demonstrating device conformance to the minimum requirements of the individual specification.

3. Procedure. The temperature coefficient of breakdown voltage is the percent of the voltage change from the breakdown voltage obtained at the specified reference temperature to the breakdown voltage obtained at the specified test temperatures.

α_{VZ} shall be calculated using the following formula:

$$\alpha_{VZ} = \frac{V_{(BR)(Test\ temperature)} - V_{(BR)(Reference\ temperature)}}{V_{(BR)(Reference\ temperature)}} \times \frac{100}{T_{Test} - T_{Ref}} \text{ in } \%/^{\circ}C$$

Where the reference temperature is the actual ambient (+25°C ±3°C) and the test temperature is the extreme temperature employed in the measurement.

4. Summary. The following conditions shall be specified in the detail specification:

a. Temperatures.

b. Test current.

METHOD 4076.1

SATURATION CURRENT

1. Purpose. The purpose of this test is to measure the saturation current under the specified conditions.

2. Test circuit. See figure 4076-1.

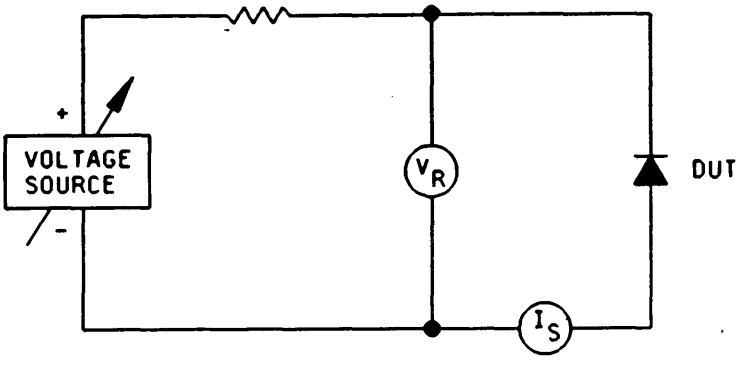

FIGURE 4076-1. Test circuit for saturation current.

3. Procedure. The supply voltage is adjusted until the specified reverse voltage across the diode is achieved. The saturation current is then read from the current meter. Unless otherwise specified, the reverse voltage for measurement of saturation current shall be approximately 80 percent of the nominal breakdown voltage for voltage regulator diodes and approximately 80 percent of the minimum breakdown voltage for rectifiers.

4. Summary. The test voltage (see 3.) shall be specified in the detail specification:

METHOD 4081.2

THERMAL RESISTANCE OF LEAD MOUNTED DIODES (FORWARD VOLTAGE, SWITCHING METHOD)

1. Purpose. The purpose of this test is to determine the thermal resistance of lead mounted diodes under the specified conditions.

1.1 Definitions. The following symbols shall apply for the purpose of this test method:

a. $R_{\Theta JR}$: Thermal resistance, junction-to-reference point, in degrees Celsius/watt.

b. T_J: Junction temperature in degrees celsius.

c. T_R: Reference point temperature in degrees celsius.

d. P_H: Magnitude of heating power in watts applied to diode causing temperature difference T_J - T_R.

e. P_c: Magnitude of power in watts applied to diode during measuring and calibration.

f. I_M: Measuring current in milliamperes.

g. V_{MH}: Value of temperature-sensitive parameter in millivolts, measured at I_M, and corresponding to the temperature of the junction heated by PH.

h. T_{MC}: Calibration temperature in degrees celsius, measured at reference point.

i. V_{MC}: Value of temperature-sensitive parameter in millivolts, measured at I_M and specific value of T_{MC}.

j. T_{LC}: Lead temperature in degrees celsius, measured at the reference point prior to application of heating power PH.

k T_{LH}: Lead temperature in degrees celsius, measured at the reference point after the junction has been heated by PH.

l. D: Heating power duty factor.

2. Apparatus. The apparatus required for this test shall include the following as applicable to the specified test procedure.

a. Thermocouple material shall be copper-constantan (type T) or equivalent, for the temperature range -180°C to +370°C. The wire size shall be no larger that AWG size 30. The junction of the thermocouple shall be welded to form a bead rather than soldered or twisted. The accuracy of the thermocouple and associated measuring system shall be ±0.5°C.

b. Controlled temperature chamber or heat sink capable of maintaining the specified reference point temperature to within ±0.5°C of the preset (measured) value.

c. Suitable electrical equipment as required to provide controlled levels of conditioning power and to make the specified measurements. The instrument used to electrically measure the temperature-sensitive parameter shall be capable of resolving a voltage change of 0.5 mV. An appropriate sample-and-hold unit or a cathode ray oscilloscope shall be used for this purpose.

3. Procedure. In measuring thermal resistance, the forward voltage is used as the temperature-sensitive parameter (TSP) to indicate the junction temperature (see figure 4081-2 for mounting arrangement).

a. Power application test. The power application test shall be performed in two parts. For both portions of the test, the reference point temperature shall be held constant at the specified value. The value of the temperature-sensitive parameter V_{MC} shall be measured with a measuring current (I_M) which will produce negligible internal heating. The diode under test shall then be operated with heating power (PHI intermittently applied at a greater than or equal to 98 percent duty factor. The temperature-sensitive parameter V_{MH} shall be measured during the interval between heating pulses ($\leq 300\ \mu s$) with constant measuring current (I_M) applied. If, as can be the case with axial devices, it is not possible to maintain the lead temperature constant during the power application test, the difference in the lead temperature at which V_{MH} and V_{MC} are measured shall be recorded. This lead temperature difference (T_{LH} - T_{LC}) divided by the average heating power (D_{PH}) shall be subtracted from the calculated thermal resistance to correct for this error. It is not possible, due to the presence of electrical transients in the voltage waveform, to measure the TSP at the instant that the heating current is removed. For a particular device type the shortest time after removal of heating current that the TSP shall be measured is found by performing the test at various power levels and noting the shortest time where the measured value of thermal resistance is essentially independent of power dissipated. Power levels of 25 percent above and below the power corresponding to the specified heating current are recommended for determining this delay time. The junction-to-lead thermal resistance shall therefore be calculated from the value of the temperature-sensitive parameter V_{MH} as measured at the previously determined delay time (usually between 10 and 50 µs). If, as can be the case with axial lead devices, it is not possible to maintain the lead temperature constant during the power application test, the difference in the lead temperature at which V_{MH} and V_{MC} are measured shall be recorded. This lead temperature difference (T_{LH} - T_{LC}) divided by the average heating power (D_{PH}) shall be subtracted from the calculated thermal resistance to correct for this error. The heating power (P_H) shall be chosen such that the calculated junction-to-reference point temperature difference as measured at V_{MH} is greater than or equal to +50°C.

b. Measurement of the temperature coefficient of the temperature-sensitive parameter (calibration). The temperature coefficient of the temperature-sensitive parameter shall be measured utilizing the chosen measuring current (I_M) used during the Power Application Test. The DUT shall be externally heated in an oven or on a temperature controlled heat sink. The measuring current shall be chosen such that the temperature-sensitive parameter varies linearly with temperature over the range of interest and that negligible internal heating ($P_C \approx 0$) occurs during the calibration procedure, i.e., $T_R \approx T_J$. The reference point temperature range used during calibration shall encompass the temperature range encountered in the Power Application Test. The value of the temperature-sensititive parameter temperature coefficient ($\Delta V_{MC}/\Delta T_{MC}$) shall be calculated from the calibration curve (V_{MC} versus T_{MC}). It can generally be assumed that, for devices of a given design and construction, the temperature coefficient of the temperature-sensitive parameter is constant. The temperature coefficient shall be measured on 10 devices to validate this assumption. If the relative sample standard deviation of these measurements is less than or equal to ±3 percent, the average of the measured temperature coefficients can be used in the calculation of thermal resistance for all other devices of the design and construction.

3.1 Calculation of thermal resistance. For axial lead diodes the reference point for calculations of the junction-to-lead thermal resistance ($R_{\theta JL}$) shall be at a point on the lead .375 inch (9.52 mm) from the-body of the diode under test. For thermally unsymmetrical devices, the specified lead temperature shall be the average of the two lead temperatures measured with both leads terminated thermally in the same manner. The following equation is used to calculate the junction-to-lead thermal resistance:

$$R_{\theta JR} = \frac{T_J - T_R}{DP_H} = \frac{V_{MH} - V_{MC}}{DP_H} \left[\frac{\Delta V_{MC}}{\Delta T_{MC}}\right]^{-1}_{\text{Calibration}} - \left[\frac{T_{LH} - T_{LC}}{DP_H}\right]_{\text{Optional}}$$

where V_{MC} is the value of the temperature-sensitive parameter for T_{MC} equal to T_{LC} and T_{LH} - TLC corrects for variations in the lead temperature during the Power Application Test. Measurements of T_R and T_{MC} are made by means of a thermocouple attached to the referenced point. The power dissipation in the DUT is calculated from the equation $P_H = I_V V_F$. If the power dissipation during measuring and calibration is not negligible, then P_c should be subtracted from P_H when calculating the thermal resistance. The specimen junction-temperature shall be considered stabilized when halving the time between the initial application of power and the taking of the reading causes no error in the indicated results within the required accuracy of measurement.

3.2 Test circuit. See figure 4081-1.

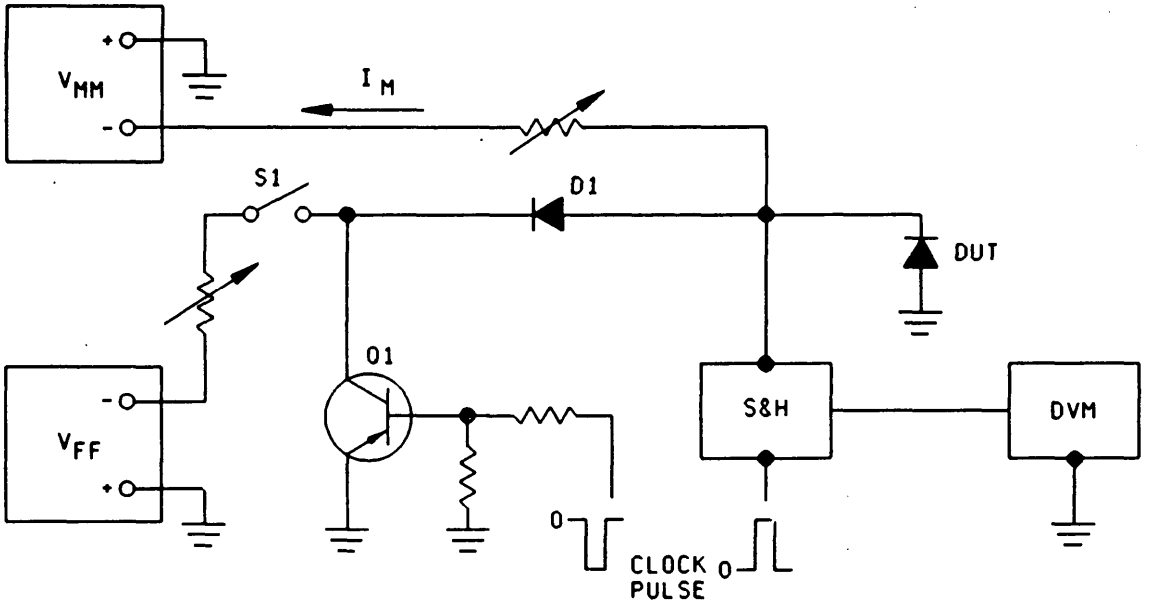

FIGURE 4081-1. Test circuit.

The circuit is controlled by a clock pulse with a pulse width less than or equal to 300 µs and repetition rate less than or equal to 66.7 Hz. When the voltage level of the clock pulse is zero, the transistor Q1 is off and the forward current through the OUT is the sum of the constant heating current and the constant measuring current. Biasing transistor Q1 on, shunts the heating current to ground and effectively reverse biases the diode D1. The sample-and-hold unit (S and H) (or cathode ray oscilloscope) is triggered when the heating current is removed and is used to monitor the forward voltage of the diode under test. During calibration, switch S1 is open.

4. Summary. The following conditions shall be specified in the detail specification:

a. Reference point temperature for heating power measurements.

b. Accept or reject criteria.

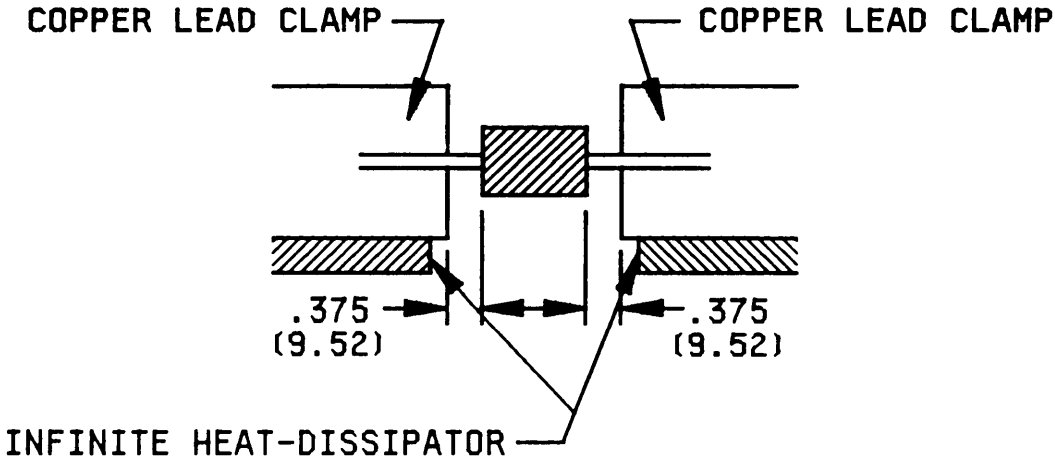

FIGURE 4081-2. Mounting arrangement.

4100 Series

Electrical characteristics tests for microwave diodes

1. Measurement of conversion loss, output-noise ratio, and other microwave parameters shall be conducted with the device fitted in the holder. All fixed adjustments of the holder shall be make at a laboratory designated by the Government. In the test equipment, the impedance presented to the mixer by the local oscillator (and the signal generator, if used) shall be the characteristic impedance of the transmission line between the local oscillator and mixer (the maximum VSWR, lokking toward the local oscillator, shall be 1.05 at the signal and image frequentcies).

2. For qualification inspection of reversible UHF and microwave devices, the radio-frequency measurements, excluding the post-environmental-test end points and high-temperature-life (nonoperating) end points, shall be made, first, with the adapter on one end of the device, and then repeated with the adapter at the opposite end of the device; for the environmental and life tests, fifty percent of each sample shall be tested with the adapter on one end of the device and the remaining half of the sample shall be tested with the adapter on the opposite end of the device. End-point measurements shall be made without moving the adapter. This procedure shall be repeated on at least one lot every 6 months.

3. For quality conformance inspection of reversible UHF and microwave devices, the electrical measurements, including the post-environmental-test end points, may be made with the adapter on either end of the device.

METHOD 4101.3

CONVERSION LOSS

1. Purpose. The purpose of this test is to determine the ratio of the available RF input power to the available IF output power under specified conditions.

2. Test circuits. The following test circuits shall apply:

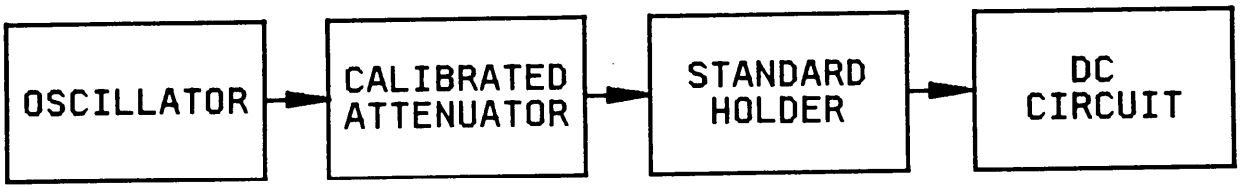

FIGURE 4101-1. Test setup for incremental measurement.

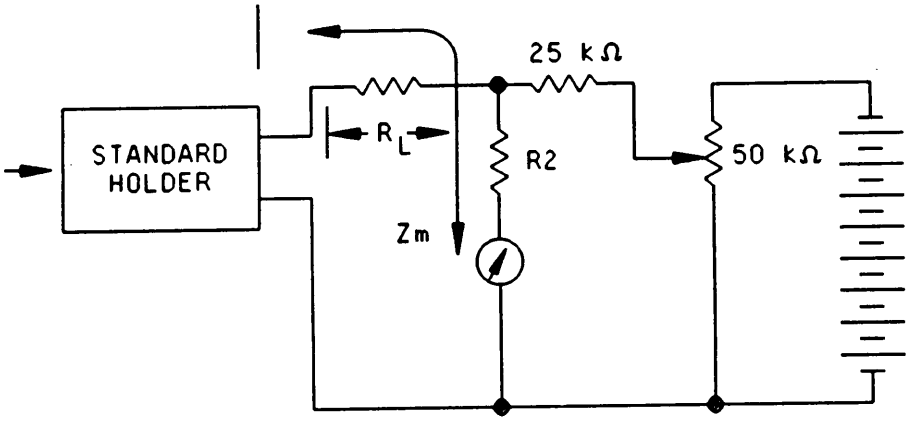

FIGURE 4101-2. Output circuit for the incremental measurement.

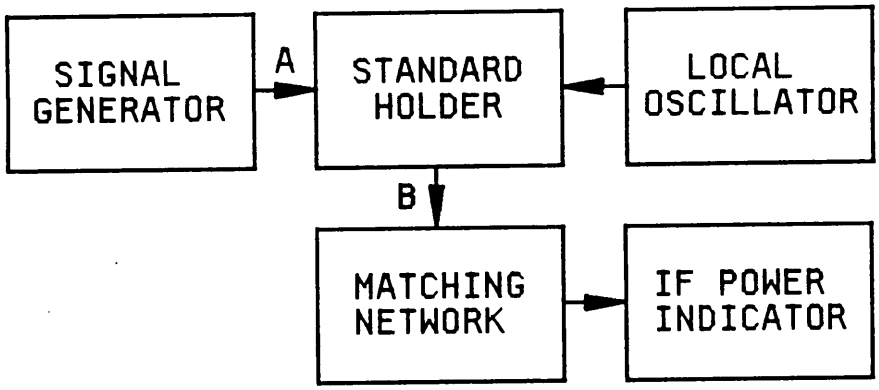

FIGURE 4101-3. Test setup for heterodyne measurement.

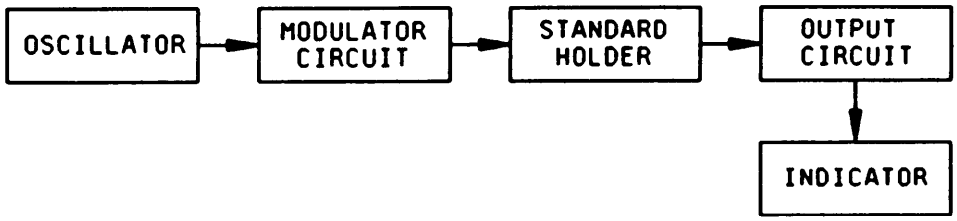

FIGURE 4101-4. Test setup for modulation measurement.

2.1 Overall noise figure method. See method 4121 for output noise ratio and method 4126 for overall noise figure.

3. Procedure.

3.1 Test condition A (Incremental). The equipment for this test is shown in figures 4101-1 and 4101-2. An expression for conversion loss is shown in the equation:

$$L = \frac{G_b}{2\,P_o\left(\frac{\Delta I}{\Delta P}\right)^2}\left[\frac{4G_b\,\frac{\Delta I}{\Delta V}}{\left(\frac{G_b + \Delta I}{\Delta V}\right)^2}\right]$$

L = Conversion loss.
ΔI = Incremental change in current.
ΔP = Incremental change in power.

P_o = Average power ($P + 0.5\Delta P$).

$G_b = \frac{1}{Z_m}$

$\frac{}{\Delta V}$ = Ir nductance of diode under test.

IF conductance = $\frac{1}{Z_{if}}$

The diode is loaded by the resistance $R_L + r_2$ that is adjusted to the specified load impedance (Z_m). $Z_m R_L$ is the dc load resistance; load resistance shall be specified. The current supplied by the battery balances out the diode current at some standard power level P, and makes the current in the microammeter zero. With a change in power ΔP, ΔI can be measured directly. With the injection of a small voltage (few millivolts) ΔV at P_o power level, ΔI can be directly measured. (This impedance can be measured by other means. See IF impedance, method 4116, Z_{if}.) These values can be inserted in the equation and the conversion loss can be calculated for the conditions of test.

3.2 Test condition B (heterodyne). A signal generator feeds signal power to the mixer that converts the power to the IF by beating with the local oscillator. The converted power is measured with an IF power meter. Both the available signal power from the generator at A, shown on figure 4101-3 and the increase in the available IF power at B shall be measured when the noise is applied, their ratio being the conversion loss.

3.3 Test condition C (modulation. The equipment for this test is shown in figure 4101-4. Conversion loss is given by the equation:

$$L = \frac{4n}{(1+n)^2} \cdot \left[\frac{m^2 p}{G_b \times E_B^2}\right]$$

m = modulation coefficient.

P = available power.

E_B = rms modulation voltage across load.

n = ratio of load conductance to IF conductan

$G_b = \frac{1}{Zm}$

To avoid measuring G_b for each unit, the factor $\frac{4n}{(1+n)^2}$ is assumed to be unity.

The error caused by this approximation is less than 0.5 dB and is in such a direction to make a unit with an extreme conductance seem worse.

$$L = \frac{m^2 p}{G_b E_B^2}$$

Since the modulation coefficient is difficult to measure, this equipment is calibrated with standard diodes measured. by any absolute method.

$$L(dB) = 10 \log \frac{(m^2 p)}{(G_b)} = 20 \log E_B$$

A high impedance voltmeter can be used to measure 20 log E_B directly. The voltmeter is set on the 0.01 volt full scale, and the modulation voltage set so that the term 10 log(m^2p/G_b) is equal to 20.0 on the dB scale. To obtain this setting, the modulation is adjusted, so the voltmeter reading on the decibel scale is 20.0 minus the value of conversion loss for the standard diodes. This corresponds to a value of m of 1.58 percent for P = 1.0 mW and G_b = .0025 Ω. The conversion loss for unknown diodes is then 20.0 minus the reading of the output meter in decibels.

3.4 Test condition D (overall-noise-figure). The overall-noi se-figure method derives the conversion loss by known properties of the apparatus and is expressed by the equation:

$$\bar{F}_o = L(N + \bar{F}_i - 1)$$

Where:

L = conversion loss of the mixer.

N = output noise ratio of the diode.

$\bar{F}_i$ = noise figure of the IF amplifier.

L is measured as described in method 4101 and N is measured as described in method 4121.

All terms are ratios.

4. Detail drawings. The following drawings, as applicable, are used in the performance of this test: JAN 103, 107, 124, 174, 233, 234, and 266; DESC D64100, C64169, D65019, C65042, D65084, C651O1, C65017 and C66053 .

5. Summary. The following conditions shall be specified in the detail specification:

a. Test condition (see 3.).

b. Load impedance (Z_m) (see 3.1).

c. Local oscillator power (see 3.2).

d. Load resistance (R_L) (see 3.1).

e. Local oscillator frequency (see 3.2).

METHOD 4102

MICROWAVE DIODE CAPACITANCE

1. Purpose. The purpose of this test is to measure the low frequency capacitance of a semiconductor diode. The capacitance is the small signal capacitance of the diode as measured in a defined test holder under specified bias conditions.

2. Test circuit. A bridge or meter should be used for the measurement. The specified signal level at the diode terminals, as measured with a suitable voltmeter, should be low enough so that a doubling of the level produces no measurable change in either the capacitance or shunt conductance of the diode. The test holder should be constructed so that the fringing capacitance is not altered by inserting the diode.

3. Procedure. The measurement shall be made at a specified frequency and bias voltage. A low frequency capacitance bridge or meter is used to measure the capacitance of the diode at a specified bias point. The effective case capacitance is measured in the same test holder as the diode. Junction capacitance may be determined by subtracting the effective case capacitance from the total measured capacitance.

4. Summary. The following conditions shall be specified in the detail specification:

a. Frequency (see 3.).

b. Bias voltage (see 3.).

c. Signal level at diode terminals (see 2.).

d. Bias point (see 3.).

METHOD 4106

DETECTOR POWER EFFICIENCY

1. Purpose. The purpose of this test is to measure the detector power efficiency.

2. Test circuit. See figure 4106-1.

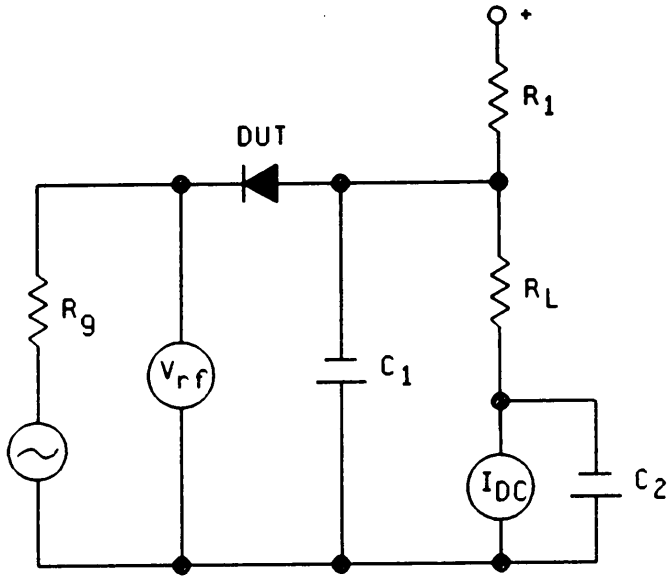

FIGURE 4106-1. Test circuit for detector power efficiency.

3. Procedure. Resistor R_1 and capacitor C_1 comprise the load circuit and shall be as specified. Resistor R_1, in conjunction with R_L, provides the specified bias current for the DUT. Capacitor C_2 provides RF bypass for the output current meter I_{DC}. The frequency and amplitude of the ac signal and the output impedance of the generator shall be as specified. The change in output current I_{DC} is measured when the ac signal is applied.

Then: Detector power efficiency $= \dfrac{4(\Delta I_{DC})^2 R_L R_G}{V^2_{rms}} \times 100$ percent.

4. Summary. The following conditions shall be specified in the detail specification:

a. Values for circuit components R_L and C_1 (see 3.).

b. Bias current (see 2.).

c. Frequency and amplitude of ac signal (see 3.).

d. Impedance of signal generator (see 3.).

METHOD 4111.1

FIGURE OF MERIT (CURRENT SENSITIVITY)

1. Purpose. The purpose of this test is to measure the figure of merit of a semiconductor detector diode. The figure of merit is as follows:

$$M = \frac{\beta R_V}{\sqrt{R_V + R_a}}$$

2. Test circuit. The following test circuit shall apply:

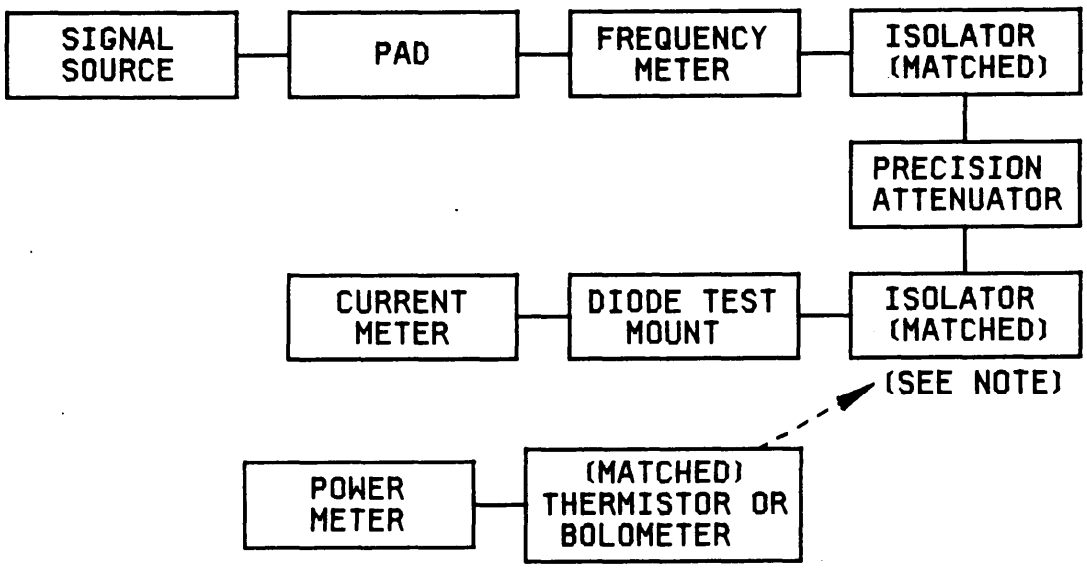

NOTE : For power calibration.

FIGURE 4111-1. Test setup for figure of merit measurement.

3. Procedure. The equipment for this test is shown in figure 4111-1. A continuous wave (cw) radio frequency (rf) signal is applied to the detector whose output short circuit current is measured and the short circuit current sensitivity (ß) is computed. The figure of merit (M) is then determined from:

$$M = \frac{\beta R_V}{\sqrt{R_V + R_a}}$$

Approximate method:

$$M = \beta\, 2\sqrt{R_X}\ \frac{1 + 1/2\zeta}{\sqrt{1 + \zeta}}$$

Where:

$$\beta = i/P$$

and

i = short circuit diode current

P = power incident at the diode holder

Where:

$$R_X = \frac{1}{\sqrt{(R_1 + R_a)(R_2 + R_a)}}$$

and

R_1 = lower limit of video resistance

R_2 = upper limit of video resistance

R_a = equivalent amplifier noise generating resistance.

and where:

$\frac{1 + 1/2\zeta}{\sqrt{1 + \zeta}}$ is the correction factor

is the correction factor

and:

$$\zeta = \frac{R_V + R_a}{R_X} - 1$$

When the extreme values of the video resistance for a given diode type are known, it is possible to relate figure of merit to rectified current if other conditions are satisfied.

For all normal ranges of video resistance, the correction factor is very close to unity and an approximation:

$$M = 2\beta\sqrt{R_X}$$

therefore, the figure of merit (M) may be determined by measuring the rectified current under proper conditions.

4. Summary. The following conditions shall be specified in the detail specification:

a. Test oscillator frequency (see 2.).

b. Maximum permissible test oscillator power (see 2.).

c. DC bias if supplied by an external source.

d. Ra, if other than 1,200 Ω.

METHOD 4116.1

IF IMPEDANCE

1. Purpose. The purpose of this test is to measure the real part of the impedance at the IF output terminals of the mixer diode under test.

2. Test circuit. The following test circuits shall apply:

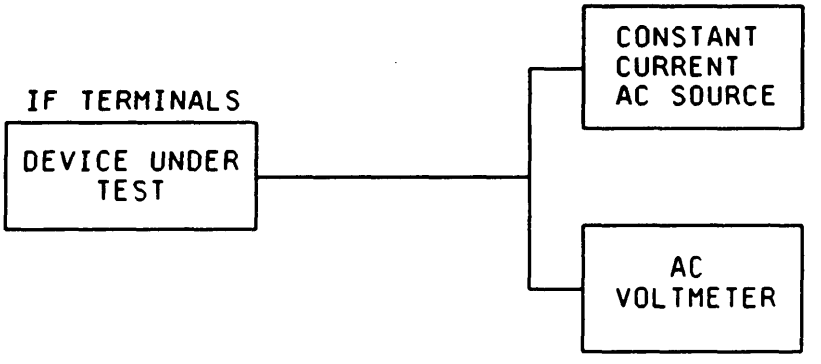

FIGURE 4116-1. AC method.

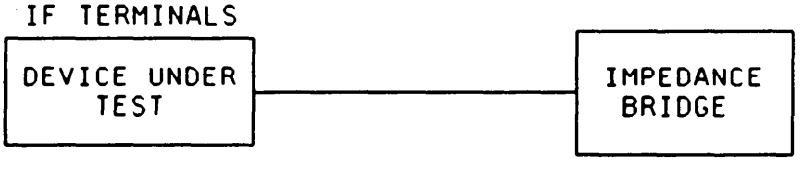

FIGURE 4116-2. Impedance bridge method.

3. Procedure. Since the IF resistance is the slope of the mixer diode's I-V characteristic under the specified test conditions, the requirement of any measuring technique is to measure the slope without affecting the operating characteristics of the DUT. At all times, the device holder RF input port should see a broadband match (minimum of two times IF frequency). The IF test frequency, local oscillator frequency, and power shall be specified.

3.1 Test condition A (at). With equipment arranged as shown in figure 4116-1, a constant current ac generator is coupled to the diode under test. The dc and ac diode loads are arranged as specified and the ac current is set at a level low enough so that halving the level produces a change in the measured IF impedance of the diode of less than 5 percent. The IF impedance is calculated as follows:

$$Z_{if} = \frac{V}{I}$$

Where:

Z_{if} = diode IF impedance.
V = measured ac voltage.
I = ac current.

3.2 Test condition B (impedance bridge). The equipment is arranged as shown in figure 4116-2. The impedance bridge signal level is adjusted to a low level using the same criterion in 3.1. The diode IF impedance is determined from the impedance bridge.

4. Detail drawings. The following drawings, as applicable, are used in the performance of this test: JAN 107, 124, 174, 233, 234, and 266; DESC D64100, C64169, D65019, C65042, D65084, C65101, C65017 and C66053.

5. Summary. The following conditions shall be specified in the detail specification.

a. Test condition (see 3.).

b. Local oscillator frequency (see 3.).

c. Local oscillator power or diode rectified current (see 3.).

d. DC load resistance (see 3.1 and 3.2).

e. AC load impedance (see 3.1 and 3.2).

f. IF test frequency (see 3.).

g. DC bias, if applicable.

METHOD 4121.2

OUTPUT NOISE RATIO

1. Purpose. The purpose of this test is to measure the output noise ratio of a mixer diode. Since the output noise ratio is a measure of the excess noise generated by a mixer diode in its normal operating condition, the measurement should be in the appropriate standard holder.

2. Test circuit. The following test circuits shall apply:

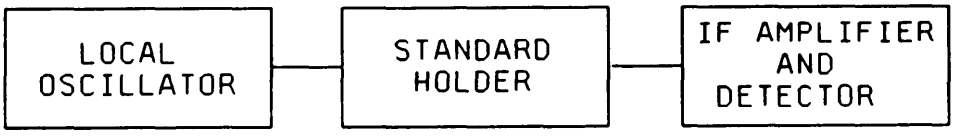

FIGURE 4121-1. Direct measurement method.

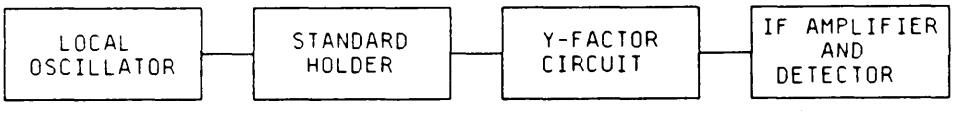

FIGURE 4121-2. Y-factor method.

3. Procedure.

3.1 Test condition A (direct measurement). In this method the output noise ratio is determined by establishing a reference output reading on the output meter shown in figure 4121-1, with the diode operating under specified test conditions, then a resistor equal to the specified IF impedance of the diode is substituted for the diode. The resistor becomes noisy when the current passes" from a noise diode (temperature limited diode). Value for noise resistor shall be specified. The current is adjusted to provide the reference output reading and the noise ratio is computed from the relationship:

$$N = \frac{e\ IR}{2kT_o} + 1 = 20\ IR + 1$$

Where:

To = +293°K ±5°K and I is the current of the noise diode in amperes.

R = the resistance of the noise resistor.

k = Boltzmann's constant (1.38×10^{-23} joules per °K).

e = the electronic charge (1.6×10^{-19} coulombs).

3.2 Test condition B (computational). In this method the output noise ratio is determined from the equation:

$$N = \frac{\bar{F}_o}{L} - F_i + 1$$

Where:

$\bar{F}_o$ = overall receiver noise figure.

L = diode conversion loss.

$\bar{F}_i$ = noise figure of the IF amplifier.

All terms are ratios.

$\bar{F}_o$ and $\bar{F}_i$ are determined as described in method 4126; L is determined as described in method 4101.

3.3 Test condition C (Y-factor). In this method the output noise ratio is determined by establishing a reference output reading on the output meter shown in figure 4121-2, with the diode operating under specified test conditions, then a resistor equal to the specified IF impedance of the diode is substituted for the diode by a switch in the Y-factor circuit. The output noise ratio is then determined from:

$$N = \bar{F}_i (Y - 1) + 1$$

where:

$Y = N_{oc}/N_{or}$

N_{oc} is the reference output reading on the output meter with the diode connected to the circuit.

N_{or} is the output reading with the resistor connected to the circuit.

F_i is determined as described in method 4126.

All terms are ratios.

4. Detail drawings. The following drawings, as applicable, are used in the performance of this test: JAN 103, 107, 124, 174, 233, 234, and 266; DESC 064100, C64169, D65019, C65042, D65084, C65101, C65017 and C66053.

5. Summary. The following conditions shall be specified in the detail specification:

a. Test condition (see 3.).

b. Local oscillator frequency (see 2,).

c. Local oscillator power (see 2.).

d. IF frequency (see 2.)

e. Value for noise resistor (see 3.1).

f. DC bias, if applicable.

METHOD 4126.2

OVERALL NOISE FIGURE AND NOISE FIGURE OF THE IF AMPLIFIER

1. Purpose. The purpose of this test is to measure the overall noise figure of a mixer diode and the noise figure of the associated IF amplifier. Since the noise figure of a network is defined as follows:

$$\overline{F_o} = \frac{\text{(available input signal power)/(available input noise power)}}{\text{(available output signal power)/(available output noise power)}},$$

it is necessary to measure the noise power that is actually delivered to the output termination. This measurement is divided by a similar measure of the output noise that would have been obtained if the network were noiseless and only transmitted the thermal noise of the input termination. In making noise figure measurements, the standard practice is to provide matched impedance at the signal and image frequencies and make suitable corrections (by calculations or appropriate filtering) to obtain an equivalent single-side-band noise figure. The noise figure obtained without a signal band-pass filter to eliminate the image-frequency band is commonly referred to as the double-side-band noise figure and is approximately 3 dB smaller than the single-side-band noise figure, depending on the exact transmission characteristics of the particular mixer. If a single-side-band noise figure is being measured directly, it is necessary to terminate the image resistively in a matched load (isolator) to avoid errors due to second-order effects. These second-order effects may arise from reflection of the image back into the mixer to give a larger- or smaller-than-true value of noise figure, depending on the phase of the reflected image.

2. Apparatus. The apparatus shall be arranged as follows:

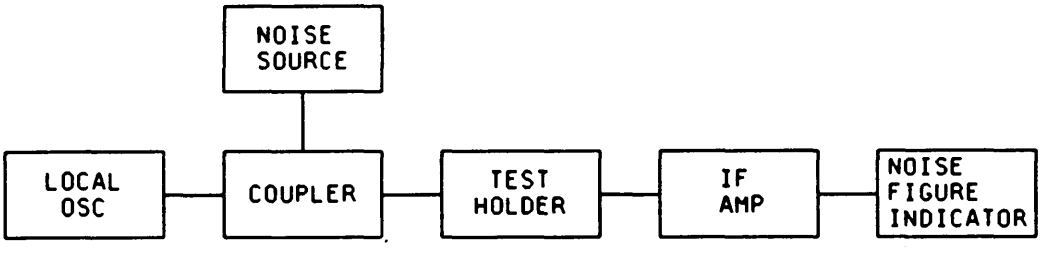

FIGURE 4126-1. Test setup for overall noise figure.

3. Procedure. When using test methods A and C the local oscillator frequency and power, IF, and excess noise ratio of noise source shall be specified.

3.1 Test condition, A (dispersed-signal-source). A signal source with available power dispersed uniformly over the pass band of the network, and calibrated in terms of available power per unit bandwidth is used to determine that portion of the output noise power that results from the input termination noise. Suitable dispersed-signal generators are thermionic-noise diodes, gas-discharge tubes, resistors of known temperature or an oscillator whose frequency is swept through the band at a uniform rate. Single-side-band noise figure is obtained by adding 3 dB to the measured (double-side-band) noise figure. At all times the device holder rf input should see a broadband match (minimum of two times IF frequency).

3.2 Test condition B (computation). Assuming the IF amplifier noise figure "s known, the overall noise figure can be computed as follows:

$$\bar{F}_o = L\,(N + \bar{F}_i - 1)$$

Where:

L = diode conversion loss.

N = output noise ratio of the diode.

$\bar{F}_i$ = noise figure of the IF amplifier.

L is measured as described in method 4101 and N is measured as described in method 4121.

All terms are ratios.

3.3 Test condition C (IF amplifier noise figure). Resistors in the particular diode type cases are required, constructed so that when they are inserted in the standard holder (mixer), the output susceptance of the holder is approximately the same as when the diodes are inserted. A sufficient number of resistors should be used so that the output conductance of the standard holder may be finely varied over the specified maximum range for the diode type. A common junction (defining the mixer IF port) joins the holder to the IF amplifier and the noise (temperature-limited diode). The entire circuit, including the noise diode power supply and the current meters, must be well shielded or filtered to avoid IF feedback. With the resistor in the holder, the IF amplifier gain is adjusted to give an output meter reference reading near full-scale. Precise IF attenuation is then inserted, and the noise diode turned on and adjusted in emission to restore the output meter reference reading. The average (de) noise anode current is then noted and used to compute the IF average noise figure from:

$$F_i = 1 + \frac{eIR}{2kT_o\,(A-1)} - \frac{T_a}{T_o}$$

$$F_i = 1 + \frac{20IR}{A-1} - \frac{T_a}{T_o}$$

Where:

F_i = noise figure of the IF amplifier (power ratio).

e = electronic charge (1.6×10^{-19} coulombs).

k = Boltzmann's constant (1.38×10^{-23} joules per °K).

T_o = standard noise temperature (+293°K).

T_a = temperature of resistor (°K).

A = inserted IF attenuation (power ratio).

I = average (de) noise diode current (amperes).

R = reciprocal of IF conductance (ohms).

4. Summary. The following conditions shall be specified in the detail specification:

a. Test condition (see 3.).

b. Local oscillator frequency (see 3.).

c. Local oscillator power (see 3.).

d. IF (see 3.).

e. DC bias, if bias is supplied by an external source.

f. Excess noise ratio of noise source (see 3.).

METHOD 4131.1

VIDEO RESISTANCE

1. Purpose. The purpose of this test is to measure the video resistance of the device. Video resistance shall be defined as the reciprocal of the slope of the current versus voltage characteristic curve at the operating point.

2. Test circuits. The test circuits shall be as follows:

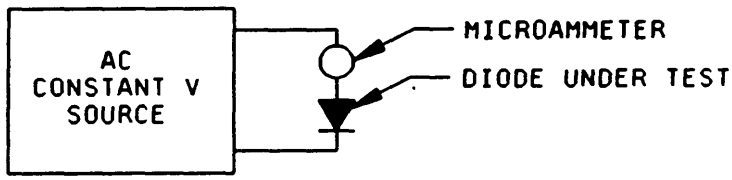

FIGURE 4131-1. Constant voltage method.

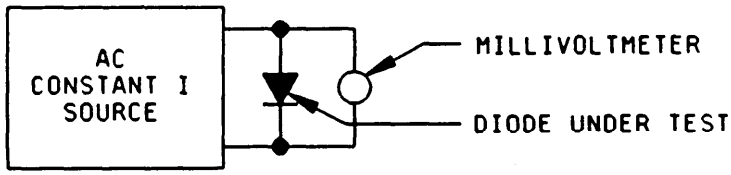

FIGURE 4131-2. Constant current method.

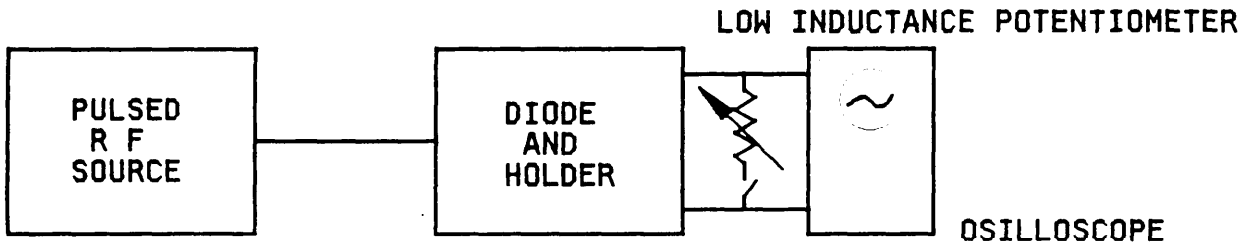

FIGURE 4131-3. Pulsed RF method.

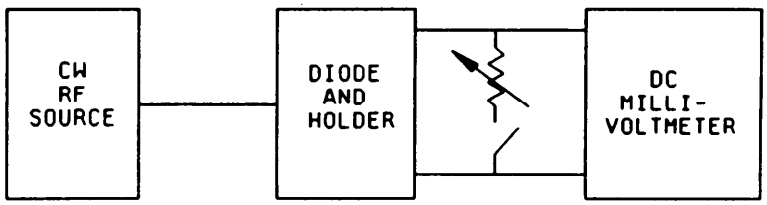

FIGURE 4131-4. Continuous wave RF method.

3. Procedure. The measurement shall be made with the diode operating under the specified test conditions. The applied signal used and the instrument impedance shall be such that doubling or halving their value does not change the video impedance by more than ±5 percent.

3.1 Test condition A (constant voltage). Test equipment used is shown in figure 4131-1. A small specified ac signal is applied to the diode from a constant voltage source. Current is measured with a low resistance microammeter. R_v equals e/i.

3.2 Test condition B (constant current). Test equipment used is shown in figure 4131-2. A small specified ac current is passed through the diode from a constant current source. The voltage is measured across the device with a high impedance millivoltmeter. R_v equals e/i.

3.3 Test condition C (pulsed rf). Test equipment used is shown in figure 4131-3. A pulsed rf signal, as specified, is fed to the diode whose output is fed into the vertical amplifier of an oscilloscope. A resistor is placed in parallel with the device and varied to lower the rectified pulse to half its value. R_v equals the resistance required to halve the pulse. Bandwidth of vertical amplifier should be a minimum of two times the reciprocal of the pulse width

3.4 Test condition D (continuous wave (cw) radio frequency (rf)). Test equipment used is shown on figure 4131-4. A specified cw rf signal is applied to the detector whose output open circuit rectified voltage is measured on a high impedance dc millivoltmeter. A resistor is placed in parallel with the device and varied to lower this voltage to half its initial value. R_v equals the resistance required to halve the voltage.

4. Summary. The following conditions shall be included in the detail specification:

a. Test condition (see 3.).

b. Maximum signal voltage (see 3.1).

c. Maximum current (see 3.2).

d. Maximum power (see 3.3 and 3.4).

e. DC bias, if applicable.

METHOD 4136.1

STANDING WAVE RATIO (SWR)

1. Purpose. The purpose of this test is to measure the SWR of the device at the local oscillator terminals. SWR shall be defined as the ratio of the maximum voltage (or current) to the minimum voltage (or current) along the transmission line between the device and the local oscillator terminals. The measurement shall be made with the diode operating under normal operating conditions.

2. Test circuits. The test circuits shall be as follows:

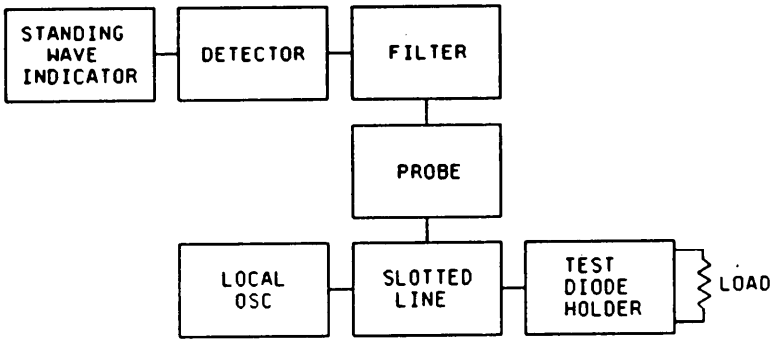

FIGURE 4136-1. Slotted line method.

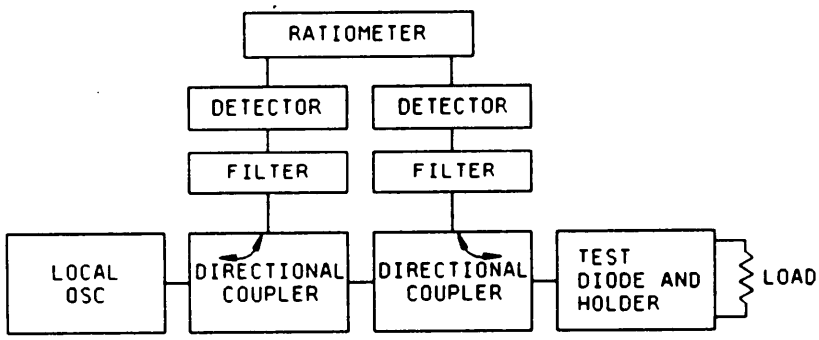

FIGURE 4136-2. Reflectometer method.

3. Procedure.

3.1 Test condition A (slotted line). A slotted line is inserted between the device in its holder and the local oscillator, and the probe is moved to determine the maximum and minimum voltage or current points. To limit probe errors and keep the power in the slotted line section at a level high enough to operate the standing wave indicator and low enough to maintain small signal conditions, the normal signal generator and indicator connections to the slotted as shown in figure 4136-1 should be interchanged. That is, the signal generator should be connected to the moving probe and the detector indicator should be connected to the slotted line section opposite the test diode holder.

a. The power source may be used without modulation if a sensitive galvanometers is substituted for the standing wave indicator (tuned voltmeter).

b. The dc load resistance is set to that specified.

c. Insert diode into test holder.

d. Adjust frequency and power level to those specified.

e. Move the probe in the slotted line until the standing wave indicator shows at voltage maximum (or current). Adjust the range switch and gain until an SWR of 1 is indicated.

f. Move the probe until a minimum is indicated.

g. Read the SWR directly at the minimum point.

3.2 Test condition B (reflectometer). A calibrated reflectometer is inserted between the device in its holder and the local oscillator; then the SWR is read, see figure 4136-2

a. Adjust frequency and power level to those specified.

b. The dc load resistance is set to that specified.

c. Insert diode into the test holder.

d. The reflection coefficient and the SWR can be read directly.

NOTE: When this technique is used, the filter detector combination shall have an SWR <1.2.

4. Summary. The following conditions shall be included in the detail specification:

a. Test condition (see 3.).

b. DC load resistance (see 3.1 and 3.2).

c. Test frequency (see 3.1 and 3.2).

d. Power level (see 3.1 and 3.2).

e. Maximum voltage (or current), if applicable.

METHOD 4141.1

BURNOUT BY REPETITIVE PULSING

1. Purpose. The purpose of this test is to determine the capabilities of the device to withstand repetitive pulses.

2. Test circuit. See figure 4141-1.

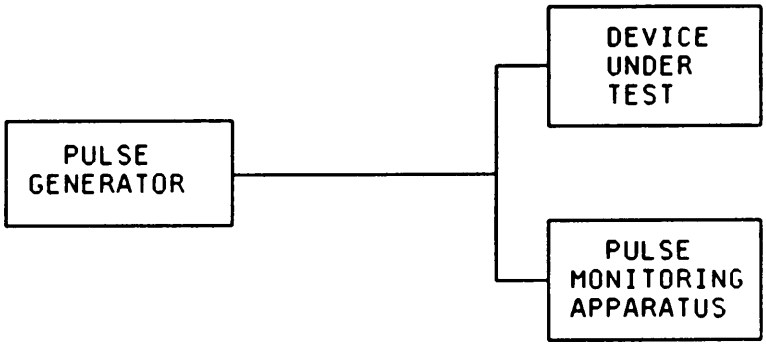

FIGURE 4141-1. Test setup for repetitive pulsing.

3. Procedure. This method shall be acceptable to determine the device capability to withstand repetitive pulses. The general method of measuring device capability to withstand burn-out by repetitive pulsing is to apply the specified number of pulses to the DUT and then measure the specified electrical parameters. The pulse polarity shall be such as to cause the current to flow in the forward direction. When the maximum change in the specified electrical parameter is exceeded, the device shall have failed to meet this burnout test. The pulse generator source impedance shall be specified. While the device to be tested is not in the circuit, adjust the pulse generator output for the specified open-circuit pulse voltage, pulse width, and pulse repetition rate. Then insert the device in the circuit. The device shall be left in the circuit for a minimum specified time.

4. Summary. The following conditions shall be specified in the detail specification:

a. Pulse generator source impedance (see 3.).

b. Pulse width (see 3.).

c. Pulse voltage (see 3.).

d. Pulse repetition rate (see 3.).

e. Minimum time that the device is under test (see 3.).

f. Polarity of applied pulse (see 3.).

g. Minimum pulse energy per pulse absorbed by diode, if applicable.

METHOD 4146.1

BURNOUT BY SINGLE PULSE

1. Purpose. The purpose of this test is to determine the capability of the device to withstand a single pulse.

2. Test circuit. The test circuit shall be as follows:

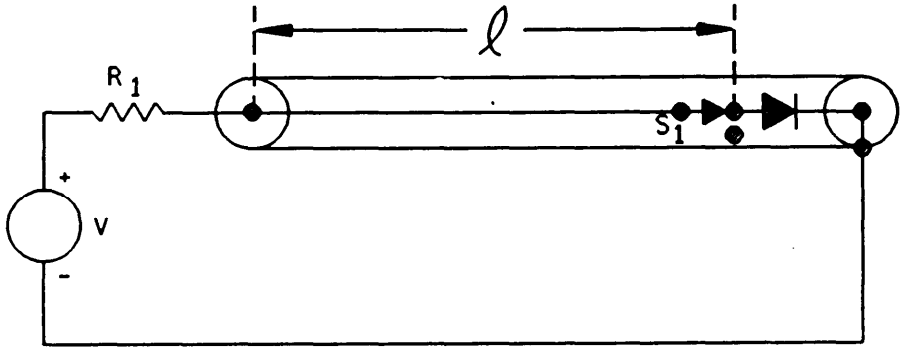

FIGURE 4146-1. Burnout by single pulse.

3. Procedure. The device shall be subjected to a pulse from the coaxial line shown in figure 4146-1. The line shall be charged with the specified voltage, and the contact shall be made by dropping the center conductor vertically from a height of 2 ±.05 inches (50.8 ±1.27 mm) above the contact position. The electrical and mechanical connection shall be such as to have a minimum effect on the free fall of the conductor. The polarity of the inner conductor with respect to the outer conductor shall be such as to cause the device" current to flow in the forward direction or as specified.

4. Detail drawing. DESC drawings B66054 and C66058 as applicable, are used to perform this test.

5. Summary. The following conditions shall be specified in the detail specification:

a. Test voltage (see 3.).

b. Polarity, if required.

METHOD 4151

RECTIFIED MICROWAVE DIODE CURRENT

1. Purpose. The purpose of this test is to measure the rectified microwave diode current under conditions for conversion loss.

2. Apparatus. The apparatus used for this test should be capable of demonstrating device conformance to the minimum requirements of the individual specification.

3. Procedure. The rectified microwave diode current shall be measured under the conditions for conversion loss. The test shall be conducted in the mixer shown on the specified drawing under the conditions specified for the conversion loss test.

4. Summary. The following conditions shall be specified in the detail specification:

a. Test apparatus (see 2.).

b. Conversion loss test conditions (see 3.).

4200 Series

Electrical characteristics tests for thyristors (controlled rectifiers)

METHOD 4201.2

HOLDING CURRENT

1. Purpose. The purpose of this test is to measure the holding current of the device under the specified conditions.

2. Test circuit. See figure 4201-1.

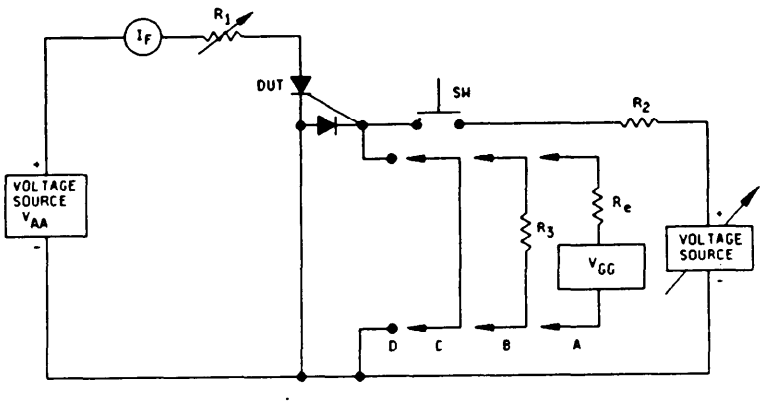

FIGURE 4201-1. Test circuit for holding current.

3. Procedure. The anode supply voltage is set at its specified value with resistance R_1 adjusted so that the initial forward current, I_{F1}, which flows when the device is triggered equals the value specified. Switch SW is then momentarily closed to trigger the device and reopened. The initial current is quickly reduced to the specified test current I_{F2}. Then the specified gate bias condition is applied. The resistance R_1 is then gradually increased, until the device turns off. The value of forward current immediately prior to turn-off is the holding current.

4. Summary. The following conditions shall be specified in the detail specification:

a. Anode supply voltage, V_{AA}.

b. Initial forward current, I_{F1}.

c. Forward test current, I_{F2}.

d. Bias condition, gate to cathode, as applicable:

A: Bias (specify V_{GG}, gate-to-cathode polarity, equivalent bias circuit resistance, R_e).

B: Resistance return (specify value of R_3).

C: Short circuit.

D: Open circuit.

e. Gate trigger source voltage, open circuit magnitude and pulse width.

f. Total gate trigger circuit resistance, R_2.

METHOD 4206.1

FORWARD BLOCKING CURRENT

1. Purpose. The purpose of this test is to measure the forward blocking current under the specified conditions, using the dc method or the ac method, as applicable.

2. DC method.

2.1 Test circuit. R_1 shall be chosen to limit the current flow in the event the device switches to the "on" state.

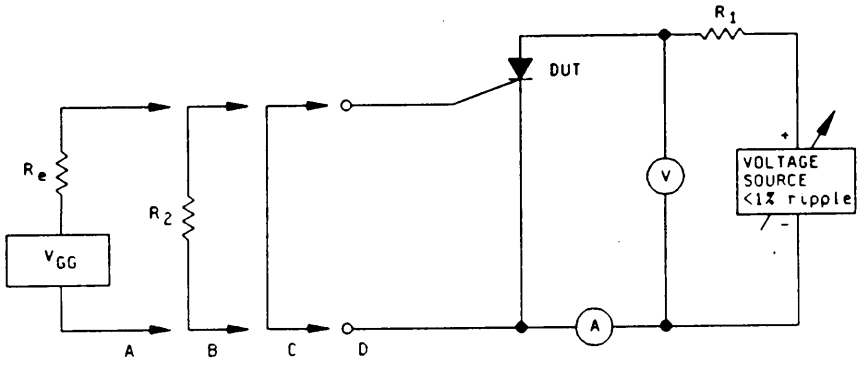

NOTE: The ammeter shall present essentially a short circuit to the terminals between which the current is being measured or the voltmeter readings shall be corrected for the drop across the ammeter.

FIGURE 4206-1. Test circuit for forward blocking current (dc method).

2.2 Procedure. The supply voltage is adjusted to obtain the specified value of forward voltage across the device with the specified gate bias condition applied (see figure 4206-1). The forward blocking current is then read from the current meter.

2.3 Summary. The following conditions shall be specified in the detail specification:

a. DC method.

b. Test voltage.

c. Bias condition, gate-to-cathode, as applicable:

A: Bias (specify V_{GG}, gate-to-cathode polarity, equivalent bias circuit resistance, R_e).

B: Resistance return (specify value of R_2).

C: Short circuit.

D: Open circuit.

3. AC method.

3.1 Test circuit. R_1 shall be chosen to limit the current flow in the event the device switches to the "on" state. D_1 and D_2 are diodes capable of blocking the peak value of the ac voltage supply. Peak reading techniques shall be used to measure the necessary parameters.

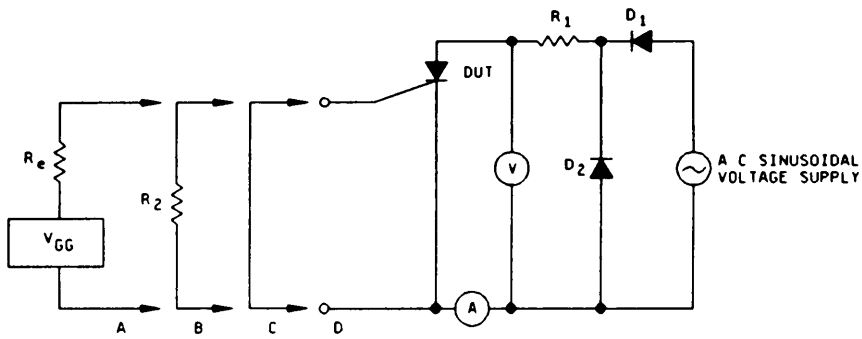

NOTE: The ammeter shall present essentially a short circuit to the terminals between which the current is being measured or the voltmeter readings shall be corrected for the drop across the ammeter.

FIGURE 4206-2. Test circuit for forward blocking current, (ac method).

3.2 Procedure. The peak supply voltage is adjusted to obtain the specified peak forward voltage across the device with the specified gate bias condition applied (see figure 4206-2). The peak forward blocking current is then read from the current indicator. Voltage should be gradually applied to prevent turn-on-of the device due to excessive dv/dt.

3.3 Summary. The following conditions shall be specified in the detail specification:

a. AC method.

b. Peak forward test voltage.

c. Frequency.

d. Bias condition, gate-to-cathode, as applicable:

A: Bias (specify V_{GG}, gate-to-cathode polarity, equivalent bias circuit resistance, R_e).

B: Resistance return (specify value of R_2).

C: Short circuit.

D: Open circuit.

METHOD 4211.1

REVERSE BLOCKING CURRENT

1. Purpose. The purpose of this test is to measure the reverse blocking current under the specified conditions, using the dc method or the ac method, as applicable.

2. DC method.

2.1 Test circuit. R_1 shall be chosen to limit the current flow in the event of the device goes into reverse breakdown.

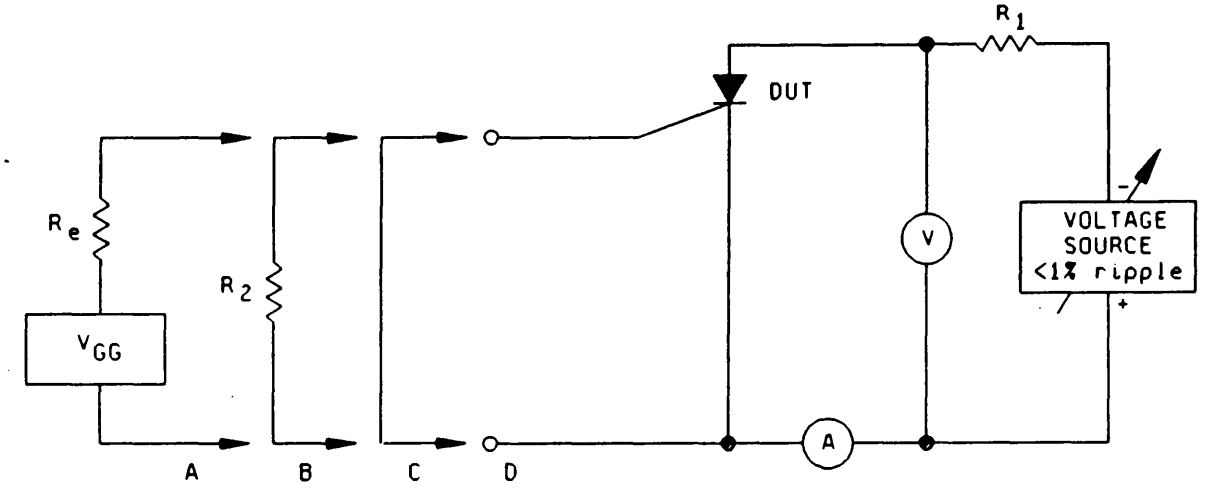

NOTE: The ammeter shall present essentially a short circuit to the terminals between which the current is being measured or the readings shall be corrected for the drop across the ammeter.

FIGURE 4211-1. Test circuit for reverse blocking current (dc method).

2.2 Procedure. The supply voltage is adjusted to obtain the specified value of reverse voltage across the device with the specified gate bias condition applied (see figure 4211-1). The reverse blocking current is then read from the current meter.

2.3 Summary. The following conditions shall be specified in the detail specification:

a. DC method.

b. Test voltage.

c. Bias condition, gate-to-cathode, as applicable:

A: Bias (specify V_{GG}, gate-to-cathode polarity, equivalent bias circuit resistance, R_e).

B: Resistance return (specify value of R_2).

C: Short circuit.

D: Open circuit.

3. AC method.

3.1 Test circuit. R_1 shall be chosen to limit the current flow in the event the device goes into reverse breakdown. D_1 and D_2 are diodes capable of blocking the peak value of the ac voltage supply. Peak reading techniques shall be used to measure the necessary parameters.

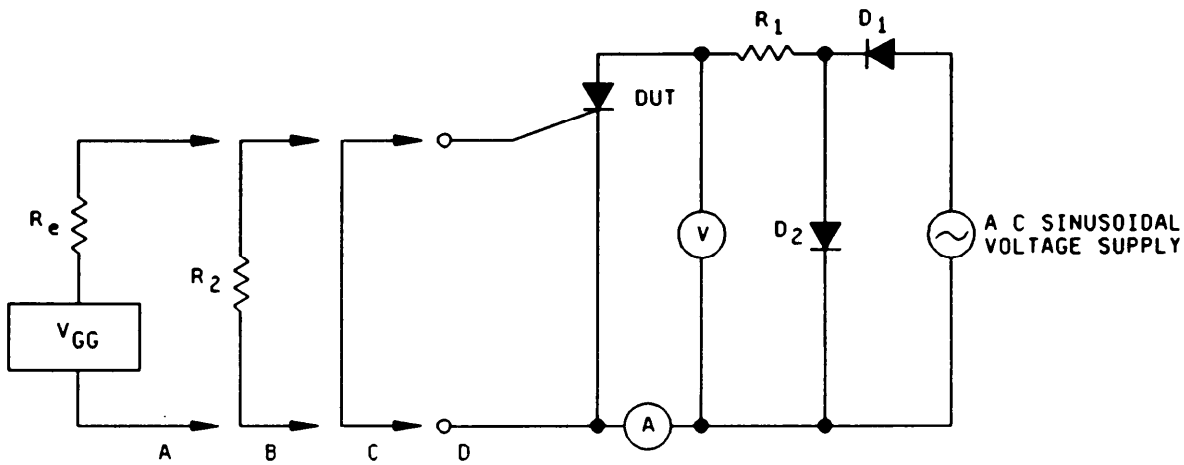

NOTE: The ammeter shall present essentially a short circuit to the terminals between which the current is being measured or the voltmeter readings shall be corrected for the drop across the ammeter.

FIGURE 4211-2. Test circuit for reverse blocking current (ac method).

3.2 Procedure. The peak supply voltage is adjusted to obtain the specified peak reverse voltage across the device with the specified gate bias condition applied (see figure 4211-2). The peak reverse blocking current is then read from the current indicator.

3.3 Summary. The following conditions shall be specified in the detail specification:

a. AC method.

b. Peak reverse test voltage.

c. Frequency.

d. Bias condition, gate-to-cathode, as applicable:

A: Bias (specify V_{GG}, gate-to-cathode polarity, equivalent bias circuit resistance, R_e).

B: Resistance return (specify value of R_2).

C: Short circuit.

D: Open circuit.

METHOD 4216

PULSE RESPONSE

1. Purpose. The purpose of this test is to measure the pulse response of the device under the specified conditions.

2. Test circuit. See figure 4216-1.

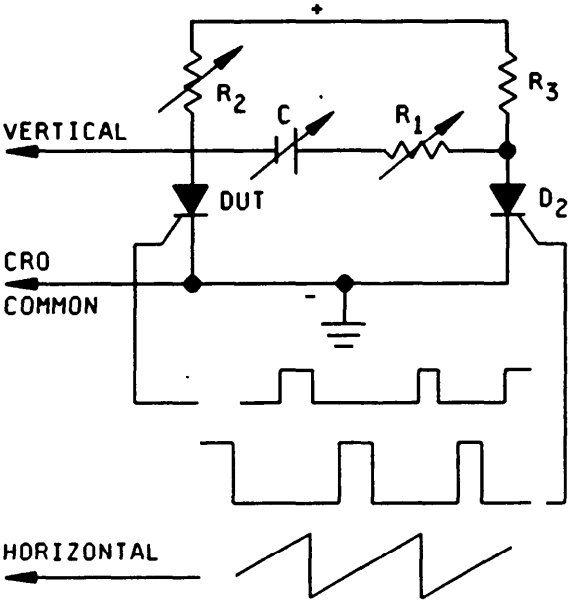

FIGURE 4216-1. Test circuit for pulse response.

3. Procedure. The pulse response of the device shall be measured in the circuit of figure 4216-1. R_2 is adjusted to permit the specified value of forward current to flow in the device being measured when it is the on state. C, P and the secured controlled rectifier, D_2 are used to switch off the device being measured. C shall be large enough to ensure that the device will turn off. R_1 limits one recurrent peak reverse current to below the rated value. The pulse repetition rate should be low enough to ensure that the anode-cathode voltage of the device being measured reaches the value of forward working voltage specified for the measurement.

4. Summary. The following conditions shall be specified in the detail specification:

a. Anode voltage (see 3.).

b. Resistor R_2 (see 3.).

c. Test current.

d. Repetition rate.

METHOD 4219

REVERSE GATE CURRENT

1. Purpose. The purpose of this test is to measure the dc reverse gate current of the device at a specified reverse gate voltage.

2. Test circuit. R is chosen to limit the current in the event the reverse gate breakdown voltage is exceeded.

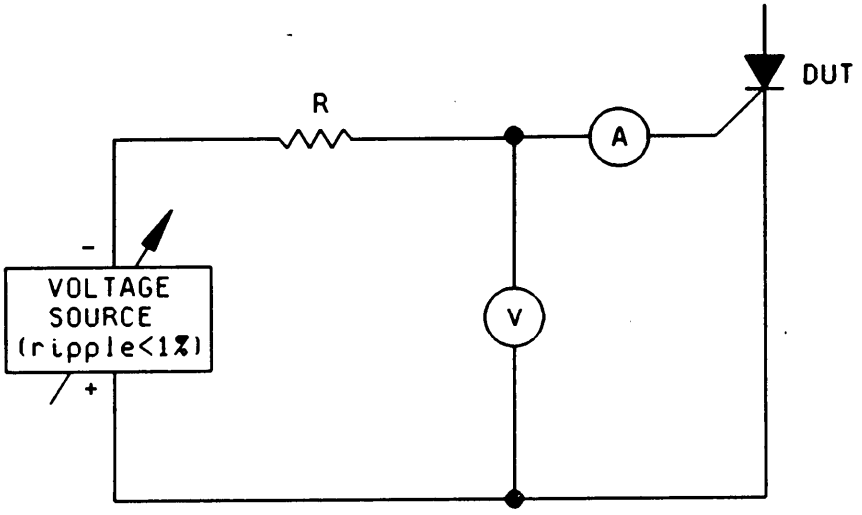

NOTE: The ammeter shall present essentially a short circuit to the terminals between which the current is being measured or the voltmeter readings shall be corrected for the drop across the ammeter.

FIGURE 4219-1. Test circuit for reverse gate current.

3. Procedure. Set the specified reverse gate voltage and read the reverse gate current.

4. Summary. The dc reverse gate voltage shall be specified in the detail specification:

METHOD 4221.1

GATE-TRIGGER VOLTAGE
OR
GATE-TRIGGER CURRENT

1. Purpose. The purpose of this test is to measure the dc gate-trigger voltage or dc gate-trigger current.

2. Test circuit. Care should be taken to minimize noise or spurious signals in the trigger circuit.

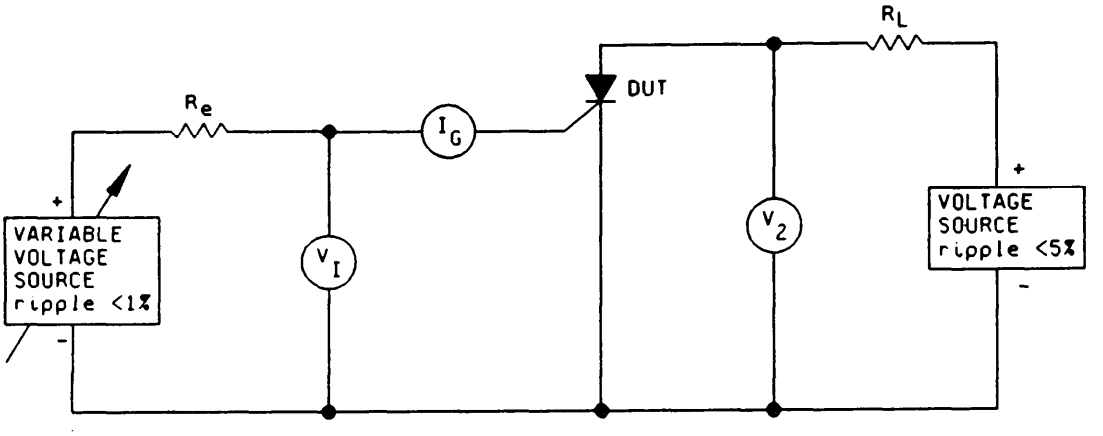

NOTE: The ammeter shall present essentially a short circuit to the terminals between which the current is being measured or the voltmeter readings shall be corrected for the drop across the ammeter.

FIGURE 4221-1, Test circuit for gate-trigger voltage or gate-trigger current.

3. Procedure. The anode voltage, V_2, is set to the specified value. The gate voltage, V_1, is slowly increased from zero. The gate-trigger-current or gate-trigger voltage is read as the highest value achieved prior to a sharp decrease in anode voltage.

4. Summary. The following conditions shall be specified in the detail specification:

a. Anode voltage, V_2 (see 3.).

b. Load resistance, R_L.

c. Equivalent gate circuit resistance, R_e (the resistance looking into the gate circuit from the DUT gate-to-cathode terminals).

METHOD 4223

GATE-CONTROLLED TURN-ON TIME

1. Purpose. The purpose of this test is to measure the time between initiation (10 percentage point) of gate pulse and the time at which the output pulse is at 90 percent of its final value.

2. Test circuit. The anode circuit loop L/R shall be >0.01 and <0.1 of the forward current rise time, t_r. The open-circuit, gate-voltage rise time shall be <0.1 of the delay time, t_d of the DUT. V_{AA} must have stabilized at its peak value prior to triggering the gate pulse generator.

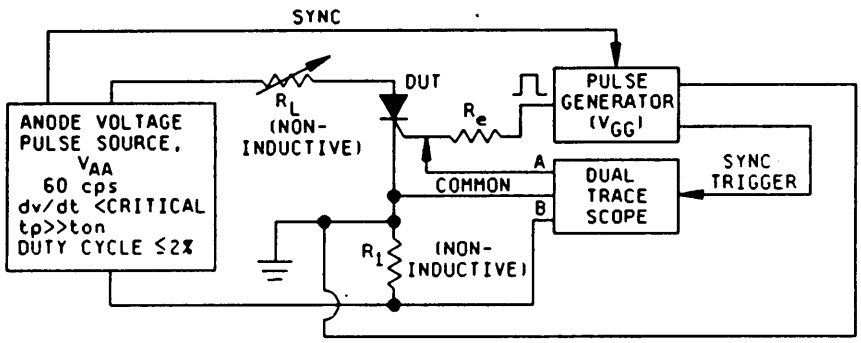

FIGURE 4223-1. Test circuit for gate-controlled turn-on time.

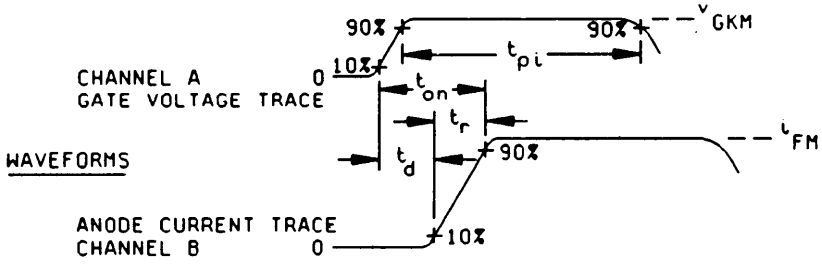

FIGURE 4223-2. Waveforms, gate-controlled turn-on time.

3. Procedure. Set the anode voltage pulse source and the gate conditions as specified. Adjust R_L to achieve the specified i_{FM}. The turn-on time is then read from the dual trace scope as shown on figure 4223-2.

4. Summary. The following conditions shall be specified in the detail specification:

a. Peak anode supply voltage, V_{AA}.

b. Peak forward current, i_{FM}.

c. Peak open-circuit, gate supply voltage, V_{GG}.

d. Gate pulse width, t_{p1}.

e. Equivalent gate source resistance, R_e.

f. Minimum and maximum allowable di/dt of the forward current pulse.

METHOD 4224

CIRCUIT-COMMUTATED TURN-OFF TIME

1. Purpose. The purpose of this test is to measure the turn-off time of the device under the specified conditions.

2. Test circuit.

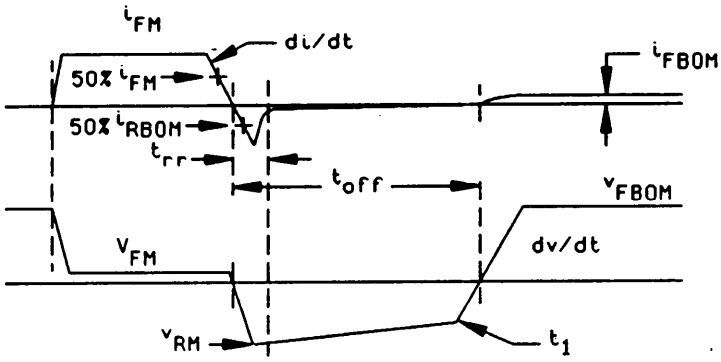

FIGURE 4224-1. Circuit-commutated turn-off time waveforms.

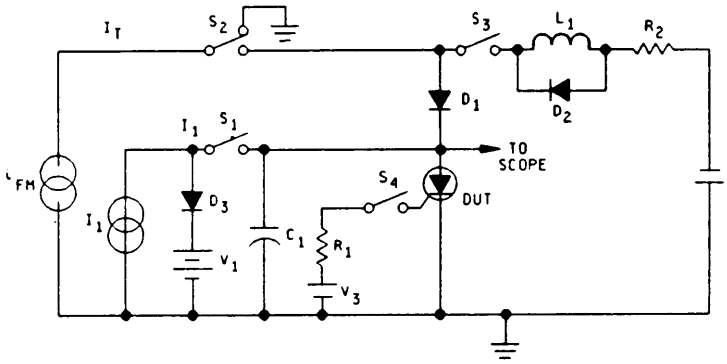

FIGURE 4224-2. Test circuit for circuit-commutated turn-off time.

NOTE: The simplified circuit diagram on figure 4224-2 illustrates the operating principles of a circuit used to generate the waveforms illustrated on figure 4224-1. For purposes of clarity, the circuit diagram utilizes current generators, ideal. switches, and no provision for repetitive test cycles.

3. Test description. The test is performed by first causing the thyristor under test to conduct the specified on-state current at the specified thermal condition. This current is conducted for the specified time (a period long enough to establish carrier equilibrium). Next, the current is reversed through the thyristor at the specified rate (di/dt) by means of an externally applied reverse blocking voltage. The reverse current recovers stored charge from the anode and cathode junctions of the thyristor, allowing the thyristor to support the specified reverse blocking voltage. A further waiting time is required for the collector junction charges to recombine before the thyristor is capable of blocking forward voltage. Since this recombination cannot be observed directly, the test is performed by applying an off-state voltage at the specified rate of rise (dv/dt) after successively shorter waiting times until it is observed that the thyristor is unable to support the off-state voltage (without switching to the on-state). The thyristor current and voltage waveforms are illustrated on figure 4224-1.

4. Procedure.

a. S_2 and S_4 are closed simultaneously causing the thyristor under test to switch to the on-state and conduct the specified current i_{FM}; S_4 is then opened to disconnect the gate trigger supply R_1 and V_3.

b. After the specified on-state current duration, S_3 is closed to cause current reversal. The rate of current change (di/dt) is determined-by L_1 and R_2. Diode D_2 prevents a commutation voltage transient when the thyristor under test begins to recover its reverse blocking capability. Diode D_1 must have a longer reverse recovery time than the thyristor under test so that the reverse voltage appears across the thyristor under test.

c. The application of off-state voltage is initiated by closing S_1. The current I_1 completes the reverse recovery of D_1 and is then diverted to C_1. C_1 charges linearly with time at a rate equal to I_1/C_1 producing the required dv/dt illustrated on figure 4224-1. This voltage rises to a value equal to VI which is adjusted to the specified off-state voltage.

5. Summary. The following conditions shall be specified in the detail specification:

a. On-state current amplitude.

b. On-state current duration, ton.

c. Commutation rate (di/dt) (the slope of the line from 50 percent of + peak to 50 percent of - peak).

d. Peak reverse voltage (maximum).

e. Reverse voltage at t_1 (minimum).

f. Operating temperature.

g. Test repetition rate.

h. Rate of rise of reapplied off-state voltage (dv/dt).

i. Off-state voltage.

j. Gate bias conditions (between gate trigger pulses):

(1) Gate source voltage.

(2) Gate source resistance.

METHOD 4225

GATE-CONTROLLED TURN-OFF TIME

1. Purpose. The purpose of this test is to measure the gate-controlled turn-off time of the device under the specified conditions.

2. Test circuit. The circuit used for the test is shown on figure 4225-1. The thyristor is turned on by the gate pulse delivered by the "on pulse" generator. On-state current is determined by the off-state supply voltage and the load resistor R_L.

After a predetermined time a specified gate turn-off current is supplied to the gate terminal by the "off pulse" generator.

The storage time and fall time may be observed by means of an oscilloscope connected across the current sensing resistor.

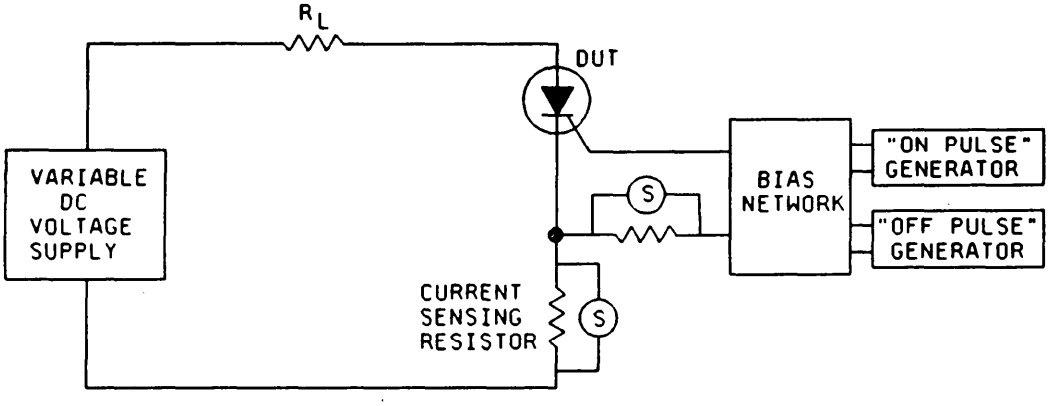

FIGURE 4225-1. Gate turn-off test circuit.

Storage time is the time interval between the 10 percent point on the leading edge of the gate current off-pulse and the 90 percent point on the trailing edge on-state current waveform. Fall time is the time interval between the 90 percent and 10 percent points-on the trailing edge of the on-state current waveform. Turn-off time is the sum of storage time and fall time. Typical waveforms are shown on figure 4225-2.

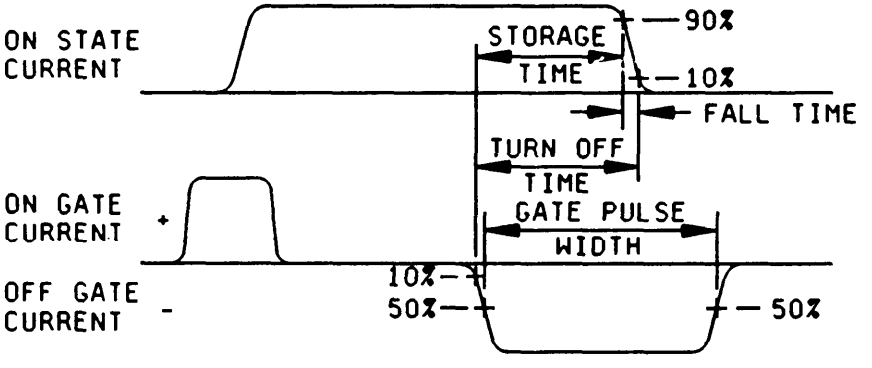

FIGURE 4225-2. Typical gate turn-off circuit waveforms.

3. Test description. A turn-off thyristor can be switched from the on-state to the off-state with a control signal of appropriate polarity to the gate terminal. The delay and fall times of anode current during the turn off of the thyristor are affected by gate trigger pulse variations and anode circuit conditions. This test method establishes a test circuit and provision for measuring of critical test conditions.

4. Procedure.

a. Gate current or gate source voltage rise time shall not exceed 10 percent of the storage time interval.

b. Duty cycle should be chosen considering heating effects of switching power losses. Sufficient anode current off time of at least 10 times the off pulse width must be allowed to ensure that the DUT remains turned off after the turn-off pulse ends.

c. The inductance of the anode circuit should be minimized to prevent anode voltage overshoot on turn-off.

5. Summary. The following conditions shall be specified in the detail spedification:

a. Off-state voltage.

b. On-state current.

c. Switching repetition rate.

d. Duty cycle (percent on-time).

e. Operating temperature (case or ambient).

f. Bias network (show circuit).

g. Gate turn-off current (peak); or gate source voltage and gate source resistance.

h. R_L.

i. Gate “on” pulse width and amplitude.

j. Gate “off” pulse width, amplitude, and delay time from gate “on” pulse.

METHOD 4226.1

FORWARD "ON" VOLTAGE

1. Purpose. The purpose of this test is to measure the voltage in the forward direction across the device under the specified conditions,

2. Test circuit. See figure 4226-1.

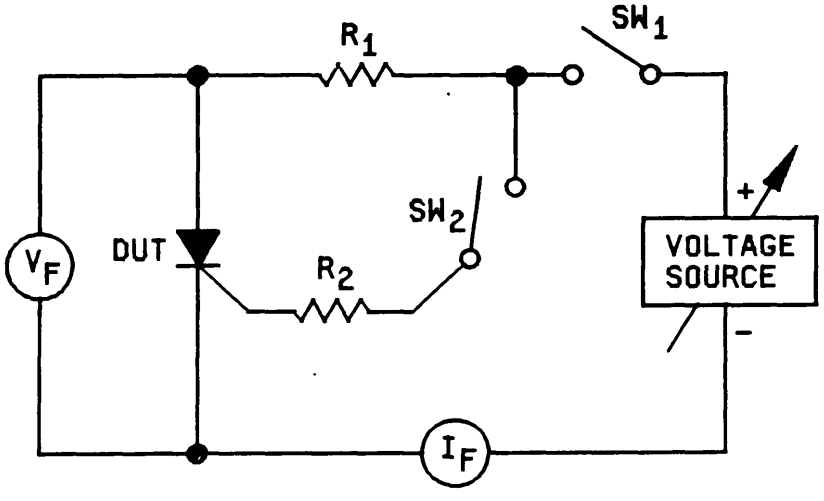

NOTE: When specified, switch SW_1 shall be used to provide pulses of short-duty cycle to minimize device heating. When pulsing techniques are used, other suitable peak-reading techniques shall be used to measure the necessary parameters, and the duty cycle and pulse width shall be specified.

FIGURE 4226-1. Test circuit for forward "on" voltage.

3. Procedure. The supply voltage is adjusted to obtain the specified value of forward current through the device with SW_1 and SW_2 closed. SW_2 shall be opened, and then the forward voltage is read when the forward current equals the specified value. When the specified test current is greater than 0.20 ampere, the voltage measuring probes shall be connected to the device inside of the current carrying connections. For axial lead devices, the voltage measuring probe(s) shall contact the lead(s) at a point .375 ±.062 inch (9.52 *1.57 mm) from the case. For all other devices, the voltage shall be measured across the normal electrical connection points.

4. Summary. The following conditions shall be specified in the detail specification:

a. Test current (see 3.).

b. Duty cycle and pulse width when pulse techniques are to be used (see above note).

METHOD 4231.2

EXPONENTIAL RATE OF VOLTAGE RISE

1. Purpose. The purpose of this test is to determine if the device is capable of blocking a forward voltage which is increasing at an exponential rate starting from zero without switching "on" in the forward direction.

2. Test circuit. R_2 is chosen to discharge C between cycles when SW is opened and R_L is a protective resistor chosen to limit the maximum device current if the device turns "on" during the voltage rise. Switch SW should have a closure time (including bounce) of not more than 0.1 T and be closed a minimum of 5 T.

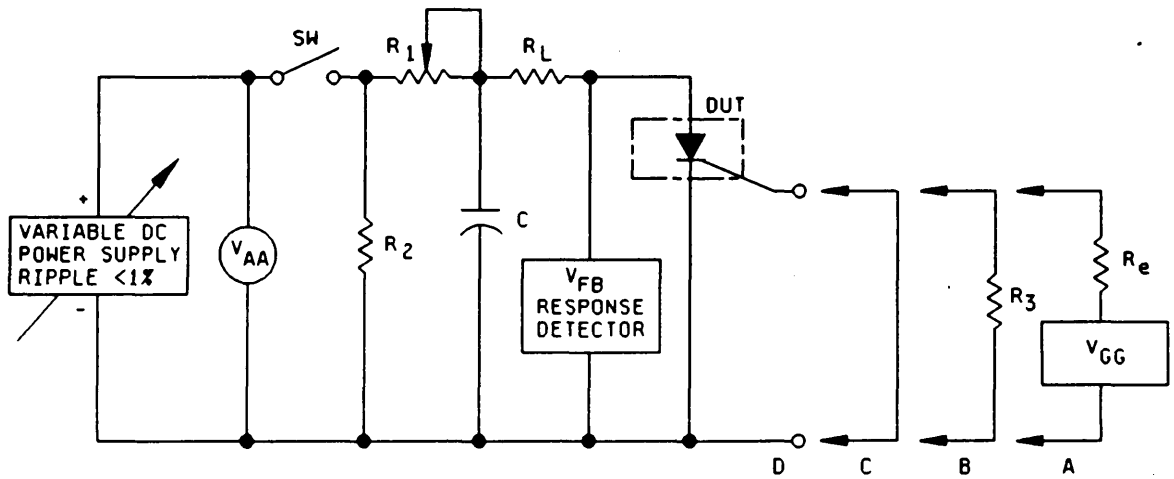

FIGURE 4231-1. Test circuit for exponential rate of voltage rise.

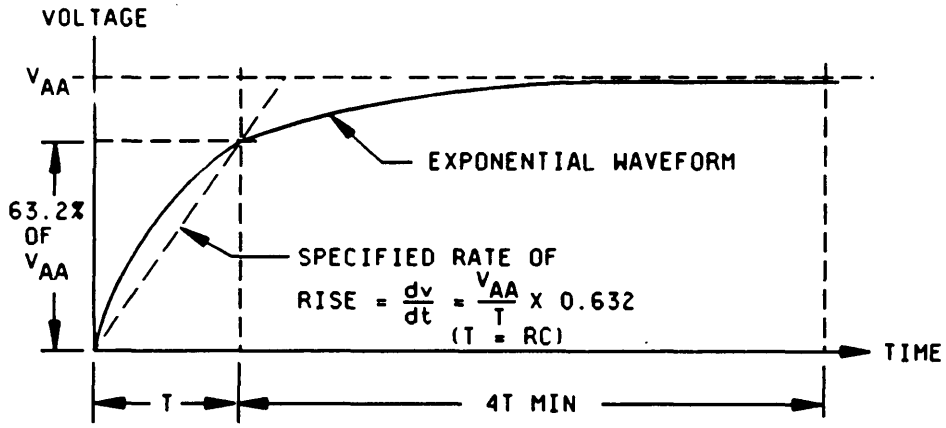

FIGURE 4231-2. Waveforms across the DUT.

3. Procedure. The voltage V_{AA} shall be adjusted to the specified value with switch SW open (see figure 4231-1). The resistor, R_L, shall be adjusted to achieve the specified rate of voltage rise, dv/dt, across the DUT with the specified gate bias condition applied. The rate of voltage rise is defined as shown on figure 4231-2. Close SW and monitor V_{FB} on the response detector. A device shall be considered a failure if V_{FB} does not rise to and maintain a value greater than the minimum specified forward-blocking voltage during the first 5 T of each voltage pulse after switch SW is closed.

4. Summary. The following conditions shall be specified in the detail specification:

a. Test voltage, V_{AA}.

b. Rate of voltage rise, dv/dt (see figure 4231-2).

c. Value of C and R_L.

d. Repetition rate.

e. Duration of test.

f. Minimum forward-blocking voltage, V_{FB}.

g. Test temperature.

h. Bias condition, gate-to-cathode, as applicable:

A: Bias (specify V_{GG}, gate-to-cathode polarity, equivalent bias circuit resistance, R_e).

B: Resistance return (specify value of R3).

C: Short circuit.

D: Open circuit.

4300 Series

Electrical characteristics tests for tunnel diodes

METHOD 4301

JUNCTION CAPACITANCE

1. Purpose. The purpose of this test is to determine the small signal junction capacitance of the tunnel diode under the specified conditions.

2. Test circuit. See figure 4301-1.

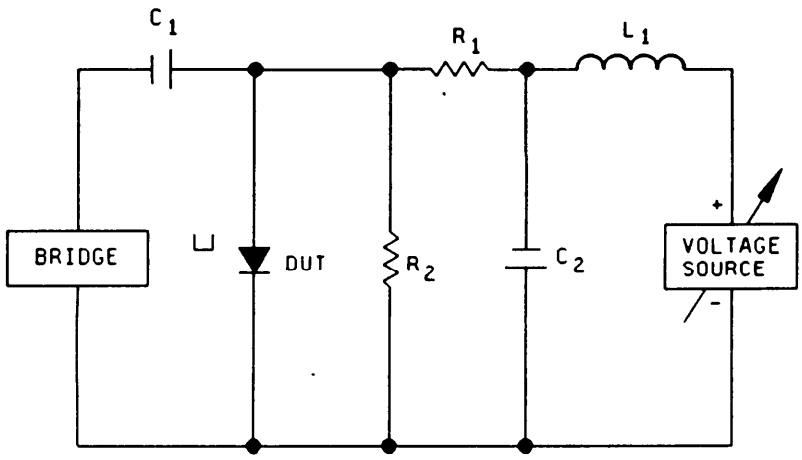

FIGURE 4301-1. Test circuit for junction capacitance.

3. Procedure. Since junction capacitance is a function of bias it is necessary to specify the forward bias at which C_1 is to be determined. The true value of junction capacitance (at a given bias) is obtained by subtracting the capacitance of the diode package from the observed capacitance. Isolation of the dc power supply from the complex impedance bridge (see figure 4301-1) is effected by the R_1, L_1, C_2 branch of the circuit.

4. Summary. The following conditions shall be specified in the detail specification:

a. Values for the circuit elements R_1, C_1, C_2, L_1, and R_2.

b. Signal frequency.

c. Bias level.

METHOD 4306.1

STATIC CHARACTERISTICS OF TUNNEL DIODES

1. Purpose. The purpose of this test is to measure the static characteristics (V_p, V_v, I_p, Iv, V_{FP}, and R_d) of the tunnel diode under the specified conditions:

2. Test circuit. See figures 4306-1 and 4306-2.

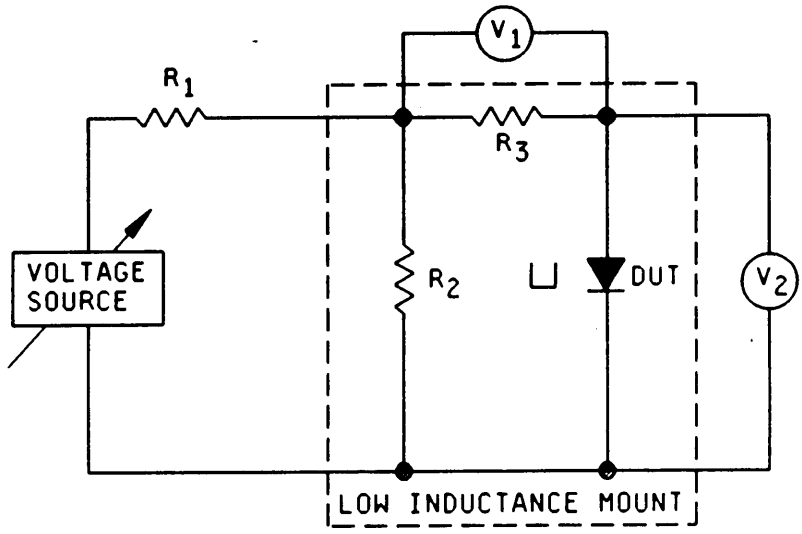

FIGURE 4306-1. Test circuit for static characteristics of tunnel diodes (dc method).

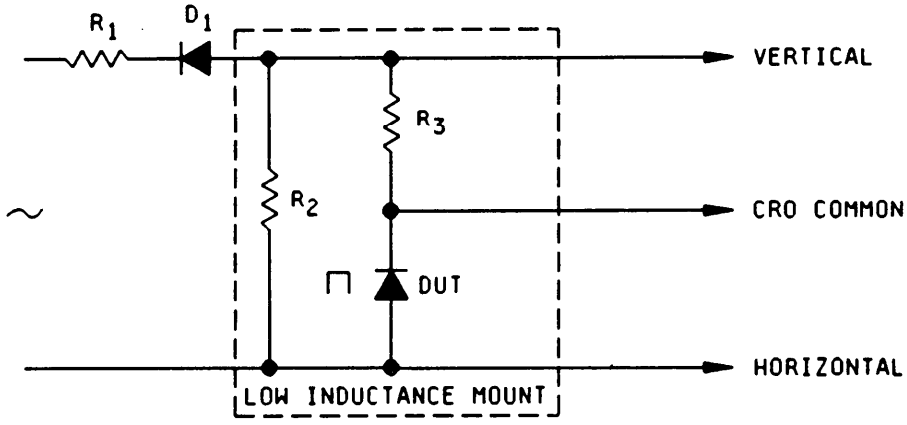

FIGURE 4306-2. Test circuit for static characteristics of tunnel diodes (ac method).

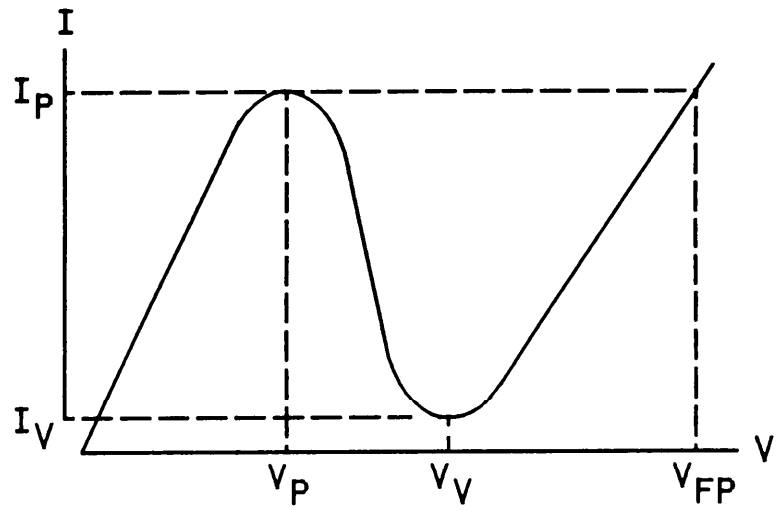

FIGURE 4306-3. Typical tunnel diode forward characteristic.

3. Procedure.

a. For the measurement of the static characteristics by point by point method the circuit of figure 4306-1 shall be used. Resistor, R_2, is small to obtain low voltage and low impedance. Resistor R_3 is a current measuring resistor. Resistor R_1 is much Larger than R_2. To obtain a plot in the negative resistance region R_1 shall be less than the magnitude of the incremental negative resistance of the tunnel diode.

b. For the measurement of the static forward characteristics of the device by oscillographic means the circuit shown on figure 4306-2 shall be used. The magnitude of R_1 shall be less than the magnitude of the incremental negative resistance of the tunnel diode. Resistance R_3 is currnet measuring resistor and should be chosen to give a suitable CRO deflection. Since the negative resistance is represented by the inverse slope of the I-V curve between the peak and valley voltage points, its approximate value can be estimated from the curve. For a more accurate method for the measurement of the negative resistance see method 4321.

4. Summary. The following conditions shall be specified in the detail specification:

a. Resistors R_1, R_2, and R_3 (see a. and b.).

b. Signal frequency (see b.).

METHOD 4316

SERIES INDUCTANCE

1. Purpose. The purpose of this test is to measure the value of the small signal series inductance under the specified conditions.

2. Test circuit. See figure 4316-1.

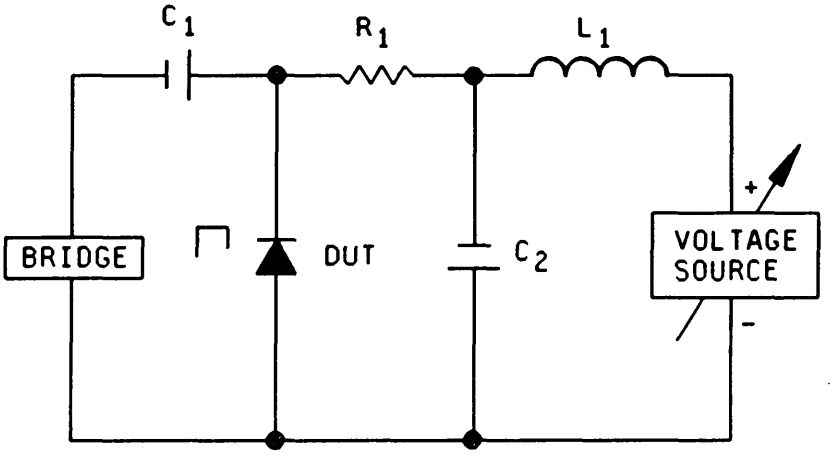

FIGURE 4316-1. Test circuit for series inductance.

3. Procedure. The device shall be reverse biased for the series inductance measurement. A sufficiently high frequency signal shall be employed to emphasize the inductive reactance, but not high enough to allow any capacitive parasitic to short circuit the device, thus precluding the determination of L_s. A recommended frequency device is one approximately 25 percent of the self resonant frequency of the DUT. Isolation of the dc power supply from the complex impedance is accomplished by the choke, L_1, in conjunction with C_1, R_1, C_2, branch (see figure 4316-1).

4. Summary. The following conditions shall be specified in the detail specification:

a. Values for circuit elements, R_1, L_1, C_1, and C_2.

b. Signal frequency

c. Reverse bias at which L_s is measured.

METHOD 4321

NEGATIVE RESISTANCE

1. Purpose. The purpose of this test is to determine the magnitude of the negative resistance under the specified conditions.

2. Test circuit. See figures 4321-1 and 4321-2.

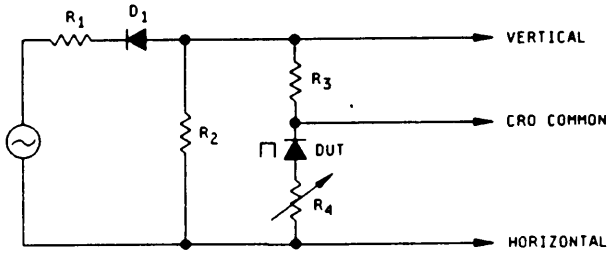

FIGURE 4321-1. Test circuit for negative resistance, short-circuit stable method.

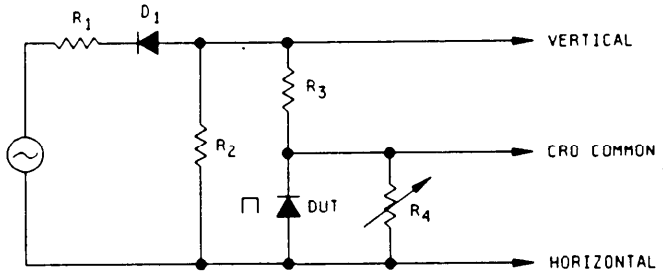

FIGURE 4321-2. Test circuit for negative resistance, open-circuit stable method.

3. Procedure. The magnitude of R_1 shall be less than the incremental negative resistance of the tunnel diode. Resistor R_3 is a current limiting resistor and should be chosen to give a suitable CRO deflection. Diode D_1 is a half wave rectifier.

3.1 Short-circuit stable method. Shunt the tunnel diode with a variable resistor R_4 (see figure 4321-1). Vary R_4 until the slope of the negative resistance appears horizontal (zero slope) on the curve trace. The shunting resistance is now equal to the magnitude of the negative resistance, R_d. ($R_4 = R_d$.)

3.1.1 Open-circuit stable method. In series with the tunnel diode connect a variable resistor R_4 (see figure 4321-2). Vary R_4 until the slope in the negative resistance appears vertical (infinite slope) on the curve trace. The series resistance R_4 is now equal to the magnitude of the negative resistance ($R_4 = R_d$).

4. Summary. The following conditions shall be specified in the detail specification:

a. Source impedance R_1.

b. Current sensing resistor, R_3.

c. Variable resistor, R_4.

METHOD 4326

SERIES RESISTANCE

1. Purpose. The purpose of this test is to determine the series resistance of the device under the specified conditions.

2. Test circuit. See figure 4326-1.

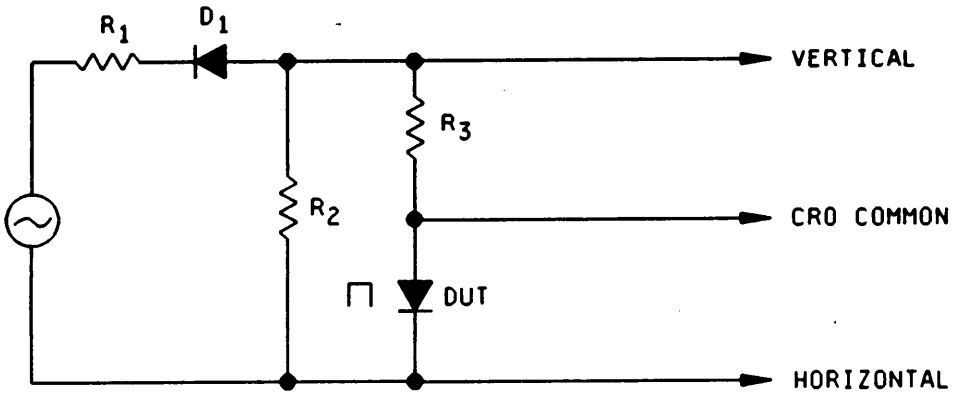

FIGURE 4326-1. Test circuit for series resistance.

3. Procedure. The measurement of the series resistance shall be accomplished for the device when biased in the reverse direction (see figure 4326-1). The linearity of the ohmic region shall be assured and the value of the power dissipation shall be such that no error is introduced as a result of excessive diode heating. The slope of the linear portion of the reverse biased tunnel diode shall be sealed within a specified accuracy in the direct determination of the series resistance of the device.

4. Summary. The following conditions shall be specified in the detail specification:

a. Current sensing resistor R_3.

b. Reverse bias at which R_3 is to be measured.

METHOD 4331

SWITCHING TIME

1. Purpose. The purpose of this test is to measure the switching time of the tunnel diode under the specified conditions.

2. Test circuit. See figure 4331-1.

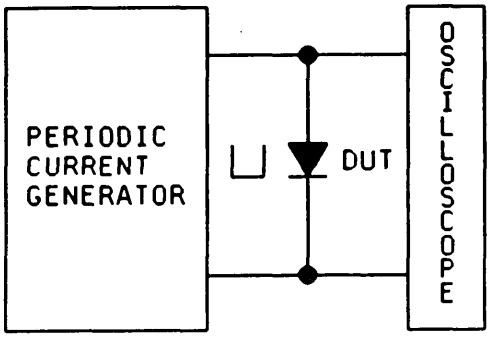

FIGURE 4331-1. Test circuit for switching time.

3. Procedure. A block diagram of the measuring circuit is shown in figure 433-1. To perform the switching time measurement, it is necessary that the maximum generator current be greater than the diode peak current and that changes in generator current during measurement time be negligible compared to I_P. The oscilloscope input probe impedance shall be such that the current absorbed by the probe is at all time less than the peak current of the diode.

4. Summary. The following conditions shall be specified in the detail specification:

a. Generator current.

b. Repetition rate.

c. Rise time of oscilloscope.

5000 Class

High reliability space application tests

METHOD 5001.1

WAFER LOT ACCEPTANCE TESTING

1. Purpose. This method establishes the requirement for the lot acceptance testing of discrete device wafer lots or wafers intended for JANS level use.

2. Apparatus. The apparatus used shall be in accordance with the apparatus requirements of the methods specified in table 5001-1 conditions. Alternate apparatus may be used when approved by the qualifying activity.

3. Procedure. The performance of the wafer lot acceptance tests shall be in accordance with the conditions specified in table 5001-1. Alternate test procedures may be used when approved by the qualifying activity. If a lot fails a test under the level I sample plan and the manufacturer elects to revert to the level 11 plan for that test (if permitted by table 5001-1), all wafers successfully passing the test shall be considered the lot for the remainder of the tests. All wafers failing the level II test shall be removed from the lot. Data obtained from all tests shall be recorded. The sequence of the tests in table 5001-1 does not have to be adhered to; however, the tests must be performed at the point in the processing (if specified) required in the conditions column of table 5001-1. Where limits are based on tolerances about an "approved design nominal", the nominal shall be stated in DESC Design and Construction Sheet, DESC Form 36D, submitted for approval by the qualifying activity.

4. Summary. The following conditions shall be specified in the applicable detail. specification:

a. Requirements or limits, if other than those in table 5001-1.

b. Alternate test methods, procedures, or equipment other than those specified in table 5001-I.

TABLE 5001-I. Wafer lot acceptance tests.

Tests	Conditions	Limits	Sample plan	
			Level I	Level II
1. Wafer thickness	MIL-STD-977, method 1580. Measurements shall be performed after final back lap or polish. All readings shall be recorded.	Maximum deviation equal to or less than 20 percent of the approved design nominal.	Two wafers per lot. Reject lot if any measurement exceeds limits or revert to level II plan.	Each wafer. Reject any wafer with measurement exceeding limits.
2. Metallization thickness	MIL-STD-977, method 5500. All readings shall be recorded.	A. For devices with a conductor whose design nominal thickness is less than or equal to 35 kÅ, the maximum deviation shall be ±30 percent of the approved design nominal. For nominal metallization thicknesses greater than 35 kÅ, the maximum deviation shall be ±25 percent.	One wafer (or monitor) per lot. Reject lot if measurement exceeds limit or reverts to level II.	Each wafer. Reject any wafer with measurement exceeding limits.
		B. All other types. Conductor with 8 KÅ minimum 1/ thickness and a maximum deviation equal to or less than 10 percent of the approved design nominal or ±2kÅ, whichever is greater.	One wafer (or monitor) per lot. Reject lot if measurement exceeds limit or reverts to level II.	Each wafer. Reject any wafer with measurement exceeding limits.
3. SEM	MIL-STD-750, method 2077	MIL-STD-750, method 2077	MIL-STD-750, method 2077. Lot acceptance.	MIL-STD-750, method 2077. Single wafer
4. Glassivation thickness	MIL-STD-977, method 5500. All readings shall be recorded.	Maximum deviation of 30 percent from approved design nominal and minimum thickness of 6,000Å of SiO_2 or 2,000Å of Si_3N_4 as applicable.	Two wafers (or monitor) per lot. Reject lot if measurement exceeds limits or reverts to level II.	Each wafer. Reject any wafer with measurement exceeding limits.
5. Gold backing thickness (when applicable)	MIL-STD-977, method 5500. All readings shall be recorded.	Maximum deviation of 30 percent from the approved design nominal.	One wafer (or monitor) per lot. Reject lot if measurement exceeds limits or reverts to level II.	Each wafer. Reject any wafer with measurement exceeding limits.

1/ For transistors whose design nominal metallization thickness is less than 8 kÅ, minimum allowable thickness shall be specified in the applicable detail specification.

METHOD 5002

CAPACITANCE-VOLTAGE MEASUREMENTS TO DETERMINE OXIDE QUALITY

1. Purpose. The purpose of this test is to determine the quality of an oxide layer as indicated by capacitance-voltage measurements of a metal-oxide semiconductor capacitor. The overall shape and position of the initial C/V curve can be interpreted in terms of the charge" density, and to a certain extent charge type, at the oxide-semiconductor interface. By applying an appropriate bias while heating the sample to a moderate temperature (e.g., +200°C), the mobile ion contamination level of the sample oxide may be determined.

2. Apparatus/materials. Capacitance-voltage plotting system complete with heated/cooled stage and probe (Princeton Applied Research Model 410, MSI Electronics Model 868 or equivalent). A C/V plotter may be constructed from the following components (see figure 50023.3-1 for equipment setup).

2.1 Manual setup.

a. L-C meter (Boonton 726 or equivalent).

b. X-Y recorder (hp 70356 or equivalent).

c. DC voltmeter (Systron Dormer 7050 or equivalent)

d. DC power supply, 0-100 volts.

e. Heated/cooled stage (Thermochuck TP-36 or equivalent).

f. Probe in micromanipulator.

2.2 Automatic C/V plotter. (CMS-16 or equivalent).

3. Suggested procedure.

3.1 Sample preparation.

a. The sample is typically a silicon wafer on which has been grown the oxide to be measured, or wafers with known clean oxide which is exposed to a furnace at temperature to measure the furnace cleanliness. An array of metal dots on the surface of the oxide provides the top electrodes of the metal-oxide-semiconductor capacitors. The metal may either have been deposited through a shadow mask to form the dots, or it may have been deposited uniformly over the oxide surface and then etched into the dot pattern by photolithographic techniques. Cleanliness of the metal deposition is paramount. Contamination introduced during metal deposition is as catastrophic to the oxide quality as is contamination introduced during oxide growth. The metal shall have been annealed, except in cases where the method is being used to investigate the effectiveness of annealing.

NOTE: This test may also be used to determine metal deposition system cleanliness when used with oxide samples known to be contamination free.

b. The minimum dot size should be such that the capacitance of the MOS capacitor is > 20 pF.

c. The oxide thickness is typically 1,100 Å. Reduced sensitivity results from oxide thickness greater than 2,000 Å.

d. The backside of the sample shall have the oxide removed to expose the silicon. The backside may have metal, such as aluminum or gold deposited on it.

3.2 C/V plot (at room temperature).

a. Place the wafer on the heated/cooled stage. Use vacuum to hold the wafer firmly in place.

b. Zero the capacitance meter as necessary, place the paper in X-Y plotter and set-up the voltage source for the desired ranged.

c. Select the capacitor dot to be measured and carefully lower the probe to contact it.

d. Lower the pen on the X-Y plotter and sweep the voltage over the desired range so a C/V trace for an N-type substrate or P-type substrate, similar to that shown on figure 5002-2 is obtained.

NOTE: If an anomalous trace is obtained, it may be because the capacitor is leaking or shorted. In this case, another dot should be selected.

3.3 Mobile ion drift.

a. Use the capacitor dot measured in 3.2.d.

b. With the probe making good contact, apply a positive bias of 10_{10} v/cm to the capacitor dot . (For a 1,000 A thick oxide, this is a 10-volt bias.) A different voltage is acceptable, if the manufacturer can demonstrate effectiveness.

c. Heat the sample to +300°C ±5°C with the bias applied. Hold at this temperature for three minutes (different times may be acceptable if the manufacturer can demonstrate effectiveness) .

d. With the bias still applied, cool the sample to room temperature (the heating and cooling cycle can be automatically programmed if the Thermochuck system is used).

NOTE: Be certain that the probe does not lose contact with the capacitor dot during the heat/cool cycle. If it should, the test is invalid and should be repeated.

e. Lower the pen on the X-Y plotter and sweep the voltage over the range necessary to obtain a C/V trace similar to that obtained in 3.2.d. The trace may be displaced on the voltage scale from the original trace, but should be parallel to the original trace. Label this trace as the (+) trace.

f. Apply a negative bias of the same magnitude selected in 3.3.b to the capacitor dot and repeat steps 3.3.c and 3.3.d.

g. Lower the pen on the X-Y plotter and sweep the voltage over the range again. This trace may be displaced from the two previous traces and should be labeled as the (-) trace.

h. An automatic system that performs equivalent functions may be substitued for steps 3.3.b and 3.3.g.

3.4 Interpretation.

a. Determine the ΔV_{FB} (voltage difference between original trace and bias trace, taken at 90 percent capacitance level (see figure 5002-2)).

b. Determine the mobile ion contamination concentration, N_o, as follows:

$$N_o = \frac{\epsilon 0 \; K_{ox} \; \Delta V_{FB}}{q \; t_{ox}}$$

Where: $\epsilon 0$ = Permittivity of free space (8.85×10^{-12} coulomb $volt^{-1} m^{-1}$).

K_{ox} = Dielectric constant of the oxide (3.8 for silicon dioxide).

q = The charge on an electron (1.6×10^{-19} coulomb).

t_{ox} = Oxide thickness (in meters).

Example:

ΔV_{FB} (measured from C/V curves similar to those shown on figure 5002-2) = 1.4 V.

t_{ox} (measured on wafer prior to metal deposition) = 950 Å.

$$N_o = \frac{(8.85 \times 10^{-12})\ (3.8)\ (3.14)}{(1.6 \times 10^{-19}\ (950 \times 10^{-10})} \begin{array}{l} = 3.1 \times 10^{15}/meter^2 \\ = 3.1 \times 10^{11}/cm^2 \end{array}$$

So, the mobile ion contamination-level is 3.1×10^{11} mobile ions per square centimeter in this example.

c. Considerably more information concerning the oxide and the semiconductor substrate can be obtained from interpretation of the C/V trace.

4. Summary.

4.1 Calibration. The voltage scale calibration of the X-Y plotter should be checked against the DVM during set-up. Other instruments should be calibrated at regular intervals.

4.2 Accuracy. The voltage accuracy obtainable is ±0.1 volt and the Δ VFB accuracy obtainable is ±0.2 volt. The practical lower limit of detectability of mobile ion contamination is on the order of $2 \times 10^{11}/cm^2$.

4.3 Documentation. Record results in appropriate control document.

Reference:

Whelon, N.V., "Graphical Relation Between Surface Parameters of Silicon, to be Used in Connections with MOS Capacitance Measurements", Phillips Res. Apt., 620-630 (1965).

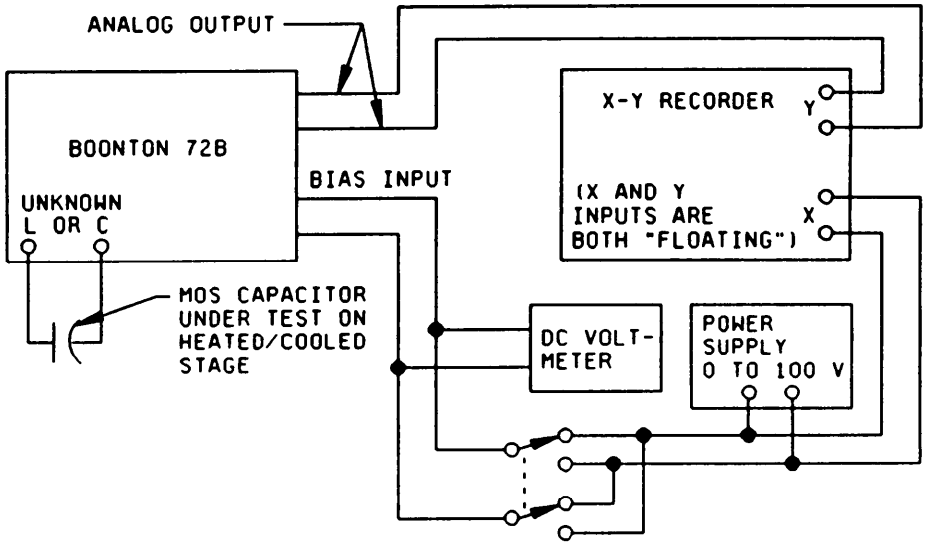

FIGURE 5002-1. Diagram of equipment set-up for measuring relationship of metal-insulator-semi conductor structures.

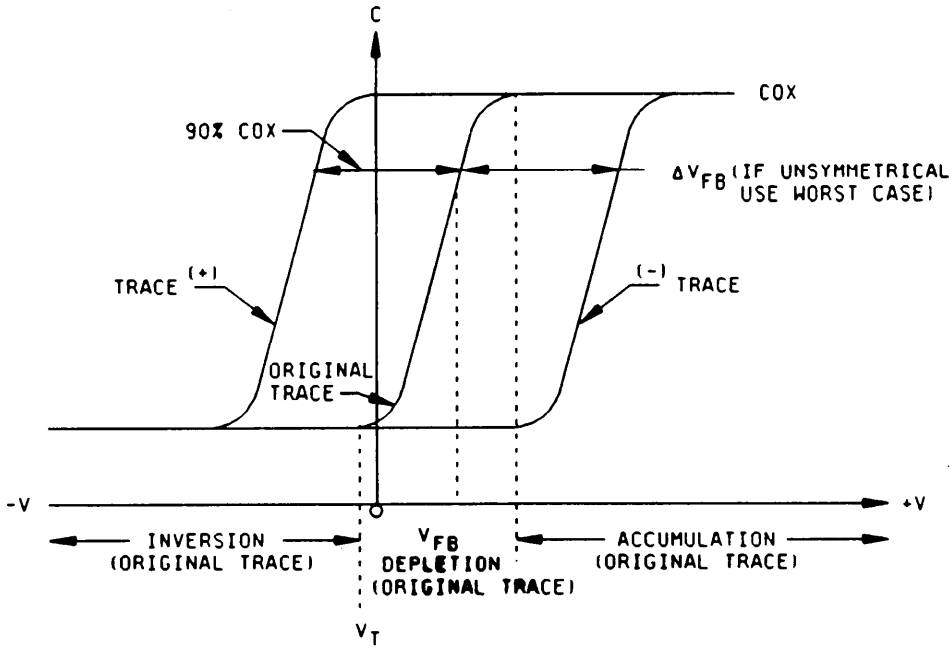

FIGURE 5002-2. C/V traces.

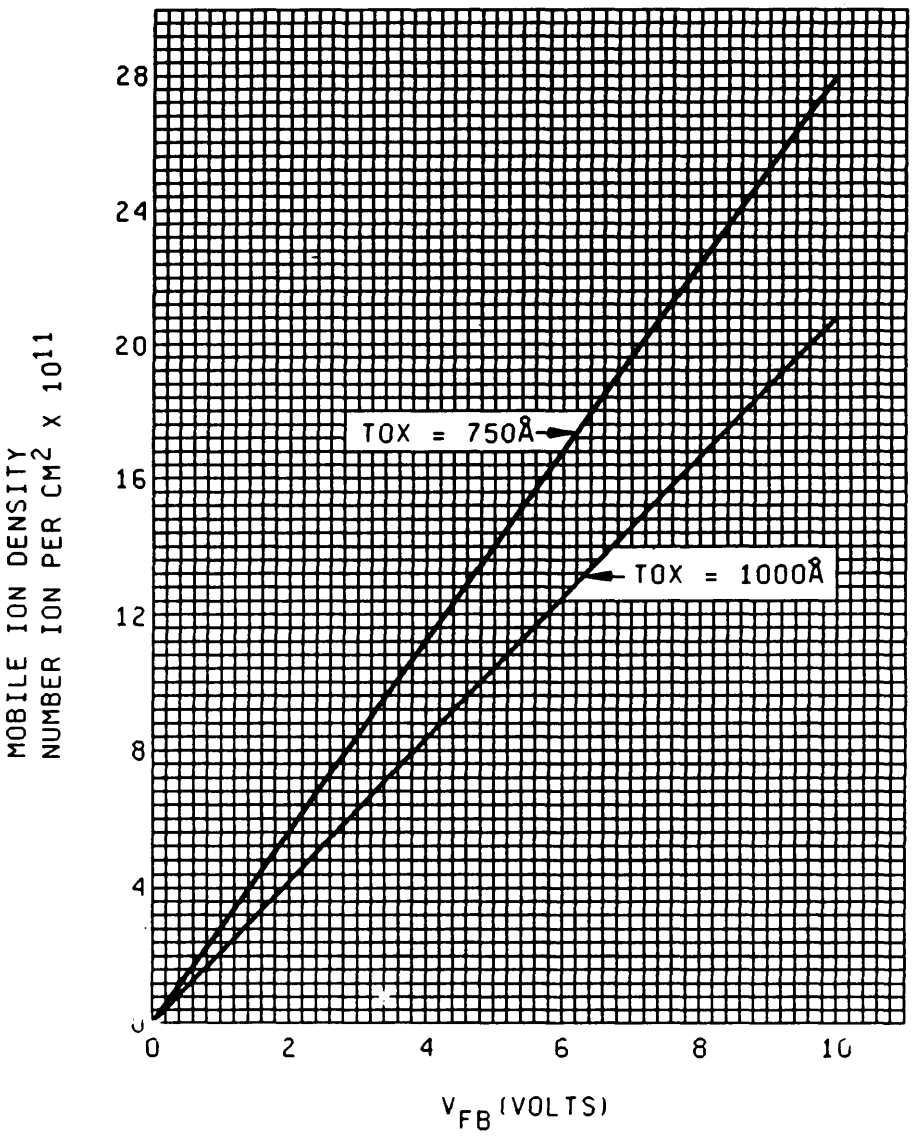

FIGURE 5002-3. Mobile ion density versus voltage shift (V_{FB}).

METHOD 5010

CLEAN ROOM AND WORKSTATION AIRBORNE PARTICLE CLASSIFICATION AND MEASUREMENT

1. Purpose. This test method provides a classification system for and means of measuring air cleanliness. It is intended to be used in conjunction with the environmental controls specified in MIL-S-19500.

2. Air cleanliness classes. There are three classes defined by this test method. Classifications are based upon particle count with a maximum allowable number of particles per unit volume 0.5 micron or larger or 5.0 microns and larger. Particle counts are to be taken during normal work activity periods and at a location which will yield the particle count of the air as it approaches the work Location.

2.1 Class 100 (3.5). Particle counts must not exceed a total of 100 particles per cubic foot (3.5 particles per liter) of a size of 0.5 micron or larger.

2.2 Class 1000 (35). Particle counts must not exceed a total of 1,000 particles per cubic foot (35 particles per liter) of a size of 0.5 micron or larger of 7 particles per cubic foot (0.25 particles per liter) of a size 5.0 microns and larger.

2.3 Class 10,000 (350). Particle counts must not exceed a total of 10,000 particles per cubic foot (350 particles per liter) of a size of 0.5 micron or larger or 65 particles per cubic foot (2.3 particles per liter) of a size of 5.0 microns and larger.

2.4 Class 100,000 (3,500). Particle counts must not exceed a total of 100,000 particles per cubic foot (3,500 particles per liter) of a size of 0.5 micron or larger or 700 particles per cubic foot (25 particles per liter) of a size of 5.0 microns and larger.

3. Particle counting methods. For proof of meeting the requirements of the class of clean room or clean work station, one or more of the following particle counting methods shall be employed on the site of use.

3.1 Particle sizes 0.5 micron and larger. The equipment to be used must employ the light scattering measurement principle as specified in ASTM F50.

3.2 Particle sizes 5.0 micron and larger. A microscopic counting of particles collected on a membrane filter, through which a sample of the air to be measured has been drawn, may be used in lieu of the light scattering measurement principle as specified in ASTM F25 and SAE-ARP-743.

4. Monitoring techniques. Appropriate equipment shall be selected and monitoring routines established to measure the air cleanliness levels under normal use conditions.

5. Items to be specified. The referenced general specification shall specify the following information:

a. The class of the workstation or clean room.

b. The frequency of test. Unless otherwise specified, this frequency shall be, at a minimum, once per month per working shift.

c. The locations within the clean environment to be monitored.

STANDARDIZATION DOCUMENT IMPROVEMENT PROPOSAL

INSTRUCTIONS

1. The preparing activity must complete blocks 1, 2, 3, and 8. In block 1, both the document number and revision letter should be given.

2. The submitter of this form must complete blocks 4, 5, 6, and 7.

3. The preparing activity must provide a reply within 30 days from receipt of the form.

NOTE: This form may not be used to request copies of documents, nor to request waivers, or clarification of requirements on current contracts. Comments submitted on this form do not constitute or imply authorization to waive any portion of the referenced document(s) or to amend contractual requirements.

I RECOMMEND A CHANGE:	1. DOCUMENT NUMBER MIL-STD-750D	2. DOCUMENT DATE (YYMMDD) 95-02-28

3. DOCUMENT TITLE
TEST METHODS FOR SEMICONDUCTOR DEVICES

4. NATURE OF CHANGE (Identify paragraph number and include proposed rewrite, if possible. Attach extra sheets as needed.)

5. REASON FOR RECOMMENDATION

6. SUBMITTER

a. NAME (Last, First, Middle initial)	b. ORGANIZATION	
c. ADDRESS (Include Zip Code)	d. TELEPHONE (Include Area Code) (1) Commercial (2) AUTOVON (If applicable)	7. DATE SUBMITTED (YYMMDD)

8. PREPARING ACTIVITY

a. NAME Alan Barone	b. TELEPHONE (Include Area Code) (1) Commercial 513-296-6048 (2) AUTOVON 986-6048
c. ADDRESS (Include Zip Code) Defense Electronics Supply Center Attn: DESC-ELDT Dayton, Ohio 45444-5765	**IF YOU DO NOT RECEIVE A REPLY WITHIN 45 DAYS, CONTACT:** Defense Quality and Standardization Office 5203 Leesburg Pike, Suite 1403, Falls Church, VA 22041-3466 Telephone (703) 756-2340 AUTOVON 289-2340