A Description of the IMAGE FEA Work

An Interpoint DC/DC converter failed during the vacuum test. Failure analysis revealed that the failure was due to a lifted solder joint that connects a current-carrying copper wire to the substrate. It was obvious that the pressure variation during the vacuum test put the thin metallic lid in up-and-down motion. Since the whole internal structure of the converter is all physically attached (see Fig. 1), the cyclic motion of the lid fatigued the solder joint.

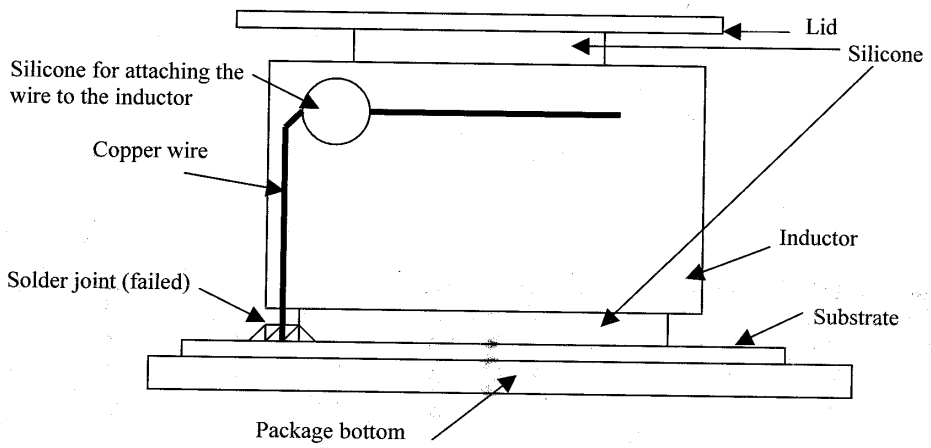

Fig. 1

Furthermore, a careful examination of several identical Interpoint parts showed that the copper wire has substantial variation in geometry. The variation can be summarized below:

-- very close to the inductor (Fig. 2)
-- not so close to the inductor (Fig. 3)
-- nearly straight-line down to the solder joint (Fig. 4)
-- curved line down to the solder joint (Fig. 5)

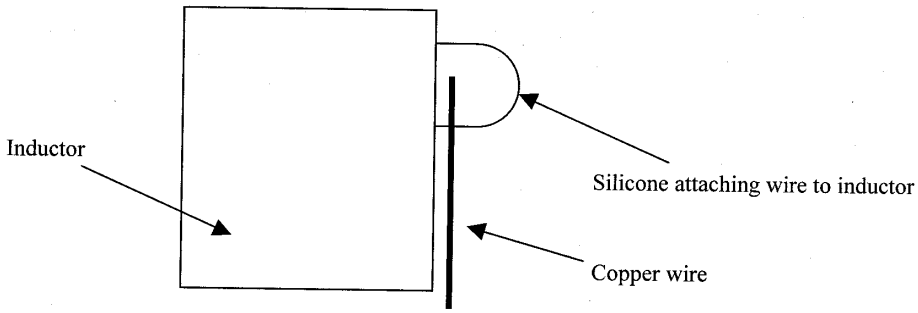

Fig. 2

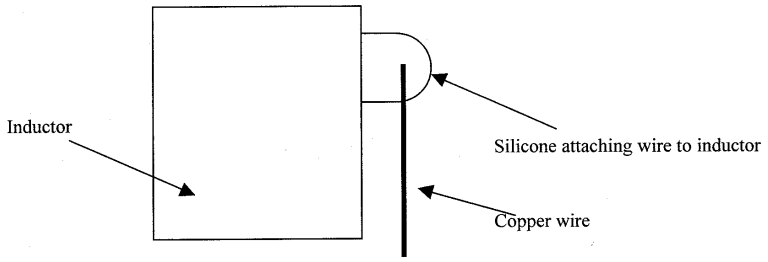

Fig. 3

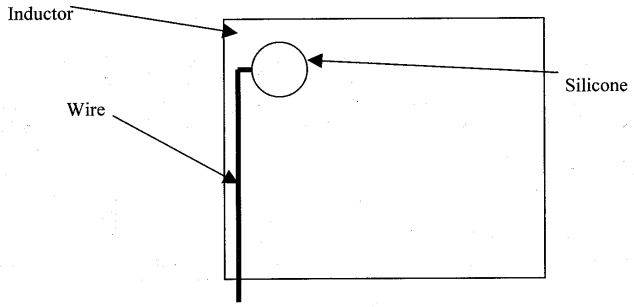

Fig. 4

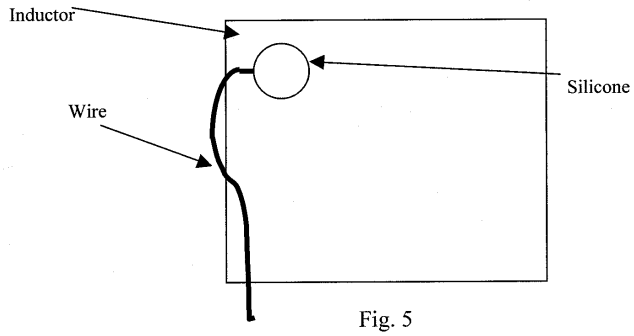

Fig. 5

From the observation of the wire geometry, we believe it is important to understand the stress distribution for each scenario under the same deflection condition of the lid. Thus several FEA models were built to reflect the wire geometry variations.

The first two FEA models are both for straight-line wire geometry with the first model being close to the inductor and second being not so close to the inductor (Figs. 6 and 7). Given a nominal deflection of the lid, the Von Mises stress of the solder material was way beyond the 63:37 solder's yield strength, indicating that fatigue is likely to occur. For the same lid deflection, the second case showed that the Von Mises stress on the solder was right at the level of the yield strength and leaves no safety margin for the solder joint. Thus we conclude that, for this very converter, a straight-line wire vertically interconnected to the substrate is not acceptable for the consideration of solder joint integrity.

From the above two modeling results, we know that the copper wire needs to be placed not so close to the inductor. The guideline from the FEA results demonstrated that the gap between the wire and the wall of the inductor needs practically to be at least 30 mil. Since we want to determine which wire geometry is the best in terms of producing the minimum stress to the solder material, there is no need to model the close-to-inductor scenario for curved wire case. Thus modeling the scenario of curved wire that is apart from the inductor wall is sufficient to identify the desirable geometry of the wire.

Fig. 8 shows the FEA model for the desirable configuration. Von Mises stress on the solder for this model is under the yield limit of the eutectic solder. For the same lid deflection, the solder joint connecting the wire to the substrate shall be safe without fatigue failure. As a practical guideline, the curvature of the bent part shall be at least R=75 mil.

Based on the FEA analyses, we suggest that IMAGE Project needs to inspect each and every Interpoint converter to be used as flight hardware. Such inspection may be performed using 3-D X-ray to ensure a sufficient gap between the wire and the wall of the inductor, as well as the bent curvature of the wire in its vertical path to the solder joint.

Mark S. Fan
301-286-0965

[EOF]

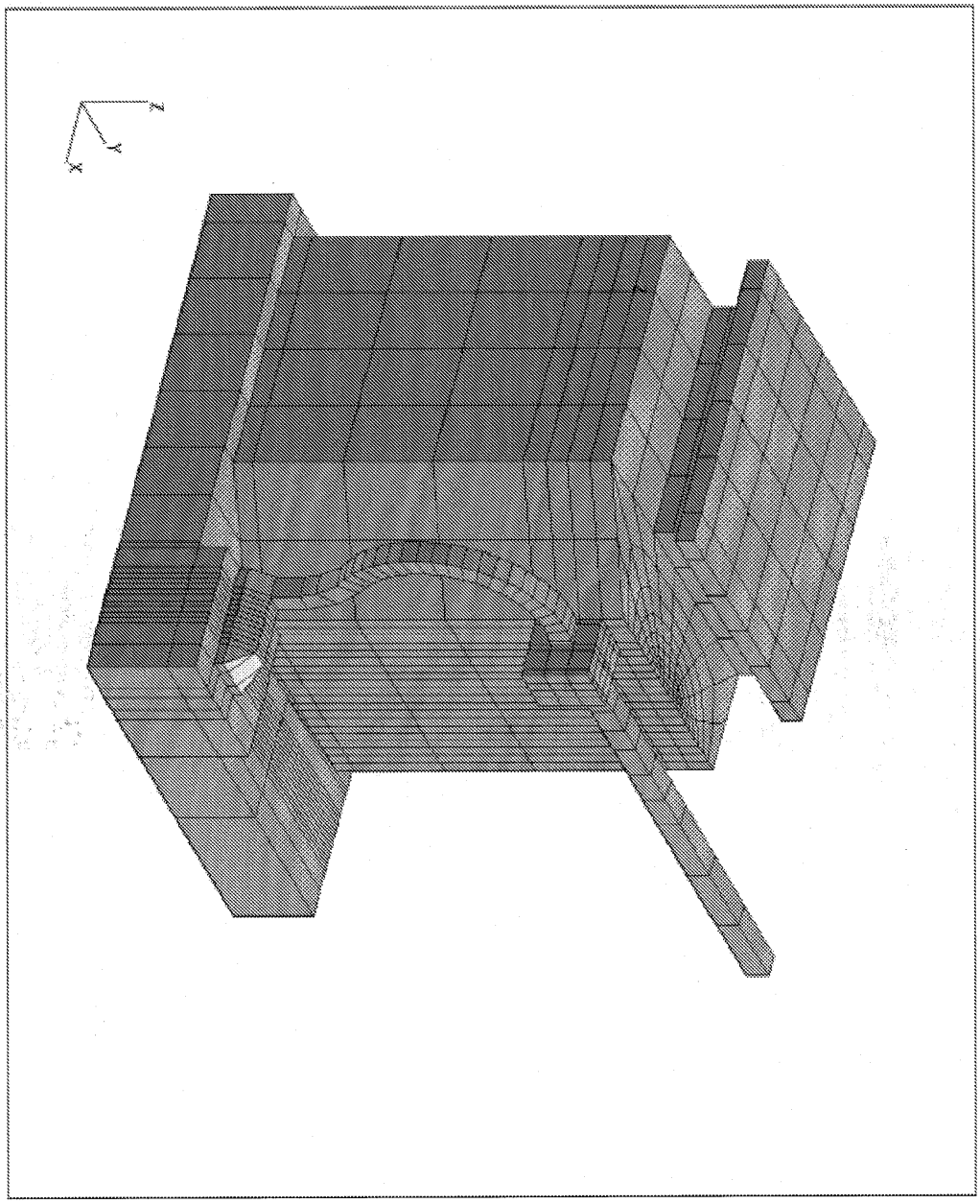
Z
Y
X