REVISIONS			
SYMBOL	**DESCRIPTION**	**DATE**	**APPROVAL**

SHEET REVISION STATUS

SH	1	2	3	4	5	6	7	8	9	10	11	12	13	14	15	16	17	18	19	20
REV	-	-	-	-	-	-	-	-	-	-	-	-	-	-	-					
SH	21	22	23	24	25	26	27	28	29	30	31	32	33	34	35	36	37	38	39	40
REV																				

ORIGINATOR: Thomas J. Perry/PSGS Thomas J Perry	**DATE** 3/11/08	**FSC:** 5905
APPROVED: Thomas J. Perry/PSGS Thomas J Perry	3/11/08	Thermistor (Thermally Sensitive Resistor), Chip, Negative Temperature Coefficient or Positive Temperature Coefficient
CODE 562 APPROVAL: Marcellus A. Proctor/GSFC Marcellus A Proctor	3/11/08	
CODE 562 SUPERVISORY APPROVAL: Kusum K Sahu/GSFC Kusum Sahu	3.11.08	
ADDITIONAL APPROVAL:		**S-311-P-827**

NATIONAL AERONAUTICS AND SPACE ADMINISTRATION
GODDARD SPACE FLIGHT CENTER
GREENBELT, MARYLAND 20771

CAGE CODE: 25306

1. SCOPE

Purpose. This test specification covers the screening and qualification requirements for surface mounted, end-banded chip thermistors. Parts tested to this specification shall be considered acceptable for use in NASA space programs specifying quality level (Grade) 1 parts.

Goddard part number. Parts procured in complete compliance with the requirements of this specification shall be identified by a Goddard part number of the following form:

311P827	-01	S	5002
GSFC Prefix	Dash Number (1.2.1)	Termination Code (1.2.2)	$R_{25°C}$ Resistance (1.2.3)

1.2.1 Dash Number. The configuration specifies the package style and resistance ratio (i.e. resistance versus temperature characteristics) of the part. See Table I for configuration options and Table VI for Resistance Ratio Characteristics.

Table I. Dash Numbers

Dash Number	Package Style	Resistance Ratio	Resistance Values	Tolerance Limits @ Selected Temperatures (± %R)					Thermistor Type (NTC or PTC)
				-40°C	0°C	**+25°C**	+70°C	+100°C	
01	Figure A (0805)	B	50K Ω	6.70	2.50	**1.00**	1.70	2.90	NTC
02	Figure A (0805)	B	50K Ω	10.0	4.00	**2.00**	3.40	5.80	NTC
03	Figure A (0805)	M	100K Ω	5.90	2.30	**1.00**	1.60	2.75	NTC
04	Figure A (0805)	M	100K Ω	10.0	4.00	**2.00**	3.20	5.50	NTC
31	Figure A (0805)	E	150 Ω to 2.0K Ω	12.8	3.00	**1.00**	4.60	7.00	PTC
32	Figure A (0805)	E	150 Ω to 2.0K Ω	14.4	4.00	**2.00**	5.60	9.00	PTC
33	Figure B (0303)	E	75 Ω to 1.5K Ω	12.8	3.00	**1.00**	4.60	7.00	PTC
34	Figure B (0303)	E	75 Ω to 1.5K Ω	14.4	4.00	**2.00**	5.60	9.00	PTC

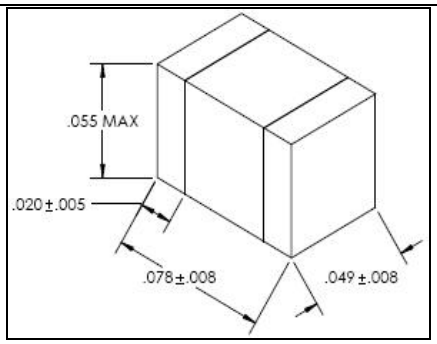

Figure A. EIA 0805 SMD Package

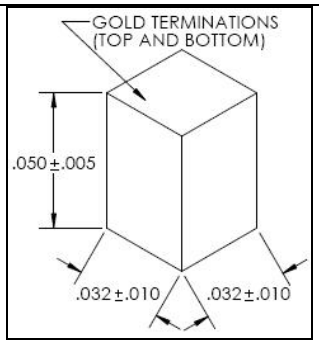

Figure B. Hybrid Die Package

1.2.2 Termination Code. The termination material options are listed below.

For "Figure A" style parts:
S = Sn/Pb, solderable with a minimum Pb (lead) percentage of 3%
G = Au, epoxy bondable

For "Figure B" style parts:
W= Au, wire-bondable

1.2.2.1 Barrier Metallization. The barrier metallization for the "S" and "G" terminations shall be Nickel or approved equivalent. The metallization shall be a minimum of 50 microinches.

1.2.3 $R_{25°C}$ Resistance. The $R_{25°C}$ resistance is specified using the first 3 significant digits and the amount of zeros. For example: 50K Ω = 5002.

1.2.4 Performance Characteristics.

1.2.4.1 Zero-power resistance. The zero-power resistance values at +25°C shall be as specified in Table I and the specific part number. Zero-power resistance multipliers at temperatures over the range –55°C to +125°C are specified in Table VI.

1.2.4.2 Interchangeablility*. Thermistor **dash numbers 01-04** shall be interchangeable with other thermistors of the same dash number to the following accuracies over the specified temperature range:

a. Odd dash numbers shall be:
   1.) ±0.5°C from (0° to +70°C)
   2.) ±1.0°C from (–40°C to +100°C)
   3.) ±1.5°C from (–55°C to +125°C)

b. Even dash numbers shall be:
   1.) ±1.0°C from (0° to +70°C)
   2.) ±2.0°C from (–40°C to +100°C)
   3.) ±3.0°C from (–55°C to +125°C)

NOTE:** ***Interchangeability does not apply to Dash Numbers 31-34. See Table II for applicable tolerances for Dash Numbers 31-34.

1.3 Thermistor ratings.

a. Zero-power resistance @ +25°C: See Paragraph 1.2.4.1.

b. Power rating: 125 mW @ +25°C

c. Operating temperature range: -55°C to +125°C

d. Storage temperature range: -65°C to +150°C

e. Dissipation constant: 2.0 mW/°C minimum

f. Thermal time constant: 8 seconds maximum

2. APPLICABLE DOCUMENTS

The following documents, of the issue in effect on the date of testing, form a part of this specification to the extent specified herein:

SPECIFICATIONS

GSFC

EEE-INST-002	Instructions for EEE Parts Selection, Screening, Qualification, and Derating

MILITARY

MIL-PRF-32192	Resistor, Chip, Thermal (Thermistor), General Specification for

STANDARDS

MIL-STD-202	Test Methods for Electronic and Electronic Parts
IPC/EIA J-STD-002A	Solderability Tests for Component Leads, Terminations, Lugs, Terminals and Wires
ASTM E595	Standard Test Method for Total Mass Loss and Collected Volatile Condensable Materials from Outgassing in a Vacuum

3. REQUIREMENTS

3.1 Single Lot Traceability. All parts delivered against each purchase order line item shall be traceable through the lot date code to one single production lot.

3.2 Visual inspection. When tested as specified in 4.5.1, thermistors shall be of the type specified by the manufacturer and free from scratches, cracks, chips, surface blemishes, and any other defects that will affect life or serviceability.

3.3 Mechanical inspection. Thermistors shall meet the size requirements in the

applicable Figure A or Figure B.

3.4 Preconditioning. All parts shall be preconditioned in accordance with 4.5.2 prior to the start of screening.

3.5 Zero-power resistance. When tested as specified in 4.5.3, the zero-power resistance value shall be as specified in part number and Table I with the applicable R_{25C} tolerance from Table II.

3.6 Thermal shock. When tested as specified in 4.5.4, thermistors shall exhibit no evidence of mechanical damage.

3.7 Resistance temperature characteristic. When tested as specified in 4.5.5, the zero-power resistance values shall be within the allowable tolerance at each specified temperature test point in accordance with Table II.

Table II. Resistance Tolerance at Selected Temperatures.

Temperature (°C)	Tolerance Limits for Respective Dash Numbers at Selected Temperatures (± %R)								
	01	02	03	04		31	32	33	34
-55	10.0	12.0	10.0	12.0		15.0	17.0	15.0	17.0
-40	6.70	10.0	5.90	10.0		12.8	14.4	12.8	14.4
0	2.50	4.00	2.30	4.00		3.00	4.00	3.00	4.00
+25	1.00	2.00	1.00	2.00		1.00	2.00	1.00	2.00
+70	1.70	3.40	1.60	3.20		4.60	5.60	4.60	5.60
+100	2.90	5.80	2.75	5.50		7.00	9.00	7.00	9.00
+125	3.90	7.80	3.70	7.40		10.0	12.0	10.0	12.0

3.8 Solderability. When tested as specified in 4.5.6, both end terminations shall exhibit a continuous solder coating free from defects for a minimum of 95% of the critical area of either termination with the following exception: the top surface of the solder pad need not be considered in the evaluation for solderability provided the remaining critical surfaces (bottom, end, and both side pads) meet the criterion.

3.9 Short time overload. When tested as specified in 4.5.7, there shall be no evidence of mechanical damage, and the change in zero-power resistance at +25°C shall not exceed 0.5%.

3.10 Low temperature storage. When tested as specified in 4.5.8, there shall be no evidence of mechanical damage, and the change in zero-power resistance at

+25°C shall not exceed 0.5%.

3.11 High temperature storage. When tested as specified in 4.5.9, there shall be no evidence of mechanical damage and the change in zero-power resistance at +25°C shall not exceed 1.0%.

3.12 Dissipation constant. When tested as specified in 4.5.10, the dissipation constant shall be 2.0 milliwatts per degrees Celsius minimum.

3.13 Thermal time constant. When tested as specified in 4.5.11, the thermal time constant shall be 8 seconds maximum.

3.14 Solder mounting integrity. When tested as specified in 4.5.12, there shall be no evidence of mechanical damage.

3.15 Bondable mounting integrity. When tested as specified in 4.5.13, there shall be no evidence of mechanical damage.

3.16 Wire bond integrity. When tested as specified in 4.5.14, there shall be no evidence of mechanical damage.

3.17 Resistance to soldering heat. When tested as specified in 4.5.15, there shall be no evidence of mechanical damage, and the change in zero-power resistance at +25°C shall not exceed 2.0%.

3.18 Resistance to bonding exposure. When tested as specified in 4.5.16, there shall be no evidence of mechanical damage and the change in zero-power resistance at +25°C shall not exceed 2.0%.

3.19 Moisture resistance. When tested as specified in 4.5.17, there shall be no evidence of mechanical damage, and the change in zero-power resistance at +25°C shall not exceed 1.0%.

3.20 Load life. When tested as specified in 4.5.18, there shall be no evidence of mechanical damage, and the change in zero-power resistance at +25°C shall not exceed 1.0%.

3.21 High temperature exposure. When tested as specified in 4.5.19, there shall be no evidence of mechanical damage and the change in zero-power resistance at +25°C shall not exceed 1.0% after 100 hours and 2.0% after 1000 hours.

3.22 Vibration, high frequency. When tested as specified in 4.5.20, there shall be no evidence of mechanical damage and the change in zero-power resistance at +25°C shall not exceed 2.0%.

3.23 Shock, specified pulse. When tested as specified in 4.5.21, there shall be no evidence of mechanical damage and the change in zero-power resistance at +25°C shall not exceed 2.0%.

3.24 Immersion. When tested as specified in 4.5.22, there shall be no evidence of mechanical damage and the change in zero-power resistance at +25°C shall not exceed 2.0%.

3.25 Thermal outgassing. When tested as specified in 4.5.23, materials must meet outgassing limits of 1.0% total mass loss (TML) maximum and 0.1% collected volatile condensable materials (CVCM) maximum. Materials listed in the Latest Revision of "NASA Reference Publication 1124" that meet TML and CVCM limits are acceptable for use without further testing.

4. QUALITY ASSURANCE PROVISIONS

4.1 Classification of inspection. Inspection requirements specified herein are classified as follows:

a. Qualification Inspection (see 4.4)
b. Quality Conformance Inspection (see 4.3)

4.2 Inspection Conditions. Unless otherwise specified herein, the thermistors shall be manufactured and tested in accordance with the quality assurance provisions of MIL-PRF-32192.

4.2.1 Test equipment and inspection facilities. Test and measuring equipment used shall be properly calibrated and of sufficient accuracy to permit performance of the inspections specified herein.

4.3 Quality Conformance Inspection. Quality Conformance Inspection (QCI) shall be performed on 100% of product in accordance with Table III and in the order shown.

4.3.1 Screening rejects. Parts failing screening inspection shall not be used in space flight applications. In the event the number of screening rejects exceeds the Percent Defective Allowable (PDA) in Table III, the entire lot shall be rejected for space flight applications.

4.4 Qualification inspection. Qualification inspection shall be performed in accordance with Table IV.

4.4.1 Sample sizes and test routine. Sample sizes shall be in accordance with Table IV. Random samples shall be selected from product passing 100% Screening Requirements per Table III and subdivided as specified for Group 1, Group 2, Group 3, Group 4, Group 5, and Group 6 testing. Inspections within each group shall be performed in the order shown.

Table III. Screening Requirements.

Sequence	Inspection	Requirement paragraph	Method paragraph	Sample size
1	Visual inspection	3.2	4.5.1	100%
2	Mechanical inspection	3.3	4.5.1	3
3	Preconditioning	3.4	4.5.2	100%
4	Lot Serialization	N/A	N/A	100%
5	Zero-power resistance	3.5	4.5.3	100%
6	Thermal shock	3.6	4.5.4	100%
7	High temperature storage	3.11	4.5.9	100%
8	Zero-power resistance (ΔR, zero power, to specification)	3.5	4.5.3	100%
9	Resistance temperature characteristic	3.7	4.5.5	100%
10	Visual Inspection	3.2	4.5.1	100%
11	PDA (from Sequence 4-8) 1/	4.3.1	5% maximum	

1/ Parts that meet the required ΔR (zero-power) but fall outside the allowed R+25°C resistance tolerance shall be removed from the lot but not count toward the PDA.

4.4.2 Failures. Failures in excess of those allowed in Table IV shall be cause for refusal to grant qualification.

4.4.3 Inspection report. Qualification test data and the qualification test samples shall be submitted to the following activity:

NASA/GSFC
Greenbelt, MD 20771
Attn: QPLD Administrator
Code 562

Table IV. Lot Qualification inspections. 5/

Inspection	Requirement paragraph	Method paragraph	Sample size (Accept No.)
Group 1			5(0) 1/
Solderability 2/	3.8	4.5.6	
Group 2			10(0)
Short time overload	3.9	4.5.7	
Low temperature storage	3.10	4.5.8	
Dissipation constant	3.12	4.5.10	
Thermal time constant	3.13	4.5.11	
Solder mounting integrity 2/	3.14	4.5.12	
Bondable mounting integrity 3/	3.15	4.5.13	
Wire bonding integrity 4/	3.16	4.5.14	
Group 3			10(0)
Resistance Temperature Characteristic	3.7	4.5.5	
Resistance to soldering heat 2/	3.17	4.5.15	
Resistance to bonding exposure 3/	3.18	4.5.16	
Moisture resistance	3.19	4.5.17	
Group 4 6/			10(0)
Load life	3.20	4.5.18	
Group 5			10(0)
High Temperature Exposure	3.21	4.5.19	
Vibration, high frequency	3.22	4.5.20	
Shock, specified pulse	3.23	4.5.21	
Immersion	3.24	4.5.22	
Group 6 7/			10(0)
Thermal outgassing	3.25	4.5.23	

Notes:

1/ Samples from Groups 2 or 5 are acceptable for Group 1 testing

2/ Only applicable to termination “S”

3/ Only applicable to termination “G” and “W”

4/ Only applicable to termination “W”

5/ Samples submitted to Table IV must have passed 100% Screening Requirements per Table III

6/ Group 4 Acceptance Inspection may be satisfied by equivalent or more stressful testing performed on identical or appropriately similar parts within the previous 12 months

7/ Materials listed in the Latest Revision of “NASA Reference Publication 1124” that meet TML and CVCM limits are acceptable for use without further testing.

4.4.4 Annual requalification. The manufacturer shall submit the following on an annual basis to the address listed in 4.4.3.

(a) Summary of all orders accepted and/or shipped under the provisions of this specification.

(b) A summary of all test results for tests performed in accordance with requirements contained Table IV.

(c) Summaries of any life tests or other special testing performed during the previous year that is pertinent to space flight use of thermistors.

(d) Listing of any catastrophic failures during the previous year with details on failure analysis and corrective action.

4.5 Methods of inspection.

4.5.1 Visual and mechanical inspection (see 3.1 and 3.2). Thermistors shall be visually inspected using 30x magnification for cracks, voids, and other anomalies that may affect the life of the part.

4.5.2 Preconditioning (see 3.3). Thermistors shall be thermal aged at +125°C for 5 days minimum followed by aging at +50°C for an additional 5 days minimum.

4.5.3 Zero-power resistance (see 3.4). Thermistors shall be tested in accordance with MIL-PRF-32192 with the following details and exceptions:

a. The measuring instrument shall be limited to 10 microamperes maximum.

b. All resistance measurements shall be made in a controlled uniform medium maintained at ± 0.01°C.

c. Measure zero-power resistance at +25°C only. The part shall be allowed sufficient time to stabilize prior to recording the resistance.

4.5.4 Thermal shock (see 3.5). Thermistors shall be tested in accordance with Method 107 of MIL-STD-202 with the following details and exceptions:

a. Test Condition B except the low temperature extreme shall be –55°C and the number of cycles shall be 25.

4.5.5 Resistance temperature characteristic (see 3.6). Thermistors shall be tested in accordance with the applicable paragraph of MIL-PRF-32192 with the following details and exceptions:

a. The measuring instrument shall be limited to 10 microamperes maximum.

b. All resistance measurements shall be made in a controlled uniform medium maintained at ± 0.01°C.

c. For screening and qualification, thermistors shall be tested at all temps listed in Table II.

d. Zero-power resistance values for other temperatures may be determined using the multipliers in Table VI.

4.5.6 Solderability (see 3.8). Thermistors shall be tested in accordance with Method 208 of MIL-STD-202. The following details and exceptions shall apply:

a. Test B is applicable.

b. Preconditioning per Category 3 is applicable.

c. The accept/reject criterion per 4.2.2.4.2 of IPC/EIA J-STD-002A is applicable except as modified by para. 3.7 herein.

4.5.7 Short time overload (see 3.9). Thermistors shall be tested in accordance with the applicable paragraph of MIL-PRF-32192 with the following exception:

a. The final zero-power resistance measurement shall be performed per 4.5.3 herein.

4.5.8 Low temperature storage (see 3.10). Thermistors shall be tested in accordance with the applicable paragraph of MIL-PRF-32192 with the following exceptions:

a. The applicable storage temperature shall be -55°C.

b. The final zero-power resistance measurement shall be performed per 4.5.3 herein.

4.5.9 High temperature storage (see 3.11). Thermistors shall be tested in accordance with the applicable paragraph of MIL-PRF-32192 with the following exceptions:

a. The final zero-power resistance measurement shall be performed per 4.5.3 herein.

4.5.10 Dissipation constant (see 3.12). Thermistors shall be tested in accordance with the applicable paragraph of MIL-PRF-32192. The following detail shall apply:

a. Test units shall be suspended in still air using test clips with a minimal amount of contact with the thermistor.

4.5.11 Thermal time constant (see 3.13). Thermistors shall be tested in accordance with the applicable paragraph of MIL-PRF-32192. The following detail shall apply:

a. Test units shall be suspended in still air using test clips with a minimal amount of contact with the thermistor.

4.5.12 Solder mounting integrity (see 3.14). Thermistors shall be tested in accordance with the applicable paragraph of MIL-PRF-32192.

4.5.13 Bondable mounting integrity (see 3.15). Thermistors shall be tested in accordance with the applicable paragraph of MIL-PRF-32192.

4.5.14 Wire bond integrity (see 3.16). Thermistors shall be tested in accordance with the applicable paragraph of MIL-PRF-32192.

4.5.15 Resistance to soldering heat (see 3.17). Thermistors shall be tested in

accordance with the applicable paragraph of MIL-PRF-32192.

4.5.16 Resistance to bonding exposure (see 3.18). Thermistors shall be tested in accordance with the applicable paragraph of MIL-PRF-32192.

4.5.17 Moisture resistance (see 3.19). Thermistors shall be tested in accordance with the applicable paragraph of MIL-PRF-32192.

4.5.18 Load life (see 3.20). Thermistors shall be tested in accordance with the applicable paragraph of MIL-PRF-32192.

4.5.19 High temperature exposure (see 3.21). Thermistors shall be tested in accordance with the applicable paragraph of MIL-PRF-32192.

4.5.20 Vibration, high frequency (see 3.22). Thermistors shall be tested in accordance with the applicable paragraph of MIL-PRF-32192 and MIL-STD-202, Method 204.

4.5.21 Shock, specified pulse (see 3.23). Thermistors shall be tested in accordance with the applicable paragraph of MIL-PRF-32192 and MIL-STD-202, Method 213.

4.5.22 Immersion (see 3.24). Thermistors shall be tested in accordance with the applicable paragraph of MIL-PRF-32192 and MIL-STD-202, Method 104.

4.5.23 Thermal outgassing (see 3.25). Thermistors shall be tested in accordance with ASTM E595.

5. PREPARATION FOR DELIVERY

5.1 Packaging

5.1.1 General. Bulk packaging of thermistors is not permitted. Thermistors must remain serialized.

5.1.2 Package material. All waffle packages and bags must be antistatic.

5.1.3 Serialized waffle packaging: Thermistors shall be placed in 2” x 2” waffle packages containing 100 pockets. The waffle shall be oriented with the “notch” in the upper left-hand corner. Parts must be loaded from left to right and top to bottom.

5.1.4 Waffle package marking. The following marking shall be placed on each waffle package:

a. NASA / GSFC Part Number

b. Lot/date code
c. Manufacturers' name, trademark, or identification
d. Customer name
e. Beginning serial number (located in the upper left corner)
f. Ending serial number (located in the upper right corner)

5.1.5 Bag marking. Waffle packages shall be placed into antistatic bags with the following marking information:

a. NASA / GSFC Part Number
b. Lot/date code
c. Manufacturers' name, trademark, or identification
d. Customer name
e. Customer purchase order number

5.2 Deliverable data and documentation

5.2.1 General. A complete data package must be compiled and sent with each shipment of thermistors. The data shall be printed on paper or supplied on a compact disc in .pdf form.

5.2.2 Data package contents. The following data documentation must be included with each shipment of thermistors:

a. Serialized attributes and variable data for all Screening tests per Table III herein
b. Serialized attributes and variable data for all Lot Qualification tests per Table IV herein
c. Manufacturers' Certificate of Conformance
d. Failure analysis and Corrective action report for any catastrophic failures

6. NOTES

6.1 Ordering data. Acquisition documents should specify the following:

a. Number, title, and date of this specification.
b. Goddard Part Number
c. Quantity

6.2 Qualification provisions. With respect to product requiring qualification, awards will be made only for product that has been tested and approved by GSFC before the time for opening of bids. The attention of the suppliers is called to the following requirement: manufacturers should arrange to have qualification tests made on product which they propose to offer to GSFC to become eligible for awards of contracts or orders for product covered by this specification. The manufacturer shall bear the cost of qualification inspection to this specification. Information pertaining to qualification of product may be obtained from the activity whose address is listed in 4.4.5.

6.3 NOTICE. When GSFC drawings, specifications, or other data are sent for any purpose other than in connection with a definitely related GSFC procurement operation, the United States Government thereby incurs no responsibility nor any obligation whatsoever. The fact that GSFC might have formulated, furnished or in any way supplied the said drawings, specifications, or other data is not to be regarded by implication or otherwise as in any manner licensing the holder or any person or corporation, or conveying any right or permission to manufacture, use, or sell any patented invention that may in any way be related thereto.

Custodian:

Code 562
Goddard Space Flight Center
Greenbelt, MD 20771

6.4 Suggested source(s) of supply. Suggested source(s) of supply are listed herein. Additional sources will be added as they become available.

Vendor	Vendor CAGE	Vendor name and address
A	56866	Quality Thermistor, Inc. 2108 Century Way Boise, ID 83709

Table V. Resistance Ratio Summary.

Resistance vs. Temperature Curve	B	M	E
0°C/+50°C Ratio	9.07	7.58	0.70
+25°C/+125°C Ratio	29.40	23.30	0.53
+25°C/+125°C Ratio Tolerance	±10%	±10%	±10%

Table VI. Resistance Multipliers .

Temp (°C)	R-T Curve B	R-T Curve M	R-T Curve E
-55	96.400	60.780	0.500
-40	33.660	23.980	0.580
-30	17.700	13.520	-
-20	9.712	7.891	-
-15	7.298	6.102	0.710
-10	5.534	4.754	-
0	3.266	2.949	0.810
15	1.571	1.513	-
25	1.000	1.000	1.000
30	0.8058	0.8194	-
40	0.5326	0.5592	1.100
50	0.3602	0.3893	1.210
60	0.2488	0.2760	-
70	0.1751	0.1990	1.350
75	0.1480	0.1700	1.440
80	0.1256	0.1458	-
90	0.0916	0.1084	-
100	0.0679	0.0817	1.660
110	0.0511	0.0624	-
120	0.0389	0.0482	-
125	0.0340	0.0430	1.900