MSFC-STD-355C
MAY 15, 1975
SUPERSEDING
MSFC-STD-355B
APRIL 26, 1971

5-22-75

GEORGE C. MARSHALL SPACE FLIGHT CENTER

NATIONAL AERONAUTICS AND SPACE ADMINISTRATION

STANDARD

RADIOGRAPHIC INSPECTION OF ELECTRONIC PARTS

George C. Marshall Space Flight Center
National Aeronautics and Space Administration

Standard

Radiographic Inspection of Electronic Parts

1.0 This standard has been approved by the George C. Marshall Space Flight Center (MSFC) and is approved for use by MSFC and associated contractors, effective May 15, 1975.

2.0 All recommended changes shall be submitted to the Systems Engineering Division, Systems Analysis and Integration Laboratory (EL52) George C. Marshall Space Flight Center, Ala. 35812 for coordination with the cognizant design activity.

CONTENTS

GEORGE C. MARSHALL SPACE FLIGHT CENTER
NATIONAL AERONAUTICS AND SPACE ADMINISTRATION
STANDARD

RADIOGRAPHIC INSPECTION OF ELECTRONIC PARTS

1. SCOPE

1.1 This standard establishes the inspection criteria, test conditions and methods for radiographic inspection of electronics and electrical parts for verification of physical attributes.

2. REFERENCED DOCUMENTS

2.1 The following documents form a part of this standard to the extent specified herein. Unless otherwise indicated, the issue in effect on date of invitation for bids or request for proposals shall apply.

STANDARDS

Federal

FED-STD-595	Colors

Military

MIL-STD-453	Inspection, Radiographic

(Copies of specifications, standards, drawings, bulletins, and publications required by suppliers in connection with specific procurement functions should be obtained from the procuring activity or as directed by the contracting officer.)

3. DEFINITIONS

3.1 There are no applicable definitions.

4. GENERAL REQUIREMENTS

4.1 Inspection - Radiographic inspection shall be performed by a laboratory qualified in accordance with 6.0 and listed on or approved for listing on the applicable Approval Testing Laboratories (ATL) listing. Radiographic inspection shall be in accordance with MIL-STD-453 and this standard including applicable appendices. Where the requirements stated in this standard conflict with any requirement of MIL-STD-453, the requirements of this standard shall apply.

Note - The dimensional values upon which this standard is based were developed using the U.S. System. The metric equivalents were obtained by direct conversion based upon 1 inch = 25.4 mm. Where such equivalents do not correspond to a standard metric size, the closest standardized metric equivalent size may be used.

4.2 Equipment

4.2.1 Radiography - The X-ray equipment shall have sufficient voltage range to produce radiographs in accordance with this standard. The equipment shall have a focal spot of 3.5 millimeters (mm) or less and shall maintain a sharply defined image at a focal film distance of (76.20 to 152.40 centimeters) 30 to 60 inches.

4.2.2 Exposure factors - The X-ray exposure factors shall be selected to achieve maximum image detail within the sensitivity requirements. The film shall be exposed in accordance with the following requirements:

(a) X-ray voltage - lowest voltage possible.

(b) H and D film density - 1.0 to 2.5

(c) Milliampere and time settings - adjusted, as necessary, to obtain satisfactory exposure.

4.2.3 Film - The X-ray film shall be single emulsion and of a grade defined as very fine grain.

4.2.3.1 Sensitivity - X-ray film and equipment shall be capable of detecting all metallic particles with a major dimension of (0.025 millimeter) 0.001 inch or greater.

4.2.3.2 Exposure - Exposure factors such as KVP, current, and time shall be compatible with the sensitivity requirements of 4.2.3.1.

4.2.3.3 Film density - The X-ray equipment and processing techniques shall be capable of producing H and D film density of 1.0 to 2.5 in accordance with the American Standard Printing density type P-2.

4.2.3.4 Film dimensions - Radiographic film shall not exceed (35.56 centimeters) 14 inches in width and (43.18 centimeters) 17 inches in length.

4.2.3.5 Processing - The exposed X-ray film shall be processed in such manner that the film shall be free of processing defects, i.e., fingerprints, chemical spots, blemishes, etc.

4.2.3.6 Film identification - Each radiographic film shall be identified with the following information:

(a) Part manufacturer's name.

(b) MSFC Part Number (as marked on part).

(c) Part Serial numbers or cross reference.

(d) Date or lot code (as marked on part).

(e) View number

(f) X-ray laboratory name

(g) Penetrameter image.

(h) Penetrameter number (see Table I).

4.2.4 Penetrameters - Penetrameters shall be employed in all radiographic testing and shall be: (a) as specified in Figure I and in Table I; (b) a No. 1 ASTM-B Image Quality Indicator (IQI); or (c) an equivalent as approved by the procuring agency. The penetrameter image shall be used to determine radiographic quality and shall meet the following requirements:

(a) Penetrameter wires shall be visible on each radiograph.

(b) Penetrameters shall be selected to give a film density within +10 percent of the density of the area of immediate interest.

(c) Penetrameters shall be placed in diagonal corners on the source side of the film. The plane of the penetrameters shall be normal to the radiation beam. When 35-mm film strip is used, the penetrameter shall be placed in a position normally occupied by a part, and a penetrameter image shall be made (exposed) for every 50 parts or (43.18 centimeters) 17 inches of film, whichever is more convenient.

(d) Distortion of any penetrameter shall not exceed 10 percent.

(e) The spacing between wires of a penetrameter shall not be distorted by more than 10 percent. The percentage of distortion as used in this standard is defined as follows:

$$\text{Percentage distortion} = \frac{S_0 - S_1}{S_0} \times 100 \qquad \text{where}$$

S_0 = actual wire spacing, and

S_1 = wire spacing as it appears on the x-ray film

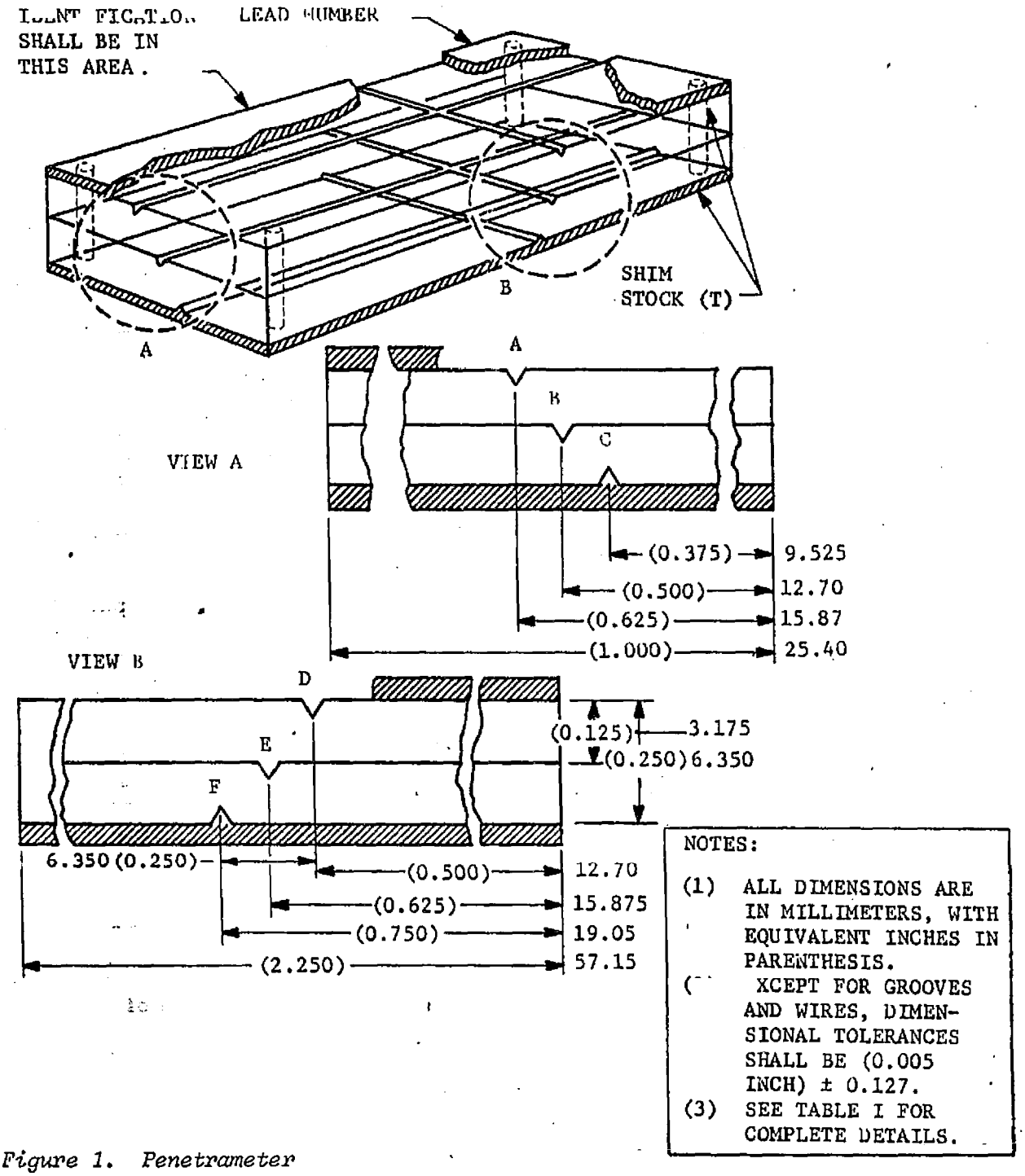

Figure 1. Penetrameter

Table I. Types of penetrameters

Pene. number	Shim stock thickness-T in millimeters (inches)	Wire size in millimeters (inches)					
		A	B	C	D	E	F
00	None	0.0508 (0.002)	0.0254 (0.001)	0.0127 (0.0005)	0.0127 (0.0005)	0.0254 (0.001)	0.0508 (0.002)
0	0.0508 (0.002)	0.0508 (0.002)	0.0254 (0.001)	0.0127 (0.0005)	0.0127 (0.0005)	0.0254 (0.001)	0.0508 (0.002)
1	0.127 (0.005)	0.0508 (0.002)	0.0254 (0.001)	0.0127 (0.0005)	0.0127 (0.0005)	0.0254 (0.001)	0.0508 (0.002)
2	0.1778 (0.007)	0.0508 (0.002)	0.0254 (0.001)	0.0127 (0.0005)	0.0127 (0.0005)	0.0254 (0.001)	0.0508 (0.002)
3	0.254 (0.010)	0.0762 (0.003)	0.0508 (0.002)	0.0254 (0.001)	0.0254 (0.001)	0.0508 (0.002)	0.0762 (0.003)
4	0.381 (0.015)	0.0762 (0.003)	0.0508 (0.002)	0.0254 (0.001)	0.0254 (0.001)	0.0508 (0.002)	0.0762 (0.003)
5	0.635 (0.025)	0.127 (0.005)	0.0762 (0.003)	0.0508 (0.002)	0.0508 (0.002)	0.0762 (0.003)	0.127 (0.005)
6	0.889 (0.035)	0.127 (0.005)	0.0762 (0.003)	0.0508 (0.002)	0.0508 (0.002)	0.0762 (0.003)	0.127 (0.005)

NOTES

1. Shim stock shall be made from steel.
2. Wires shall be made from tungsten, except for penetrameters used with relays, in which case either tungsten or copper wire may be utilized.
3. Grooves shall be approximately 0.127 mm (0.005 inch).
4. Center sections shall be made from clear plastic of low X-ray density.
5. All materials shall be bonded with clear-type cement.
6. Plastic cement should have a low X-ray density.
7. Tolerances, except for grooves and wires, shall be ±0.127 mm (0.005 inch).
8. In addition to bonding the penetrameter sections, assemblies may be fastened within 6.35 mm (0.250 inch) of each corner with bottom face flush.
9. Fastener shall not interfere with the end use of the penetrameter.

4.2.4.1 Metric equivalent penetrameters shall be appropriately identified and the metric equivalent sizes used in their construction shall be tabulated.

Note - Correlation of the penetrameters listed in Table I and the ASTM-B Image Quality Indicator is as follows:

MSFC-STD-355	00	0	1	2	3	4	5	6
ASTM IQI	1	2	3	4	5	6	7	8

Numbers 00 and 0 are additions in this revision and were so numbered to maintain continuity with previous revisions.

4.2.5 Fixtures - Suitable fixtures shall be used for mounting the electronic parts during the X-ray operation.

4.2.5.1 Mounting of parts - Electronic parts shall be positioned and mounted in a manner that will permit compliance with 4.5.4 and the applicable appendices. See Figures 2, 3, and 4 for typical layout. The parts must be mounted in any type of fixture, provided that the fixture is not between the body of the electronic part and the film.

4.3 Identification of parts - Each electronic part shall be permanently and legibly marked with a serial number that will provide traceability from each part to its respective X-ray. The parts shall be radiographed in consecutive, increasing serial order. When a part is missing, the blank space shall contain either the serial number or other X-ray opaque objects to readily identify and correlate X-ray data.

Parts shall be identified on the radiographic film (see 4.2.3.6) by the actual part serial number or by a number which is cross-referenced to the part serial number. When cross-reference numbers are used, a cross reference listing shall accompany the radiograph.

4.2.6 Radiation filters - Metallic screens and filters, as follows, shall be used to give better definition and sensitivity:

(a) Lead backing plates, (3.175 millimeters) 0.125 inch thick shall be used on the table surface or in back of the parts during all examinations.

(b) Lead diaphragms shall be used to isolate specimens from each other when more than four (4) specimens are radiographed on the same film.

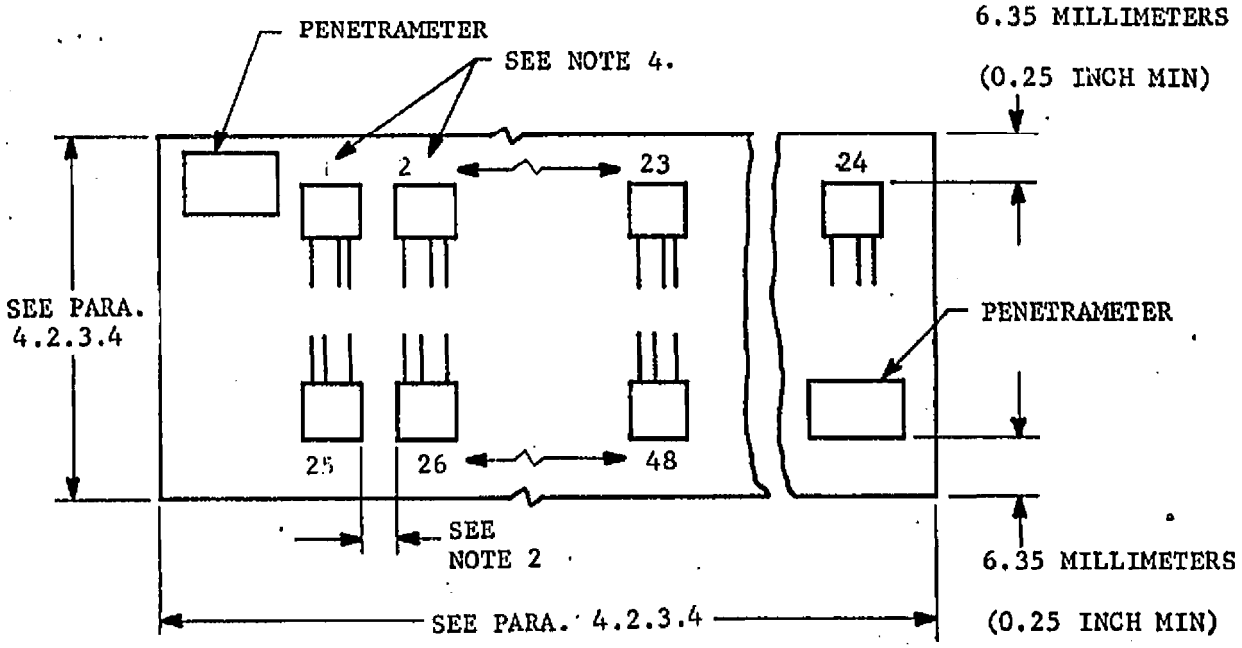

NOTES:

1. SEQUENTIAL NUMBERING SHALL BE USED AND SHALL START WITH THE UPPER LEFT UNIT ACROSS TO THE UPPER RIGHT UNIT, THEN THE SECOND ROW LEFT TO RIGHT, ETC.

2. TYPICAL CLEARANCE BETWEEN ANY UNIT IN A ROW SHALL BE 6.35 MILLIMETERS (0.25 INCH). MINIMUM PART SPACING ON X-RAY FILM SHALL BE SUCH THAT X-RAY SCATTER FROM ONE PART SHALL NOT FOG OR OBSCURE THE X-RAY IMAGE OF ADJACENT PARTS.

3. THE NUMBER OF ROWS ALLOWABLE SHALL NOT BE RESTRICTED BUT SHALL BE DETERMINED BY THE SIZE OF THE DEVICE.

4. THE NUMBER SHOWN SHALL BE THE DEVICE'S ACTUAL SERIAL NUMBER OR OTHER NUMBER WHICH SHALL BE CROSS-REFERENCED TO THE DEVICE'S SERIAL NUMBER.

Figure 2. Typical layout for transistors, relays, and integrated circuits mounted in transistor headers

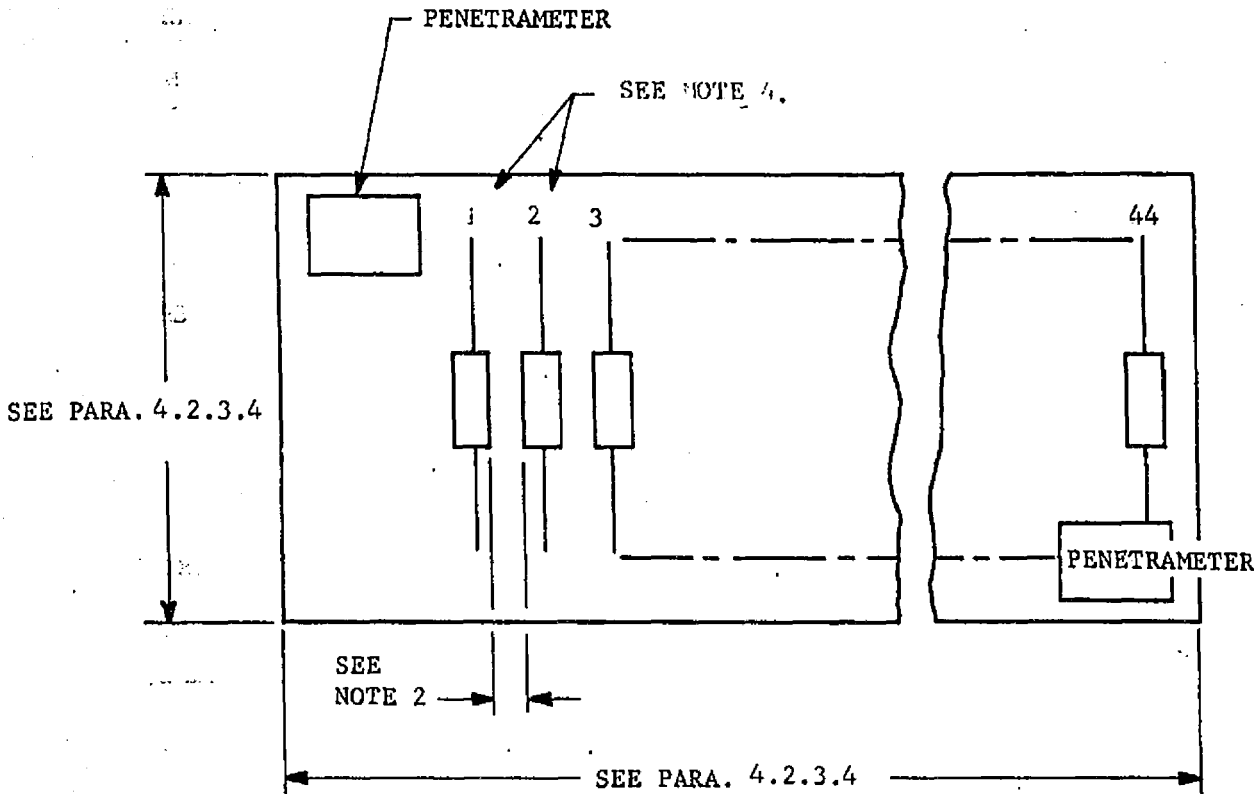

NOTES:

1. SEQUENTIAL NUMBERING SHALL BE USED AND SHALL START WITH THE UPPER LEFT UNIT ACROSS TO THE UPPER RIGHT UNIT, THEN THE SECOND ROW LEFT TO RIGHT, ETC.

2. TYPICAL CLEARANCE BETWEEN ANY UNIT IN A ROW SHALL BE 6.35 MILLIMETERS (0.25 INCH). MINIMUM PART SPACING ON X-RAY FILM SHALL BE SUCH THAT X-RAY SCATTER FROM ONE PART SHALL NOT FOG OR OBSCURE THE X-RAY IMAGE OF ADJACENT PARTS.

3. THE NUMBER OF ROWS ALLOWABLE SHALL NOT BE RESTRICTED BUT SHALL BE DETERMINED BY THE SIZE OF THE DEVICE.

4. THE NUMBER SHOWN SHALL BE THE DEVICE'S ACTUAL SERIAL NUMBER OR OTHER NUMBER WHICH SHALL BE CROSS-REFERENCED TO THE DEVICE'S SERIAL NUMBER.

Figure 3. Typical layout for axial lead parts

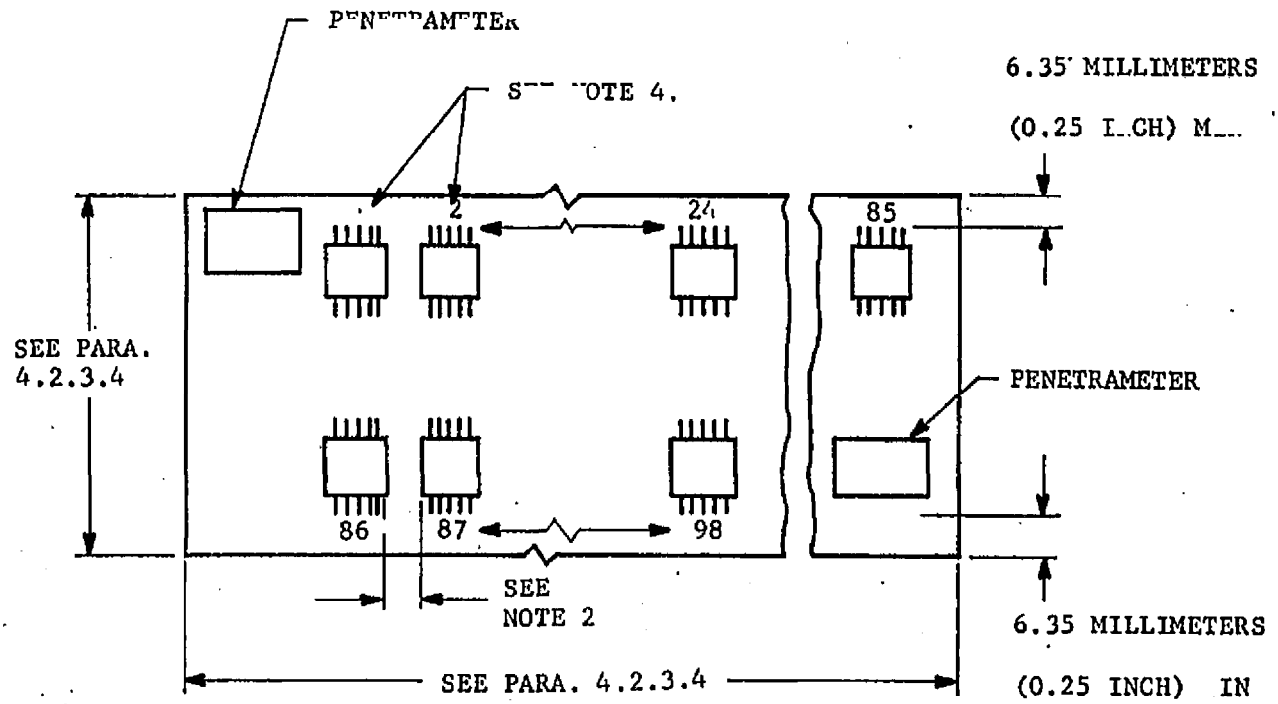

NOTES:

1. SEQUENTIAL NUMBERING SHALL BE USED AND SHALL START WITH THE UPPER LEFT UNIT ACROSS TO THE UPPER RIGHT UNIT, THEN THE SECOND ROW LEFT TO RIGHT, ETC.

2. TYPICAL CLEARANCE BETWEEN UNITS IN A ROW SHALL BE 6.35 MILLIMETERS (0.25 INCH). MINIMUM PART SPACING ON X-RAY FILM SHALL BE SUCH THAT X-RAY SCATTER FROM ONE PART SHALL NOT FOG OR OBSCURE THE X-RAY IMAGE OF ADJACENT PARTS.

3. THE NUMBER OF ROWS ALLOWABLE SHALL NOT BE RESTRICTED BUT SHALL BE DETERMINED BY THE SIZE OF THE DEVICE.

4. THE NUMBER SHOWN SHALL BE THE DEVICE'S ACTUAL SERIAL NUMBER OR OTHER NUMBER WHICH SHALL BE CROSS-REFERENCED TO THE DEVICE'S SERIAL NUMBER.

Figure 4. Typical layout for integrated circuits mounted in flat packs

(c) Barium clay masking may be used provided the barium clay is of sufficient thickness to insure that the film density under the clay is approximately one-half that under the specimen.

(d) Where practicality permits, metallic shot may be used for masking large singular specimens.

(e) Lead-foil screens may be used provided commercially-pure lead or a 94.6 percent lead-antimony compound is used as base material.

(f) Liquid absorbers shall not be used.

4.3 Inspection and examination of radiographs - Inspection of radiographs shall be conducted by the device manufacturer or testing activity. Each radiograph shall be examined, utilizing the equipment specified herein. The radiographs shall be inspected to determine that each electronic part conforms to the requirements of this document and the applicable appendix.

4.3.1 Viewing equipment - The radiograph shall be examined on a suitable illuminator with variable intensity, or on a viewer suitable for radiographic inspection on projection type viewing equipment.

4.3.2 Magnification - A magnification of between 7 power and 20 power shall be used for radiograph examination.

4.4 Marking of parts - Electronic parts that have been X-rayed and have been found acceptable shall be identified with a blue dot on the external case. The blue dot shall be approximately 1.5 mm (0.0625 inch) in diameter and shall be of fungus-resistant paint. The paint color shall be any shade ranging between numbers 15102-15123 and 25102-25109 as specified in FED-STD-595.

4.5 Reports and records

4.5.1 Reports of inspection - Unless otherwise specified by the contract, the testing activity shall furnish inspection reports signed by an authorized representative of the testing activity. The reports shall give the results of the radiographic inspection and shall list the purchase order number or equivalent identification, the part number, the number of parts inspected, the number of parts rejected, and the date of the test. For each rejected part, the part number, the serial number, and the cause for rejection of the part shall be listed. Two copies of the report shall be forwarded to the procuring activity.

4.5.2 Records of inspection - A complete record of the details of inspection shall be kept by the manufacturer or testing laboratory on a form acceptable to MSFC. The record shall list the voltage potentials and currents used in the radiographic process, the time of exposure, the

distance of the source of radiation from the surface of the part, the distance of the film from the same surface, the approximate angle between the central beam of radiation and the film, the screens and filters used, the size of the focal spot, the time of development of the film, and the serial number of the part under test. When an identical technique is used for a number of parts, a single record, tabulating all identical features will suffice for all parts. Copies of the records shall be made available to MSFC and the procuring activity when requested.

4.5.3 Records of radiographs - Each radiograph shall carry a radiograph inspection serial number or code letters to identify the radiograph with the parts examined shown in the radiograph. One copy of all radiographs shall accompany the shipment of parts when submitted to the procuring activity. In addition, one complete set of radiographs shall be kept by the manufacturer or testing laboratory for a period of 24 months.

4.6 Personnel

4.6.1 Radiographer - Personnel engaged in radiographic processing shall be familiar with the requirements of this standard and with all other documentation controlling radiographic inspection of parts and materials. They shall be capable of producing radiographs which meet the requirements of all applicable documentation.

4.6.2 Radiographic interpreters - Personnel engaged in the interpretation of radiographs shall be familiar with the requirements of this standard and with all applicable documentation controlling radiographic quality of parts and materials being inspected. They shall be capable of evaluating radiographs to determine conformance of parts and materials to the requirements of all applicable documentation.

4.6.3 Vision - The minimum vision requirements for visual acuity of personnel inspecting film shall be as follows:

(a) Distant vision shall equal 20/30 in at least one eye, either corrected or uncorrected.

(b) Near vision shall be such that the individual can read Jaeger type No. 2 at a distance of 40.64 centimeters (16 inches), either corrected or uncorrected.

4.6.4 Vision tests - Vision tests shall be performed by an oculist, optometrist, or by other professionally recognized personnel. One year from the effective due date of qualification, and each year thereafter, qualified personnel shall be required to pass the vision tests specified herein.

5. DETAILED REQUIREMENTS

5.1 Acceptance criteria - Each electronic part furnished under the provisions of this standard shall be radiographically inspected for the verification of physical attributes. Acceptance of the parts shall be based on the criteria established in this document and the applicable appendices.

5.1.1 Radiographs - One copy of the radiographs shall accompany the parts when submitted to the procuring activity for acceptance.

5.1.2 Abnormality of construction - Acceptable X-ray lots shall be of homogeneous construction regarding the characteristics discernible through radiographic examination. Parts deviating from the standard construction of the lot shall be rejected.

5.2 Reradiographing - When there is doubt as to the interpretation or the clarity of a radiograph, reradiographing shall be performed when directed to do so by the MSFC representative.

5.3 Interpretation - All requests for clarification and interpretations concerning the criteria specified herein shall be directed to MSFC. (see 6.1.3).

6.0 QUALIFICATION

6.1 Qualification procedure - The radiographic laboratory shall submit a written request for qualification to the NASA center or organization imposing this standard. The request shall include sample X-ray film of components comparable to the items specified in the contract or order, X-ray procedures, and a description of X-ray equipment. Upon approval, the requesting laboratory shall be assigned a qualification identification number. No formal qualification survey shall be required, however, the requesting laboratory shall be subject to survey at any time, on 24 hours notice, by an authorized representative of the Government to determine compliance with the requirements of this standard. The qualification survey shall be conducted within the guidelines given in 6.2.

6.1.1 Qualification samples - Radiographs of 50 devices, prepared in accordance with this standard, shall be submitted to the qualifying activity (see 6.1.3) with the procedures specified in 6.1. The 50 devices to be X-rayed may consist of any of the devices covered in the appendices to this standard except where qualification to X-ray relays is desired, in which case radiographs of hermetically sealed relays are required.

6.1.2 Subcontractor laboratory qualification - The prime contractors shall be responsible for the continuing qualification status of radiographic laboratories, including the status of all tier subcontractors. The qualification of any tier subcontractor radiographic laboratory shall be subject to review by a representative of the Government.

6.1.3 Qualifying activity - The qualifying activity for this standard is the George C. Marshall Space Flight Center. All information pertaining to qualification required by this standard shall be submitted to the following address:

National Aeronautics and Space Administration
George C. Marshall Space Flight Center
Marshall Space Flight Center, Alabama 35812
Realibility and Quality Assurance Office
Mail Code EG 24

6.2 Qualification survey - The radiographic laboratory qualification survey shall be conducted within the following guidelines:

6.2.1 Documentation - On-hand documentation shall be surveyed to determine adequate radiographic procedures and quality levels. Survey shall include applicable drawings, specifications, and standards.

6.2.1.1 Procedures - Compatibility of laboratory standard operating procedures with MSFC requirements, as defined in applicable documents, shall be established.

6.2.2 Performance - Adequacy of laboratory performance shall be determined by the following inspections:

(a) Inspection of test parts which correspond to the MSFC associated activities of the laboratory. These parts shall be accompanied by documentation defining the desired radiographic coverage, procedures, and quality levels.

(b) Review of radiographic films of test parts for adequacy of film processing, coverage, density, and sensitivity.

(c) Review of laboratory analysis of part quality and part disposition.

6.2.3 Reports and records - The laboratory's procedure for making reports, keeping records, and storing films shall be inspected for adequacy.

APPENDIX A
TRANSISTORS

10. SCOPE

10.1 This appendix establishes the criteria for acceptance and rejection of transistors supplied under the provision of this standard.

20. REQUIREMENTS

20.1 Views

20.1.1 Round can type - One view shall be taken with X-rays penetrating the case normal to a plane passing through the emitter and collector leads, with the X-rays coming from the side opposite the base lead. Using the base lead as an axis, rotate the transistor 90 degrees and take a second view. A third view shall be taken along the Y-axis when the pallet area is not obscured by a mounting assembly or terminal lug (the Y-axis is the cylindrical axis).

20.1.2 Metal box type - Two views shall be taken with X-rays with the part as aligned in Figure A-1.

20.1.3 Stud type - One view shall be taken with X-rays penetrating the case normal to a plane passing through the emitter and base leads. Using the terminal lug as an axis, the transistor shall be rotated 90 degrees and a second view taken. A third view shall be taken with the plane of the emitter and base leads intercepting the plane of the film at a $45 \pm 5^{\circ}$ angle.

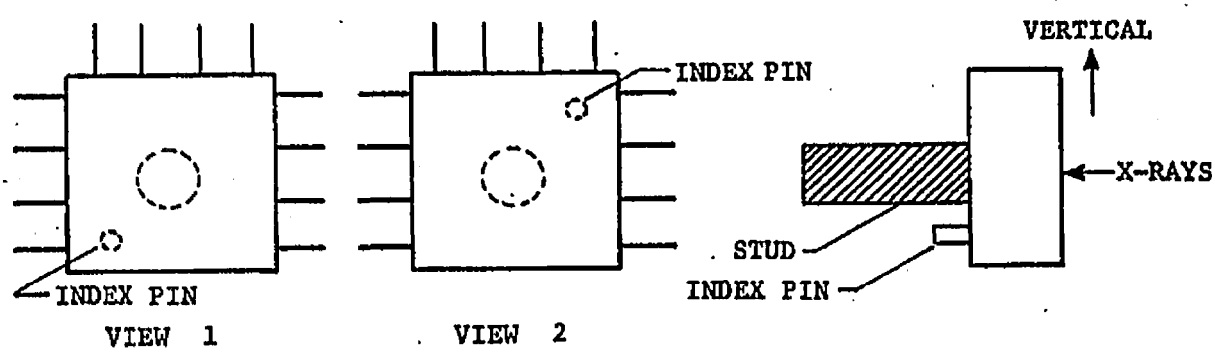

(A) METAL BOX PACKAGE

Figure A-1

20.2 Examination - The transistor examination shall include, but not be limited to, inspection for foreign particles, solder splash, proper bond of lead to semiconductor element and lead to terminal post, accuracy of semiconductor element and geometry, and proper semiconductor element mounting.

20.2.1 Internal post - The internal post shall not be bent more than 10 degrees from the vertical and shall be uniform in length and construction.

20.2.2 Lead wires - There shall be no sharp bends, kinks, or loops in the lead wires. Any bend exceeding 3 wire diameters deviation from a smooth arc shall be considered a sharp bend. Lead wires shall not be pulled tight unless specifically designed in this manner, such as transistors using clips or rigid interconnection leads, but shall be smoothly bowed. The bow of the lead wire, from a straight line as drawn from the pad bond to the post bond shall be as follows: 7 to 10 wire diameters for lead wire up to 0.127 mm (0.005 in.) in diameter and 3 to 5 wire diameters for 0.127mm (0.005 in.) to 0.254 mm (0.010 in.) wire. See Figure A-3(b). Any bends or curves in the lead wire shall not extend beyond the top of the post more than three times the diameter of the lead wire. Lead wires shall not be misaligned such that they cross one another. The lead wire pigtail shall not extend beyon the post by a distance greater than one half the diameter of the post. See Figures A-2, A-3, A-4, A-5 and A-6.

20.2.3 Extra wires - There shall be no wires present other than those connecting specific areas of the transistor semiconductor element to the external leads, except where the design of the transistor calls for the use of such additional wires.

20.2.4 Semiconductor element mounting - The semiconductor element shall be mounted and bonded so that it is not tilted more than 10 degrees from the normal mounting surface. Where the bonding agent accumulates around the perimeter of the semiconductor element and touches the side of the semiconductor element, it shall not accumulate to a thickness greater than the thickness of the semiconductor elements. Where bonding agent is built up but is not touching the semiconductor element, the build-up shall not be greater than twice the thickness of the semiconductor element nor have a pedestal form. See Figure A-7.

20.2.5 Extraneous material - There shall be no visible extraneous material or foreign objects 0.0254 mm (0.001 in.) or larger in the major dimension; loose bonding (eutectic) material will be considered extraneous material. See Figure A-8(b). Excessive (but not loose) bonding material will not be considered extraneous unless it fails to meet the requirements of 20.2.4 (See Figure A-7).

20.2.6 Clearance - Acceptable transistors shall exhibit adequate internal clearances. The minimum distance between electrical connections on the post (or the post proper) and the nearest point on the case or header, as well as the minimum distance between the lead wire and the case or header, shall be equal to the diameter of the element post proper (except for the short distance between lead and header in the vicinity of the bond of the lead to the semiconductor element). When a low profile case (such as a TO-46) is a specific design requirement, clearance shall be 20 percent of the total inside dimension between the base and top of the case. In transistors that have the semiconductor element mount vertical, the minimum clearance shall be 0.0508 mm (0.002 in.) between the semiconductor element mount and header, and between the semiconductor element mount and case (see Figure A-9).

20.2.7 Weld splash - There shall be no indication of weld splatter in the form of balls or strips on the inside of the device. Weld expulsion, when continuous and uniform, is acceptable when located on the weld ring side of the header (see Figure A-10).

20.2.8 Excess material - There shall be no excess eutectic material on the semiconductor element, on the case, on the lead weld, nor separated from the original bond line (see Figure A-11).

20.2.9 Quad transistors, metal box package - In addition to the examination criteria listed above, quad transistors shall also be examined for the following criteria.

20.2.9.1 Extraneous material - There shall be no detectable loose particles 0.0254 millimeter (0.001 in.) or larger in the major dimension. A loose particle shall be defined as one which changes location when the package is rotated 180° as shown in Figure A-12(a).

20.2.9.2 Substrate attach voids - Contact area voids under the substrate (carrier) in excess of 20% of the total contact area are unacceptable.

20.2.9.3 Internal clearances - Clearance between internal ends of feedthru pins of less than one pin diameter is unacceptable. See Figure A-12(b).

20.2.9.4 Bent pins - Feedthru pins deviating more than 10° from a straight line are unacceptable. See Figure A-12(c).

ACCEPTABLE

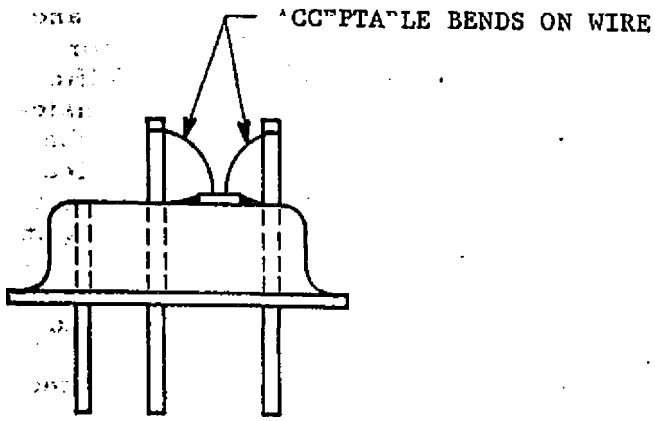

UNACCEPTABLE

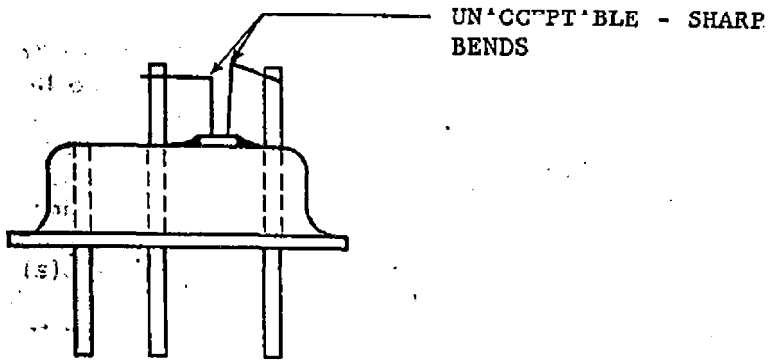

Figure A-2. Acceptable and unacceptable bends on internal leads

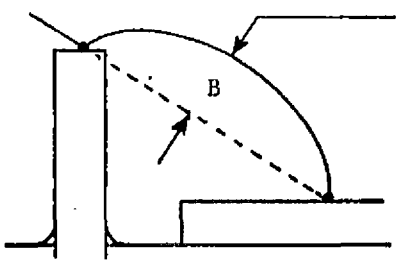

(b) ACCEPTABLE IF B = 3 TO 5 DIAMETERS FOR 0.127 MM (.005 IN.) TO 0.254 MM (.010 IN.) WIRE OF B = 7 TO 10 DIAMETERS FOR WIRE LESS THAN 0.127 MM (.005 IN.) IN DIAMETER.

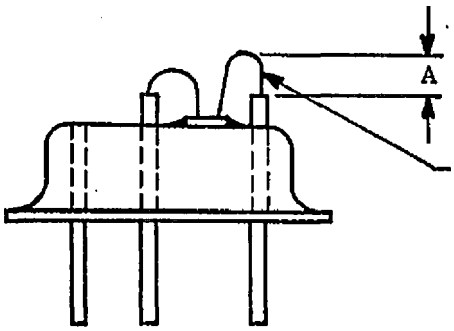

(a) UNACCEPTABLE IF DISTANCE A EXCEEDS 3 TIMES DIAMETER OF WIR I G P SEMICONDUCTOR ELEMENT

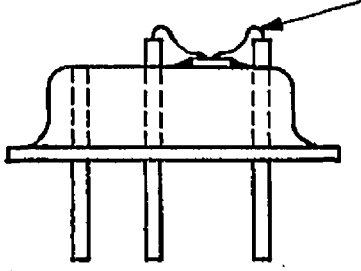

UNACCEPTABLE - WIRES SAG TOO MUCH AND TOO CLOSE TO SEMI-CONDUCTOR ELEMENT

Figure A-3. Acceptable and unacceptable bent or sagging internal leads

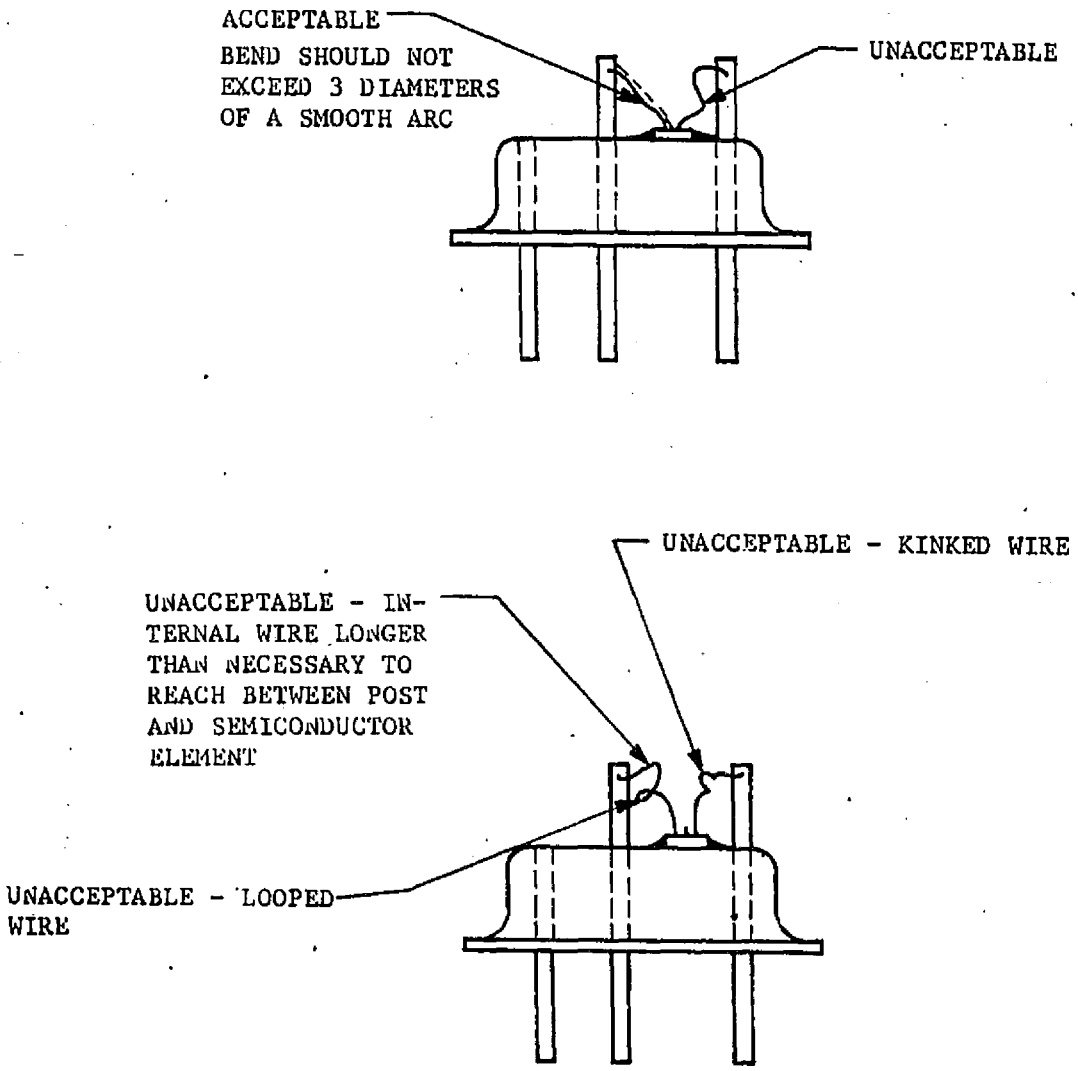

Figure A-4. Other types of acceptable and unacceptable internal leads

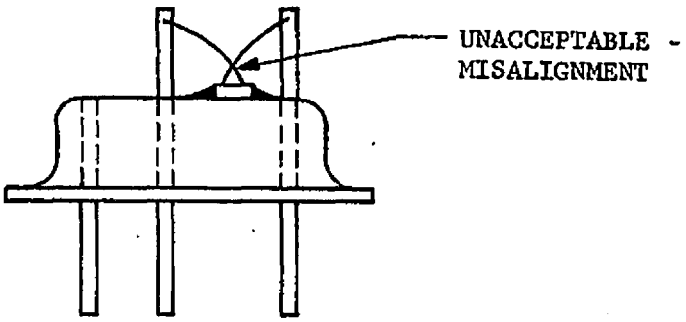

Figure A-5. Misaligned internal leads

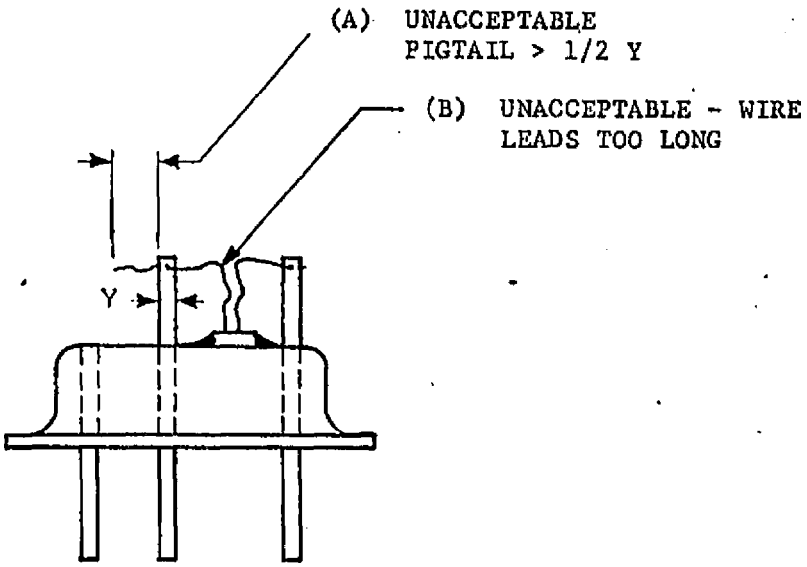

Figure A-6. Internal leads too long

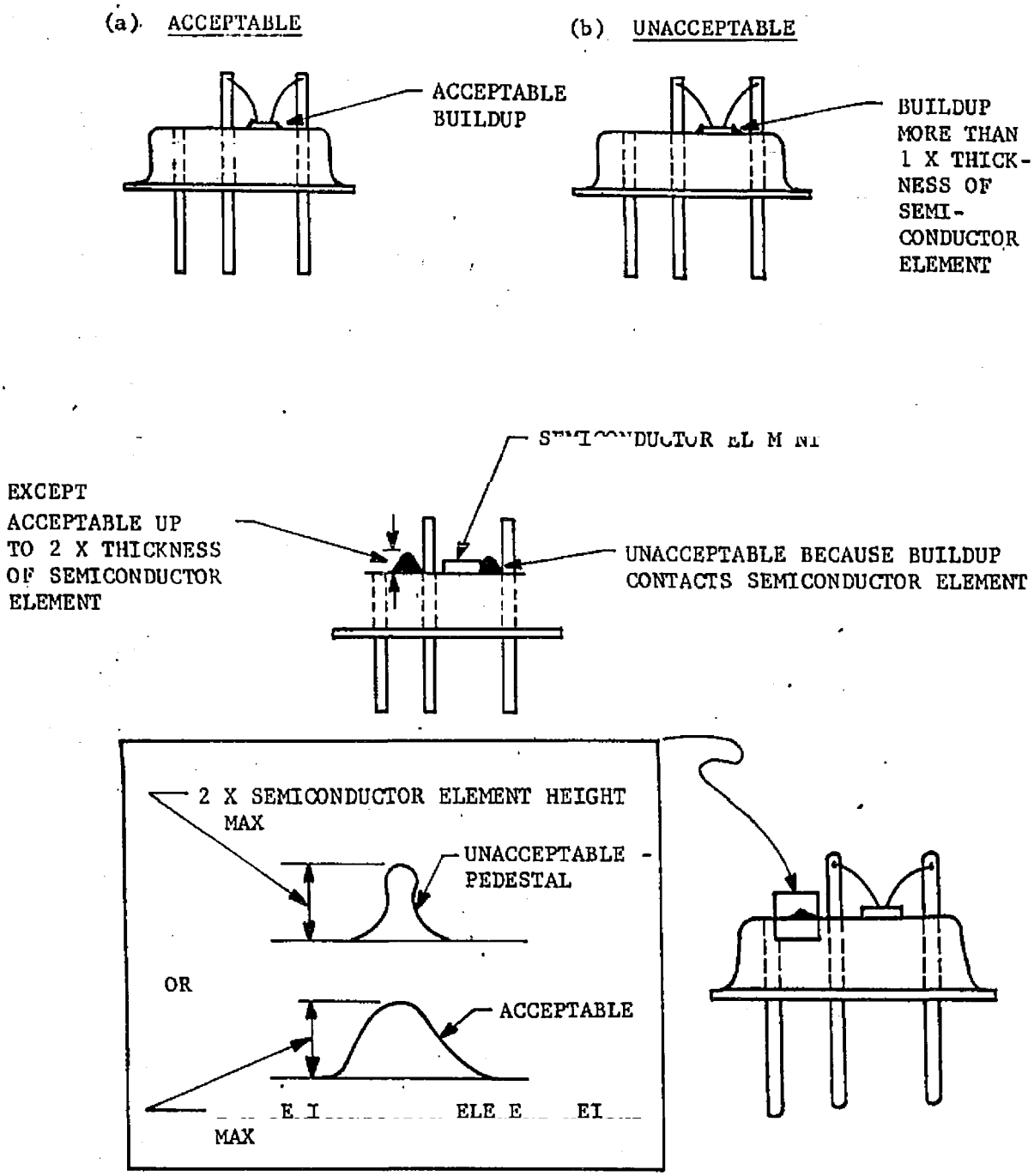

Figure A-7. Acceptable and unacceptable bonding material buildup

(a) ACCEPTABLE

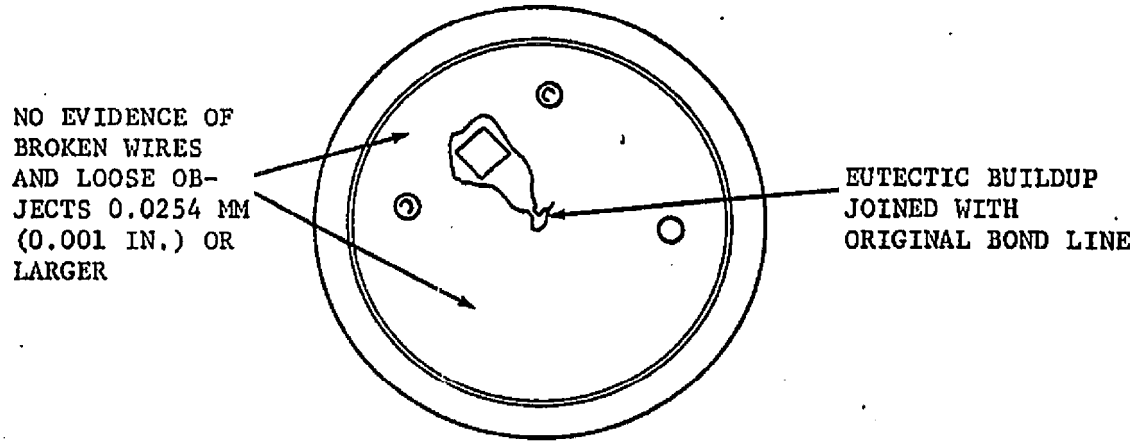

(b) UNACCEPTABLE

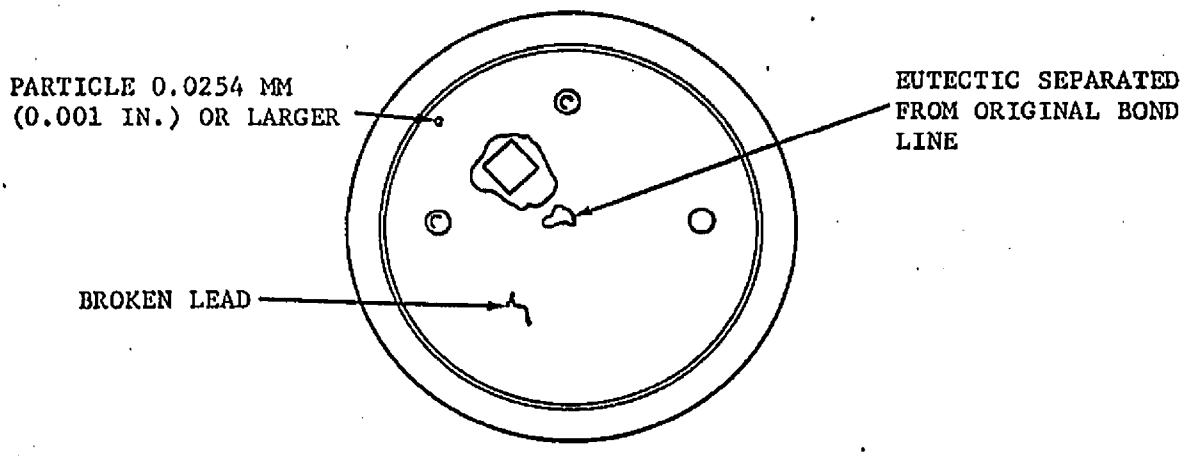

Figure A-8. Acceptable and unacceptable foreign objects

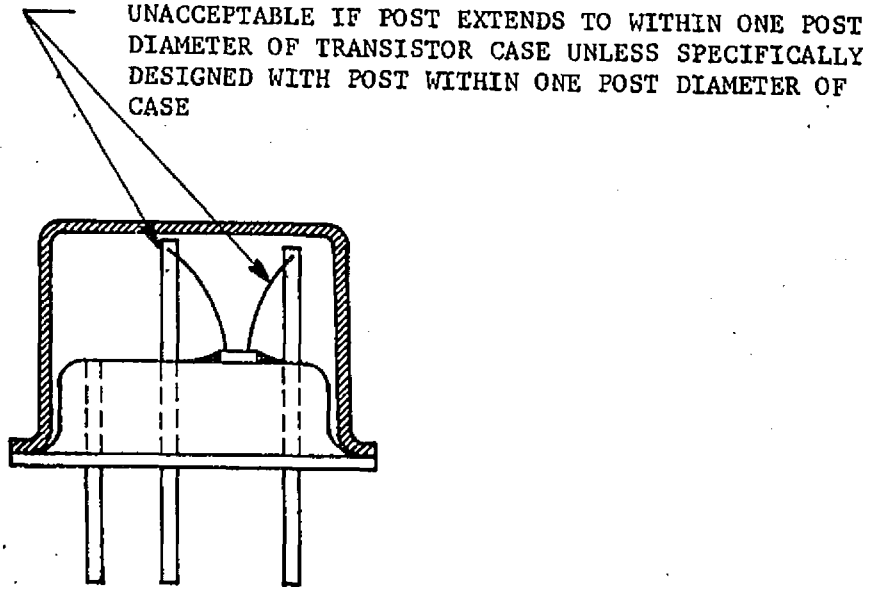

Figure A-9. Unacceptable internal clearance.

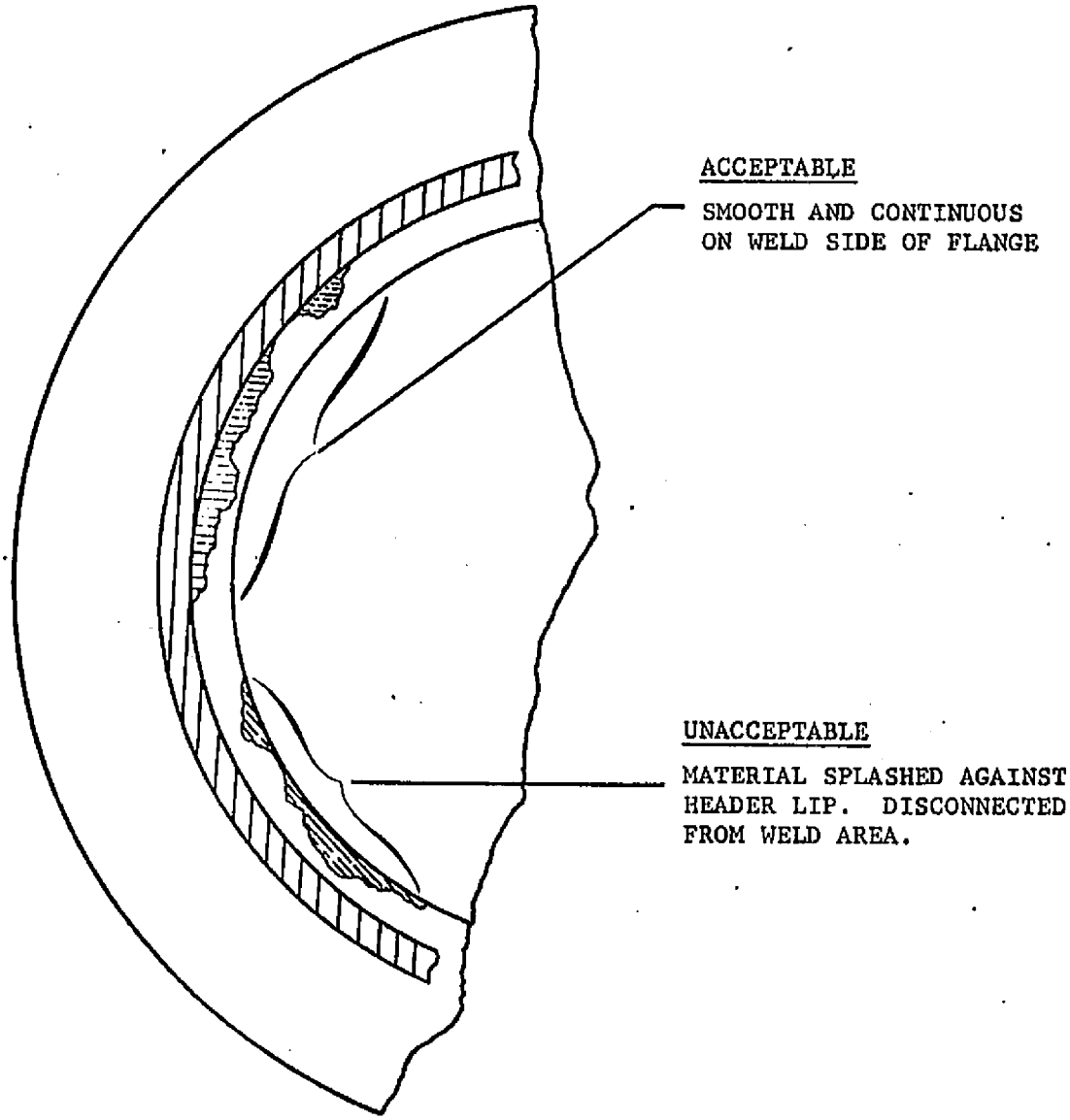

Figure A-10. Acceptable and unacceptable weld splash

ACCEPTABLE

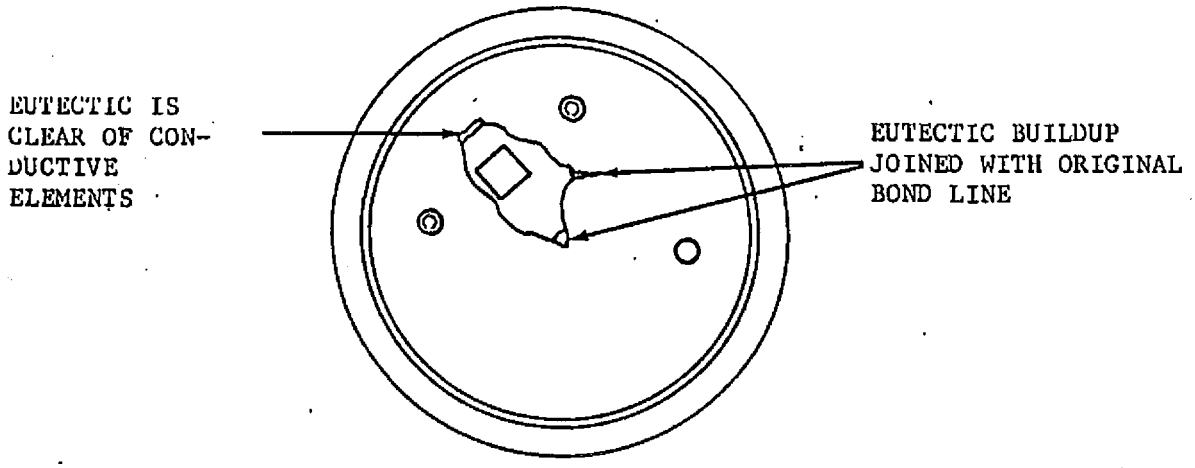

UNACCEPTABLE

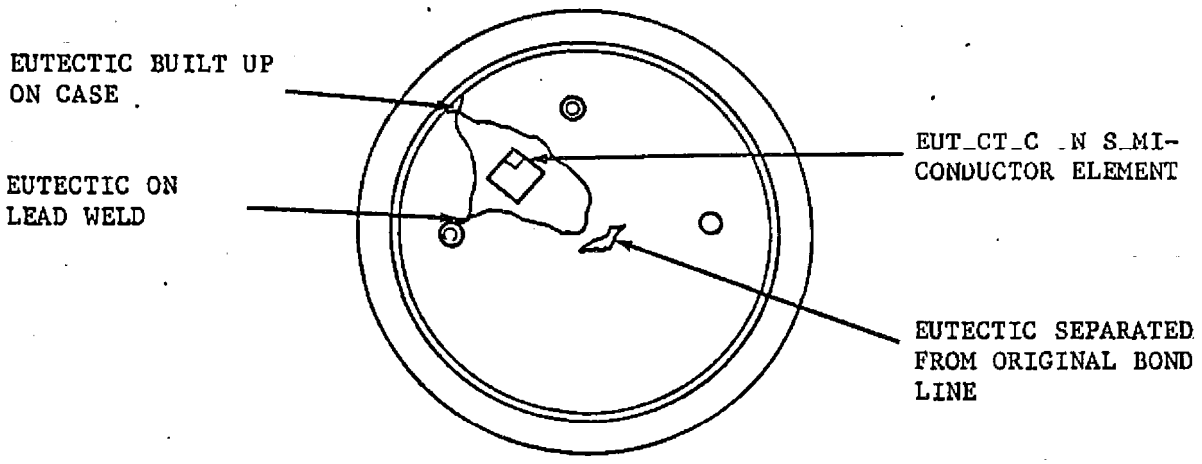

Figure A-11. Acceptable and unacceptable excess material

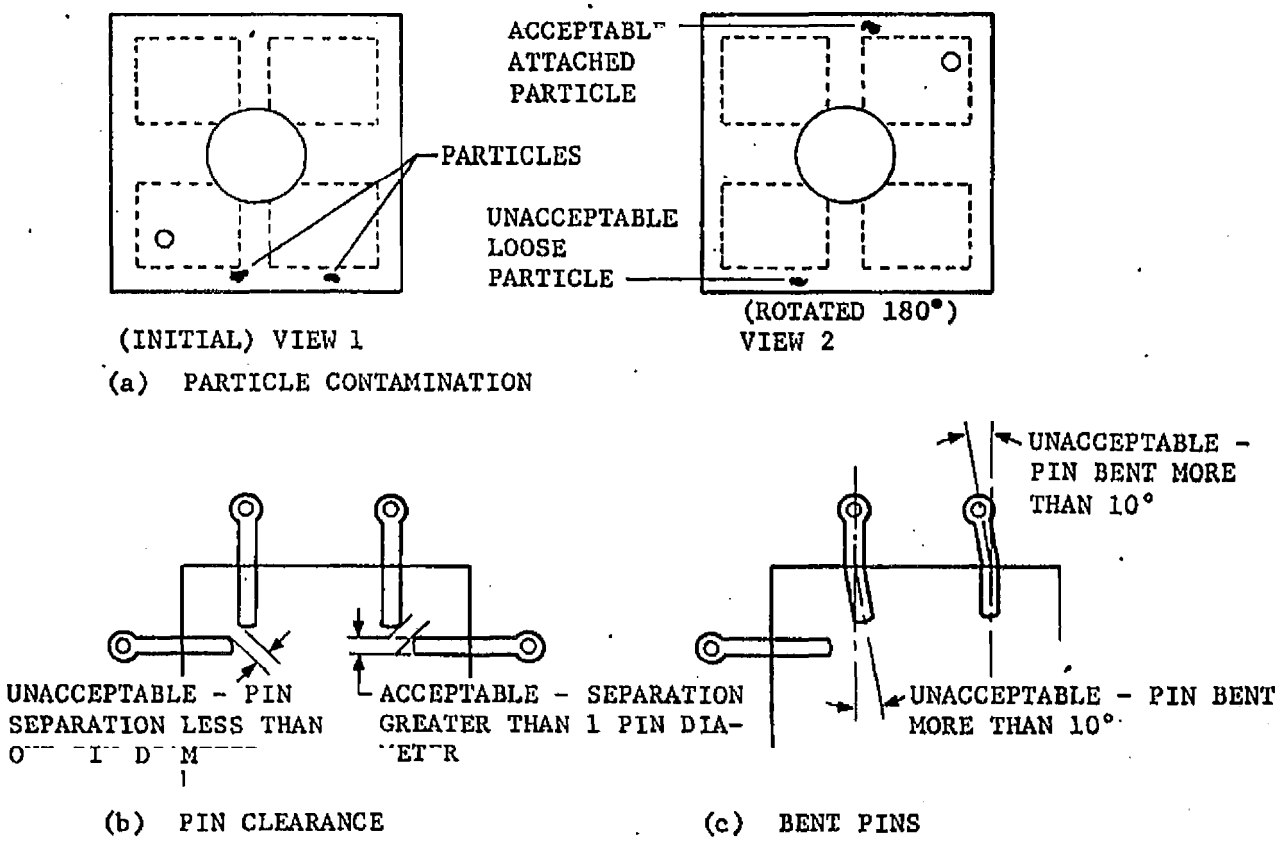

Figure A-12. Acceptable and unacceptable workmanship for metal box can quad transistors

APPENDIX B
INTEGRATED CIRCUITS

10. SCOPE

10.1 This appendix establishes the criteria for acceptance and rejection of integrated circuits supplied under the provisions of this standard.

20. Views

20.1.1 Round can type (TO-5 etc.) cases - Three views shall be taken. One view shall be taken with X-rays penetrating the case normal to a plane passing through lead number one. Using lead one as an axis, rotate the device 90 degrees and take a second view. A third view shall be taken along the Y-axis. (The Y-axis is the cylindrical axis.)

20.1.2 Flat pack or dual-in-line - Two views shall be taken. One view shall be taken with the X-rays penetrating the case normal to the main axis (perpendicular to the plane of the chip). A second view shall be taken with the X-rays penetrating a side (preferably a side containing no leads).

20.2 Examination - The integrated circuit examination shall include, but not be limited to, inspection for foreign particles, build-up of bonding material, proper placement of lead wires, proper bond of lead to semiconductor element and lead to terminal post, accuracy of semiconductor element geometry, and mounting of semiconductor element.

20.2.1 Presence of extraneous matter - Extraneous matter that shall be cause for rejection shall include, but not be limited to:

(a) Any particle greater than 0.0254 mm (0.001 in.) See Figure B-1(a).

(b) Any wire extending more than 0.0762 mm (0.003 in.) beyond its bond. See Figure B-1(a).

(c) Any burr on a post (header lead) greater than 0.0254 mm (0.001 in.) in its major dimension.

(d) Excessive semiconductor element bonding material buildup.

(1) A semiconductor element shall be mounted and bonded so that it is not tilted more than 10 degrees from the normal mounting surface. Where the bonding agent accumulates around the perimeter of the semiconductor element and

touches the side of the semiconductor element; it shall not accumulate to a thickness greater than that of the semiconductor element. See Figure B-2(b). Where the bonding agent is built up but is not touching the semiconductor element, the buildup shall be not greater than twice the thickness of the semiconductor element. See Figure B-2(c).

(2) There shall be no visible extraneous material 0.0254 mm (0.001 in.) or larger in the major dimension. Loose bonding material will be considered extraneous material. Excessive (but not loose) bonding material will not be considered extraneous unless it fails to meet the requirements of 20.2.1 (d) (1) or if the accumulation of bonding material is in the pedestal form. See Figure B-3(b).

(e) Gold flaking on the header or posts or anywhere inside the case.

20.2.2 Inadequate or abnormal construction - In the examination of integrated circuits, the following aspects, among others, shall be considered inadequate or abnormal construction:

(a) Contact area voids in excess of one-fourth of the total contact area. See Figure B-1(b).

(b) A single void equal to the length of the semiconductor element or single void that traverses the entire width of the semiconductor element. See Figure B-1(b).

(c) A single void in the die attachment area opening on two adjacent sides of the die and extending under two or more bonding pads of the die. See Figure B-1(c).

(d) Extraneous ball bonds attached to the semiconductor element.

(e) Wires present other than those connecting specific areas of the semiconductor element to the external leads, except where the design of the integrated circuit calls for the use of such additional wires, or the jumper wires necessary to trim load resistors. See Figure B-1(a).

(f) Inadequate clearance. Acceptable devices shall have adequate internal clearances to assure that the elements cannot contact one another or the case. Depending upon the case type, devices shall be rejected for the following conditions:

(1) Flat pack and dual-in-line.

(a) Any ball bond that is less than 0.0254 mm 0.001 in.) from another bond (Y plane only). See Figure B-4(a).

(b) Any lead wire which has less than two wire diameters separation from another lead wire at a distance of 0.254 mm (0.010 in.) or greater from the die bond (Y plane only). See Figure B-4(e).

(c) A lead wire which crosses over another bond or lead wire (Y plane only). See Figure B-4(c).

(d) Any lead wire within two wire diameters of the case or external lead to which it is not attached (X and Y plane). See Figure B-4(d).

(e) Clearance between the lead frame and metal package of less than three wire diameters. See Figure B-4(b).

(f) Any lead wire where bow is less than 7 or more than 10 lead wire diameters from a straight line as drawn from the pad bond to the post bond (X plane only). See Figure B-5.

(2) Round transistor can (TO-5 etc) type (see Figure B-6).

(a) Any lead wire within 0.127 mm (0.005 in.) of the case or external lead to which it is not attached (X and Y plane). See Figure B-6(a).

(b) Lead wires which sag below an imaginary plane across the top of the bond (X plane only). See Figure B-6(b).

(c) Any ball bond which is less than 0.0254 mm (0.001 in.) from another bond (Y plane only). See Figure B-6(c).

(d) Any lead wire which has less than two wire diameters separation from another lead wire at a distance of 0.254 mm. (0.010 in.) or greater from the die bond (Y plane only). See Figure B-6(f).

(e) Any lead wire that crosses over another bond or lead wire (Y plane only). See Figure B-6(d) and (e).

(f) Any lead wire where bow is less than 7 or more than 10 lead wire diameters from a straignt line as drawn from the pad bond to the post bond (X plane only). See Figure B-6(g).

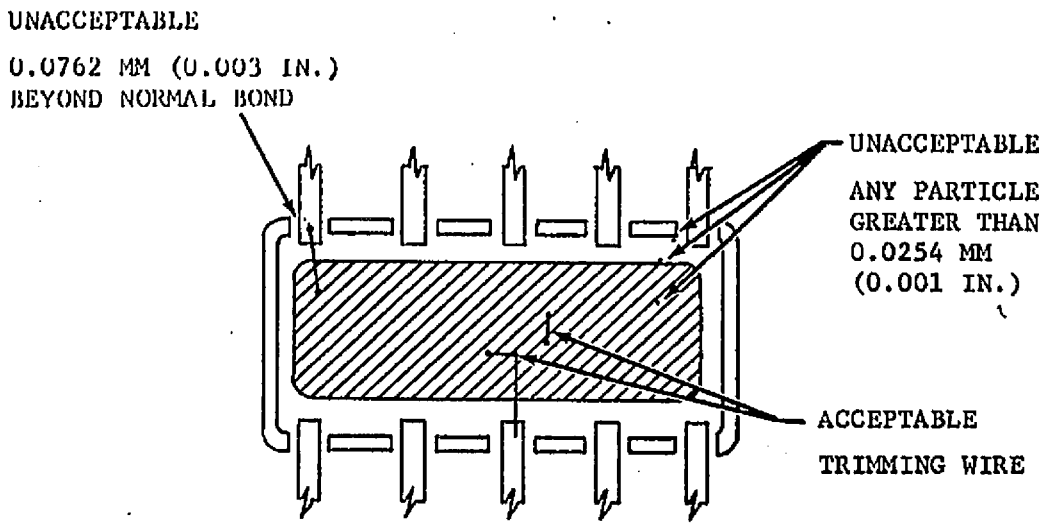

(a) PARTICLE LOCATIONS, PIGTAILS AND TRIMMING WIRES

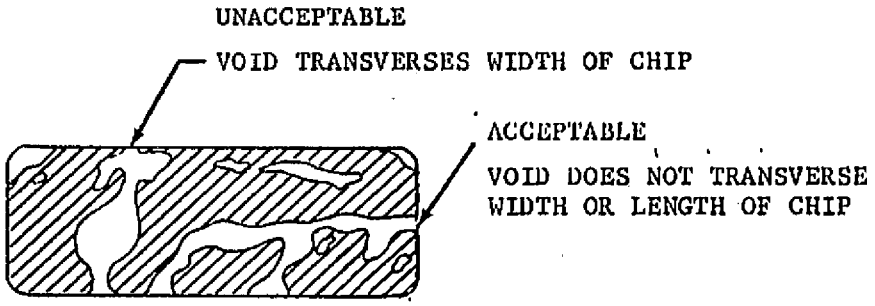

(b) VOIDS UNDER CHIPS

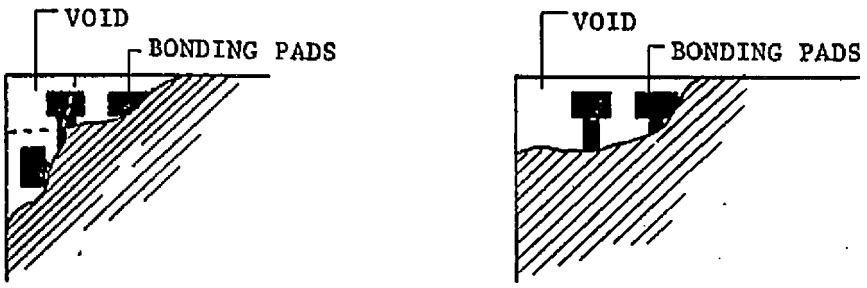

(c) VOID UNDER CHIP CORNER

Figure B-1. Particle locations, pigtails trimming wires and voids

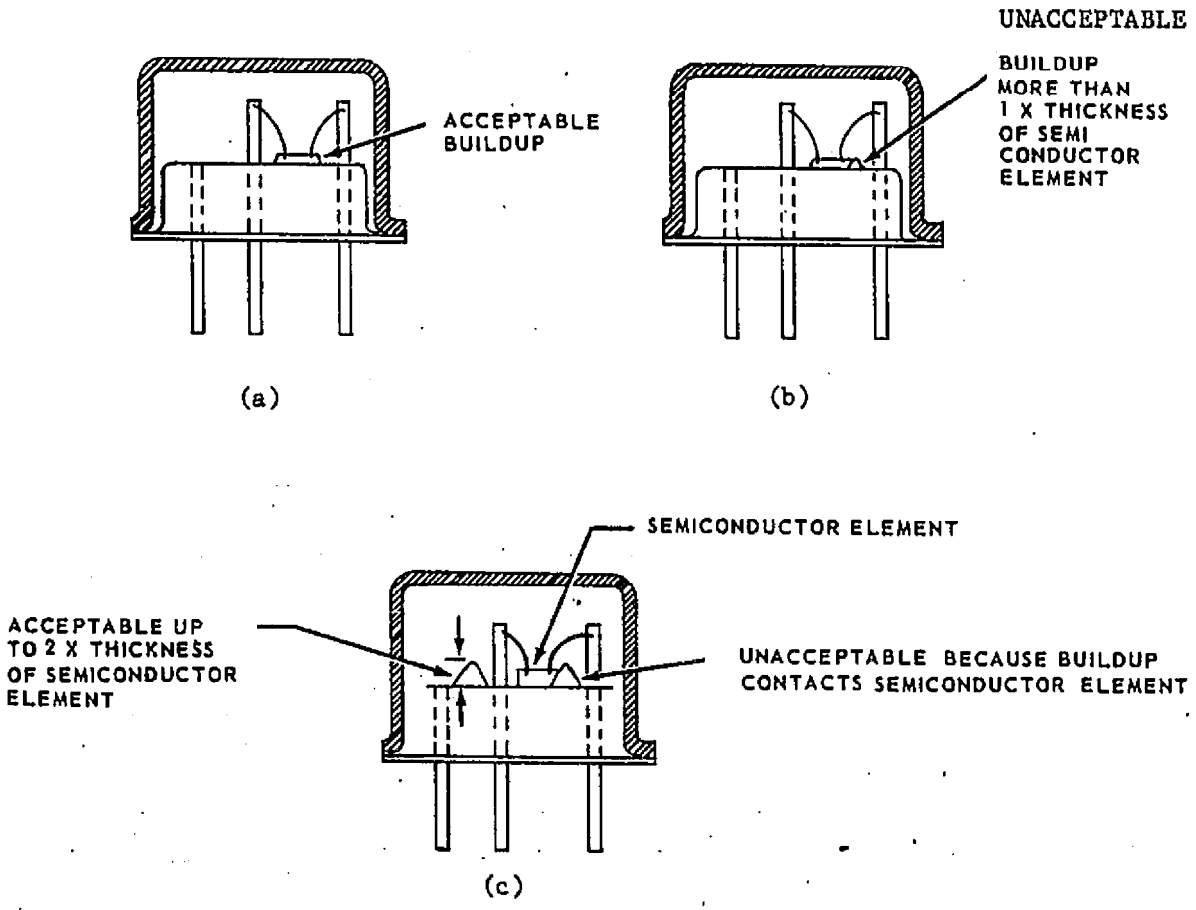

Figure B-2. Acceptable and unacceptable bonding material buildup

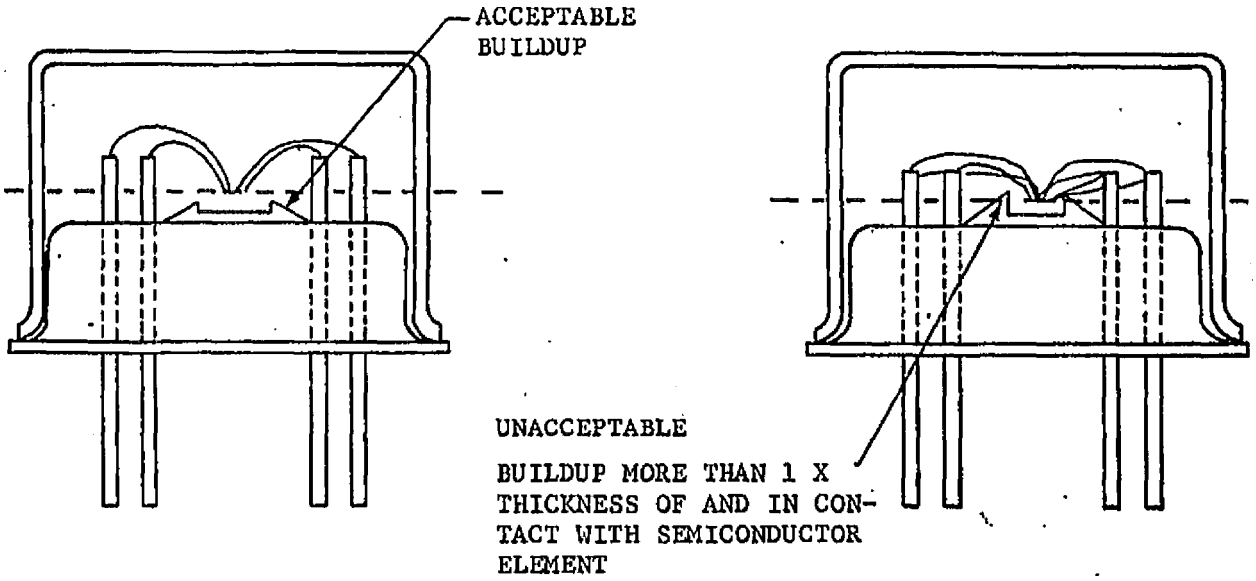

(a)

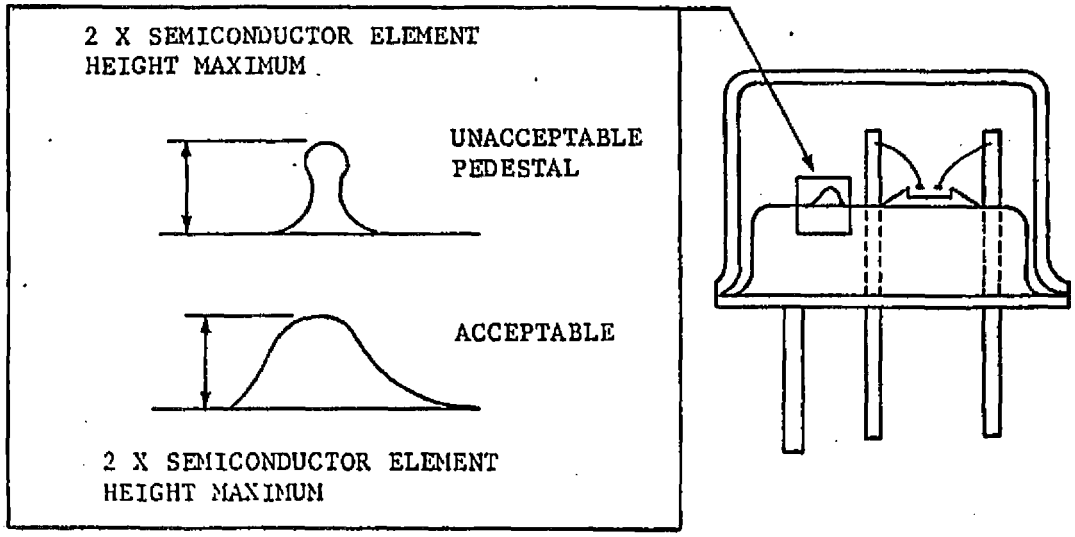

(b)

Figure B-3. Extraneous bonding material buildup

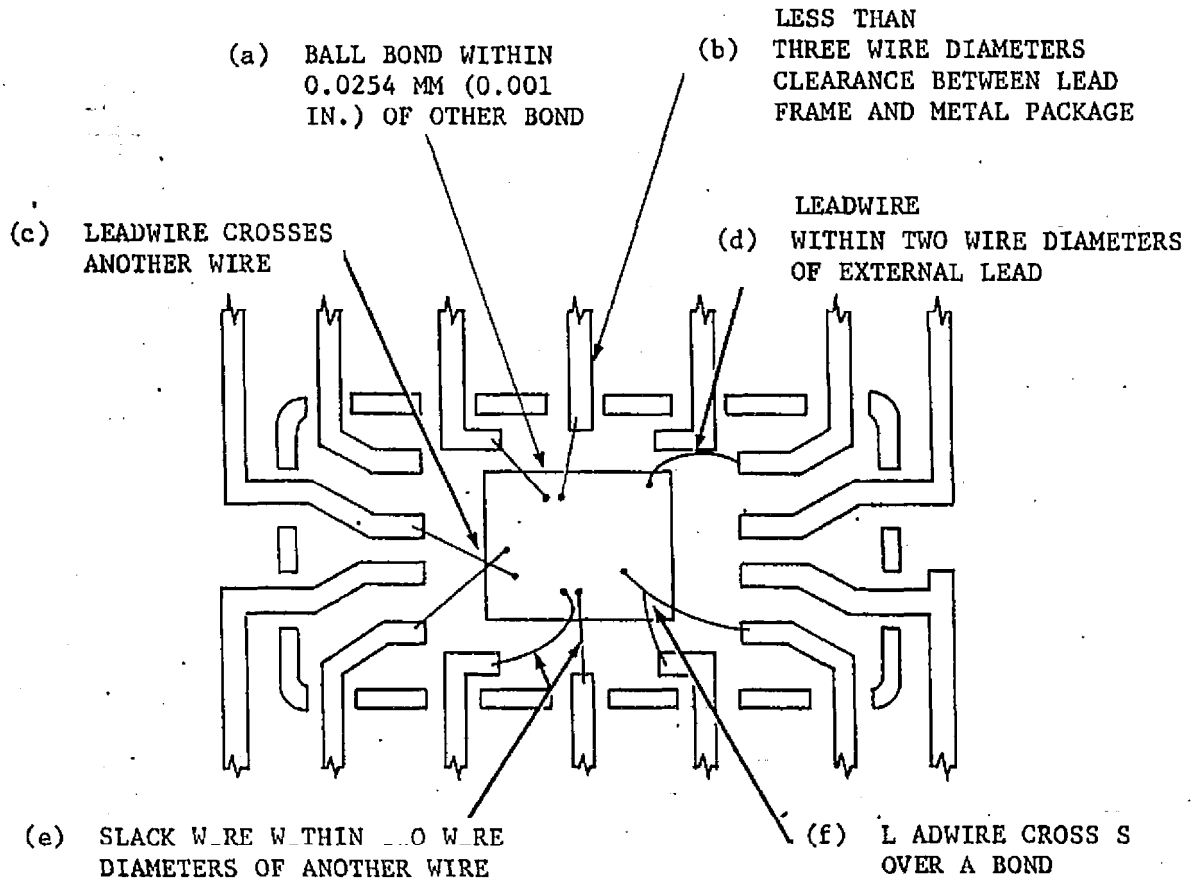

Figure B-4. Unacceptable clearance in dual-in-line and flat pack type devices

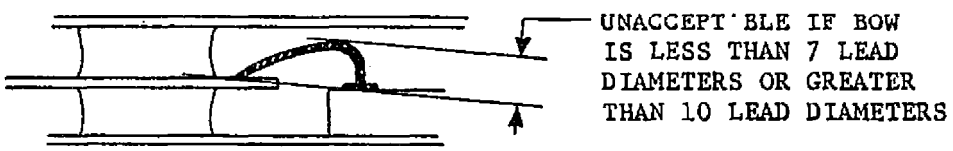

Figure B-5. Unacceptable lead wire bow

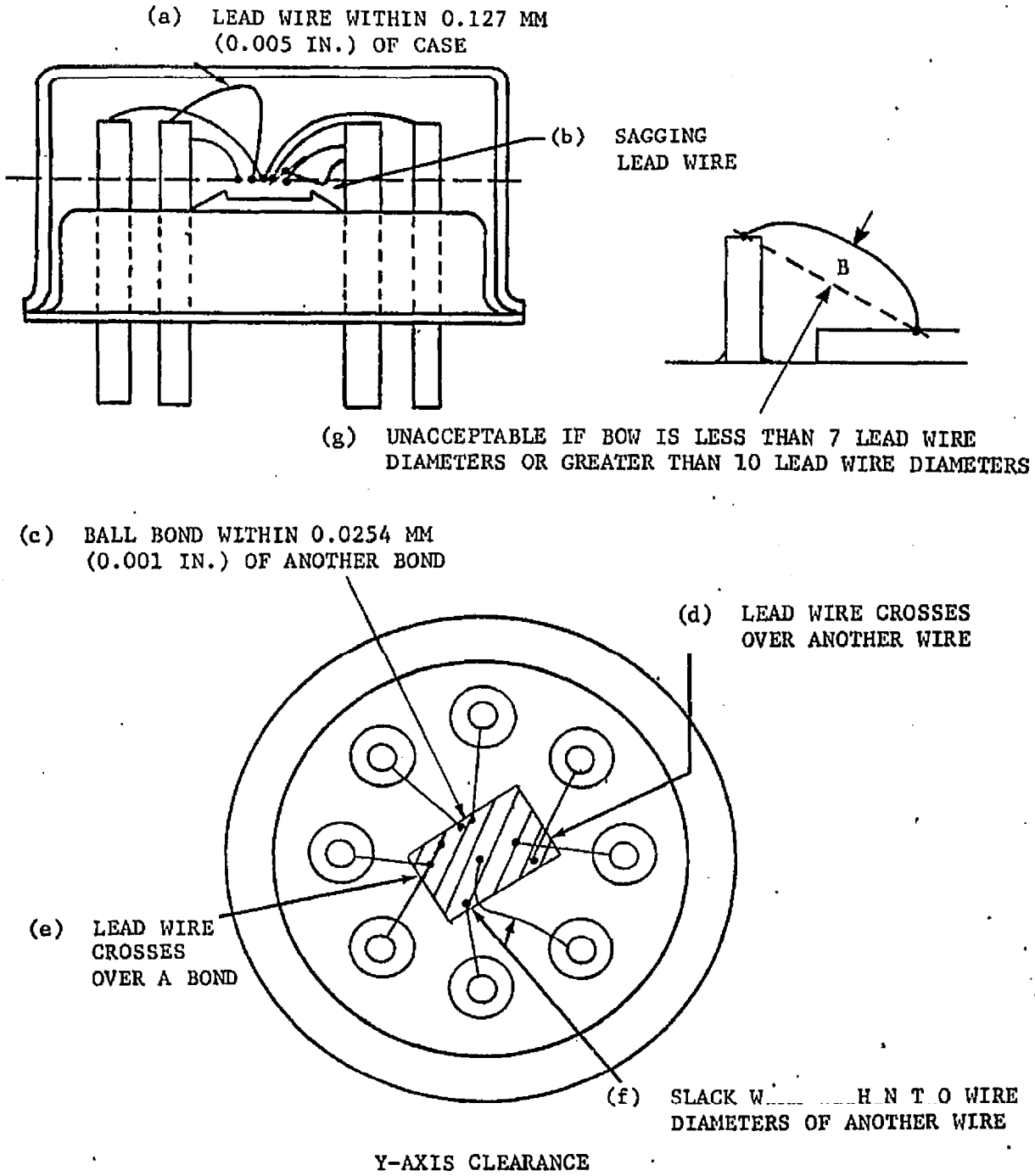

Figure B-6. Unacceptable clearance in round transistor can type

APPENDIX C
DIODES

10. SCOPE

10.1 This appendix establishes the criteria for acceptance and rejection of diodes supplied under the provisions of this standard.

20. REQUIREMENTS

20.1 Views

20.1.1 Tubular parts - Two views, normal to the major axis of the part, shall be taken. One view shall be 90 degrees from the other. If deemed necessary by the testing laboratory or by the MSFC representative, a third view shall be required.

20.1.2 Voidless butt constructed diodes - Three views as shown in Figure C-1 shall be taken of voidless butt constructed diodes.

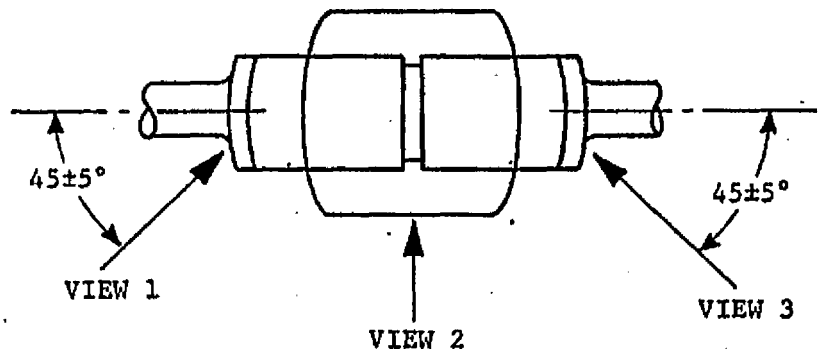

(B) VOIDLESS BUTT CONSTRUCTED DIODE

Figure C-1

20.2 Examination - The diode examination shall include, but not be limited to, inspection for extraneous material, solder splash, proper shape and placement of lead wires or whiskers, proper bond of lead or whisker to semiconductor element and lead or whisker to terminal post, proper bond of semiconductor element to header, and accuracy of semiconductor element geometry.

20.2.1 Lead wire - The lead wire or whisker shall not extend beyond the post bond by a distance greater than twice the diameter of the wire. There shall be no loops or excessive bends in the lead wire.

20.2.2 Extraneous material - There shall be no loose or attached extraneous material 0.0254 mm (0.001 in.) or larger in size. Excessive or loose semiconductor element bonding material shall be considered extraneous material.

20.2.3 Clearance - Acceptable devices shall have the following adequate clearances.

20.2.3.1 Whisker - The minimum distance from the whisker to the case shall be equal to 1/2 the diameter of the external lead wire. See Figure C-2.

20.2.3.2 Bonding material - The minimum distance from the semiconductor die or any eutectic bonding material to the case shall be 0.0508 mm (0.002 in.) See Figure C-3.

20.2.4 Whisker deformities - Diode whisker deformities shall be limited to the following:

(a) The diode whisker shall not be tilted more than 5 degrees in any direction from the diode lead axis.

(b) The whisker shall not be deformed to the extent that it touches itself. The minimum air gap between any two points on the S-shaped whisker shall be twice the diameter or thickness of the whisker wire.

20.2.5 Monolithic case construction (whiskerless)

(a) The anode and cathode lead connections shall not be displaced more than 0.254 mm (0.01 in.) with respect to the central axis of the device.

(b) The semiconductor element shall not be misaligned (see 20.2.6 and Figure C-5).

(c) Any glass void (bubble) that exceeds 0.254 mm (0.010 in.) in any dimension shall not be acceptable (see Figure C-7).

20.2.6 Misaligned diode semiconductor element - The diode semiconductor element mount shall not be tilted more than 15 degrees from normal to the main axis of the diode (see Figure C-4).

20.2.7 Overhanging diode semiconductor element - In glass diodes, the semiconductor element (die) shall not hang over the edge of the header by more than 10 percent of the total area of the semiconductor element.

20.2.8 Chipped glass - Any visible indication of glass missing on the body or lead exterior or interior surface shall be rejected if the major axis of the chipped glass is greater than 0.127 mm (0.005 in.).

20.2.9 Semiconductor element mounting - A minimum of 90 percent of the semiconductor element base area shall be bonded to the mounting surface.

20.2.10 Lead welds - The welds between the leads and the heat sink slugs on double heat sink (voidless butt construction) devices shall be examined for porous, blown, fractured, or incomplete welds. Voids in the weldment shall not extend more than 15 percent of the lead wire diameter from any edge, and there shall be no voids whatever in the central part of the area that should be welded. See Figure C-6.

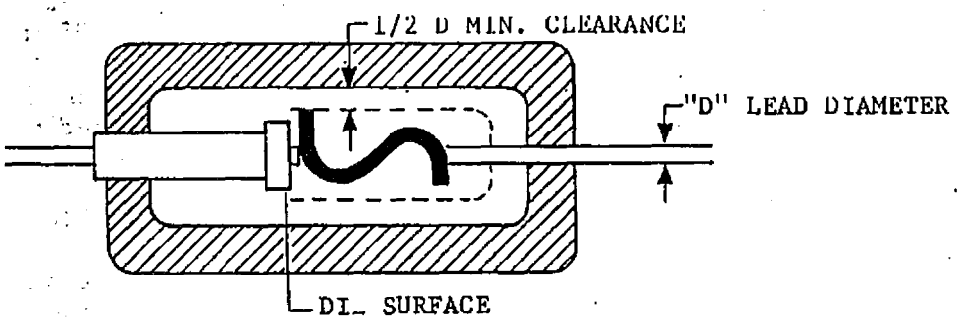

Figure C-2. Minimum whisker clearance zone

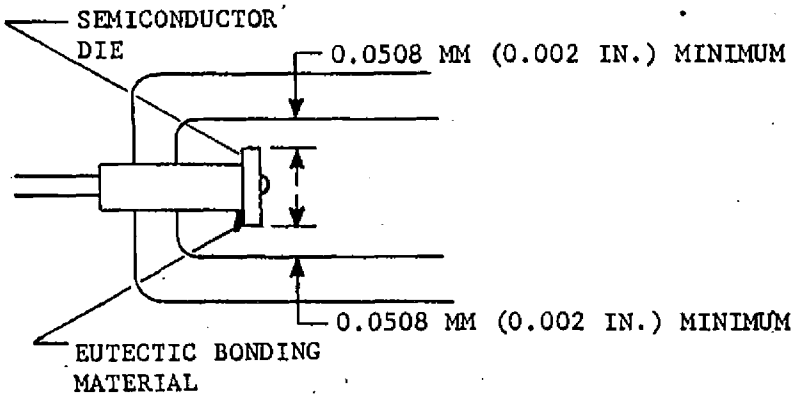

Figure C-3. Minimum bonding clearance

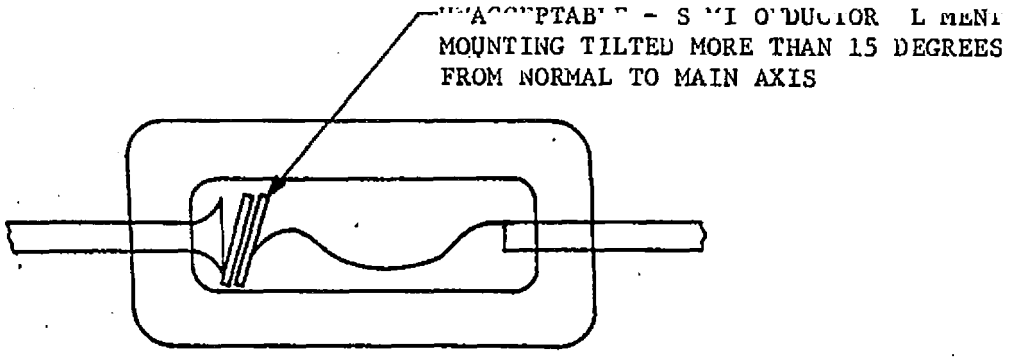

Figure C-4. Unacceptable semiconductor mounting

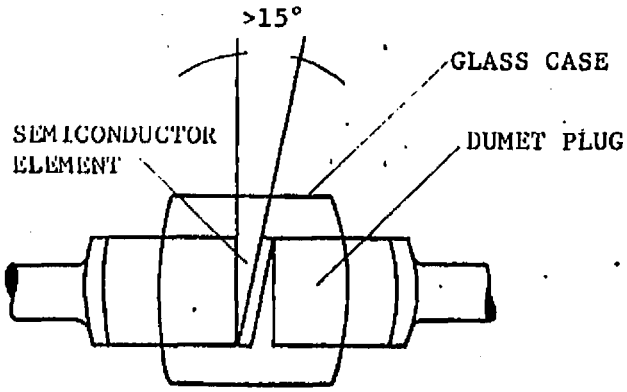

UNACCEPTABLE-ELEMENT TILTED MORE THAN 15 DEGREES NORMAL TO MAIN AXIS

Figure C-5. Unacceptable monolithic dual heat sink diode

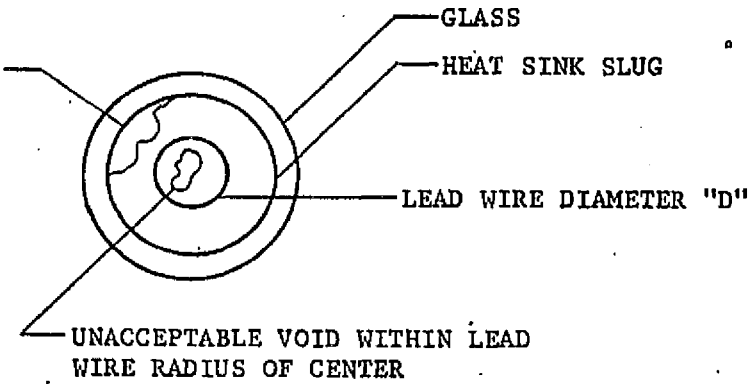

Figure C-6. Unacceptable weld voids

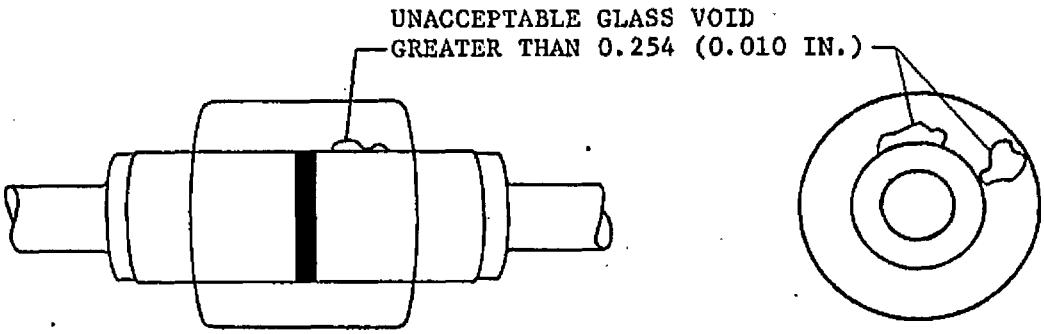

Figure C-7. Unacceptable glass voids

APPENDIX D
RESISTORS

10. SCOPE

10.1 This appendix establishes the criteria for acceptance and rejection of insulated film, high stability encapsulated film, wire wound power, and wire wound accurate resistors supplied under the provisions of this standard.

20. REQUIREMENTS

20.1 Views - Two views, normal to the major axis of the part, shall be taken. One view shall be 90 degrees from the other. If deemed necessary by the testing laboratory or by the MSFC representative, a third view shall be required.

20.2 Examination - The resistor examination shall include, but not be limited to, inspection for extraneous material on the resistance element or within the enclosure, misaligned or mispositioned resistor core, misaligned electrodes or end caps, and physical damage of electrical elements of the resistor. Refer to Figure D-1 and D-2 for insulated film constructed examples, Figures D-1 through D-4 for high stability resistors, Figures D-5 and D-6 for wire wound power resistors, and Figures D-5 and D-7 for wire wound accurate resistors.

20.2.1 Extraneous material - There shall be no loose or attached extraneous material 0.0508 mm (0.002 in.) or larger in size on the resistance element, windings, or within the enclosure. See Figures D-1(a), D-6(b), and D-7(c).

20.2.2 Misaligned core - The core shall be aligned within 5 degrees of a line connecting the centers of the two electrical connections. See Figures D-6(j), and D-7(f).

20.2.3 Mispositioned core - Core positioning shall be as specified herein for each specific type of resistor.

20.2.3.1 Insulated film and high stability film resistors - The core of the resistors shall not be positioned less than 75% of the maximum possible distance into each end cap nor shall it be fully inserted (bottomed). Cores that are inserted less than 75% shall be rejected. See Figures D-2(b) and D-6(e).

20.2.3.2 Wire wound power and accurate resistors - The core of the resistor shall be positioned in accordance with Figure D-5. Dimension A shall be 30% to 70% of A plus B. Diminsion C shall be 40% to 60% of C plus D. In addition, the core shall be positioned into

each end cap a distance equal to 75% or greater of the depth of the cap. Cores not inserted 75% or greater shall be rejected.

20.2.4 Misaligned electrode - The center lines of the internal electrodes shall not form an angle greater than 5 degrees. See Figure D-6(j).

20.2.5 Physical damage - There shall be no visible cracks, splits, or chips from the core or resistive material of any resistor. See Figures D-1(b), D-6(a), and D-6(f).

20.2.6 End Caps - End caps shall fit closely onto the core and shall be aligned with the core within five degree maximum. No voids shall be visible between the inner edge of a round end cap and the core material. Hexagonal or octagonal end caps shall contact the core at a point along each flat of the end cap. Cracked, undersize end caps shall be cause for rejection, See Figures D-2(a), (d), and (e), D-3(a); D-6(d); and (i); and D-7(d), (e), and (g).

20.2.7 Talon type leads - Talon type leads are unacceptable. All parts containing talon leads shall be rejected.

20.2.8 Misaligned leads - The center line of the leads shall not form an angle greater than 5 degrees.

20.2.9 Windings - Examination of wire wound resistors shall be as follows.

20.2.9.1 Power resistors - The windings of the resistor element on the core shall be uniformly spaced within one ribbon width for flat wire and within two wire diameters for round wire. Also, minimum acceptable winding to winding spacing shall be one-half the width of the ribbon or one wire diameter. Furthermore, no gap shall be visible between the ribbon and the core. See Figure D-6(c).

20.2.9.2 Accurate resistors - Each coil shall have approximately the same number of turns of wire and be on the same style and size bobbin. There shall be no cocked bobbins. In addition, there shall be no excessively loose turns visible on a coil. A separation of 0.25 mm (0.010 in.) or more between a winding and the next inner layer of winding shall be considered excessive. See Figures D-7(a), (b), (j) and (k).

20.2.10 Lead weld - The external lead-wire-to-end-cap weld shall be uniform and no gap shall be visible between the end of the lead wire and the face of the end cap. See Figure D-2(c) and D-6(h).

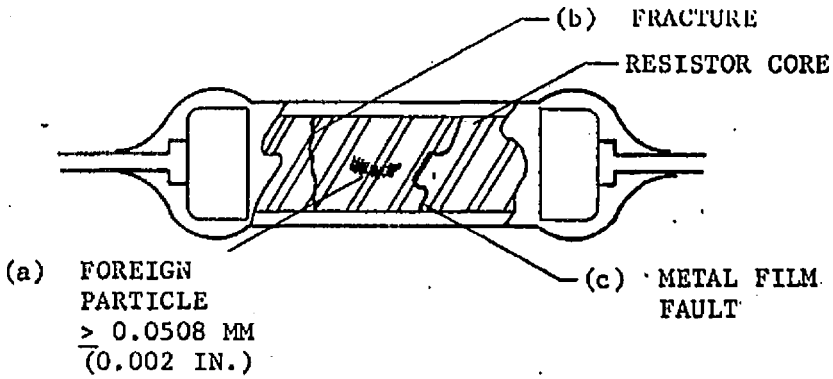

Figure D-1. Unacceptable workmanship for insulated film and high stability encapsulated film resistor core

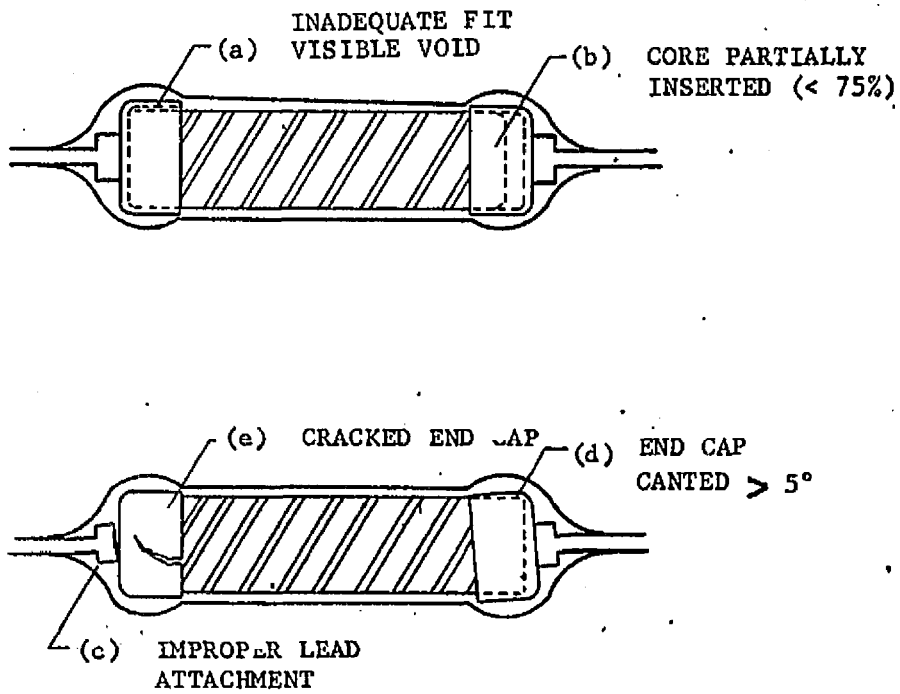

Figure D-2. Unacceptable workmanship for insulated film and high stability encapsulated film resistors

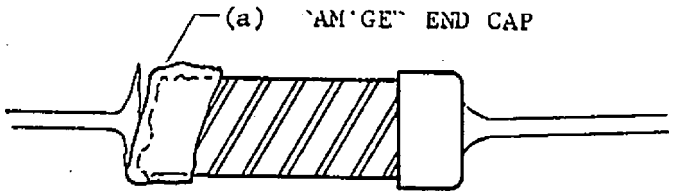

Figure D-3. Unacceptable workmanship for high stability encapsulated resistors

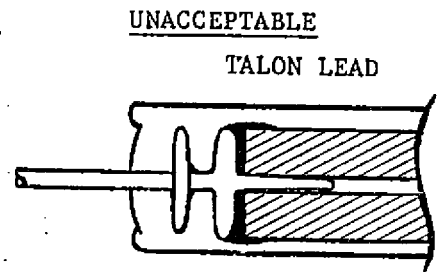

Figure D-4. Talon lead construction - unacceptable

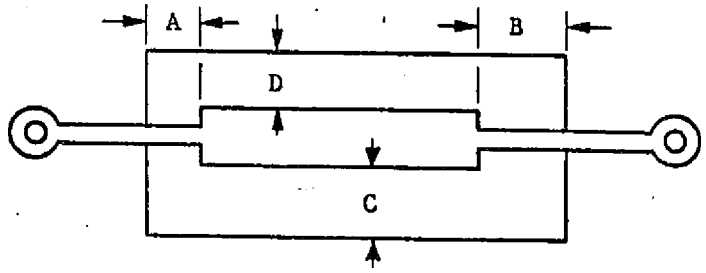

A = 30 TO 70% OF A + B
C = 40 TO 60% OF C + D

Figure D-5. Core positioning for molded wire wound resistors

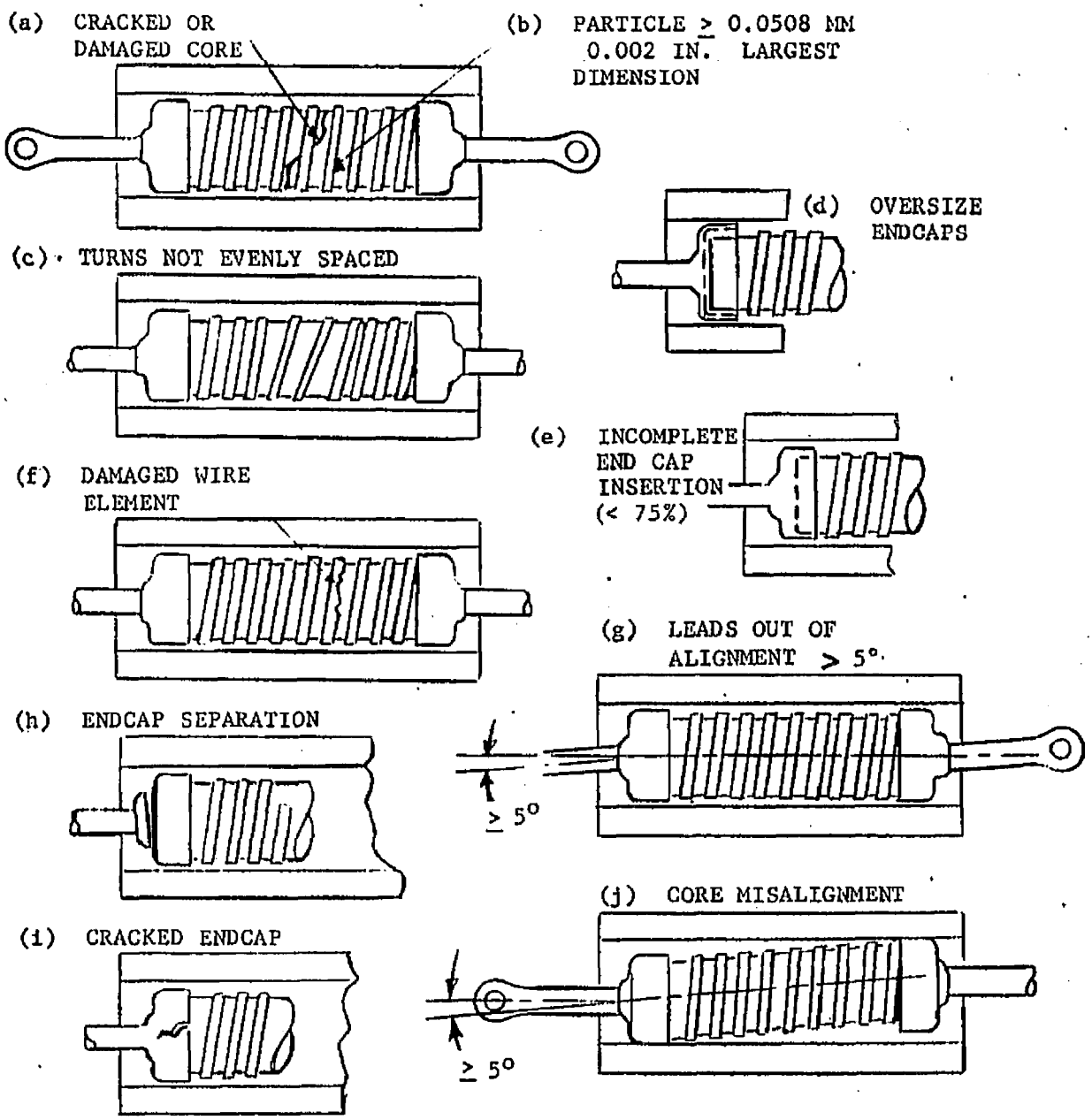

Figure D-6. Unacceptable workmanship for wire wound power resistors

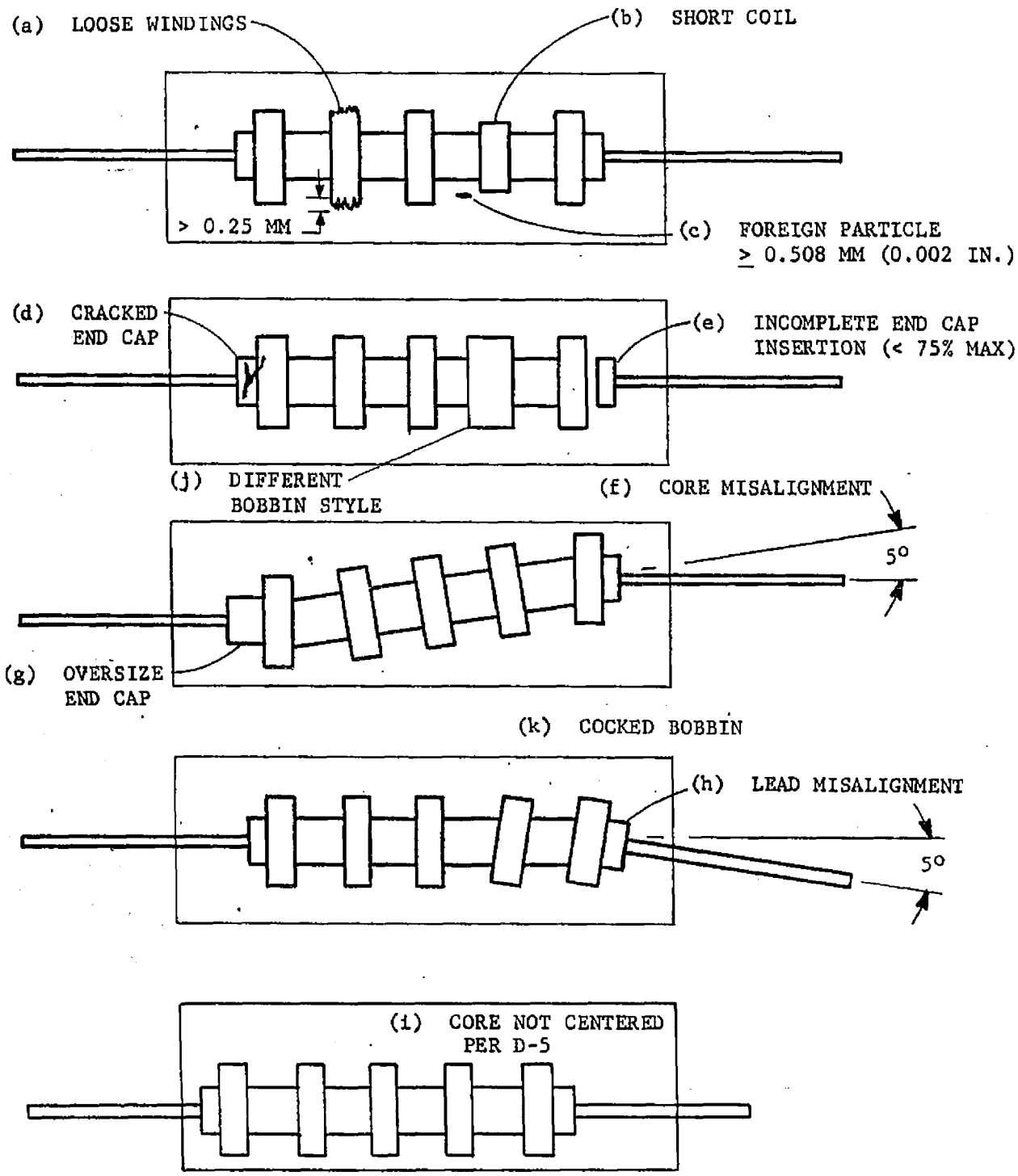

Figure D-7. Unacceptable workmanship for wire wound accurate resistors

APPENDIX E

CAPACITORS

10. SCOPE

10.1 This appendix establishes the criteria for acceptance and rejection of solid tantalum, non-solid tantalum, tantalum foil, hermetically sealed plastic, paper, and paper/plastic and ceramic capacitors supplied under the provisions of this standard.

20. REQUIREMENTS

20.1 Views

20.1.1 Tubular units - Two views, normal to the major axis of the part, shall be taken. If deemed necessary by the testing laboratory or procuring activity representative, additional views shall be required.

20.1.2 Flat chip units - One view shall be taken normal to the plane of the chip.

20.2 General examination - The examination for all capacitors shall include, but not be limited to, inspection for faulty lead connections, misalignment of internal parts, solder or weld defects, and physical damage of electrical elements.

20.2.1 Faulty lead connection - There shall be no evidence of improperly made lead connections.

20.2.2 Misaligned parts - Criteria for rejection due to misalignment of anodes, seals, eyelets, or spacers shall be as specified in the detail examinations below.

20.2.3 Solder defects - Criteria for rejection due to soldering defects shall be as specified in the requirements for individual capacitors given below.

20.2.4 Physical damage - There shall be no holes, cracks, splits, or chips of electrical elements.

20.3 Specific examinations - Examinations that are peculiar to the individual capacitor types in addition to the general examinations, are listed below. All capacitors failing to meet these requirements shall be rejected. Examples of typical defects, as well as acceptable devices, are shown.

20.3.1 Solid tantalum - Figure E-1 shows acceptable variations which are normal. Unacceptable defects which may cause capacitor degradation or failure during periods of electrical, mechanical, or environmental stress are shown in Figure E-2.

20.3.1.1 Tubelet solder defects - Defects which are peculiar to the tubelet and can be induced during anode lead retinning or when mounting the capacitor on the printed circuit board are shown in Figure E-3.

20.3.1.2 Non-polar capacitor defects - All the preceeding reject criteria for polarized capacitors applies also to non-polarized capacitors. Non-polars consist of two polars, soldered back-to-back in a common metal sleeve. Internal solder reflow of the polars is possible during manufacturing as shown in Figure E-4.

20.3.2 Non-solid electrolyte tantalum slug - This section contains specific reject criteria for non-solid tantalum slug capacitors. See Figure E-5 for acceptable and unacceptable workmanship.

20.3.2.1 Metallic particles - There shall be no metallic particles within the case. Refer to Figure E-5(b).

20.3.2.2 Tilted slug - Tilted slugs are unacceptable if the slug shoulder is touching the inside of the case. See Figure E-5(d).

20.3.2.3 Bent leads - Leads having an "S" shaped bend are unacceptable regardless of the cause or the position of the capacitor slug. See Figure E-5(d). Leads bent in a smooth arc are acceptable if there are no nicks, gouges, necked-down areas or other defects of the lead.

20.3.2.4 Off-center slug - The allowable amount of off-centering will vary with case size and manufacturer. Noticeable off-centering beyond manufacturer's tolerance or uncommon to the lot average shall be cause for rejection of the capacitor. Off-centering that reduces the normally available spacing between capacitor slug and case by 25 percent or more shall be cause for rejection. See Figure E-5(e).

20.3.2.5 Physical damage - There shall be no evidence of a chipped or cracked anode or other physical damage to the tantalum slug. Refer to Figure E-5(e).

20.3.3 Hermetically sealed tantalum foil capacitors - This section contains X-ray reject criteria for hermetically sealed tantalum foil capacitors. Typical examples of acceptable and unacceptable tantalum foil capacitor X-rays are shown in views (a) through (e) of Figure E-6.

20.3.3.1 Telescoping of foil - Although the allowable amount of telescoping will vary with the manufacturer and case size, noticeable telescoping uncommon to the lot average shall be cause to reject the capacitor. See Figure E-6(b).

20.3.3.2 Metallic foreign particles - Metallic foreign particles shall be cause for rejection if the largest dimension of any one particle or the sum of the largest dimensions of several particles exceed 0.010 inch (0.254 mm). See Figure E-6(c).

20.3.3.3 Lead defects - The portion of the internal lead which is perpendicular to the axis of the capacitor roll shall be no less than 0.8 mm (0.032 inch) from the closest edge of the foil whether the foil is telescoped or not. See Figure E-6(d).

20.3.3.4 Off-center capacitor element - Off-center capacitor elements shall be rejected if a lead is crumpled as shown in Figure E-6(e). The capacitor shall also be rejected if the distance A is equal to or less than one-half the distance B whether the lead is crumpled or not.

20.3.4 Hermetically sealed, paper, plastic, paper/plastic dielectric capacitors - This section contains X-ray reject criteria for hermetically sealed capacitors containing dielectrics which may consist of paper, plastic, or paper/plastic combinations. Typical examples of acceptable and unacceptable capacitors are shown in Figure E-7.

20.3.4.1 Extraneous material - Any metallic particle discernible within the capacitor section shall be cause to reject the part. See Figure E-7(b). Any single foreign particle larger than 0.1524 millimeters (0.006 inch) in its longest dimension, regardless of location, shall be cause to reject the part. See Figure E-7(c). A string of particles less than 0.1524 millimeters (0.006 inch) in diameter located between the section and case parallel to the axis of the section and which are continuous for more than 1/4 of the section length shall be cause to reject the part. See Figure E-7(d). Random end spray particles which are less than 0.1524 millimeters (0.006 inch) in diameter are typical of these capacitors and shall not be cause for rejection. Foreign particles, looped wire, metallization, or excess solder from the end spray cap shall not extend into the capacitor element when measured from the base of the end spray cap (refer to views (e) and (f) of Figure E-7).

20.3.4.2 Spikes and excessive solder - Spikes of end spray or solder other than described above shall not extend in any direction (refer to view (g) of Figure E-7). Solder in excess of the amount shown in Figure E-7(a) and (e) shall be considered excessive (refer to view (h) of Figure E-7).

20.3.4.3 Lead wire bends - Units having the internal lead wire bent shall be rejected (refer to view (i) of Figure E-7).

20.3.4.4 Tubelet sealing - Excess solder from tubelet sealing located within the case and on the lead wire shall be cause for rejection (refer to view (j) of Figure E-7).

20.3.4.5 Misalignment - Extreme misalignment or improper positioning of the sections within the case shall be cause for rejection (refer to view (k) of Figure E-7).

20.3.5 Non-hermetic ceramic - This section contains reject criteria for non-hermetic ceramic dielectric capacitors with leads internally soldered or welded to the capacitor chip.

20.3.5.1 Excess solder - Solder coating on the leads shall not extend beyond the normal configuration shown in view (a) of Figure E-8. Excess solder shall be cause for rejection.

20.3.5.2 Insufficient lead attachment - There shall be no gap (lead separation) in the bond of wire to capacitor chip. An example of this defect is shown in view (b) of Figure E-8.

20.3.5.3 Damaged leads - There shall be no damage such as nicks or gouges on either lead (See (c) of Figure E-8).

20.3.5.4 Chipped ceramic or electrode - There shall be no chipped areas along the ceramic or capacitor electrodes. An example is shown in view (d) of Figure E-8.

20.3.5.5 Excess swaging - Reduction in thickness of swaged capacitor leads shall not extend beyond the attachment to the capacitor ship more than 10 percent of the length of attachment (See view (e) of Figure E-8).

20.3.5.6 Element misaligned or off-center - The capacitor element shall be aligned in such a manner that it is completely embedded in the encapsulant. Capacitor elements that are misaligned to the extent that one edge is exposed as indicated by the radiograph, are unacceptable (See (f) of Figure E-8).

20.3.6 Excessive heat - When inspecting mounted capacitors, look for evidence of excessive heat, which will be indicated by solder reflow in the tubelet area. Any such evidence shall reject the capacitor and should result in an investigation of the capacitor installation procedures. All hermetically sealed solder-tubelet type capacitors should be considered heat-sensitive, requiring careful control of lead retinning, installation using heat-sinks, and care during any subsequent rework.

ACCEPTABLE

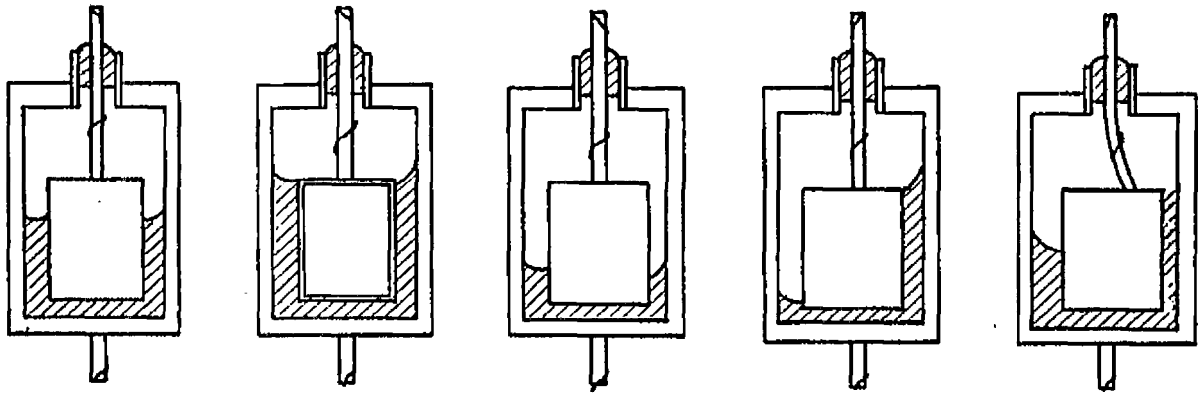

(a) NORMAL (b) MAXIMUM SOLDER (c) MINIMUM SOLDER (d) OFFSET SOLDER (e) OFFSET SLUG

ACCEPTABLE - MINOR DEFECTS

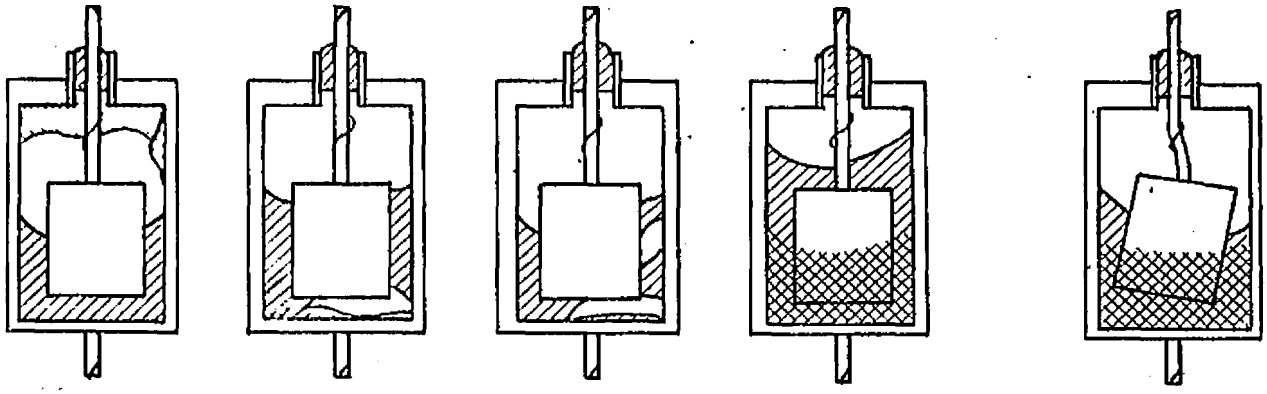

(f) SOLDER FLOW

NORMAL SOLDER FILLET PLUS FLOW DOWN CASE WALL.

(g). SOLDER VOIDS

SLUG COVERAGE WITH SOLDER AT LEAST 60%. VOID AT BOTTOM OF SLUG ONLY IF SIDES ARE WELL COVERED

(h) EXCESS SOLDER

TOP OF SLUG AND ANODE LEAD CLEARLY VISIBLE.

(i) COCKED SLUG

SLIGHT CURVE OF LEAD, AND SLUG NOT TOUCHING CASE.

Figure E-1. Acceptable solid tantalum capacitors

UNACCEPTABLE

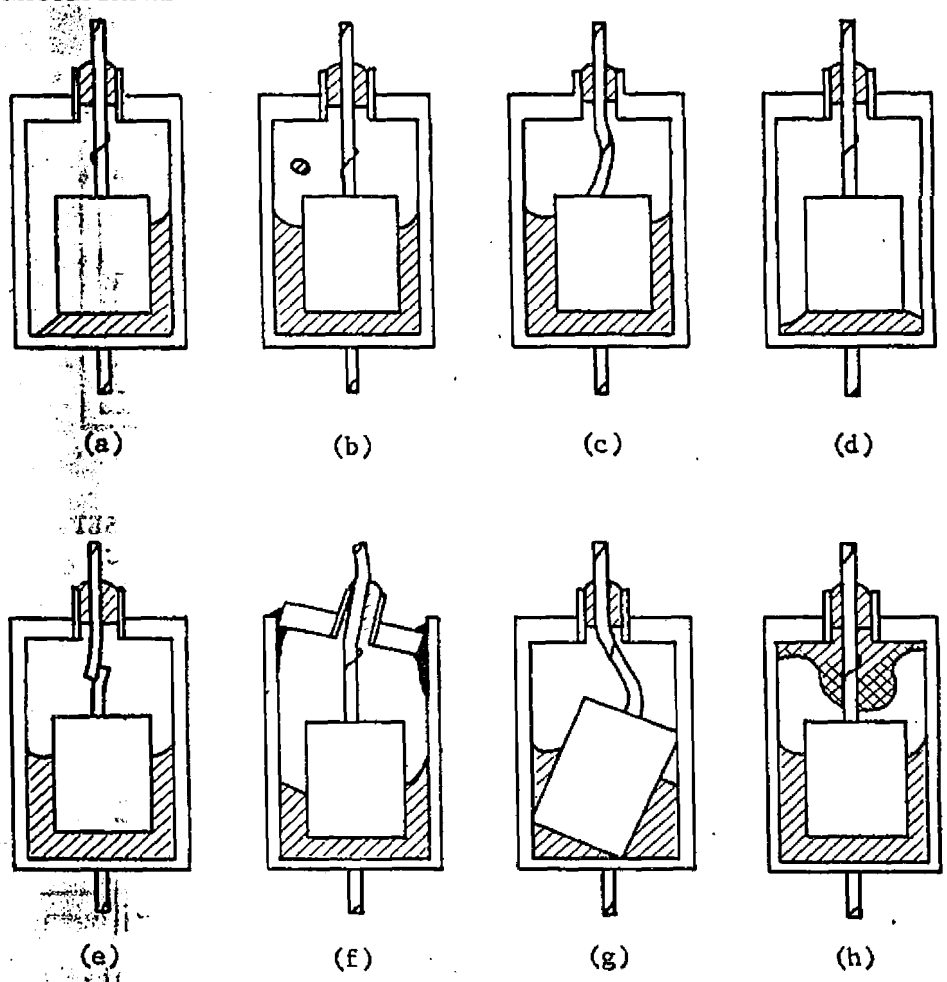

(a) Insufficient Solder - Coverage only one side and part of another. To be acceptable solder must catch lower left corner of slug base (see E-1(d)).

(b) Solder Ball - Round and dense in appearance. If adhered to case; will appear to move when second view is taken. If loose, it will probably roll to lower side of can and appear in same area as it did in first view. Reject 0.01 inch or larger.

(c) Stressed Lead - Bent during assembly, could cause damage to dielectric at vulnerable lead-slug junction.

(d) Low Solder - Usually the result of a too-small solder preform.

(e) Poor Splice Weld - Welds should be uniform and smooth, and aligned with the leads.

(f) Cocked Header - Rejectable if cocked to a noticeable degree and anode lead is visibly misaligned.

(g) Cocked Slug - Upper shoulder of slug touching inside wall of case.

(h) Header Solder Flow - Excess solder flow is indicated by a very dense image along the lower edge of the solder but feathered along the area closest to the header. Rejectable when flow area approaches top shoulder of slug.

Figure E-2.

UNACCEPTABLE

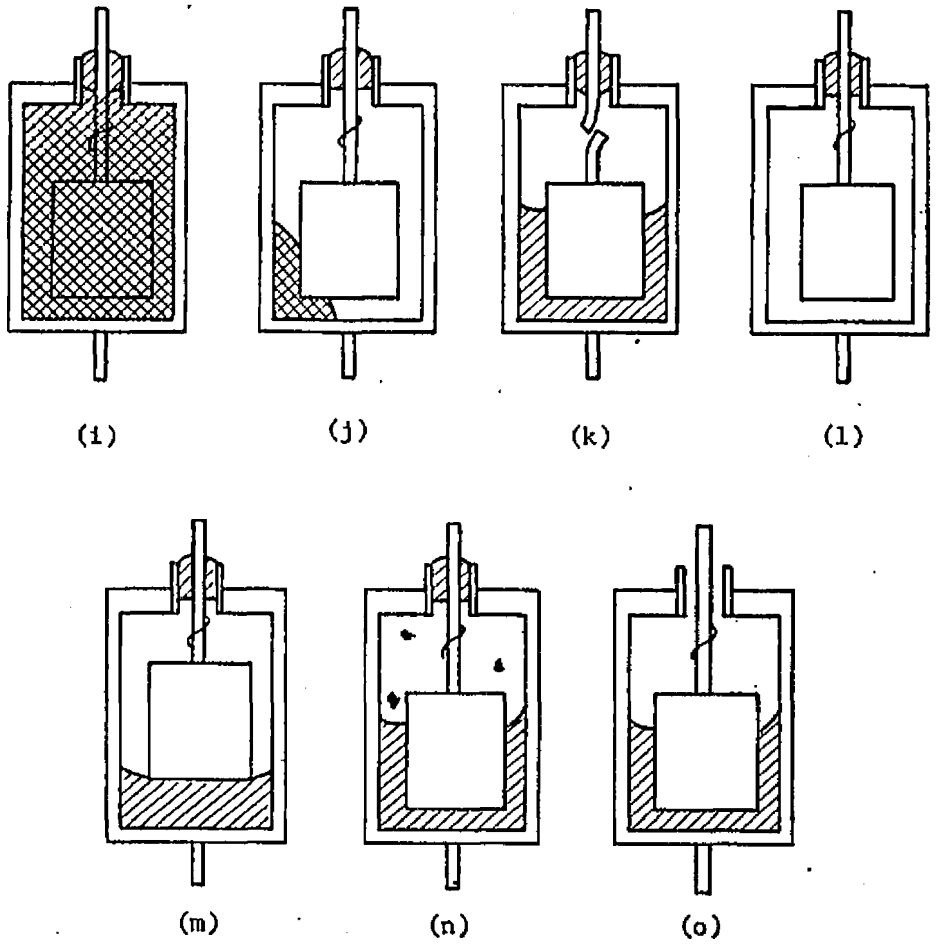

(i) Excessive Solder - Either the upper portion of the slug or the anode lead is obscured by solder.

(j) Insufficient Solder - Extreme case of insufficient solder indicating marginal bond to case.

(k) Broken Lead Weld - Could also indicate poor quality weld.

(l) No Solder in Case - Slug may be on bottom of case due to lack of solder preform during manufacture.

(m) High Slug - Slug "floating" on solder, may be touching header with inadequate solder tubelet closure above lead weld.

(n) Particles - Any irregular particle or pattern of particles exceeding 0.010 inch diameter.

(o) No Tubelet Solder - May perform ok electrically during test. Tubelet is normally sealed by hand, and this operation could be overlooked.

Figure E-2 (cont)

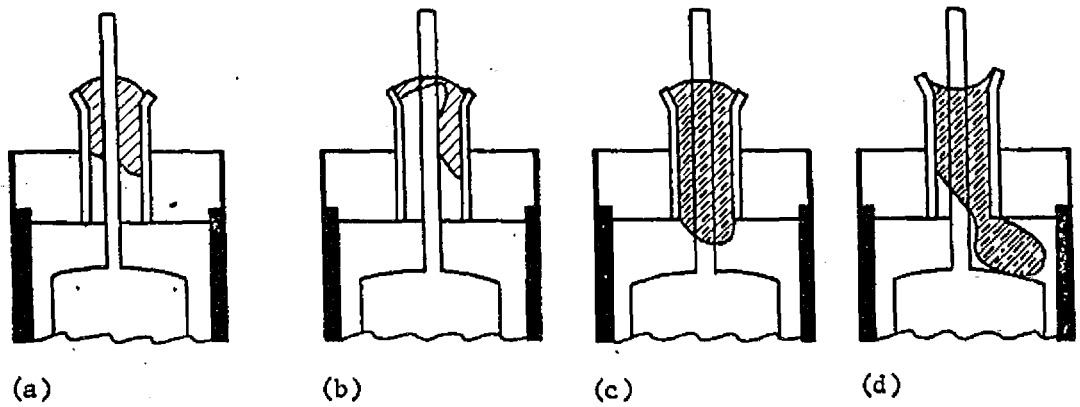

(a) Normal - A normal tubelet is usually 25% to 50% full of high-temperature solder. Quantity may vary from lot to lot since this is a hand operation, but solder should never extend beyond the bottom of the tubelet.

(b) Capped Fillet - A hollow configuration appears normal under external visual examination but X-ray shows only a "bubble" of solder. Reject when inner surface of "bubble" is above the top of the tubelet or if its cross-sectional thickness is equal to the tubelet wall thickness.

(c) Excess Fillet - Solder extends below bottom of tubelet.

(d) Reflow - Tubelet solder exhibits concave meniscus. Solder has flowed down from the tubelet along anode lead or has formed ball on top of slug.

Figure E-3. Tubelet solder defects in solid tantalum capacitors

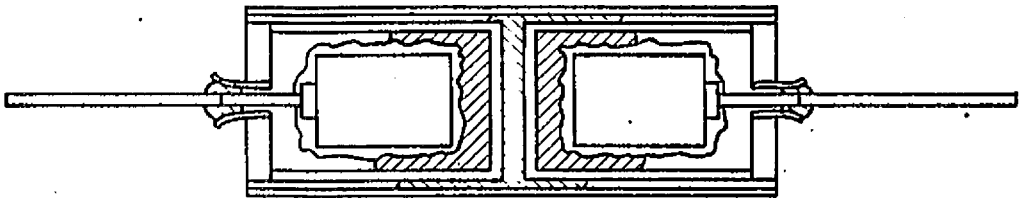

(a) ACCEPTABLE - WITH INTERNAL SOLDER ON BOTH SIDES OF SLUGS AND THE CONNECTING SOLDER RUNNING PART WAY UP THE OUTSIDE OF EACH CAN.

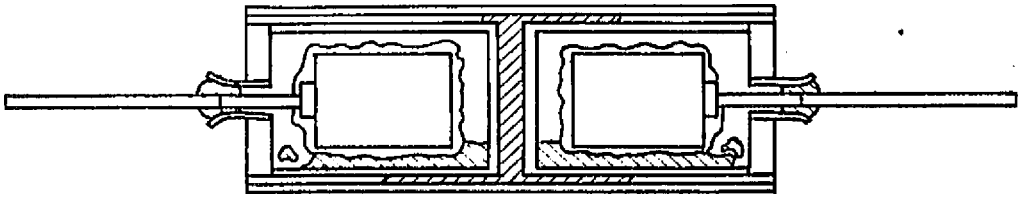

(b) UNACCEPTABLE - SHOWING INTERNAL SOLDER REMELTED AND ALL FLOWED TO ONE SIDE, ALSO LARGE LOOSE SOLDER PARTICLE.

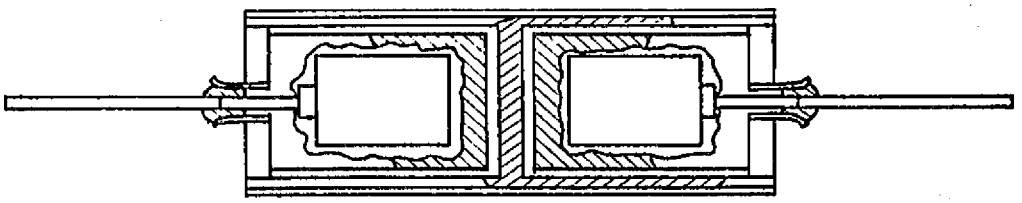

(c) UNACCEPTABLE - SHOWING CONNECTING SOLDER RUNNING ALL THE WAY UP ONE CAN BUT NOT TRAVELING UP THE SIDE OF THE OTHER CAN AT ALL.

Figure E-4. Non-polar solid tantalum capacitor defects

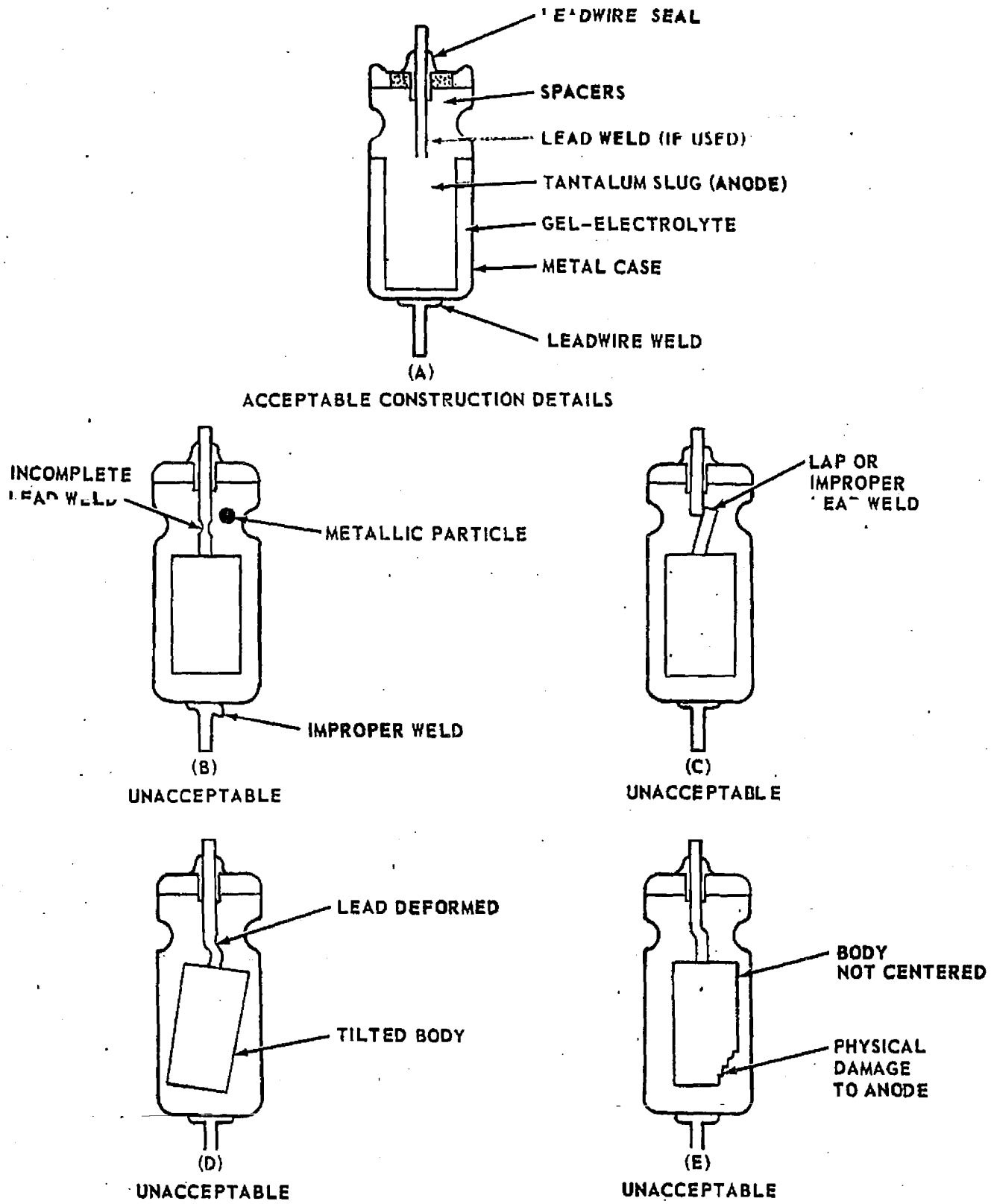

FIGURE E 5 ACCEPTABLE AND UNACCEPTABLE WORKMANSHIP FOR NON-SOLID TANTALUM CAPACITORS

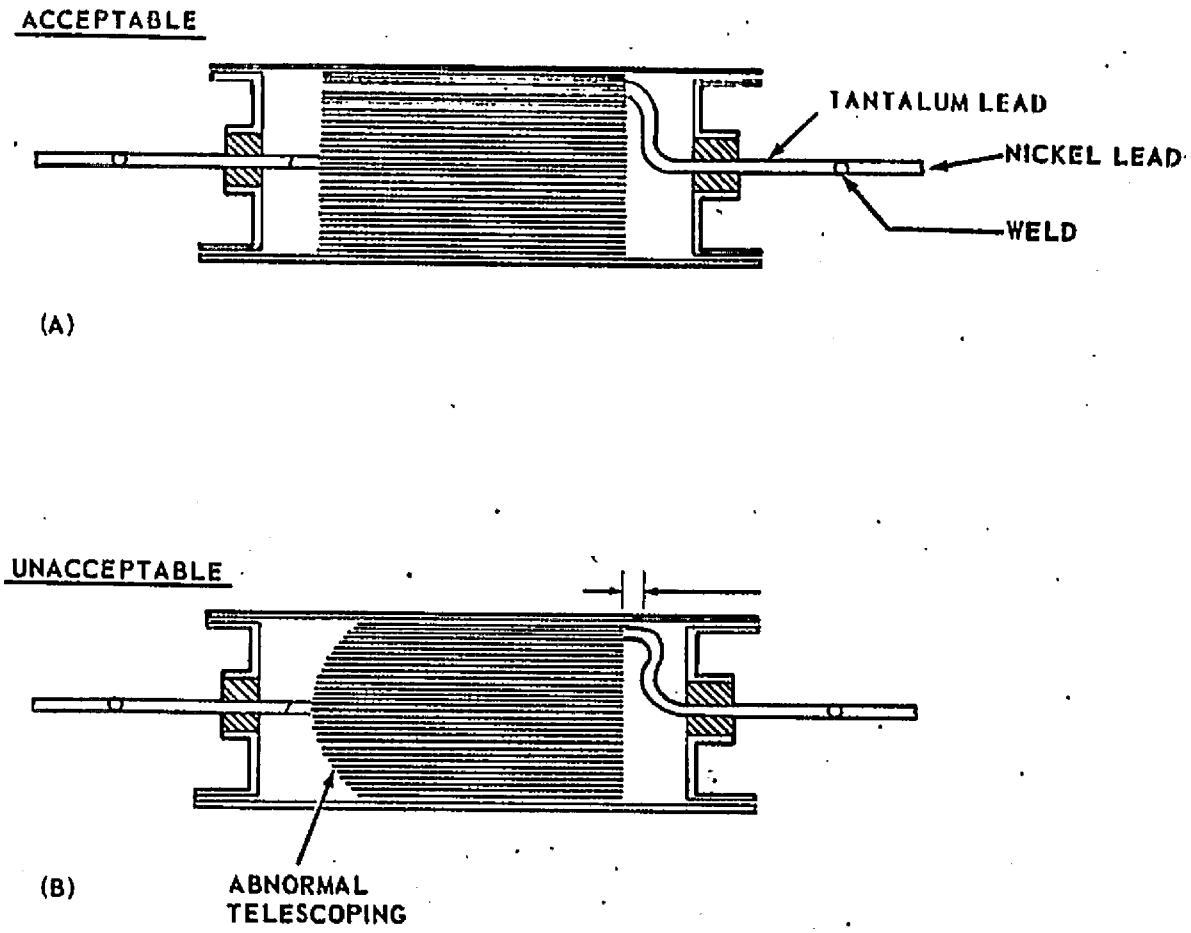

FIGURE E 6 ACCEPTABLE AND UNACCEPTABLE HERMETICALLY SEALED TANTALUM FOIL CAPACITORS

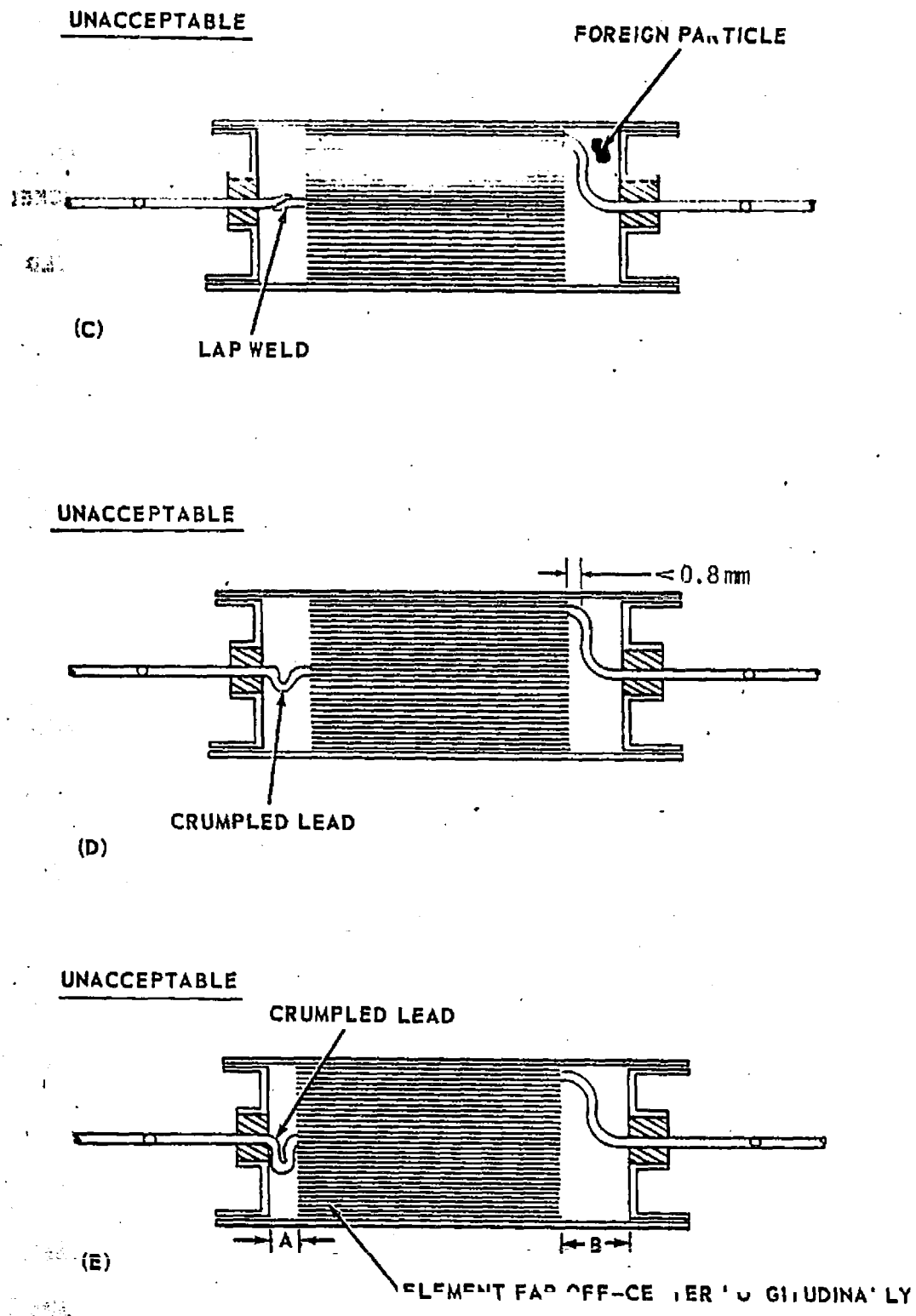

FIGURE E 6 (CONCL)

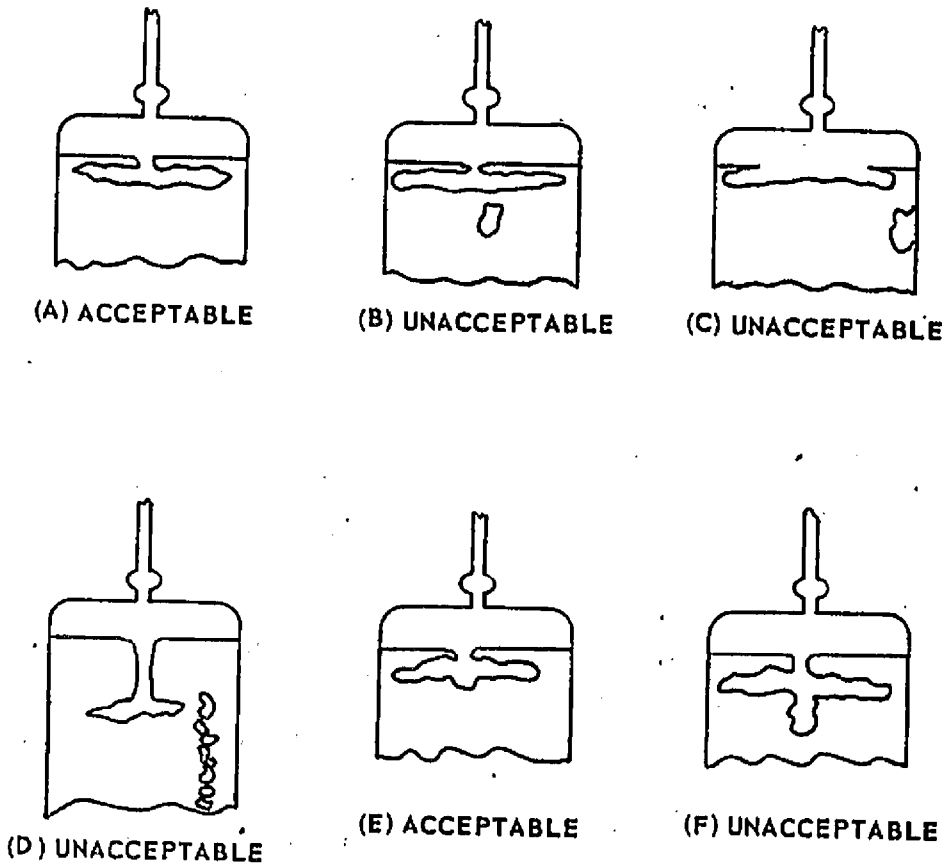

FIGURE E 7 HERMETICALLY SEALED PAPER, PLASTIC, PAPER/PLASTIC CAPACITORS.

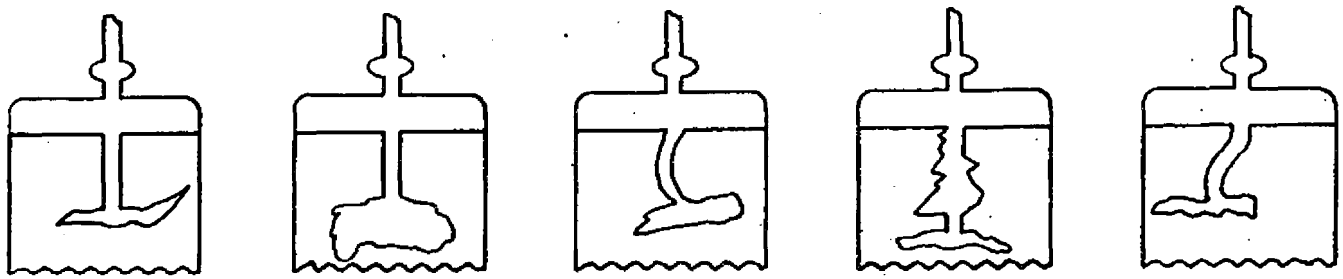

(G) SOLDER SPIKE

(H) EXCESSIVE SOLDER

(I) BENT LEAD

(J) SOLDER RUNOFF FROM TUBELET

(K) MISALIGNMENT

FIGURE E 7 (CONCL) UNACCEPTABLE PAPER, PAPER 'PLASTIC, PLASTIC DIELECTRIC CAPACITORS.

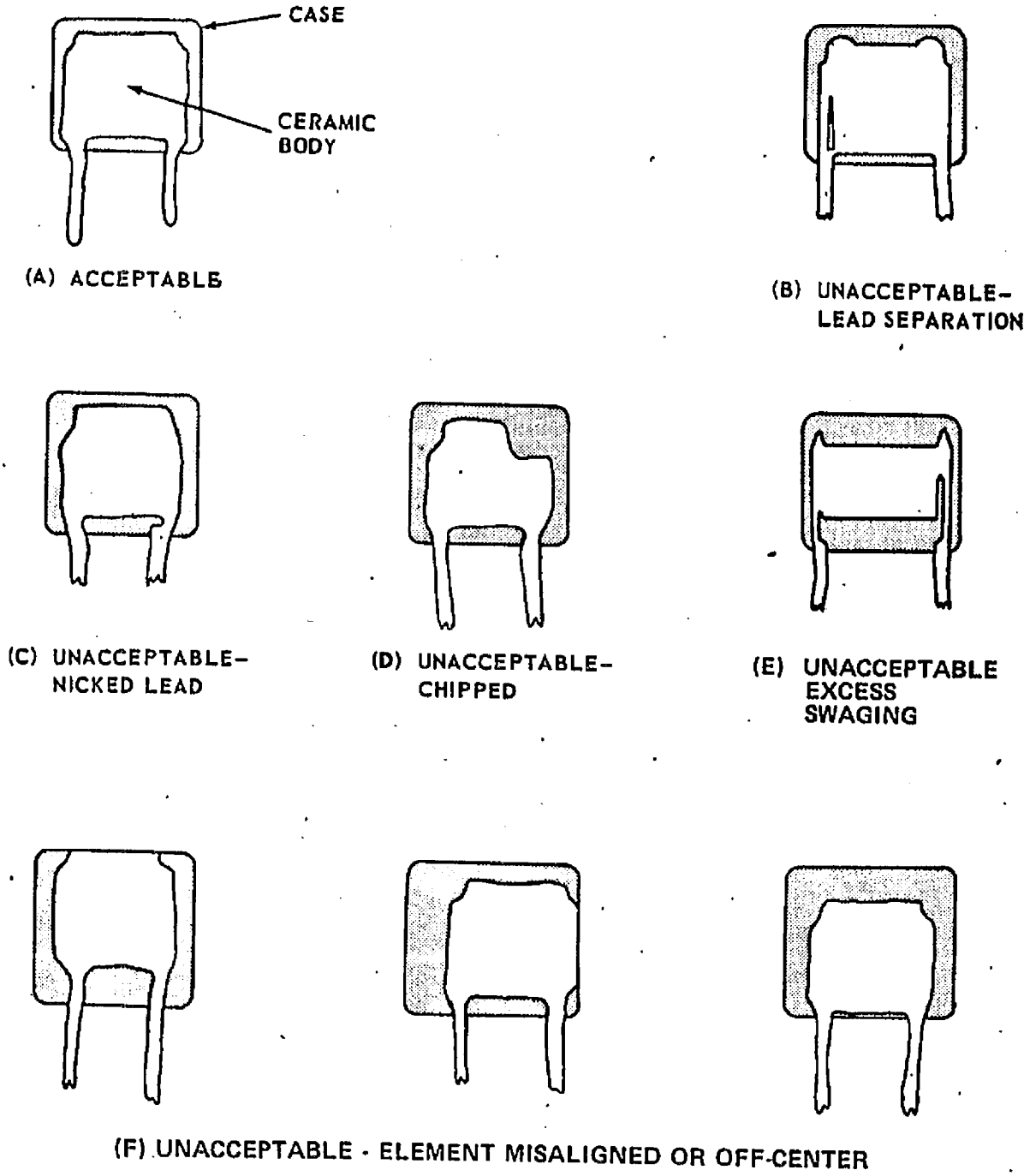

FIGURE E 8 ACCEPTABLE AND UNACCEPTABLE CERAMIC CAPACITORS.

APPENDIX F

RELAYS

10. SCOPE

10.1 This appendix establishes the criteria for acceptance and rejection of relays supplied under the provisions of this standard.

20. REQUIREMENTS

20.1 Views - Three views are required to show defects. These shall be taken through the three main axes of the relays as shown in Figure F-1. When inadequate coverage is provided additional views shall be taken as deemed necessary to satisfy the criteria defined herein.

20.2 Examination - The radiographic examination shall include, but not be limited to, inspection for extraneous material; parts alignment, adjustments, and clearances; and incorrectly performed operations.

20.2.1 Extraneous material - There shall be no visible extraneous material. Loose or excessive bonding material such as weld and solder splash and solder balls shall be considered extraneous material. Welded and soldered joints shall be free of loose weld or solder flash, or attached flash of pedicle or lancet shape. Firmly attached excessive weld or solder flow is acceptable provided it meets the dimensional requirements of Figure F-2(b) and Figure F-3(b). Examples of unacceptable extraneous material contamination are depicted in Figure F-2(a).

20.2.2 Parts clearance, adjustment, and alignment - Acceptable relays shall exhibit adequate internal electrical and mechanical clearances. Criteria for determining adequate clearance by inspection of radiographs shall be established by each manufacturer and must be approved by the qualifying activity, except as specified otherwise herein. The bare end of coil lead wires shall not extend beyond header pins more than 1.60 mm (0.062 inch). Clearances of any electrified moving part from the enclosure shall conform to that specified in Figure F-3(b). Armature and contact moving parts shall be free of interference with wires or other relay parts. Relay parts such as contact springs, bare coil leads, and actuator shall not touch header surface. There shall be no excessive or abnormal air gaps in joints between magnetic core and frame parts such as can result from improper parts alignment. Examples of unacceptable parts clearance, adjustment, and alignment are given in Figure F-3.

20.2.3 Miscellaneous relay defects - Omitted, broken, or deformed parts; incomplete, or incorrectly performed operations are unacceptable. Examples of miscellaneous relay defects are depicted in

Figure F-4. Relays that are designed to have the frame structurally connected to the case shall show no gap between the frame and the dimple or other structure used to connect the case to the frame. Solder shall not protrude (A) more than 3 times the diameter (B) of the vent hole. See Figure F-4(a).

20.2.4 Physical damage - There shall be no cracks, splits, or chips in relay parts.

20.2.5 Getter Replacement Spring - Where applicable, the getter replacement spring alignment shall be in accordance with Figure F-5.

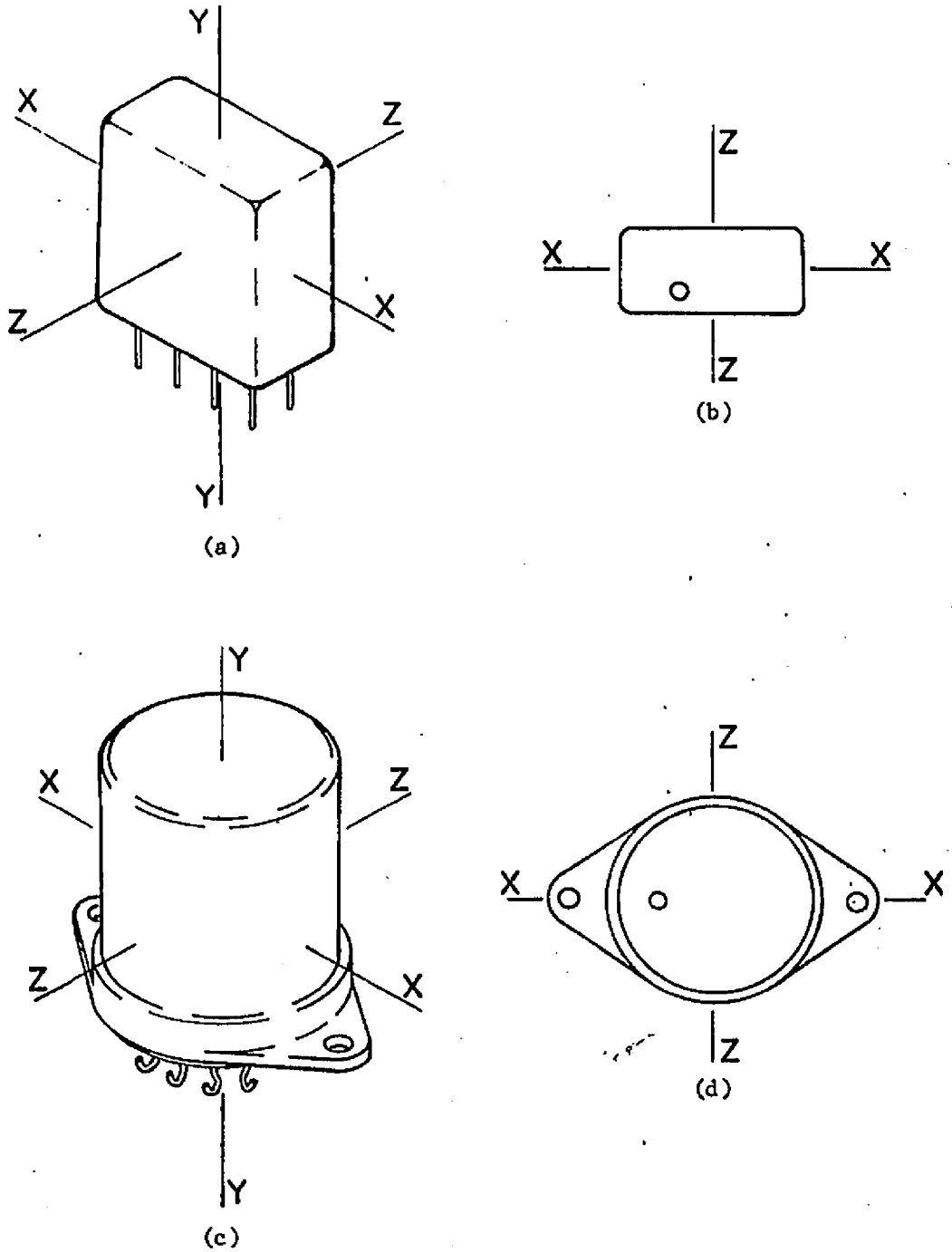

Figure F-1. Relay axes

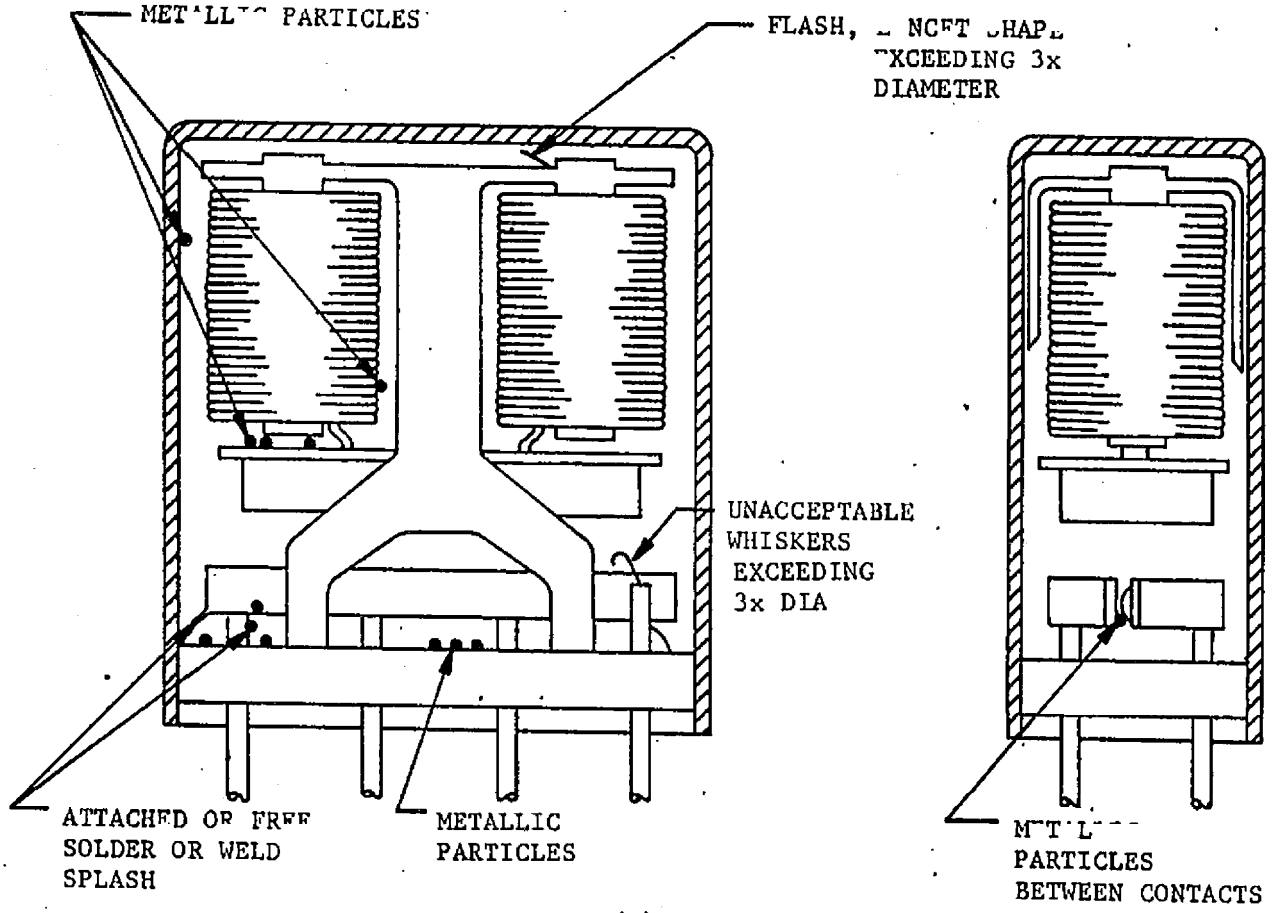

(a)

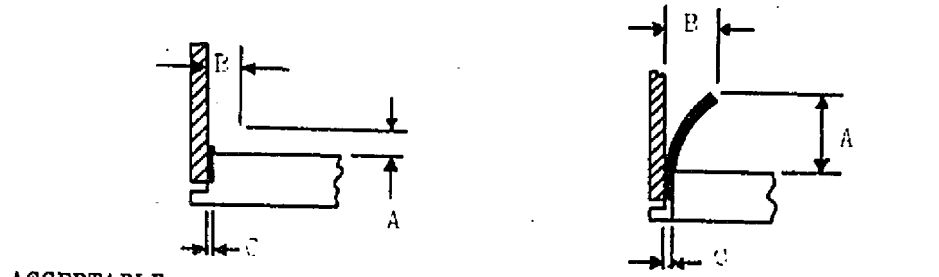

ACCEPTABLE
A, B < 1.6 MM (0.0625 IN.)
C ≥ 0.8 MM (0.0312 IN.)

UNACCEPTABLE
A, B ≥ 1.6 MM (0.0625 IN.)
C < 0.8 MM (0.0312 IN.)

SOLDER OR WELD
METAL EXPULSION

(b)

Figure F-2. Extraneous material and particle contamination

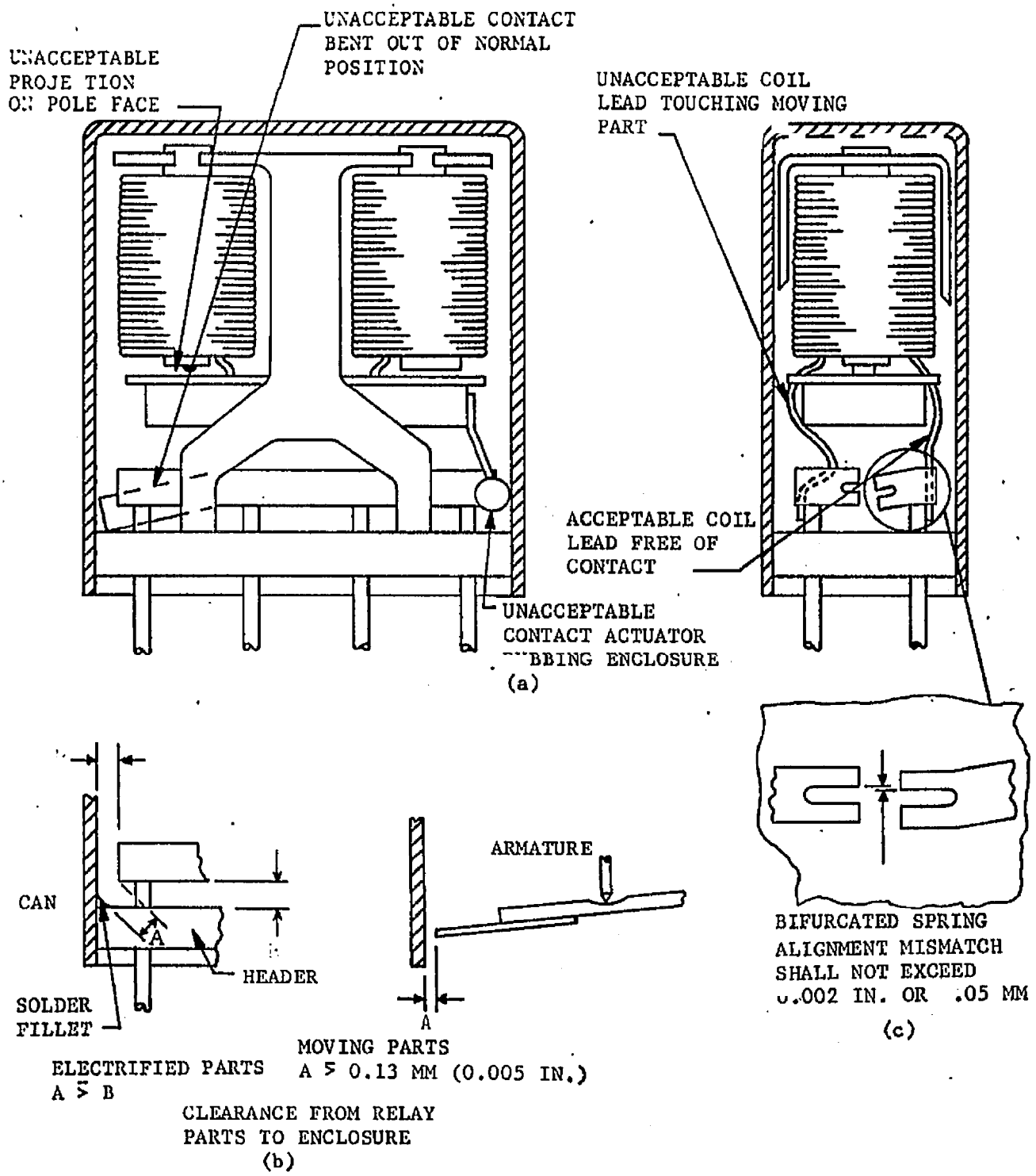

Figure F-3 Parts clearances and adjustments

(a) "SEAL OFF HOLE" CLOSURE

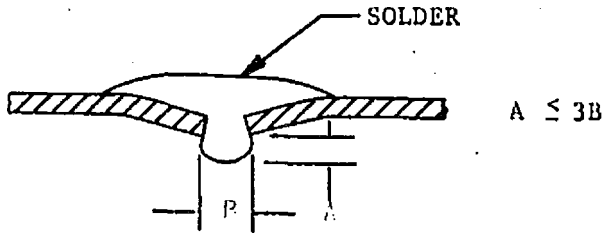

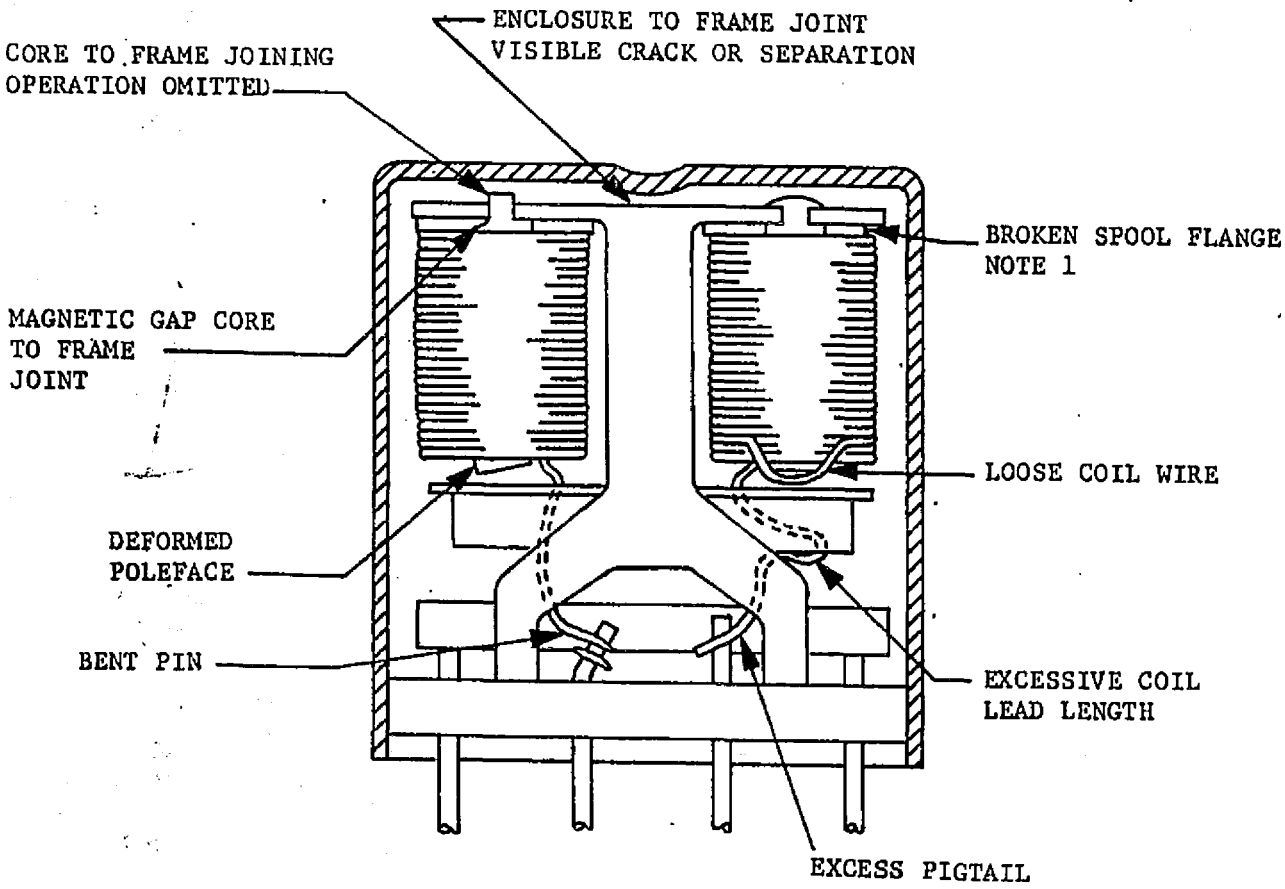

NOTE 1: BROKEN SPOOL FLANGE WOULD NOT NECESSARILY SHOW IN X-RAY.

Figure F-4. Miscellaneous relay defects

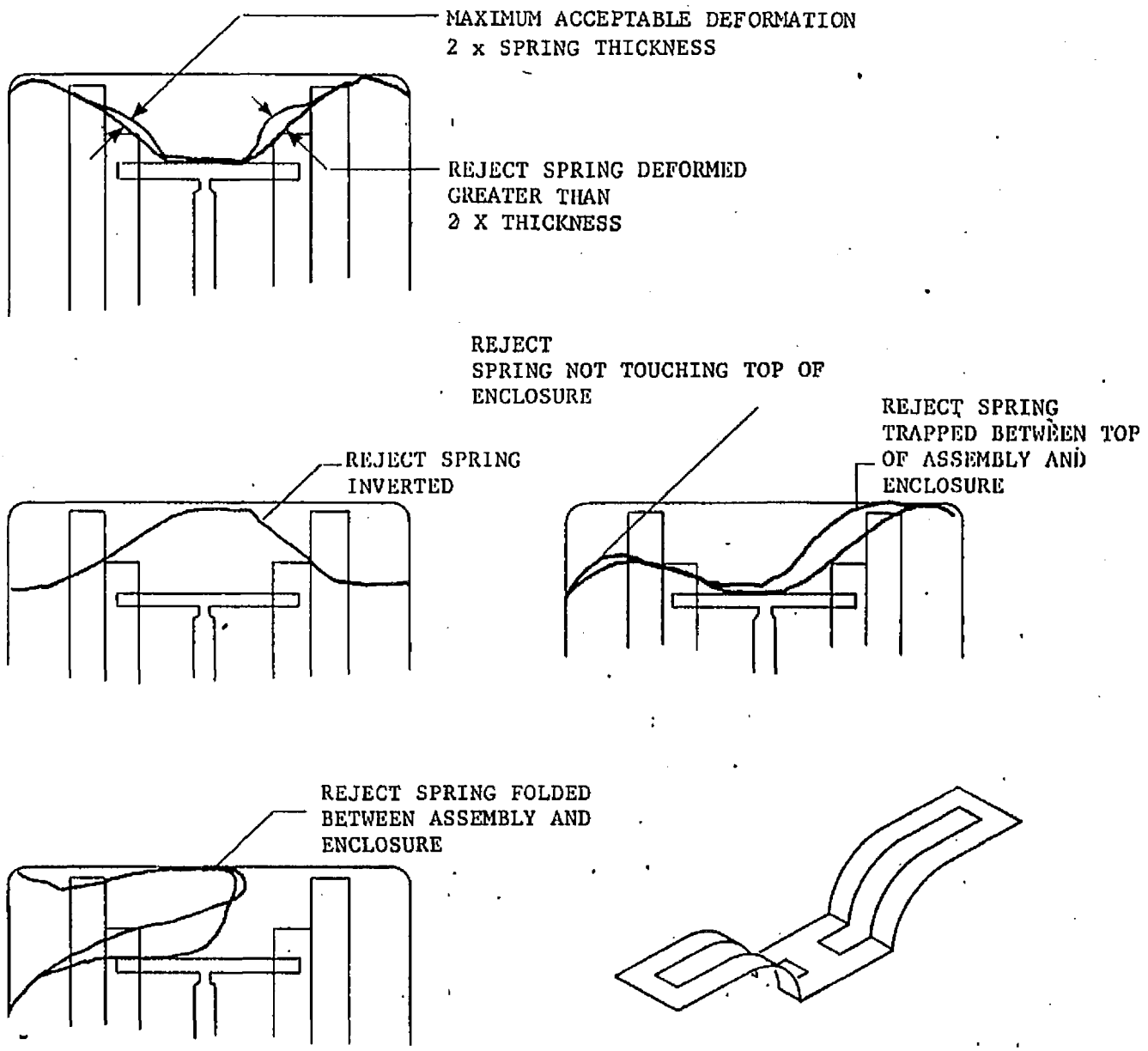

Figure F-5. Getter replacement spring alignment

APPENDIX G

SWITCHES

10. SCOPE

10.1 This appendix establishes the criteria for acceptance and rejection of hermetically sealed switches supplied under the provisions of this standard.

20. REQUIREMENTS

20.1 Views - Radiographs shall be taken of each switch in each of three orientations as follows (See Figure G-1).

20.1.1 One end view (X-axis) with the toggle in any position, with header oriented toward the left side of the radiograph and kerf toward the X-ray source.

20.1.2 One front (top) view (Y-axis) with the toggle in any position, with the kerf oriented toward the left side of the radiograph.

20.1.3 Side views (Z-axis) with the toggle in each position, with the header oriented toward the top of the radiograph and kerf toward the left side. Momentary-on switches shall have the toggle in the rest position, then taped in either ON position.

20.2 Examination - Magnification used in examination of the radiographs shall not be greater than 10X. There shall be no excessive lubricant smears or globules or any foreign particles (See Figure G-2). All internal working parts shall be in proper orientation (See Figures G-3 and G-4) and there shall be no frayed pigtails. Frayed pigtails are defined as one or more strands separated from the main braid. The length of the braided conductor beyond weld bonds shall not exceed 3 times the diameter of round braided conductor or 3 times the thickness of ribbon conductor. Fixed contact pins shall not be bent more than 10 degrees. There shall be no defect which reduces post to sleeve spacing to less than 75 percent of the available spacing; such as a burr on the post, a misaligned post or a particle in the sleeve. (See Figure G-5).

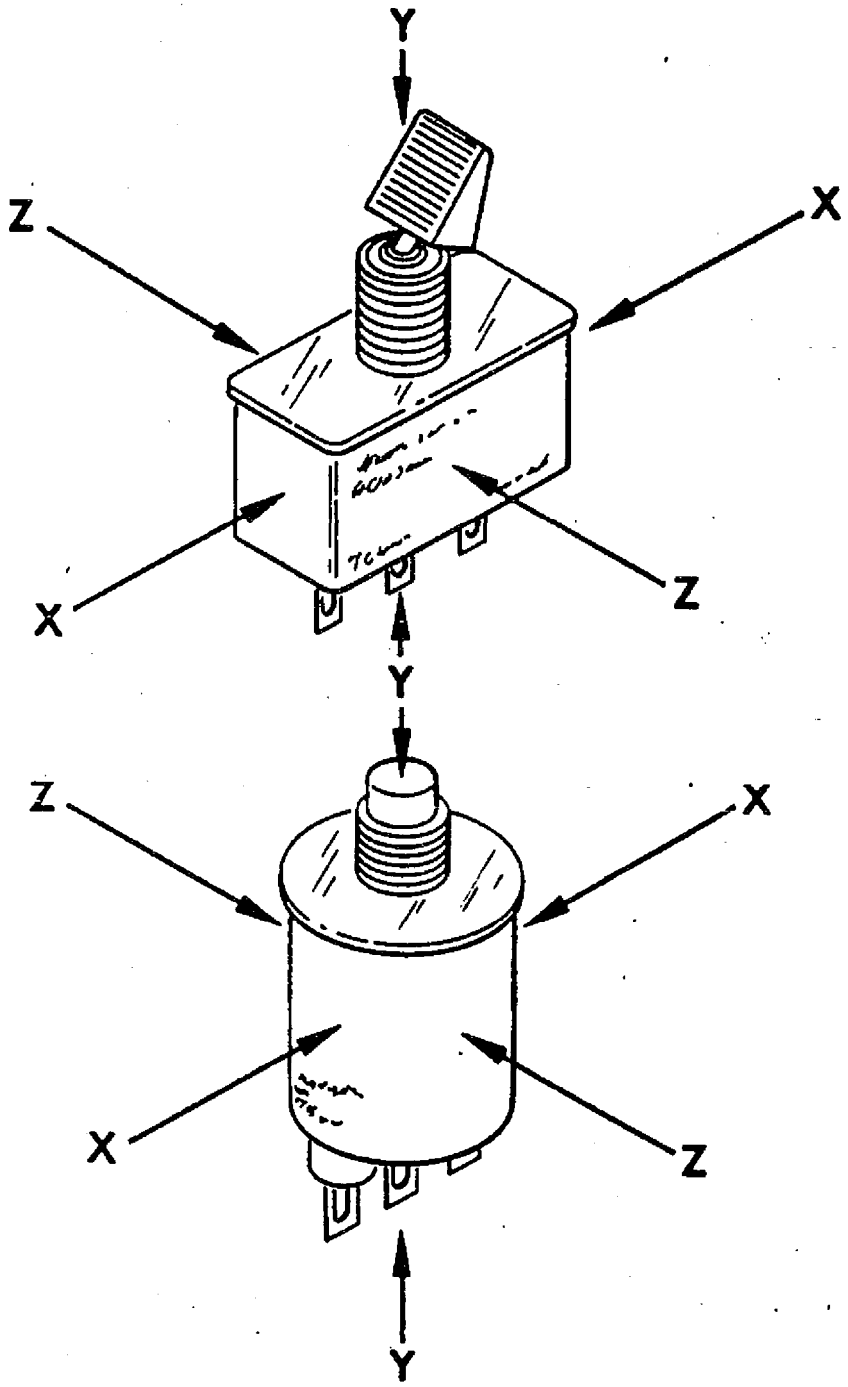

Figure G-1 Switch axes

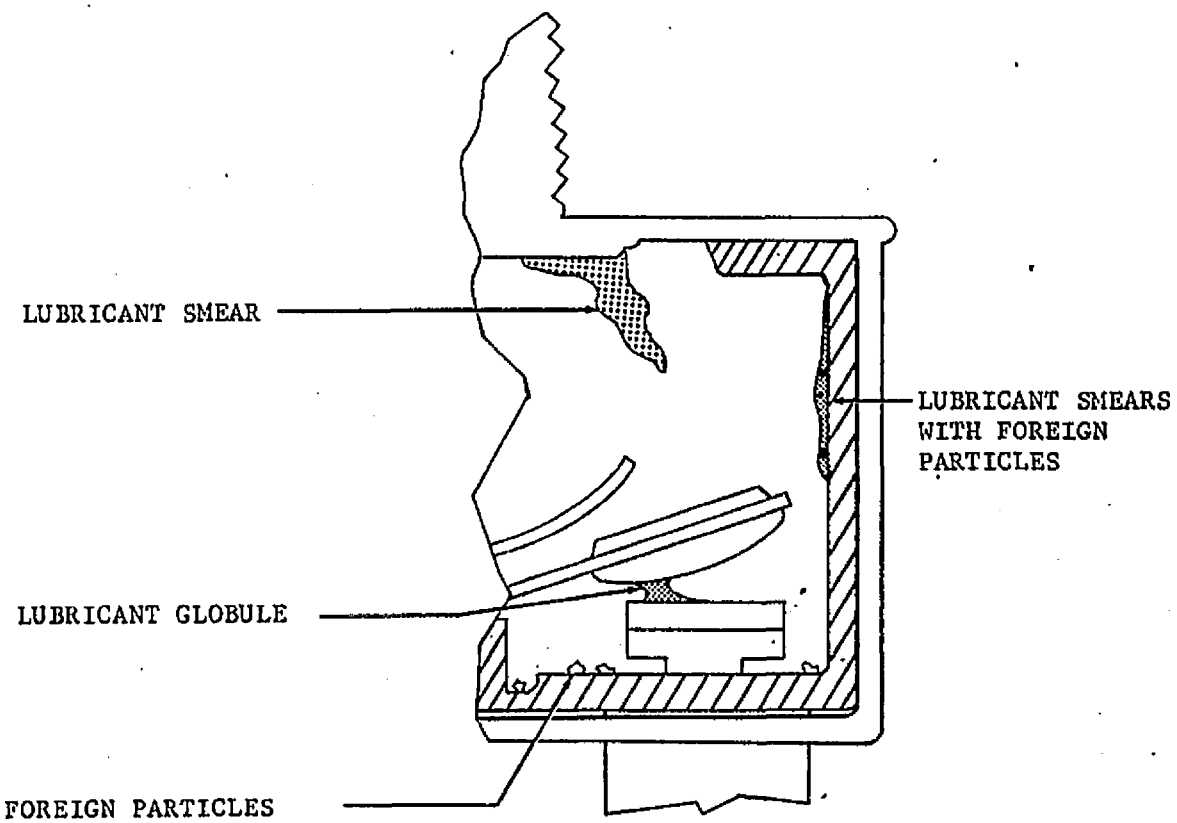

Figure G-2. Extraneous material and particle contamination

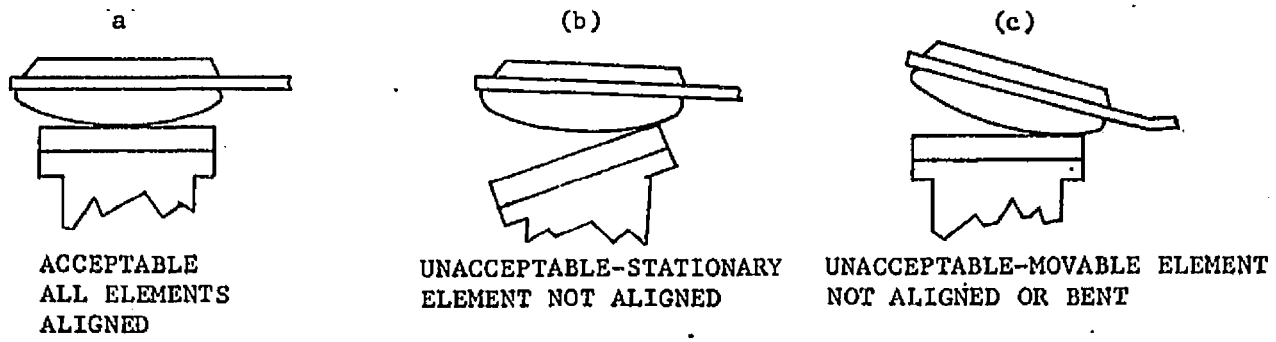

Figure G-3. Acceptable and unacceptable contact element alignment

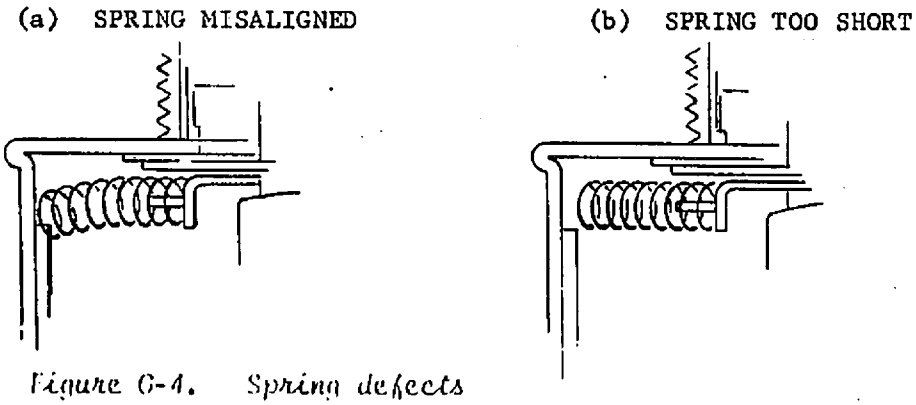

Figure G-4. Spring defects

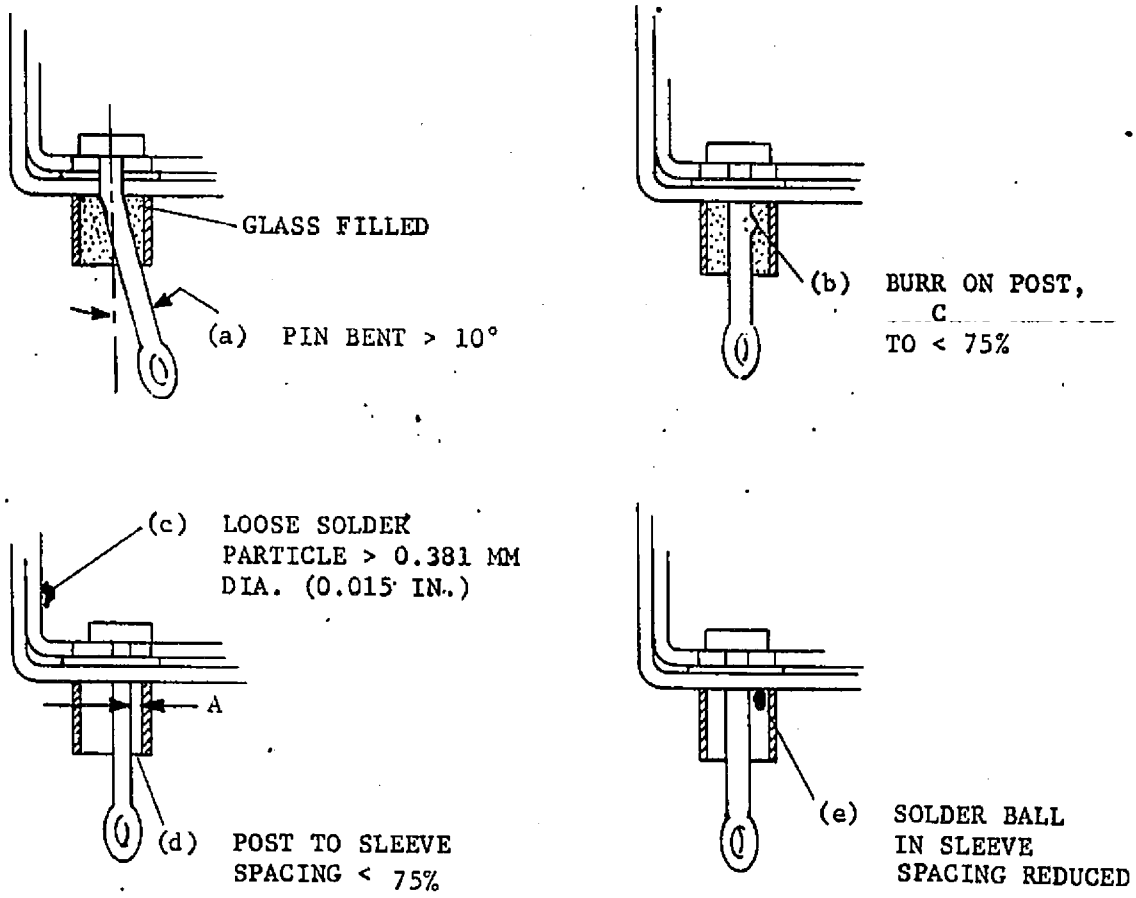

Figure G-5. Fixed contact defects

APPENDIX H

POTTED RFI/EMI FILTERS

10. SCOPE

10.1 This appendix establishes the criteria for acceptance and rejection of potted RFI/EMI filters supplied under the provisions of this standard.

20. REQUIREMENTS

20.1 Views - Two views normal to the major axis of the part shall be taken. One view shall be 90° from the other.

20.2 Examination - The filter examination shall include, but not be limited to, inspection for faulty lead connections, misalignment of internal parts, solder defects, and physical damage of electrical elements. Typical filter construction is shown in Figure H-1.

20.2.1 Extraneous material

(a) There shall be no foreign metallic particle(s) (including solder balls) 0.25mm or 0.010 inch or larger in size. See Figure H-2(a), (d), and (g).

(b) There shall be no solder splash on the winding or the capacitor. See Figure H-2(b) and (d).

(c) There shall be no voids in the solder joint between capacitor and case. See Figure H-2(c).

(d) There shall be no metallic objects bridging the coil to the capacitor nor contact between coil and capacitor. See Figure H-2(e) and (f).

(e) There shall be no solder bridge or metallic objects between the capacitor and the ferrite bead. See Figure H-2(g).

20.2.2 Internal damage - There shall be no nicks, gouges, cracks, or other imperfections in the wire, core, capacitor or other internal elements. See Figure H-2(h), (i) and (j).

20.2.3 Alignment of internal elements - The capacitor element shall be properly seated within its defined location and shall not be tilted or misaligned more than 5° with respect to the case centerline. See Figure H-2(k).

20.2.4 Voids

(a) There shall be no voids or air bubbles in potting material in excess of 2.5 mm (0.100 in.) diameter within 0.25 mm (0.010 in.) of the capacitor or coil.

(b) There shall be no voids or air bubbles between the glass bead terminal and case (leaving leakage path from lead to case).

(c) There shall not be less than 0.25 mm (0.010 in.) of compound or insulation between internal insulated components and the case.

20.2.5 Bonds - There shall be no evidence of improper bonding (such as defective welds) on internal lead connections.

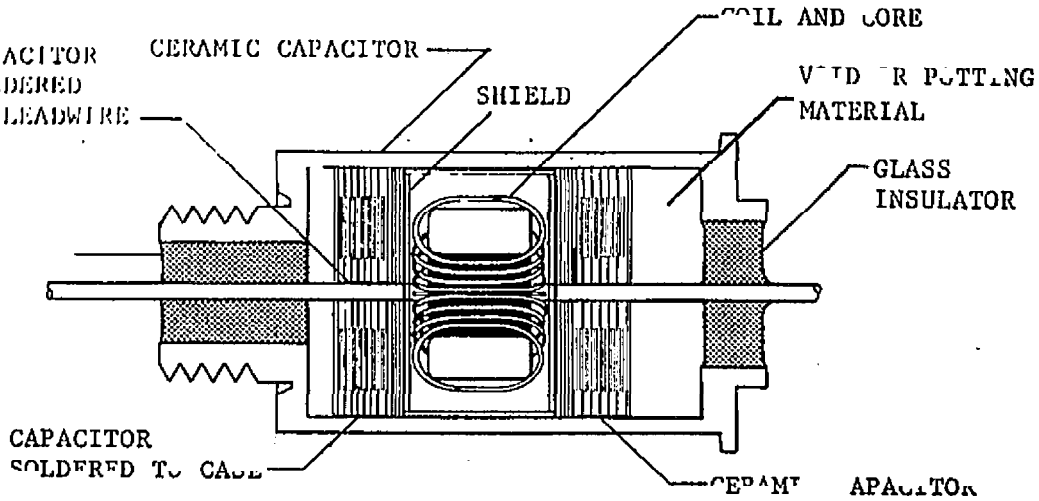

Figure H-1. Typical π filter construction

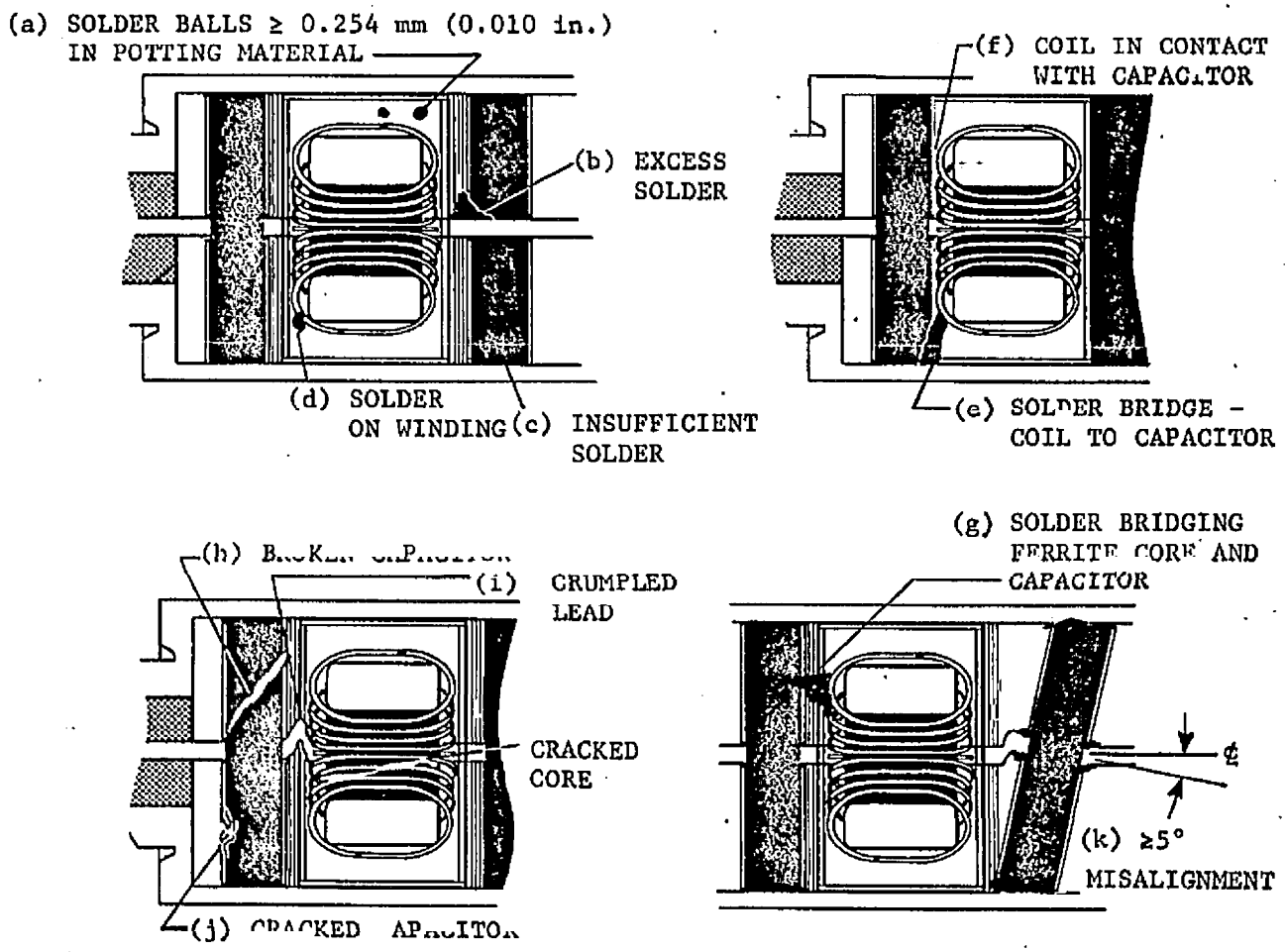

Figure H-2 Unacceptable filter workmanship

APPENDIX I

TRANSFORMERS AND INDUCTORS

10. SCOPE

10.1 This appendix establishes the minimum criteria for acceptance and rejection of hermetically sealed and non-hermetically sealed transformers and inductors supplied under the provisions of this standard. Types other than those specified shall be inspected to the applicable criteria of the nearest type defined herein. Examples of typical construction and terminology are shown in Figure I-1.

20. REQUIREMENTS

20.1 Views - Radiographs shall be taken of each device in each of three axes; X, Y, and Z. When inadequate coverage is provided, additional views shall be taken as deemed necessary to satisfy the criteria defined herein. Axial orientation is shown in Figure I-2.

20.2 Examination - The radiographic examination shall include, but not be limited to, inspection for extraneous materials, alignment, clearances and processing damage.

20.2.1 Extraneous material - There shall be no visible extraneous materials that can cause damage to insulation or electrical short circuit between conductors or connections. Loose or excessive bonding material such as weld or solder splash, solder balls and short lengths of unattached wire shall be considered extraneous material. See Figures I-3 and I-6.

20.2.2 Alignment and clearances - Acceptable parts shall exhibit adequate internal electrical and mechanical clearances. Criteria for determining adequate clearance by inspection of radiographs shall be established by each manufacturer and must be approved by the qualifying activity, except as specified otherwise herein. Unacceptable alignment and clearances include the following:

(a) Insufficient clearance between wires and metallic case, other conductive support, or external surfaces. See Figure I-4(a), (c), (d) and (e).

(b) Lead wire under tension that can be subjected to further stress under thermal expansion. See Figure I-4(f).

(c) Inadequate clearance of wires and installation holes, wherein the wires can be damaged in installation.

(d) Inadequate clearance between adjacent terminals due to pigtails of the wires, or wire alignment.

(e) Inadequate clearance between wires. See Figure I-4(b).

20.2.3 Processing damage - Unacceptable processing includes the following:

(a) Raveled or frayed wire ends that can separate or pierce insulation, other wires or parts. See Figures I-5(a) and I-6 (a).

(b) Partially broken wire strands. Multiple strand wire in which one or more strands have separated. See Figure I-5(b).

(c) Missing or incomplete soldering or welding of connections. See Figures I-5(c) and I-6(d).

(d) Excess lengths of wires that are unsupported and can move freely under mechanical or thermal stress. See Figure I-5 (d).

(e) Unauthorized splices or repair of broken wires or terminals. See Figures I-5(e) and I-6(c).

(f) Voids in encapsulant in contact with the lead between the coil and external surface that completely surround the wire or, although not surrounding the wire, extend greater than 20% of the distance from the coil to the external surface. See Figure I-5(f) and (g).

20.2.4 Miscellaneous - Cracked, broken or improperly assembled core, deformed or bent parts, and voids in the seal shall be cause to reject a part.

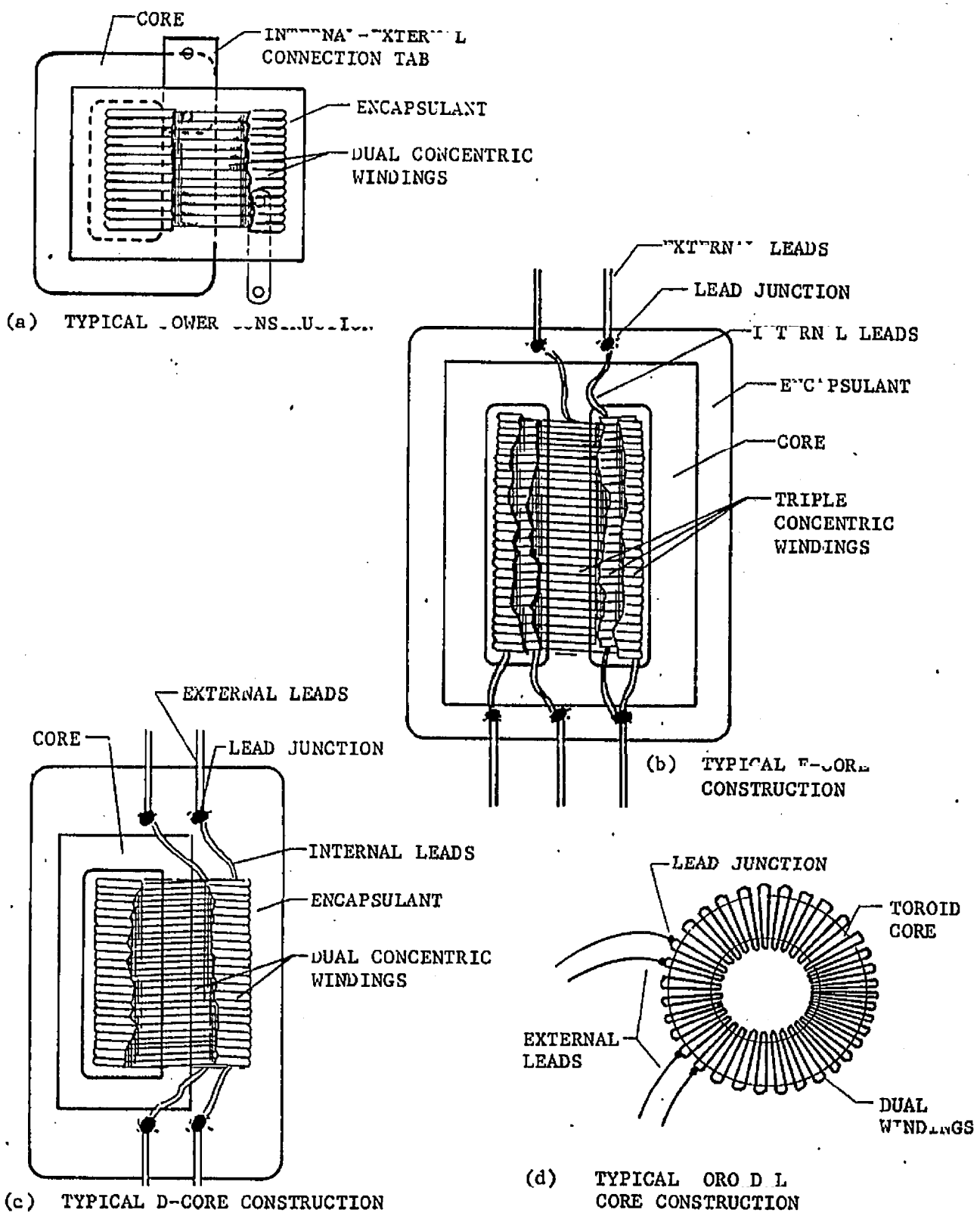

Figure I-1. Typical transformer/inductor construction

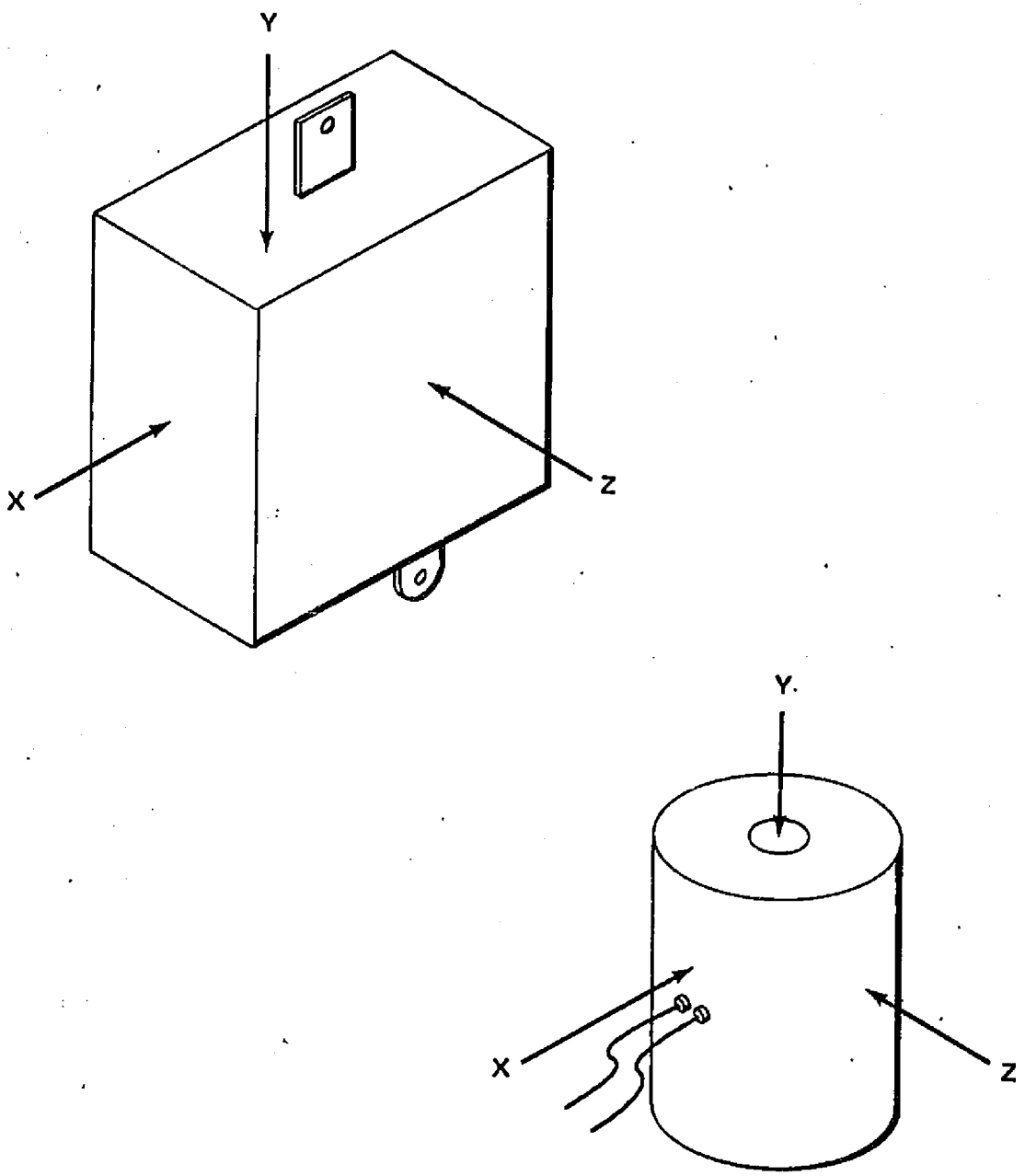

Figure I-2 Axial Orientation

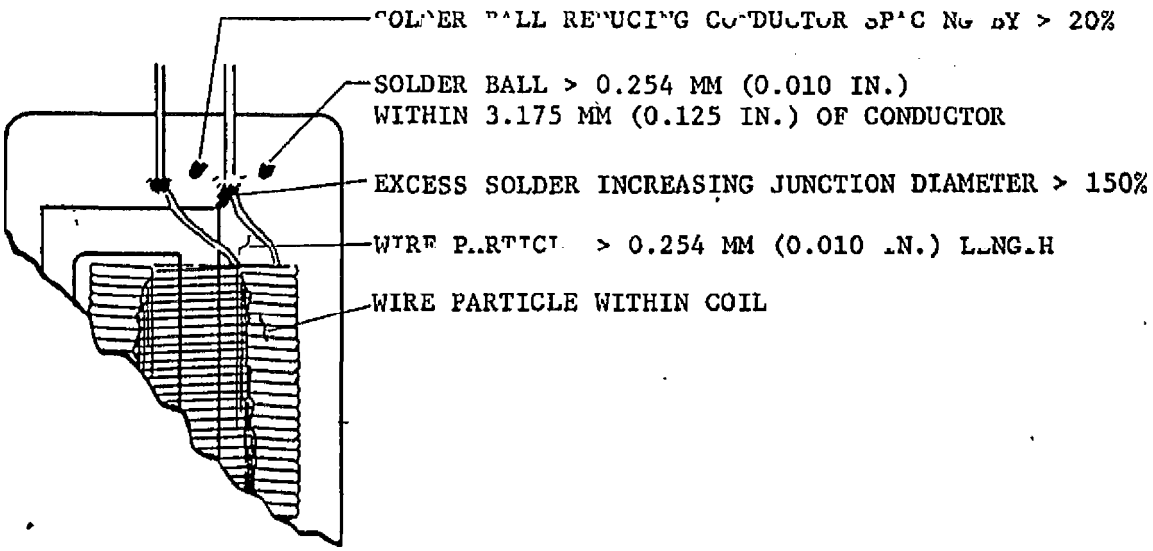

Figure I-3. Unacceptable extraneous material

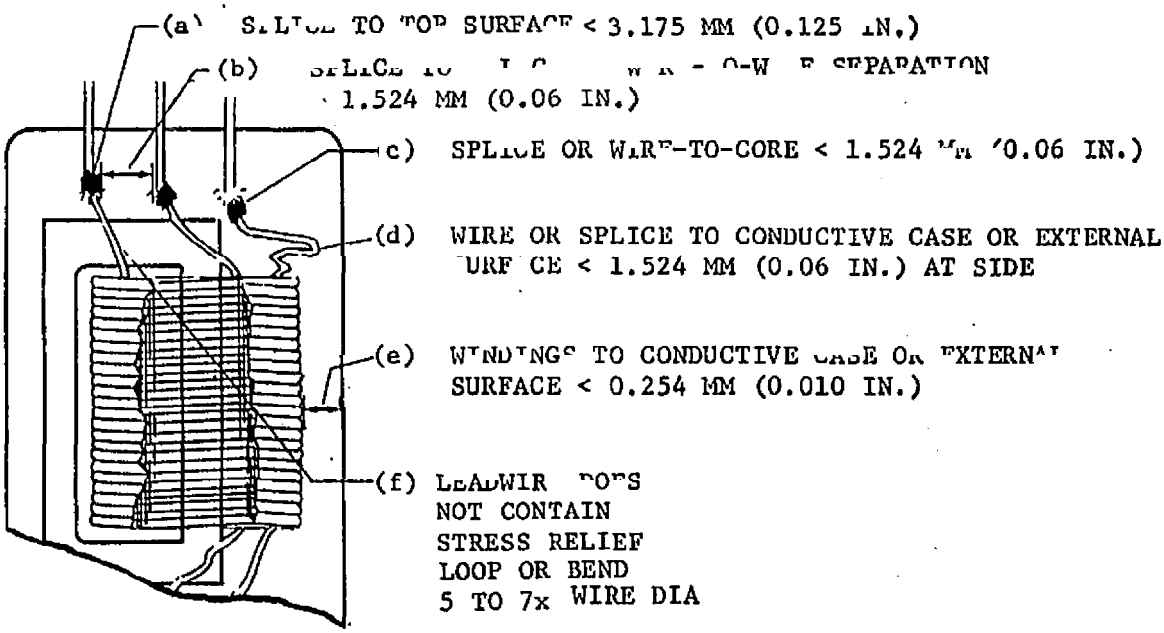

Figure I-4. Unacceptable alignment and clearances

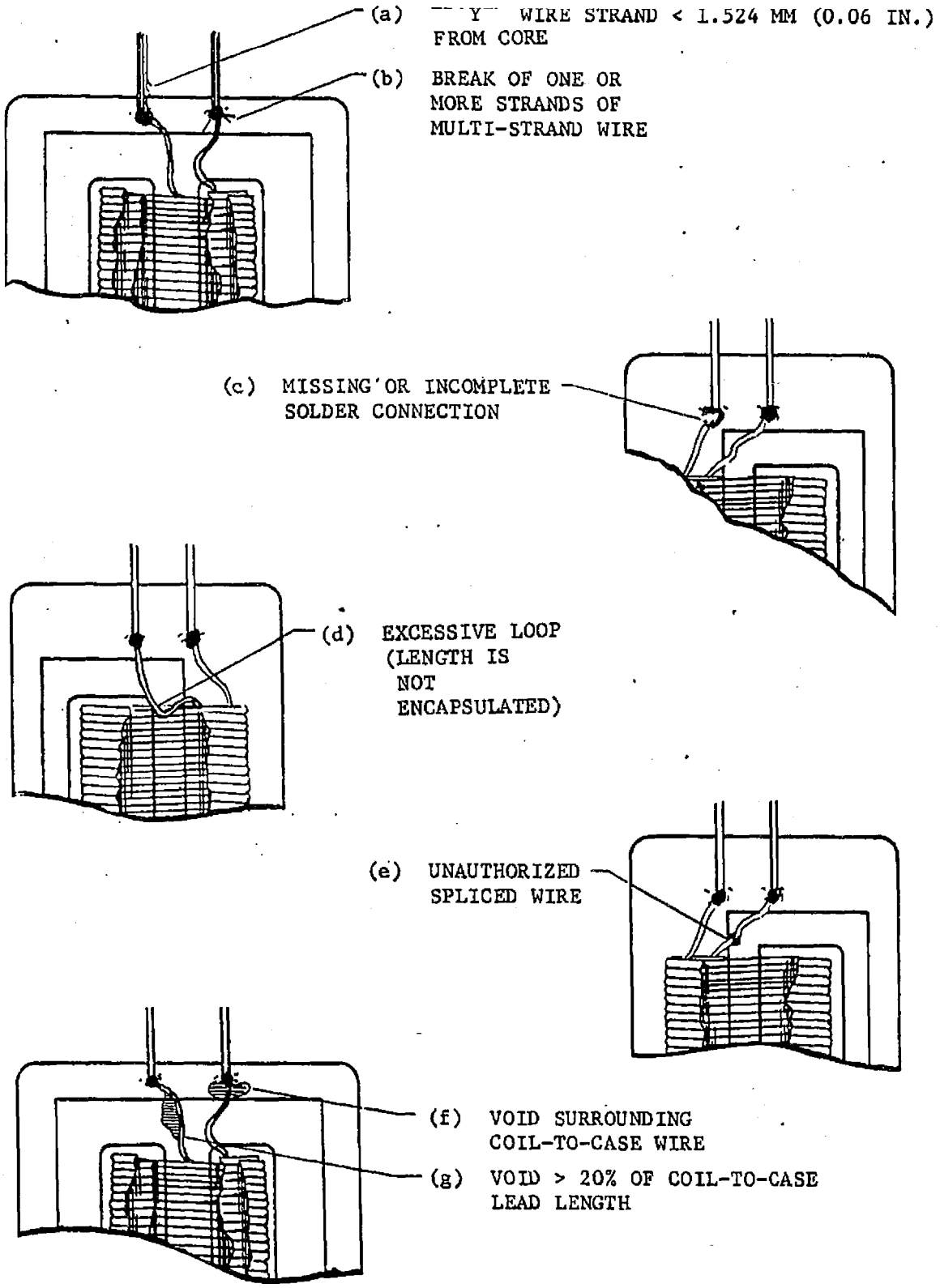

Figure I-5. Unacceptable processing

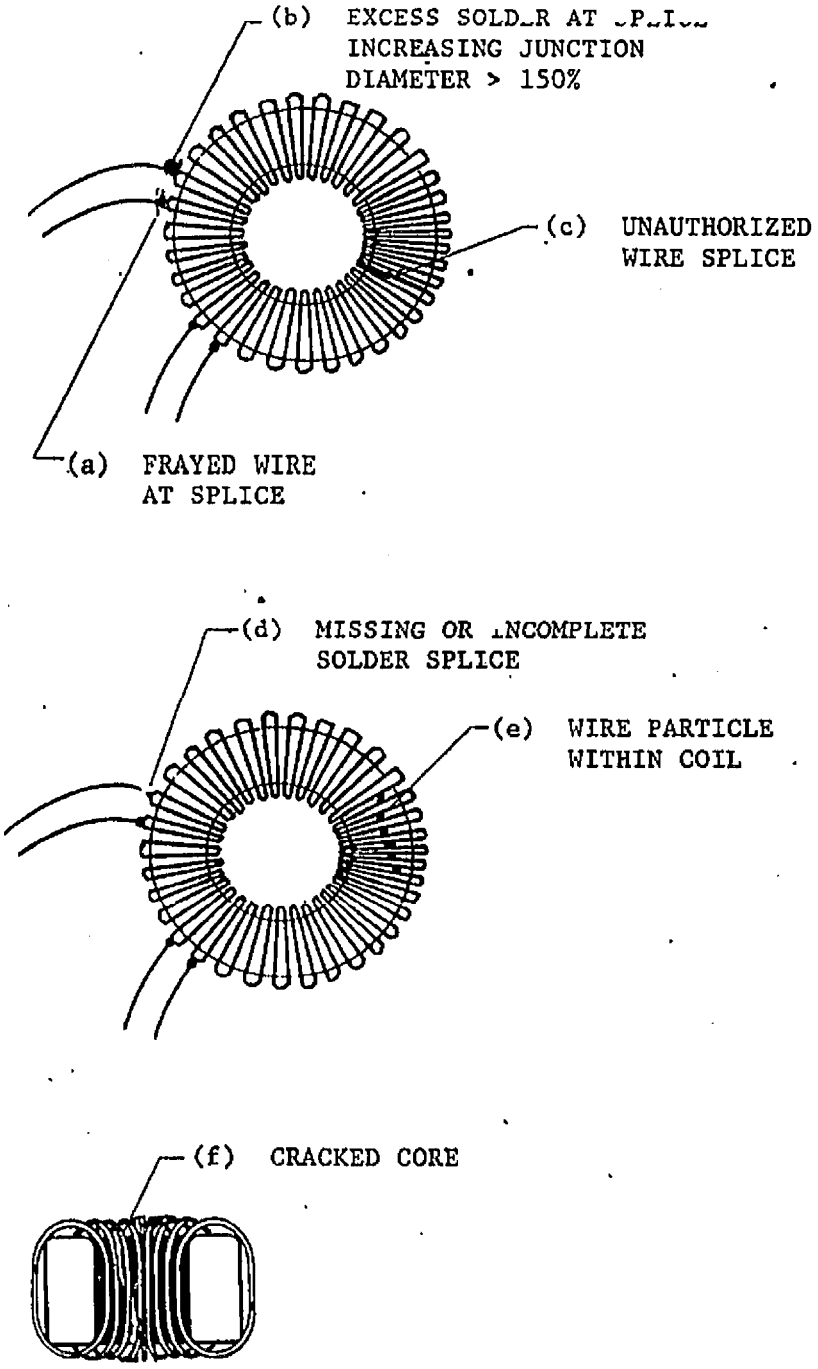

Figure I-6. Unacceptable processing damage-toroidal core

APPENDIX J

THERMISTORS

10. SCOPE

10.1 This appendix establishes the minimum criteria for acceptance and rejection of thermistors supplied under the provisions of this standard.

20. REQUIREMENTS

20.1 Views - Radiographs shall be taken of each thermistor in the X and Y axes. When inadequate coverage is provided, additional views shall be taken as deemed necessary to satisfy the criteria defined herein.

20.2 Examination - The radiographic examination shall include, but not be limited to, inspection for extraneous materials, parts alignment, clearances, proper bonds, and general workmanship. Specific detailed criteria will be dependent upon the configuration of the part type selected.

APPENDIX K

HYBRID INTEGRATED CIRCUITS

10. SCOPE

10.1 This appendix establishes the criteria for acceptance and rejection of hybrid integrated circuits supplied under the provisions of this standard.

20. REQUIREMENTS

20.1 Views - Three views shall be taken. One view shall be taken with the X-rays penetrating the case normal to the plane of the substrate. A second view shall be taken with the X-rays penetrating a side. The third X-ray shall penetrate a side rotated 90 degrees from the side of the second view.

20.2 Examination - The radiographic examination shall include, but not be limited to, inspection for extraneous material, solder or weld splash, proper lead alignment, uniform semiconductor element and substrate bonding, and sufficient seal area.

20.2.1 External lead alignment - The metal and glass type package shall have all leads centrally located in the glass windows. A lead within one lead wire radius of the metal package shall be cause for rejection. Ceramic packages with ribbon leads shall be rejected if any 2 leads have less than one lead width separation. See views (a) and (b) of Figure K-1.

20.2.2 Internal lead wire - No ball bond shall be within 0.0254 mm (0.001 in.) of another ball bond. No portion of a lead wire, shall be within four wire diameters of another lead wire nor shall any portion of the lead wire be within 0.1016 mm (0.004 in.) of the case. See views (c) and (d) of Figure K-1.

20.2.3 Extraneous material - There shall be no visible extraneous material. Loose or excessive bonding material, weld or solder splash, and wire particles shall be considered extraneous materials, also lead wire ends extending greater than three wire diameters beyond a bonding point.

20.2.2.1 Excessive bonding material - Semiconductor die bonding material shall be considered excessive if the thickness at the edge of the die exceeds the height of the top of the element. Material not touching the die shall be considered excessive if the thickness exceeds twice the die height, or is of the form shown in Figure K-1(e).

20.2.4 Unacceptable construction - Unacceptable construction shall include, but not be limited to, the following:

20.2.4.1 Chip attach voids - Contact area voids in excess of 25 percent of the area under the chip bond area or a single void extending the full length or width of the chip element bonding area. See view (f) of Figure K-1.

20.2.4.2 Extraneous wire bonds - A wire bond on a semiconductor die or substrate pad, not a portion of an interconnecting wire (rebond) shall be considered extraneous. See view (g) of Figure K-1.

20.2.4.3 Extraneous wires - A wire bond at one or both ends, not required in the function of the circuit and not a designed test point shall be considered extraneous. See view (g) of Figure K-1.

20.2.3.4 Substrate attach voids - Contact area voids in excess of 50 percent of the area under the substrate or a single void extending the full length or width of the substrate. See view (h) of Figure K-1.

20.2.4.5 Incomplete lid seal - Lid seal area in which solder covers less than 75 percent of the thickness of the wall. See view (i) of Figure K-1.

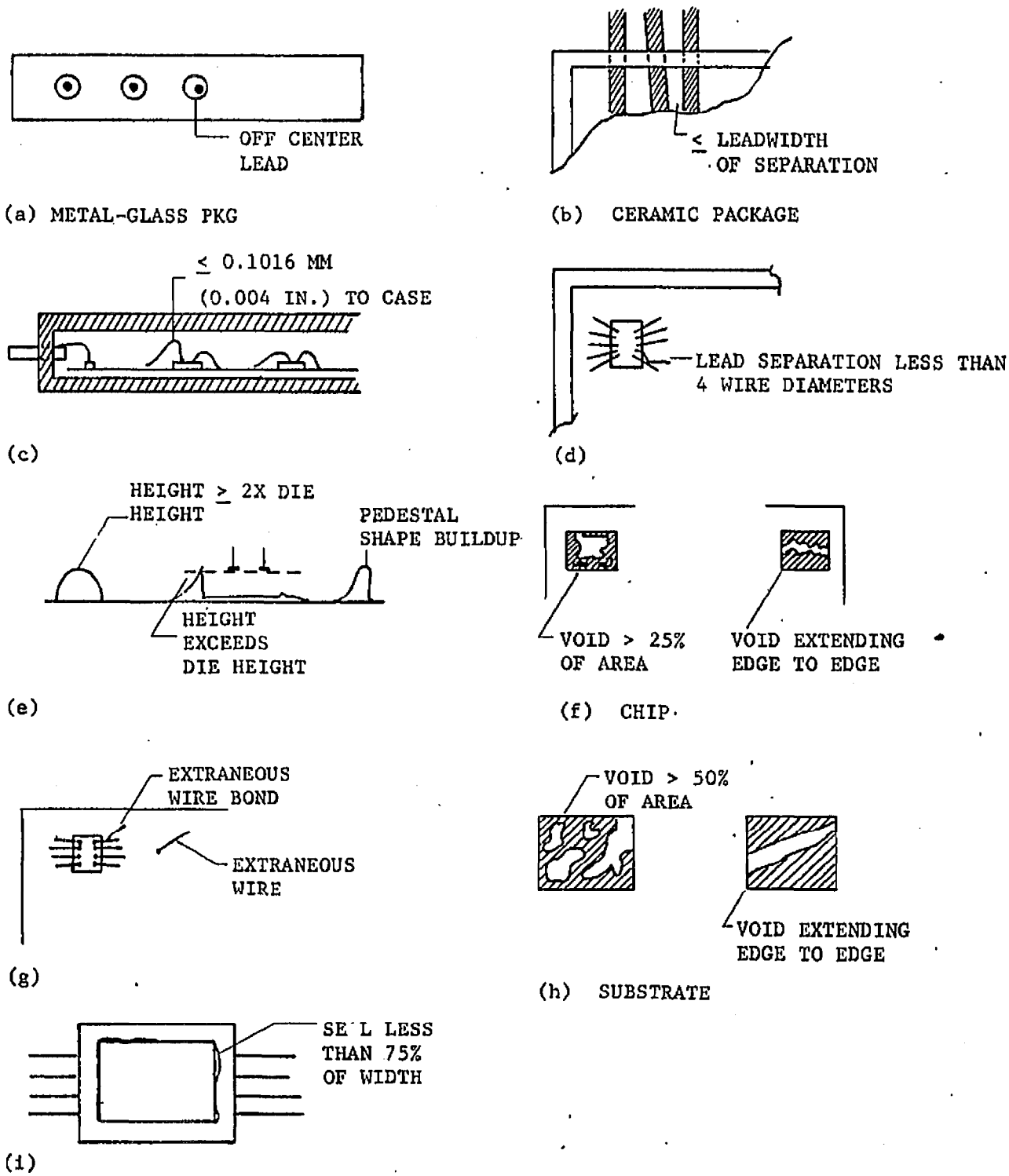

Figure K-1. Unacceptable workmanship for hybrid integrated circuits

APPENDIX L

CIRCUIT BREAKERS

10. SCOPE

10.1 This appendix establishes the criteria for acceptance and rejection of circuit breakers supplied under the provisions of this standard.

20. REQUIREMENTS

20.1 Views - Radiographs shall be taken of each device in the X and Z axes, shown in Figure L-1, as follows:

20.1.1 Side views (X axis) with the breaker in the open and closed positions, with the locating pin or lug on the left.

20.1.2 Edge view (Z axis) with the breaker in either position.

20.2 Examination - The radiographic examination shall include, but not be limited to inspection for extraneous material, improper or incomplete bonds, misaligned or bent elements, inadequate clearances, improper wire terminations and incomplete assembly.

20.2.1 Extraneous material - Extraneous material shall include loose or excessive bonding material such as weld and solder splash, wire trimmings and other metallic particles. Attached bonding material is acceptable provided it meets the dimensional requirements of Figure L-2(a). Examples of unacceptable extraneous material are shown in Figure L-2(b).

20.2.2 Improper or incomplete bonds - Improper or incomplete bonds shall include the following: a) absence of bond evidence where required by design, b) wire attached at a point not specified in design nor common to the lot, and c) surfaces (as shown in Figure L-3) attached in only a portion of the intended area.

20.2.3 Misaligned or bent elements - Movable contacts misaligned to the extent that allows the effective contact area to be less than 90 percent of the total contact pad (X axis) are unacceptable. See Figure L-4(a). No internal elements shall be bent more than 15° from the designed configuration. See Figure L-4(b).

20.2.4 Inadequate clearance - The minimum clearance between pigtails and the case or other electrically conductive elements shall be 1.6 mm or 0.062 inch. See Figure L-5(a). In addition, all wires shall have adequate clearance to avoid contact with moving parts. See Figure L-5(b).

20.2.5 Incomplete assembly - Incomplete assembly inspection criteria shall include screws and pins not fully inserted and seal areas containing voids.

20.2.6 Physical damage - There shall be no visible cracks or fractures of the case material or any internal elements.

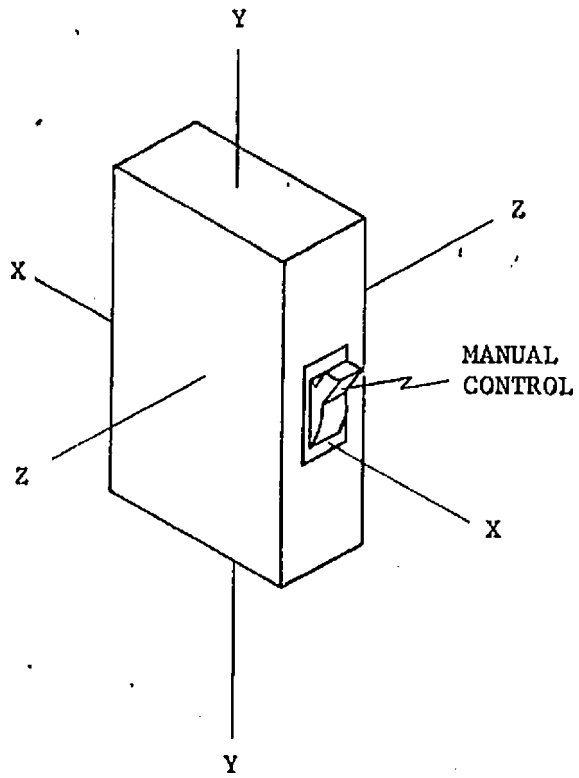

(a) MANUAL RESET

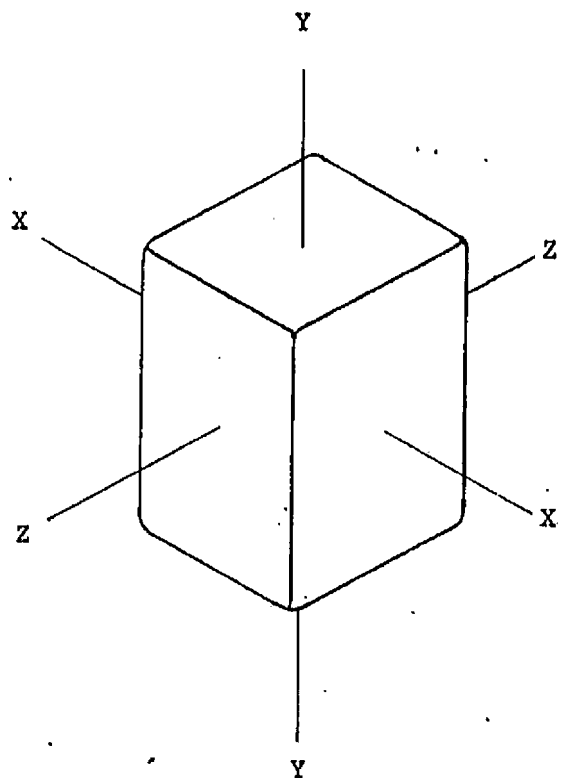

(b) ELECTRICAL RESET

Figure L-1. Circuit breaker axes

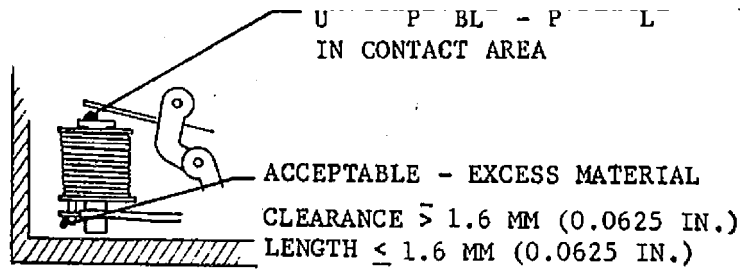

(a)

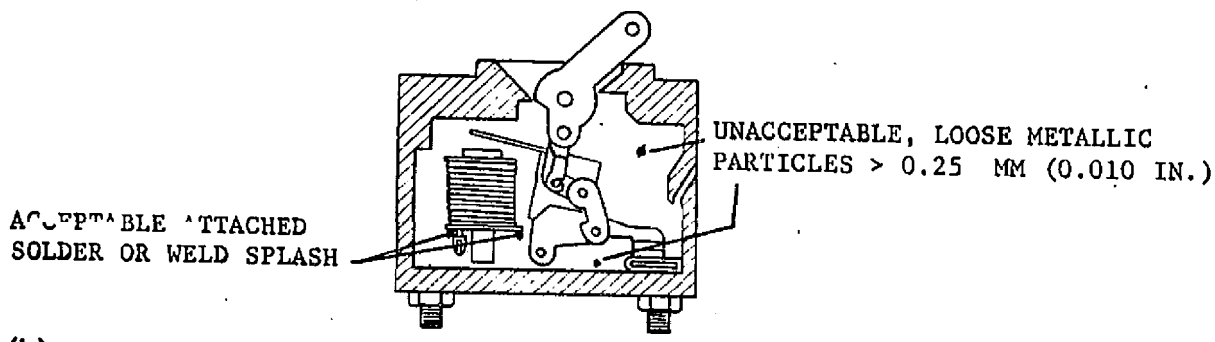

(b)

Figure L-2. Extraneous material

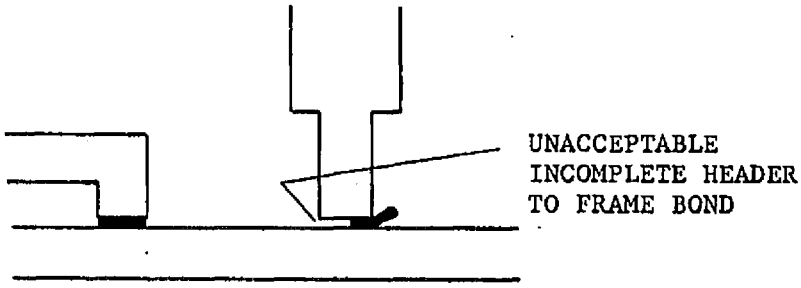

Figure L-3. Improper/incomplete bonding

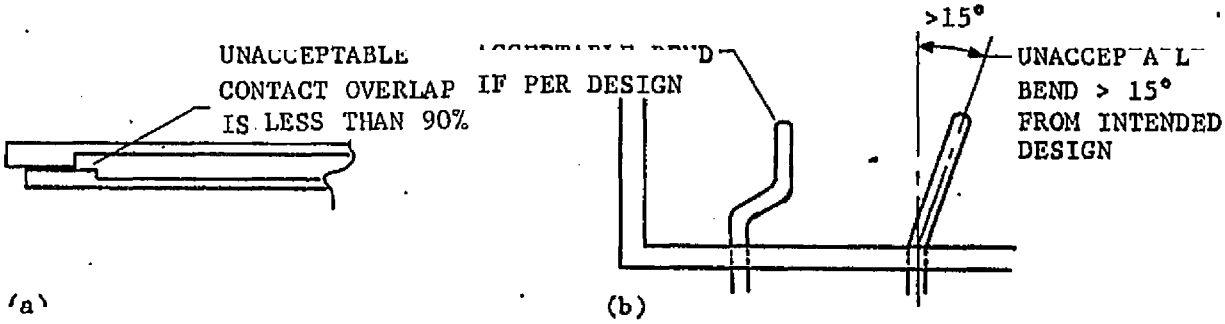

Figure L-4. Misaligned or bent elements

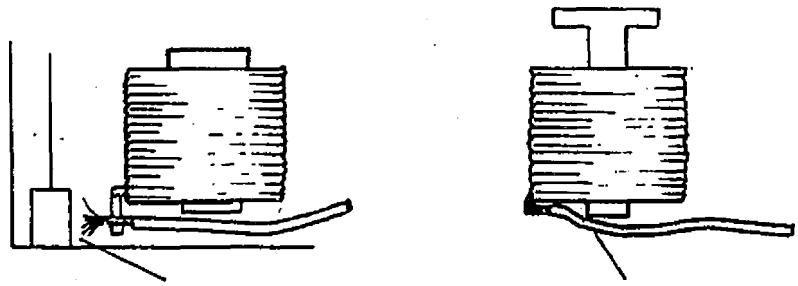

UNACCEPTABLE CLEARANCE IS LESS THAN 1.6 mm (0.0625 in.) AND WIRE HAS FRAYED END

(a)

UNACCEPTABLE INADEQUATE CLEARANCE BETWEEN WIRE & MOVABLE CORE

(b)

Figure L-5. Inadequate clearance

APPENDIX M

CRYSTALS

10. SCOPE

10.1 This appendix establishes the minimum criteria for acceptance and rejection of crystals supplied under the provisions of this standard.

20. REQUIREMENTS

20.1 Views - A minimum of two views shall be taken, one normal to the plane passing through the crystal leads and one at 90 degrees from the first. When two views provide inadequate coverage, additional views as deemed necessary by the testing laboratory or by the procuring activity representative shall be required.

20.2 Examination - The radiographic examination shall include, but not be limited to, inspection for extraneous material within the enclosure, misaligned or mispositioned crystals, leads or tabs, physical damage to any electrical elements, and improper internal bonds.

20.2.1 Extraneous material - There shall be no loose or attached extraneous material 0.127 millimeter (0.005 in.) or larger within the enclosure. Particular attention shall be given to all soldered or welded junctions within the enclosure. Weld or solder splatter, excess solder, or extra tabs shall be cause for rejection (See Figure M-1).

20.2.2 Misaligned elements - Except where specifically formed to hold the crystal, no internal leads or tabs shall be deformed greater than 15° from a straight line, nor shall the crystal alignment be greater than 20° from the designed vertical (or horizontal) position (See Figure M-2).

20.2.3 Physical damage - There shall be no evidence of cuts or nicks on the internal metal wires or tabs (See Figure M-3).

20.2.4 Improper bonds - Internal wire bonds shall be inspected to ensure proper overlapping of jointed materials. Insufficient or excessive overlapping, beyond normal design shall be cause for rejection. In addition, the tab-to-crystal attachment shall be inspected for excessive material (See Figure M-4).

20.2.5 Clearance - Acceptable crystals shall exhibit adequate internal clearance. The minimum acceptable distance between any internal conductive element and a metal case header or unused pin shall be 0.508 millimeter (0.02 in.).

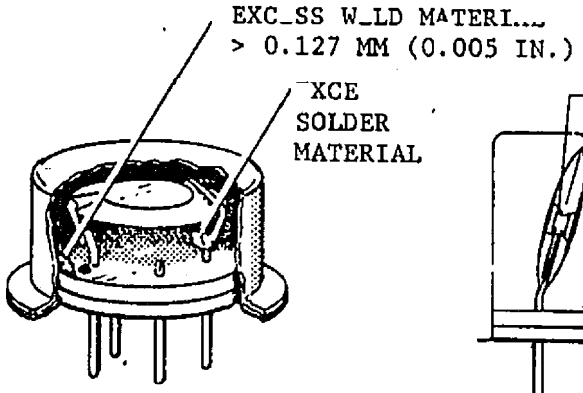

Figure M-1. Unacceptable extraneous material

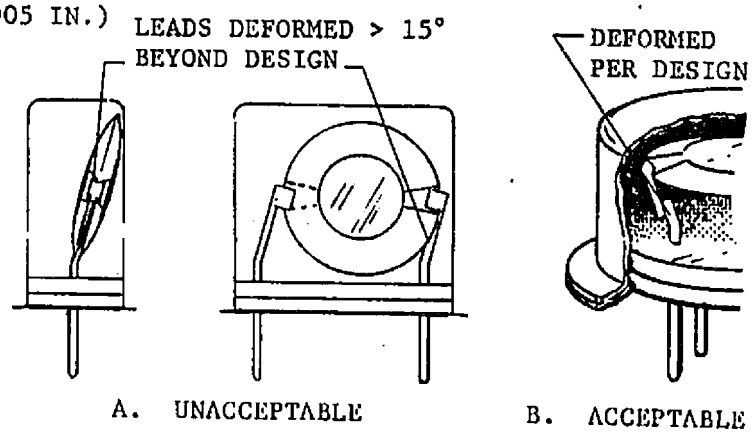

Figure M-2. Misaligned elements

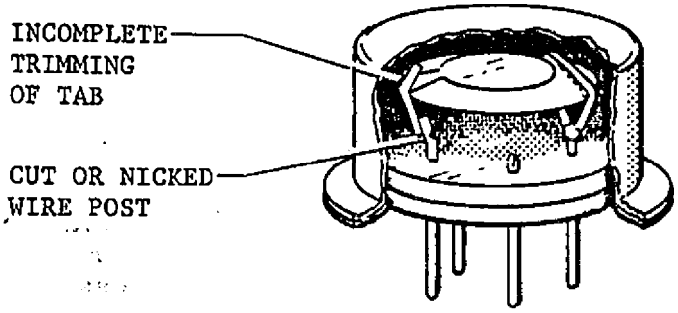

Figure M-3. Unacceptable physical damage

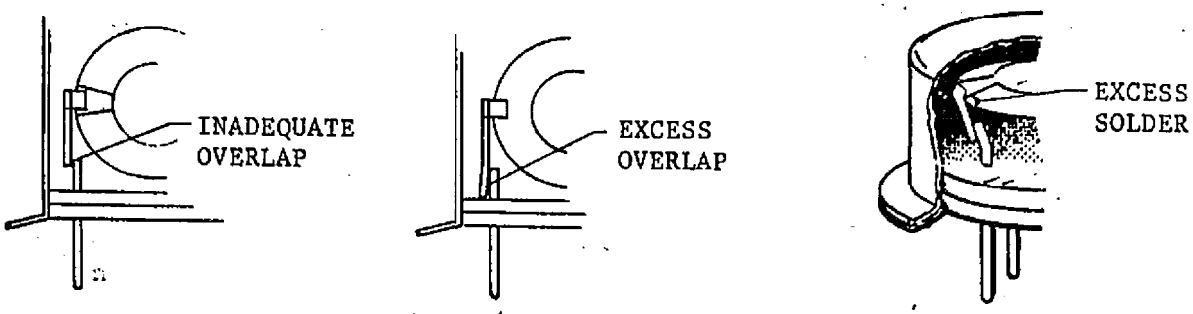

Figure M-4. Improper bonds

A00364

MSFC-STD-355C
Amendment 1
8 June 1977

7/6/77 RELEASE

George C. Marshall Space Flight Center
National Aeronautics and Space Administration

STANDARD

RADIOGRAPHIC INSPECTION OF ELECTRONIC PARTS

This amendment forms a part of MSFC-STD-355C, dated 15 May, 1975.

Page C-40

20.2.4, add the following new paragraph:

"(c) The whisker may be deformed to the extent that it touches itself if the minimum whisker clearance zone specified in figure C-2 is maintained. This criteria applies only to whiskers metallurgically bonded to the post and to the die."

Preparing Activity: EC43

MSFC-STD-355C
Amendment 1
8 June 1977

7/6/77

George C. Marshall Space Flight Center
National Aeronautics and Space Administration

STANDARD

RADIOGRAPHIC INSPECTION OF ELECTRONIC PARTS

This amendment forms a part of MSFC-STD-355C, dated 15 May, 1975.

Page C-40

20.2.4, add the following new paragraph:

"(c) The whisker may be deformed to the extent that it touches itself if the minimum whisker clearance zone specified in figure C-2 is maintained. This criteria applies only to whiskers metallurgically bonded to the post and to the die."

Preparing Activity: EC43

MSFC-STD-355C
AMENDMENT 2
February 19, 1982
AMENDING
MSFC-STD-355C
May 15, 1975

GEORGE C. MARSHALL SPACE FLIGHT CENTER

NATIONAL AERONAUTICS AND SPACE ADMINISTRATION

STANDARD

RADIOGRAPHIC INSPECTION OF ELECTRONIC PARTS

This amendment forms a part of George C. Marshall Space Flight Center(MSFC) Standard MSFC-STD-355C, May 15, 1975, and has been approved by MSFC and is available for use by MSFC and associated contractors.

(1) Page 2, paragraph 4.2.2(b); revise to read as follows:

"(b) H and D film density - 1.0 to 3.0"

(2) Page 2, paragraph 4.2.3; delete and substitute:

"4.2.3 Film - The x-ray film shall be very fine grain single emulsion or equivalent that will permit compliance with this standard.

Note: Single emulsion very fine grain film can provide a higher degree of sensitivity, definition and contrast and thus should be considered for use when performing failure investigations or other hardware off-line diagnostics."

Custodian:

NASA - George C. Marshall Space Flight Center

Preparing activity:

George C. Marshall Space Flight Center

CONCURRENCE SHEET, CONTINUED

1. DATE: March 30, 1982

2. SUBJECT (Or brief description):

Amendment to MSFC-STD-355C, dated February 19, 1982

3. ADDRESSED TO:

4. NAME OF ORIGINATING DIVISION OR OFFICE:

Electronic Parts Verification Branch, 3-4562

5. APPROVAL OF DIRECTOR, CHIEF OR AUTHORIZED REPRESENTATIVE:

Signature and Date

6. CONCURRENCES:

DIVISION OR OFFICE	SIGNATURE OF DIRECTOR, CHIEF OR AUTHORIZED REPRESENTATIVE	DATE
~~EC11~~ EH11	Raymond L. Gause	4-7-82
EH02	Carlo F. Key	4-8-82
EH01	David H. Hoppers	4/20/82
EH01	Robert Schwinghamer	4/21/82

7. REMARKS/COMMENTS:

PLEASE RETURN CONCURRENCE SHEET TO EC43.

CONCURRENCE SHEET

1. DATE: March 30, 1982

SUBJECT (Or brief description):

Amendment to MSFC-STD-355C, dated February 19, 1982.

3. ADDRESSED TO:

4. NAME OF ORIGINATING DIVISION OR OFFICE AND PHONE NO.:

Electronic Parts Verification Branch, 3-4562

5. APPROVAL OF DIRECTOR, CHIEF OR AUTHORIZED REPRESENTATIVE: Leon Hamiter 3/31/82
Signature and Date

6. CONCURRENCES:

DIVISION OR OFFICE	SIGNATURE OF DIRECTOR, CHIEF OR AUTHORIZED REPRESENTATIVE	DATE
EC43	Bill Corder Bill Corder	3/30/82
EC43	F. Villella F. Villella	3/30/82
EC43	Leon Hamiter Leon Hamiter	3/30/82
EC41	John M. Gould John M. Gould	3/30/82
EC01	Fred S. Woitalik Fred S. Woitalik	4/2/82
EH13	John M. Knadler J. M. Knadler	4/6/82

7. REMARKS/COMMENTS:

(Continued on next sheet.)

MSFC DOCUMENTATION REPOSITORY - DOCUMENT INPUT RECORD

I. GENERAL INFORMATION

1. APPROVED PROJECT:	2. DOCUMENT/ DRAWING NUMBER:	3. CONTROL NUMBER:	4. RELEASE DATE:	5. SUBMITTAL DATE:
Multi-program projects	MSFC-STD-355 Revision C		05/07/1982	10/07/2002

6. DOCUMENT/DRAWING TITLE:	7. REPORT TYPE:
Radiographic Inspection of Electronic Parts	MSFC Standard

8. CONTRACT NUMBER / PERFORMING ACTIVITY:	9. DRD NUMBER:	10. DPD / DRL / IDRD NUMBER:

11. DISPOSITION AUTHORITY (Check one):	12. SUBMITTAL AUTHORITY:	13. RELEASING AUTHORITY:
☒ Official Record - NRRS 8/12/A ☐ Reference Copy - NRRS 8.5.3 (destroy when no longer needed)	Patrick D. McManus/ED16	Terry S. Roberts/ED16 10/7/02

14. SPECIAL INSTRUCTIONS:
Document will be available on the Electronic Master List.

Irene Taylor / ED10 CER

15. CONTRACTOR/SUBMITTING ORGANIZATION, ADDRESS AND PHONE NUMBER:	16. ORIGINATING NASA CENTER:
ED16 Patrick D. McManus (256) 544-3383	MSFC
	17. OFFICE OF PRIMARY RESPONSIBILITY: ED16

18. PROGRAMMATIC CODE (5 DIGITS):	19. NUMBER OF PAGES: 102

II. ENGINEERING DRAWINGS

20. REVISION:	21. ENGINEERING ORDER:	22. PARTS LIST:	23. CCBD:

III. REPORTS, SPECIFICATIONS, ETC.

24. REVISION:	25. CHANGE:	26. VOLUME:	27. BOOK:	28. PART:	29. SECTION:
C	2				

30. ISSUE:	31. ANNEX:	32. SCN:	33. DCN:	34. AMENDMENT:

35. APPENDIX:	36. ADDENDUM:	37. CCBD:	38. CODE ID:	39. IRN:

IV. EXPORT AND DISTRIBUTION RESTRICTIONS

- ☐ Privacy Act (see MWI 1382.1)
- ☐ Proprietary (see MPD 2210.1)
- ☐ Patent (see MPG 2220.1)
- ☐ ITAR (see MPG 2220.1)
- ☐ EAR (see MPG 2220.1)
- ☐ Other ACI (see NPG 1620.1 and MPG 1600.1) _____
- ☒ No statutory or institutional restrictions applicable -- material may be electronically distributed to user in the NASA domain

V. ORIGINATING ORGANIZATION APPROVAL

40. ORG. CODE:	41. PHONE NUMBER:	42. NAME:	43. SIGNATURE/DATE:
ED16	(256) 544-3383	Patrick D. McManus	Patrick D. McManus 10/7/2002

VI. TO BE COMPLETED BY MSFC DOCUMENTATION REPOSITORY

44. RECEIVED BY:	45. DATE RECEIVED:	46. WORK ORDER:
Tammy Wise	10-15-03	

F-28-20

MSFC-STD-355C
Amendment 1
8 June 1977

7/6/77 RELEASE

George C. Marshall Space Flight Center
National Aeronautics and Space Administration

STANDARD

RADIOGRAPHIC INSPECTION OF ELECTRONIC PARTS

This amendment forms a part of MSFC-STD-355C, dated 15 May, 1975.

Page C-40

20.2.4, add the following new paragraph:

"(c) The whisker may be deformed to the extent that it touches itself if the minimum whisker clearance zone specified in figure C-2 is maintained. This criteria applies only to whiskers metallurgically bonded to the post and to the die."

Preparing Activity: EC43