REVISIONS			
SYMBOL	DESCRIPTION	DATE	APPROVAL
-	Initial Release	09/01/2009	JS

SHEET REVISION STATUS

All sheets are at the same revision.

ORIGINATOR: Mary Morrow 9/1/09	DATE 09-01-09	FSC: 5935
REVIEWED: Bruce Meinhold 9/1/2009	09-01-09	Connector, Electrical, RF, Twinaxial, Microminiature
Code 562 APPROVAL: Rich Williams 9/1/2009	09-01-09	
ADDITIONAL APPROVAL:		

NATIONAL AERONAUTICS AND SPACE ADMINISTRATION
GODDARD SPACE FLIGHT CENTER
GREENBELT, MD 20771

CAGE CODE: 25306

1.0 SCOPE

1.1 Scope. This specification establishes the performance, design, development, and verification requirements for an ultraminiature, differential contact, twinaxial connector for termination of 100 ohm differential twinaxial cable, as defined in Figure 4 herein. Connectors delivered to this specification are intended for use in high-reliability space flight applications.

1.2 Part or Identifying Number. Connectors procured in compliance with this specification shall be identified by a Goddard part number having the following form:

GSFC Part Identifier	Dash Number
G311P835	–XX (reference paragraph 6.2 herein)

2.0 APPLICABLE DOCUMENTS

2.1 Government specifications, standards, and handbooks. The following Government specifications, standards, and handbooks form a part of this drawing to the extent specified herein. Unless otherwise specified, the issues of these documents are those listed in the issue of the Department of Defense Index of Specifications and Standards (DoDISS) and supplement thereto, in effect on the date of the contract or purchase order.

STANDARDS

Military

MIL-STD-202 Test Methods for Electronic and Electrical Component Parts.

MIL-STD-1285 Marking of Electrical and Electronic Parts

SPECIFICATIONS

Military

MIL-PRF-49142 Connector, Triaxial, Radio Frequency, General Specification for

Federal

FED-STD-H28 Screw-Thread Standards for Federal Services.

A-A-59588 Commercial Item Description; Rubber, Silicone

National Aeronautics and Space Administration (NASA)

EEE-INST-002 Instructions for EEE Parts Selection, Screening, and Qualification

2.2 Non-Government Publications. The following documents form a part of this document to the extent specified herein. Unless otherwise specified, the issues of the documents that are DoD adopted are those listed in the issue of the DoDISS in effect on the date of the contract or purchase order. Unless otherwise specified, the issues of documents not listed in the DoDISS are the issues of the documents in effect on the date of the contract or purchase order.

American Society for Testing and Materials (ASTM)

ASTM A342 Permeability of Feebly Magnetic Materials.

ASTM B488 Electrodeposited Coatings of Gold for Engineering Uses.

ASTM A582 Stainless Steel Bars

ASTM E595 Total Mass Loss and Collected Volatile Condensable Materials From Outgassing in a Vacuum Environment.

ASTM B16 Brass Alloy Rod & Bar.

ASTM B196 Copper-Beryllium Alloy Rod and Bar.

ASTM D 1710 Extruded PolyTetraFluoroEthylene (PTFE) Rod, Heavy Walled Tubing and Basic Shapes

American National Standards Institute (ANSI)

ANSI/NCSL Z540-1-1994 (R2002) General Requirements for Calibration Laboratories and Measuring and Test Equipment.

Joint Industry Standard

J-STD-004 Requirements for Soldering Fluxes.

J-STD-005 Requirements for Soldering Pastes.

Electronics, Components, Assemblies and Materials Association (ECA)

ECA/EIA-364-20 Withstanding Voltage Test Procedure for Electrical Connectors, Sockets,and Coaxial Contacts.

ECA/EIA-364-21	Insulation Resistance Test Procedure for Electrical Connectors, Sockets, and Coaxial Contacts.
ECA/EIA-364-27	Mechanical Sock (Specified Pulse) Test Procedure for Electrical Connectors.
ECA/EIA-364-28	Vibration Test Procedure for Electrical Connectors and Sockets.
ECA/EIA-364-32	Thermal Shock (Temperature Cycling) Test Procedure for Electrical Connectors and Sockets.

International Organizations for Standards (ISO)

ISO 17025:2000	General Requirements for the Competence of Testing and Calibration Laboratories.

Society of Automotive Engineers (SAE)

SAE-AMS-QQ-N-290	Nickel Plating
SAE-AS-39029	Contacts, Electrical Connector, General Specification for.

Copies of DoD adopted non-Government standards are available to military activities through the DoD Single Stock Point, Standardization Documents Order Desk, Bldg. 4D, 700 Robbins Avenue, Philadelphia, PA 19111-5094. Military activities may obtain copies of non-DoD adopted documents from the sponsoring Industry Association. Non-military activities may obtain copies of non-Government standards and publications from the sponsoring industry organization.

2.3 Order of Precedence. In the event of a conflict between the text of this drawing and the references cited herein, the text of this drawing takes precedence. Nothing in this document, however, supersedes applicable laws and regulations unless a specific exemption has been obtained.

3.0 REQUIREMENTS

3.1 Absolute Maximum Ratings. Extended operation at the maximum levels may degrade device performance and affect reliability.

Maximum temperature: -60°C to +165°C
Maximum contact Current Rating 1.5 AMPS DC
Maximum voltage: 100 VDC @ 5 MHz from contact to contact
200 VDC @ 5 MHz from a contact to the outer shell.

3.2 Individual Item Requirements. Individual item requirements shall be as specified herein. Connectors supplied to this specification shall meet all performance requirements specified herein, under all combinations of environmental conditions and input voltages as specified herein.

3.3 Parts, Materials and Processes. Parts, materials and processes used to build the Connector shall be as specified herein. However, when materials, parts, or processes are not specified explicitly, materials, parts and processes shall be used which will enable the Connector to meet the performance requirements of this drawing. Acceptance or approval of any constituent material or component shall not be construed as a guarantee for acceptance of the finished product.

3.4 Electrical Requirements

3.4.1 Permeability. When connectors are tested in accordance with paragraph 4.7.4, the permeability (mμ) shall be less than 2.0.

3.4.2 Dielectric Withstanding. When connectors are tested in accordance with paragraph 4.7.3, there shall be no evidence of breakdown.

3.4.3 Insulation Resistance. When connectors are tested as specified in paragraph 4.7.5, the insulation resistance shall not be less than 5,000 megohms (MΩ) minimum. Following the environmental tests, insulation resistance shall not change from the initial requirement.

3.4.4 Contact Resistance. When tested as specified in 4.7.12, contact resistance shall not exceed the limits on Table 1.

3.5 Mechanical and Environmental Requirements

3.5.1 Shock. When connectors are tested as specified in paragraph 4.7.10, there shall be no electrical interruptions exceeding 1.0 microsecond (µs). There shall not be any evidence of visual or mechanical damage after the test.

3.5.2 **Vibration.** When connectors are tested in accordance to paragraph 4.7.11, there shall be no electrical interruptions exceeding 1.0µs. There shall be no evidence of visual mechanical damage after the test.

3.5.3 **Thermal Shock.** When connectors are tested in accordance to paragraph 4.7.9, there shall be no evidence of visual mechanical damage to the connector and it shall meet the dielectric withstanding voltage requirements.

3.5.4 **Coupling Retention and Cable Retention.** When connectors are tested in accordance with paragraph 4.7.7, the coupling ring shall remain intact and cable will be retained to the connectors without breaks in continuity.

3.5.5 **Force to Engage and Disengage.** When tested in accordance with paragraph 4.7.6, during the engaging cycle, the torque necessary to fully engage the connectors shall not exceed that specified. Upon completion of engagement, an opposite force necessary for disengagement shall be applied. Full engagement shall not damage the contacts or dislodge the connector components.

3.5.5.1 **Socket Contacts.** The force necessary to fully engage the center socket contacts shall not be greater then 12.0 ounces (3.33 N). The force necessary to separate the sockets shall not be less than 0.5 ounces (139mN).

3.6 **Material and Finish Requirements**

3.6.1 **Plug Bodies, All Contacts, and Other Metal Parts.**

3.6.1.1 **Materials.** Shall be beryllium copper per ASTM B196, alloy UNS C17200 orUNS C17300, temper TD04.

3.6.1.2.1 **Finish.** Shall be plated to a minimum of 50 micro-inches (1.25μm) of gold in accordance with ASTM B488, type II, code C, class 1.25, over 50 micro-inches (1.25μm) minimum of nickel in accordance with SAE-AMS-QQ-N-290, class 1.

3.6.1.3 **Dust Caps**. One black conductive polyethylene dust cap shall be supplied with each connector.

3.6.2 **Jack Body and Outer Metal Parts**

3.6.2.1 **Materials:** Stainless steel per ASTM-A582, Alloy UNS S30300.

3.6.2.2 **Finish:** Gold plated per ASTM-B488 Type II Class 1.25, minimum.

3.6.3 **Jack Bushing**

3.6.3.1 **Materials.** Brass in accordance with ASTM B16, alloy UNS C36000, half hard.

3.6.3.2 **Finish.** The connector finish shall be gold plated in accordance with ASTM B488 Type II Class 1.25, to a minimum thickness of 50 μin (1.25μm), over 50 μin (1.25μm) minimum of nickel in accordance with SAE-AMS-QQ-N-290, Class I.

3.6.4 **Connector Insulators.** The connector Insulator shall be PolyTetraFluoroEthylene (PTFE) per ASTM D 1710.

3.6.5 **Connector O-Ring.** (Jack Only). Shall be silicone rubber per A-A-59588, grade 50**.** O Ring Shall be Vacuum Baked at 10^{-5} torr, minimum, at 171°C, minimum, for 24 hours, minimum, prior to installation in the connector.

3.6.6 **Potting Compund**. (Solder Jack Only). Emerson & Cuming Stycast 2850 FT. Alternate material shall require written approval from the procuring activity.

3.6.7 **Outgassing**. All non metallic materials used in fabrication of these connectors shall meet Collectible Volatile Condensable Material (CVCM) of $\leq$0.10 % and a Total Mass Loss (TML) of $\leq$1%. If material does not meet these acceptance levels, they must be tested in accordance to paragraph 4.7.8 herein.

3.6.8 **Prohibited Materials**. Materials, such as silver plating, pure tin, zinc, and cadmium shall not be used to construct the connector.

3.7 **Design, Construction, and Physical Dimensions.** The design, construction, and physical dimensions of the connector shall be specified in Figure 1 for part number S311P835-01 Figure 2 for part number S311P835-02**,** and Figure 3 for part number S311P835-03.

3.7.1 **Screw Threads**. Screw threads shall be in accordance with figures 1, 2 and FED-STD-H28 unless otherwise specified

3.7.2 **Coupling Proof Torque.** The Coupling Proof Torque shall be a maximum of 5.2 inch-lbs (0.58Nm).

3.7.3 **Accommodating cable.** Connectors covered by this specification are intended to be terminated to 100 ohm, twinaxial cable, with the configuration as shown in Figure 4 herein.

3.8 **Marking.** Devices that have been subjected to and passed the quality assurance requirements of this drawing shall be marked in accordance with MIL-STD-1285, Method I, and shall include the following, as a minimum.

a. Procurement part number as specified in paragraph 6.2 herein
b. Vendor cage code or identifying information
c. Date/lot code

3.9 **Certificate of Conformance.** A certificate of conformance, signed by the quality assurance representative of the manufacturer, shall accompany each shipment of connectors delivered against this specification.

3.10 **Workmanship.** The connector's components shall be free of defects.
Body cracks: chips, or plating defects
Contact Elements: cracks, thinned areas, cracked or spread elements, plating defects
Insulation: cracks, chips, or voids; threads: nicks, cracks, or plating defects
Markings: illegible or incomplete

3.11 **Resistance to Soldering Heat and Solderability.** When tested in accordance with paragraph 4.7.13, proper wetting of the solder joints shall be exhibited, and there shall not be any reflow of insulating dielectric materials.

Table I. Electrical Performance Table.

Parameter	**Limit**
Dielectric Withstanding Voltage	Contact to contact: 250 VDC min. Each contact to outer shell: 500 VDC min.
Operating Temperature Range	-60°C to +165°C
Insulation Resistance	5,000 MΩ min. with applied voltage: Each contact to outer shell: 125 VDC
Contact Current Rating	1.5 Amps DC at 125°C max.
Permeability (mμ)	2.0 Max
Contact Resistance	55mΩ

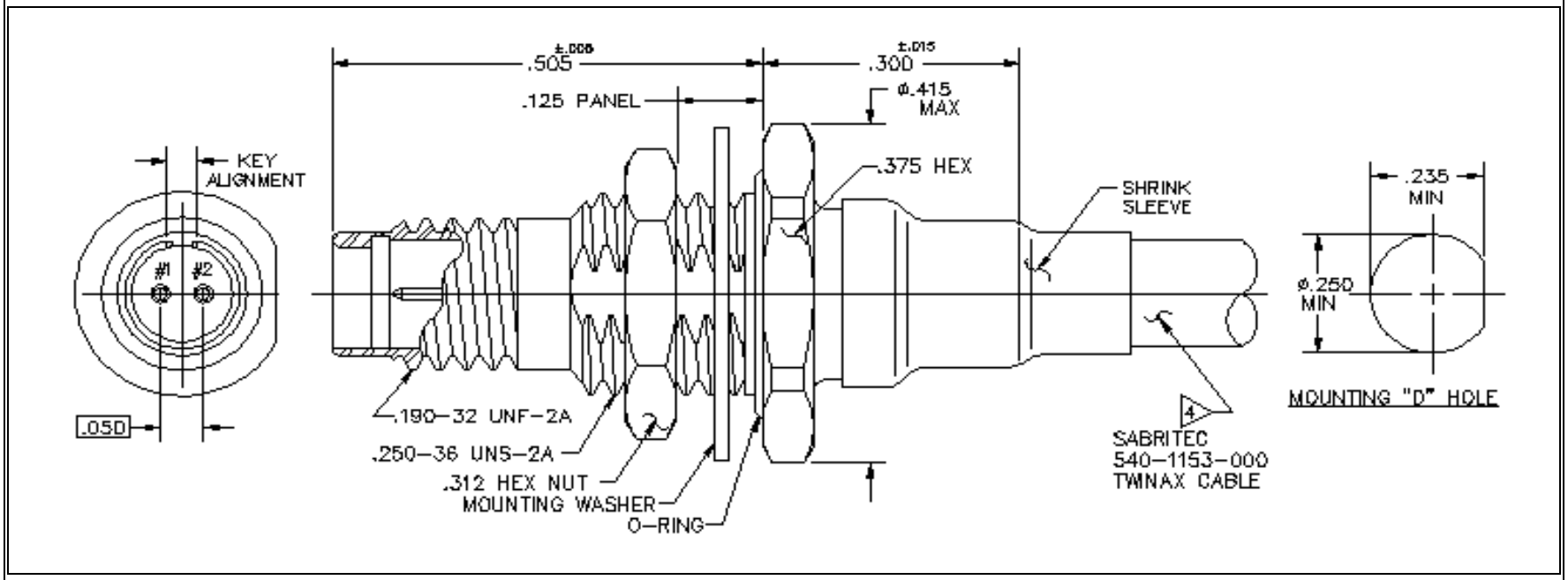

Figure 1: Micro Twinax Bulkhead Cable Jack
Note: Cable shown for reference only, supplied separately.

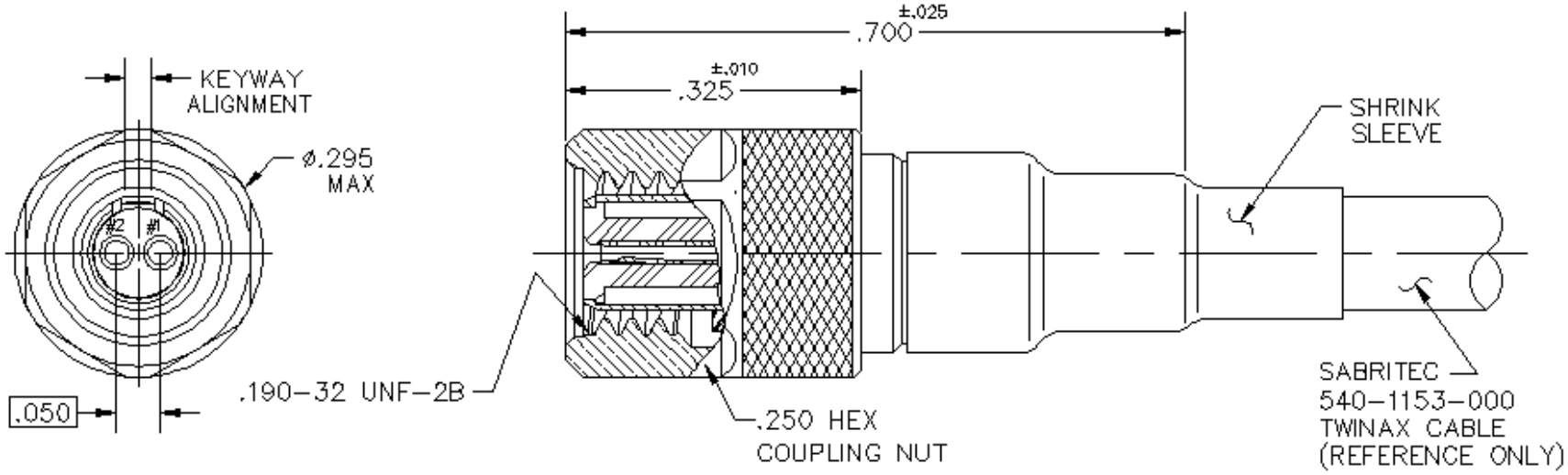

. **Figure 2:** Micro Twinax Cable Plug

Note: Cable shown for reference only – supplied separately

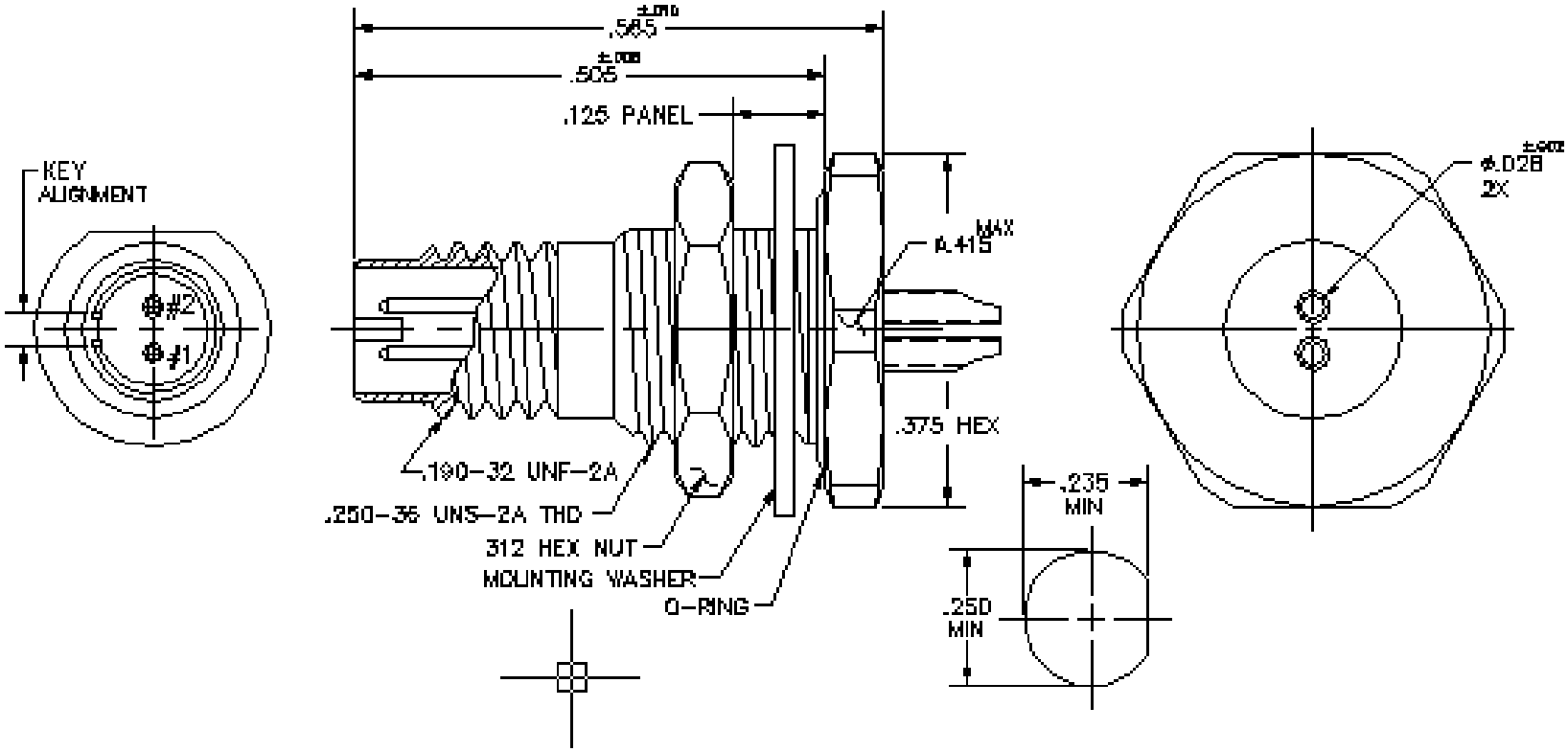

Figure 3: Micro Twinax Bulkhead Jack

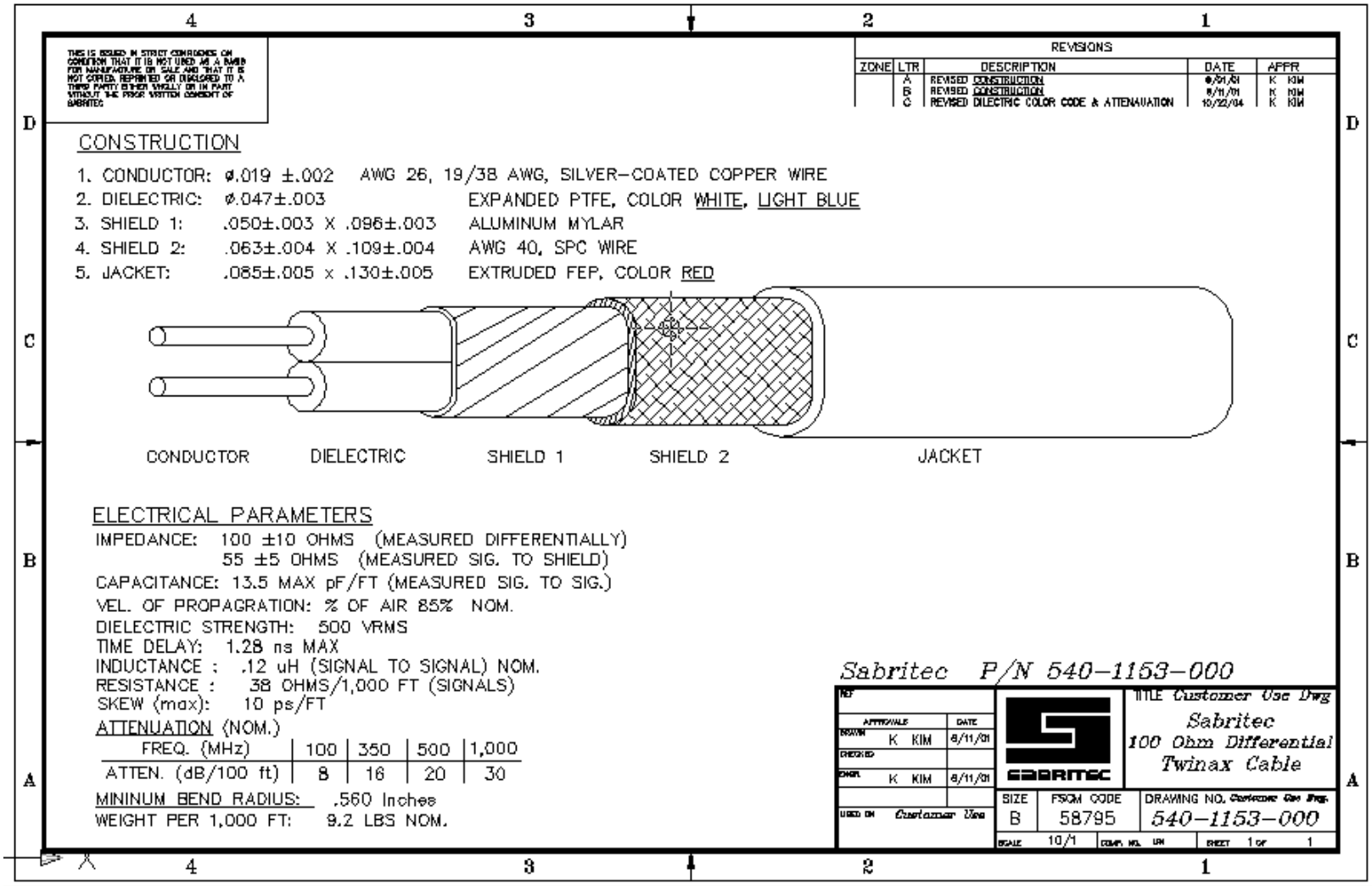

Figure 4: Twinax Cable

Table II. Group A Inspection 1/

Test No.	Test Description	Reference Documents		
		Requirement Paragraph	**Test Paragraph**	**Test Specification**
Subgroup 1: **100% Screening Tests**				
1	Visual Examination / Workmanship	3.10	4.7.1	EEE-INST-002, Sect. C2, Table 4A
Subgroup 2: **Sample Tests 3 (0) 2/**				
2	Mechanical/Dimensional Examination	3.10 & 3.7	4.7.2	Figures 1 & 2
3	Plating Thickness & Adhesion	3.6	4.3.1	
4	Dielectric Withstanding Voltage (DWV, Sea Level)	3.4.2	4.7.3	ECA/EIA-364-20 Method C
5	Insulation Resistance	3.4.3	4.7.5	ECA/EIA-364-21
6	Force to Engage/Disengage	3.5.5	4.7.6	SAE-AS-39029

Notes:

1/ Tests shall be performed in the order shown.

2/ Subgroup 2 sample tests are to be performed on three mated pairs, that have been assembled to flexible twinaxial cable as defined in Figure 4 herein.

Table III. Qualification Requirements 1/, 2/

	Test Description	Test References		
		Requirement Paragraph	**Test Paragraph**	**Test Specification**
Pre-Production Examinations				
	Materials Analysis	3.6	4.3	
	Outgas Testing	3.6.5	4.7.8	ASTM E595
	Permeability	3.4.1	4.7.4	ASTM A342
Group 1: Sample Size 3 (0)				
	Visual and Mechanical Examination	3.10 & 3.7	4.7.1 and 4.7.2	EEE-INST-002, Sect. C2, Table 4A
	Insulation Resistance	3.4.3	4.7.5	ECA/EIA-364 -21
	Contact Force to Engage/Disengage	3.5.5	4.7.6	SAE-AS-39029
Group 2: Sample Size 3 (0)				
	Resistance to Soldering Heat and Solderability	3.11	4.7.13	J-STD-004, J-STD-005
	Coupling and Cable Retention	3.5.4	4.7.7	EEE-INST-002, Sect. C2 Table 3I
	Vibration Testing	3.5.2	4.7.11	ECA/EIA-364-28, Condition III
	Shock (Specified Pulse)	3.5.1	4.7.10	ECA/EIA-364-27, Condition E
	Thermal Shock	3.5.3	4.7.9	ECA/EIA-364-32, Condition III
	Contact Resistance	3.4.4	4.7.12	SAE-AS-39029 , Paragraph 4.7.5 and Table V.

Table III Notes:

1/ Tests shall be performed in the order shown.

2/ Connector Inspection Lots subjected to Qualification testing shall have successfully completed 100% Group A screening inspection per Table II. Qualification tests are to be performed on three mated pairs, that have been assembled to flexible twinaxial cable as defined in Figure 4 herein.

4.0 QUALITY ASSURANCE PROVISIONS

4.1 Responsibility for Inspection. Unless otherwise specified in the contract purchase order, the manufacturer of the connector is responsible for the performance of all inspection requirements as specified herein. Except as otherwise specified, the procuring activity retains the right to witness or re-perform such inspections, where witnessing or re-performing such inspections are deemed necessary to assure that supplies and services conform to prescribed requirements.

4.1.1 Test Equipment and Inspection Facilities. Test and measuring equipment and inspection facilities of sufficient accuracy, quality, and quantity to permit performance of the required inspection, shall be established and maintained by the manufacturer. The establishment and maintenance of a calibration system to control the accuracy of the measuring and test equipment shall be in accordance with ISO-10725:2000, ANSI/NCSL Z540-1-1994 (R2002), or other approved specification.

4.2 Classification of Inspections. The inspections specified herein shall be classified as follows.

a. Materials inspection.
b. Conformance inspection.
e. Qualification testing.

4.3 Material Inspection. Material inspection shall consist of certification supported by verifying data that the materials used in fabricating the device are in accordance with paragraph 3.6 herein and the applicable referenced specifications or requirements. Material inspection shall be completed prior to the start of fabrication.

4.3.1 Plating Thickness and Adhesion. Plating thickness shall be verified in accordance with paragraph 3.6. Plating adhesion shall be verified by placing adhesive tape over plated surface and pulling from contacts and body. There shall not be any gold plating stuck to the tape.

4.4 Conformance Inspection

4.4.1 Inspection of Product for Delivery. Inspection of product for delivery shall consist of Group A inspection.

4.4.2 Inspection Lot. An inspection lot shall consist of all connectors of the same PIN produced under essentially the same conditions, and offered for inspection at one time.

4.4.3 Group A Screening Inspections. These shall consist of the inspections specified in table II, performed in the order shown. Inspection lots submitted to qualification testing must have successfully completed Group A inspection.

4.5 **Qualification Testing.** Qualification shall consist of the testing specified in Table III herein. Qualification shall be required on a minimum of three (3) mated pair test samples.

4.6 **Disposition of Sample Units.** Sample units, which have been subjected to the qualification inspection specified herein, shall not be delivered as flight material. Qualification samples shall be packaged separately from the deliverable flight hardware, clearly marked as non-flight qualification samples, and delivered with the final qualification data package.

4.7 **Methods of Examination and Test.** The methods for examination and test shall be as specified herein and as otherwise specified.

4.7.1 **External Visual Inspection.** Shall be performed per EEE-INST-002; section C2; Table 4A. Rejectable defects shall include, but are not limited to, the items noted in 3.10.

4.7.2 **Mechanical Inspection.** Dimensions shall be measured and conform to Figures 1, 2, or 3 herein, as applicable.

4.7.3 **Dielectric Withstanding Voltage.** Two samples shall be assembled with 100 ohm test cable meeting the dimensions shown in Figure 4 herein; 2ft (0.6m) minimum per ECA/EIA-364-20. Apply voltage as listed in table I.

4.7.4 **Permeability.** Testing shall be performed per ASTM A342 using the voltages as listed in Table I.

4.7.5 **Insulation Resistance.** Testing shall be performed per ECA/EIA-364-21, except the magnitude and placement of the test voltages shall be as listed in Table I.

4.7.6 **Force to Engage/Disengage.** Testing shall be performed per MIL-PRF-49142 paragraph 4.6.2.1. Longitudinal force not applicable; applied torque: 2.5 inch-lb (0.28Nm) max.

4.7.7 **Coupling Retention and Cable Retention.** Apply a torque of 4.0 inch-lb (0.45Nm) to the connector mated to its mating connector or a test jig. After 1 minute, the connector shall be disengaged. Re-mate connectors and tighten to a torque of 2.6 inch-lb (0.29Nm). Apply a force of 2.5 pounds (0.28Nm) longitudinally to the mated connector for 1 minute.

4.7.8 **Outgas Testing.** Materials shall be tested in accordance with ASTM E595.

4.7.9 **Thermal Shock.** Testing shall be performed in per ECA/EIA-364-32; Table 2, test condition III (-65°C to +125°C) Following thermal shock, the DWV test of 4.7.3 shall be repeated.

4.7.10 **Shock.** Testing shall be performed per ECA/EIA-364-27 test condition E. Connectors shall be mounted using normal means.

4.7.11 **Vibration.** Testing shall be performed per ECA/EIA-364-28, condition III.

4.7.12 **Contact Resistance.** When tested in accordance with SAE-AS39029, the inner contact resistance from terminal end to terminal end shall be 55 milliohms maximum. The test current shall be 1 ampere +/- 10%.

4.7.13 **Resistance to Soldering Heat and Solderability.** Samples shall be terminated to cable with the use of Sn63Pb27 solder per J-STD-005 and type ROL1 flux per J-STD-004. Following the terminations, the solder shall be thoroughly cleaned and inspected for proper wetting.

4.8 **Acceptance Data Package.** One copy of the Acceptance Data Package shall be delivered with each shipment of flight connectors. The data package shall contain the following information, as a minimum.

a. A Certificate of Conformance.
b. Attribute summary for Group A inspection.
c. Attribute summary for qualification tests.

5.0 PACKAGING

5.1 **Packaging Requirements.** Connectors shall be clean, dry, and packaged individually in an electrostatic discharge (ESD) safe packaging in a secure manner that will afford adequate protection against corrosion, deterioration, and physical damage during common carrier shipment to the procuring activity. These packages shall conform to the applicable carrier rules and regulations.

5.2 **Assembly Instructions**. Assembly instructions shall be provided with each delivered connector.

6.0 NOTES

6.1 **Notice.** When GSFC drawings, specification, or other data are used for any purpose other than in connection with a definitely related GSFC procurement operation, the United States Government thereby incurs no responsibility nor any obligation whatsoever; the fact that GSFC might have formulated, furnished, or in any way supplied the said drawings, specification, or other data is not to be regarded by implication or otherwise in any manner licensing the holder or any person or corporation, or conveying any right or permission to manufacture, use, or sell any patented invention that may in any way be related thereto.

Custodian: QPLD Administrator
Goddard Space Flight Center
Parts, Packaging, and Assembly Technologies Office
Mailstop 562
Building 22, Room 028
Greenbelt, Maryland 20771

6.2 Approved Source(s) of Supply. Identification of the suggested source(s) of supply hereon is not to be construed as a guarantee of present or continued availability as a source of supply for the item. Parts shall be purchased only from a source of supply, as listed on the latest revision of the GSFC QPLD.

Type	Procurement Part Number	Vendor Similar Part Number 1/
Cable Jack	311P835-01	014134-5008
Cable Plug	311P835-02	014034-2038
Bulkhead Jack	311P835-03	014100-5002

1/ Caution. Do not use this part number for item acquisition. Connectors acquired to this part number may not satisfy the performance requirements of this specification.

Vendor CAGE Code	Vendor Name and Address
58795	Sabritec 17550 Gillette Avenue Irvine, CA 92614-5610