Radiation and Reliability Concerns for Modern Nonvolatile Memory Technology

Timothy R. Oldham[1], Mark R. Friendlich[2], Hak S. Kim[2], Melanie D. Berg[2], and K.A. LaBel[3]

1. Dell Systems Federal Government
2. MEI Technologies, Inc.
3. NASA GSFC

Supported by NASA Electronic Parts and Packaging Program (NEPP) and the Defense Threat Reduction Agency (DTRA)

Outline

- Introduction
- Background
- Basic Physical Mechanisms
- Device and Circuit Effect
- Conclusions

Nonvolatile Memories

- Flash (NAND, NOR)
- Nanocrystal Flash
- Magnetic Memory (MRAM)
- Phase Change--Chalcogenide, (CRAM)
- Ferroelectric (FRAM)
- CNT

Flash Background

Disadvantages
- Slow programming
- Wear out
- Scaling/retention

Advantages
- Cost per bit
- Low power

Bottom Line: Heavily used in hand-held, battery-powered consumer electronics (cell phones, iPods, digital cameras, MP3)

Floating Gate Transistor

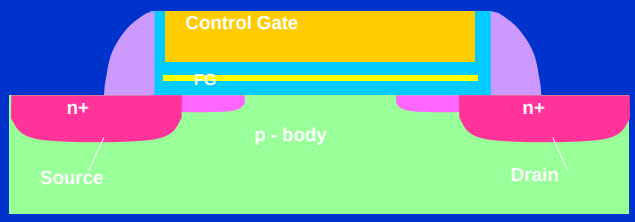

- Write (Program) operation—Fowler-Nordheim (FN) injection of electrons into FG
- Erase operation—FN injection of electrons from FG to substrate
- Repeated P/E operations cause damage to tunnel oxide

Flash Architectures

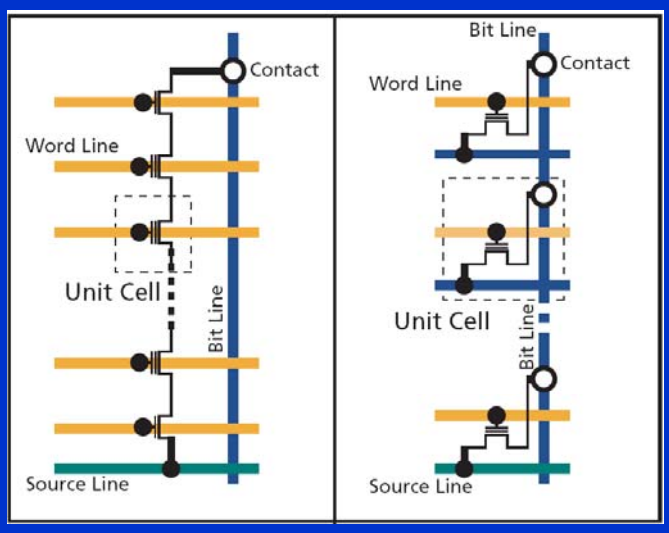

NAND NOR

Flash Memory Cells

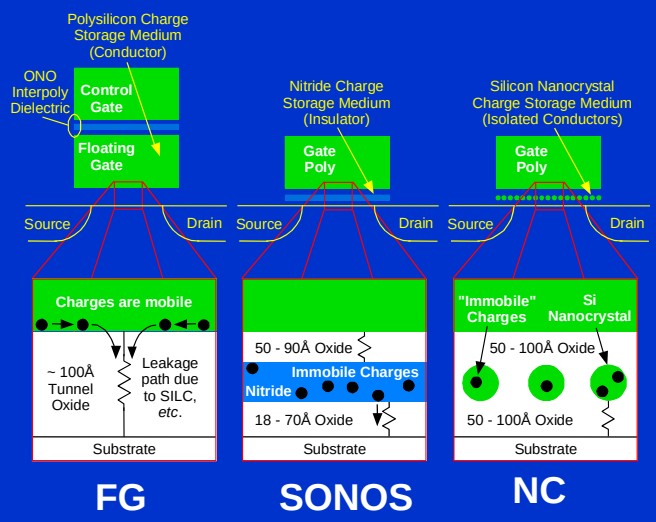

SBD-Retention Problem

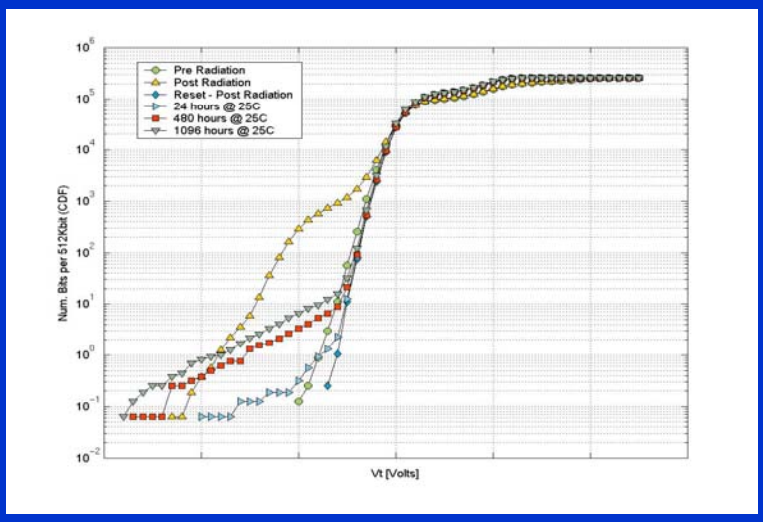

Reliability/Endurance Study

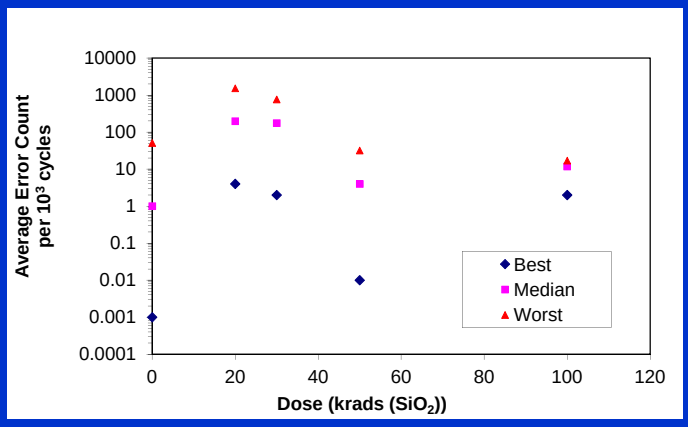

Micron 4Gb NAND Flash

No clear indication that radiation exposure reduces flash endurance

Retention Failures

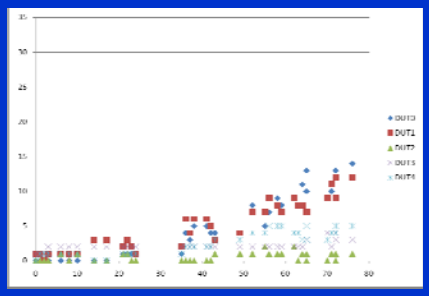

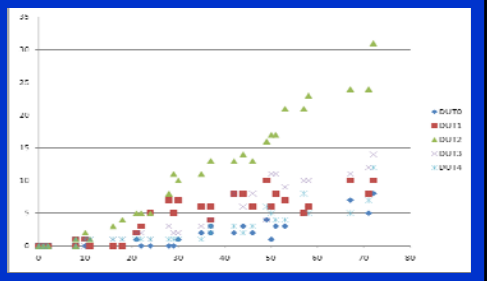

Micron 8G NAND
10^5 P/E Cycles
Unirradiated Control

Micron 8G NAND
10^5 P/E Cycles
50 krads (SiO_2)

Flash SEU Compared to Volatile Memory

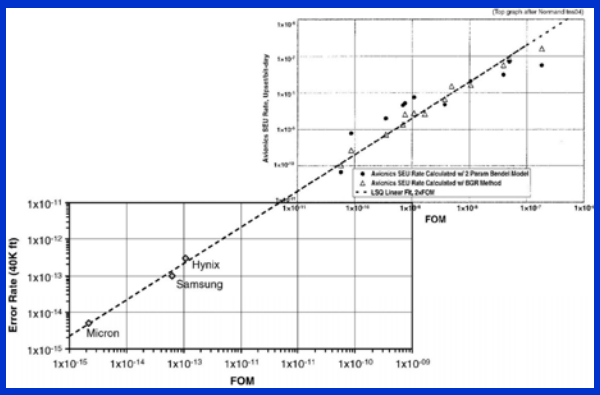

"Destructive Current Spikes"

- 10^7 Au ions/cm^2 LET=85
- Flux in space is 1 ion/cm^2 every 7200 years
- Five spikes is one every $2x10^6$ ions, one event every $14x10^9$ years (interval since Big Bang!)
- Failed to duplicate these spikes with different test equipment
- If we had duplicated them on the ground, they still would not be real in space.

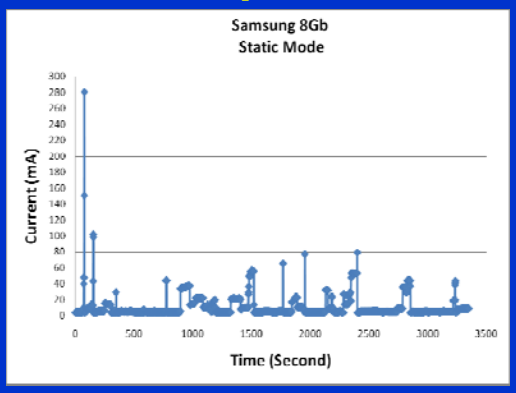

▪Phase Change Highlights

- Heavy ion testing performed at TAMU
- Chalcogenide storage element appeared to be "bullet proof"
- Unhardened commercial substrate suffered SEL
- TID better than 100 krads (SiO_2)

Radiation Testing—Lessons Learned

- Angular effects matter—differences observed between normal and high angle, also between tilt and roll at same angle
- Destructive effects in flash occur primarily in high voltage Program or Erase operations—have to emphasize
- Try to keep flux low enough to avoid collective effects, but want high fluence for good statistics—trade-offs to optimize beam time
- Have to estimate rate in space for effects observed in testing, e.g., flux in space at LET>60 is less than 1 ion/cm^2 per hundred years

Conclusions

- NAND flash is attractive for space applications, because of cost, weight, power
- TID response is better than 100 krad for some parts, and seems to improve with scaling
- SEE error rate appears to be acceptably low
- Destructive events can occur, but rate in space would be low
- SEFI recovery techniques not yet determined, but rate appears manageable

Acknowledgements

- Work is jointly supported by NASA NEPP program (Ken LaBel) and by DTRA (Bruce Wilson)
- Many individual collaborators at NASA GSFC
- Industrial collaborators at Samsung Semiconductor , Numonyx and at Freescale Semiconductor