N A S A P a r t s S e l e c t i o n L i s t

(N P S L)

15 February 2005

Table of Contents

Introduction

1.0 Foreword

2.0 About this document

3.0 Using this document

4.0 General Requirements

Parts Selection

Capacitors

Circuit Protection Devices

Fuses

Connectors

Filters

Inductors

Microcircuits

Monolithics

Hybrids

Resistors

Semiconductors (Summary)

Diodes

Transistors

Thermistors

Wire and Cable

Appendices

A - Derating Guidelines

B - Additional Parts Information Links

C - Prohibited Materials

1.0 FOREWORD

The NASA EEE Parts Selection List (NPSL) has been developed as a "parts selection tool" specifically geared toward design and parts engineering organizations internal to NASA and to universities and original equipment manufacturers (OEMs) that do not have the resources for a dedicated quality and reliability infrastructure in parts engineering. The NPSL is a listing of electrical, electronic, and electromechanical (EEE) part types and advanced packaging technologies such as Multi-Chip Modules (MCM) which are produced under various government and/or industry quality systems.

Since NASA's Standard EEE Parts List, MIL-STD-975, was cancelled without replacement on May 3, 1998, the NPSL provides a viable alternative for parts selection. However, there are some key differences in the philosophy of these two documents which users must be aware of:

MIL-STD-975 NPSL

Defines "Standard" and "Non-Standard" Parts Leaves standardization up to the individual flight projects Defines a "Non-Standard Parts Approval Request" (NSPAR) policy Leaves it to the individual flight projects to approve parts for the intended application Intended to be invoked as a contract requirement Not intended to be invoked as a contract requirement Very stringent requirements for parts listings Designed to facilitate listing of newer, advanced technologies

OEMs that have an established parts engineering infrastructure may elect to use the NPSL to augment their own existing part selection lists. The NPSL may be chosen, in part or in its entirety, to be a subset of a Project Approved Parts List (PAPL) or equivalent. The decision to invoke the NPSL shall be made by the project based on the parts management and control requirements for that mission. The NPSL itself, should not be imposed as a contractual requirement, but the associated part listings may be established as approved selections by the project.

2.0 ABOUT THIS DOCUMENT

2.1 General:

The NPSL is a selection tool providing designers with a list of EEE parts intended to meet system design requirements and NASA Parts Program quality/reliability levels. It is not mandatory that the parts listed herein be the only selections used to design a system, but if a particular function is needed and a suitable part is listed, the NASA EEE Parts Assurance Group (NEPAG) recommends the listed part as the first order of precedence for selection. Selecting a part from the NPSL may provide cost savings/ avoidance for the project because:

The procurement specification already exists The manufacturer has had a NASA survey or government audit performed The parts are available under one or several NASA accepted quality assurance systems Part qualification has been successfully completed All or most of the parts engineering has already been performed

The parts listed are approved for use only if NASA flight project approval is given. The document lists parts according to established quality assurance levels and NASA Parts Program knowledge of the product and manufacturer such as qualification history, GIDEP and failure trends, and delivery performance. This combination allows NEPAG to make a technical assessment of the quality, availability, capability and reliability and to list parts at a corresponding quality level within this document.

2.2 World Wide Web Access to the NPSL

The NPSL has been developed and will be maintained as an on-line World Wide Web homepage accessible via http://nepp.nasa.gov/npsl. The primary objectives of using the WWW as the platform for maintaining the NPSL are to:

Provide broad and ready access by NASA affiliated organizations world wide Facilitate quick updates, modifications, and revisions Provide links to additional EEE part information

Users will have to access the NPSL on-line and be able to download the document if a printout is desired.

2.3 Configuration Management

Under Construction

2.4 Appendices:

Appendix A (when released) will contain guidelines for derating parts. In general, these guidelines are accepted by NEPAG for use on all projects. Flight projects may elect to further develop these guidelines into requirements. Appendix A may not contain derating criteria for all part types, but guidelines provided can be used as a baseline for project derating requirements.

Appendix B is a repository of useful WWW links to additional parts information databases which can be accessed to support parts selection and application issues.

3.0 USING THIS DOCUMENT

The NPSL has been structured into four primary sections to facilitate finding the information of interest:

Welcome and User Feedback Section (Banner Page) Use Policy Section Parts Listings by Commodity Type Sections Appendices

The Parts Listings by Commodity Type Sections contains the actual part selection listings. The part types which will be covered in the NPSL consist of advanced packaging technologies such as MCMs and the commodities defined as electrical, electronic, and electromechanical (EEE) parts. The commodity types are listed below according to the Federal Stock Classification (FSC) system.

Part Types FSC

Capacitors 5910 Circuit Breakers 5925 Connectors 5935 Crystals and Crystal Oscillators 5955 Fiber Optics 60GP Filters 5915 Fuses 5920 Inductors 5950 Microcircuits (Monolithic and Hybrid) 5962 Relays 5945 Resistors 5905 Semiconductors (Diode and Transistor) 5961 Thermistors 5905 Transformers 5950 Wire and Cable 6145

Within each commodity class the parts are listed in order by procurement specifications in existence as NASA, DoD, or other space agency (e.g. ESA or NASDA) specifications. The part listing for each specification begins with a detailed explanation of the part numbering system. These explanations and the part listings which follow help the user "build" the appropriate part number for the project application. General functional descriptions and generic part number cross-references are provided to assist the user in matching functionality. The part quality levels, radiation tolerance levels (if known), and the available manufacturer sources are also identified.

Although extensive efforts have been made to maintain the accuracy of the supplier information within the part listings, users are encouraged to visit the Defense Supply Center Columbus (DSCC), http://www.dscc.dla.mil/programs/qmlqpl/. DSCC is the Department of Defense agency responsible for certifying suppliers of military specification EEE parts. At this site, users can download the latest Qualified Products List (QPL) for the part type of interest.

4.0 GENERAL REQUIREMENTS

Selection of parts for inclusion in the device listings in this document is based on a review of technical data by the NASA EEE Parts Assurance Group (NEPAG) for quality and reliability trends. The major criteria used to evaluate candidate parts are:

o Quality system and assurance level the products are produced under

o Product performance

o Product workmanship assessments

o Destructive Physical Analysis results

o Failure histories

o Reliability trends

o GIDEP alert histories of the product and manufacturer

o Qualification and screening test results

o Product availability

o Manufacturer audit and survey results

o Manufacturer responsiveness to corrective actions

o Manufacturer delivery histories

Participation by the manufacturers in a quality program such as QPL, QML, and ISO 9000. will not automatically qualify their products for listing in the NPSL. Listings will be based on results from assessments of all the major criteria listed above. EEE parts-related activities throughout NASA provide recommendations for listing parts in this document.

NOTE: Unless specifically stated within the parts selection tables of the NPSL, listing of a device technology herein does NOT imply/guarantee Radiation Hardness Assurance (RHA). Applications concerned with a device's ability to tolerate exposure to various forms of space radiation (e.g., total ionizing dose, single event effects, etc.) should be reviewed and have the device assessed by the Program's radiation assurance experts. The following resources may also be consulted for initial guidance:

NASA Goddard Radiation Effects and Analysis Jet Propulsion Laboratory Radiation Effects

4.1 NASA Parts Levels

The NPSL lists products based on three quality levels defined by NEPAG: Level 1, Level 2, and Level 3. The definitions for each Level and the criteria used to list a part in a particular Level are not part approvals nor is this document a project approved parts list. The NPSL will not provide information on whether or not a part meets individual project flight requirements. Instead, it provides a list of products and associated manufacturers that meet recognized quality assurance baselines, qualification test regimens, and screening requirements necessary for space flight acceptance based on levels of risk. The part selected must be assessed independently by the project or the NASA center or OEM's parts organization to determine if it meets the requirements for the project. The parts engineering organizations at the NASA centers will assist users in making this determination. The Levels herein are not directly related to mission classification, cost, or schedule and users should make the appropriate Level tradeoffs when considering which parts to choose from the list.

4.1.1 Level 1:

Level 1 is the highest product assurance class assigned to parts listed in this document. Level 1 parts are those produced under assurance classes recognized by NASA as providing the highest possible level of quality and reliability (e.g. QML Class V K, JANS for discrete semiconductors, QPL Class S, Failure Rate Level (FRL) S), from NASA approved manufacturing sources, and meeting NASA space level parts and packaging program assessment criteria. The technical assessment results for Level 1 products will show that no known trends exist which have a negative impact on the quality, reliability, or performance for space flight applications. The Level 1 criteria is summarized as follows:

o The supplier's facility(s) must be certified under a recognized quality assurance system (e.g. QML, QPL, ISO 9000) and produce products to the space industry recognized highest assurance classes (e.g. QML V, JANS for discrete semiconductors, QPL Class S, FRL S, GSFC S311 specification) or equivalent. There are exceptions to these levels where this preferred part reliability level is unavailable; these exceptions are shown in the individual part listings.

o A Defense Supply Center Columbus (DSCC) audit or a NASA program manufacturer survey to the highest assurance classes must have been successfully completed within the past 2 years.

o A part procurement specification, containing the highest assurance class requirements, must exist. Parts must have been procured previously by a NASA project using this specification.

o Historical DPA and other parts analysis data on the manufacturer's products must be available and not reveal poor workmanship trends or rejection trends.

o Failure analyses history for the manufacturers products should not reveal problem trends attributed to part quality and reliability.

o No recent unresolved GIDEP Alerts (past 3 years) exist that have a major impact on the Level 1 products quality or reliability. No GIDEP Alert or NASA Parts Advisory trends exist on the manufacturer or product.

o Available data on manufacturer performance must show no trend for late delivery of products to NASA projects.

o Qualification to the requirements of the procurement specification must have been successfully completed. No qualification issues exist and no problem trends from previous qualifications exist.

4.1.2 Level 2:

Level 2 is the second highest product assurance class assigned to parts listed in this document. Level 2 parts are those produced under assurance classes recognized by NASA to have a high level of quality and reliability (e.g. QML Q H, QPL Class B, JANTXV for discrete semiconductors, FRL R or P), from NASA approved manufacturing sources, and meeting NASA space level parts and packaging program assessment criteria. The Level 2 criteria is summarized as follows:

o The supplier's facility(s) must be certified under a recognized quality assurance system (e.g. QML, QPL, ISO 9000) and produce products to space industry recognized high assurance classes (e.g. QML Q, QPL B, JANTXV for discrete semiconductors, FRL R or P, GSFC S311 specification) or equivalent. Any exceptions to these levels where the preferred part reliability level is unavailable, are shown in the individual part listings.

o A Defense Supply Center Columbus (DSCC) audit or a NASA program manufacturer survey must have been successfully completed within the past 2 years.

o A part procurement specification, containing the high assurance class requirements, must exist. Parts must have been procured previously by a NASA project using this specification.

o DPA and other parts analysis data on the manufacturer's products must be available and must not reveal any significant problems due to poor workmanship and must show minimal reject rates.

o Failure analyses history for the manufacturers products should not reveal problem trends attributed to part quality and reliability.

o No unresolved GIDEP Alert trends exist that have a major impact on the Level 2 products quality or reliability. No GIDEP Alert or NASA Parts Advisory trends exist on the manufacturer or product.

o Available data on manufacturer performance must show consistent on-time delivery of products to NASA projects.

o Qualification to the requirements of the procurement specification must have been successfully completed. Qualification issues and problems from previous qualifications must have been resolved (not by waiver).

4.1.3 Level 3:

Level 3 is the minimum product assurance class assigned to parts listed in this document. Level 3 contains many advanced electronic functions (from a space flight applications standpoint) and has been created to provide a technology insertion path into NASA flight projects. Parts listed are those produced by reputable manufacturers under a recognized quality assurance system (QML, QPL, ISO 9000) or their equivalent. Typically, only a limited amount of information is available to NEPAG for these parts and NASA has minimal visibility into the manufacturing and testing of Level 3 product. The parts are usually available commercially and have the capability to be used in space applications. The intent of Level 3 listings is to provide products that are newer, have greater functionality and enhanced performance characteristics, and provide higher levels of integration. Because the product has little or no

heritage in space flight application and data is unavailable or scarce, these parts are considered higher risk than the Level 1 and Level 2 parts. While the price of these parts may be less than the traditional Levels, more engineering evaluation may be needed to qualify the part for the project's application. The overall reliability and cost of ownership should be considered when selecting these parts. The Level 3 criteria is summarized as follows:

The manufacturer has supplied and qualified parts for several NASA space projects within the past 2 years. The parts and manufacturers have been recommended by one of the following NASA programs.

o PSAP o ASAP o ET o AIT

A NASA, DoD, or other space agency procurement specification (e.g. ESA SCC or NASDA QTS) exists. Available data on the manufacturer shows no significant problem trends such as GIDEP Alerts or NASA Parts Advisories, a low DPA rejection rate for the manufacturer's products in general, and no significant failures attributable to product quality and/or reliability.

NEPAG recommends selecting a Level 3 product when a higher Level part does not exist and/or enhanced functionality is required to meet system design requirements. Parts in this Level are not recommended for use in mission critical applications. Selecting these parts may require further engineering evaluation and approval by the project, but some heritage exists. Additionally, having more projects use these parts helps NEPAG acquire the technical data necessary for moving the parts into the higher Levels.

Table of Contents

Introduction

1.0 Foreword

2.0 About this document

3.0 Using this document

4.0 General Requirements

Parts Selection

Capacitors

Circuit Protection Devices

Fuses

Connectors

Filters

Inductors

Microcircuits

Monolithics

Hybrids

Resistors

Semiconductors (Summary)

Diodes

Transistors

Thermistors

Wire and Cable

Appendices

A - Derating Guidelines

B - Additional Parts Information Links

C - Prohibited Materials

1.0 FOREWORD

The NASA EEE Parts Selection List (NPSL) has been developed as a "parts selection tool" specifically geared toward design and parts engineering organizations internal to NASA and to universities and original equipment manufacturers (OEMs) that do not have the resources for a dedicated quality and reliability infrastructure in parts engineering. The NPSL is a listing of electrical, electronic, and electromechanical (EEE) part types and advanced packaging technologies such as Multi-Chip Modules (MCM) which are produced under various government and/or industry quality systems.

Since NASA's Standard EEE Parts List, MIL-STD-975, was cancelled without replacement on May 3, 1998, the NPSL provides a viable alternative for parts selection. However, there are some key differences in the philosophy of these two documents which users must be aware of:

MIL-STD-975 NPSL

Defines "Standard" and "Non-Standard" Parts Leaves standardization up to the individual flight projects Defines a "Non-Standard Parts Approval Request" (NSPAR) policy Leaves it to the individual flight projects to approve parts for the intended application Intended to be invoked as a contract requirement Not intended to be invoked as a contract requirement Very stringent requirements for parts listings Designed to facilitate listing of newer, advanced technologies

OEMs that have an established parts engineering infrastructure may elect to use the NPSL to augment their own existing part selection lists. The NPSL may be chosen, in part or in its entirety, to be a subset of a Project Approved Parts List (PAPL) or equivalent. The decision to invoke the NPSL shall be made by the project based on the parts management and control requirements for that mission. The NPSL itself, should not be imposed as a contractual requirement, but the associated part listings may be established as approved selections by the project.

2.0 ABOUT THIS DOCUMENT

2.1 General:

The NPSL is a selection tool providing designers with a list of EEE parts intended to meet system design requirements and NASA Parts Program quality/reliability levels. It is not mandatory that the parts listed herein be the only selections used to design a system, but if a particular function is needed and a suitable part is listed, the NASA EEE Parts Assurance Group (NEPAG) recommends the listed part as the first order of precedence for selection. Selecting a part from the NPSL may provide cost savings/ avoidance for the project because:

The procurement specification already exists The manufacturer has had a NASA survey or government audit performed The parts are available under one or several NASA accepted quality assurance systems Part qualification has been successfully completed All or most of the parts engineering has already been performed

The parts listed are approved for use only if NASA flight project approval is given. The document lists parts according to established quality assurance levels and NASA Parts Program knowledge of the product and manufacturer such as qualification history, GIDEP and failure trends, and delivery performance. This combination allows NEPAG to make a technical assessment of the quality, availability, capability and reliability and to list parts at a corresponding quality level within this document.

2.2 World Wide Web Access to the NPSL

The NPSL has been developed and will be maintained as an on-line World Wide Web homepage accessible via http://nepp.nasa.gov/npsl. The primary objectives of using the WWW as the platform for maintaining the NPSL are to:

Provide broad and ready access by NASA affiliated organizations world wide Facilitate quick updates, modifications, and revisions Provide links to additional EEE part information

Users will have to access the NPSL on-line and be able to download the document if a printout is desired.

2.3 Configuration Management

Under Construction

2.4 Appendices:

Appendix A (when released) will contain guidelines for derating parts. In general, these guidelines are accepted by NEPAG for use on all projects. Flight projects may elect to further develop these guidelines into requirements. Appendix A may not contain derating criteria for all part types, but guidelines provided can be used as a baseline for project derating requirements.

Appendix B is a repository of useful WWW links to additional parts information databases which can be accessed to support parts selection and application issues.

3.0 USING THIS DOCUMENT

The NPSL has been structured into four primary sections to facilitate finding the information of interest:

Welcome and User Feedback Section (Banner Page) Use Policy Section Parts Listings by Commodity Type Sections Appendices

The Parts Listings by Commodity Type Sections contains the actual part selection listings. The part types which will be covered in the NPSL consist of advanced packaging technologies such as MCMs and the commodities defined as electrical, electronic, and electromechanical (EEE) parts. The commodity types are listed below according to the Federal Stock Classification (FSC) system.

Part Types FSC

Capacitors 5910 Circuit Breakers 5925 Connectors 5935 Crystals and Crystal Oscillators 5955 Fiber Optics 60GP Filters 5915 Fuses 5920 Inductors 5950 Microcircuits (Monolithic and Hybrid) 5962 Relays 5945 Resistors 5905 Semiconductors (Diode and Transistor) 5961 Thermistors 5905 Transformers 5950 Wire and Cable 6145

Within each commodity class the parts are listed in order by procurement specifications in existence as NASA, DoD, or other space agency (e.g. ESA or NASDA) specifications. The part listing for each specification begins with a detailed explanation of the part numbering system. These explanations and the part listings which follow help the user "build" the appropriate part number for the project application. General functional descriptions and generic part number cross-references are provided to assist the user in matching functionality. The part quality levels, radiation tolerance levels (if known), and the available manufacturer sources are also identified.

Although extensive efforts have been made to maintain the accuracy of the supplier information within the part listings, users are encouraged to visit the Defense Supply Center Columbus (DSCC), http://www.dscc.dla.mil/programs/qmlqpl/. DSCC is the Department of Defense agency responsible for certifying suppliers of military specification EEE parts. At this site, users can download the latest Qualified Products List (QPL) for the part type of interest.

4.0 GENERAL REQUIREMENTS

Selection of parts for inclusion in the device listings in this document is based on a review of technical data by the NASA EEE Parts Assurance Group (NEPAG) for quality and reliability trends. The major criteria used to evaluate candidate parts are:

o Quality system and assurance level the products are produced under

o Product performance

o Product workmanship assessments

o Destructive Physical Analysis results

o Failure histories

o Reliability trends

o GIDEP alert histories of the product and manufacturer

o Qualification and screening test results

o Product availability

o Manufacturer audit and survey results

o Manufacturer responsiveness to corrective actions

o Manufacturer delivery histories

Participation by the manufacturers in a quality program such as QPL, QML, and ISO 9000. will not automatically qualify their products for listing in the NPSL. Listings will be based on results from assessments of all the major criteria listed above. EEE parts-related activities throughout NASA provide recommendations for listing parts in this document.

NOTE: Unless specifically stated within the parts selection tables of the NPSL, listing of a device technology herein does NOT imply/guarantee Radiation Hardness Assurance (RHA). Applications concerned with a device's ability to tolerate exposure to various forms of space radiation (e.g., total ionizing dose, single event effects, etc.) should be reviewed and have the device assessed by the Program's radiation assurance experts. The following resources may also be consulted for initial guidance:

NASA Goddard Radiation Effects and Analysis Jet Propulsion Laboratory Radiation Effects

4.1 NASA Parts Levels

The NPSL lists products based on three quality levels defined by NEPAG: Level 1, Level 2, and Level 3. The definitions for each Level and the criteria used to list a part in a particular Level are not part approvals nor is this document a project approved parts list. The NPSL will not provide information on whether or not a part meets individual project flight requirements. Instead, it provides a list of products and associated manufacturers that meet recognized quality assurance baselines, qualification test regimens, and screening requirements necessary for space flight acceptance based on levels of risk. The part selected must be assessed independently by the project or the NASA center or OEM's parts organization to determine if it meets the requirements for the project. The parts engineering organizations at the NASA centers will assist users in making this determination. The Levels herein are not directly related to mission classification, cost, or schedule and users should make the appropriate Level tradeoffs when considering which parts to choose from the list.

4.1.1 Level 1:

Level 1 is the highest product assurance class assigned to parts listed in this document. Level 1 parts are those produced under assurance classes recognized by NASA as providing the highest possible level of quality and reliability (e.g. QML Class V K, JANS for discrete semiconductors, QPL Class S, Failure Rate Level (FRL) S), from NASA approved manufacturing sources, and meeting NASA space level parts and packaging program assessment criteria. The technical assessment results for Level 1 products will show that no known trends exist which have a negative impact on the quality, reliability, or performance for space flight applications. The Level 1 criteria is summarized as follows:

o The supplier's facility(s) must be certified under a recognized quality assurance system (e.g. QML, QPL, ISO 9000) and produce products to the space industry recognized highest assurance classes (e.g. QML V, JANS for discrete semiconductors, QPL Class S, FRL S, GSFC S311 specification) or equivalent. There are exceptions to these levels where this preferred part reliability level is unavailable; these exceptions are shown in the individual part listings.

o A Defense Supply Center Columbus (DSCC) audit or a NASA program manufacturer survey to the highest assurance classes must have been successfully completed within the past 2 years.

o A part procurement specification, containing the highest assurance class requirements, must exist. Parts must have been procured previously by a NASA project using this specification.

o Historical DPA and other parts analysis data on the manufacturer's products must be available and not reveal poor workmanship trends or rejection trends.

o Failure analyses history for the manufacturers products should not reveal problem trends attributed to part quality and reliability.

o No recent unresolved GIDEP Alerts (past 3 years) exist that have a major impact on the Level 1 products quality or reliability. No GIDEP Alert or NASA Parts Advisory trends exist on the manufacturer or product.

o Available data on manufacturer performance must show no trend for late delivery of products to NASA projects.

o Qualification to the requirements of the procurement specification must have been successfully completed. No qualification issues exist and no problem trends from previous qualifications exist.

4.1.2 Level 2:

Level 2 is the second highest product assurance class assigned to parts listed in this document. Level 2 parts are those produced under assurance classes recognized by NASA to have a high level of quality and reliability (e.g. QML Q H, QPL Class B, JANTXV for discrete semiconductors, FRL R or P), from NASA approved manufacturing sources, and meeting NASA space level parts and packaging program assessment criteria. The Level 2 criteria is summarized as follows:

o The supplier's facility(s) must be certified under a recognized quality assurance system (e.g. QML, QPL, ISO 9000) and produce products to space industry recognized high assurance classes (e.g. QML Q, QPL B, JANTXV for discrete semiconductors, FRL R or P, GSFC S311 specification) or equivalent. Any exceptions to these levels where the preferred part reliability level is unavailable, are shown in the individual part listings.

o A Defense Supply Center Columbus (DSCC) audit or a NASA program manufacturer survey must have been successfully completed within the past 2 years.

o A part procurement specification, containing the high assurance class requirements, must exist. Parts must have been procured previously by a NASA project using this specification.

o DPA and other parts analysis data on the manufacturer's products must be available and must not reveal any significant problems due to poor workmanship and must show minimal reject rates.

o Failure analyses history for the manufacturers products should not reveal problem trends attributed to part quality and reliability.

o No unresolved GIDEP Alert trends exist that have a major impact on the Level 2 products quality or reliability. No GIDEP Alert or NASA Parts Advisory trends exist on the manufacturer or product.

o Available data on manufacturer performance must show consistent on-time delivery of products to NASA projects.

o Qualification to the requirements of the procurement specification must have been successfully completed. Qualification issues and problems from previous qualifications must have been resolved (not by waiver).

4.1.3 Level 3:

Level 3 is the minimum product assurance class assigned to parts listed in this document. Level 3 contains many advanced electronic functions (from a space flight applications standpoint) and has been created to provide a technology insertion path into NASA flight projects. Parts listed are those produced by reputable manufacturers under a recognized quality assurance system (QML, QPL, ISO 9000) or their equivalent. Typically, only a limited amount of information is available to NEPAG for these parts and NASA has minimal visibility into the manufacturing and testing of Level 3 product. The parts are usually available commercially and have the capability to be used in space applications. The intent of Level 3 listings is to provide products that are newer, have greater functionality and enhanced performance characteristics, and provide higher levels of integration. Because the product has little or no

heritage in space flight application and data is unavailable or scarce, these parts are considered higher risk than the Level 1 and Level 2 parts. While the price of these parts may be less than the traditional Levels, more engineering evaluation may be needed to qualify the part for the project's application. The overall reliability and cost of ownership should be considered when selecting these parts. The Level 3 criteria is summarized as follows:

The manufacturer has supplied and qualified parts for several NASA space projects within the past 2 years. The parts and manufacturers have been recommended by one of the following NASA programs.

o PSAP o ASAP o ET o AIT

A NASA, DoD, or other space agency procurement specification (e.g. ESA SCC or NASDA QTS) exists. Available data on the manufacturer shows no significant problem trends such as GIDEP Alerts or NASA Parts Advisories, a low DPA rejection rate for the manufacturer's products in general, and no significant failures attributable to product quality and/or reliability.

NEPAG recommends selecting a Level 3 product when a higher Level part does not exist and/or enhanced functionality is required to meet system design requirements. Parts in this Level are not recommended for use in mission critical applications. Selecting these parts may require further engineering evaluation and approval by the project, but some heritage exists. Additionally, having more projects use these parts helps NEPAG acquire the technical data necessary for moving the parts into the higher Levels.

Home
|
NASA Parts Selection List (NPSL)
| Capacitors
About NPSL
Prohibited Materials
Parts Selection Table of Contents
Capacitors
Circuit Protection Devices
Fuses
Connectors
Filters
Inductors
Microcircuits
NEW!
Monolithics
Hybrids
Resistors
Semiconductors
(Summary)
Diodes
Transistors
Thermistors
Wire and Cable

NASA Parts Selection List

Capacitors

The following basic capacitor dielectric types are available for selection:

Ceramic	MIL-PRF-20	CCR	MIL-PRF-123	CKS	MIL-PRF-39014	CKR	MIL-PRF-55681	CDR	MIL-PRF-49470	PS	DSCC-DWG-87106	----	Glass	MIL-PRF-23269	CY
Tantalum	MIL-PRF-39003	CSR, CSS	MIL-PRF-39006	CLR	MIL-PRF-55365	CWR							Plastic Film	MIL-PRF-8342	

Parts
|
Packaging
|
Radiation

|

Publications

|

Calendar

|

Experts

Admin Login

|

Request Account

|

Feedback

|

Site Map

|

Help

|

Search

NEPP Program Manager:

Chuck Barnes, Jet Propulsion Laboratory

Responsible NASA Official:

Michael Sampson, NEPAG Manager

Website Comments:

Web Development Team

Last Modified:

August 8, 2001

AETD IT Security Banner

NASA Privacy Statement

Capacitor Manufacturer Listing

And Links to Manufacturer Homepages

Click

here

for detailed information regarding part technologies offered by manufacturers listed in the

PSAP

Core Suppliers List

Listed below are links to manufacturer data sites that may provide additional part related information. The linked sites are not under the control of NPSL and NASA is not responsible for information contained in the linked site. We are providing these links for your convenience only.

ATC

American Technical Ceramics

One Norden Lane

Huntington Station, NY 11746

CAGE Code: 29990
Tel.: (516) 622-4700
AVX
AVX Corporation
17th Avenue South
Myrtle Beach, SC 29577
CAGE Code: 04222
Tel.: (803) 946-0228
AVX
AVX Corporation
3900 Electronics Drive
Raleigh, NC 16299
CAGE Code: 16299
Tel.: (919) 876-1100
AVX
AVX Tantalum Corporation
69 Landry Street
Biddeford, ME 04005
CAGE Code: 17554
Tel.: (207) 282-5111
CRC
Component Research Corporation
1655 26th Street
Santa Monica, CA 90404
CAGE Code: 12517
Tel.: (213) 829-3615
DEI
Dearborn Electronics, Inc.
1221 N. Highways 17 92
Longwood, FL 32750
CAGE Code: 01884
Tel.: (305) 695-6562
KEM
Kemet Electronics Corporation
2835 Kemet Way
Simpsonville, SC 29681
CAGE Code: 31433
Tel.: (803) 963-6300
MAL
Mallory, Division of North American Capacitors

P.O. Box 489 1701 Indianapolis Road
Greencastle, IN 46153
CAGE Code: 37942
Tel.: (317) 653-3151
PRE
Presidio Components, Inc.
7169 Construction Court
San Diego, CA 92121
CAGE Code: 60212
Tel.: (619) 578-9390
SPR
Sprague Palm Beach, A Vishay Company
5900 Australian Avenue
West Palm Beach, FL 33407
CAGE Code: 26769
Tel.: (401) 863-1854
SPR
Sprague Sanford, Inc., A Vishay Company
P.O. Box 231 Lower Main Street
Sanford, ME 04073
CAGE Code: 2N936
Tel.: (207) 324-4140
TAN
Tansitor Electronics
P.O. Box 230 West Road
Bennington, VT 05201
CAGE Code: 05079
Tel.: (802) 442-5473
VIS
Vishay Sprague
70 Pembroke Road
Concord, NH 03301
CAGE Code: 13606
Tel.: (603) 224-1961
VIT
Vitramon, Inc., A Vishay Company
P.O. Box 554 Route 25
Bridgeport, CT 06601
CAGE Code: 95275
Tel.: (203) 452-5606

Ceramic Capacitors

The following ceramic capacitor specifications are available for selection:

Military Specification	Generic Designator	Description
MIL-PRF-20	CCR	Fixed, Ceramic, Temperature Compensating, Established Reliability Radial Lead or Axial Lead
MIL-PRF-123	CKS	Fixed, Ceramic,Space Level Radial Lead, Axial Lead, Chip or DIP
MIL-PRF-39014	CKR	Fixed, Ceramic, Established Reliability Radial Lead, Axial Lead or DIP
MIL-PRF-55681	CDR	Fixed, Ceramic, Chip, Established Reliability
MIL-PRF-49470	PS	Fixed, Ceramic Dielectric, Switch Mode Power Supply Stacked Chips with Lead Frames for Level 2 Applications
DSCC-DWG-87106	---	Fixed, Ceramic, Switch Mode Power Supply Stacked Chips with Lead Frames for Level 3 Applications

Packaging

|

Radiation

|

Publications

|

Calendar

|

Experts

Admin Login

|

Request Account

|

Feedback

|

Site Map

|

Help

|

Search

NEPP Program Manager:

Chuck Barnes, Jet Propulsion Laboratory

Responsible NASA Official:

Michael Sampson, NEPAG Manager

Website Comments:

Web Development Team

Last Modified:

August 8, 2001

AETD IT Security Banner

NASA Privacy Statement

Ceramic Capacitor Manufacturer Listing

And Links to Manufacturer Homepages

Click

here

for detailed information regarding part technologies offered by manufacturers listed in the

PSAP

Core Suppliers List

Listed below are links to manufacturer data sites that may provide additional part related information. The linked sites are not under the control of NPSL and NASA is not responsible for information contained in the linked site. We are providing these links for your convenience only.

ATC

American Technical Ceramics
One Norden Lane
Huntington Station, NY 11746
CAGE Code: 29990
Tel.: (516) 622-4700
AVX
AVX Corporation
17th Avenue South
Myrtle Beach, SC 29577
CAGE Code: 04222
Tel.: (803) 946-0228
AVX1
Olean Advanced Products (Division
of AVX Corp.)
1696 Seneca Avenue
Olean, NY 14760
CAGE Code: 96095
Tel.:
JDI
Johanson Dielectrics, Inc.
823 Gateway Center Way
San Diego, CA 92102
CAGE Code: 07EN1
KDC
KD Components, Incorporated
2151 Challenger Way
Carson City, NV 89706
Tel: (702) 883-8003
KEM
Kemet Electronics Corporation
2835 Kemet Way
Simpsonville, SC 29681
CAGE Code: 31433
Tel.: (803) 963-6300
PRE
Presidio Components, Inc.
7169 Construction Court
San Diego, CA 92121
CAGE Code: 60212
Tel.: (619) 578-9390

VIT

Vitramon, Inc., A Vishay Company

P.O. Box 554 Route 25

Bridgeport, CT 06601

CAGE Code: 95275

Tel.: (203) 452-5606

Click on the links below to see the associated parts selection listing:

Style	Detail Specification	Description (Click Link Below for Dimensional Drawings)	Available Capacitance Range (Rated Voltage)
CKS05	MIL-PRF-123/1	Molded, Radial Lead	4.7 pF to 4,700 pF (100 V); 270 pF to 10,000 pF (50 V)
CKS06	MIL-PRF-123/2	Molded, Radial Lead	270 pF to 100,000 pF (100 V); 2,700 pF to 1,000,000 pF (50 V)
CKS07	MIL-PRF-123/3	Molded, Radial Lead	2,700 pF to 470,000 pF (100 V); 11,000 pF to 1,000,000 pF (50 V)
CKS11	MIL-PRF-123/4	Molded, Axial Lead	4.7 pF to 1,000 pF (100 V); 110 pF to 4,700 pF (50 V)
CKS12	MIL-PRF-123/5	Molded, Axial Lead	110 pF to 4,700 pF (100 V); 240 pF to 10,000 pF (50 V)
CKS14	MIL-PRF-123/6	Molded, Axial Lead	240 pF to 10,000 pF (100 V); 1,100 pF to 47,000 pF (50 V)
CKS15	MIL-PRF-123/7	Molded, Axial Lead	1,100 pF to 100,000 pF (100 V); 2,400 pF to 180,000 pF (50 V)
CKS16	MIL-PRF-123/8	Molded, Axial Lead	2,400 pF to 470,000 pF (100 V); 11,000 pF to 1,000,000 pF (50 V)
CKS51	MIL-PRF-123/10	Chip (0805)	1 pF to 4,700 pF (50 V)
CKS52	MIL-PRF-123/11	Chip (1210)	300 pF to 47,000 pF (50 V)
CKS53	MIL-PRF-123/12	Chip (1808)	300 pF to 100,000 pF (50 V)
CKS54	MIL-PRF-123/13	Chip (2225)	1,100 pF to 470,000 pF (50 V)
CKS22	MIL-PRF-123/16	Molded, 2 Pin DIP	1 pF to 820 pF (200 V); 1,000 pF to 10,000 pF (100 V); 12,000 pF to 100,000 pF (50 V)
CKS23	MIL-PRF-123/17	Molded, 2 Pin DIP	560 pF to 10,000 pF (200 V); 2,700 pF to 220,000 pF (100 V); 4,700 pF to 10,000 pF (50 V)
CKS24	MIL-PRF-123/18	Molded, 2 Pin DIP	120,000 pF to 470,000 pF (100 V)

APPLICATION NOTES FOR MIL-PRF-123

Failure Rate Level (FRL) is not applicable to MIL-PRF-123. Part lots are essentially qualified on a lot by lot basis in accordance with the Group A and Group B test requirements of MIL-PRF-123.

MIL-PRF-123 capacitors are recommended for use in low voltage applications (< 10 Vdc). The test requirements imposed on the manufacturer are effective at identifying part lots which may be susceptible to the low voltage failure mechanism observed in multilayer ceramic capacitors.

Revision History for MIL-PRF-123 Listing in the NPSL

05/08/00	Fixed typo in CKS24 parts list section. Values from 180,000 pF to 470,000 pF are available as 50 V parts not 100 V as previously listed. Also added tolerance "M" where appropriate to this section.
04/13/99	Added values from 0.56 uF up to 1.0 uF to CKS06 style since Kemet recently qualified these styles.
04/13/99	Added Presidio Components Inc. to list of available sources for some CKS51 chip style parts.
04/13/99	Updated the pages to reflect the conversion of the specification to a "Performance Specification" (i.e, MIL-PRF-123 instead of MIL-C-123).
05/21/98	Added column to the "styles" page to show the available capacitance range and rated voltages for quick reference.
03/03/98	Added dimensional drawings to this section
05/01/97	Initial Release of MIL-C-123 Section in the NPSL

Part Number Ordering Information, example and explanation:

M123A01BPC4R7CW where,

M123A	01	B	P	C	4R7	C
Military Specification Number	Detail Specification Number	Rated Temp. Range (-55deg.C to +125deg.C)	Change in Cap with Rated Voltage and Temp.	Rated Voltage	Capacitance Value	Capacitance Tolerance

Part number ordering options are developed using the following criteria:

Style	Detail Specification		Termination (Leaded)	Termination [Non-Leaded (Chips)]
CKS05	MIL-PRF-123/1		C = solder over Cu, 60 microinches minimum	G = Silver/Nickel/Gold
CKS06	MIL-PRF-123/2		W = solder over Cu clad steel, 60 microinches minimum	M = Palladium/Silver alloy
CKS07	MIL-PRF-123/3			S = Guarded, solder-coated
CKS11	MIL-PRF-123/4			
CKS12	MIL-PRF-123/5			
CKS14	MIL-PRF-123/6			
CKS15	MIL-PRF-123/7			
CKS16	MIL-PRF-123/8			
CKS51	MIL-PRF-123/10			
CKS52	MIL-PRF-123/11			
CKS53	MIL-PRF-123/12			
CKS54	MIL-PRF-123/13			
CKS22	MIL-PRF-123/14			
CKS23	MIL-PRF-123/16			
CKS24	MIL-PRF-123/17			

Note: A "guarded" termination is one in which the interelectrode metallization is separated from the final finish by a barrier or guard metal; e.g., copper or nickel, etc.

Temperature Characteristic at Rated Voltage		Capacitance Tolerance		Rated Voltage
BP = +/- 30 ppm/deg.C		C = +/- 0.25 %		B = 50 V
BX = + 15%, -25%		D = +/- 0.50 %		C = 100 V
BR = + 15%, -40%		F = +/- 1.0 %		D = 200 V
		J = +/- 5.0 %		
		K = +/- 10.0 %		

Capacitor Values:

Capacitance values in picofarads are contained in the following listing. When ordering, the first two digits represent significant figures and the last digit specifies the number of zeroes to follow. For example 101 indicates 100 pF and 102 indicates 1000 pF. The letter "R" shall be used to indicate a decimal point when required. For example 1R0 indicates 1.0 pF.

MIL-PRF-123, CAPACITORS

Axial Lead, Multiple Layer, Fixed, Ceramic Dielectric, Space Level

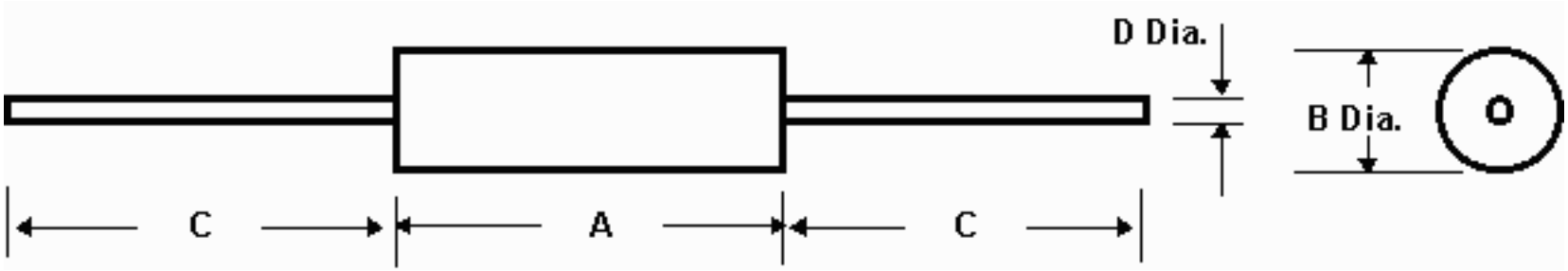

All dimensions are in inches

Style	A	B	C	D
CKS11	0.160+/-0.010	0.090+/-0.010	1.250 min.	0.020+/-0.002
CKS12	0.250+/-0.010	0.090+/-0.010	1.250 min.	0.020+/-0.002
CKS14	0.390+/-0.010	0.140+/-0.010	1.250 min.	0.025+/-0.002
CKS15	0.500+/-0.020	0.250+/-0.020	1.250 min.	0.025+/-0.002
CKS16	0.690+/-0.020	0.350+/-0.020	1.250 min.	0.025+/-0.002

MIL-PRF-123, CAPACITORS

Chip, Multiple Layer, Fixed, Unencapsulated, Ceramic Dielectric, Space Level

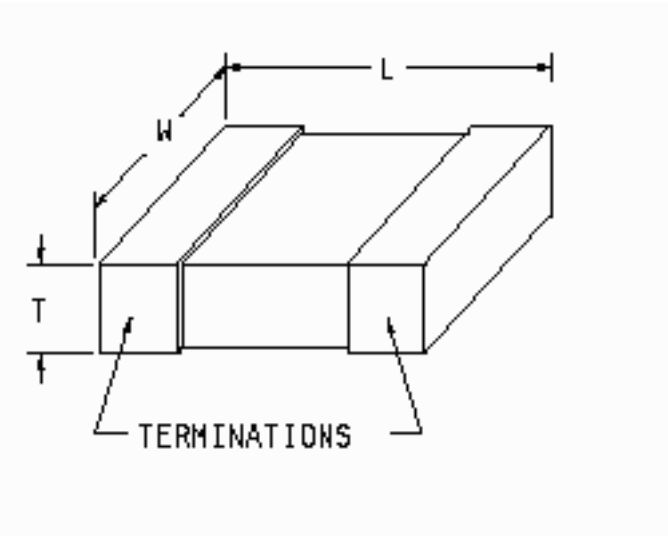

Physical Dimensions Table

			Length (inches)			Width (inches)			Thickness (inches)
CKS	Nominal	Tol. Bare Chip	Tol. Solder Coated	Nominal	Tol. Bare Chip	Tol. Solder Coated	Min.	Max.	Max. Solder Coated
51	0.080	+/-0.015	+0.035, -0.015	0.050	+/-0.015	+0.030, -0.015	0.020	0.055	0.070
52	0.120	+/-0.015	+0.040, -0.015	0.100	+/-0.015	+0.030, -0.015	0.020	0.065	0.080
53	0.180	+/-0.015	+0.040, -0.015	0.080	+/-0.015	+0.030, -0.015	0.020	0.065	0.080
54	0.220	+/-0.015	+0.040, -0.015	0.250	+/-0.015	+0.030, -0.015	0.020	0.070	0.085

MIL-PRF-123, CAPACITORS

Dual In-Line Package (DIP), Multiple Layer, Fixed, Ceramic Dielectric, Space Level

Style CKS22

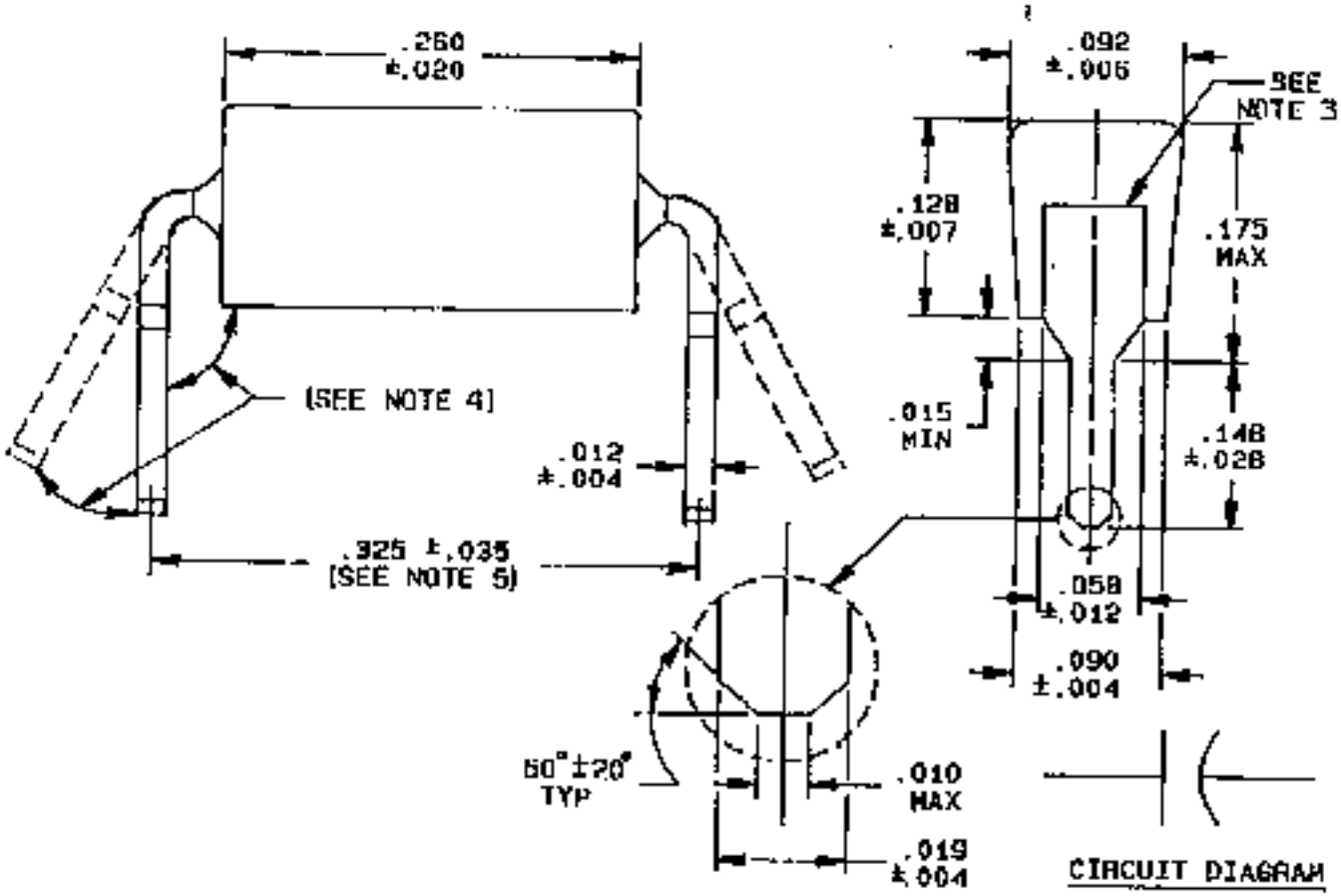
.260
±.020
(SEE NOTE 4)
.012
±.004
.325 ±.035
(SEE NOTE 5)
.092
±.005
SEE
NOTE 3
.128
±.007
.175
MAX
.015
MIN
.148
±.028
.058
±.012
.090
±.004
60°±20°
TYP
.010
MAX
.019
±.004
CIRCUIT DIAGRAM

Style CKS23

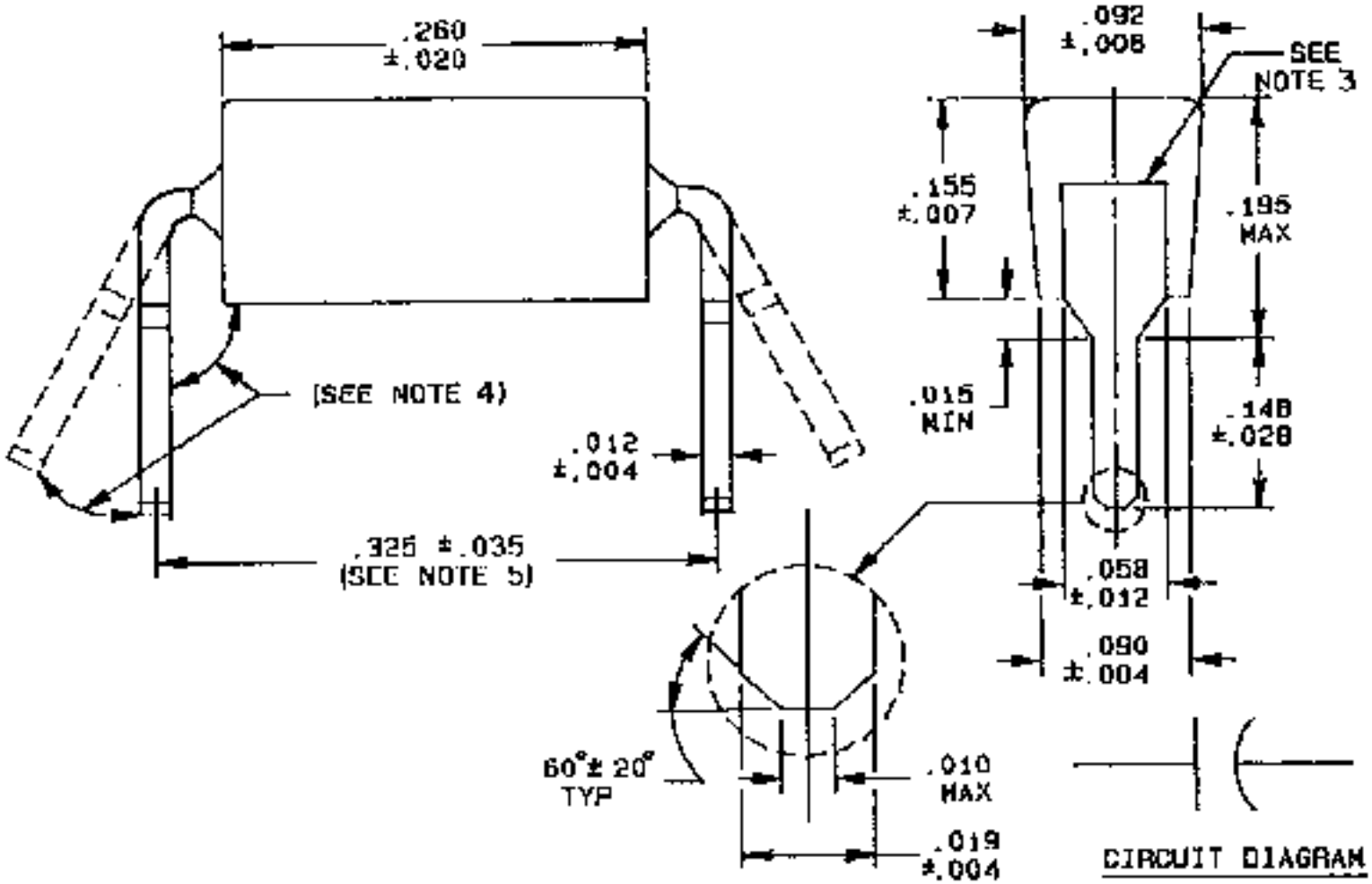
.260
±.020
.092
±.008
SEE
NOTE 3
.155
±.007
.195
MAX
(SEE NOTE 4)
.015
MIN
.148
±.028
.012
±.004
.325 ±.035
(SEE NOTE 5)
.058
±.012
.090
±.004
60°± 20°
TYP
.010
MAX
.019
±.004
CIRCUIT DIAGRAM

Style CKS24

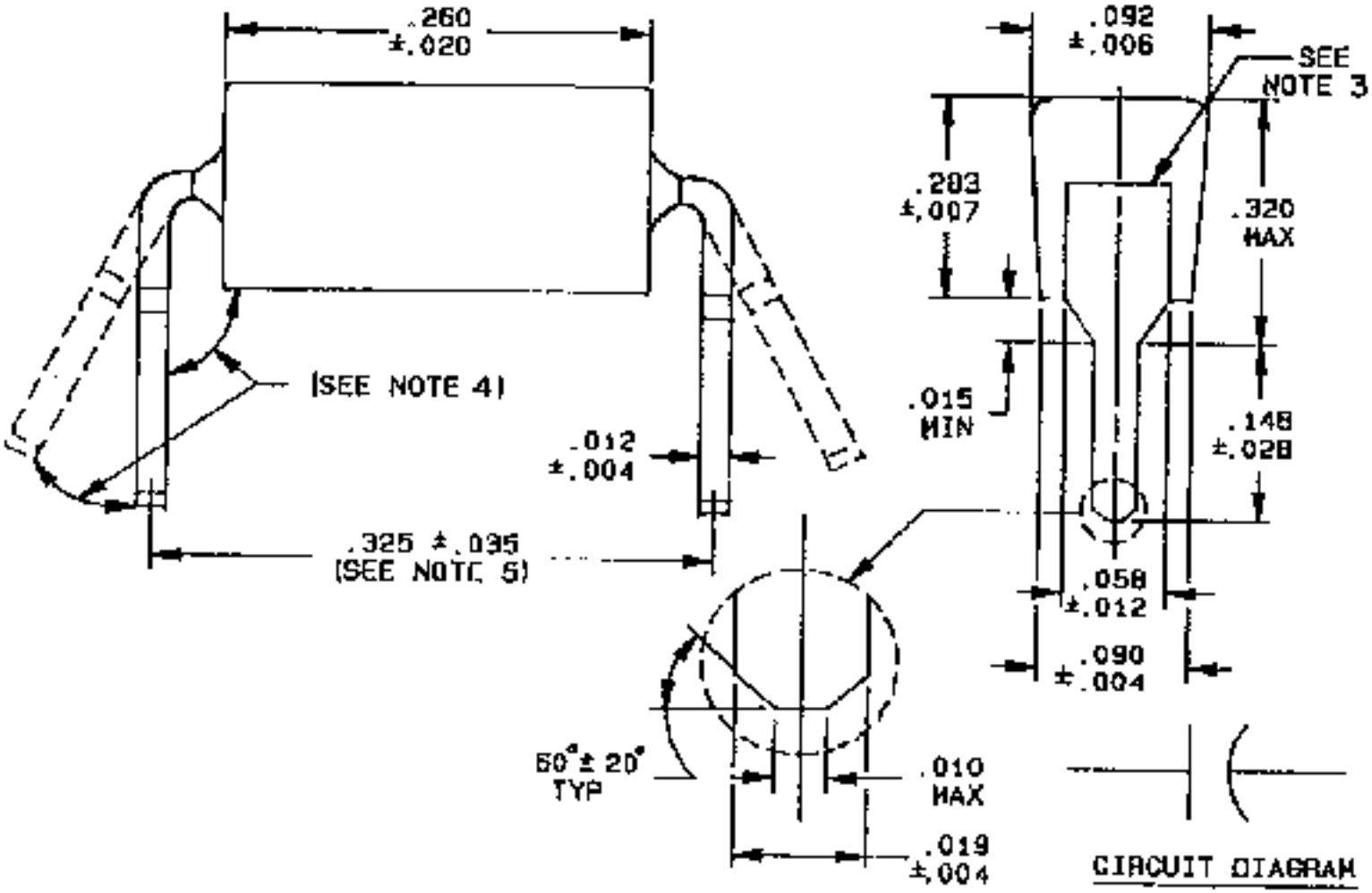
.260
±.020
.092
±.006
SEE
NOTE 3
.203
±.007
.320
MAX
(SEE NOTE 4)
.015
MIN
.148
±.028
.012
±.004
.325 ±.035
(SEE NOTE 5)
.058
±.012
.090
±.004
60° ± 20°
TYP
.010
MAX
.019
±.004
CIRCUIT DIAGRAM

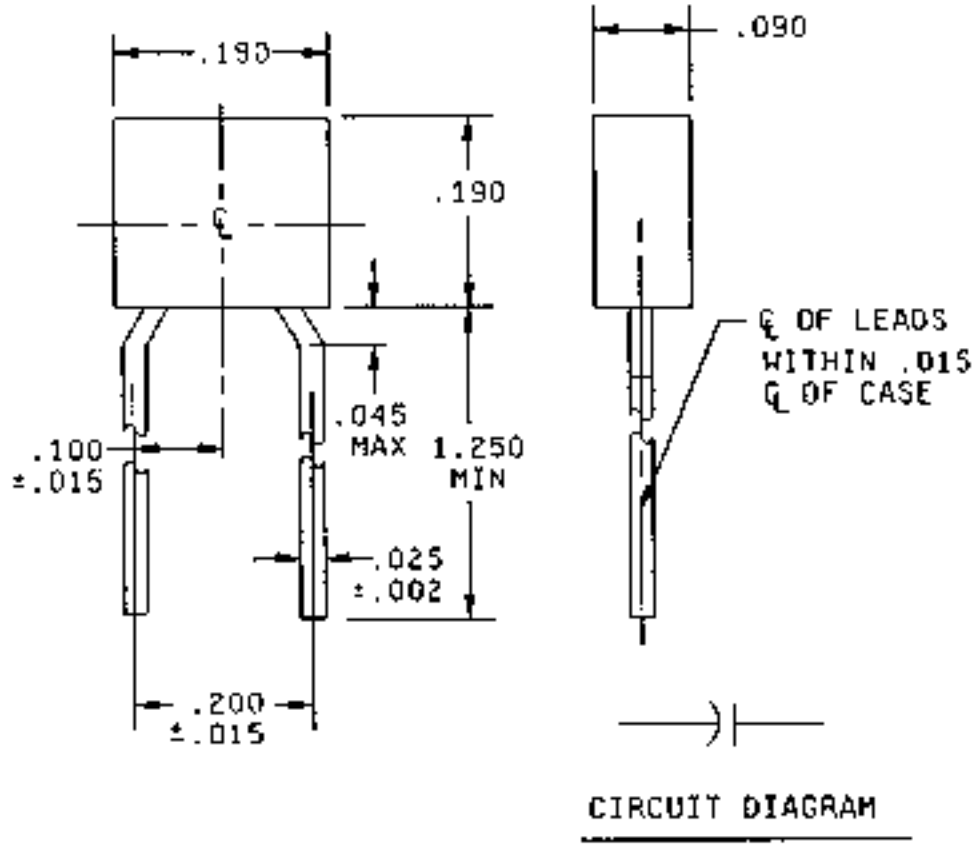

Inches	mm	Inches	mm
.002	0.05	.100	2.54
.015	0.38	.190	4.83
.025	0.64	.200	5.08
.045	1.14	1.250	31.75
.090	2.29		

Style CKS06

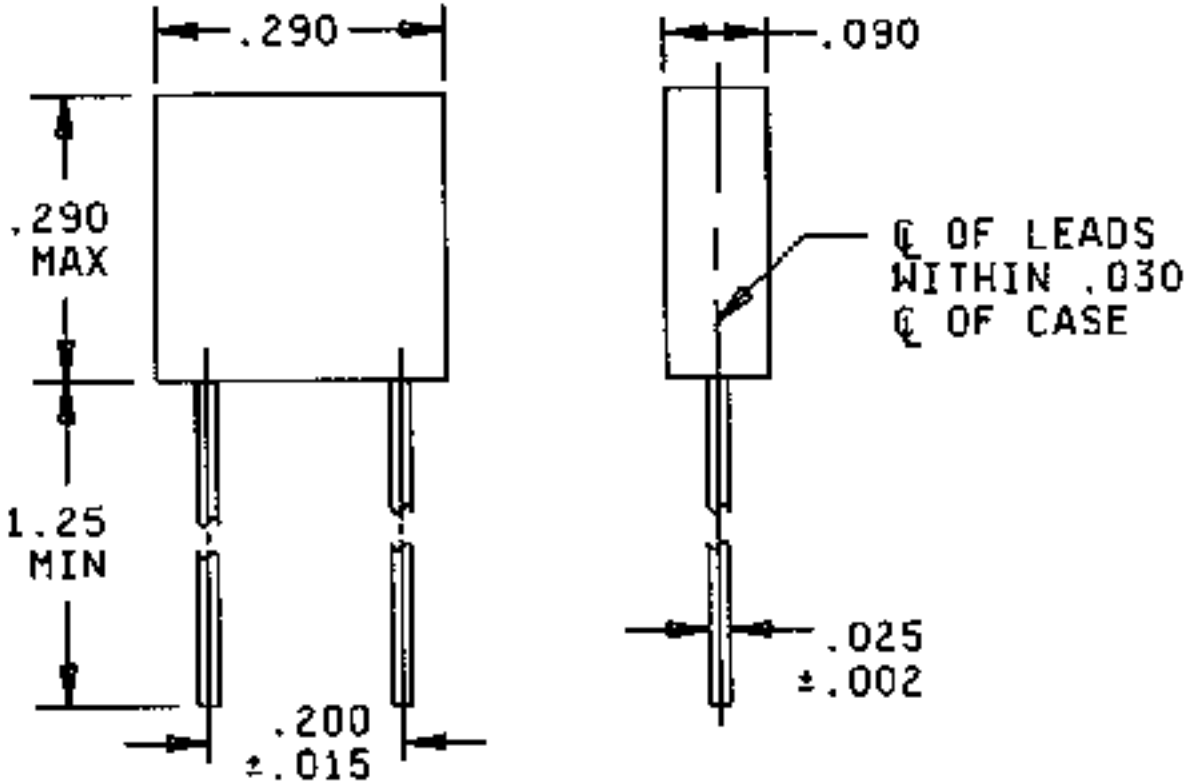

Inches	mm
.002	0.05
.015	0.38
.025	0.64
.030	0.76
.090	2.29
.200	5.08
.290	7.37
1.25	31.75

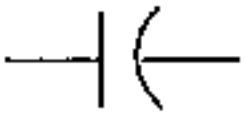

CIRCUIT DIAGRAM

Style CKS07

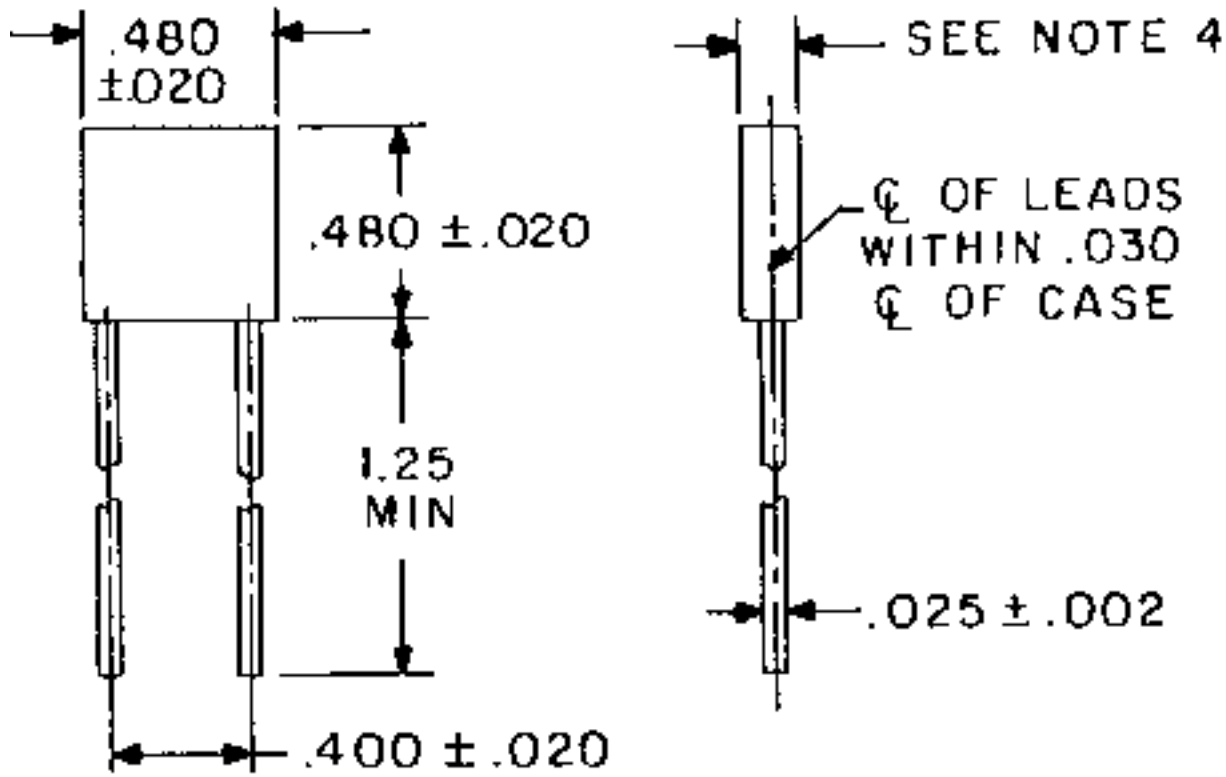

Inches	mm	Inches	mm
.002	0.05	.400	10.16
.020	0.51	.480	12.19
.025	0.64	1.25	31.8
.030	0.76		

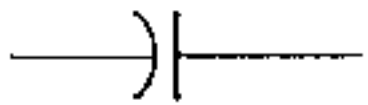

CIRCUIT DIAGRAM

Notes:

All dimensions are in inches.

Metric equivalents are given for general information only.

Unless otherwise specified, tolerance is +/-0.010 inches.

For CKS07 capacitors, the thickness shall be 0.200 inches maximum for capacitance values of 82000, 91000, and 100000 pF in BP dielectric, and 0.140+/-0.010 inches for all others.

CKS05 Ceramic Capacitors

	Capacitance	Rated	Capacitance	Termination		
Part Number	Value (pF)	Voltage (V)	Tolerance (%)	Finish (#)	Level	Manufacturer
M123A01BPC4R7%C	4.7	100	C, D	C	1 or 2	AVX, KEM
M123A01BPC5R1%C	5.1	100	C, D	C	1 or 2	AVX, KEM
M123A01BPC5R6%C	5.6	100	C, D	C	1 or 2	AVX, KEM
M123A01BPC6R2%C	6.2	100	C, D	C	1 or 2	AVX, KEM
M123A01BPC6R8%C	6.8	100	C, D	C	1 or 2	AVX, KEM
M123A01BPC7R5%C	7.5	100	C, D	C	1 or 2	AVX, KEM
M123A01BPC8R2%C	8.2	100	C, D	C	1 or 2	AVX, KEM
M123A01BPC9R1%C	9.1	100	C, D	C	1 or 2	AVX, KEM
M123A01BPC100%C	10	100	C, J, K	C	1 or 2	AVX, KEM
M123A01BPC110%C	11	100	C, J, K	C	1 or 2	AVX, KEM
M123A01BPC120%C	12	100	C, J, K	C	1 or 2	AVX, KEM
M123A01BPC130%C	13	100	C, J, K	C	1 or 2	AVX, KEM
M123A01BPC150%C	15	100	C, J, K	C	1 or 2	AVX, KEM
M123A01BPC160%C	16	100	C, J, K	C	1 or 2	AVX, KEM
M123A01BPC180%C	18	100	C, J, K	C	1 or 2	AVX, KEM
M123A01BPC200%C	20	100	C, J, K	C	1 or 2	AVX, KEM
M123A01BPC220%C	22	100	C, J, K	C	1 or 2	AVX, KEM
M123A01BPC240%C	24	100	C, J, K	C	1 or 2	AVX, KEM
	Capacitance	Rated	Capacitance	Termination		
Part Number	Value (pF)	Voltage (V)	Tolerance (%)	Finish (#)	Level	Manufacturer
M123A01BPC270%C	27	100	F, J, K	C	1 or 2	AVX, KEM
M123A01BPC300%C	30	100	F, J, K	C	1 or 2	AVX, KEM
M123A01BPC330%C	33	100	F, J, K	C	1 or 2	AVX, KEM
M123A01BPC360%C	36	100	F, J, K	C	1 or 2	AVX, KEM
M123A01BPC390%C	39	100	F, J, K	C	1 or 2	AVX, KEM
M123A01BPC430%C	43	100	F, J, K	C	1 or 2	AVX, KEM
M123A01BPC470%C	47	100	F, J, K	C	1 or 2	AVX, KEM
M123A01BPC510%C	51	100	F, J, K	C	1 or 2	AVX, KEM
M123A01BPC560%C	56	100	F, J, K	C	1 or 2	AVX, KEM
M123A01BPC620%C	62	100	F, J, K	C	1 or 2	AVX, KEM
M123A01BPC680%C	68	100	F, J, K	C	1 or 2	AVX, KEM
M123A01BPC750%C	75	100	F, J, K	C	1 or 2	AVX, KEM
M123A01BPC820%C	82	100	F, J, K	C	1 or 2	AVX, KEM
M123A01BPC910%C	91	100	F, J, K	C	1 or 2	AVX, KEM
M123A01BPC101%C	100	100	F, J, K	C	1 or 2	AVX, KEM
M123A01BPC111%C	110	100	F, J, K	C	1 or 2	AVX, KEM
M123A01BPC121%C	120	100	F, J, K	C	1 or 2	AVX, KEM

M123A01BPC131%C	130	100	F, J, K	C	1 or 2	AVX, KEM
	Capacitance	Rated	Capacitance	Termination		
Part Number	Value (pF)	Voltage (V)	Tolerance (%)	Finish (#)	Level	Manufacturer
M123A01BPC151%C	150	100	F, J, K	C	1 or 2	AVX, KEM
M123A01BPC161%C	160	100	F, J, K	C	1 or 2	AVX, KEM
M123A01BPC181%C	180	100	F, J, K	C	1 or 2	AVX, KEM
M123A01BPC201%C	200	100	F, J, K	C	1 or 2	AVX, KEM
M123A01BPC221%C	220	100	F, J, K	C	1 or 2	AVX, KEM
M123A01BPC241%C	240	100	F, J, K	C	1 or 2	AVX, KEM
M123A01BPB271%C	270	50	F, J, K	C	1 or 2	AVX, KEM
M123A01BPB301%C	300	50	F, J, K	C	1 or 2	AVX, KEM
M123A01BPB331%C	330	50	F, J, K	C	1 or 2	AVX, KEM
M123A01BPB361%C	360	50	F, J, K	C	1 or 2	AVX, KEM
M123A01BPB391%C	390	50	F, J, K	C	1 or 2	AVX, KEM
M123A01BPB431%C	430	50	F, J, K	C	1 or 2	AVX, KEM
M123A01BPB471%C	470	50	F, J, K	C	1 or 2	AVX, KEM
M123A01BPB511%C	510	50	F, J, K	C	1 or 2	AVX, KEM
M123A01BPB561%C	560	50	F, J, K	C	1 or 2	AVX, KEM
M123A01BPB621%C	620	50	F, J, K	C	1 or 2	AVX, KEM
M123A01BPB681%C	680	50	F, J, K	C	1 or 2	AVX, KEM
M123A01BPB751%C	750	50	F, J, K	C	1 or 2	AVX, KEM
	Capacitance	Rated	Capacitance	Termination		
Part Number	Value (pF)	Voltage (V)	Tolerance (%)	Finish (#)	Level	Manufacturer
M123A01BPB821%C	820	50	F, J, K	C	1 or 2	AVX, KEM
M123A01BPB911%C	910	50	F, J, K	C	1 or 2	AVX, KEM
M123A01BPB102%C	1000	50	F, J, K	C	1 or 2	AVX, KEM
M123A01BPB112%C	1100	50	F, J, K	C	1 or 2	AVX, KEM
M123A01BPB122%C	1200	50	F, J, K	C	1 or 2	AVX, KEM
M123A01BPB132%C	1300	50	F, J, K	C	1 or 2	AVX, KEM
M123A01BPB152%C	1500	50	F, J, K	C	1 or 2	AVX, KEM
M123A01BPB162%C	1600	50	F, J, K	C	1 or 2	AVX, KEM
M123A01BPB182%C	1800	50	F, J, K	C	1 or 2	AVX, KEM
M123A01BPB202%C	2000	50	F, J, K	C	1 or 2	AVX, KEM
M123A01BPB222%C	2200	50	F, J, K	C	1 or 2	AVX, KEM
M123A01BPB242%C	2400	50	F, J, K	C	1 or 2	AVX, KEM
M123A01BPB272%C	2700	50	F, J, K	C	1 or 2	AVX, KEM
M123A01BXC271KC	270	100	K	C	1 or 2	AVX, KEM
M123A01BXC331KC	330	100	K	C	1 or 2	AVX, KEM
M123A01BXC391KC	390	100	K	C	1 or 2	AVX, KEM
M123A01BXC471KC	470	100	K	C	1 or 2	AVX, KEM
M123A01BXC561KC	560	100	K	C	1 or 2	AVX, KEM
	Capacitance	Rated	Capacitance	Termination		
Part Number	Value (pF)	Voltage (V)	Tolerance (%)	Finish (#)	Level	Manufacturer
M123A01BXC681KC	680	100	K	C	1 or 2	AVX, KEM
M123A01BXC821KC	820	100	K	C	1 or 2	AVX, KEM
M123A01BXC102KC	1000	100	K	C	1 or 2	AVX, KEM
M123A01BXC122KC	1200	100	K	C	1 or 2	AVX, KEM

M123A01BXC152KC	1500	100	K	C	1 or 2	AVX, KEM
M123A01BXC182KC	1800	100	K	C	1 or 2	AVX, KEM
M123A01BXC222KC	2200	100	K	C	1 or 2	AVX, KEM
M123A01BXC272KC	2700	100	K	C	1 or 2	AVX, KEM
M123A01BXC332KC	3300	100	K	C	1 or 2	AVX, KEM
M123A01BXC392KC	3900	100	K	C	1 or 2	AVX, KEM
M123A01BXC472KC	4700	100	K	C	1 or 2	AVX, KEM
M123A01BXB562KC	5600	50	K	C	1 or 2	AVX, KEM
M123A01BXB682KC	6800	50	K	C	1 or 2	AVX, KEM
M123A01BXB822KC	8200	50	K	C	1 or 2	AVX, KEM
M123A01BXB103KC	10000	50	K	C	1 or 2	AVX, KEM
	Capacitance	Rated	Capacitance	Termination		
Part Number	Value (pF)	Voltage (V)	Tolerance (%)	Finish (#)	Level	Manufacturer

CKS05 Ceramic Capacitors

	Capacitance	Rated	Capacitance	Termination		
Part Number	Value (pF)	Voltage (V)	Tolerance (%)	Finish (#)	Level	Manufacturer
M123A01BPC4R7%C	4.7	100	C, D	C	1 or 2	AVX, KEM
M123A01BPC5R1%C	5.1	100	C, D	C	1 or 2	AVX, KEM
M123A01BPC5R6%C	5.6	100	C, D	C	1 or 2	AVX, KEM
M123A01BPC6R2%C	6.2	100	C, D	C	1 or 2	AVX, KEM
M123A01BPC6R8%C	6.8	100	C, D	C	1 or 2	AVX, KEM
M123A01BPC7R5%C	7.5	100	C, D	C	1 or 2	AVX, KEM
M123A01BPC8R2%C	8.2	100	C, D	C	1 or 2	AVX, KEM
M123A01BPC9R1%C	9.1	100	C, D	C	1 or 2	AVX, KEM
M123A01BPC100%C	10	100	C, J, K	C	1 or 2	AVX, KEM
M123A01BPC110%C	11	100	C, J, K	C	1 or 2	AVX, KEM
M123A01BPC120%C	12	100	C, J, K	C	1 or 2	AVX, KEM
M123A01BPC130%C	13	100	C, J, K	C	1 or 2	AVX, KEM
M123A01BPC150%C	15	100	C, J, K	C	1 or 2	AVX, KEM
M123A01BPC160%C	16	100	C, J, K	C	1 or 2	AVX, KEM
M123A01BPC180%C	18	100	C, J, K	C	1 or 2	AVX, KEM
M123A01BPC200%C	20	100	C, J, K	C	1 or 2	AVX, KEM
M123A01BPC220%C	22	100	C, J, K	C	1 or 2	AVX, KEM
M123A01BPC240%C	24	100	C, J, K	C	1 or 2	AVX, KEM
	Capacitance	Rated	Capacitance	Termination		
Part Number	Value (pF)	Voltage (V)	Tolerance (%)	Finish (#)	Level	Manufacturer
M123A01BPC270%C	27	100	F, J, K	C	1 or 2	AVX, KEM
M123A01BPC300%C	30	100	F, J, K	C	1 or 2	AVX, KEM
M123A01BPC330%C	33	100	F, J, K	C	1 or 2	AVX, KEM
M123A01BPC360%C	36	100	F, J, K	C	1 or 2	AVX, KEM
M123A01BPC390%C	39	100	F, J, K	C	1 or 2	AVX, KEM
M123A01BPC430%C	43	100	F, J, K	C	1 or 2	AVX, KEM
M123A01BPC470%C	47	100	F, J, K	C	1 or 2	AVX, KEM

M123A01BPC510%C	51	100	F, J, K	C	1 or 2	AVX, KEM
M123A01BPC560%C	56	100	F, J, K	C	1 or 2	AVX, KEM
M123A01BPC620%C	62	100	F, J, K	C	1 or 2	AVX, KEM
M123A01BPC680%C	68	100	F, J, K	C	1 or 2	AVX, KEM
M123A01BPC750%C	75	100	F, J, K	C	1 or 2	AVX, KEM
M123A01BPC820%C	82	100	F, J, K	C	1 or 2	AVX, KEM
M123A01BPC910%C	91	100	F, J, K	C	1 or 2	AVX, KEM
M123A01BPC101%C	100	100	F, J, K	C	1 or 2	AVX, KEM
M123A01BPC111%C	110	100	F, J, K	C	1 or 2	AVX, KEM
M123A01BPC121%C	120	100	F, J, K	C	1 or 2	AVX, KEM
M123A01BPC131%C	130	100	F, J, K	C	1 or 2	AVX, KEM
	Capacitance	Rated	Capacitance	Termination		
Part Number	Value (pF)	Voltage (V)	Tolerance (%)	Finish (#)	Level	Manufacturer
M123A01BPC151%C	150	100	F, J, K	C	1 or 2	AVX, KEM
M123A01BPC161%C	160	100	F, J, K	C	1 or 2	AVX, KEM
M123A01BPC181%C	180	100	F, J, K	C	1 or 2	AVX, KEM
M123A01BPC201%C	200	100	F, J, K	C	1 or 2	AVX, KEM
M123A01BPC221%C	220	100	F, J, K	C	1 or 2	AVX, KEM
M123A01BPC241%C	240	100	F, J, K	C	1 or 2	AVX, KEM
M123A01BPB271%C	270	50	F, J, K	C	1 or 2	AVX, KEM
M123A01BPB301%C	300	50	F, J, K	C	1 or 2	AVX, KEM
M123A01BPB331%C	330	50	F, J, K	C	1 or 2	AVX, KEM
M123A01BPB361%C	360	50	F, J, K	C	1 or 2	AVX, KEM
M123A01BPB391%C	390	50	F, J, K	C	1 or 2	AVX, KEM
M123A01BPB431%C	430	50	F, J, K	C	1 or 2	AVX, KEM
M123A01BPB471%C	470	50	F, J, K	C	1 or 2	AVX, KEM
M123A01BPB511%C	510	50	F, J, K	C	1 or 2	AVX, KEM
M123A01BPB561%C	560	50	F, J, K	C	1 or 2	AVX, KEM
M123A01BPB621%C	620	50	F, J, K	C	1 or 2	AVX, KEM
M123A01BPB681%C	680	50	F, J, K	C	1 or 2	AVX, KEM
M123A01BPB751%C	750	50	F, J, K	C	1 or 2	AVX, KEM
	Capacitance	Rated	Capacitance	Termination		
Part Number	Value (pF)	Voltage (V)	Tolerance (%)	Finish (#)	Level	Manufacturer
M123A01BPB821%C	820	50	F, J, K	C	1 or 2	AVX, KEM
M123A01BPB911%C	910	50	F, J, K	C	1 or 2	AVX, KEM
M123A01BPB102%C	1000	50	F, J, K	C	1 or 2	AVX, KEM
M123A01BPB112%C	1100	50	F, J, K	C	1 or 2	AVX, KEM
M123A01BPB122%C	1200	50	F, J, K	C	1 or 2	AVX, KEM
M123A01BPB132%C	1300	50	F, J, K	C	1 or 2	AVX, KEM
M123A01BPB152%C	1500	50	F, J, K	C	1 or 2	AVX, KEM
M123A01BPB162%C	1600	50	F, J, K	C	1 or 2	AVX, KEM
M123A01BPB182%C	1800	50	F, J, K	C	1 or 2	AVX, KEM
M123A01BPB202%C	2000	50	F, J, K	C	1 or 2	AVX, KEM
M123A01BPB222%C	2200	50	F, J, K	C	1 or 2	AVX, KEM
M123A01BPB242%C	2400	50	F, J, K	C	1 or 2	AVX, KEM
M123A01BPB272%C	2700	50	F, J, K	C	1 or 2	AVX, KEM
M123A01BXC271KC	270	100	K	C	1 or 2	AVX, KEM

M123A01BXC331KC	330	100	K	C	1 or 2	AVX, KEM
M123A01BXC391KC	390	100	K	C	1 or 2	AVX, KEM
M123A01BXC471KC	470	100	K	C	1 or 2	AVX, KEM
M123A01BXC561KC	560	100	K	C	1 or 2	AVX, KEM
	Capacitance	Rated	Capacitance	Termination		
Part Number	Value (pF)	Voltage (V)	Tolerance (%)	Finish (#)	Level	Manufacturer
M123A01BXC681KC	680	100	K	C	1 or 2	AVX, KEM
M123A01BXC821KC	820	100	K	C	1 or 2	AVX, KEM
M123A01BXC102KC	1000	100	K	C	1 or 2	AVX, KEM
M123A01BXC122KC	1200	100	K	C	1 or 2	AVX, KEM
M123A01BXC152KC	1500	100	K	C	1 or 2	AVX, KEM
M123A01BXC182KC	1800	100	K	C	1 or 2	AVX, KEM
M123A01BXC222KC	2200	100	K	C	1 or 2	AVX, KEM
M123A01BXC272KC	2700	100	K	C	1 or 2	AVX, KEM
M123A01BXC332KC	3300	100	K	C	1 or 2	AVX, KEM
M123A01BXC392KC	3900	100	K	C	1 or 2	AVX, KEM
M123A01BXC472KC	4700	100	K	C	1 or 2	AVX, KEM
M123A01BXB562KC	5600	50	K	C	1 or 2	AVX, KEM
M123A01BXB682KC	6800	50	K	C	1 or 2	AVX, KEM
M123A01BXB822KC	8200	50	K	C	1 or 2	AVX, KEM
M123A01BXB103KC	10000	50	K	C	1 or 2	AVX, KEM
	Capacitance	Rated	Capacitance	Termination		
Part Number	Value (pF)	Voltage (V)	Tolerance (%)	Finish (#)	Level	Manufacturer

CKS06 Ceramic Capacitors

	Capacitance	Rated	Capacitance	Termination		
Part Number	Value (pF)	Voltage (V)	Tolerance (%)	Finish (#)	Level	Manufacturer
M123A02BPC271%C	270	100	F, J, K	C	1 or 2	AVX, KEM
M123A02BPC301%C	300	100	F, J, K	C	1 or 2	AVX, KEM
M123A02BPC331%C	330	100	F, J, K	C	1 or 2	AVX, KEM
M123A02BPC361%C	360	100	F, J, K	C	1 or 2	AVX, KEM
M123A02BPC391%C	390	100	F, J, K	C	1 or 2	AVX, KEM
M123A02BPC431%C	430	100	F, J, K	C	1 or 2	AVX, KEM
M123A02BPC471%C	470	100	F, J, K	C	1 or 2	AVX, KEM
M123A02BPC511%C	510	100	F, J, K	C	1 or 2	AVX, KEM
M123A02BPC561%C	560	100	F, J, K	C	1 or 2	AVX, KEM
M123A02BPC621%C	620	100	F, J, K	C	1 or 2	AVX, KEM
M123A02BPC681%C	680	100	F, J, K	C	1 or 2	AVX, KEM
M123A02BPC751%C	750	100	F, J, K	C	1 or 2	AVX, KEM
M123A02BPC821%C	820	100	F, J, K	C	1 or 2	AVX, KEM
M123A02BPC911%C	910	100	F, J, K	C	1 or 2	AVX, KEM
M123A02BPC102%C	1000	100	F, J, K	C	1 or 2	AVX, KEM
M123A02BPC112%C	1100	100	F, J, K	C	1 or 2	AVX, KEM
M123A02BPC122%C	1200	100	F, J, K	C	1 or 2	AVX, KEM

M123A02BPC132%C	1300	100	F, J, K	C	1 or 2	AVX, KEM
	Capacitance	Rated	Capacitance	Termination		
Part Number	Value (pF)	Voltage (V)	Tolerance (%)	Finish (#)	Level	Manufacturer
M123A02BPC152%C	1500	100	F, J, K	C	1 or 2	AVX, KEM
M123A02BPC162%C	1600	100	F, J, K	C	1 or 2	AVX, KEM
M123A02BPC182%C	1800	100	F, J, K	C	1 or 2	AVX, KEM
M123A02BPC202%C	2000	100	F, J, K	C	1 or 2	AVX, KEM
M123A02BPC222%C	2200	100	F, J, K	C	1 or 2	AVX, KEM
M123A02BPC242%C	2400	100	F, J, K	C	1 or 2	AVX, KEM
M123A02BPB272%C	2700	50	F, J, K	C	1 or 2	AVX, KEM
M123A02BPB302%C	3000	50	F, J, K	C	1 or 2	AVX, KEM
M123A02BPB332%C	3300	50	F, J, K	C	1 or 2	AVX, KEM
M123A02BPB362%C	3600	50	F, J, K	C	1 or 2	AVX, KEM
M123A02BPB392%C	3900	50	F, J, K	C	1 or 2	AVX, KEM
M123A02BPB432%C	4300	50	F, J, K	C	1 or 2	AVX, KEM
M123A02BPB472%C	4700	50	F, J, K	C	1 or 2	AVX, KEM
M123A02BXC562KC	5600	100	K	C	1 or 2	AVX, KEM
M123A02BXC682KC	6800	100	K	C	1 or 2	AVX, KEM
M123A02BXC822KC	8200	100	K	C	1 or 2	AVX, KEM
M123A02BXC103KC	10000	100	K	C	1 or 2	AVX, KEM
M123A02BXC123KC	12000	100	K	C	1 or 2	AVX, KEM
	Capacitance	Rated	Capacitance	Termination		
Part Number	Value (pF)	Voltage (V)	Tolerance (%)	Finish (#)	Level	Manufacturer
M123A02BXC153KC	15000	100	K	C	1 or 2	AVX, KEM
M123A02BXC183KC	18000	100	K	C	1 or 2	AVX, KEM
M123A02BXC223KC	22000	100	K	C	1 or 2	AVX, KEM
M123A02BXC273KC	27000	100	K	C	1 or 2	AVX, KEM
M123A02BXC333KC	33000	100	K	C	1 or 2	AVX, KEM
M123A02BXC393KC	39000	100	K	C	1 or 2	AVX, KEM
M123A02BXC473KC	47000	100	K	C	1 or 2	AVX, KEM
M123A02BXC563KC	56000	100	K	C	1 or 2	AVX, KEM
M123A02BXC683KC	68000	100	K	C	1 or 2	AVX, KEM
M123A02BXC823KC	82000	100	K	C	1 or 2	AVX, KEM
M123A02BXC104KC	100000	100	K	C	1 or 2	AVX, KEM
M123A02BXB563KC	56000	50	K	C	1 or 2	AVX, KEM
M123A02BXB683KC	68000	50	K	C	1 or 2	AVX, KEM
M123A02BXB823KC	82000	50	K	C	1 or 2	AVX, KEM
M123A02BXB104KC	100000	50	K	C	1 or 2	AVX, KEM
M123A02BXB124KC	120000	50	K	C	1 or 2	AVX, KEM
M123A02BXB154KC	150000	50	K	C	1 or 2	AVX, KEM
M123A02BXB184KC	180000	50	K	C	1 or 2	AVX, KEM
	Capacitance	Rated	Capacitance	Termination		
Part Number	Value (pF)	Voltage (V)	Tolerance (%)	Finish (#)	Level	Manufacturer
M123A02BXB224KC	220000	50	K	C	1 or 2	AVX, KEM
M123A02BXB274KC	270000	50	K	C	1 or 2	AVX, KEM
M123A02BXB334KC	330000	50	K	C	1 or 2	AVX, KEM
M123A02BXB394KC	390000	50	K	C	1 or 2	AVX, KEM

M123A02BXB474KC	470000	50	K	C	1 or 2	AVX, KEM
M123A02BXB564KC	560000	50	K	C	1 or 2	KEM
M123A02BXB684KC	680000	50	K	C	1 or 2	KEM
M123A02BXB824KC	820000	50	K	C	1 or 2	KEM
M123A02BXB105KC	1000000	50	K	C	1 or 2	KEM
	Capacitance	Rated	Capacitance	Termination		
Part Number	Value (pF)	Voltage (V)	Tolerance (%)	Finish (#)	Level	Manufacturer

CKS07 Ceramic Capacitors

	Capacitance	Rated	Capacitance	Termination		
Part Number	Value (pF)	Voltage (V)	Tolerance (%)	Finish (#)	Level	Manufacturer
M123A03BPC272%C	2700	100	F, J, K	C	1 or 2	KEM
M123A03BPC302%C	3000	100	F, J, K	C	1 or 2	KEM
M123A03BPC332%C	3300	100	F, J, K	C	1 or 2	KEM
M123A03BPC362%C	3600	100	F, J, K	C	1 or 2	KEM
M123A03BPC392%C	3900	100	F, J, K	C	1 or 2	KEM
M123A03BPC432%C	4300	100	F, J, K	C	1 or 2	KEM
M123A03BPC472%C	4700	100	F, J, K	C	1 or 2	KEM
M123A03BPC512%C	5100	100	F, J, K	C	1 or 2	KEM
M123A03BPC562%C	5600	100	F, J, K	C	1 or 2	KEM
M123A03BPC622%C	6200	100	F, J, K	C	1 or 2	KEM
M123A03BPC682%C	6800	100	F, J, K	C	1 or 2	KEM
M123A03BPC752%C	7500	100	F, J, K	C	1 or 2	KEM
M123A03BPC822%C	8200	100	F, J, K	C	1 or 2	KEM
M123A03BPC912%C	9100	100	F, J, K	C	1 or 2	KEM
M123A03BPC103%C	10000	100	F, J, K	C	1 or 2	KEM
M123A03BPB113%C	11000	50	F, J, K	C	1 or 2	KEM
M123A03BPB123%C	12000	50	F, J, K	C	1 or 2	KEM
M123A03BPB133%C	13000	50	F, J, K	C	1 or 2	KEM
	Capacitance	Rated	Capacitance	Termination		
Part Number	Value (pF)	Voltage (V)	Tolerance (%)	Finish (#)	Level	Manufacturer
M123A03BPB153%C	15000	50	F, J, K	C	1 or 2	KEM
M123A03BPB163%C	16000	50	F, J, K	C	1 or 2	KEM
M123A03BPB183%C	18000	50	F, J, K	C	1 or 2	KEM
M123A03BPB203%C	20000	50	F, J, K	C	1 or 2	KEM
M123A03BPB223%C	22000	50	F, J, K	C	1 or 2	KEM
M123A03BPB243%C	24000	50	F, J, K	C	1 or 2	KEM
M123A03BPB273%C	27000	50	F, J, K	C	1 or 2	KEM
M123A03BPB303%C	30000	50	F, J, K	C	1 or 2	KEM
M123A03BPB333%C	33000	50	F, J, K	C	1 or 2	KEM
M123A03BPB363%C	36000	50	F, J, K	C	1 or 2	KEM
M123A03BPB393%C	39000	50	F, J, K	C	1 or 2	KEM
M123A03BPB433%C	43000	50	F, J, K	C	1 or 2	KEM
M123A03BPB473%C	47000	50	F, J, K	C	1 or 2	KEM

M123A03BPB513%C	51000	50	F, J, K	C	1 or 2	KEM
M123A03BPB563%C	56000	50	F, J, K	C	1 or 2	KEM
M123A03BPB623%C	62000	50	F, J, K	C	1 or 2	KEM
M123A03BPB683%C	68000	50	F, J, K	C	1 or 2	KEM
M123A03BPB753%C	75000	50	F, J, K	C	1 or 2	KEM
	Capacitance	Rated	Capacitance	Termination		
Part Number	Value (pF)	Voltage (V)	Tolerance (%)	Finish (#)	Level	Manufacturer
M123A03BPB823%C	82000	50	F, J, K	C	1 or 2	KEM
M123A03BPB913%C	91000	50	F, J, K	C	1 or 2	KEM
M123A03BPB104%C	100000	50	F, J, K	C	1 or 2	KEM
M123A03BXC563KC	56000	100	K	C	1 or 2	KEM
M123A03BXC683KC	68000	100	K	C	1 or 2	KEM
M123A03BXC823KC	82000	100	K	C	1 or 2	KEM
M123A03BXC104KC	100000	100	K	C	1 or 2	KEM
M123A03BXC124KC	120000	100	K	C	1 or 2	KEM
M123A03BXC154KC	150000	100	K	C	1 or 2	KEM
M123A03BXC184KC	180000	100	K	C	1 or 2	KEM
M123A03BXC224KC	220000	100	K	C	1 or 2	KEM
M123A03BXC274KC	270000	100	K	C	1 or 2	KEM
M123A03BXC334KC	330000	100	K	C	1 or 2	KEM
M123A03BXC394KC	390000	100	K	C	1 or 2	KEM
M123A03BXC474KC	470000	100	K	C	1 or 2	KEM
M123A03BXB564KC	560000	50	K	C	1 or 2	KEM
M123A03BXB684KC	680000	50	K	C	1 or 2	KEM
M123A03BXB824KC	820000	50	K	C	1 or 2	KEM
M123A03BXB105KC	1000000	50	K	C	1 or 2	KEM
	Capacitance	Rated	Capacitance	Termination		
Part Number	Value (pF)	Voltage (V)	Tolerance (%)	Finish (#)	Level	Manufacturer

CKS11 Ceramic Capacitors

	Capacitance	Rated	Capacitance	Termination		
Part Number	Value (pF)	Voltage (V)	Tolerance (%)	Finish (#)	Level	Manufacturer
M123A04BPC4R7%W	4.7	100	C, D	W	1 or 2	AVX, KEM
M123A04BPC5R1%W	5.1	100	C, D	W	1 or 2	AVX, KEM
M123A04BPC6R2%W	6.2	100	C, D	W	1 or 2	AVX, KEM
M123A04BPC6R8%W	6.8	100	C, D	W	1 or 2	AVX, KEM
M123A04BPC7R5%W	7.5	100	C, D	W	1 or 2	AVX, KEM
M123A04BPC8R2%W	8.2	100	C, D	W	1 or 2	AVX, KEM
M123A04BPC9R1%W	9.1	100	C, D	W	1 or 2	AVX, KEM
M123A04BPC100%W	10	100	C, J, K	W	1 or 2	AVX, KEM
M123A04BPC110%W	11	100	C, J, K	W	1 or 2	AVX, KEM
M123A04BPC120%W	12	100	C, J, K	W	1 or 2	AVX, KEM
M123A04BPC130%W	13	100	C, J, K	W	1 or 2	AVX, KEM
M123A04BPC150%W	15	100	C, J, K	W	1 or 2	AVX, KEM

M123A04BPC160%W	16	100	C, J, K	W	1 or 2	AVX, KEM
M123A04BPC180%W	18	100	C, J, K	W	1 or 2	AVX, KEM
M123A04BPC200%W	20	100	C, J, K	W	1 or 2	AVX, KEM
M123A04BPC220%W	22	100	C, J, K	W	1 or 2	AVX, KEM
M123A04BPC240%W	24	100	C, J, K	W	1 or 2	AVX, KEM
M123A04BPC270%W	27	100	C, J, K	W	1 or 2	AVX, KEM
	Capacitance	Rated	Capacitance	Termination		
Part Number	Value (pF)	Voltage (V)	Tolerance (%)	Finish (#)	Level	Manufacturer
M123A04BPC300%W	30	100	C, J, K	W	1 or 2	AVX, KEM
M123A04BPC330%W	33	100	C, J, K	W	1 or 2	AVX, KEM
M123A04BPC360%W	36	100	C, J, K	W	1 or 2	AVX, KEM
M123A04BPC390%W	39	100	C, J, K	W	1 or 2	AVX, KEM
M123A04BPC430%W	43	100	C, J, K	W	1 or 2	AVX, KEM
M123A04BPC470%W	47	100	C, J, K	W	1 or 2	AVX, KEM
M123A04BPC510%W	51	100	C, J, K	W	1 or 2	AVX, KEM
M123A04BPC560%W	56	100	C, J, K	W	1 or 2	AVX, KEM
M123A04BPC620%W	62	100	C, J, K	W	1 or 2	AVX, KEM
M123A04BPC680%W	68	100	C, J, K	W	1 or 2	AVX, KEM
M123A04BPC750%W	75	100	C, J, K	W	1 or 2	AVX, KEM
M123A04BPC820%W	82	100	C, J, K	W	1 or 2	AVX, KEM
M123A04BPC910%W	91	100	C, J, K	W	1 or 2	AVX, KEM
M123A04BPC101%W	100	100	C, J, K	W	1 or 2	AVX, KEM
M123A04BPB111%W	110	50	F, J, K	W	1 or 2	AVX, KEM
M123A04BPB121%W	120	50	F, J, K	W	1 or 2	AVX, KEM
M123A04BPB131%W	130	50	F, J, K	W	1 or 2	AVX, KEM
M123A04BPB151%W	150	50	F, J, K	W	1 or 2	AVX, KEM
	Capacitance	Rated	Capacitance	Termination		
Part Number	Value (pF)	Voltage (V)	Tolerance (%)	Finish (#)	Level	Manufacturer
M123A04BPB161%W	160	50	F, J, K	W	1 or 2	AVX, KEM
M123A04BPB181%W	180	50	F, J, K	W	1 or 2	AVX, KEM
M123A04BPB201%W	200	50	F, J, K	W	1 or 2	AVX, KEM
M123A04BPB221%W	220	50	F, J, K	W	1 or 2	AVX, KEM
M123A04BPB241%W	240	50	F, J, K	W	1 or 2	AVX, KEM
M123A04BPB271%W	270	50	F, J, K	W	1 or 2	AVX, KEM
M123A04BPB301%W	300	50	F, J, K	W	1 or 2	AVX, KEM
M123A04BPB331%W	330	50	F, J, K	W	1 or 2	AVX, KEM
M123A04BPB361%W	360	50	F, J, K	W	1 or 2	AVX, KEM
M123A04BPB391%W	390	50	F, J, K	W	1 or 2	AVX, KEM
M123A04BPB431%W	430	50	F, J, K	W	1 or 2	AVX, KEM
M123A04BPB471%W	470	50	F, J, K	W	1 or 2	AVX, KEM
M123A04BPB511%W	510	50	F, J, K	W	1 or 2	AVX, KEM
M123A04BPB561%W	560	50	F, J, K	W	1 or 2	AVX, KEM
M123A04BXC101KW	100	100	K	W	1 or 2	AVX, KEM
M123A04BXC121KW	120	100	K	W	1 or 2	AVX, KEM
M123A04BXC151KW	150	100	K	W	1 or 2	AVX, KEM
M123A04BXC181KW	180	100	K	W	1 or 2	AVX, KEM
	Capacitance	Rated	Capacitance	Termination		

Part Number	Value (pF)	Voltage (V)	Tolerance (%)	Finish (#)	Level	Manufacturer
M123A04BXC221KW	220	100	K	W	1 or 2	AVX, KEM
M123A04BXC271KW	270	100	K	W	1 or 2	AVX, KEM
M123A04BXC331KW	330	100	K	W	1 or 2	AVX, KEM
M123A04BXC291KW	290	100	K	W	1 or 2	AVX, KEM
M123A04BXC471KW	470	100	K	W	1 or 2	AVX, KEM
M123A04BXC561KW	560	100	K	W	1 or 2	AVX, KEM
M123A04BXC681KW	680	100	K	W	1 or 2	AVX, KEM
M123A04BXC821KW	820	100	K	W	1 or 2	AVX, KEM
M123A04BXC102KW	1000	100	K	W	1 or 2	AVX, KEM
M123A04BXB122KW	1200	50	K	W	1 or 2	AVX, KEM
M123A04BXB152KW	1500	50	K	W	1 or 2	AVX, KEM
M123A04BXB182KW	1800	50	K	W	1 or 2	AVX, KEM
M123A04BXB222KW	2200	50	K	W	1 or 2	AVX, KEM
M123A04BXB272KW	2700	50	K	W	1 or 2	AVX, KEM
M123A04BXB332KW	3300	50	K	W	1 or 2	AVX, KEM
M123A04BXB392KW	3900	50	K	W	1 or 2	AVX, KEM
M123A04BXB472KW	4700	50	K	W	1 or 2	AVX, KEM
	Capacitance	Rated	Capacitance	Termination		
Part Number	Value (pF)	Voltage (V)	Tolerance (%)	Finish (#)	Level	Manufacturer

CKS12 Ceramic Capacitors

	Capacitance	Rated	Capacitance	Termination		
Part Number	Value (pF)	Voltage (V)	Tolerance (%)	Finish (#)	Level	Manufacturer
M123A05BPC111%W	110	100	F, J, K	W	1 or 2	AVX, KEM
M123A05BPC121%W	120	100	F, J, K	W	1 or 2	AVX, KEM
M123A05BPC131%W	130	100	F, J, K	W	1 or 2	AVX, KEM
M123A05BPC151%W	150	100	F, J, K	W	1 or 2	AVX, KEM
M123A05BPC161%W	160	100	F, J, K	W	1 or 2	AVX, KEM
M123A05BPC181%W	180	100	F, J, K	W	1 or 2	AVX, KEM
M123A05BPC201%W	200	100	F, J, K	W	1 or 2	AVX, KEM
M123A05BPC221%W	220	100	F, J, K	W	1 or 2	AVX, KEM
M123A05BPB241%W	240	50	F, J, K	W	1 or 2	AVX, KEM
M123A05BPB271%W	270	50	F, J, K	W	1 or 2	AVX, KEM
M123A05BPB301%W	300	50	F, J, K	W	1 or 2	AVX, KEM
M123A05BPB331%W	330	50	F, J, K	W	1 or 2	AVX, KEM
M123A05BPB361%W	360	50	F, J, K	W	1 or 2	AVX, KEM
M123A05BPB391%W	390	50	F, J, K	W	1 or 2	AVX, KEM
M123A05BPB431%W	430	50	F, J, K	W	1 or 2	AVX, KEM
M123A05BPB471%W	470	50	F, J, K	W	1 or 2	AVX, KEM
M123A05BXC122KW	1200	100	K	W	1 or 2	AVX, KEM
M123A05BXC152KW	1500	100	K	W	1 or 2	AVX, KEM
	Capacitance	Rated	Capacitance	Termination		
Part Number	Value (pF)	Voltage (V)	Tolerance (%)	Finish (#)	Level	Manufacturer

M123A05BXC182KW	1800	100	K	W	1 or 2	AVX, KEM
M123A05BXC222KW	2200	100	K	W	1 or 2	AVX, KEM
M123A05BXC272KW	2700	100	K	W	1 or 2	AVX, KEM
M123A05BXC332KW	3300	100	K	W	1 or 2	AVX, KEM
M123A05BXC392KW	3900	100	K	W	1 or 2	AVX, KEM
M123A05BXC472KW	4700	100	K	W	1 or 2	AVX, KEM
M123A05BXB562KW	5600	50	K	W	1 or 2	AVX, KEM
M123A05BXB682KW	6800	50	K	W	1 or 2	AVX, KEM
M123A05BXB822KW	8200	50	K	W	1 or 2	AVX, KEM
M123A05BXB103KW	10000	50	K	W	1 or 2	AVX, KEM
	Capacitance	Rated	Capacitance	Termination		
Part Number	Value (pF)	Voltage (V)	Tolerance (%)	Finish (#)	Level	Manufacturer

CKS14 Ceramic Capacitors

	Capacitance	Rated	Capacitance	Termination		
Part Number	Value (pF)	Voltage (V)	Tolerance (%)	Finish (#)	Level	Manufacturer
M123A06BPC241%W	240	100	F, J, K	W	1 or 2	AVX, KEM
M123A06BPC271%W	270	100	F, J, K	W	1 or 2	AVX, KEM
M123A06BPC301%W	300	100	F, J, K	W	1 or 2	AVX, KEM
M123A06BPC331%W	330	100	F, J, K	W	1 or 2	AVX, KEM
M123A06BPC361%W	360	100	F, J, K	W	1 or 2	AVX, KEM
M123A06BPC391%W	390	100	F, J, K	W	1 or 2	AVX, KEM
M123A06BPC431%W	430	100	F, J, K	W	1 or 2	AVX, KEM
M123A06BPC471%W	470	100	F, J, K	W	1 or 2	AVX, KEM
M123A06BPC511%W	510	100	F, J, K	W	1 or 2	AVX, KEM
M123A06BPC561%W	560	100	F, J, K	W	1 or 2	AVX, KEM
M123A06BPC621%W	620	100	F, J, K	W	1 or 2	AVX, KEM
M123A06BPC681%W	680	100	F, J, K	W	1 or 2	AVX, KEM
M123A06BPC751%W	750	100	F, J, K	W	1 or 2	AVX, KEM
M123A06BPC821%W	820	100	F, J, K	W	1 or 2	AVX, KEM
M123A06BPC911%W	910	100	F, J, K	W	1 or 2	AVX, KEM
M123A06BPC102%W	1000	100	F, J, K	W	1 or 2	AVX, KEM
M123A06BPB112%W	1100	50	F, J, K	W	1 or 2	AVX, KEM
M123A06BPB122%W	1200	50	F, J, K	W	1 or 2	AVX, KEM
	Capacitance	Rated	Capacitance	Termination		
Part Number	Value (pF)	Voltage (V)	Tolerance (%)	Finish (#)	Level	Manufacturer
M123A06BPB132%W	1300	50	F, J, K	W	1 or 2	AVX, KEM
M123A06BPB152%W	1500	50	F, J, K	W	1 or 2	AVX, KEM
M123A06BPB162%W	1600	50	F, J, K	W	1 or 2	AVX, KEM
M123A06BPB182%W	1800	50	F, J, K	W	1 or 2	AVX, KEM
M123A06BPB202%W	2000	50	F, J, K	W	1 or 2	AVX, KEM
M123A06BPB222%W	2200	50	F, J, K	W	1 or 2	AVX, KEM
M123A06BPB242%W	2400	50	F, J, K	W	1 or 2	AVX, KEM
M123A06BPB272%W	2700	50	F, J, K	W	1 or 2	AVX, KEM

M123A06BPB302%W	3000	50	F, J, K	W	1 or 2	AVX, KEM
M123A06BPB332%W	3300	50	F, J, K	W	1 or 2	AVX, KEM
M123A06BPB362%W	3600	50	F, J, K	W	1 or 2	AVX, KEM
M123A06BPB392%W	3900	50	F, J, K	W	1 or 2	AVX, KEM
M123A06BPB432%W	4300	50	F, J, K	W	1 or 2	AVX, KEM
M123A06BPB472%W	4700	50	F, J, K	W	1 or 2	AVX, KEM
M123A06BPB512%W	5100	50	F, J, K	W	1 or 2	AVX, KEM
M123A06BPB562%W	5600	50	F, J, K	W	1 or 2	AVX, KEM
M123A06BPB622%W	6200	50	F, J, K	W	1 or 2	AVX, KEM
M123A06BPB682%W	6800	50	F, J, K	W	1 or 2	AVX, KEM
	Capacitance	Rated	Capacitance	Termination		
Part Number	Value (pF)	Voltage (V)	Tolerance (%)	Finish (#)	Level	Manufacturer
M123A06BXC562KW	5600	100	K	W	1 or 2	AVX, KEM
M123A06BXC682KW	6800	100	K	W	1 or 2	AVX, KEM
M123A06BXC822KW	8200	100	K	W	1 or 2	AVX, KEM
M123A06BXC103KW	10000	100	K	W	1 or 2	AVX, KEM
M123A06BXB123KW	12000	50	K	W	1 or 2	AVX, KEM
M123A06BXB153KW	15000	50	K	W	1 or 2	AVX, KEM
M123A06BXB183KW	18000	50	K	W	1 or 2	AVX, KEM
M123A06BXB223KW	22000	50	K	W	1 or 2	AVX, KEM
M123A06BXB273KW	27000	50	K	W	1 or 2	AVX, KEM
M123A06BXB333KW	33000	50	K	W	1 or 2	AVX, KEM
M123A06BXB393KW	39000	50	K	W	1 or 2	AVX, KEM
M123A06BXB473KW	47000	50	K	W	1 or 2	AVX, KEM
	Capacitance	Rated	Capacitance	Termination		
Part Number	Value (pF)	Voltage (V)	Tolerance (%)	Finish (#)	Level	Manufacturer

CKS15 Ceramic Capacitors

	Capacitance	Rated	Capacitance	Termination		
Part Number	Value (pF)	Voltage (V)	Tolerance (%)	Finish (#)	Level	Manufacturer
M123A07BPC112%W	1100	100	F, J, K	W	1 or 2	AVX, KEM
M123A07BPC122%W	1200	100	F, J, K	W	1 or 2	AVX, KEM
M123A07BPC132%W	1300	100	F, J, K	W	1 or 2	AVX, KEM
M123A07BPC152%W	1500	100	F, J, K	W	1 or 2	AVX, KEM
M123A07BPC162%W	1600	100	F, J, K	W	1 or 2	AVX, KEM
M123A07BPC182%W	1800	100	F, J, K	W	1 or 2	AVX, KEM
M123A07BPC202%W	2000	100	F, J, K	W	1 or 2	AVX, KEM
M123A07BPC222%W	2200	100	F, J, K	W	1 or 2	AVX, KEM
M123A07BPB242%W	2400	50	F, J, K	W	1 or 2	AVX, KEM
M123A07BPB272%W	2700	50	F, J, K	W	1 or 2	AVX, KEM
M123A07BPB302%W	3000	50	F, J, K	W	1 or 2	AVX, KEM
M123A07BPB332%W	3300	50	F, J, K	W	1 or 2	AVX, KEM
M123A07BPB362%W	3600	50	F, J, K	W	1 or 2	AVX, KEM
M123A07BPB392%W	3900	50	F, J, K	W	1 or 2	AVX, KEM

M123A07BPB432%W	4300	50	F, J, K	W	1 or 2	AVX, KEM
M123A07BPB472%W	4700	50	F, J, K	W	1 or 2	AVX, KEM
M123A07BPB512%W	5100	50	F, J, K	W	1 or 2	AVX, KEM
M123A07BPB562%W	5600	50	F, J, K	W	1 or 2	AVX, KEM
	Capacitance	Rated	Capacitance	Termination		
Part Number	Value (pF)	Voltage (V)	Tolerance (%)	Finish (#)	Level	Manufacturer
M123A07BPB622%W	6200	50	F, J, K	W	1 or 2	AVX, KEM
M123A07BPB682%W	6800	50	F, J, K	W	1 or 2	AVX, KEM
M123A07BPB752%W	7500	50	F, J, K	W	1 or 2	AVX, KEM
M123A07BPB822%W	8200	50	F, J, K	W	1 or 2	AVX, KEM
M123A07BPB912%W	9100	50	F, J, K	W	1 or 2	AVX, KEM
M123A07BPB103%W	10000	50	F, J, K	W	1 or 2	AVX, KEM
M123A07BPB113%W	11000	50	F, J, K	W	1 or 2	AVX, KEM
M123A07BPB123%W	12000	50	F, J, K	W	1 or 2	AVX, KEM
M123A07BPB133%W	13000	50	F, J, K	W	1 or 2	AVX, KEM
M123A07BPB153%W	15000	50	F, J, K	W	1 or 2	AVX, KEM
M123A07BPB163%W	16000	50	F, J, K	W	1 or 2	AVX, KEM
M123A07BPB183%W	18000	50	F, J, K	W	1 or 2	AVX, KEM
M123A07BPB203%W	20000	50	F, J, K	W	1 or 2	AVX, KEM
M123A07BPB223%W	22000	50	F, J, K	W	1 or 2	AVX, KEM
M123A07BXC123KW	12000	100	K	W	1 or 2	AVX, KEM
M123A07BXC153KW	15000	100	K	W	1 or 2	AVX, KEM
M123A07BXC183KW	18000	100	K	W	1 or 2	AVX, KEM
M123A07BXC223KW	22000	100	K	W	1 or 2	AVX, KEM
	Capacitance	Rated	Capacitance	Termination		
Part Number	Value (pF)	Voltage (V)	Tolerance (%)	Finish (#)	Level	Manufacturer
M123A07BXC273KW	27000	100	K	W	1 or 2	AVX, KEM
M123A07BXC333KW	33000	100	K	W	1 or 2	AVX, KEM
M123A07BXC393KW	39000	100	K	W	1 or 2	AVX, KEM
M123A07BXC473KW	47000	100	K	W	1 or 2	AVX, KEM
M123A07BXC563KW	56000	100	K	W	1 or 2	AVX, KEM
M123A07BXC683KW	68000	100	K	W	1 or 2	AVX, KEM
M123A07BXC823KW	82000	100	K	W	1 or 2	AVX, KEM
M123A07BXC104KW	100000	100	K	W	1 or 2	AVX, KEM
M123A07BXB124KW	120000	50	K	W	1 or 2	AVX, KEM
M123A07BXB154KW	150000	50	K	W	1 or 2	AVX, KEM
M123A07BXB184KW	180000	50	K	W	1 or 2	AVX, KEM
	Capacitance	Rated	Capacitance	Termination		
Part Number	Value (pF)	Voltage (V)	Tolerance (%)	Finish (#)	Level	Manufacturer

CKS16 Ceramic Capacitors

	Capacitance	Rated	Capacitance	Termination		
Part Number	Value (pF)	Voltage (V)	Tolerance (%)	Finish (#)	Level	Manufacturer
M123A08BPC242%W	2400	100	F, J, K	W	1 or 2	AVX, KEM

M123A08BPC272%W	2700	100	F, J, K	W	1 or 2	AVX, KEM
M123A08BPC302%W	3000	100	F, J, K	W	1 or 2	AVX, KEM
M123A08BPC332%W	3300	100	F, J, K	W	1 or 2	AVX, KEM
M123A08BPC362%W	3600	100	F, J, K	W	1 or 2	AVX, KEM
M123A08BPC392%W	3900	100	F, J, K	W	1 or 2	AVX, KEM
M123A08BPC432%W	4300	100	F, J, K	W	1 or 2	AVX, KEM
M123A08BPC472%W	4700	100	F, J, K	W	1 or 2	AVX, KEM
M123A08BPC512%W	5100	100	F, J, K	W	1 or 2	AVX, KEM
M123A08BPC562%W	5600	100	F, J, K	W	1 or 2	AVX, KEM
M123A08BPC622%W	6200	100	F, J, K	W	1 or 2	AVX, KEM
M123A08BPC682%W	6800	100	F, J, K	W	1 or 2	AVX, KEM
M123A08BPC822%W	8200	100	F, J, K	W	1 or 2	AVX, KEM
M123A08BPC912%W	9100	100	F, J, K	W	1 or 2	AVX, KEM
M123A08BPC103%W	10000	100	F, J, K	W	1 or 2	AVX, KEM
M123A08BPB113%W	11000	50	F, J, K	W	1 or 2	AVX, KEM
M123A08BPB123%W	12000	50	F, J, K	W	1 or 2	AVX, KEM
M123A08BPB133%W	13000	50	F, J, K	W	1 or 2	AVX, KEM
	Capacitance	Rated	Capacitance	Termination		
Part Number	Value (pF)	Voltage (V)	Tolerance (%)	Finish (#)	Level	Manufacturer
M123A08BPB153%W	15000	50	F, J, K	W	1 or 2	AVX, KEM
M123A08BPB163%W	16000	50	F, J, K	W	1 or 2	AVX, KEM
M123A08BPB183%W	18000	50	F, J, K	W	1 or 2	AVX, KEM
M123A08BPB203%W	20000	50	F, J, K	W	1 or 2	AVX, KEM
M123A08BPB223%W	22000	50	F, J, K	W	1 or 2	AVX, KEM
M123A08BXC124KW	120000	100	K	W	1 or 2	AVX, KEM
M123A08BXC154KW	150000	100	K	W	1 or 2	AVX, KEM
M123A08BXC184KW	180000	100	K	W	1 or 2	AVX, KEM
M123A08BXC224KW	220000	100	K	W	1 or 2	AVX, KEM
M123A08BXC274KW	270000	100	K	W	1 or 2	AVX, KEM
M123A08BXC334KW	330000	100	K	W	1 or 2	AVX, KEM
M123A08BXC394KW	390000	100	K	W	1 or 2	AVX, KEM
M123A08BXC474KW	470000	100	K	W	1 or 2	AVX, KEM
M123A08BXB564KW	560000	50	K	W	1 or 2	AVX, KEM
M123A08BXB684KW	680000	50	K	W	1 or 2	AVX, KEM
M123A08BXB824KW	820000	50	K	W	1 or 2	AVX, KEM
M123A08BXB105KW	1000000	50	K	W	1 or 2	AVX, KEM
	Capacitance	Rated	Capacitance	Termination		
Part Number	Value (pF)	Voltage (V)	Tolerance (%)	Finish (#)	Level	Manufacturer

CKS22 Ceramic Capacitors

	Capacitance	Rated	Capacitance	Termination		
Part Number	Value (pF)	Voltage (V)	Tolerance (%)	Finish (#)	Level	Manufacturer
M123A16BPD1R0DC	1.0	200	D	C	1 or 2	AVX, KEM
M123A16BPD1R2DC	1.2	200	D	C	1 or 2	AVX, KEM

M123A16BPD1R5DC	1.5	200	D	C	1 or 2	AVX, KEM
M123A16BPD1R8DC	1.8	200	D	C	1 or 2	AVX, KEM
M123A16BPD2R2DC	2.2	200	D	C	1 or 2	AVX, KEM
M123A16BPD2R7DC	2.7	200	D	C	1 or 2	AVX, KEM
M123A16BPD3R3DC	3.3	200	D	C	1 or 2	AVX, KEM
M123A16BPD3R9DC	3.9	200	D	C	1 or 2	AVX, KEM
M123A16BPD4R7DC	4.7	200	D	C	1 or 2	AVX, KEM
M123A16BPD5R6DC	5.6	200	D	C	1 or 2	AVX, KEM
M123A16BPD6R8DC	6.8	200	D	C	1 or 2	AVX, KEM
M123A16BPD8R2DC	8.2	200	D	C	1 or 2	AVX, KEM
M123A16BPD100%C	10	200	D, J, K	C	1 or 2	AVX, KEM
M123A16BPD120%C	12	200	D, J, K	C	1 or 2	AVX, KEM
M123A16BPD150%C	15	200	D, J, K	C	1 or 2	AVX, KEM
M123A16BPD180%C	18	200	D, J, K	C	1 or 2	AVX, KEM
M123A16BPD220%C	22	200	D, J, K	C	1 or 2	AVX, KEM
M123A16BPD270%C	27	200	D, J, K	C	1 or 2	AVX, KEM
	Capacitance	Rated	Capacitance	Termination		
Part Number	Value (pF)	Voltage (V)	Tolerance (%)	Finish (#)	Level	Manufacturer
M123A16BPD330%C	33	200	D, J, K	C	1 or 2	AVX, KEM
M123A16BPD390%C	39	200	D, J, K	C	1 or 2	AVX, KEM
M123A16BPD470%C	47	200	D, J, K	C	1 or 2	AVX, KEM
M123A16BPD560%C	56	200	D, J, K	C	1 or 2	AVX, KEM
M123A16BPD680%C	68	200	F, J, K	C	1 or 2	AVX, KEM
M123A16BPD820%C	82	200	F, J, K	C	1 or 2	AVX, KEM
M123A16BPD101%C	100	200	F, J, K	C	1 or 2	AVX, KEM
M123A16BPD121%C	120	200	F, J, K	C	1 or 2	AVX, KEM
M123A16BPD151%C	150	200	F, J, K	C	1 or 2	AVX, KEM
M123A16BPD181%C	180	200	F, J, K	C	1 or 2	AVX, KEM
M123A16BPD221%C	220	200	F, J, K	C	1 or 2	AVX, KEM
M123A16BPD271%C	270	200	F, J, K	C	1 or 2	AVX, KEM
M123A16BPD331%C	330	200	F, J, K	C	1 or 2	AVX, KEM
M123A16BPD391%C	390	200	F, J, K	C	1 or 2	AVX, KEM
M123A16BPD471%C	470	200	F, J, K	C	1 or 2	AVX, KEM
M123A16BPD561%C	560	200	F, J, K	C	1 or 2	AVX, KEM
M123A16BPD681%C	680	200	F, J, K	C	1 or 2	AVX, KEM
M123A16BPD821%C	820	200	F, J, K	C	1 or 2	AVX, KEM
	Capacitance	Rated	Capacitance	Termination		
Part Number	Value (pF)	Voltage (V)	Tolerance (%)	Finish (#)	Level	Manufacturer
M123A16BPD102%C	1000	200	F, J, K	C	1 or 2	AVX, KEM
M123A16BPD122%C	1200	200	F, J, K	C	1 or 2	AVX, KEM
M123A16BPD152%C	1500	200	F, J, K	C	1 or 2	AVX, KEM
M123A16BPD182%C	1800	200	F, J, K	C	1 or 2	AVX, KEM
M123A16BPD222%C	2200	200	F, J, K	C	1 or 2	AVX, KEM
M123A16BPD272%C	2700	200	F, J, K	C	1 or 2	AVX, KEM
M123A16BPD332%C	3300	200	F, J, K	C	1 or 2	AVX, KEM
M123A16BPD392%C	3900	200	F, J, K	C	1 or 2	AVX, KEM
M123A16BPD472%C	4700	200	F, J, K	C	1 or 2	AVX, KEM

M123A16BXD271KC	270	200	K	C	1 or 2	AVX, KEM
M123A16BXD331KC	330	200	K	C	1 or 2	AVX, KEM
M123A16BXD391KC	390	200	K	C	1 or 2	AVX, KEM
M123A16BXD471KC	470	200	K	C	1 or 2	AVX, KEM
M123A16BXD561KC	560	200	K	C	1 or 2	AVX, KEM
M123A16BXD681KC	680	200	K	C	1 or 2	AVX, KEM
M123A16BXD821KC	820	200	K	C	1 or 2	AVX, KEM
M123A16BXC102KC	1000	100	K	C	1 or 2	AVX, KEM
M123A16BXC122KC	1200	100	K	C	1 or 2	AVX, KEM
	Capacitance	Rated	Capacitance	Termination		
Part Number	Value (pF)	Voltage (V)	Tolerance (%)	Finish (#)	Level	Manufacturer
M123A16BXC152KC	1500	100	K	C	1 or 2	AVX, KEM
M123A16BXC182KC	1800	100	K	C	1 or 2	AVX, KEM
M123A16BXC222KC	2200	100	K	C	1 or 2	AVX, KEM
M123A16BXC272KC	2700	100	K	C	1 or 2	AVX, KEM
M123A16BXC332KC	3300	100	K	C	1 or 2	AVX, KEM
M123A16BXC392KC	3900	100	K	C	1 or 2	AVX, KEM
M123A16BXC472KC	4700	100	K	C	1 or 2	AVX, KEM
M123A16BXC562KC	5600	100	K	C	1 or 2	AVX, KEM
M123A16BXC682KC	6800	100	K	C	1 or 2	AVX, KEM
M123A16BXC822KC	8200	100	K	C	1 or 2	AVX, KEM
M123A16BXC103KC	10000	100	K	C	1 or 2	AVX, KEM
M123A16BXB123KC	12000	50	K	C	1 or 2	AVX, KEM
M123A16BXB153KC	15000	50	K	C	1 or 2	AVX, KEM
M123A16BXB183KC	18000	50	K	C	1 or 2	AVX, KEM
M123A16BXB223KC	22000	50	K	C	1 or 2	AVX, KEM
M123A16BXB273KC	27000	50	K	C	1 or 2	AVX, KEM
M123A16BXB333KC	33000	50	K	C	1 or 2	AVX, KEM
M123A16BXB393KC	39000	50	K	C	1 or 2	AVX, KEM
	Capacitance	Rated	Capacitance	Termination		
Part Number	Value (pF)	Voltage (V)	Tolerance (%)	Finish (#)	Level	Manufacturer
M123A16BXB473KC	47000	50	K	C	1 or 2	AVX, KEM
M123A16BXB563KC	56000	50	K	C	1 or 2	AVX, KEM
M123A16BXB683KC	68000	50	K	C	1 or 2	AVX, KEM
M123A16BXB823KC	82000	50	K	C	1 or 2	AVX, KEM
M123A16BXB104KC	100000	50	K	C	1 or 2	AVX, KEM

CKS23 Ceramic Capacitors

	Capacitance	Rated	Capacitance	Termination		
Part Number	Value (pF)	Voltage (V)	Tolerance (%)	Finish (#)	Level	Manufacturer
M123A17BPD561%C	560	200	F, J, K	C	1 or 2	AVX, KEM
M123A17BPD681%C	680	200	F, J, K	C	1 or 2	AVX, KEM
M123A17BPD821%C	820	200	F, J, K	C	1 or 2	AVX, KEM
M123A17BPD102%C	1000	200	F, J, K	C	1 or 2	AVX, KEM

M123A17BPD122%C	1200	200	F, J, K	C	1 or 2	AVX, KEM
M123A17BPC272%C	2700	100	F, J, K	C	1 or 2	AVX, KEM
M123A17BPC332%C	3300	100	F, J, K	C	1 or 2	AVX, KEM
M123A17BPB472%C	4700	50	F, J, K	C	1 or 2	AVX, KEM
M123A17BPB562%C	5600	50	F, J, K	C	1 or 2	AVX, KEM
M123A17BPB682%C	6800	50	F, J, K	C	1 or 2	AVX, KEM
M123A17BPB822%C	8200	50	F, J, K	C	1 or 2	AVX, KEM
M123A17BPB103%C	10000	50	F, J, K	C	1 or 2	AVX, KEM
M123A17BXD102KC	1000	200	K	C	1 or 2	AVX, KEM
M123A17BXD122KC	1200	200	K	C	1 or 2	AVX, KEM
M123A17BXD152KC	1500	200	K	C	1 or 2	AVX, KEM
M123A17BXD182KC	1800	200	K	C	1 or 2	AVX, KEM
M123A17BXD222KC	2200	200	K	C	1 or 2	AVX, KEM
M123A17BXD272KC	2700	200	K	C	1 or 2	AVX, KEM
	Capacitance	Rated	Capacitance	Termination		
Part Number	Value (pF)	Voltage (V)	Tolerance (%)	Finish (#)	Level	Manufacturer
M123A17BXD332KC	3300	200	K	C	1 or 2	AVX, KEM
M123A17BXD392KC	3900	200	K	C	1 or 2	AVX, KEM
M123A17BXD472KC	4700	200	K	C	1 or 2	AVX, KEM
M123A17BXD562KC	5600	200	K	C	1 or 2	AVX, KEM
M123A17BXD682KC	6800	200	K	C	1 or 2	AVX, KEM
M123A17BXD822KC	8200	200	K	C	1 or 2	AVX, KEM
M123A17BXD103KC	10000	200	K	C	1 or 2	AVX, KEM
M123A17BXC123KC	12000	100	K	C	1 or 2	AVX, KEM
M123A17BXC153KC	15000	100	K	C	1 or 2	AVX, KEM
M123A17BXC183KC	18000	100	K	C	1 or 2	AVX, KEM
M123A17BXC223KC	22000	100	K	C	1 or 2	AVX, KEM
M123A17BXC273KC	27000	100	K	C	1 or 2	AVX, KEM
M123A17BXC333KC	33000	100	K	C	1 or 2	AVX, KEM
M123A17BXC393KC	39000	100	K	C	1 or 2	AVX, KEM
M123A17BXC473KC	47000	100	K	C	1 or 2	AVX, KEM
M123A17BXC563KC	56000	100	K	C	1 or 2	AVX, KEM
M123A17BXC683KC	68000	100	K	C	1 or 2	AVX, KEM
M123A17BXC823KC	82000	100	K	C	1 or 2	AVX, KEM
	Capacitance	Rated	Capacitance	Termination		
Part Number	Value (pF)	Voltage (V)	Tolerance (%)	Finish (#)	Level	Manufacturer
M123A17BXC104KC	100000	100	K	C	1 or 2	AVX, KEM
M123A17BXC124KC	120000	100	K	C	1 or 2	AVX, KEM
M123A17BXC154KC	150000	100	K	C	1 or 2	AVX, KEM
M123A17BXC184KC	180000	100	K	C	1 or 2	AVX, KEM
M123A17BXC224KC	220000	100	K	C	1 or 2	AVX, KEM
	Capacitance	Rated	Capacitance	Termination		
Part Number	Value (pF)	Voltage (V)	Tolerance (%)	Finish (#)	Level	Manufacturer

	Capacitance	Rated	Capacitance	Termination		
Part Number	Value (pF)	Voltage (V)	Tolerance (%)	Finish (#)	Level	Manufacturer
M123A18BRC124KC	120000	100	K	C	1 or 2	AVX, KEM
M123A18BRC154%C	150000	100	K, M	C	1 or 2	AVX, KEM
M123A18BRB184KC	180000	50	K	C	1 or 2	AVX, KEM
M123A18BRB224%C	220000	50	K, M	C	1 or 2	AVX, KEM
M123A18BRB274KC	270000	50	K	C	1 or 2	AVX, KEM
M123A18BRB334%C	330000	50	K, M	C	1 or 2	AVX, KEM
M123A18BRB394KC	390000	50	K	C	1 or 2	AVX, KEM
M123A18BRB474%C	470000	50	K, M	C	1 or 2	AVX, KEM

CKS51 Ceramic Capacitors

	Capacitance	Rated	Capacitance	Termination		
Part Number	Value (pF)	Voltage (V)	Tolerance (%)	Finish (#)	Level	Manufacturer
M123A10BPB1R0%#	1.0	50	C, D	M, G, S	1 or 2	AVX, KEM
M123A10BPB1R1%#	1.1	50	C, D	M, G, S	1 or 2	AVX, KEM
M123A10BPB1R2%#	1.2	50	C, D	M, G, S	1 or 2	AVX, KEM
M123A10BPB1R3%#	1.3	50	C, D	M, G, S	1 or 2	AVX, KEM
M123A10BPB1R5%#	1.5	50	C, D	M, G, S	1 or 2	AVX, KEM
M123A10BPB1R6%#	1.6	50	C, D	M, G, S	1 or 2	AVX, KEM
M123A10BPB1R8%#	1.8	50	C, D	M, G, S	1 or 2	AVX, KEM
M123A10BPB2R0%#	2.0	50	C, D	M, G, S	1 or 2	AVX, KEM
M123A10BPB2R2%#	2.2	50	C, D	M, G, S	1 or 2	AVX, KEM
M123A10BPB2R4%#	2.4	50	C, D	M, G, S	1 or 2	AVX, KEM
M123A10BPB2R7%#	2.7	50	C, D	M, G, S	1 or 2	AVX, KEM
M123A10BPB3R0%#	3.0	50	C, D	M, G, S	1 or 2	AVX, KEM
M123A10BPB3R3%#	3.3	50	C, D	M, G, S	1 or 2	AVX, KEM
M123A10BPB3R6%#	3.6	50	C, D	M, G, S	1 or 2	AVX, KEM
M123A10BPB3R9%#	3.9	50	C, D	M, G, S	1 or 2	AVX, KEM
M123A10BPB4R3%#	4.3	50	C, D	M, G, S	1 or 2	AVX, KEM
M123A10BPB4R7%#	4.7	50	C, D	M, G, S	1 or 2	AVX, KEM
M123A10BPB5R1%#	5.1	50	C, D	M, G, S	1 or 2	AVX, KEM
	Capacitance	Rated	Capacitance	Termination		
Part Number	Value (pF)	Voltage (V)	Tolerance (%)	Finish (#)	Level	Manufacturer
M123A10BPB5R6%#	5.6	50	C, D	M, G, S	1 or 2	AVX, KEM
M123A10BPB6R2%#	6.2	50	C, D	M, G, S	1 or 2	AVX, KEM
M123A10BPB6R8%#	6.8	50	C, D	M, G, S	1 or 2	AVX, KEM
M123A10BPB7R5%#	7.5	50	C, D	M, G, S	1 or 2	AVX, KEM
M123A10BPB8R2%#	8.2	50	C, D	M, G, S	1 or 2	AVX, KEM
M123A10BPB9R1%#	9.1	50	C, D	M, G, S	1 or 2	AVX, KEM
M123A10BPB100%#	10	50	C, J, K	M, G, S	1 or 2	AVX, KEM
M123A10BPB110%#	11	50	C, J, K	M, G, S	1 or 2	AVX, KEM
M123A10BPB120%#	12	50	C, J, K	M, G, S	1 or 2	AVX, KEM

M123A10BPB130%#	13	50	C, J, K	M, G, S	1 or 2	AVX, KEM
M123A10BPB150%#	15	50	C, J, K	M, G, S	1 or 2	AVX, KEM
M123A10BPB160%#	16	50	C, J, K	M, G, S	1 or 2	AVX, KEM
M123A10BPB180%#	18	50	C, J, K	M, G, S	1 or 2	AVX, KEM
M123A10BPB200%#	20	50	C, J, K	M, G, S	1 or 2	AVX, KEM
M123A10BPB220%#	22	50	C, J, K	M, G, S	1 or 2	AVX, KEM
M123A10BPB240%#	24	50	C, J, K	M, G, S	1 or 2	AVX, KEM
M123A10BPB270%#	27	50	F, J, K	M, G, S	1 or 2	AVX, KEM
M123A10BPB300%#	30	50	F, J, K	M, G, S	1 or 2	AVX, KEM
	Capacitance	Rated	Capacitance	Termination		
Part Number	Value (pF)	Voltage (V)	Tolerance (%)	Finish (#)	Level	Manufacturer
M123A10BPB330%#	33	50	F, J, K	M, G, S	1 or 2	AVX, KEM
M123A10BPB360%#	36	50	F, J, K	M, G, S	1 or 2	AVX, KEM
M123A10BPB390%#	39	50	F, J, K	M, G, S	1 or 2	AVX, KEM
M123A10BPB430%#	43	50	F, J, K	M, G, S	1 or 2	AVX, KEM
M123A10BPB470%#	47	50	F, J, K	M, G, S	1 or 2	AVX, KEM
M123A10BPB510%#	51	50	F, J, K	M, G, S	1 or 2	AVX, KEM
M123A10BPB560%#	56	50	F, J, K	M, G, S	1 or 2	AVX, KEM
M123A10BPB620%#	62	50	F, J, K	M, G, S	1 or 2	AVX, KEM
M123A10BPB680%#	68	50	F, J, K	M, G, S	1 or 2	AVX, KEM
M123A10BPB750%#	75	50	F, J, K	M, G, S	1 or 2	AVX, KEM
M123A10BPB820%#	82	50	F, J, K	M, G, S	1 or 2	AVX, KEM
M123A10BPB910%#	91	50	F, J, K	M, G, S	1 or 2	AVX, KEM
M123A10BPB101%#	100	50	F, J, K	M, G, S	1 or 2	AVX, KEM
M123A10BPB111%#	110	50	F, J, K	M, G, S	1 or 2	AVX, KEM
M123A10BPB121%#	120	50	F, J, K	M, G, S	1 or 2	AVX, KEM
M123A10BPB131%#	130	50	F, J, K	M, G, S	1 or 2	AVX, KEM
M123A10BPB151%#	150	50	F, J, K	M, G, S	1 or 2	AVX, KEM
M123A10BPB161%#	160	50	F, J, K	M, G, S	1 or 2	AVX, KEM
	Capacitance	Rated	Capacitance	Termination		
Part Number	Value (pF)	Voltage (V)	Tolerance (%)	Finish (#)	Level	Manufacturer
M123A10BPB181%#	180	50	F, J, K	M, G, S	1 or 2	AVX, KEM
M123A10BPB201%#	200	50	F, J, K	M, G, S	1 or 2	AVX, KEM
M123A10BPB221%#	220	50	F, J, K	M, G, S	1 or 2	AVX, KEM
M123A10BPB241%#	240	50	F, J, K	M, G, S	1 or 2	AVX, KEM
M123A10BPB271%#	270	50	F, J, K	M, G, S	1 or 2	AVX, KEM
M123A10BXB331K#	330	50	K	M, G, S	1 or 2	AVX, KEM, PRE
M123A10BXB391K#	390	50	K	M, G, S	1 or 2	AVX, KEM, PRE
M123A10BXB471K#	470	50	K	M, G, S	1 or 2	AVX, KEM, PRE
M123A10BXB561K#	560	50	K	M, G, S	1 or 2	AVX, KEM, PRE
M123A10BXB681K#	680	50	K	M, G, S	1 or 2	AVX, KEM, PRE
M123A10BXB821K#	820	50	K	M, G, S	1 or 2	AVX, KEM, PRE
M123A10BXB102K#	1000	50	K	M, G, S	1 or 2	AVX, KEM, PRE
M123A10BXB122K#	1200	50	K	M, G, S	1 or 2	AVX, KEM, PRE
M123A10BXB152K#	1500	50	K	M, G, S	1 or 2	AVX, KEM, PRE
M123A10BXB182K#	1800	50	K	M, G, S	1 or 2	AVX, KEM, PRE
M123A10BXB222K#	2200	50	K	M, G, S	1 or 2	AVX, KEM, PRE

M123A10BXB272K#	2700	50	K	M, G, S	1 or 2	AVX, KEM
M123A10BXB332K#	3300	50	K	M, G, S	1 or 2	AVX, KEM
M123A10BXB392K#	3900	50	K	M, G, S	1 or 2	AVX, KEM
M123A10BXB472K#	4700	50	K	M, G, S	1 or 2	AVX, KEM
	Capacitance	Rated	Capacitance	Termination		
Part Number	Value (pF)	Voltage (V)	Tolerance (%)	Finish (#)	Level	Manufacturer

CKS52 Ceramic Capacitors

	Capacitance	Rated	Capacitance	Termination		
Part Number	Value (pF)	Voltage (V)	Tolerance (%)	Finish (#)	Level	Manufacturer
M123A11BPB301%#	300	50	F, J, K	M, G, S	1 or 2	AVX, KEM
M123A11BPB331%#	330	50	F, J, K	M, G, S	1 or 2	AVX, KEM
M123A11BPB361%#	360	50	F, J, K	M, G, S	1 or 2	AVX, KEM
M123A11BPB391%#	390	50	F, J, K	M, G, S	1 or 2	AVX, KEM
M123A11BPB431%#	430	50	F, J, K	M, G, S	1 or 2	AVX, KEM
M123A11BPB471%#	470	50	F, J, K	M, G, S	1 or 2	AVX, KEM
M123A11BPB511%#	510	50	F, J, K	M, G, S	1 or 2	AVX, KEM
M123A11BPB561%#	560	50	F, J, K	M, G, S	1 or 2	AVX, KEM
M123A11BPB621%#	620	50	F, J, K	M, G, S	1 or 2	AVX, KEM
M123A11BPB681%#	680	50	F, J, K	M, G, S	1 or 2	AVX, KEM
M123A11BPB751%#	750	50	F, J, K	M, G, S	1 or 2	AVX, KEM
M123A11BPB821%#	820	50	F, J, K	M, G, S	1 or 2	AVX, KEM
M123A11BPB911%#	910	50	F, J, K	M, G, S	1 or 2	AVX, KEM
M123A11BPB102%#	1000	50	F, J, K	M, G, S	1 or 2	AVX, KEM
M123A11BXB562K#	5600	50	F, J, K	M, G, S	1 or 2	AVX, KEM
M123A11BXB682K#	6800	50	K	M, G, S	1 or 2	AVX, KEM
M123A11BXB822K#	8200	50	K	M, G, S	1 or 2	AVX, KEM
M123A11BXB103K#	10000	50	K	M, G, S	1 or 2	AVX, KEM
	Capacitance	Rated	Capacitance	Termination		
Part Number	Value (pF)	Voltage (V)	Tolerance (%)	Finish (#)	Level	Manufacturer
M123A11BXB123K#	12000	50	K	M, G, S	1 or 2	AVX, KEM
M123A11BXB153K#	15000	50	K	M, G, S	1 or 2	AVX, KEM
M123A11BXB183K#	18000	50	K	M, G, S	1 or 2	AVX, KEM
M123A11BXB223K#	22000	50	K	M, G, S	1 or 2	AVX, KEM
M123A11BXB273K#	27000	50	K	M, G, S	1 or 2	AVX, KEM
M123A11BXB333K#	33000	50	K	M, G, S	1 or 2	AVX, KEM
M123A11BXB473K#	47000	50	K	M, G, S	1 or 2	AVX, KEM
	Capacitance	Rated	Capacitance	Termination		
Part Number	Value (pF)	Voltage (V)	Tolerance (%)	Finish (#)	Level	Manufacturer

CKS53 Ceramic Capacitors

	Capacitance	Rated	Capacitance	Termination		

Part Number	Value (pF)	Voltage (V)	Tolerance (%)	Finish (#)	Level	Manufacturer
M123A12BPB301%#	300	50	F, J, K	M, G, S	1 or 2	AVX, KEM
M123A12BPB331%#	330	50	F, J, K	M, G, S	1 or 2	AVX, KEM
M123A12BPB361%#	360	50	F, J, K	M, G, S	1 or 2	AVX, KEM
M123A12BPB391%#	390	50	F, J, K	M, G, S	1 or 2	AVX, KEM
M123A12BPB431%#	430	50	F, J, K	M, G, S	1 or 2	AVX, KEM
M123A12BPB471%#	470	50	F, J, K	M, G, S	1 or 2	AVX, KEM
M123A12BPB511%#	510	50	F, J, K	M, G, S	1 or 2	AVX, KEM
M123A12BPB561%#	560	50	F, J, K	M, G, S	1 or 2	AVX, KEM
M123A12BPB621%#	620	50	F, J, K	M, G, S	1 or 2	AVX, KEM
M123A12BPB681%#	680	50	F, J, K	M, G, S	1 or 2	AVX, KEM
M123A12BPB751%#	750	50	F, J, K	M, G, S	1 or 2	AVX, KEM
M123A12BPB821%#	820	50	F, J, K	M, G, S	1 or 2	AVX, KEM
M123A12BPB911%#	910	50	F, J, K	M, G, S	1 or 2	AVX, KEM
M123A12BPB102%#	1000	50	F, J, K	M, G, S	1 or 2	AVX, KEM
M123A12BXB562K#	5600	50	K	M, G, S	1 or 2	AVX, KEM
M123A12BXB682K#	6800	50	K	M, G, S	1 or 2	AVX, KEM
M123A12BXB822K#	8200	50	K	M, G, S	1 or 2	AVX, KEM
M123A12BXB103K#	10000	50	K	M, G, S	1 or 2	AVX, KEM
	Capacitance	Rated	Capacitance	Termination		
Part Number	Value (pF)	Voltage (V)	Tolerance (%)	Finish (#)	Level	Manufacturer
M123A12BXB123K#	12000	50	K	M, G, S	1 or 2	AVX, KEM
M123A12BXB153K#	15000	50	K	M, G, S	1 or 2	AVX, KEM
M123A12BXB183K#	18000	50	K	M, G, S	1 or 2	AVX, KEM
M123A12BXB223K#	22000	50	K	M, G, S	1 or 2	AVX, KEM
M123A12BXB273K#	27000	50	K	M, G, S	1 or 2	AVX, KEM
M123A12BXB333K#	33000	50	K	M, G, S	1 or 2	AVX, KEM
M123A12BXB473K#	47000	50	K	M, G, S	1 or 2	AVX, KEM
M123A12BXB563K#	56000	50	K	M, G, S	1 or 2	AVX, KEM
M123A12BXB683K#	68000	50	K	M, G, S	1 or 2	AVX, KEM
M123A12BXB823K#	82000	50	K	M, G, S	1 or 2	AVX, KEM
M123A12BXB104K#	100000	50	K	M, G, S	1 or 2	AVX, KEM
	Capacitance	Rated	Capacitance	Termination		
Part Number	Value (pF)	Voltage (V)	Tolerance (%)	Finish (#)	Level	Manufacturer

CKS54 Ceramic Capacitors

	Capacitance	Rated	Capacitance	Termination		
Part Number	Value (pF)	Voltage (V)	Tolerance (%)	Finish (#)	Level	Manufacturer
M123A13BPB112%#	1100	50	F, J, K	S	1 or 2	AVX, KEM
M123A13BPB122%#	1200	50	F, J, K	S	1 or 2	AVX, KEM
M123A13BPB132%#	1300	50	F, J, K	S	1 or 2	AVX, KEM
M123A13BPB152%#	1500	50	F, J, K	S	1 or 2	AVX, KEM
M123A13BPB162%#	1600	50	F, J, K	S	1 or 2	AVX, KEM
M123A13BPB182%#	1800	50	F, J, K	S	1 or 2	AVX, KEM

M123A13BPB202%#	2000	50	F, J, K	S	1 or 2	AVX, KEM
M123A13BPB222%#	2200	50	F, J, K	S	1 or 2	AVX, KEM
M123A13BPB242%#	2400	50	F, J, K	S	1 or 2	AVX, KEM
M123A13BPB272%#	2700	50	F, J, K	S	1 or 2	AVX, KEM
M123A13BPB302%#	3000	50	F, J, K	S	1 or 2	AVX, KEM
M123A13BPB332%#	3300	50	F, J, K	S	1 or 2	AVX, KEM
M123A13BPB362%#	3600	50	F, J, K	S	1 or 2	AVX, KEM
M123A13BPB392%#	3900	50	F, J, K	S	1 or 2	AVX, KEM
M123A13BPB432%#	4300	50	F, J, K	S	1 or 2	AVX, KEM
M123A13BPB472%#	4700	50	F, J, K	S	1 or 2	AVX, KEM
M123A13BPB512%#	5100	50	F, J, K	S	1 or 2	AVX, KEM
M123A13BPB562%#	5600	50	F, J, K	S	1 or 2	AVX, KEM
	Capacitance	Rated	Capacitance	Termination		
Part Number	Value (pF)	Voltage (V)	Tolerance (%)	Finish (#)	Level	Manufacturer
M123A13BPB622%#	6200	50	F, J, K	S	1 or 2	AVX, KEM
M123A13BPB682%#	6800	50	F, J, K	S	1 or 2	AVX, KEM
M123A13BPB752%#	7500	50	F, J, K	S	1 or 2	AVX, KEM
M123A13BPB822%#	8200	50	F, J, K	S	1 or 2	AVX, KEM
M123A13BPB912%#	9100	50	F, J, K	S	1 or 2	AVX, KEM
M123A13BPB103%#	10000	50	F, J, K	S	1 or 2	AVX, KEM
M123A13BXB124K#	120000	50	K	S	1 or 2	AVX, KEM
M123A13BXB154K#	150000	50	K	S	1 or 2	AVX, KEM
M123A13BXB184K#	180000	50	K	S	1 or 2	AVX, KEM
M123A13BXB224K#	220000	50	K	S	1 or 2	AVX, KEM
M123A13BXB274K#	270000	50	K	S	1 or 2	AVX, KEM
M123A13BXB334K#	330000	50	K	S	1 or 2	AVX, KEM
M123A13BXB394K#	390000	50	K	S	1 or 2	AVX, KEM
M123A13BXB474K#	470000	50	K	S	1 or 2	AVX, KEM
	Capacitance	Rated	Capacitance	Termination		
Part Number	Value (pF)	Voltage (V)	Tolerance (%)	Finish (#)	Level	Manufacturer

Go to -
NEPP
|
NPSL
|
Capacitors
MIL-PRF-20, CAPACITORS
Fixed, Ceramic Dielectric, Temperature Compensating, Established Reliability
CCR Styles
Part Number/Ordering Explanation
Important! Application Notes
Revision History for MIL-PRF-20 Listing in the NPSL
Last Revision: 05/21/98

Click on the link below to see the associated parts selection listing:

Style	Detail Specification	Description (Click the Link Below for Dimensions)	Available Capacitance Range (Voltage)
CCR05	MIL-PRF-20/35	Rectangular, Radial Lead (0.190" x 0.190")	1 pF to 330 pF(200 V); 360 pF to 1,800 pF (100 V); 2,000 pF to 3,300 pF (50 V)
CCR06	MIL-PRF-20/36	Rectangular, Radial Lead (0.290" x 0.290")	360 pF to 1,800 pF (200 V); 2,000 pF to 4,700 pF (100 V); 5,100 pF to 10,000 pF (50 V)
CCR07	MIL-PRF-20/37	Rectangular, Radial Lead (0.480" x 0.480")	2,200 pF to 3,300 pF (200 V); 5,600 pF to 12,000 pF (100 V); 15,000 pF to 22,000 pF (50 V)
CCR08	MIL-PRF-20/38	Rectangular, Radial Lead (0.480" x 0.480")	3,900 pF to 4,700 pF (200 V); 15,000 pF to 18,000 pF (100 V); 56,000 pF to 68,000 pF (50 V)
CCR75	MIL-PRF-20/27	Tubular, Axial Lead (0.160" x 0.090")	1 pF to 68 pF (200 V); 82 pF to 220 pF (100 V); 270 pF to 680 pF (50 V)
CCR76	MIL-PRF-20/28	Tubular, Axial Lead (0.250" x 0.090")	82 pF to 120 pF (200 V); 270 pF to 390 pF (100 V); 750 pF to 1,000 pF (50 V)
CCR77	MIL-PRF-20/29	Tubular, Axial Lead (0.390" x 0.140")	150 pF to 680 pF (200 V); 750 pF to 2,200 pF (100 V); 2,400 pF to 5,600 pF (50 V)
CCR78	MIL-PRF-20/30	Tubular, Axial Lead (0.500" x 0.250")	820 pF to 3,300 pF (200 V); 3,900 pF to 12,000 pF (100 V); 15,000 pF to 27,000 pF (50 V)
CCR79	MIL-PRF-20/31	Tubular, Axial Lead (0.690" x 0.350")	3,900 pF to 10,000 pF (200 V); 15,000 pF to 39,000 pF (100 V); 47,000 pF to 82,000pF (50 V)

APPLICATION NOTES FOR MIL-PRF-20

1) MIL-PRF-123 capacitors are space grade and are recommended for all Level 1 applications.

2) As an alternative to MIL-PRF-123, for Level 1 applications at >= 10 Vdc, MIL-PRF-20, MIL-PRF-39014, or MIL-PRF-55681 capacitors can be used in accordance with the type, value and failure rate guidelines shown in the tables.

3) As an alternative to MIL-PRF-123, for Level 1 low voltage applications (< 10 Vdc), MIL-PRF-20, MIL-PRF-39014, or MIL-PRF-55681 capacitors can be used, if capacitor rated voltage is at least 100 Vdc and flight lots are subjected to lot sample testing per Group B Subgroup 2 of MIL-PRF-123 (Humidity, Steady-State, Low Voltage). These recommendations stem from concerns about the low voltage failure mechanism which has been observed to occur in multilayer ceramic capacitors. In low voltage applications, multilayer ceramic capacitors with thin dielectrics and/or large voids, delaminations, inclusions, microcracks and other defects, may develop low and unstable insulation resistances.

4) For Level 2 applications at >=10 Vdc, capacitors can be used in accordance with the type, value and failure rate guidelines shown in the tables.

5) For Level 2 low voltage applications (< 10 Vdc), capacitor rated voltage should be at least 100 Vdc. Alternatively, parts rated at less than 100 Vdc can be used if flight lots are subjected to lot sample testing per Group B Subgroup 2 of MIL-PRF-123 (Humidity, Steady-State, Low Voltage). These recommendations are prompted by low voltage failure concerns (see note 3).

Revision History for MIL-PRF-20 Listing in the NPSL

05/21/98	Added column to the "styles" page to show the available capacitance range and rated voltages for quick reference.
03/20/98	Added Dimensional Drawings to this Section
11/28/97	Made changes indicating the specification conversion to a performance specification (MIL-PRF-20 instead of MIL-C-20).
11/28/97	Added additional application note clarification with respect to the low voltage application of these capacitors.
05/01/97	Initial Release of MIL-C-20 Section in the NPSL

Part Number Ordering Information:

Example P/N:

CCR75CH1R0CS

where,

CCR	75	C	H
Style (fixed, ceramic dielectric, temp. compensating, established reliability capacitors conforming to MIL-PRF-20)	Shape and Dimensions of the capacitor	Nominal Temperature Coefficient (C = 0 ppm/deg.C)	Ap

Part number ordering options are developed using the following criteria:

Style	Detail Specification		Approximate Tolerance Envelope
CCR05	MIL-PRF-20/35		F = 0 +/- 15 ppm/deg.C
CCR06	MIL-PRF-20/36		G = 0 +/- 30 ppm/deg.C
CCR07	MIL-PRF-20/37		H = 0 +/- 60 ppm/deg.C
CCR08	MIL-PRF-20/38		J = 0 +/- 120 ppm/deg.C
CCR75	MIL-PRF-20/27		K = 0 +/- 250 ppm/deg.C
CCR76	MIL-PRF-20/28		X = not practically measurable
CCR77	MIL-PRF-20/29		
CCR78	MIL-PRF-20/30		
CCR79	MIL-PRF-20/31		

Capacitance Tolerance		Failure Rate Level
B = +/- 0.1 pF		P = 0.1%/1000 hrs (See Level 2)
C = +/- 0.25 pF		R = 0.01%/1000 hrs (See Level 2)
D = +/- 0.5 pF		S = 0.001%/1000 hrs (See Level 1)
F = +/- 1%		
G = +/- 2%		
J = +/- 5%		
K = +/- 10%		

Capacitance Values:

Capacitance values in picofarads (pF) are contained in the following listing. When ordering, the first two digits represent significant figures and the last digit specifies the number of zeroes to follow. For example 101 indicates 100 pF and 102 indicates 1000 pF. The letter "R" is used to indicate a decimal point when required. For example 1R0 indicates 1.0 pF.

CCR05 Ceramic Capacitors

	Capacitance	Rated	Capacitance	Level 1	Level 2	
Part Number	Value (pF)	Voltage (V)	Tolerance (%)	(FRL)(#)	(FRL)(#)	Manufacturer
CCR05CX1R0%#	1.0	200	B, C	S	P, R	AVX, KEM
CCR05CX1R1%#	1.1	200	B, C	S	P, R	AVX, KEM
CCR05CX1R2%#	1.2	200	B, C	S	P, R	AVX, KEM
CCR05CX1R3%#	1.3	200	B, C	S	P, R	AVX, KEM
CCR05CX1R5%#	1.5	200	B, C	S	P, R	AVX, KEM
CCR05CX1R6%#	1.6	200	B, C	S	P, R	AVX, KEM
CCR05CX1R8%#	1.8	200	B, C	S	P, R	AVX, KEM
CCR05CX2R0%#	2.0	200	B, C	S	P, R	AVX, KEM
CCR05CK2R2%#	2.2	200	B, C	S	P, R	AVX, KEM
CCR05CK2R4%#	2.4	200	B, C	S	P, R	AVX, KEM
CCR05CK2R7%#	2.7	200	B, C, D	S	P, R	AVX, KEM
CCR05CK3R0%#	3.0	200	B, C, D	S	P, R	AVX, KEM
CCR05CK3R3%#	3.3	200	B, C, D	S	P, R	AVX, KEM

CCR05CK3R6%#	3.6	200	B, C, D	S	P, R	AVX, KEM
CCR05CK3R9%#	3.9	200	B, C, D	S	P, R	AVX, KEM
CCR05CJ4R3%#	4.3	200	B, C, D	S	P, R	AVX, KEM
CCR05CJ4R7%#	4.7	200	B, C, D	S	P, R	AVX, KEM
CCR05CJ5R1%#	5.1	200	B, C, D	S	P, R	AVX, KEM
	Capacitance	Rated	Capacitance	Level 1	Level 2	
Part Number	Value (pF)	Voltage (V)	Tolerance (%)	(FRL)(#)	(FRL)(#)	Manufacturer
CCR05CJ5R6%#	5.6	200	B, C, D	S	P, R	AVX, KEM
CCR05CJ6R2%#	6.2	200	B, C, D	S	P, R	AVX, KEM
CCR05CJ6R8%#	6.8	200	B, C, D	S	P, R	AVX, KEM
CCR05CJ7R5%#	7.5	200	B, C, D	S	P, R	AVX, KEM
CCR05CH8R2%#	8.2	200	B, C, D	S	P, R	AVX, KEM
CCR05CH9R1%#	9.1	200	B, C, D	S	P, R	AVX, KEM
CCR05CH100%#	10	200	F, G, J	S	P, R	AVX, KEM
CCR05CH110%#	11	200	F, G, J	S	P, R	AVX, KEM
CCR05CH120%#	12	200	F, G, J	S	P, R	AVX, KEM
CCR05CH130%#	13	200	F, G, J	S	P, R	AVX, KEM
CCR05CH150%#	15	200	F, G, J	S	P, R	AVX, KEM
CCR05CH160%#	16	200	F, G, J	S	P, R	AVX, KEM
CCR05CH180%#	18	200	F, G, J	S	P, R	AVX, KEM
CCR05CG200%#	20	200	F, G, J	S	P, R	AVX, KEM
CCR05CG220%#	22	200	F, G, J	S	P, R	AVX, KEM
CCR05CG240%#	24	200	F, G, J	S	P, R	AVX, KEM
CCR05CG270%#	27	200	F, G, J	S	P, R	AVX, KEM
CCR05CG300%#	30	200	F, G, J	S	P, R	AVX, KEM
	Capacitance	Rated	Capacitance	Level 1	Level 2	
Part Number	Value (pF)	Voltage (V)	Tolerance (%)	(FRL)(#)	(FRL)(#)	Manufacturer
CCR05CG330%#	33	200	F, G, J	S	P, R	AVX, KEM
CCR05CG360%#	36	200	F, G, J	S	P, R	AVX, KEM
CCR05CG390%#	39	200	F, G, J	S	P, R	AVX, KEM
CCR05CG430%#	43	200	F, G, J	S	P, R	AVX, KEM
CCR05CG470%#	47	200	F, G, J	S	P, R	AVX, KEM
CCR05CG510%#	51	200	F, G, J	S	P, R	AVX, KEM
CCR05CG560%#	56	200	F, G, J	S	P, R	AVX, KEM
CCR05CG620%#	62	200	F, G, J	S	P, R	AVX, KEM
CCR05CG680%#	68	200	F, G, J	S	P, R	AVX, KEM
CCR05CG750%#	75	200	F, G, J	S	P, R	AVX, KEM
CCR05CG820%#	82	200	F, G, J	S	P, R	AVX, KEM
CCR05CG910%#	91	200	F, G, J	S	P, R	AVX, KEM
CCR05CG101%#	100	200	F, G, J	S	P, R	AVX, KEM
CCR05CG111%#	110	200	F, G, J	S	P, R	AVX, KEM
CCR05CG121%#	120	200	F, G, J	S	P, R	AVX, KEM
CCR05CG131%#	130	200	F, G, J	S	P, R	AVX, KEM
CCR05CG151%#	150	200	F, G, J	S	P, R	AVX, KEM
CCR05CG161%#	160	200	F, G, J	S	P, R	AVX, KEM
	Capacitance	Rated	Capacitance	Level 1	Level 2	
Part Number	Value (pF)	Voltage (V)	Tolerance (%)	(FRL)(#)	(FRL)(#)	Manufacturer

CCR05CG181%#	180	200	F, G, J	S	P, R	AVX, KEM
CCR05CG201%#	200	200	F, G, J	S	P, R	AVX, KEM
CCR05CG221%#	220	200	F, G, J	S	P, R	AVX, KEM
CCR05CG241%#	240	200	F, G, J	S	P, R	AVX, KEM
CCR05CG271%#	270	200	F, G, J	S	P, R	AVX, KEM
CCR05CG301%#	300	200	F, G, J	S	P, R	AVX, KEM
CCR05CG331%#	330	200	F, G, J	S	P, R	AVX, KEM
CCR05CG361%#	360	100	F, G, J	S	P, R	AVX, KEM
CCR05CG391%#	390	100	F, G, J	S	P, R	AVX, KEM
CCR05CG431%#	430	100	F, G, J	S	P, R	AVX, KEM
CCR05CG471%#	470	100	F, G, J	S	P, R	AVX, KEM
CCR05CG511%#	510	100	F, G, J	S	P, R	AVX, KEM
CCR05CG561%#	560	100	F, G, J	S	P, R	AVX, KEM
CCR05CG621%#	620	100	F, G, J	S	P, R	AVX, KEM
CCR05CG681%#	680	100	F, G, J	S	P, R	AVX, KEM
CCR05CG751%#	750	100	F, G, J	S	P, R	AVX, KEM
CCR05CG821%#	820	100	F, G, J	S	P, R	AVX, KEM
CCR05CG911%#	910	100	F, G, J	S	P, R	AVX, KEM
	Capacitance	Rated	Capacitance	Level 1	Level 2	
Part Number	Value (pF)	Voltage (V)	Tolerance (%)	(FRL)(#)	(FRL)(#)	Manufacturer
CCR05CG102%#	1000	100	F, G, J	S	P, R	AVX, KEM
CCR05CG112%#	1100	100	F, G, J	S	P, R	AVX, KEM
CCR05CG122%#	1200	100	F, G, J	S	P, R	AVX, KEM
CCR05CG132%#	1300	100	F, G, J	S	P, R	AVX, KEM
CCR05CG152%#	1500	100	F, G, J	S	P, R	AVX, KEM
CCR05CG162%#	1600	100	F, G, J	S	P, R	AVX, KEM
CCR05CG182%#	1800	100	F, G, J	S	P, R	AVX, KEM
CCR05CG202%#	2000	50	F, G, J	S	P, R	AVX, KEM
CCR05CG222%#	2200	50	F, G, J	S	P, R	AVX, KEM
CCR05CG242%#	2400	50	F, G, J	S	P, R	AVX, KEM
CCR05CG272%#	2700	50	F, G, J	S	P, R	AVX, KEM
CCR05CG302%#	3000	50	F, G, J	S	P, R	AVX, KEM
CCR05CG332%#	3300	50	F, G, J	S	P, R	AVX, KEM
	Capacitance	Rated	Capacitance	Level 1	Level 2	
Part Number	Value (pF)	Voltage (V)	Tolerance (%)	(FRL)(#)	(FRL)(#)	Manufacturer

CCR06 Ceramic Capacitors

	Capacitance	Rated	Capacitance	Level 1	Level 2	
Part Number	Value (pF)	Voltage (V)	Tolerance (%)	(FRL)(#)	(FRL)(#)	Manufacturer
CCR06CG361%#	360	200	F, G, J	S	P, R	AVX, KEM
CCR06CG391%#	390	200	F, G, J	S	P, R	AVX, KEM
CCR06CG431%#	430	200	F, G, J	S	P, R	AVX, KEM
CCR06CG471%#	470	200	F, G, J	S	P, R	AVX, KEM
CCR06CG511%#	510	200	F, G, J	S	P, R	AVX, KEM

CCR06CG561%#	560	200	F, G, J	S	P, R	AVX, KEM
CCR06CG621%#	620	200	F, G, J	S	P, R	AVX, KEM
CCR06CG681%#	680	200	F, G, J	S	P, R	AVX, KEM
CCR06CG751%#	750	200	F, G, J	S	P, R	AVX, KEM
CCR06CG821%#	820	200	F, G, J	S	P, R	AVX, KEM
CCR06CG911%#	910	200	F, G, J	S	P, R	AVX, KEM
CCR06CG102%#	1000	200	F, G, J	S	P, R	AVX, KEM
CCR06CG112%#	1100	200	F, G, J	S	P, R	AVX, KEM
CCR06CG122%#	1200	200	F, G, J	S	P, R	AVX, KEM
CCR06CG132%#	1300	200	F, G, J	S	P, R	AVX, KEM
CCR06CG152%#	1500	200	F, G, J	S	P, R	AVX, KEM
CCR06CG162%#	1600	200	F, G, J	S	P, R	AVX, KEM
CCR06CG182%#	1800	200	F, G, J	S	P, R	AVX, KEM
	Capacitance	Rated	Capacitance	Level 1	Level 2	
Part Number	Value (pF)	Voltage (V)	Tolerance (%)	(FRL)(#)	(FRL)(#)	Manufacturer
CCR06CG202%#	2000	100	F, G, J	S	P, R	AVX, KEM
CCR06CG222%#	2200	100	F, G, J	S	P, R	AVX, KEM
CCR06CG242%#	2400	100	F, G, J	S	P, R	AVX, KEM
CCR06CG272%#	2700	100	F, G, J	S	P, R	AVX, KEM
CCR06CG302%#	3000	100	F, G, J	S	P, R	AVX, KEM
CCR06CG332%#	3300	100	F, G, J	S	P, R	AVX, KEM
CCR06CG362%#	3600	100	F, G, J	S	P, R	AVX, KEM
CCR06CG392%#	3900	100	F, G, J	S	P, R	AVX, KEM
CCR06CG432%#	4300	100	F, G, J	S	P, R	AVX, KEM
CCR06CG472%#	4700	100	F, G, J	S	P, R	AVX, KEM
CCR06CG512%#	5100	50	F, G, J	S	P, R	AVX, KEM
CCR06CG562%#	5600	50	F, G, J	S	P, R	AVX, KEM
CCR06CG622%#	6200	50	F, G, J	S	P, R	AVX, KEM
CCR06CG682%#	6800	50	F, G, J	S	P, R	AVX, KEM
CCR06CG752%#	7500	50	F, G, J	S	P, R	AVX, KEM
CCR06CG822%#	8200	50	F, G, J	S	P, R	AVX, KEM
CCR06CG912%#	9100	50	F, G, J	S	P, R	AVX, KEM
CCR06CG103%#	10000	50	F, G, J	S	P, R	AVX, KEM
	Capacitance	Rated	Capacitance	Level 1	Level 2	
Part Number	Value (pF)	Voltage (V)	Tolerance (%)	(FRL)(#)	(FRL)(#)	Manufacturer

CCR07 Ceramic Capacitors

	Capacitance	Rated	Capacitance	Level 1	Level 2	
Part Number	Value (pF)	Voltage (V)	Tolerance (%)	(FRL)(#)	(FRL)(#)	Manufacturer
CCR07CG222%#	2200	200	F, G, J, K	S	P, R	AVX, KEM
CCR07CG272%#	2700	200	F, G, J, K	S	P, R	AVX, KEM
CCR07CG332%#	3300	200	F, G, J, K	S	P, R	AVX, KEM
CCR07CG562%#	5600	100	F, G, J, K	S	P, R	AVX, KEM
CCR07CG682%#	6800	100	F, G, J, K	S	P, R	AVX, KEM

CCR07CG822%#	8200	100	F, G, J, K	S	P, R	AVX, KEM
CCR07CG103%#	10000	100	F, G, J, K	S	P, R	AVX, KEM
CCR07CG123%#	12000	100	F, G, J, K	S	P, R	AVX, KEM
CCR07CG153%#	15000	50	F, G, J, K	S	P, R	AVX, KEM
CCR07CG183%#	18000	50	F, G, J, K	S	P, R	AVX, KEM
CCR07CG223%#	22000	50	F, G, J, K	S	P, R	AVX, KEM

CCR08 Ceramic Capacitors

	Capacitance	Rated	Capacitance	Level 1	Level 2	
Part Number	Value (pF)	Voltage (V)	Tolerance (%)	(FRL)(#)	(FRL)(#)	Manufacturer
CCR08CG392%#	3900	200	G, J, K	S	P, R	AVX, KEM
CCR08CG472%#	4700	200	G, J, K	S	P, R	AVX, KEM
CCR08CG153%#	15000	100	G, J, K	S	P, R	AVX, KEM
CCR08CG183%#	18000	100	G, J, K	S	P, R	AVX, KEM
CCR08CG563%#	56000	50	G, J, K	S	P, R	AVX, KEM
CCR08CG683%#	68000	50	G, J, K	S	P, R	AVX, KEM

CCR75 Ceramic Capacitors

	Capacitance	Rated	Capacitance	Level 1	Level 2	
Part Number	Value (pF)	Voltage (V)	Tolerance (%)	(FRL)(#)	(FRL)(#)	Manufacturer
CCR75CX1R0%#	1.0	200	B, C	S	P, R	AVX, KEM
CCR75CX1R1%#	1.1	200	B, C	S	P, R	AVX, KEM
CCR75CX1R2%#	1.2	200	B, C	S	P, R	AVX, KEM
CCR75CX1R3%#	1.3	200	B, C	S	P, R	AVX, KEM
CCR75CX1R5%#	1.5	200	B, C	S	P, R	AVX, KEM
CCR75CX1R6%#	1.6	200	B, C	S	P, R	AVX, KEM
CCR75CX1R8%#	1.8	200	B, C	S	P, R	AVX, KEM
CCR75CX2R0%#	2.0	200	B, C	S	P, R	AVX, KEM
CCR75CK2R2%#	2.2	200	B, C	S	P, R	AVX, KEM
CCR75CK2R4%#	2.4	200	B, C	S	P, R	AVX, KEM
CCR75CK2R7%#	2.7	200	B, C, D	S	P, R	AVX, KEM
CCR75CK3R0%#	3.0	200	B, C, D	S	P, R	AVX, KEM
CCR75CK3R3%#	3.3	200	B, C, D	S	P, R	AVX, KEM
CCR75CK3R6%#	3.6	200	B, C, D	S	P, R	AVX, KEM
CCR75CK3R9%#	3.9	200	B, C, D	S	P, R	AVX, KEM
CCR75CJ4R3%#	4.3	200	B, C, D	S	P, R	AVX, KEM
CCR75CJ4R7%#	4.7	200	B, C, D	S	P, R	AVX, KEM
CCR75CJ5R1%#	5.1	200	B, C, D	S	P, R	AVX, KEM
	Capacitance	Rated	Capacitance	Level 1	Level 2	
Part Number	Value (pF)	Voltage (V)	Tolerance (%)	(FRL)(#)	(FRL)(#)	Manufacturer
CCR75CJ5R6%#	5.6	200	B, C, D	S	P, R	AVX, KEM
CCR75CJ6R2%#	6.2	200	B, C, D	S	P, R	AVX, KEM

CCR75CJ6R8%#	6.8	200	B, C, D	S	P, R	AVX, KEM
CCR75CJ7R5%#	7.5	200	B, C, D	S	P, R	AVX, KEM
CCR75CH8R2%#	8.2	200	B, C, D	S	P, R	AVX, KEM
CCR75CH9R1%#	9.1	200	B, C, D	S	P, R	AVX, KEM
CCR75CH100%#	10	200	F, G, J	S	P, R	AVX, KEM
CCR75CH110%#	11	200	F, G, J	S	P, R	AVX, KEM
CCR75CH120%#	12	200	F, G, J	S	P, R	AVX, KEM
CCR75CH130%#	13	200	F, G, J	S	P, R	AVX, KEM
CCR75CH150%#	15	200	F, G, J	S	P, R	AVX, KEM
CCR75CH160%#	16	200	F, G, J	S	P, R	AVX, KEM
CCR75CH180%#	18	200	F, G, J	S	P, R	AVX, KEM
CCR75CG200%#	20	200	F, G, J	S	P, R	AVX, KEM
CCR75CG220%#	22	200	F, G, J	S	P, R	AVX, KEM
CCR75CG240%#	24	200	F, G, J	S	P, R	AVX, KEM
CCR75CG270%#	27	200	F, G, J	S	P, R	AVX, KEM
CCR75CG300%#	30	200	F, G, J	S	P, R	AVX, KEM
	Capacitance	Rated	Capacitance	Level 1	Level 2	
Part Number	Value (pF)	Voltage (V)	Tolerance (%)	(FRL)(#)	(FRL)(#)	Manufacturer
CCR75CG330%#	33	200	F, G, J	S	P, R	AVX, KEM
CCR75CG360%#	36	200	F, G, J	S	P, R	AVX, KEM
CCR75CG390%#	39	200	F, G, J	S	P, R	AVX, KEM
CCR75CG430%#	43	200	F, G, J	S	P, R	AVX, KEM
CCR75CG470%#	47	200	F, G, J	S	P, R	AVX, KEM
CCR75CG510%#	51	200	F, G, J	S	P, R	AVX, KEM
CCR75CG560%#	56	200	F, G, J	S	P, R	AVX, KEM
CCR75CG620%#	62	200	F, G, J	S	P, R	AVX, KEM
CCR75CG680%#	68	200	F, G, J	S	P, R	AVX, KEM
CCR75CG820%#	82	100	F, G, J	S	P, R	AVX, KEM
CCR75CG910%#	91	100	F, G, J	S	P, R	AVX, KEM
CCR75CG101%#	100	100	F, G, J	S	P, R	AVX, KEM
CCR75CG111%#	110	100	F, G, J	S	P, R	AVX, KEM
CCR75CG121%#	120	100	F, G, J	S	P, R	AVX, KEM
CCR75CG131%#	130	100	F, G, J	S	P, R	AVX, KEM
CCR75CG151%#	150	100	F, G, J	S	P, R	AVX, KEM
CCR75CG161%#	160	100	F, G, J	S	P, R	AVX, KEM
CCR75CG181%#	180	100	F, G, J	S	P, R	AVX, KEM
	Capacitance	Rated	Capacitance	Level 1	Level 2	
Part Number	Value (pF)	Voltage (V)	Tolerance (%)	(FRL)(#)	(FRL)(#)	Manufacturer
CCR75CG201%#	200	100	F, G, J	S	P, R	AVX, KEM
CCR75CG221%#	220	100	F, G, J	S	P, R	AVX, KEM
CCR75CG271%#	270	50	F, G, J	S	P, R	AVX, KEM
CCR75CG301%#	300	50	F, G, J	S	P, R	AVX, KEM
CCR75CG331%#	330	50	F, G, J	S	P, R	AVX, KEM
CCR75CG361%#	360	50	F, G, J	S	P, R	AVX, KEM
CCR75CG391%#	390	50	F, G, J	S	P, R	AVX, KEM
CCR75CG431%#	430	50	F, G, J	S	P, R	AVX, KEM
CCR75CG471%#	470	50	F, G, J	S	P, R	AVX, KEM

CCR75CG511%#	510	50	F, G, J	S	P, R	AVX, KEM
CCR75CG561%#	560	50	F, G, J	S	P, R	AVX, KEM
CCR75CG621%#	620	50	F, G, J	S	P, R	AVX, KEM
CCR75CG681%#	680	50	F, G, J	S	P, R	AVX, KEM
	Capacitance	Rated	Capacitance	Level 1	Level 2	
Part Number	Value (pF)	Voltage (V)	Tolerance (%)	(FRL)(#)	(FRL)(#)	Manufacturer

CCR76 Ceramic Capacitors

	Capacitance	Rated	Capacitance	Level 1	Level 2	
Part Number	Value (pF)	Voltage (V)	Tolerance (%)	(FRL)(#)	(FRL)(#)	Manufacturer
CCR76CG820%#	82	200	F, G, J	S	P, R	AVX, KEM
CCR76CG910%#	91	200	F, G, J	S	P, R	AVX, KEM
CCR76CG101%#	100	200	F, G, J	S	P, R	AVX, KEM
CCR76CG111%#	110	200	F, G, J	S	P, R	AVX, KEM
CCR76CG121%#	120	200	F, G, J	S	P, R	AVX, KEM
CCR76CG271%#	270	100	F, G, J	S	P, R	AVX, KEM
CCR76CG301%#	300	100	F, G, J	S	P, R	AVX, KEM
CCR76CG331%#	330	100	F, G, J	S	P, R	AVX, KEM
CCR76CG361%#	360	100	F, G, J	S	P, R	AVX, KEM
CCR76CG391%#	390	100	F, G, J	S	P, R	AVX, KEM
CCR76CG751%#	750	50	F, G, J	S	P, R	AVX, KEM
CCR76CG821%#	820	50	F, G, J	S	P, R	AVX, KEM
CCR76CG911%#	910	50	F, G, J	S	P, R	AVX, KEM
CCR76CG102%#	1000	50	F, G, J	S	P, R	AVX, KEM
	Capacitance	Rated	Capacitance	Level 1	Level 2	
Part Number	Value (pF)	Voltage (V)	Tolerance (%)	(FRL)(#)	(FRL)(#)	Manufacturer

CCR77 Ceramic Capacitors

	Capacitance	Rated	Capacitance	Level 1	Level 2	
Part Number	Value (pF)	Voltage (V)	Tolerance (%)	(FRL)(#)	(FRL)(#)	Manufacturer
CCR77CG151%#	150	200	F, G, J	S	P, R	AVX, KEM
CCR77CG161%#	160	200	F, G, J	S	P, R	AVX, KEM
CCR77CG181%#	180	200	F, G, J	S	P, R	AVX, KEM
CCR77CG201%#	200	200	F, G, J	S	P, R	AVX, KEM
CCR77CG221%#	220	200	F, G, J	S	P, R	AVX, KEM
CCR77CG241%#	240	200	F, G, J	S	P, R	AVX, KEM
CCR77CG271%#	270	200	F, G, J	S	P, R	AVX, KEM
CCR77CG301%#	300	200	F, G, J	S	P, R	AVX, KEM
CCR77CG331%#	330	200	F, G, J	S	P, R	AVX, KEM
CCR77CG361%#	360	200	F, G, J	S	P, R	AVX, KEM
CCR77CG391%#	390	200	F, G, J	S	P, R	AVX, KEM
CCR77CG431%#	430	200	F, G, J	S	P, R	AVX, KEM

CCR77CG471%#	470	200	F, G, J	S	P, R	AVX, KEM
CCR77CG511%#	510	200	F, G, J	S	P, R	AVX, KEM
CCR77CG561%#	560	200	F, G, J	S	P, R	AVX, KEM
CCR77CG621%#	620	200	F, G, J	S	P, R	AVX, KEM
CCR77CG681%#	680	200	F, G, J	S	P, R	AVX, KEM
CCR77CG751%#	750	100	F, G, J	S	P, R	AVX, KEM
	Capacitance	Rated	Capacitance	Level 1	Level 2	
Part Number	Value (pF)	Voltage (V)	Tolerance (%)	(FRL)(#)	(FRL)(#)	Manufacturer
CCR77CG821%#	820	100	F, G, J	S	P, R	AVX, KEM
CCR77CG911%#	910	100	F, G, J	S	P, R	AVX, KEM
CCR77CG102%#	1000	100	F, G, J	S	P, R	AVX, KEM
CCR77CG112%#	1100	100	F, G, J	S	P, R	AVX, KEM
CCR77CG122%#	1200	100	F, G, J	S	P, R	AVX, KEM
CCR77CG132%#	1300	100	F, G, J	S	P, R	AVX, KEM
CCR77CG152%#	1500	100	F, G, J	S	P, R	AVX, KEM
CCR77CG162%#	1600	100	F, G, J	S	P, R	AVX, KEM
CCR77CG182%#	1800	100	F, G, J	S	P, R	AVX, KEM
CCR77CG202%#	2000	100	F, G, J	S	P, R	AVX, KEM
CCR77CG222%#	2200	100	F, G, J	S	P, R	AVX, KEM
CCR77CG242%#	2400	50	F, G, J	S	P, R	AVX, KEM
CCR77CG272%#	2700	50	F, G, J	S	P, R	AVX, KEM
CCR77CG302%#	3000	50	F, G, J	S	P, R	AVX, KEM
CCR77CG332%#	3300	50	F, G, J	S	P, R	AVX, KEM
CCR77CG362%#	3600	50	F, G, J	S	P, R	AVX, KEM
CCR77CG392%#	3900	50	F, G, J	S	P, R	AVX, KEM
CCR77CG432%#	4300	50	F, G, J	S	P, R	AVX, KEM
CCR77CG472%#	4700	50	F, G, J	S	P, R	AVX, KEM
CCR77CG512%#	5100	50	F, G, J, K	S	P, R	AVX, KEM
CCR77CG562%#	5600	50	F, G, J, K	S	P, R	AVX, KEM
	Capacitance	Rated	Capacitance	Level 1	Level 2	
Part Number	Value (pF)	Voltage (V)	Tolerance (%)	(FRL)(#)	(FRL)(#)	Manufacturer

CCR78 Ceramic Capacitors

	Capacitance	Rated	Capacitance	Level 1	Level 2	
Part Number	Value (pF)	Voltage (V)	Tolerance (%)	(FRL)(#)	(FRL)(#)	Manufacturer
CCR78CG821%#	820	200	F, G, J, K	S	P, R	AVX, KEM
CCR78CG102%#	1000	200	F, G, J, K	S	P, R	AVX, KEM
CCR78CG122%#	1200	200	F, G, J, K	S	P, R	AVX, KEM
CCR78CG152%#	1500	200	F, G, J, K	S	P, R	AVX, KEM
CCR78CG182%#	1800	200	F, G, J, K	S	P, R	AVX, KEM
CCR78CG222%#	2200	200	F, G, J, K	S	P, R	AVX, KEM
CCR78CG272%#	2700	200	F, G, J, K	S	P, R	AVX, KEM
CCR78CG332%#	3300	200	F, G, J, K	S	P, R	AVX, KEM
CCR78CG392%#	3900	100	F, G, J, K	S	P, R	AVX, KEM

CCR78CG472%#	4700	100	F, G, J, K	S	P, R	AVX, KEM
CCR78CG562%#	5600	100	F, G, J, K	S	P, R	AVX, KEM
CCR78CG682%#	6800	100	F, G, J, K	S	P, R	AVX, KEM
CCR78CG822%#	8200	100	F, G, J, K	S	P, R	AVX, KEM
CCR78CG103%#	10000	100	F, G, J, K	S	P, R	AVX, KEM
CCR78CG123%#	12000	100	F, G, J, K	S	P, R	AVX, KEM
CCR78CG153%#	15000	50	F, G, J, K	S	P, R	AVX, KEM
CCR78CG183%#	18000	50	F, G, J, K	S	P, R	AVX, KEM
CCR78CG223%#	22000	50	F, G, J, K	S	P, R	AVX, KEM
CCR78CG273%#	27000	50	F, G, J, K	S	P, R	AVX, KEM
	Capacitance	Rated	Capacitance	Level 1	Level 2	
Part Number	Value (pF)	Voltage (V)	Tolerance (%)	(FRL)(#)	(FRL)(#)	Manufacturer

CCR79 Ceramic Capacitors

	Capacitance	Rated	Capacitance	Level 1	Level 2	
Part Number	Value (pF)	Voltage (V)	Tolerance (%)	(FRL)(#)	(FRL)(#)	Manufacturer
CCR79CG392%#	3900	200	F, G, J, K	S	P, R	AVX, KEM
CCR79CG472%#	4700	200	F, G, J, K	S	P, R	AVX, KEM
CCR79CG562%#	5600	200	F, G, J, K	S	P, R	AVX, KEM
CCR79CG682%#	6800	200	F, G, J, K	S	P, R	AVX, KEM
CCR79CG822%#	8200	200	F, G, J, K	S	P, R	AVX, KEM
CCR79CG103%#	10000	200	F, G, J, K	S	P, R	AVX, KEM
CCR79CG153%#	15000	100	F, G, J, K	S	P, R	AVX, KEM
CCR79CG183%#	18000	100	F, G, J, K	S	P, R	AVX, KEM
CCR79CG223%#	22000	100	F, G, J, K	S	P, R	AVX, KEM
CCR79CG273%#	27000	100	F, G, J, K	S	P, R	AVX, KEM
CCR79CG333%#	33000	100	F, G, J, K	S	P, R	AVX, KEM
CCR79CG393%#	39000	100	F, G, J, K	S	P, R	AVX, KEM
CCR79CG473%#	47000	50	F, G, J, K	S	P, R	AVX, KEM
CCR79CG563%#	56000	50	F, G, J, K	S	P, R	AVX, KEM
CCR79CG683%#	68000	50	F, G, J, K	S	P, R	AVX, KEM
CCR79CG823%#	82000	50	F, G, J, K	S	P, R	AVX, KEM
	Capacitance	Rated	Capacitance	Level 1	Level 2	
Part Number	Value (pF)	Voltage (V)	Tolerance (%)	(FRL)(#)	(FRL)(#)	Manufacturer

Physical Dimensions Table

Axial Lead Designs

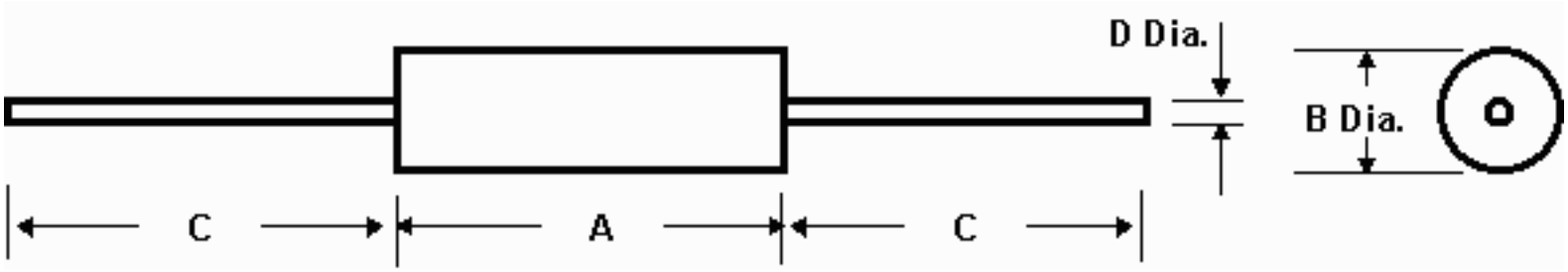

Capacitor Style	A	B	C	D
CCR75	0.160 +/- 0.010	0.090 +/- 0.010	1.250 min.	0.015 to 0.021
CCR76	0.250 +/- 0.010	0.090 +/- 0.010	1.250 min.	0.015 to 0.027
CCR77	0.390 +/- 0.010	0.140 +/- 0.010	1.250 min.	0.015 to 0.027
CCR78	0.500 +/- 0.020	0.250 +/- 0.010	1.250 min.	0.015 to 0.027
CCR79	0.690 +/- 0.010	0.350 +/- 0.010	1.250 min.	0.015 to 0.027

NOTES:

1. Dimensions are in inches.

Physical Dimensions Table

Radial Lead Designs

NOTES:

1. Dimensions are in inches.

CCR05 Style

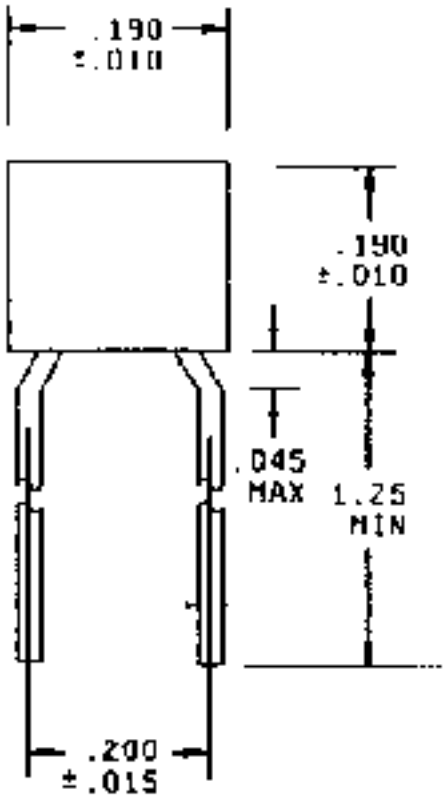

Lead Diameter: 0.023

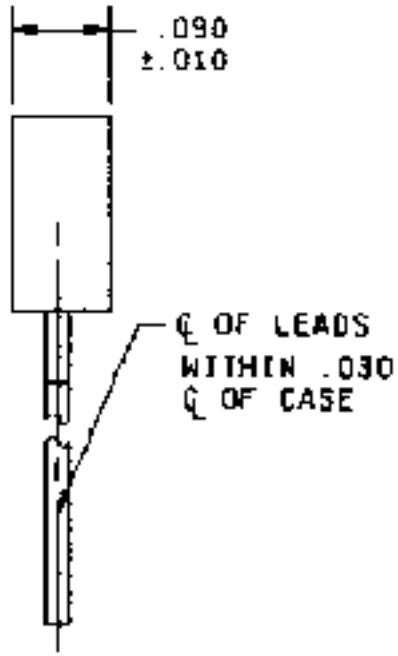

CCR06 Style

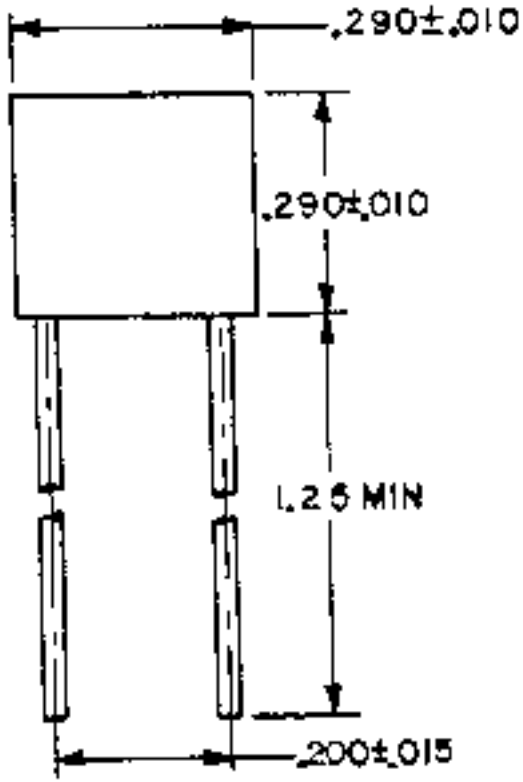

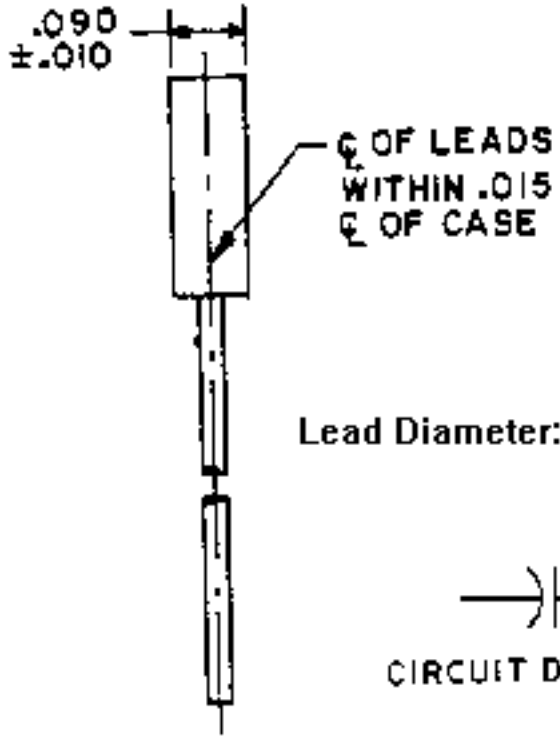

Lead Diameter: 0.023

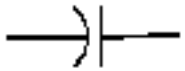

CIRCUIT DIAGRAM

CCR07 Style

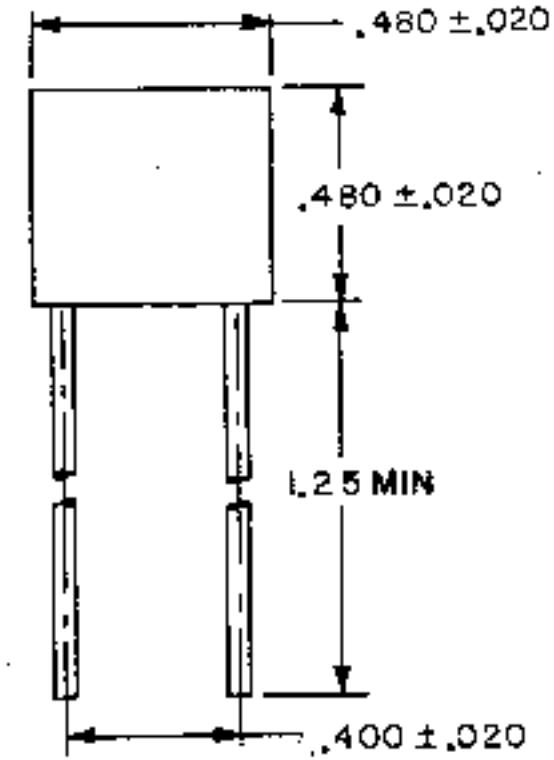

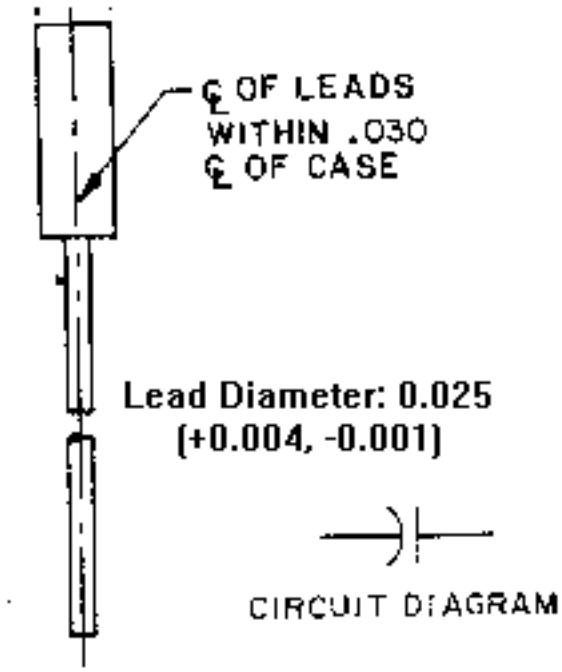

Thickness shall be 0.200 max for 0.1 uF and 0.140 ± 0.010 for all other values

CCR08 Style

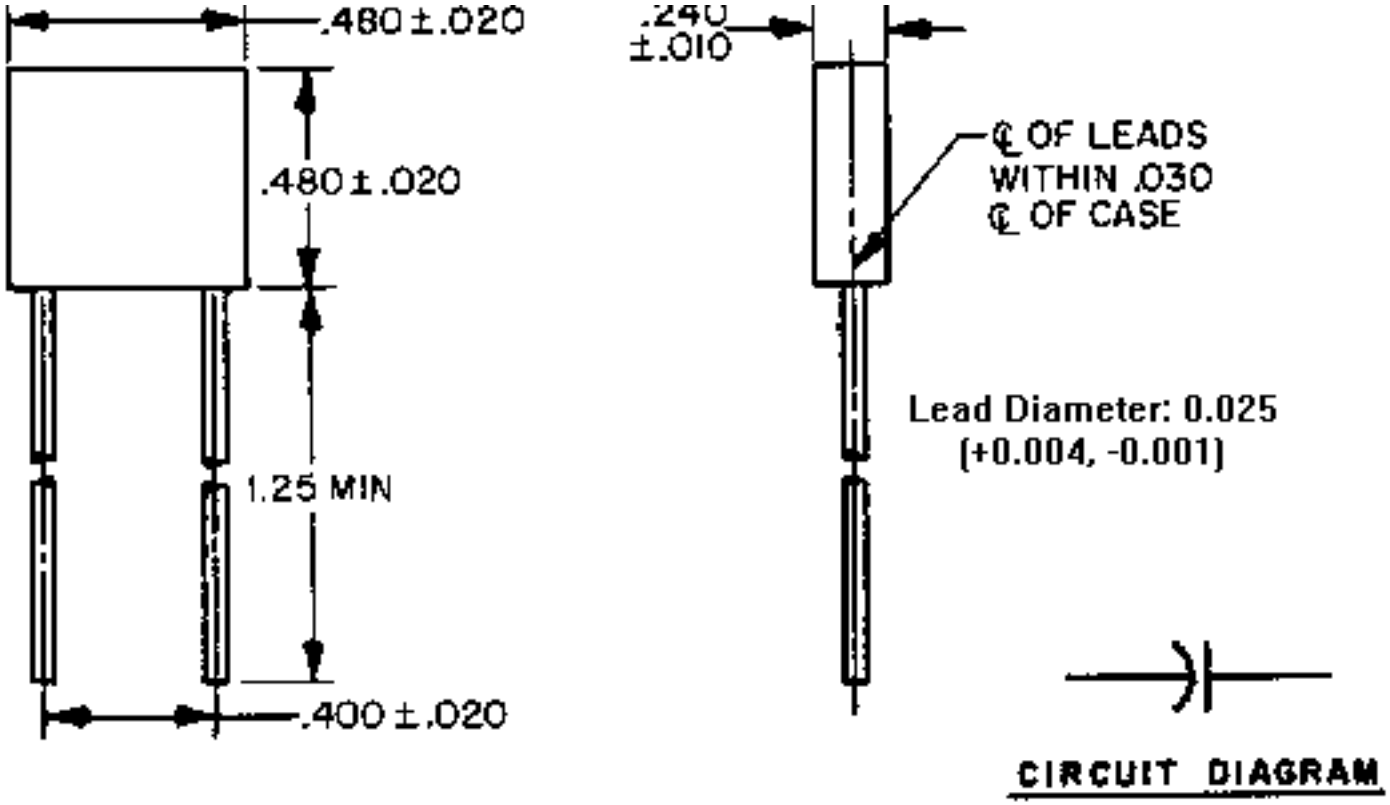

Physical Dimensions Table

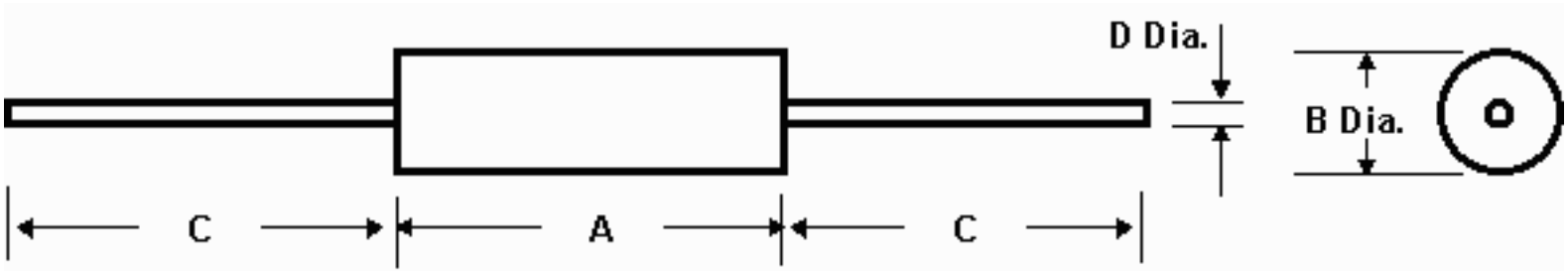

Capacitor Style	A	B	C	D
CCR75				
CCR76				
CCR77				
CCR78				
CCR79				

NOTES:

1. Dimensions are in inches.
2. Metric equivalents are given for general information only.
3. The maximum length is "clean lead" to "clean lead".
4. The end of the body shall be the point at which the body diameter equals the nearest drill size larger than 250% of the nominal lead diameter.
5. Lead length for new design and tape and reel packaging shall be 1.00" + 0.625", -0.0".
6. Lead concentric tolerance is to be measured at the point of lead egress from the resistor body.

Go to -

NEPP

|

NPSL

|

Capacitors

MIL-PRF-39014, CAPACITORS

Fixed, Ceramic Dielectric, Established Reliability

CKR Styles

Part Number/Ordering Explanation

Important! Application Notes

Revision History for MIL-PRF-39014 Listing in the NPSL

Last Updated 04/15/02

Click on the link below to see the associated parts selection listing:

Style	Detail Specification	Description (Click the Links Below for Dimensional Drawings)	Available Capacitance Range (Voltage)
CKR05	MIL-PRF-39014/1	Molded, Radial Lead	10 pF to 1,000 pF (200 V) 1,200 pF to 10,000 pF (100 V) 12,000 pF to 100,000 pF (50 V)
CKR06	MIL-PRF-39014/2	Molded, Radial Lead	1,200 pF to 10,000 pF (200 V) 12,000 pF to 100,000 pF (100 V) 120,000 pF to 470,000 pF (50 V)
CKR11	MIL-PRF-39014/5	Molded, Tubular, Axial Lead	10 pF to 4,700 pF (100 V) 5,600 pF to 10,000 pF (50 V)
CKR12	MIL-PRF-39014/5	Molded, Tubular, Axial Lead	5,600 pF to 10,000 pF (100 V) 11,000 pF to 47,000 pF (50 V)

CKR14	MIL-PRF-39014/5	Molded, Tubular, Axial Lead	12,000 pF to 47,000 pF (100 V) 56,000 pF to 100,000 pF (50 V)
CKR15	MIL-PRF-39014/5	Molded, Tubular, Axial Lead	56,000 pF to 470,000 pF (100 V)
CKR22	MIL-PRF-39014/22	Molded, 2 pin DIP	1 pF to 820 pF (200 V) 560 pF to 10,000 pF (100 V) 8,700 pF to 100,000 pF (50 V)
CKR23	MIL-PRF-39014/22	Molded, 2 pin DIP	560 pF to 10,000 pF (200 V) 2,700 pF to 100,000 pF (100 V) 4,700 pF to 220,000 pF (50 V)
CKR24	MIL-PRF-39014/22	Molded, 2 pin DIP	120,000 pF to 150,000 pF (100 V) 180,000 pF to 1,000,000 pF (50 V)

APPLICATION NOTES FOR MIL-PRF-39014

1) MIL-PRF-123 capacitors are space grade and are recommended for all Level 1 applications.

2) As an alternative to MIL-PRF-123, for Level 1 applications at >= 10 Vdc, MIL-PRF-20, MIL-PRF-39014, or MIL-PRF-55681 capacitors can be used in accordance with the type, value and failure rate guidelines shown in the tables.

3) As an alternative to MIL-PRF-123, for Level 1 low voltage applications (< 10 Vdc), MIL-PRF-20, MIL-PRF-39014, or MIL-PRF-55681 capacitors can be used, if capacitor rated voltage is at least 100 Vdc and flight lots are subjected to lot sample testing per Group B Subgroup 2 of MIL-PRF-123 (Humidity, Steady-State, Low Voltage). These recommendations stem from concerns about the low voltage failure mechanism which has been observed to occur in multilayer ceramic capacitors. In low voltage applications, multilayer ceramic capacitors with thin dielectrics and/or large voids, delaminations, inclusions, microcracks and other defects, may develop low and unstable insulation resistances.

4) For Level 2 applications at >=10 Vdc, capacitors can be used in accordance with the type, value and failure rate guidelines shown in the tables.

5) For Level 2 low voltage applications (< 10 Vdc), capacitor rated voltage should be at least 100 Vdc. Alternatively, parts rated at less than 100 Vdc can be used if flight lots are subjected to lot sample testing per Group B Subgroup 2 of MIL-PRF-123 (Humidity, Steady-State, Low Voltage). These recommendations are prompted by low voltage failure concerns (see note 3).

6) Values for MIL-PRF-39014/02, style CKR06 are limited to 0.47 uF maximum to avoid the use of parts with large areas of thin dielectric layers, that have been found to be particularly susceptible to the low voltage failure mechanism and also to exhibit decreased reliability at higher stress levels. In particular, the 1 uF, 50 V CKR06 capacitor (M39014/02-1419) is NOT recommended for flight applications due to the aggressive part construction designs employed that use very thin dielectric layers and a large number of electrodes. For applications that require a 1 uF, 50 V capacitor in this same package size, users are urged to consider the

MIL-PRF-123/2 CKS06

1 uF, 50 V capacitor. The MIL-PRF-123 specification is considered SPACE GRADE because of the part design and lot specific testing required by this high reliability specification.

Part Number Ordering Information, example and explanation:

M39014/01-1321 where,

M39014	/01	-1321
Military Specification Number	Detail Specification Number	Four-digit dash number which uniquely identifies the capacitance, tolerance, rated dc voltage, and failure rate level

Part number ordering options are developed using the following criteria:

Detail Specification:	Generic Designator	Description
MIL-PRF-39014/1	CKR05	Molded, Radial Leads
MIL-PRF-39014/2	CKR06	Molded, Radial Leads
MIL-PRF-39014/5	CKR11	Molded, Tubular, Axial Leads
MIL-PRF-39014/5	CKR12	Molded, Tubular, Axial Leads
MIL-PRF-39014/5	CKR14	Molded, Tubular, Axial Leads
MIL-PRF-39014/5	CKR15	Molded, Tubular, Axial Leads
MIL-PRF-39014/22	CKR22	Molded, 2 pin DIP
MIL-PRF-39014/22	CKR23	Molded, 2 pin DIP

MIL-PRF-39014/22	CKR24	Molded, 2 pin DIP

Failure Rate Levels:

S = 0.001%/1000 hours (

Level 2

)

Revision History for MIL-PRF-39014 Listing in the NPSL

04/15/02	Updated Application Note 6 regarding the exclusion of CKR06 capacitors above 1 uF in the NPSL. Update done to add a reference to the preferred CKS06 part made in accordance with MIL-PRF-123/2
05/21/98	Added column to the "styles" page to show the available capacitance range and rated voltages for quick reference. Corrected voltage rating for M39014/05-2254 to "50V" instead of "100V" Corrected
03/03/98	Added dimensional drawings to this section
02/03/98	Modified Application Note 6 to increase the maximum capacitance recommended for CKR06 parts from 0.33 uF to 0.47 uF Added comment to Note 6 regarding the extreme risk associated with the 1 uF, 50 V
11/28/97	Made changes indicating the specification conversion to a performance specification (MIL-PRF-39014 instead of MIL-C-39014) Added additional application note clarification with respect to the low
05/01/97	Initial Release on MIL-C-39014 Section in the NPSL

CKR05 Ceramic Capacitors

	Cap	Rated	Cap.	Level 2	
Part Number	Value (pF)	Voltage (V)	Tol. (+/- %)	(FRL)	Manufacturer
M39014/01-1321	10	200	10	S	AVX, KEM
M39014/01-1322	10	200	20	S	AVX, KEM
M39014/01-1323	12	200	10	S	AVX, KEM
M39014/01-1324	15	200	10	S	AVX, KEM
M39014/01-1325	15	200	20	S	AVX, KEM
M39014/01-1326	18	200	10	S	AVX, KEM
M39014/01-1327	22	200	10	S	AVX, KEM
M39014/01-1328	22	200	20	S	AVX, KEM
M39014/01-1329	27	200	10	S	AVX, KEM
M39014/01-1330	33	200	10	S	AVX, KEM
M39014/01-1331	33	200	20	S	AVX, KEM
M39014/01-1332	39	200	10	S	AVX, KEM
M39014/01-1333	47	200	10	S	AVX, KEM
M39014/01-1334	47	200	20	S	AVX, KEM
M39014/01-1335	56	200	10	S	AVX, KEM
M39014/01-1336	68	200	10	S	AVX, KEM
M39014/01-1337	68	200	20	S	AVX, KEM
M39014/01-1338	82	200	10	S	AVX, KEM
	Cap	Rated	Cap.	Level 2	
Part Number	Value (pF)	Voltage (V)	Tol. (+/- %)	(FRL)	Manufacturer
M39014/01-1339	100	200	10	S	AVX, KEM
M39014/01-1340	100	200	20	S	AVX, KEM
M39014/01-1324	120	200	10	S	AVX, KEM
M39014/01-1342	150	200	10	S	AVX, KEM

M39014/01-1343	150	200	20	S	AVX, KEM
M39014/01-1344	180	200	10	S	AVX, KEM
M39014/01-1345	220	200	10	S	AVX, KEM
M39014/01-1346	220	200	20	S	AVX, KEM
M39014/01-1347	270	200	10	S	AVX, KEM
M39014/01-1348	330	200	10	S	AVX, KEM
M39014/01-1349	330	200	20	S	AVX, KEM
M39014/01-1350	390	200	10	S	AVX, KEM
M39014/01-1351	470	200	10	S	AVX, KEM
M39014/01-1352	470	200	20	S	AVX, KEM
M39014/01-1353	560	200	10	S	AVX, KEM
M39014/01-1354	680	200	10	S	AVX, KEM
M39014/01-1355	680	200	20	S	AVX, KEM
M39014/01-1356	820	200	10	S	AVX, KEM
	Cap	Rated	Cap.	Level 2	
Part Number	Value (pF)	Voltage (V)	Tol. (+/- %)	(FRL)	Manufacturer
M39014/01-1357	1000	200	10	S	AVX, KEM
M39014/01-1358	1000	200	20	S	AVX, KEM
M39014/01-1359	1200	100	10	S	AVX, KEM
M39014/01-1360	1500	100	10	S	AVX, KEM
M39014/01-1561	1500	100	20	S	AVX, KEM
M39014/01-1562	1800	100	10	S	AVX, KEM
M39014/01-1563	2200	100	10	S	AVX, KEM
M39014/01-1564	2200	100	20	S	AVX, KEM
M39014/01-1565	2700	100	10	S	AVX, KEM
M39014/01-1566	3300	100	10	S	AVX, KEM
M39014/01-1567	3300	100	20	S	AVX, KEM
M39014/01-1568	3900	100	10	S	AVX, KEM
M39014/01-1569	4700	100	10	S	AVX, KEM
M39014/01-1570	4700	100	20	S	AVX, KEM
M39014/01-1571	5600	100	10	S	AVX, KEM
M39014/01-1572	6800	100	10	S	AVX, KEM
M39014/01-1573	6800	100	20	S	AVX, KEM
M39014/01-1574	8200	100	10	S	AVX, KEM
	Cap	Rated	Cap.	Level 2	
Part Number	Value (pF)	Voltage (V)	Tol. (+/- %)	(FRL)	Manufacturer
M39014/01-1575	10000	100	10	S	AVX, KEM
M39014/01-1576	10000	100	20	S	AVX, KEM
M39014/01-1577	12000	50	10	S	AVX, KEM
M39014/01-1578	15000	50	10	S	AVX, KEM
M39014/01-1579	15000	50	20	S	AVX, KEM
M39014/01-1580	18000	50	10	S	AVX, KEM
M39014/01-1581	22000	50	10	S	AVX, KEM
M39014/01-1582	22000	50	20	S	AVX, KEM
M39014/01-1583	27000	50	10	S	AVX, KEM
M39014/01-1584	33000	50	10	S	AVX, KEM
M39014/01-1585	33000	50	20	S	AVX, KEM

M39014/01-1586	39000	50	10	S	AVX, KEM
M39014/01-1587	47000	50	10	S	AVX, KEM
M39014/01-1588	47000	50	20	S	AVX, KEM
M39014/01-1589	56000	50	10	S	AVX, KEM
M39014/01-1590	68000	50	10	S	AVX, KEM
M39014/01-1591	68000	50	20	S	AVX, KEM
M39014/01-1592	82000	50	10	S	AVX, KEM
	Cap	Rated	Cap.	Level 2	
Part Number	Value (pF)	Voltage (V)	Tol. (+/- %)	(FRL)	Manufacturer
M39014/01-1593	100000	50	10	S	AVX, KEM
M39014/01-1594	100000	50	20	S	AVX, KEM

CKR06 Ceramic Capacitors

	Cap	Rated	Cap.	Level 2	
Part Number	Value (pF)	Voltage (V)	Tol. (+/- %)	(FRL)	Manufacturer
M39014/02-1321	1200	200	10	S	AVX, KEM
M39014/02-1322	1500	200	10	S	AVX, KEM
M39014/02-1323	1500	200	20	S	AVX, KEM
M39014/02-1326	2200	200	10	S	AVX, KEM
M39014/02-1327	2200	200	20	S	AVX, KEM
M39014/02-1328	2700	200	10	S	AVX, KEM
M39014/02-1329	3300	200	10	S	AVX, KEM
M39014/02-1330	3300	200	20	S	AVX, KEM
M39014/02-1331	3900	200	10	S	AVX, KEM
M39014/02-1332	4700	200	10	S	AVX, KEM
M39014/02-1333	4700	200	20	S	AVX, KEM
M39014/02-1334	5600	200	10	S	AVX, KEM
M39014/02-1335	6800	200	10	S	AVX, KEM
M39014/02-1336	6800	200	20	S	AVX, KEM
M39014/02-1337	8200	200	10	S	AVX, KEM
M39014/02-1338	10000	200	10	S	AVX, KEM
M39014/02-1339	10000	200	10	S	AVX, KEM
M39014/02-1351	12000	100	10	S	AVX, KEM
	Cap	Rated	Cap.	Level 2	
Part Number	Value (pF)	Voltage (V)	Tol. (+/- %)	(FRL)	Manufacturer
M39014/02-1340	15000	100	10	S	AVX, KEM
M39014/02-1341	18000	100	10	S	AVX, KEM
M39014/02-1342	22000	100	10	S	AVX, KEM
M39014/02-1352	27000	100	10	S	AVX, KEM
M39014/02-1343	33000	100	10	S	AVX, KEM
M39014/02-1344	39000	100	10	S	AVX, KEM
M39014/02-1345	47000	100	10	S	AVX, KEM
M39014/02-1346	56000	100	10	S	AVX, KEM
M39014/02-1347	68000	100	10	S	AVX, KEM

M39014/02-1349	82000	100	10	S	AVX, KEM
M39014/02-1350	100000	100	10	S	AVX, KEM
M39014/02-1353	120000	50	10	S	AVX, KEM
M39014/02-1354	150000	50	10	S	AVX, KEM
M39014/02-1355	180000	50	10	S	AVX, KEM
M39014/02-1356	220000	50	10	S	AVX, KEM
M39014/02-1357	270000	50	10	S	AVX, KEM
M39014/02-1358	330000	50	10	S	AVX, KEM
M39014/02-1359	390000	50	10	S	AVX, KEM
M39014/02-1360	470000	50	10	S	AVX, KEM
	Cap	Rated	Cap.	Level 2	
Part Number	Value (pF)	Voltage (V)	Tol. (+/- %)	(FRL)	Manufacturer

CKR11 Ceramic Capacitors

	Cap	Rated	Cap.	Level 2	
Part Number	Value (pF)	Voltage (V)	Tol. (+/- %)	(FRL)	Manufacturer
M39014/05-2201	10	100	10	S	AVX, KEM
M39014/05-2202	10	100	20	S	AVX, KEM
M39014/05-2203	12	100	10	S	AVX, KEM
M39014/05-2204	15	100	10	S	AVX, KEM
M39014/05-2205	15	100	20	S	AVX, KEM
M39014/05-2204	18	100	10	S	AVX, KEM
M39014/05-2207	22	100	10	S	AVX, KEM
M39014/05-2208	22	100	20	S	AVX, KEM
M39014/05-2209	27	100	10	S	AVX, KEM
M39014/05-2210	33	100	10	S	AVX, KEM
M39014/05-2211	33	100	20	S	AVX, KEM
M39014/05-2212	39	100	10	S	AVX, KEM
M39014/05-2213	47	100	10	S	AVX, KEM
M39014/05-2214	47	100	20	S	AVX, KEM
M39014/05-2215	56	100	10	S	AVX, KEM
M39014/05-2216	68	100	10	S	AVX, KEM
	Cap	Rated	Cap.	Level 2	
Part Number	Value (pF)	Voltage (V)	Tol. (+/- %)	(FRL)	Manufacturer
M39014/05-2217	68	100	20	S	AVX, KEM
M39014/05-2218	82	100	10	S	AVX, KEM
M39014/05-2219	100	100	10	S	AVX, KEM
M39014/05-2220	100	100	20	S	AVX, KEM
M39014/05-2221	120	100	10	S	AVX, KEM
M39014/05-2222	150	100	10	S	AVX, KEM
M39014/05-2223	150	100	20	S	AVX, KEM
M39014/05-2224	180	100	10	S	AVX, KEM
M39014/05-2225	220	100	10	S	AVX, KEM
M39014/05-2226	220	100	20	S	AVX, KEM

M39014/05-2227	270	100	10	S	AVX, KEM
M39014/05-2228	330	100	10	S	AVX, KEM
M39014/05-2229	330	100	20	S	AVX, KEM
M39014/05-2230	390	100	10	S	AVX, KEM
M39014/05-2231	470	100	10	S	AVX, KEM
M39014/05-2232	470	100	20	S	AVX, KEM
M39014/05-2233	560	100	10	S	AVX, KEM
M39014/05-2234	680	100	10	S	AVX, KEM
	Cap	Rated	Cap.	Level 2	
Part Number	Value (pF)	Voltage (V)	Tol. (+/- %)	(FRL)	Manufacturer
M39014/05-2235	680	100	20	S	AVX, KEM
M39014/05-2236	820	100	10	S	AVX, KEM
M39014/05-2237	1000	100	10	S	AVX, KEM
M39014/05-2238	1000	100	20	S	AVX, KEM
M39014/05-2239	1200	100	10	S	AVX, KEM
M39014/05-2240	1500	100	10	S	AVX, KEM
M39014/05-2241	1500	100	20	S	AVX, KEM
M39014/05-2242	1800	100	10	S	AVX, KEM
M39014/05-2243	2100	100	10	S	AVX, KEM
M39014/05-2244	2100	100	20	S	AVX, KEM
M39014/05-2245	2700	100	10	S	AVX, KEM
M39014/05-2246	3300	100	10	S	AVX, KEM
M39014/05-2247	3300	100	20	S	AVX, KEM
M39014/05-2248	3900	100	10	S	AVX, KEM
M39014/05-2249	4700	100	10	S	AVX, KEM
M39014/05-2250	4700	100	20	S	AVX, KEM
M39014/05-2251	5600	50	10	S	AVX, KEM
M39014/05-2252	6800	50	10	S	AVX, KEM
	Cap	Rated	Cap.	Level 2	
Part Number	Value (pF)	Voltage (V)	Tol. (+/- %)	(FRL)	Manufacturer
M39014/05-2253	6800	50	20	S	AVX, KEM
M39014/05-2254	8200	50	10	S	AVX, KEM
M39014/05-2255	10000	50	10	S	AVX, KEM
M39014/05-2256	10000	50	20	S	AVX, KEM
	Cap	Rated	Cap.	Level 2	
Part Number	Value (pF)	Voltage (V)	Tol. (+/- %)	(FRL)	Manufacturer

CKR12 Ceramic Capacitors

	Cap	Rated	Cap.	Level 2	
Part Number	Value (pF)	Voltage (V)	Tol. (+/- %)	(FRL)	Manufacturer
M39014/05-2257	5600	100	10	S	AVX, KEM
M39014/05-2258	6800	100	10	S	AVX, KEM
M39014/05-2259	6800	100	20	S	AVX, KEM
M39014/05-2260	8200	100	10	S	AVX, KEM

M39014/05-2261	10000	100	10	S	AVX, KEM
M39014/05-2262	10000	100	20	S	AVX, KEM
M39014/05-2263	11000	50	10	S	AVX, KEM
M39014/05-2264	15000	50	10	S	AVX, KEM
M39014/05-2265	15000	50	20	S	AVX, KEM
M39014/05-2266	18000	50	10	S	AVX, KEM
M39014/05-2267	21000	50	10	S	AVX, KEM
M39014/05-2268	21000	50	20	S	AVX, KEM
M39014/05-2269	27000	50	10	S	AVX, KEM
M39014/05-2270	33000	50	10	S	AVX, KEM
M39014/05-2271	33000	50	20	S	AVX, KEM
M39014/05-2272	39000	50	10	S	AVX, KEM
M39014/05-2273	47000	50	10	S	AVX, KEM
M39014/05-2274	47000	50	20	S	AVX, KEM
	Cap	Rated	Cap.	Level 2	
Part Number	Value (pF)	Voltage (V)	Tol. (+/- %)	(FRL)	Manufacturer

CKR14 Ceramic Capacitors

	Cap	Rated	Cap.	Level 2	
Part Number	Value (pF)	Voltage (V)	Tol. (+/- %)	(FRL)	Manufacturer
M39014/05-2275	12000	100	10	S	AVX, KEM
M39014/05-2276	15000	100	10	S	AVX, KEM
M39014/05-2277	15000	100	20	S	AVX, KEM
M39014/05-2278	18000	100	10	S	AVX, KEM
M39014/05-2279	22000	100	10	S	AVX, KEM
M39014/05-2280	22000	100	20	S	AVX, KEM
M39014/05-2281	27000	100	10	S	AVX, KEM
M39014/05-2282	33000	100	10	S	AVX, KEM
M39014/05-2283	33000	100	20	S	AVX, KEM
M39014/05-2284	39000	100	10	S	AVX, KEM
M39014/05-2285	47000	100	10	S	AVX, KEM
M39014/05-2286	47000	100	20	S	AVX, KEM
M39014/05-2287	56000	50	10	S	AVX, KEM
M39014/05-2288	68000	50	10	S	AVX, KEM
M39014/05-2289	68000	50	20	S	AVX, KEM
M39014/05-2290	82000	50	10	S	AVX, KEM
M39014/05-2291	100000	50	10	S	AVX, KEM
M39014/05-2292	100000	50	20	S	AVX, KEM
	Cap	Rated	Cap.	Level 2	
Part Number	Value (pF)	Voltage (V)	Tol. (+/- %)	(FRL)	Manufacturer

CKR15 Ceramic Capacitors

	Cap	Rated	Cap.	Level 2	
Part Number	Value (pF)	Voltage (V)	Tol. (+/- %)	(FRL)	Manufacturer
M39014/05-2306	56000	100	10	S	AVX, KEM
M39014/05-2307	68000	100	10	S	AVX, KEM
M39014/05-2308	68000	100	20	S	AVX, KEM
M39014/05-2310	100000	100	10	S	AVX, KEM
M39014/05-2311	100000	100	20	S	AVX, KEM
M39014/05-2312	120000	100	10	S	AVX, KEM
M39014/05-2313	150000	100	10	S	AVX, KEM
M39014/05-2314	150000	100	20	S	AVX, KEM
M39014/05-2315	180000	100	10	S	AVX, KEM
M39014/05-2316	220000	100	10	S	AVX, KEM
M39014/05-2317	220000	100	20	S	AVX, KEM
M39014/05-2318	270000	100	10	S	AVX, KEM
M39014/05-2319	330000	100	10	S	AVX, KEM
M39014/05-2320	330000	100	20	S	AVX, KEM
M39014/05-2321	470000	100	10	S	AVX, KEM
M39014/05-2322	470000	100	20	S	AVX, KEM
	Cap	Rated	Cap.	Level 2	
Part Number	Value (pF)	Voltage (V)	Tol. (+/- %)	(FRL)	Manufacturer

CKR22 Ceramic Capacitors

	Cap	Rated	Cap.	Level 2	
Part Number	Value (pF)	Voltage (V)	Tol. (+/- %)	(FRL)	Manufacturer
M39014/22-0901	1.0	200	0.5 pF	S	AVX
M39014/22-0904	1.2	200	0.5 pF	S	AVX
M39014/22-0907	1.5	200	0.5 pF	S	AVX
M39014/22-0910	1.8	200	0.5 pF	S	AVX
M39014/22-0913	2.2	200	0.5 pF	S	AVX
M39014/22-0916	2.7	200	0.5 pF	S	AVX
M39014/22-0919	3.3	200	0.5 pF	S	AVX
M39014/22-0922	3.9	200	0.5 pF	S	AVX
M39014/22-0925	4.7	200	0.5 pF	S	AVX
M39014/22-0928	5.6	200	0.5 pF	S	AVX
M39014/22-0931	6.8	200	0.5 pF	S	AVX
M39014/22-0934	8.2	200	0.5 pF	S	AVX
M39014/22-0937	10	200	0.5 pF	S	AVX
M39014/22-0938	10	200	5.0	S	AVX
M39014/22-0939	10	200	10	S	AVX
M39014/22-0940	12	200	0.5 pF	S	AVX
M39014/22-0941	12	200	5.0	S	AVX
M39014/22-0942	12	200	10	S	AVX
	Cap	Rated	Cap.	Level 2	
Part Number	Value (pF)	Voltage (V)	Tol. (+/- %)	(FRL)	Manufacturer

M39014/22-0943	15	200	0.5 pF	S	AVX
M39014/22-0944	15	200	5.0	S	AVX
M39014/22-0945	15	200	10	S	AVX
M39014/22-0946	18	200	0.5 pF	S	AVX
M39014/22-0947	18	200	5.0	S	AVX
M39014/22-0948	18	200	10	S	AVX
M39014/22-0949	22	200	0.5 pF	S	AVX
M39014/22-0950	22	200	5.0	S	AVX
M39014/22-0951	22	200	10	S	AVX
M39014/22-0952	27	200	0.5 pF	S	AVX
M39014/22-0953	27	200	5.0	S	AVX
M39014/22-0954	27	200	10	S	AVX
M39014/22-0955	33	200	0.5 pF	S	AVX
M39014/22-0956	33	200	5.0	S	AVX
M39014/22-0957	33	200	10	S	AVX
M39014/22-0958	39	200	0.5 pF	S	AVX
M39014/22-0959	39	200	5.0	S	AVX
M39014/22-0960	39	200	10	S	AVX
	Cap	Rated	Cap.	Level 2	
Part Number	Value (pF)	Voltage (V)	Tol. (+/- %)	(FRL)	Manufacturer
M39014/22-0961	47	200	0.5 pF	S	AVX
M39014/22-0962	47	200	5.0	S	AVX
M39014/22-0963	47	200	10	S	AVX
M39014/22-0964	56	200	0.5 pF	S	AVX
M39014/22-0965	56	200	5.0	S	AVX
M39014/22-0966	56	200	10	S	AVX
M39014/22-0967	68	200	1.0	S	AVX
M39014/22-0968	68	200	5.0	S	AVX
M39014/22-0969	68	200	10	S	AVX
M39014/22-0970	82	200	1.0	S	AVX
M39014/22-0971	82	200	5.0	S	AVX
M39014/22-0972	82	200	10	S	AVX
M39014/22-0973	100	200	1.0	S	AVX
M39014/22-0974	100	200	5.0	S	AVX
M39014/22-0975	100	200	10	S	AVX
M39014/22-0976	120	200	1.0	S	AVX
M39014/22-0977	120	200	5.0	S	AVX
M39014/22-0978	120	200	10	S	AVX
	Cap	Rated	Cap.	Level 2	
Part Number	Value (pF)	Voltage (V)	Tol. (+/- %)	(FRL)	Manufacturer
M39014/22-0979	150	200	1.0	S	AVX
M39014/22-0980	150	200	5.0	S	AVX
M39014/22-0981	150	200	10	S	AVX
M39014/22-0982	180	200	1.0	S	AVX
M39014/22-0983	180	200	5.0	S	AVX
M39014/22-0984	180	200	10	S	AVX
M39014/22-0985	220	200	1.0	S	AVX

M39014/22-0986	220	200	5.0	S	AVX
M39014/22-0987	220	200	10	S	AVX
M39014/22-0988	270	200	1.0	S	AVX
M39014/22-0989	270	200	5.0	S	AVX
M39014/22-0990	270	200	10	S	AVX
M39014/22-0991	330	200	1.0	S	AVX
M39014/22-0992	330	200	5.0	S	AVX
M39014/22-0993	330	200	10	S	AVX
M39014/22-0994	390	200	1.0	S	AVX
M39014/22-0995	390	200	5.0	S	AVX
M39014/22-0996	390	200	10	S	AVX
	Cap	Rated	Cap.	Level 2	
Part Number	Value (pF)	Voltage (V)	Tol. (+/- %)	(FRL)	Manufacturer
M39014/22-0997	470	200	1.0	S	AVX
M39014/22-0998	470	200	5.0	S	AVX
M39014/22-0999	470	200	10	S	AVX
M39014/22-1000	560	100	1.0	S	AVX
M39014/22-1001	560	100	5.0	S	AVX
M39014/22-1002	560	100	10	S	AVX
M39014/22-1003	680	100	1.0	S	AVX
M39014/22-1004	680	100	5.0	S	AVX
M39014/22-1005	680	100	10	S	AVX
M39014/22-1006	820	100	1.0	S	AVX
M39014/22-1007	820	100	5.0	S	AVX
M39014/22-1008	820	100	10	S	AVX
M39014/22-1009	1000	100	1.0	S	AVX
M39014/22-1010	1000	100	5.0	S	AVX
M39014/22-1011	1000	100	10	S	AVX
M39014/22-1012	1200	100	1.0	S	AVX
M39014/22-1013	1200	100	5.0	S	AVX
M39014/22-1014	1200	100	10	S	AVX
	Cap	Rated	Cap.	Level 2	
Part Number	Value (pF)	Voltage (V)	Tol. (+/- %)	(FRL)	Manufacturer
M39014/22-1015	1500	100	1.0	S	AVX
M39014/22-1016	1500	100	5.0	S	AVX
M39014/22-1017	1500	100	10	S	AVX
M39014/22-1018	1800	100	1.0	S	AVX
M39014/22-1019	1800	100	5.0	S	AVX
M39014/22-1020	1800	100	10	S	AVX
M39014/22-1021	2200	100	1.0	S	AVX
M39014/22-1022	2200	100	5.0	S	AVX
M39014/22-1023	2200	100	10	S	AVX
M39014/22-1024	2700	50	1.0	S	AVX
M39014/22-1025	2700	50	5.0	S	AVX
M39014/22-1026	2700	50	10	S	AVX
M39014/22-1027	3300	50	1.0	S	AVX
M39014/22-1028	3300	50	5.0	S	AVX

M39014/22-1029	3300	50	10	S	AVX
M39014/22-1030	3900	50	1.0	S	AVX
M39014/22-1031	3900	50	5.0	S	AVX
M39014/22-1032	3900	50	10	S	AVX
	Cap	Rated	Cap.	Level 2	
Part Number	Value (pF)	Voltage (V)	Tol. (+/- %)	(FRL)	Manufacturer
M39014/22-1033	4700	50	1.0	S	AVX
M39014/22-1034	4700	50	5.0	S	AVX
M39014/22-1035	4700	50	10	S	AVX
M39014/22-1036	5600	50	1.0	S	AVX
M39014/22-1037	5600	50	5.0	S	AVX
M39014/22-1038	5600	50	10	S	AVX
M39014/22-1039	6800	50	1.0	S	AVX
M39014/22-1040	6800	50	5.0	S	AVX
M39014/22-1041	6800	50	10	S	AVX
M39014/22-1042	8200	50	1.0	S	AVX
M39014/22-1043	8200	50	5.0	S	AVX
M39014/22-1044	8200	50	10	S	AVX
M39014/22-1045	10000	50	1.0	S	AVX
M39014/22-1046	10000	50	5.0	S	AVX
M39014/22-1047	10000	50	10	S	AVX
M39014/22-1048	270	200	10	S	AVX
M39014/22-1049	330	200	10	S	AVX
M39014/22-1050	330	200	20	S	AVX
	Cap	Rated	Cap.	Level 2	
Part Number	Value (pF)	Voltage (V)	Tol. (+/- %)	(FRL)	Manufacturer
M39014/22-1051	390	200	10	S	AVX
M39014/22-1052	470	200	10	S	AVX
M39014/22-1053	470	200	20	S	AVX
M39014/22-1054	560	200	10	S	AVX
M39014/22-1055	680	200	10	S	AVX
M39014/22-1056	680	200	20	S	AVX
M39014/22-1057	820	200	10	S	AVX
M39014/22-1058	1000	100	10	S	AVX
M39014/22-1059	1000	100	20	S	AVX
M39014/22-1060	1200	100	10	S	AVX
M39014/22-1061	1500	100	10	S	AVX
M39014/22-1062	1500	100	20	S	AVX
M39014/22-1063	1800	100	10	S	AVX
M39014/22-1064	2200	100	10	S	AVX
M39014/22-1065	2200	100	20	S	AVX
M39014/22-1066	2700	100	10	S	AVX
M39014/22-1067	3300	100	10	S	AVX
M39014/22-1068	3300	100	20	S	AVX
	Cap	Rated	Cap.	Level 2	
Part Number	Value (pF)	Voltage (V)	Tol. (+/- %)	(FRL)	Manufacturer
M39014/22-1069	3900	100	10	S	AVX

M39014/22-1070	4700	100	10	S	AVX
M39014/22-1071	4700	100	20	S	AVX
M39014/22-1072	5600	100	10	S	AVX
M39014/22-1073	6800	100	10	S	AVX
M39014/22-1074	6800	100	20	S	AVX
M39014/22-1075	8200	100	10	S	AVX
M39014/22-1076	10000	100	10	S	AVX
M39014/22-1077	10000	100	20	S	AVX
M39014/22-1078	12000	50	10	S	AVX
M39014/22-1079	15000	50	10	S	AVX
M39014/22-1080	15000	50	20	S	AVX
M39014/22-1081	18000	50	10	S	AVX
M39014/22-1082	22000	50	10	S	AVX
M39014/22-1083	22000	50	20	S	AVX
M39014/22-1084	27000	50	10	S	AVX
M39014/22-1085	33000	50	10	S	AVX
M39014/22-1086	33000	50	20	S	AVX
	Cap	Rated	Cap.	Level 2	
Part Number	Value (pF)	Voltage (V)	Tol. (+/- %)	(FRL)	Manufacturer
M39014/22-1087	39000	50	10	S	AVX
M39014/22-1088	47000	50	10	S	AVX
M39014/22-1089	47000	50	20	S	AVX
M39014/22-1090	56000	50	10	S	AVX
M39014/22-1091	68000	50	10	S	AVX
M39014/22-1092	68000	50	20	S	AVX
M39014/22-1093	82000	50	10	S	AVX
M39014/22-1094	100000	50	10	S	AVX
M39014/22-1095	100000	50	20	S	AVX
	Cap	Rated	Cap.	Level 2	
Part Number	Value (pF)	Voltage (V)	Tol. (+/- %)	(FRL)	Manufacturer

CKR23 Ceramic Capacitors

	Cap	Rated	Cap.	Level 2	
Part Number	Value (pF)	Voltage (V)	Tol. (+/- %)	(FRL)	Manufacturer
M39014/22-1158	560	200	1.0	S	AVX
M39014/22-1159	560	200	5.0	S	AVX
M39014/22-1160	560	200	10	S	AVX
M39014/22-1161	680	200	1.0	S	AVX
M39014/22-1162	680	200	5.0	S	AVX
M39014/22-1163	680	200	10	S	AVX
M39014/22-1164	820	200	1.0	S	AVX
M39014/22-1165	820	200	5.0	S	AVX
M39014/22-1166	820	200	10	S	AVX
M39014/22-1167	1000	200	1.0	S	AVX

M39014/22-1168	1000	200	5.0	S	AVX
M39014/22-1169	1000	200	10	S	AVX
M39014/22-1170	1200	200	1.0	S	AVX
M39014/22-1171	1200	200	5.0	S	AVX
M39014/22-1172	1200	200	10	S	AVX
M39014/22-1173	2700	100	1.0	S	AVX
M39014/22-1174	2700	100	5.0	S	AVX
M39014/22-1175	2700	100	10	S	AVX
	Cap	Rated	Cap.	Level 2	
Part Number	Value (pF)	Voltage (V)	Tol. (+/- %)	(FRL)	Manufacturer
M39014/22-1176	3300	100	1.0	S	AVX
M39014/22-1177	3300	100	5.0	S	AVX
M39014/22-1178	3300	100	10	S	AVX
M39014/22-1179	4700	50	1.0	S	AVX
M39014/22-1180	4700	50	5.0	S	AVX
M39014/22-1181	4700	50	10	S	AVX
M39014/22-1182	5600	50	1.0	S	AVX
M39014/22-1183	5600	50	5.0	S	AVX
M39014/22-1184	5600	50	10	S	AVX
M39014/22-1185	6800	50	1.0	S	AVX
M39014/22-1186	6800	50	5.0	S	AVX
M39014/22-1187	6800	50	10	S	AVX
M39014/22-1188	8200	50	1.0	S	AVX
M39014/22-1189	8200	50	5.0	S	AVX
M39014/22-1190	8200	50	10	S	AVX
M39014/22-1191	10000	50	1.0	S	AVX
M39014/22-1192	10000	50	5.0	S	AVX
M39014/22-1193	10000	50	10	S	AVX
	Cap	Rated	Cap.	Level 2	
Part Number	Value (pF)	Voltage (V)	Tol. (+/- %)	(FRL)	Manufacturer
M39014/22-1096	1000	200	10	S	AVX
M39014/22-1097	1000	200	20	S	AVX
M39014/22-1098	1200	200	10	S	AVX
M39014/22-1099	1500	200	10	S	AVX
M39014/22-1100	1500	200	20	S	AVX
M39014/22-1101	1800	200	10	S	AVX
M39014/22-1102	2200	200	10	S	AVX
M39014/22-1103	2200	200	20	S	AVX
M39014/22-1104	2700	200	10	S	AVX
M39014/22-1105	3300	200	10	S	AVX
M39014/22-1106	3300	200	20	S	AVX
M39014/22-1107	3900	200	10	S	AVX
M39014/22-1108	4700	200	10	S	AVX
M39014/22-1109	4700	200	20	S	AVX
M39014/22-1110	5600	200	10	S	AVX
M39014/22-1111	6800	200	10	S	AVX
M39014/22-1112	6800	200	20	S	AVX

M39014/22-1113	8200	200	10	S	AVX
	Cap	Rated	Cap.	Level 2	
Part Number	Value (pF)	Voltage (V)	Tol. (+/- %)	(FRL)	Manufacturer
M39014/22-1114	10000	200	10	S	AVX
M39014/22-1115	10000	200	20	S	AVX
M39014/22-1116	12000	100	10	S	AVX
M39014/22-1117	15000	100	10	S	AVX
M39014/22-1118	15000	100	20	S	AVX
M39014/22-1119	18000	100	10	S	AVX
M39014/22-1120	22000	100	10	S	AVX
M39014/22-1121	22000	100	20	S	AVX
M39014/22-1122	27000	100	10	S	AVX
M39014/22-1123	33000	100	10	S	AVX
M39014/22-1124	33000	100	20	S	AVX
M39014/22-1125	39000	100	10	S	AVX
M39014/22-1126	47000	100	10	S	AVX
M39014/22-1127	47000	100	20	S	AVX
M39014/22-1128	56000	100	10	S	AVX
M39014/22-1129	68000	100	10	S	AVX
M39014/22-1130	68000	100	20	S	AVX
M39014/22-1131	82000	100	10	S	AVX
	Cap	Rated	Cap.	Level 2	
Part Number	Value (pF)	Voltage (V)	Tol. (+/- %)	(FRL)	Manufacturer
M39014/22-1132	100000	100	10	S	AVX
M39014/22-1133	100000	100	20	S	AVX
M39014/22-1134	120000	50	10	S	AVX
M39014/22-1135	150000	50	10	S	AVX
M39014/22-1136	150000	50	20	S	AVX
M39014/22-1137	180000	50	10	S	AVX
M39014/22-1138	220000	50	10	S	AVX
M39014/22-1139	220000	50	20	S	AVX
	Cap	Rated	Cap.	Level 2	
Part Number	Value (pF)	Voltage (V)	Tol. (+/- %)	(FRL)	Manufacturer

CKR24 Ceramic Capacitors

	Cap	Rated	Cap.	Level 2	
Part Number	Value (pF)	Voltage (V)	Tol. (+/- %)	(FRL)	Manufacturer
M39014/22-1140	120000	100	10	S	AVX
M39014/22-1141	150000	100	10	S	AVX
M39014/22-1142	150000	100	20	S	AVX
M39014/22-1143	180000	50	10	S	AVX
M39014/22-1144	220000	50	10	S	AVX
M39014/22-1145	220000	50	20	S	AVX
M39014/22-1146	270000	50	10	S	AVX

M39014/22-1147	330000	50	10	S	AVX
M39014/22-1148	330000	50	20	S	AVX
M39014/22-1149	390000	50	10	S	AVX
M39014/22-1150	470000	50	10	S	AVX
M39014/22-1151	470000	50	20	S	AVX
M39014/22-1152	560000	50	10	S	AVX
M39014/22-1153	680000	50	10	S	AVX
M39014/22-1154	680000	50	20	S	AVX
M39014/22-1155	820000	50	10	S	AVX
M39014/22-1156	1000000	50	10	S	AVX
M39014/22-1157	1000000	50	20	S	AVX
	Cap	Rated	Cap.	Level 2	
Part Number	Value (pF)	Voltage (V)	Tol. (+/- %)	(FRL)	Manufacturer

Axial Lead, Fixed, Ceramic Dielectric, Established Reliability

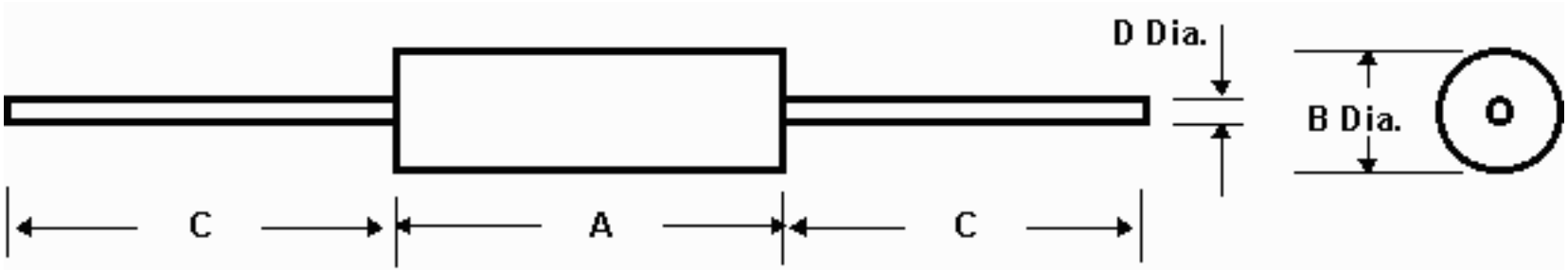

Physical Dimensions Table

All dimensions are in inches

Style	A	B	C	D
CKR11	0.160+/-0.010	0.090+/-0.010	1.250 min.	0.019+/-0.002
CKR12	0.250+/-0.010	0.090+/-0.010	1.250 min.	0.019+/-0.002
CKR14	0.390+/-0.010	0.140+/-0.010	1.250 min.	0.025+/-0.002
CKR15	0.500+/-0.020	0.250+/-0.020	1.250 min.	0.025+/-0.002
CKR16	0.690+/-0.020	0.350+/-0.020	1.250 min.	0.025+/-0.002

Notes:

1) Nonconductive material shall not extend beyond 0.010 inches from end of capacitor body.

2) Lead length may be a minimum of 1.000 inches long for use in tape and reel automatic insertion equipment, when specified in the ordering data.

Dual In-Line Package (DIP), Fixed, Ceramic Dielectric, Established Reliability

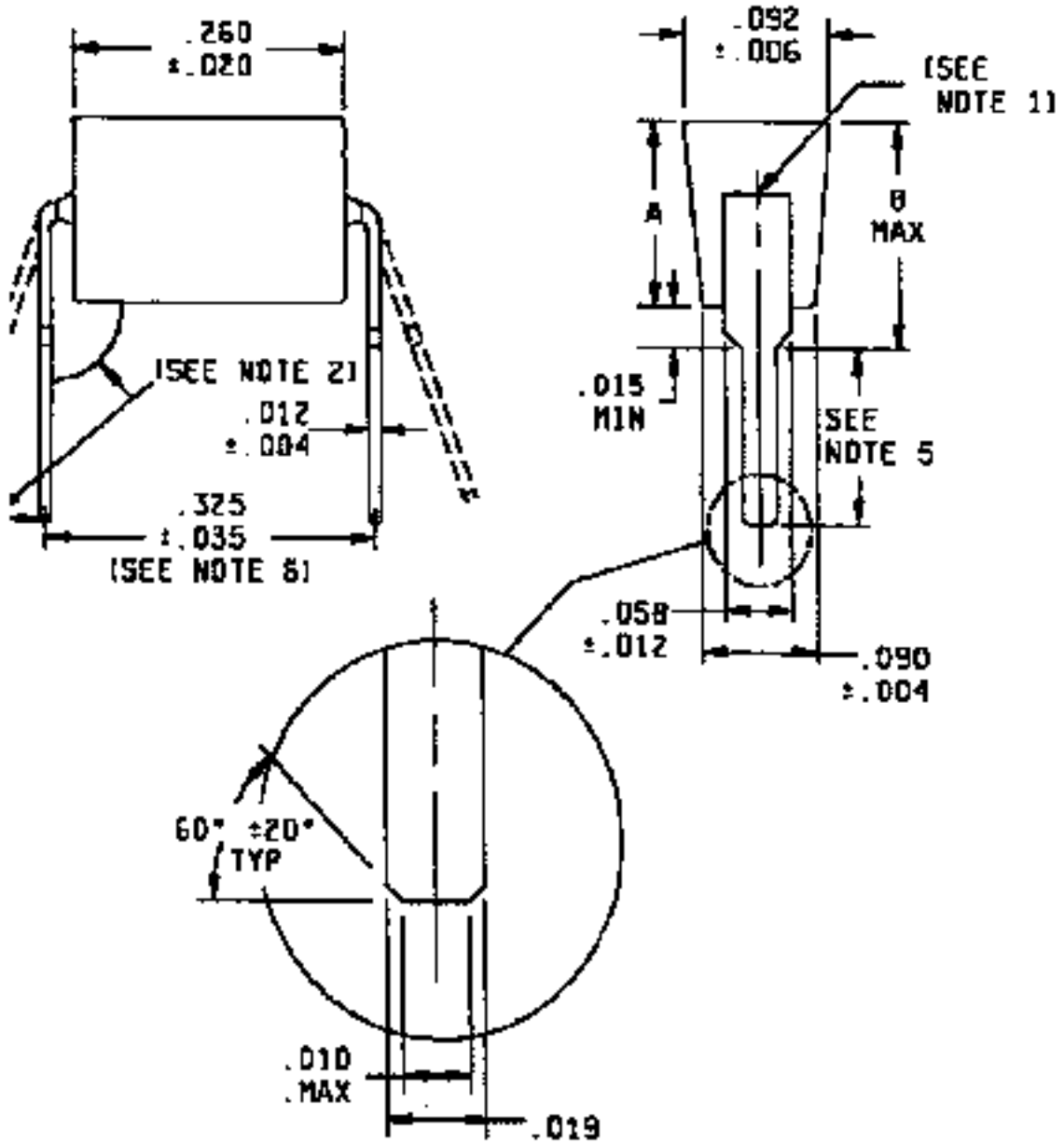

Style	A +/- 0.007	B
CKR22	0.128	0.175
CKR23	0.155	0.195
CKR24	0.283	0.320

NOTES:

1. Leads shall be centered within +/-0.005 inches (0.13 mm).
2. The angle shall be 95deg. +10deg., -5deg..
3. Dimensions are in inches.
4. Metric equivalents are given for general information only.
5. For standard lead length: 0.140 +/-0.020 inch (3.56 +/-0.51 mm); for optional longer lead length: 0.170 +/-0.010 inch (4.32 +/-0.25 mm).
6. The distance between the centers of the mounting holes will be 0.300+/-0.010 inches (7.62+/-0.25 mm).
7. Nonconductive material shall not extend beyond 0.030 inches (0.76 mm) from the edge of the capacitor body.

Radial Lead, Fixed, Ceramic Dielectric, Established Reliability

Style CKR05

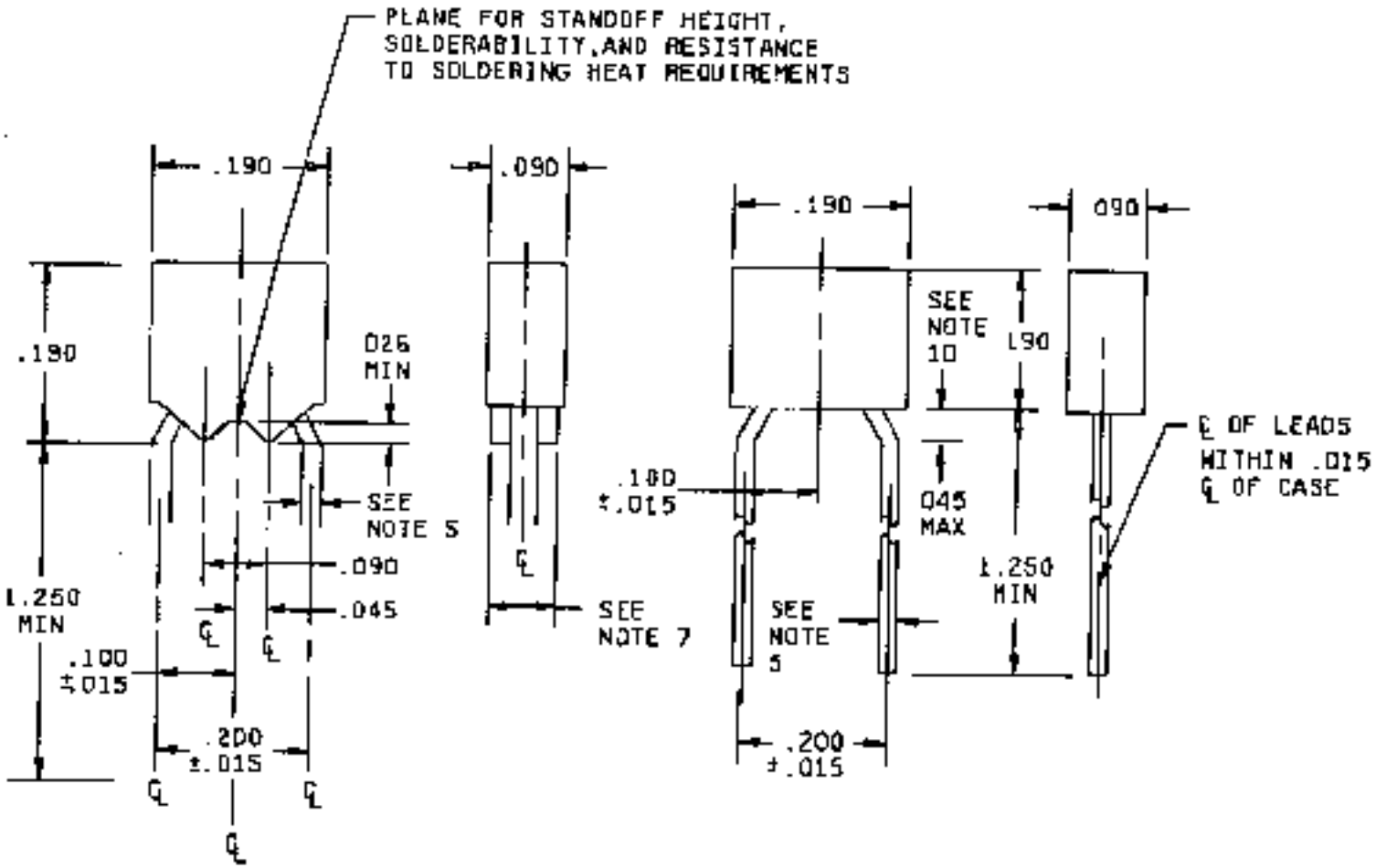

CONFIGURATION WITH STANDOFF

CONFIGURATION WITHOUT STANDOFF

Style CKR06

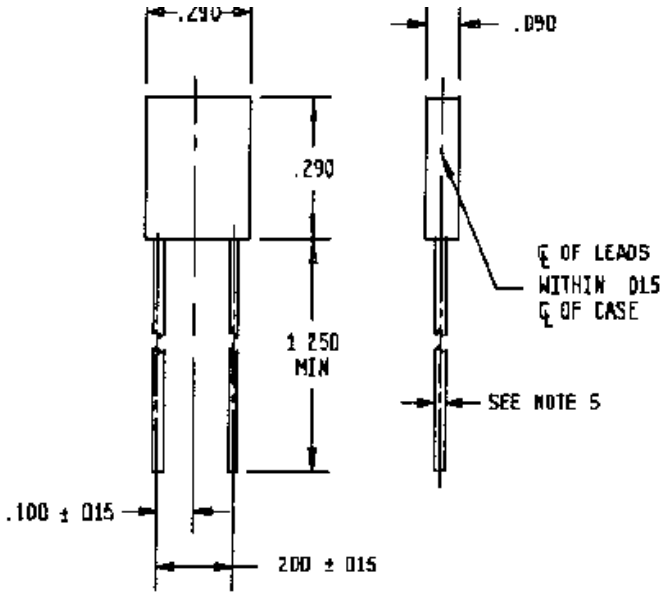

CONFIGURATION WITHOUT STANDOFFS

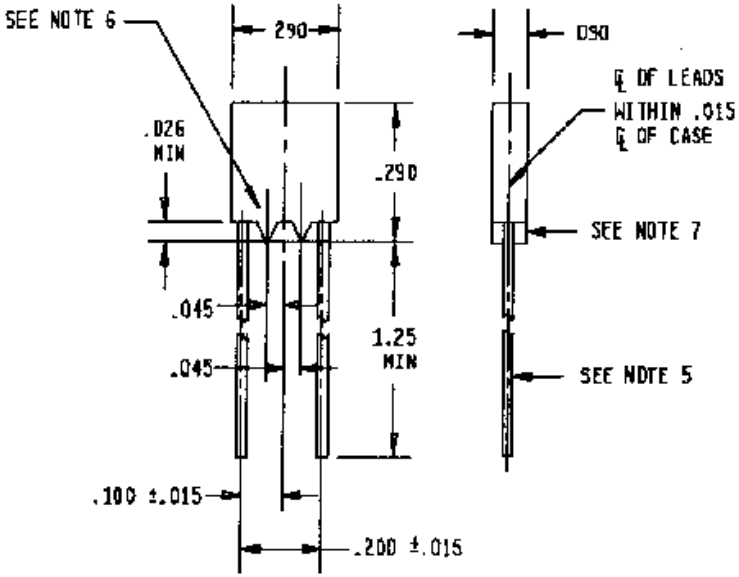

OPTIONAL CONFIGURATION WITH STANDOFFS

Go to -

NEPP

|

NPSL

|

Capacitors

MIL-PRF-49470, CAPACITORS

Fixed, Ceramic Dielectric, Switch Mode Power Supply

PS Styles

Part Number/Ordering Explanation

Important! Application Notes

Revision History for MIL-PRF-49470 Listing in the NPSL

Last Updated: 12/02/02

Click on the links below to see the associated parts selection listing:

Style	Detail Specification	Description (Click Link Below for Dimensional Drawings)	**Currently Available Capacitance Range (Rated Voltage)
PS01 (50V) PS01 (100V) PS01 (200V) PS01 (500V)	MIL-PRF-49470/1	Unencapsulated, Horizontally Stacked	1.0 uF to 270 uF (50 V) 0.68 uF to 180 uF (100 V) 0.47 uF to 12 uF (200 V
PS02 (50V) PS02 (100V) PS02 (200V) PS02 (500V)	MIL-PRF-49470/2	Encapsulated, Horizontally Stacked	1.0 uF to 270 uF (50 V) 0.68 uF to 180 uF (100 V) 0.47 uF to 12 uF (200 V

**Note:

The parts listed above represent currently available styles, capacitance ranges and voltage ratings only. MIL-PRF-49470 specifies additional parts; however, there are no sources available for any parts except those listed herein.

APPLICATION NOTES FOR MIL-{RF-49470

1) When available MIL-PRF-49470 SMPS capacitors are preferred over DSCC-DWG-87106 capacitors. The MIL-PRF-49470 specification was developed as part of a cooperative effort amongst the US Military, NASA and the SMPS suppliers to produce a robust replacement for the DSCC drawing. The MIL spec product provides additional quality assurance provisions which are NOT required by the DSCC drawing. Some of the benefits of the MIL-PRF-49470 product over the DSCC-DWG-87106 product include:

Requirement	MIL-PRF-49470	DSCC-DWG-87106
Formal Qualification Process (QPL Established)	Yes	No
MIL-STD-790 Compliance	Yes	No
DSCC Audits	Yes	No
Routine Qualification Maintenance Testing (ie., Life Testing)	Yes	No
Group A Percent Defective Allowed (PDA) Specified	Yes	No
Prohibits Mixing of Chips from Different Production Lots within a Single SMPS Stack Lot	Yes	No

2) CAUTION! Designers must consider the geometry and relatively high mass of capacitors described by this specification. Devices which are not mounted properly may be susceptible to damage, including lead shearing, in high vibration and shock environments. The taller stacks where the stack height exceeds the minimum base dimension are particularly at risk. Special mounting techniques may be necessary to ensure safe application in these environments. Consult the manufacturer

or parts engineering for recommendations to avoid potential damage from misuse of straps, coefficient of thermal expansion mismatches, etc.

3) Capacitors described by this specification are very susceptible to thermal shock damage due to their large mass of ceramic. Installation temperature profiles should provide adequate temperature rise and cool-down time to prevent damage from thermal shock.

4) Capacitors described by this specification are fragile and should be handled with extreme care. Parts which have been dropped or mishandled should be considered suspect due to the risk of microcracking which may result in latent failures.

5) The "T" Level product is recommended for all Level 1 applications. Per MIL-PRF-49470, "T" level product requires in-process inspections and additional Group A and B screening inspections shown below that are not part of the normal "B" level flow.

"T" Level Requirements in Addition to the Normal "B" Level Requirements
In-Process Screening Non-Destructive Internal Examination (Chip Level) Destructive Physical Analysis (Chip Level)
Group A Destructive Physical Analysis (Finished Stack Level)
Group B Lot Specific Humidity, Steady-State, Low Voltage (Lot Sample Test) Lot Specific Thermal Shock & Life Test (Lot Sample Test)

6) For Level 2 applications at >=10 Vdc, "B" or "T" Level capacitors can be used in accordance with the type, value and failure rate guidelines shown in the tables.

7) For Level 2 low voltage applications (< 10 Vdc), "B" level capacitor rated voltage should be at least 100 Vdc. Alternatively, "B" level parts rated at less than 100 Vdc can be used if flight lots are subjected to lot sample testing per Group B Subgroup 4 of MIL-PRF-49470 (Humidity, Steady-State, Low Voltage). "T" level parts can be used "as-is" because the Humidity, Steady-State, Low Voltage test is required on lot by lot basis. Recommendations for performing this testing are prompted by low voltage failure concerns of multilayer ceramic capacitors.

Revision History for MIL-PRF-49470 Section of the NPSL

12/02/02	Updated Listings to reflect current QPL status (QPL-49470-11 dated Nov. 19, 2002)
04/29/02	Added "T" level parts to the tables as the preferred choice for Level 1 applications. Added application Note 5 to explain the "T" level requirements. Replaced previous Note 5 (low voltage, steady st
12/10/01	Updated PS01 and PS02 listings to reflect updated qualification status of AVX and Presidio per QPL-49470-5. Also added Johanson Dielectrics as a source of supply for some PS01 styles rated at 200 V p
09/02/99	Added Presidio Components qualification status for PS01 500 V caps in BQ characteristic from 0.15 uF up to 5.6uF.
08/02/99	Added Presidio Components qualification status for PS01 100 V caps in BX characteristic up to 8.2 uF. Corrected the AVX listing for PS01 and PS02 100 V caps. Originally, the listing indicated tha
07/07/99	Initial Release of MIL-PRF-49470 Section in the NPSL

Part Number Ordering Information, example and explanation:

M49470P01473KBN where,

M49470	P	01	473	K	B	N
Military Specification Number	Characteristic	Slash Sheet Number	Capacitance	Capacitance Tolerance	Rated Voltage	Lead Configuration

Military Specification Number	Reliability Level
M49470	Standard Reliability (also known as "B" Level)

T49470	High Reliability (also known as "T" Level)

	Capacitance Change with Reference to 25deg.C	Capacitance Change with Reference to 25deg.C
Characteristic Symbol	No Voltage Applied	Rated Voltage Applied
P	0 ppm/deg.C +/- 30 ppm/deg.C	0 ppm/deg.C +/- 30 ppm/deg.C
Q	+/- 15%	+ 15%, -50%
R	+/- 15%	+ 15%, -40%
X	+/- 15%	+ 15%, -25%

Detail Specification	Style	Description
MIL-PRF-49470/1	PS01	Unencapsulated, Horizontally Stacked
MIL-PRF-49470/2	PS02	Encapsulated, Horizontally Stacked
**MIL-PRF-49470/3	PS03	Conformally Coated, Horizontally Stacked
**MIL-PRF-49470/4	PS04	Unencapsulated, Vertically Stacked
**MIL-PRF-49470/5	PS05	Encapsulated, Vertically Stacked
**MIL-PRF-49470/6	PS06	Conformally Coated, Vertically Stacked

** No qualified sources available

Capacitor Values:

The nominal capacitance value, expressed in picofarads (pF) is identified by a three digit number; the first two digits represent significant figures and the last digit specifies the number of zeroes to follow. For example 104 indicates 100,000 pF and 475 indicates 4,700,000 pF.

Capacitance Tolerance Symbol	Capacitance Tolerance		Rated Voltage Symbol	Rated Voltage
J	+/- 5%		A	50
K	+/- 10%		B	100
M	+/- 20%		C	200
			E	500

Lead Configuration	Lead Style	Height Profile (Dimension A)	Formed Lead Length, L (inches)
N	Normal, Straight	Standard	N/A
L	"L" (90deg. bend away from center of part)	Standard	0.070 +/- 0.010
M	"L" (90deg. bend away from center of part)	Standard	0.045 +/- 0.010
J	"J" (90deg. bend toward center of part)	Standard	0.070 +/- 0.010
K	"J" (90deg. bend toward center of part)	Standard	0.045 +/- 0.010
A	Normal, Straight	Low	N/A
B	"L" (90deg. bend away from center of part)	Low	0.070 +/- 0.010
D	"L" (90deg. bend away from center of part)	Low	0.045 +/- 0.010
C	"J" (90deg. bend toward center of part)	Low	0.070 +/- 0.010

F	"J" (90deg. bend toward center of part)	Low	0.045 +/- 0.010

MIL-PRF-49470, CAPACITORS

Fixed, Ceramic Dielectric, Switch Mode Power Supply

Physical Dimensions Table

Case Code	A (Max) See Note 4	B (Max) See Note 4	C +/-0.025	D (Min)	D (Max)	E (Max)	Number of Pins per Side
1	0.650	0.715	0.450	1.950	2.075	0.500	20
2	0.650	0.715	0.800	1.450	1.535	0.870	15
3	0.650	0.715	0.450	0.950	1.075	0.500	10
4	0.650	0.715	0.400	0.350	0.425	0.440	4
5	0.650	0.715	0.250	0.224	0.275	0.300	3
6	0.650	0.715	1.250	1.950	2.075	1.350	20

Notes:

1) Dimensions are in inches.

2) Metric equivalents are given for general information only.

3) Unless otherwise specified, tolerances are +/-0.010 inches.

4) Lead frame configuration is shown as typical above the seating plane.

5) See the part selection list table for maximum A dimension. For maximum B dimension, add 0.065 inch to the appropriate A dimension. For all lead styles, the number of chips is determined by the capacitance and voltage rating.

6) For case code 5, dimensions shall be 0.100 inches maximum, 0.012 inches minimum.

7) Lead alignment within pin rows shall be within +/-0.005 inches.

MIL-PRF-49470/1 Ceramic Switch Mode Power Supply (SMPS) Capacitors

Part Number	Capacitance (uF)	Rated Volt (V)	Cap. Tol. (%)	Temp. Char.	Case Code	Lead Style (#)	Max. "A" Dimension	Level	Manufacturer
M49470P01563%A#	0.056	50	J,K	BP	5	J,L,N	0.120	3	N/A
M49470P01683%A#	0.068	50	J,K	BP	5	J,L,N	0.240	3	N/A
M49470P01823%A#	0.082	50	J,K	BP	5	J,L,N	0.240	3	N/A
M49470P01104%A#	0.1	50	J,K	BP	5	J,L,N	0.240	3	N/A
M49470P01124%A#	0.12	50	J,K	BP	5	J,L,N	0.360	3	N/A
M49470P01154%A#	0.15	50	J,K	BP	5	J,L,N	0.360	3	N/A
M49470P01184%A#	0.180	50	J,K	BP	5	J,L,N	0.480	3	N/A
M49470P01224%A#	0.220	50	J,K	BP	5	J,L,N	0.480	3	N/A
M49470P01274%A#	0.270	50	J,K	BP	5	J,L,N	0.650	3	N/A
M49470P01334%A#	0.330	50	J,K	BP	4	J,L,N	0.360	3	N/A
M49470P01394%A#	0.390	50	J,K	BP	4	J,L,N	0.480	3	N/A
M49470P01474%A#	0.470	50	J,K	BP	4	J,L,N	0.480	3	N/A
M49470P01564%A#	0.560	50	J,K	BP	4	J,L,N	0.650	3	N/A
M49470P01684%A#	0.680	50	J,K	BP	3	J,L,N	0.240	3	N/A
M49470P01824%A#	0.820	50	J,K	BP	3	J,L,N	0.240	3	N/A
M49470P01105%A#	1.0	50	J,K	BP	3	J,L,N	0.360	3	N/A
M49470X01105%A#	1.0	50	K,M	BX	5	J,L,N	0.120	3	N/A

M49470P01125%A#	1.2	50	J,K	BP	3	J,L,N	0.360	3	N/A
M49470X01125%A#	1.2	50	K,M	BX	5	J,L,N	0.120	3	N/A
M49470P01155%A#	1.5	50	J,K	BP	3	J,L,N	0.480	3	N/A
M49470X01155%A#	1.5	50	K,M	BX	5	J,L,N	0.240	3	N/A
M49470P01185%A#	1.8	50	J,K	BP	3	J,L,N	0.480	3	N/A
M49470X01185%A#	1.8	50	K,M	BX	5	J,L,N	0.240	3	N/A
M49470P01225%A#	2.2	50	J,K	BP	3	J,L,N	0.650	3	N/A
M49470X01225%A#	2.2	50	K,M	BX	5	J,L,N	0.240	3	N/A
M49470P01275%A#	2.7	50	J,K	BP	1	J,L,N	0.360	3	N/A
M49470X01275%A#	2.7	50	K,M	BX	5	J,L,N	0.360	3	N/A
M49470P01335%A#	3.3	50	J,K	BP	1	J,L,N	0.480	3	N/A
M49470X01335%A#	3.3	50	K,M	BX	5	J,L,N	0.360	3	N/A
M49470P01395%A#	3.9	50	J,M	BP	1	J,L,N	0.480	3	N/A
M49470X01395%A#	3.9	50	K,M	BX	5	J,L,N	0.480	3	N/A
M49470P01475%A#	4.7	50	J,M	BP	1	J,L,N	0.650	3	N/A
M49470X01475%A#	4.7	50	K,M	BX	5	J,L,N	0.480	3	N/A
M49470P01565%A#	5.6	50	J,K	BP	2	J,L,N	0.650	3	N/A
M49470X01565%A#	5.6	50	K,M	BX	5	J,L,N	0.650	3	N/A
M49470P01685%A#	6.8	50	J,K	BP	6	J,L,N	0.360	3	N/A
M49470X01685%A#	6.8	50	K,M	BX	4	J,L,N	0.360	3	N/A
M49470P01825%A#	8.2	50	J,K	BP	6	J,L,N	0.360	3	N/A
M49470X01825%A#	8.2	50	K,M	BX	4	J,L,N	0.360	3	N/A
M49470P01106%A#	10	50	J,K	BP	6	J,L,N	0.480	3	N/A
M49470P01473%A#	0.047	100	J,K	BP	5	J,L,N	0.120	3	AVX
M49470P01563%A#	0.056	100	J,K	BP	5	J,L,N	0.120	3	AVX
M49470P01683%A#	0.068	100	J,K	BP	5	J,L,N	0.240	3	AVX
M49470P01823%A#	0.082	100	J,K	BP	5	J,L,N	0.240	3	AVX
M49470P01104%A#	0.1	100	J,K	BP	5	J,L,N	0.240	3	AVX
M49470P01124%A#	0.12	100	J,K	BP	5	J,L,N	0.360	3	AVX
M49470P01154%A#	0.15	100	J,K	BP	5	J,L,N	0.360	3	AVX
M49470P01184%A#	0.180	100	J,K	BP	5	J,L,N	0.480	3	AVX
M49470P01224%A#	0.220	100	J,K	BP	5	J,L,N	0.480	3	AVX
M49470P01274%A#	0.270	100	J,K	BP	5	J,L,N	0.650	3	AVX
M49470P01334%A#	0.330	100	J,K	BP	4	J,L,N	0.360	3	AVX
M49470P01394%A#	0.390	100	J,K	BP	4	J,L,N	0.480	3	AVX
M49470P01474%A#	0.470	100	J,K	BP	4	J,L,N	0.480	3	AVX
M49470P01564%A#	0.560	100	J,K	BP	4	J,L,N	0.650	3	AVX
M49470P01684%A#	0.680	100	J,K	BP	3	J,L,N	0.240	3	AVX
M49470P01824%A#	0.820	100	J,K	BP	3	J,L,N	0.240	3	AVX
M49470P01105%A#	1.0	100	J,K	BP	3	J,L,N	0.360	3	AVX
M49470X01105%A#	1.0	100	K,M	BX	5	J,L,N	0.120	3	AVX
M49470P01125%A#	1.2	100	J,K	BP	3	J,L,N	0.360	3	AVX
M49470X01125%A#	1.2	100	K,M	BX	5	J,L,N	0.120	3	AVX
M49470P01155%A#	1.5	100	J,K	BP	3	J,L,N	0.480	3	AVX
M49470X01155%A#	1.5	100	K,M	BX	5	J,L,N	0.240	3	AVX
M49470P01185%A#	1.8	100	J,K	BP	3	J,L,N	0.480	3	AVX
M49470X01185%A#	1.8	100	K,M	BX	5	J,L,N	0.240	3	AVX

M49470P01225%A#	2.2	100	J,K	BP	3	J,L,N	0.650	3	AVX
M49470X01225%A#	2.2	100	K,M	BX	5	J,L,N	0.240	3	AVX
M49470P01275%A#	2.7	100	J,K	BP	1	J,L,N	0.360	3	AVX
M49470X01275%A#	2.7	100	K,M	BX	5	J,L,N	0.360	3	AVX
M49470P01335%A#	3.3	100	J,K	BP	1	J,L,N	0.480	3	AVX
M49470X01335%A#	3.3	100	K,M	BX	5	J,L,N	0.360	3	AVX
M49470P01395%A#	3.9	100	J,M	BP	1	J,L,N	0.480	3	AVX
M49470X01395%A#	3.9	100	K,M	BX	5	J,L,N	0.480	3	AVX
M49470P01475%A#	4.7	100	J,M	BP	1	J,L,N	0.650	3	AVX
M49470X01475%A#	4.7	100	K,M	BX	5	J,L,N	0.480	3	AVX
M49470P01565%A#	5.6	100	J,K	BP	2	J,L,N	0.650	3	AVX
M49470X01565%A#	5.6	100	K,M	BX	5	J,L,N	0.650	3	AVX
M49470P01685%A#	6.8	100	J,K	BP	6	J,L,N	0.360	3	AVX
M49470X01685%A#	6.8	100	K,M	BX	4	J,L,N	0.360	3	AVX
M49470P01825%A#	8.2	100	J,K	BP	6	J,L,N	0.360	3	AVX
M49470X01825%A#	8.2	100	K,M	BX	4	J,L,N	0.360	3	AVX
M49470P01106%A#	10	100	J,K	BP	6	J,L,N	0.480	3	AVX
M49470X01106%A#	10	100	K,M	BX	4	J,L,N	0.480	3	AVX
M49470P01126%A#	12	100	J,K	BP	6	J,L,N	0.480	3	AVX
M49470X01126%A#	12	100	K,M	BX	4	J,L,N	0.480	3	AVX
M49470P01156%A#	15	100	J,K	BP	6	J,L,N	0.650	3	AVX
M49470X01156%A#	15	100	K,M	BX	4	J,L,N	0.650	3	AVX
M49470X01186%A#	18	100	K,M	BX	3	J,L,N	0.240	3	AVX
M49470X01226%A#	22	100	K,M	BX	3	J,L,N	0.360	3	AVX
M49470X01276%A#	27	100	K,M	BX	3	J,L,N	0.360	3	AVX
M49470X01336%A#	33	100	K,M	BX	3	J,L,N	0.360	3	AVX
M49470X01396%A#	39	100	K,M	BX	3	J,L,N	0.480	3	AVX
M49470X01476%A#	47	100	K,M	BX	3	J,L,N	0.650	3	AVX
M49470X01566%A#	56	100	K,M	BX	1	J,L,N	0.360	3	AVX
M49470X01686%A#	68	100	K,M	BX	1	J,L,N	0.480	3	AVX
M49470X01826%A#	82	100	K,M	BX	1	J,L,N	0.480	3	AVX
M49470X01107%A#	100	100	K,M	BX	1	J,L,N	0.650	3	AVX
M49470X01127%A#	120	100	K,M	BX	2	J,L,N	0.480	3	AVX
M49470X01157%A#	150	100	K,M	BX	2	J,L,N	0.650	3	AVX
M49470X01187%A#	180	100	K,M	BX	6	J,L,N	0.480	3	AVX
M49470X01227%A#	220	100	K,M	BX	6	J,L,N	0.480	3	AVX
M49470X01277%A#	270	100	K,M	BX	6	J,L,N	0.650	3	AVX
M49470P01473%B#	0.047	200	J,K	BP	5	J,L,N	0.240	3	N/A
M49470P01563%B#	0.056	200	J,K	BP	5	J,L,N	0.240	3	N/A
M49470P01683%B#	0.068	200	J,K	BP	5	J,L,N	0.240	3	N/A
M49470P01823%B#	0.082	200	J,K	BP	5	J,L,N	0.240	3	N/A
M49470P01104%B#	0.1	200	J,K	BP	5	J,L,N	0.360	3	N/A
M49470P01124%B#	0.12	200	J,K	BP	5	J,L,N	0.360	3	N/A
M49470P01154%B#	0.15	200	J,K	BP	5	J,L,N	0.480	3	N/A
M49470P01184%B#	0.18	200	J,K	BP	5	J,L,N	0.650	3	N/A
M49470P01224%B#	0.22	200	J,K	BP	5	J,L,N	0.650	3	N/A
M49470P01274%B#	0.27	200	J,K	BP	4	J,L,N	0.360	3	N/A

M49470P01334%B#	0.33	200	J,K	BP	4	J,L,N	0.480	3	N/A
M49470P01394%B#	0.39	200	J,K	BP	4	J,L,N	0.480	3	N/A
M49470P01474%B#	0.47	200	J,K	BP	4	J,L,N	0.650	3	N/A
M49470P01564%B#	0.56	200	J,K	BP	4	J,L,N	0.650	3	N/A
M49470P01684%B#	0.68	200	J,K	BP	3	J,L,N	0.240	3	N/A
M49470X01684%B#	0.68	200	K,M	BX	5	J,L,N	0.120	3	N/A
M49470P01824%B#	0.82	200	J,K	BP	3	J,L,N	0.120	3	N/A
M49470X01824%B#	0.82	200	K,M	BX	5	J,L,N	0.240	3	N/A
M49470P01105%B#	1	200	J,K	BP	3	J,L,N	0.360	3	N/A
M49470X01105%B#	1	200	K,M	BX	5	J,L,N	0.240	3	N/A
M49470P01125%B#	1.2	200	J,K	BP	3	J,L,N	0.480	3	N/A
M49470X01125%B#	1.2	200	K,M	BX	5	J,L,N	0.240	3	N/A
M49470P01155%B#	1.5	200	J,K	BP	3	J,L,N	0.480	3	N/A
M49470X01155%B#	1.5	200	K,M	BX	5	J,L,N	0.360	3	N/A
M49470P01185%B#	1.8	200	J,K	BP	3	J,L,N	0.650	3	N/A
M49470X01185%B#	1.8	200	K,M	BX	5	J,L,N	0.360	3	N/A
M49470P01225%B#	2.2	200	J,K	BP	1	J,L,N	0.480	3	N/A
M49470X01225%B#	2.2	200	K,M	BX	5	J,L,N	0.480	3	N/A
M49470P01275%B#	2.7	200	J,K	BP	1	J,L,N	0.480	3	N/A
M49470X01275%B#	2.7	200	K,M	BX	5	J,L,N	0.480	3	N/A
M49470P01335%B#	3.3	200	J,K	BP	1	J,L,N	0.650	3	N/A
M49470X01335%B#	3.3	200	K,M	BX	5	J,L,N	0.650	3	N/A
M49470P01395%B#	3.9	200	J,K	BP	2	J,L,N	0.480	3	N/A
M49470X01395%B#	3.9	200	K,M	BX	4	J,L,N	0.360	3	N/A
M49470P01475%B#	4.7	200	J,K	BP	2	J,L,N	0.650	3	N/A
M49470X01475%B#	4.7	200	K,M	BX	4	J,L,N	0.360	3	N/A
M49470P01565%B#	5.6	200	J,K	BP	6	J,L,N	0.360	3	N/A
M49470X01565%B#	5.6	200	K,M	BX	4	J,L,N	0.480	3	N/A
M49470P01685%B#	6.8	200	J,K	BP	6	J,L,N	0.360	3	N/A
M49470X01685%B#	6.8	200	K,M	BX	4	J,L,N	0.480	3	N/A
M49470P01825%B#	8.2	200	J,K	BP	6	J,L,N	0.480	3	N/A
M49470X01825%B#	8.2	200	K,M	BX	4	J,L,N	0.650	3	N/A
M49470P01106%B#	10	200	J,K	BP	6	J,L,N	0.650	3	N/A
M49470X01106%B#	10	200	K,M	BX	3	J,L,N	0.240	3	N/A
M49470P01126%B#	12	200	J,K	BP	6	J,L,N	0.650	3	N/A
M49470X01126%B#	12	200	K,M	BX	3	J,L,N	0.240	3	N/A
M49470X01156%B#	15	200	K,M	BX	3	J,L,N	0.360	3	N/A
M49470X01186%B#	18	200	K,M	BX	3	J,L,N	0.360	3	N/A
M49470X01226%B#	22	200	K,M	BX	3	J,L,N	0.480	3	N/A
M49470X01276%B#	27	200	K,M	BX	3	J,L,N	0.650	3	N/A
M49470X01336%B#	33	200	K,M	BX	1	J,L,N	0.360	3	N/A
M49470X01396%B#	39	200	K,M	BX	1	J,L,N	0.480	3	N/A
M49470X01476%B#	47	200	K,M	BX	1	J,L,N	0.480	3	N/A
M49470X01566%B#	56	200	K,M	BX	1	J,L,N	0.650	3	N/A
M49470X01686%B#	68	200	K,M	BX	2	J,L,N	0.480	3	N/A
M49470X01826%B#	82	200	K,M	BX	2	J,L,N	0.650	3	N/A
M49470X01107%B#	100	200	K,M	BX	6	J,L,N	0.360	3	N/A

M49470X01127%B#	120	200	K,M	BX	6	J,L,N	0.360	3	N/A
M49470X01157%B#	150	200	K,M	BX	6	J,L,N	0.480	3	N/A
M49470X01187%B#	180	200	K,M	BX	6	J,L,N	0.650	3	N/A
M49470P01223%C#	0.022	500	J,K	BP	5	J,L,N	0.120	3	N/A
M49470P01273%C#	0.027	500	J,K	BP	5	J,L,N	0.240	3	N/A
M49470P01333%C#	0.033	500	J,K	BP	5	J,L,N	0.240	3	N/A
M49470P01393%C#	0.039	500	J,K	BP	5	J,L,N	0.240	3	N/A
M49470P01473%C#	0.047	500	J,K	BP	5	J,L,N	0.360	3	N/A
M49470P01563%C#	0.056	500	J,K	BP	5	J,L,N	0.360	3	N/A
M49470P01683%C#	0.068	500	J,K	BP	5	J,L,N	0.480	3	N/A
M49470P01823%C#	0.082	500	J,K	BP	5	J,L,N	0.480	3	N/A
M49470P01104%C#	0.1	500	J,K	BP	5	J,L,N	0.650	3	N/A
M49470P01124%C#	0.12	500	J,K	BP	4	J,L,N	0.360	3	N/A
M49470P01154%C#	0.15	500	J,K	BP	4	J,L,N	0.360	3	N/A
M49470P01184%C#	0.18	500	J,K	BP	4	J,L,N	0.480	3	N/A
M49470P01224%C#	0.22	500	J,K	BP	4	J,L,N	0.480	3	N/A
M49470P01274%C#	0.27	500	J,K	BP	4	J,L,N	0.650	3	N/A
M49470P01334%C#	0.33	500	J,K	BP	3	J,L,N	0.240	3	N/A
M49470P01394%C#	0.39	500	J,K	BP	3	J,L,N	0.240	3	N/A
M49470P01474%C#	0.47	500	J,K	BP	3	J,L,N	0.360	3	N/A
M49470R01474%C#	0.47	500	K,M	BR	5	J,L,N	0.240	3	N/A
M49470P01564%C#	0.56	500	J,K	BP	3	J,L,N	0.360	3	N/A
M49470R01564%C#	0.56	500	K,M	BR	5	J,L,N	0.240	3	N/A
M49470P01684%C#	0.68	500	J,K	BP	3	J,L,N	0.480	3	N/A
M49470R01684%C#	0.68	500	K,M	BR	5	J,L,N	0.360	3	N/A
M49470P01824%C#	0.82	500	J,K	BP	3	J,L,N	0.650	3	N/A
M49470R01824%C#	0.82	500	K,M	BR	5	J,L,N	0.360	3	N/A
M49470P01105%C#	1	500	J,K	BP	3	J,L,N	0.650	3	N/A
M49470R01105%C#	1	500	K,M	BR	5	J,L,N	0.480	3	N/A
M49470P01125%C#	1.2	500	J,K	BP	1	J,L,N	0.480	3	N/A
M49470R01125%C#	1.2	500	K,M	BR	5	J,L,N	0.480	3	N/A
M49470P01155%C#	1.5	500	J,K	BP	1	J,L,N	0.480	3	N/A
M49470R01155%C#	1.5	500	K,M	BR	5	J,L,N	0.650	3	N/A
M49470P01185%C#	1.8	500	J,K	BP	1	J,L,N	0.650	3	N/A
M49470R01185%C#	1.8	500	K,M	BR	4	J,L,N	0.360	3	N/A
M49470P01225%C#	2.2	500	J,K	BP	2	J,L,N	0.480	3	N/A
M49470R01225%C#	2.2	500	K,M	BR	4	J,L,N	0.360	3	N/A
M49470P01275%C#	2.7	500	J,K	BP	2	J,L,N	0.650	3	N/A
M49470R01275%C#	2.7	500	K,M	BR	4	J,L,N	0.480	3	N/A
M49470P01335%C#	3.3	500	J,K	BP	6	J,L,N	0.360	3	N/A
M49470R01335%C#	3.3	500	K,M	BR	4	J,L,N	0.480	3	N/A
M49470P01395%C#	3.9	500	J,K	BP	6	J,L,N	0.360	3	N/A
M49470R01395%C#	3.9	500	K,M	BR	4	J,L,N	0.650	3	N/A
M49470Q01224%E#	0.22	500	K,M	BQ	5	J,L,N	0.240	3	N/A
M49470P01274%E#	0.27	500	J,K	BP	3	J,L,N	0.360	3	N/A
M49470Q01274%E#	0.27	500	K,M	BQ	5	J,L,N	0.240	3	N/A
M49470P01334%E#	0.33	500	J,K	BP	3	J,L,N	0.480	3	N/A

M49470Q01334%E#	0.33	500	K,M	BQ	5	J,L,N	0.360	3	N/A
M49470P01394%E#	0.39	500	J,K	BP	3	J,L,N	0.650	3	N/A
M49470Q01394%E#	0.39	500	K,M	BQ	5	J,L,N	0.360	3	N/A
M49470P01474%E#	0.47	500	J,K	BP	1	J,L,N	0.360	3	N/A
M49470Q01474%E#	0.47	500	K,M	BQ	5	J,L,N	0.360	3	N/A
M49470P01564%E#	0.56	500	J,K	BP	1	J,L,N	0.480	3	N/A
M49470Q01564%E#	0.56	500	K,M	BQ	5	J,L,N	0.480	3	N/A
M49470P01684%E#	0.68	500	J,K	BP	1	J,L,N	0.480	3	N/A
M49470Q01684%E#	0.68	500	K,M	BQ	5	J,L,N	0.650	3	N/A
M49470P01824%E#	0.82	500	J,K	BP	1	J,L,N	0.650	3	N/A
M49470Q01824%E#	0.82	500	K,M	BQ	4	J,L,N	0.360	3	N/A
M49470P01105%E#	1	500	J,K	BP	2	J,L,N	0.480	3	N/A
M49470Q01105%E#	1	500	K,M	BQ	4	J,L,N	0.360	3	N/A
M49470P01125%E#	1.2	500	J,K	BP	2	J,L,N	0.650	3	N/A
M49470Q01125%E#	1.2	500	K,M	BQ	4	J,L,N	0.360	3	N/A
M49470P01155%E#	1.5	500	J,K	BP	6	J,L,N	0.360	3	N/A
M49470Q01155%E#	1.5	500	K,M	BQ	4	J,L,N	0.480	3	N/A
M49470P01185%E#	1.8	500	J,K	BP	6	J,L,N	0.480	3	N/A
M49470Q01185%E#	1.8	500	K,M	BQ	4	J,L,N	0.650	3	N/A
M49470P01225%E#	2.2	500	J,K	BP	6	J,L,N	0.650	3	N/A
M49470Q01225%E#	2.2	500	K,M	BQ	3	J,L,N	0.240	3	N/A
M49470Q01275%E#	2.7	500	K,M	BQ	3	J,L,N	0.360	3	N/A
M49470Q01335%E#	3.3	500	K,M	BQ	3	J,L,N	0.360	3	N/A
M49470Q01395%E#	3.9	500	K,M	BQ	3	J,L,N	0.360	3	N/A
M49470Q01475%E#	4.7	500	K,M	BQ	3	J,L,N	0.480	3	N/A
M49470Q01565%E#	5.6	500	K,M	BQ	3	J,L,N	0.650	3	N/A
M49470Q01685%E#	6.8	500	K,M	BQ	1	J,L,N	0.480	3	N/A
M49470Q01825%E#	8.2	500	K,M	BQ	1	J,L,N	0.480	3	N/A
M49470Q01106%E#	10	500	K,M	BQ	1	J,L,N	0.480	3	N/A
M49470Q01126%E#	12	500	K,M	BQ	1	J,L,N	0.650	3	N/A
M49470Q01156%E#	15	500	K,M	BQ	2	J,L,N	0.650	3	N/A
M49470Q01186%E#	18	500	K,M	BQ	2	J,L,N	0.650	3	N/A
M49470Q01226%E#	22	500	K,M	BQ	6	J,L,N	0.360	3	N/A
M49470Q01276%E#	27	500	K,M	BQ	6	J,L,N	0.360	3	N/A
M49470Q01336%E#	33	500	K,M	BQ	6	J,L,N	0.480	3	N/A
M49470Q01396%E#	39	500	K,M	BQ	6	J,L,N	0.650	3	N/A

MIL-PRF-49470/1 (PS01 Style), CAPACITORS

Fixed, Ceramic Dielectric, Switch Mode Power Supply

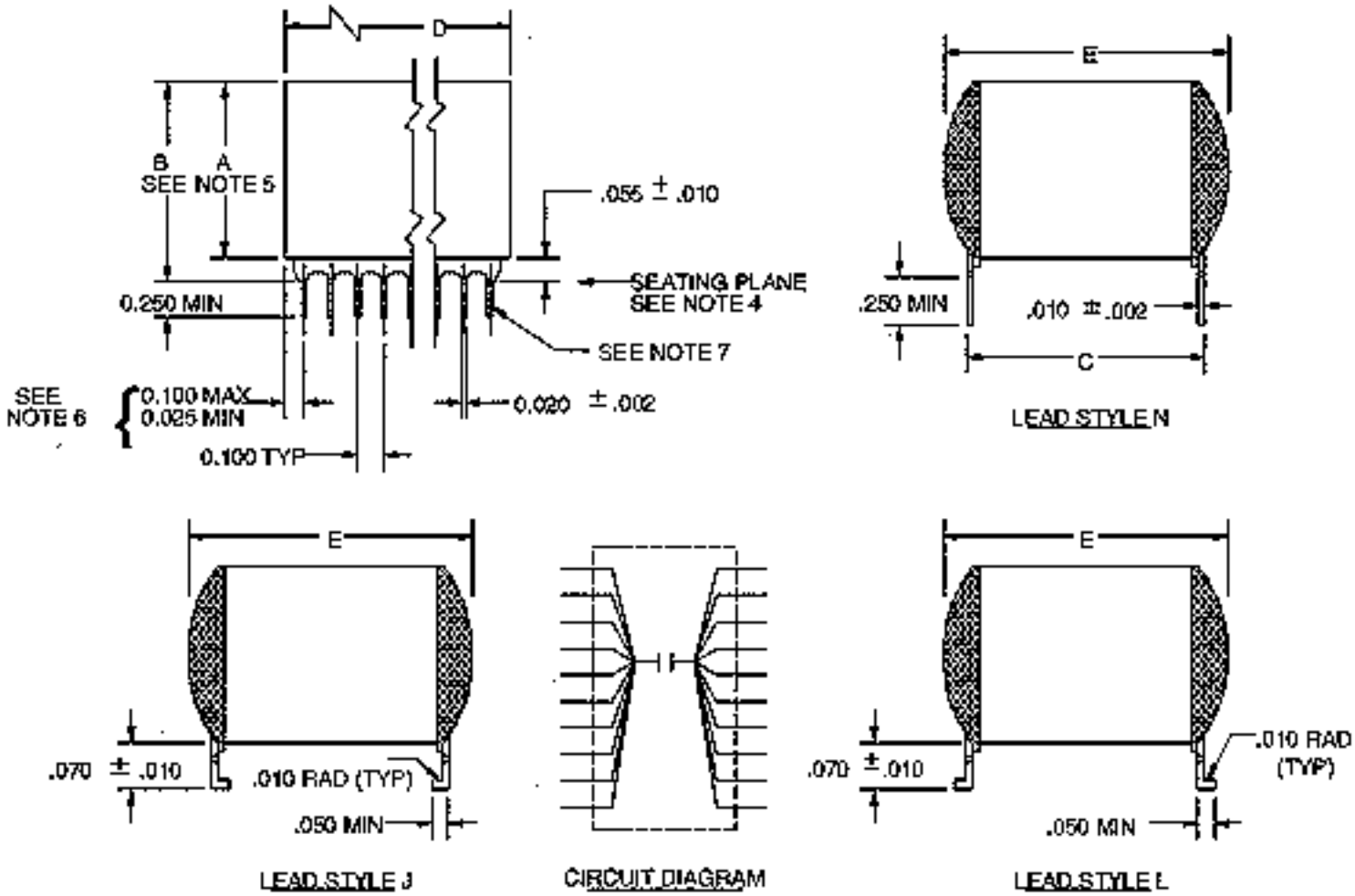

Physical Dimensions Table

Case Code	C +/- 0.025	D (Min)	D (Max)	E (Max)	Number of Pins per Side
1	0.450	1.950	2.075	0.500	20
2	0.800	1.450	1.535	0.870	15
3	0.450	0.950	1.075	0.500	10

4	0.400	0.350	0.425	0.440	4
5	0.250	0.224	0.275	0.300	3
6	1.250	1.950	2.075	1.350	20

Notes:

1) Dimensions are in inches.

2) Metric equivalents are given for general information only.

3) Unless otherwise specified, tolerances are +/-0.010 inches.

4) Lead frame configuration is shown as typical above the seating plane.

5) See the part list table for specific maximum A dimension. For maximum B dimension, add 0.065 inches to the appropriate A dimension. For all lead styles, the number of chips is determined by the capacitance and voltage rating.

6) For case code 5, dimensions shall be 0.100 inches maximum, 0.012 inches minimum.

7) Lead alignment within pin rows shall be within +/-0.005 inches.

MIL-PRF-49470/1 Ceramic Switch Mode Power Supply (SMPS) Capacitors, 50 V Rated

Part Number	Capacitance (uF)	Rated Volt (V)	Cap. Tol. (%)	Temp. Char.	Case Code	Lead Style (#)	Max. "A" Dimension	Level 1 (*)	Level 2 (*)	Manufacturer
*49470X01105%A#	1.0	50	K,M	BX	5	N,L,M,J,K	0.120	T	M	AVX1,PRE
*49470 X01125%A#	1.2	50	K,M	BX	5	N,L,M,J,K	0.120	T	M	AVX1,PRE
*49470 X01155%A#	1.5	50	K,M	BX	5	N,L,M,J,K	0.240	T	M	AVX1,PRE
*49470 X01185%A#	1.8	50	K,M	BX	5	N,L,M,J,K	0.240	T	M	AVX1,PRE
*49470 X01225%A#	2.2	50	K,M	BX	5	N,L,M,J,K	0.240	T	M	AVX1,PRE
*49470 X01275%A#	2.7	50	K,M	BX	5	N,L,M,J,K	0.360	T	M	AVX1,PRE
*49470 X01335%A#	3.3	50	K,M	BX	5	N,L,M,J,K	0.360	T	M	AVX1,PRE
*49470 X01395%A#	3.9	50	K,M	BX	5	N,L,M,J,K	0.480	T	M	AVX1,PRE
*49470 X01475%A#	4.7	50	K,M	BX	5	N,L,M,J,K	0.480	T	M	AVX1,PRE
*49470 X01475%A#	4.7	50	K,M	BX	4	A,B,C,D,F	0.240	T	M	AVX1,PRE
*49470 X01565%A#	5.6	50	K,M	BX	5	N,L,M,J,K	0.650	T	M	AVX1,PRE
*49470 X01565%A#	5.6	50	K,M	BX	4	A,B,C,D,F	0.240	T	M	AVX1,PRE
*49470 X01685%A#	6.8	50	K,M	BX	4	N,L,M,J,K	0.360	T	M	AVX1,PRE
*49470 X01825%A#	8.2	50	K,M	BX	4	N,L,M,J,K	0.360	T	M	AVX1,PRE
*49470 X01106%A#	10	50	K,M	BX	4	N,L,M,J,K	0.480	T	M	AVX1,PRE
*49470 X01126%A#	12	50	K,M	BX	4	N,L,M,J,K	0.480	T	M	AVX1,PRE
*49470 X01156%A#	15	50	K,M	BX	4	N,L,M,J,K	0.650	T	M	AVX1,PRE
*49470 X01156%A#	15	50	K,M	BX	3	A,B,C,D,F	0.240	T	M	AVX1,PRE
*49470 X01186%A#	18	50	K,M	BX	3	N,L,M,J,K	0.240	T	M	AVX1,PRE
*49470 X01226%A#	22	50	K,M	BX	3	N,L,M,J,K	0.360	T	M	AVX1,PRE
*49470 X01276%A#	27	50	K,M	BX	3	N,L,M,J,K	0.360	T	M	AVX1,PRE
*49470 X01336%A#	33	50	K,M	BX	3	N,L,M,J,K	0.360	T	M	AVX1,PRE
*49470 X01396%A#	39	50	K,M	BX	3	N,L,M,J,K	0.480	T	M	AVX1,PRE
*49470 X01476%A#	47	50	K,M	BX	3	N,L,M,J,K	0.650	T	M	AVX1,PRE
*49470 X01476%A#	47	50	K,M	BX	2	A,B,C,D,F	0.240	-	M	AVX1
*49470 X01566%A#	56	50	K,M	BX	1	N,L,M,J,K	0.360	-	M	AVX1
*49470 X01566%A#	56	50	K,M	BX	2	A,B,C,D,F	0.240	-	M	AVX1
*49470 X01686%A#	68	50	K,M	BX	1	N,L,M,J,K	0.480	-	M	AVX1

*49470 X01686%A#	68	50	K,M	BX	2	A,B,C,D,F	0.360	-	M	AVX1
*49470 X01826%A#	82	50	K,M	BX	1	N,L,M,J,K	0.480	-	M	AVX1
*49470 X01826%A#	82	50	K,M	BX	2	A,B,C,D,F	0.360	-	M	AVX1
*49470 X01107%A#	100	50	K,M	BX	1	N,L,M,J,K	0.650	-	M	AVX1
*49470 X01107%A#	100	50	K,M	BX	2	A,B,C,D,F	0.480	-	M	AVX1
*49470 X01127%A#	120	50	K,M	BX	2	N,L,M,J,K	0.480	-	M	AVX1
*49470 X01157%A#	150	50	K,M	BX	2	N,L,M,J,K	0.650	-	M	AVX1
*49470 X01187%A#	180	50	K,M	BX	6	N,L,M,J,K	0.480	-	M	AVX1
*49470 X01227%A#	220	50	K,M	BX	6	N,L,M,J,K	0.480	-	M	AVX1
*49470 X01277%A#	270	50	K,M	BX	6	N,L,M,J,K	0.650	-	M	AVX1

MIL-PRF-49470/1 Ceramic Switch Mode Power Supply (SMPS) Capacitors, 100 V Rated

Part Number	Capacitance (uF)	Rated Volt (V)	Cap. Tol. (%)	Temp. Char.	Case Code	Lead Style (#)	Max. "A" Dimension	Level 1 (*)	Level 2 (*)	Manufacturer
*49470X01684%B#	0.680	100	K,M	BX	5	N,L,M,J,K	0.120	T	M	AVX1,PRE,JDI
*49470X01824%B#	0.820	100	K,M	BX	5	N,L,M,J,K	0.240	T	M	AVX1,PRE,JDI
*49470X01105%B#	1.0	100	K,M	BX	5	N,L,M,J,K	0.240	T	M	AVX1,PRE,JDI
*49470X01125%B#	1.2	100	K,M	BX	5	N,L,M,J,K	0.240	T	M	AVX1,PRE,JDI
*49470X01155%B#	1.5	100	K,M	BX	5	N,L,M,J,K	0.360	T	M	AVX1,PRE,JDI
*49470X01185%B#	1.8	100	K,M	BX	5	N,L,M,J,K	0.360	T	M	AVX1,PRE,JDI
*49470X01225%B#	2.2	100	K,M	BX	5	N,L,M,J,K	0.480	T	M	AVX1,PRE,JDI
*49470X01225%B#	2.2	100	K,M	BX	4	A,B,D,C,F	0.240	T	M	AVX1,PRE,JDI
*49470X01275%B#	2.7	100	K,M	BX	5	N,L,M,J,K	0.480	T	M	AVX1,PRE,JDI
*49470X01335%B#	3.3	100	K,M	BX	5	N,L,M,J,K	0.650	T	M	AVX1,PRE,JDI
*49470X01335%B#	3.3	100	K,M	BX	4	A,B,D,C,F	0.240	T	M	AVX1,PRE,JDI
*49470X01395%B#	3.9	100	K,M	BX	4	N,L,M,J,K	0.360	T	M	AVX1,PRE,JDI
*49470X01475%B#	4.7	100	K,M	BX	4	N,L,M,J,K	0.360	T	M	AVX1,PRE,JDI
*49470X01565%B#	5.6	100	K,M	BX	4	N,L,M,J,K	0.480	T	M	AVX1,PRE,JDI
*49470X01685%B#	6.8	100	K,M	BX	4	N,L,M,J,K	0.480	T	M	AVX1,PRE,JDI
*49470X01825%B#	8.2	100	K,M	BX	4	N,L,M,J,K	0.650	T	M	AVX1,PRE,JDI
*49470X01825%B#	8.2	100	K,M	BX	3	A,B,D,C,F	0.240	T	M	AVX1,PRE,JDI
*49470X01106%B#	10	100	K,M	BX	3	N,L,M,J,K	0.240	T	M	AVX1,PRE,JDI
*49470X01126%B#	12	100	K,M	BX	3	N,L,M,J,K	0.240	T	M	AVX1,PRE,JDI
*49470X01156%B#	15	100	K,M	BX	3	N,L,M,J,K	0.360	T	M	AVX1,PRE,JDI
*49470X01186%B#	18	100	K,M	BX	3	N,L,M,J,K	0.360	T	M	AVX1,PRE,JDI
*49470X01226%B#	22	100	K,M	BX	3	N,L,M,J,K	0.480	T	M	AVX1,PRE,JDI
*49470X01276%B#	27	100	K,M	BX	3	N,L,M,J,K	0.650	T	M	AVX1,PRE,JDI
*49470X01276%B#	27	100	K,M	BX	2	A,B,D,C,F	0.240	-	M	AVX1
*49470X01336%B#	33	100	K,M	BX	1	N,L,M,J,K	0.360	-	M	AVX1
*49470X01336%B#	33	100	K,M	BX	2	A,B,D,C,F	0.240	-	M	AVX1
*49470X01396%B#	39	100	K,M	BX	1	N,L,M,J,K	0.480	-	M	AVX1
*49470X01396%B#	39	100	K,M	BX	2	A,B,D,C,F	0.360	-	M	AVX1
*49470X01476%B#	47	100	K,M	BX	1	N,L,M,J,K	0.480	-	M	AVX1
*49470X01476%B#	47	100	K,M	BX	2	A,B,D,C,F	0.360	-	M	AVX1
*49470X01566%B#	56	100	K,M	BX	1	N,L,M,J,K	0.650	-	M	AVX1

*49470X01686%B#	68	100	K,M	BX	2	N,L,M,J,K	0.480	-	M	AVX1
*49470X01826%B#	82	100	K,M	BX	2	N,L,M,J,K	0.650	-	M	AVX1
*49470X01107%B#	100	100	K,M	BX	6	N,L,M,J,K	0.360	-	M	AVX1
*49470X01127%B#	120	100	K,M	BX	6	N,L,M,J,K	0.360	-	M	AVX1
*49470X01157%B#	150	100	K,M	BX	6	N,L,M,J,K	0.480	-	M	AVX1
*49470X01187%B#	180	100	K,M	BX	6	N,L,M,J,K	0.650	-	M	AVX1

MIL-PRF-49470/1 Ceramic Switch Mode Power Supply (SMPS) Capacitors, 200 V Rated

Part Number	Capacitance (uF)	Rated Volt (V)	Cap. Tol. (%)	Temp. Char.	Case Code	Lead Style (#)	Max. "A" Dimension	Level 1 (*)	Level 2 (*)	Manufacturer
*49470R01474%C#	0.470	200	K,M	BR	5	N,L,M,J,K	0.240	T	M	AVX1,PRE,JDI
*49470R01564%C#	0.560	200	K,M	BR	5	N,L,M,J,K	0.240	T	M	AVX1,PRE,JDI
*49470R01684%C#	0.680	200	K,M	BR	5	N,L,M,J,K	0.360	T	M	AVX1,PRE,JDI
*49470R01824%C#	0.820	200	K,M	BR	5	N,L,M,J,K	0.360	T	M	AVX1,PRE,JDI
*49470R01105%C#	1.0	200	K,M	BR	5	N,L,M,J,K	0.480	T	M	AVX1,PRE,JDI
*49470R01105%C#	1.0	200	K,M	BR	4	A,B,D,C,F	0.120	T	M	AVX1,PRE,JDI
*49470R01125%C#	1.2	200	K,M	BR	5	N,L,M,J,K	0.480	T	M	AVX1,PRE,JDI
*49470R01125%C#	1.2	200	K,M	BR	4	A,B,D,C,F	0.240	T	M	AVX1,PRE,JDI
*49470R01155%C#	1.5	200	K,M	BR	5	N,L,M,J,K	0.650	T	M	AVX1,PRE,JDI
*49470R01155%C#	1.5	200	K,M	BR	4	A,B,D,C,F	0.240	T	M	AVX1,PRE,JDI
*49470R01185%C#	1.8	200	K,M	BR	4	N,L,M,J,K	0.360	T	M	AVX1,PRE,JDI
*49470R01225%C#	2.2	200	K,M	BR	4	N,L,M,J,K	0.360	T	M	AVX1,PRE,JDI
*49470R01275%C#	2.7	200	K,M	BR	4	N,L,M,J,K	0.480	T	M	AVX1,PRE,JDI
*49470R01335%C#	3.3	200	K,M	BR	4	N,L,M,J,K	0.480	T	M	AVX1,PRE,JDI
*49470R01395%C#	3.9	200	K,M	BR	4	N,L,M,J,K	0.650	T	M	AVX1,PRE,JDI
*49470R01395%C#	3.9	200	K,M	BR	3	A,B,D,C,F	0.240	T	M	AVX1,PRE,JDI
*49470R01475%C#	4.7	200	K,M	BR	3	N,L,M,J,K	0.240	T	M	AVX1,PRE,JDI
*49470R01565%C#	5.6	200	K,M	BR	3	N,L,M,J,K	0.240	T	M	AVX1,PRE,JDI
*49470R01685%C#	6.8	200	K,M	BR	3	N,L,M,J,K	0.360	T	M	AVX1,PRE,JDI
*49470R01825%C#	8.2	200	K,M	BR	3	N,L,M,J,K	0.360	T	M	AVX1,PRE,JDI
*49470R01106%C#	10	200	K,M	BR	3	N,L,M,J,K	0.480	T	M	AVX1,PRE,JDI
*49470R01126%C#	12	200	K,M	BR	3	N,L,M,J,K	0.650	T	M	AVX1,PRE,JDI
*49470R01156%C#	15	200	K,M	BR	1	N,L,M,J,K	0.360	--	M	AVX1
*49470R01156%C#	15	200	K,M	BR	2	A,B,D,C,F	0.240	--	M	AVX1
*49470R01186%C#	18	200	K,M	BR	1	N,L,M,J,K	0.480	--	M	AVX1
*49470R01186%C#	18	200	K,M	BR	2	A,B,D,C,F	0.360	--	M	AVX1
*49470R01226%C#	22	200	K,M	BR	1	N,L,M,J,K	0.650	--	M	AVX1
*49470R01226%C#	22	200	K,M	BR	2	A,B,D,C,F	0.360	--	M	AVX1
*49470R01276%C#	27	200	K,M	BR	1	N,L,M,J,K	0.650	--	M	AVX1
*49470R01276%C#	27	200	K,M	BR	2	A,B,D,C,F	0.480	--	M	AVX1
*49470R01336%C#	33	200	K,M	BR	2	N,L,M,J,K	0.480	--	M	AVX1
*49470R01396%C#	39	200	K,M	BR	2	N,L,M,J,K	0.650	--	M	AVX1
*49470R01476%C#	47	200	K,M	BR	6	N,L,M,J,K	0.240	--	M	AVX1
*49470R01566%C#	56	200	K,M	BR	6	N,L,M,J,K	0.360	--	M	AVX1
*49470R01686%C#	68	200	K,M	BR	6	N,L,M,J,K	0.360	--	M	AVX1

*49470R01826%C#	82	200	K,M	BR	6	N,L,M,J,K	0.480	--	M	AVX1
*49470R01107%C#	100	200	K,M	BR	6	N,L,M,J,K	0.650	--	M	AVX1
*49470R01127%C#	120	200	K,M	BR	6	N,L,M,J,K	0.650	--	M	AVX1

MIL-PRF-49470/1 Ceramic Switch Mode Power Supply (SMPS) Capacitors, 500 V Rated

Part Number	Capacitance (uF)	Rated Volt< (V)	Cap. Tol. (%)	Temp. Char.	Case Code	Lead Style (#)	Max. "A" Dimension	Level 1 (*)	Level 2 (*)	Manufacturer
*49470Q01154%E#	0.15	500	K,M	BQ	5	N,L,M,J,K	0.120	T	M	AVX1,PRE
*49470Q01184%E#	0.18	500	K,M	BQ	5	N,L,M,J,K	0.240	T	M	AVX1,PRE
*49470Q01224%E#	0.22	500	K,M	BQ	5	N,L,M,J,K	0.240	T	M	AVX1,PRE
*49470Q01274%E#	0.27	500	K,M	BQ	5	N,L,M,J,K	0.240	T	M	AVX1,PRE
*49470Q01334%E#	0.33	500	K,M	BQ	5	N,L,M,J,K	0.360	T	M	AVX1,PRE
*49470Q01394%E#	0.39	500	K,M	BQ	5	N,L,M,J,K	0.360	T	M	AVX1,PRE
*49470Q01474%E#	0.47	500	K,M	BQ	5	N,L,M,J,K	0.360	T	M	AVX1,PRE
*49470Q01564%E#	0.56	500	K,M	BQ	5	N,L,M,J,K	0.480	T	M	AVX1,PRE
*49470Q01564%E#	0.56	500	K,M	BQ	4	A,B,D,C,F	0.240	T	M	AVX1,PRE
*49470Q01684%E#	0.68	500	K,M	BQ	5	N,L,M,J,K	0.650	T	M	AVX1,PRE
*49470Q01684%E#	0.68	500	K,M	BQ	4	A,B,D,C,F	0.240	T	M	AVX1,PRE
*49470Q01824%E#	0.82	500	K,M	BQ	4	N,L,M,J,K	0.360	T	M	AVX1,PRE
*49470Q01105%E#	1	500	K,M	BQ	4	N,L,M,J,K	0.360	T	M	AVX1,PRE
*49470Q01125%E#	1.2	500	K,M	BQ	4	N,L,M,J,K	0.360	T	M	AVX1,PRE
*49470Q01155%E#	1.5	500	K,M	BQ	4	N,L,M,J,K	0.480	T	M	AVX1,PRE
*49470Q01185%E#	1.8	500	K,M	BQ	4	N,L,M,J,K	0.650	T	M	AVX1,PRE
*49470Q01185%E#	1.8	500	K,M	BQ	3	A,B,D,C,F	0.240	T	M	AVX1,PRE
*49470Q01225%E#	2.2	500	K,M	BQ	3	N,L,M,J,K	0.240	T	M	AVX1,PRE
*49470Q01275%E#	2.7	500	K,M	BQ	3	N,L,M,J,K	0.360	T	M	AVX1,PRE
*49470Q01335%E#	3.3	500	K,M	BQ	3	N,L,M,J,K	0.360	T	M	AVX1,PRE
*49470Q01395%E#	3.9	500	K,M	BQ	3	N,L,M,J,K	0.360	T	M	AVX1,PRE
*49470Q01475%E#	4.7	500	K,M	BQ	3	N,L,M,J,K	0.480	T	M	AVX1,PRE
*49470Q01565%E#	5.6	500	K,M	BQ	3	N,L,M,J,K	0.650	T	M	AVX1,PRE
*49470Q01565%E#	5.6	500	K,M	BQ	2	A,B,D,C,F	0.240	--	M	AVX1
*49470Q01685%E#	6.8	500	K,M	BQ	1	N,L,M,J,K	0.480	--	M	AVX1
*49470Q01685%E#	6.8	500	K,M	BQ	2	A,B,D,C,F	0.240	--	M	AVX1
*49470Q01825%E#	8.2	500	K,M	BQ	1	N,L,M,J,K	0.480	--	M	AVX1
*49470Q01825%E#	8.2	500	K,M	BQ	2	A,B,D,C,F	0.360	--	M	AVX1
*49470Q01106%E#	10	500	K,M	BQ	1	N,L,M,J,K	0.480	--	M	AVX1
*49470Q01106%E#	10	500	K,M	BQ	2	A,B,D,C,F	0.360	--	M	AVX1
*49470Q01126%E#	12	500	K,M	BQ	1	N,L,M,J,K	0.650	--	M	AVX1
*49470Q01126%E#	12	500	K,M	BQ	2	A,B,D,C,F	0.480	--	M	AVX1
*49470Q01156%E#	15	500	K,M	BQ	2	N,L,M,J,K	0.650	--	M	AVX1
*49470Q01186%E#	18	500	K,M	BQ	2	N,L,M,J,K	0.650	--	M	AVX1
*49470Q01226%E#	22	500	K,M	BQ	6	N,L,M,J,K	0.360	--	M	AVX1
*49470Q01276%E#	27	500	K,M	BQ	6	N,L,M,J,K	0.360	--	M	AVX1
*49470Q01336%E#	33	500	K,M	BQ	6	N,L,M,J,K	0.480	--	M	AVX1
*49470Q01396%E#	39	500	K,M	BQ	6	N,L,M,J,K	0.650	--	M	AVX1

Part Number	Capacitance (uF)	Rated Volt (V)	Cap. Tol. (%)	Temp. Char.	Case Code	Lead Style (#)	Max. "A" Dimension	Level	Manufacturer
M49470P01563%A#	0.056	50	J,K	BP	5	J,L,N	0.120	3	N/A
M49470P01683%A#	0.068	50	J,K	BP	5	J,L,N	0.240	3	N/A
M49470P01823%A#	0.082	50	J,K	BP	5	J,L,N	0.240	3	N/A
M49470P01104%A#	0.1	50	J,K	BP	5	J,L,N	0.240	3	N/A
M49470P01124%A#	0.12	50	J,K	BP	5	J,L,N	0.360	3	N/A
M49470P01154%A#	0.15	50	J,K	BP	5	J,L,N	0.360	3	N/A
M49470P01184%A#	0.180	50	J,K	BP	5	J,L,N	0.480	3	N/A
M49470P01224%A#	0.220	50	J,K	BP	5	J,L,N	0.480	3	N/A
M49470P01274%A#	0.270	50	J,K	BP	5	J,L,N	0.650	3	N/A
M49470P01334%A#	0.330	50	J,K	BP	4	J,L,N	0.360	3	N/A
M49470P01394%A#	0.390	50	J,K	BP	4	J,L,N	0.480	3	N/A
M49470P01474%A#	0.470	50	J,K	BP	4	J,L,N	0.480	3	N/A
M49470P01564%A#	0.560	50	J,K	BP	4	J,L,N	0.650	3	N/A
M49470P01684%A#	0.680	50	J,K	BP	3	J,L,N	0.240	3	N/A
M49470P01824%A#	0.820	50	J,K	BP	3	J,L,N	0.240	3	N/A
M49470P01105%A#	1.0	50	J,K	BP	3	J,L,N	0.360	3	N/A
M49470X01105%A#	1.0	50	K,M	BX	5	J,L,N	0.120	3	N/A
M49470P01125%A#	1.2	50	J,K	BP	3	J,L,N	0.360	3	N/A
M49470X01125%A#	1.2	50	K,M	BX	5	J,L,N	0.120	3	N/A
M49470P01155%A#	1.5	50	J,K	BP	3	J,L,N	0.480	3	N/A
M49470X01155%A#	1.5	50	K,M	BX	5	J,L,N	0.240	3	N/A
M49470P01185%A#	1.8	50	J,K	BP	3	J,L,N	0.480	3	N/A
M49470X01185%A#	1.8	50	K,M	BX	5	J,L,N	0.240	3	N/A
M49470P01225%A#	2.2	50	J,K	BP	3	J,L,N	0.650	3	N/A
M49470X01225%A#	2.2	50	K,M	BX	5	J,L,N	0.240	3	N/A
M49470P01275%A#	2.7	50	J,K	BP	1	J,L,N	0.360	3	N/A
M49470X01275%A#	2.7	50	K,M	BX	5	J,L,N	0.360	3	N/A
M49470P01335%A#	3.3	50	J,K	BP	1	J,L,N	0.480	3	N/A
M49470X01335%A#	3.3	50	K,M	BX	5	J,L,N	0.360	3	N/A
M49470P01395%A#	3.9	50	J,M	BP	1	J,L,N	0.480	3	N/A
M49470X01395%A#	3.9	50	K,M	BX	5	J,L,N	0.480	3	N/A
M49470P01475%A#	4.7	50	J,M	BP	1	J,L,N	0.650	3	N/A
M49470X01475%A#	4.7	50	K,M	BX	5	J,L,N	0.480	3	N/A
M49470P01565%A#	5.6	50	J,K	BP	2	J,L,N	0.650	3	N/A
M49470X01565%A#	5.6	50	K,M	BX	5	J,L,N	0.650	3	N/A
M49470P01685%A#	6.8	50	J,K	BP	6	J,L,N	0.360	3	N/A
M49470X01685%A#	6.8	50	K,M	BX	4	J,L,N	0.360	3	N/A
M49470P01825%A#	8.2	50	J,K	BP	6	J,L,N	0.360	3	N/A
M49470X01825%A#	8.2	50	K,M	BX	4	J,L,N	0.360	3	N/A
M49470P01106%A#	10	50	J,K	BP	6	J,L,N	0.480	3	N/A
M49470P01473%A#	0.047	100	J,K	BP	5	J,L,N	0.120	3	AVX

M49470P01563%A#	0.056	100	J,K	BP	5	J,L,N	0.120	3	AVX
M49470P01683%A#	0.068	100	J,K	BP	5	J,L,N	0.240	3	AVX
M49470P01823%A#	0.082	100	J,K	BP	5	J,L,N	0.240	3	AVX
M49470P01104%A#	0.1	100	J,K	BP	5	J,L,N	0.240	3	AVX
M49470P01124%A#	0.12	100	J,K	BP	5	J,L,N	0.360	3	AVX
M49470P01154%A#	0.15	100	J,K	BP	5	J,L,N	0.360	3	AVX
M49470P01184%A#	0.180	100	J,K	BP	5	J,L,N	0.480	3	AVX
M49470P01224%A#	0.220	100	J,K	BP	5	J,L,N	0.480	3	AVX
M49470P01274%A#	0.270	100	J,K	BP	5	J,L,N	0.650	3	AVX
M49470P01334%A#	0.330	100	J,K	BP	4	J,L,N	0.360	3	AVX
M49470P01394%A#	0.390	100	J,K	BP	4	J,L,N	0.480	3	AVX
M49470P01474%A#	0.470	100	J,K	BP	4	J,L,N	0.480	3	AVX
M49470P01564%A#	0.560	100	J,K	BP	4	J,L,N	0.650	3	AVX
M49470P01684%A#	0.680	100	J,K	BP	3	J,L,N	0.240	3	AVX
M49470P01824%A#	0.820	100	J,K	BP	3	J,L,N	0.240	3	AVX
M49470P01105%A#	1.0	100	J,K	BP	3	J,L,N	0.360	3	AVX
M49470X01105%A#	1.0	100	K,M	BX	5	J,L,N	0.120	3	AVX
M49470P01125%A#	1.2	100	J,K	BP	3	J,L,N	0.360	3	AVX
M49470X01125%A#	1.2	100	K,M	BX	5	J,L,N	0.120	3	AVX
M49470P01155%A#	1.5	100	J,K	BP	3	J,L,N	0.480	3	AVX
M49470X01155%A#	1.5	100	K,M	BX	5	J,L,N	0.240	3	AVX
M49470P01185%A#	1.8	100	J,K	BP	3	J,L,N	0.480	3	AVX
M49470X01185%A#	1.8	100	K,M	BX	5	J,L,N	0.240	3	AVX
M49470P01225%A#	2.2	100	J,K	BP	3	J,L,N	0.650	3	AVX
M49470X01225%A#	2.2	100	K,M	BX	5	J,L,N	0.240	3	AVX
M49470P01275%A#	2.7	100	J,K	BP	1	J,L,N	0.360	3	AVX
M49470X01275%A#	2.7	100	K,M	BX	5	J,L,N	0.360	3	AVX
M49470P01335%A#	3.3	100	J,K	BP	1	J,L,N	0.480	3	AVX
M49470X01335%A#	3.3	100	K,M	BX	5	J,L,N	0.360	3	AVX
M49470P01395%A#	3.9	100	J,M	BP	1	J,L,N	0.480	3	AVX
M49470X01395%A#	3.9	100	K,M	BX	5	J,L,N	0.480	3	AVX
M49470P01475%A#	4.7	100	J,M	BP	1	J,L,N	0.650	3	AVX
M49470X01475%A#	4.7	100	K,M	BX	5	J,L,N	0.480	3	AVX
M49470P01565%A#	5.6	100	J,K	BP	2	J,L,N	0.650	3	AVX
M49470X01565%A#	5.6	100	K,M	BX	5	J,L,N	0.650	3	AVX
M49470P01685%A#	6.8	100	J,K	BP	6	J,L,N	0.360	3	AVX
M49470X01685%A#	6.8	100	K,M	BX	4	J,L,N	0.360	3	AVX
M49470P01825%A#	8.2	100	J,K	BP	6	J,L,N	0.360	3	AVX
M49470X01825%A#	8.2	100	K,M	BX	4	J,L,N	0.360	3	AVX
M49470P01106%A#	10	100	J,K	BP	6	J,L,N	0.480	3	AVX
M49470X01106%A#	10	100	K,M	BX	4	J,L,N	0.480	3	AVX
M49470P01126%A#	12	100	J,K	BP	6	J,L,N	0.480	3	AVX
M49470X01126%A#	12	100	K,M	BX	4	J,L,N	0.480	3	AVX
M49470P01156%A#	15	100	J,K	BP	6	J,L,N	0.650	3	AVX
M49470X01156%A#	15	100	K,M	BX	4	J,L,N	0.650	3	AVX
M49470X01186%A#	18	100	K,M	BX	3	J,L,N	0.240	3	AVX
M49470X01226%A#	22	100	K,M	BX	3	J,L,N	0.360	3	AVX

M49470X01276%A#	27	100	K,M	BX	3	J,L,N	0.360	3	AVX
M49470X01336%A#	33	100	K,M	BX	3	J,L,N	0.360	3	AVX
M49470X01396%A#	39	100	K,M	BX	3	J,L,N	0.480	3	AVX
M49470X01476%A#	47	100	K,M	BX	3	J,L,N	0.650	3	AVX
M49470X01566%A#	56	100	K,M	BX	1	J,L,N	0.360	3	AVX
M49470X01686%A#	68	100	K,M	BX	1	J,L,N	0.480	3	AVX
M49470X01826%A#	82	100	K,M	BX	1	J,L,N	0.480	3	AVX
M49470X01107%A#	100	100	K,M	BX	1	J,L,N	0.650	3	AVX
M49470X01127%A#	120	100	K,M	BX	2	J,L,N	0.480	3	AVX
M49470X01157%A#	150	100	K,M	BX	2	J,L,N	0.650	3	AVX
M49470X01187%A#	180	100	K,M	BX	6	J,L,N	0.480	3	AVX
M49470X01227%A#	220	100	K,M	BX	6	J,L,N	0.480	3	AVX
M49470X01277%A#	270	100	K,M	BX	6	J,L,N	0.650	3	AVX
M49470P01473%B#	0.047	200	J,K	BP	5	J,L,N	0.240	3	N/A
M49470P01563%B#	0.056	200	J,K	BP	5	J,L,N	0.240	3	N/A
M49470P01683%B#	0.068	200	J,K	BP	5	J,L,N	0.240	3	N/A
M49470P01823%B#	0.082	200	J,K	BP	5	J,L,N	0.240	3	N/A
M49470P01104%B#	0.1	200	J,K	BP	5	J,L,N	0.360	3	N/A
M49470P01124%B#	0.12	200	J,K	BP	5	J,L,N	0.360	3	N/A
M49470P01154%B#	0.15	200	J,K	BP	5	J,L,N	0.480	3	N/A
M49470P01184%B#	0.18	200	J,K	BP	5	J,L,N	0.650	3	N/A
M49470P01224%B#	0.22	200	J,K	BP	5	J,L,N	0.650	3	N/A
M49470P01274%B#	0.27	200	J,K	BP	4	J,L,N	0.360	3	N/A
M49470P01334%B#	0.33	200	J,K	BP	4	J,L,N	0.480	3	N/A
M49470P01394%B#	0.39	200	J,K	BP	4	J,L,N	0.480	3	N/A
M49470P01474%B#	0.47	200	J,K	BP	4	J,L,N	0.650	3	N/A
M49470P01564%B#	0.56	200	J,K	BP	4	J,L,N	0.650	3	N/A
M49470P01684%B#	0.68	200	J,K	BP	3	J,L,N	0.240	3	N/A
M49470X01684%B#	0.68	200	K,M	BX	5	J,L,N	0.120	3	N/A
M49470P01824%B#	0.82	200	J,K	BP	3	J,L,N	0.120	3	N/A
M49470X01824%B#	0.82	200	K,M	BX	5	J,L,N	0.240	3	N/A
M49470P01105%B#	1	200	J,K	BP	3	J,L,N	0.360	3	N/A
M49470X01105%B#	1	200	K,M	BX	5	J,L,N	0.240	3	N/A
M49470P01125%B#	1.2	200	J,K	BP	3	J,L,N	0.480	3	N/A
M49470X01125%B#	1.2	200	K,M	BX	5	J,L,N	0.240	3	N/A
M49470P01155%B#	1.5	200	J,K	BP	3	J,L,N	0.480	3	N/A
M49470X01155%B#	1.5	200	K,M	BX	5	J,L,N	0.360	3	N/A
M49470P01185%B#	1.8	200	J,K	BP	3	J,L,N	0.650	3	N/A
M49470X01185%B#	1.8	200	K,M	BX	5	J,L,N	0.360	3	N/A
M49470P01225%B#	2.2	200	J,K	BP	1	J,L,N	0.480	3	N/A
M49470X01225%B#	2.2	200	K,M	BX	5	J,L,N	0.480	3	N/A
M49470P01275%B#	2.7	200	J,K	BP	1	J,L,N	0.480	3	N/A
M49470X01275%B#	2.7	200	K,M	BX	5	J,L,N	0.480	3	N/A
M49470P01335%B#	3.3	200	J,K	BP	1	J,L,N	0.650	3	N/A
M49470X01335%B#	3.3	200	K,M	BX	5	J,L,N	0.650	3	N/A
M49470P01395%B#	3.9	200	J,K	BP	2	J,L,N	0.480	3	N/A
M49470X01395%B#	3.9	200	K,M	BX	4	J,L,N	0.360	3	N/A

M49470P01475%B#	4.7	200	J,K	BP	2	J,L,N	0.650	3	N/A
M49470X01475%B#	4.7	200	K,M	BX	4	J,L,N	0.360	3	N/A
M49470P01565%B#	5.6	200	J,K	BP	6	J,L,N	0.360	3	N/A
M49470X01565%B#	5.6	200	K,M	BX	4	J,L,N	0.480	3	N/A
M49470P01685%B#	6.8	200	J,K	BP	6	J,L,N	0.360	3	N/A
M49470X01685%B#	6.8	200	K,M	BX	4	J,L,N	0.480	3	N/A
M49470P01825%B#	8.2	200	J,K	BP	6	J,L,N	0.480	3	N/A
M49470X01825%B#	8.2	200	K,M	BX	4	J,L,N	0.650	3	N/A
M49470P01106%B#	10	200	J,K	BP	6	J,L,N	0.650	3	N/A
M49470X01106%B#	10	200	K,M	BX	3	J,L,N	0.240	3	N/A
M49470P01126%B#	12	200	J,K	BP	6	J,L,N	0.650	3	N/A
M49470X01126%B#	12	200	K,M	BX	3	J,L,N	0.240	3	N/A
M49470X01156%B#	15	200	K,M	BX	3	J,L,N	0.360	3	N/A
M49470X01186%B#	18	200	K,M	BX	3	J,L,N	0.360	3	N/A
M49470X01226%B#	22	200	K,M	BX	3	J,L,N	0.480	3	N/A
M49470X01276%B#	27	200	K,M	BX	3	J,L,N	0.650	3	N/A
M49470X01336%B#	33	200	K,M	BX	1	J,L,N	0.360	3	N/A
M49470X01396%B#	39	200	K,M	BX	1	J,L,N	0.480	3	N/A
M49470X01476%B#	47	200	K,M	BX	1	J,L,N	0.480	3	N/A
M49470X01566%B#	56	200	K,M	BX	1	J,L,N	0.650	3	N/A
M49470X01686%B#	68	200	K,M	BX	2	J,L,N	0.480	3	N/A
M49470X01826%B#	82	200	K,M	BX	2	J,L,N	0.650	3	N/A
M49470X01107%B#	100	200	K,M	BX	6	J,L,N	0.360	3	N/A
M49470X01127%B#	120	200	K,M	BX	6	J,L,N	0.360	3	N/A
M49470X01157%B#	150	200	K,M	BX	6	J,L,N	0.480	3	N/A
M49470X01187%B#	180	200	K,M	BX	6	J,L,N	0.650	3	N/A
M49470P01223%C#	0.022	500	J,K	BP	5	J,L,N	0.120	3	N/A
M49470P01273%C#	0.027	500	J,K	BP	5	J,L,N	0.240	3	N/A
M49470P01333%C#	0.033	500	J,K	BP	5	J,L,N	0.240	3	N/A
M49470P01393%C#	0.039	500	J,K	BP	5	J,L,N	0.240	3	N/A
M49470P01473%C#	0.047	500	J,K	BP	5	J,L,N	0.360	3	N/A
M49470P01563%C#	0.056	500	J,K	BP	5	J,L,N	0.360	3	N/A
M49470P01683%C#	0.068	500	J,K	BP	5	J,L,N	0.480	3	N/A
M49470P01823%C#	0.082	500	J,K	BP	5	J,L,N	0.480	3	N/A
M49470P01104%C#	0.1	500	J,K	BP	5	J,L,N	0.650	3	N/A
M49470P01124%C#	0.12	500	J,K	BP	4	J,L,N	0.360	3	N/A
M49470P01154%C#	0.15	500	J,K	BP	4	J,L,N	0.360	3	N/A
M49470P01184%C#	0.18	500	J,K	BP	4	J,L,N	0.480	3	N/A
M49470P01224%C#	0.22	500	J,K	BP	4	J,L,N	0.480	3	N/A
M49470P01274%C#	0.27	500	J,K	BP	4	J,L,N	0.650	3	N/A
M49470P01334%C#	0.33	500	J,K	BP	3	J,L,N	0.240	3	N/A
M49470P01394%C#	0.39	500	J,K	BP	3	J,L,N	0.240	3	N/A
M49470P01474%C#	0.47	500	J,K	BP	3	J,L,N	0.360	3	N/A
M49470R01474%C#	0.47	500	K,M	BR	5	J,L,N	0.240	3	N/A
M49470P01564%C#	0.56	500	J,K	BP	3	J,L,N	0.360	3	N/A
M49470R01564%C#	0.56	500	K,M	BR	5	J,L,N	0.240	3	N/A
M49470P01684%C#	0.68	500	J,K	BP	3	J,L,N	0.480	3	N/A

M49470R01684%C#	0.68	500	K,M	BR	5	J,L,N	0.360	3	N/A
M49470P01824%C#	0.82	500	J,K	BP	3	J,L,N	0.650	3	N/A
M49470R01824%C#	0.82	500	K,M	BR	5	J,L,N	0.360	3	N/A
M49470P01105%C#	1	500	J,K	BP	3	J,L,N	0.650	3	N/A
M49470R01105%C#	1	500	K,M	BR	5	J,L,N	0.480	3	N/A
M49470P01125%C#	1.2	500	J,K	BP	1	J,L,N	0.480	3	N/A
M49470R01125%C#	1.2	500	K,M	BR	5	J,L,N	0.480	3	N/A
M49470P01155%C#	1.5	500	J,K	BP	1	J,L,N	0.480	3	N/A
M49470R01155%C#	1.5	500	K,M	BR	5	J,L,N	0.650	3	N/A
M49470P01185%C#	1.8	500	J,K	BP	1	J,L,N	0.650	3	N/A
M49470R01185%C#	1.8	500	K,M	BR	4	J,L,N	0.360	3	N/A
M49470P01225%C#	2.2	500	J,K	BP	2	J,L,N	0.480	3	N/A
M49470R01225%C#	2.2	500	K,M	BR	4	J,L,N	0.360	3	N/A
M49470P01275%C#	2.7	500	J,K	BP	2	J,L,N	0.650	3	N/A
M49470R01275%C#	2.7	500	K,M	BR	4	J,L,N	0.480	3	N/A
M49470P01335%C#	3.3	500	J,K	BP	6	J,L,N	0.360	3	N/A
M49470R01335%C#	3.3	500	K,M	BR	4	J,L,N	0.480	3	N/A
M49470P01395%C#	3.9	500	J,K	BP	6	J,L,N	0.360	3	N/A
M49470R01395%C#	3.9	500	K,M	BR	4	J,L,N	0.650	3	N/A
M49470Q01224%E#	0.22	500	K,M	BQ	5	J,L,N	0.240	3	N/A
M49470P01274%E#	0.27	500	J,K	BP	3	J,L,N	0.360	3	N/A
M49470Q01274%E#	0.27	500	K,M	BQ	5	J,L,N	0.240	3	N/A
M49470P01334%E#	0.33	500	J,K	BP	3	J,L,N	0.480	3	N/A
M49470Q01334%E#	0.33	500	K,M	BQ	5	J,L,N	0.360	3	N/A
M49470P01394%E#	0.39	500	J,K	BP	3	J,L,N	0.650	3	N/A
M49470Q01394%E#	0.39	500	K,M	BQ	5	J,L,N	0.360	3	N/A
M49470P01474%E#	0.47	500	J,K	BP	1	J,L,N	0.360	3	N/A
M49470Q01474%E#	0.47	500	K,M	BQ	5	J,L,N	0.360	3	N/A
M49470P01564%E#	0.56	500	J,K	BP	1	J,L,N	0.480	3	N/A
M49470Q01564%E#	0.56	500	K,M	BQ	5	J,L,N	0.480	3	N/A
M49470P01684%E#	0.68	500	J,K	BP	1	J,L,N	0.480	3	N/A
M49470Q01684%E#	0.68	500	K,M	BQ	5	J,L,N	0.650	3	N/A
M49470P01824%E#	0.82	500	J,K	BP	1	J,L,N	0.650	3	N/A
M49470Q01824%E#	0.82	500	K,M	BQ	4	J,L,N	0.360	3	N/A
M49470P01105%E#	1	500	J,K	BP	2	J,L,N	0.480	3	N/A
M49470Q01105%E#	1	500	K,M	BQ	4	J,L,N	0.360	3	N/A
M49470P01125%E#	1.2	500	J,K	BP	2	J,L,N	0.650	3	N/A
M49470Q01125%E#	1.2	500	K,M	BQ	4	J,L,N	0.360	3	N/A
M49470P01155%E#	1.5	500	J,K	BP	6	J,L,N	0.360	3	N/A
M49470Q01155%E#	1.5	500	K,M	BQ	4	J,L,N	0.480	3	N/A
M49470P01185%E#	1.8	500	J,K	BP	6	J,L,N	0.480	3	N/A
M49470Q01185%E#	1.8	500	K,M	BQ	4	J,L,N	0.650	3	N/A
M49470P01225%E#	2.2	500	J,K	BP	6	J,L,N	0.650	3	N/A
M49470Q01225%E#	2.2	500	K,M	BQ	3	J,L,N	0.240	3	N/A
M49470Q01275%E#	2.7	500	K,M	BQ	3	J,L,N	0.360	3	N/A
M49470Q01335%E#	3.3	500	K,M	BQ	3	J,L,N	0.360	3	N/A
M49470Q01395%E#	3.9	500	K,M	BQ	3	J,L,N	0.360	3	N/A

M49470Q01475%E#	4.7	500	K,M	BQ	3	J,L,N	0.480	3	N/A
M49470Q01565%E#	5.6	500	K,M	BQ	3	J,L,N	0.650	3	N/A
M49470Q01685%E#	6.8	500	K,M	BQ	1	J,L,N	0.480	3	N/A
M49470Q01825%E#	8.2	500	K,M	BQ	1	J,L,N	0.480	3	N/A
M49470Q01106%E#	10	500	K,M	BQ	1	J,L,N	0.480	3	N/A
M49470Q01126%E#	12	500	K,M	BQ	1	J,L,N	0.650	3	N/A
M49470Q01156%E#	15	500	K,M	BQ	2	J,L,N	0.650	3	N/A
M49470Q01186%E#	18	500	K,M	BQ	2	J,L,N	0.650	3	N/A
M49470Q01226%E#	22	500	K,M	BQ	6	J,L,N	0.360	3	N/A
M49470Q01276%E#	27	500	K,M	BQ	6	J,L,N	0.360	3	N/A
M49470Q01336%E#	33	500	K,M	BQ	6	J,L,N	0.480	3	N/A
M49470Q01396%E#	39	500	K,M	BQ	6	J,L,N	0.650	3	N/A

MIL-PRF-49470/2 (PS02 Style), CAPACITORS

Fixed, Ceramic Dielectric, Switch Mode Power Supply

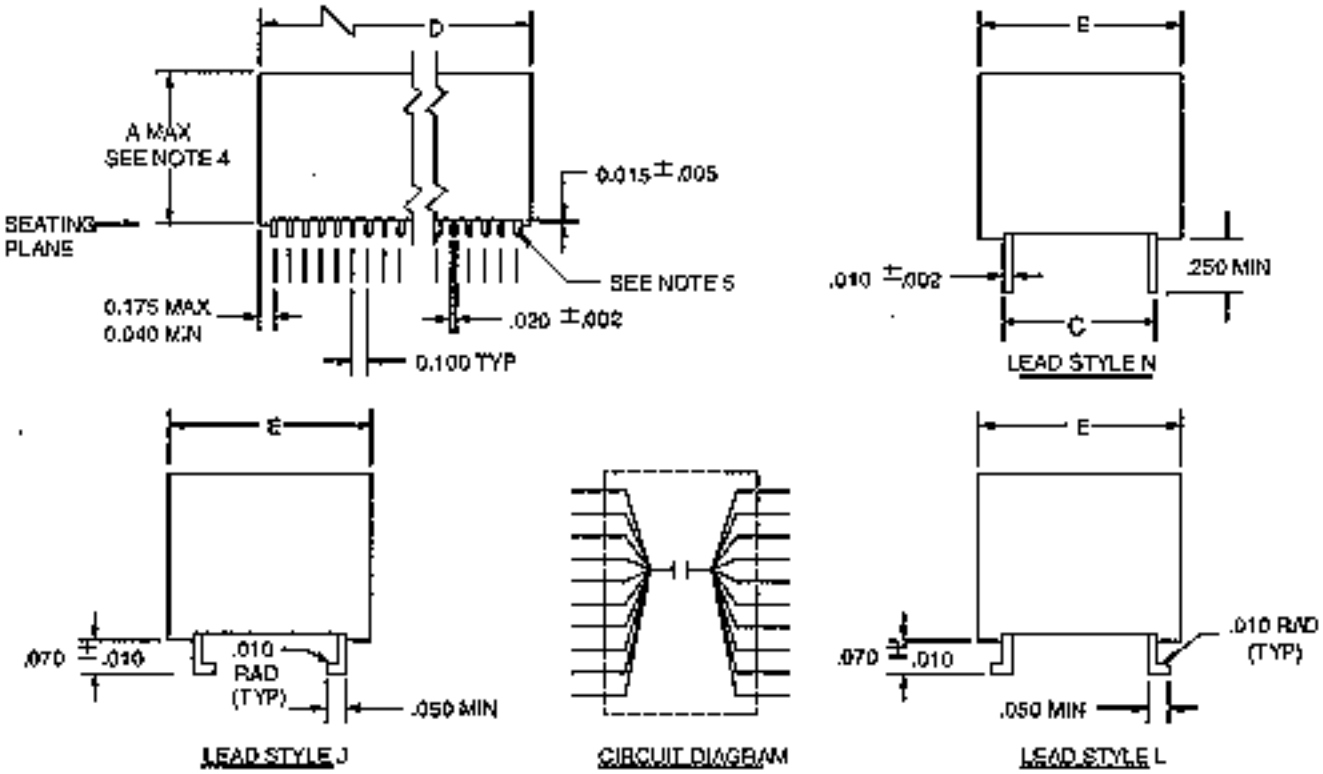

Physical Dimensions Table

Case Code	C +/-0.025	D +/- 0.025	E (Max)	Number of Pins per Side
1	0.450	2.155	0.580	20
2	0.800	1.615	0.950	15
3	0.450	1.155	0.580	10
4	0.400	0.485	0.485	4
5	0.250	0.355	0.355	3
6	1.250	1.430	1.430	20

Notes:

1) Dimensions are in inches.

2) Metric equivalents are given for general information only.

3) Unless otherwise specified, tolerances are +/-0.010 inches.

4) See the part list table for specific maximum A dimension. For all lead styles, the number of chips is determined by the capacitance and voltage rating.

5) Lead alignment within pin rows shall be within +/-0.005 inches.

MIL-PRF-49470/2 Ceramic Switch Mode Power Supply (SMPS) Capacitors, 50 V Rated

Part Number	Capacitance (uF)	Rated Volt (V)	Cap. Tol. (%)	Temp. Char.	Case Code	Lead Style (#)	Max. "A" Dimension	Level 1 (*)	Level 2 (*)	Manufacturer
*49470X02105%A#	1.0	50	K,M	BX	5	N,L,M,J,K	0.270	T	M	AVX1
*49470X02125%A#	1.2	50	K,M	BX	5	N,L,M,J,K	0.270	T	M	AVX1
*49470X02155%A#	1.5	50	K,M	BX	5	N,L,M,J,K	0.390	T	M	AVX1
*49470X02185%A#	1.8	50	K,M	BX	5	N,L,M,J,K	0.390	T	M	AVX1
*49470X02225%A#	2.2	50	K,M	BX	5	N,L,M,J,K	0.390	T	M	AVX1
*49470X02275%A#	2.7	50	K,M	BX	5	N,L,M,J,K	0.530	T	M	AVX1
*49470X02335%A#	3.3	50	K,M	BX	5	N,L,M,J,K	0.530	T	M	AVX1
*49470X02395%A#	3.9	50	K,M	BX	5	N,L,M,J,K	0.660	T	M	AVX1
*49470X02475%A#	4.7	50	K,M	BX	5	N,L,M,J,K	0.660	T	M	AVX1
*49470X02475%A#	4.7	50	K,M	BX	4	A,B,C,D,F	0.390	T	M	AVX1
*49470X02565%A#	5.6	50	K,M	BX	5	N,L,M,J,K	0.800	T	M	AVX1
*49470X02565%A#	5.6	50	K,M	BX	4	A,B,C,D,F	0.390	T	M	AVX1
*49470X02685%A#	6.8	50	K,M	BX	4	N,L,M,J,K	0.530	T	M	AVX1
*49470X02825%A#	8.2	50	K,M	BX	4	N,L,M,J,K	0.530	T	M	AVX1
*49470X02106%A#	10	50	K,M	BX	4	N,L,M,J,K	0.660	T	M	AVX1
*49470X02126%A#	12	50	K,M	BX	4	N,L,M,J,K	0.660	T	M	AVX1
*49470X02156%A#	15	50	K,M	BX	4	N,L,M,J,K	0.800	T	M	AVX1
*49470X02156%A#	15	50	K,M	BX	3	A,B,C,D,F	0.390	T	M	AVX1
*49470X02186%A#	18	50	K,M	BX	3	N,L,M,J,K	0.390	T	M	AVX1

*49470X02226%A#	22	50	K,M	BX	3	N,L,M,J,K	0.530	T	M	AVX1
*49470X02276%A#	27	50	K,M	BX	3	N,L,M,J,K	0.530	T	M	AVX1
*49470X02336%A#	33	50	K,M	BX	3	N,L,M,J,K	0.530	T	M	AVX1
*49470X02396%A#	39	50	K,M	BX	3	N,L,M,J,K	0.660	T	M	AVX1
*49470X02476%A#	47	50	K,M	BX	3	N,L,M,J,K	0.800	T	M	AVX1
*49470X02476%A#	47	50	K,M	BX	2	A,B,C,D,F	0.390	-	M	AVX1
*49470X02566%A#	56	50	K,M	BX	1	N,L,M,J,K	0.530	-	M	AVX1
*49470X02566%A#	56	50	K,M	BX	2	A,B,C,D,F	0.390	-	M	AVX1
*49470X02686%A#	68	50	K,M	BX	1	N,L,M,J,K	0.660	-	M	AVX1
*49470X02686%A#	68	50	K,M	BX	2	A,B,C,D,F	0.530	-	M	AVX1
*49470X02826%A#	82	50	K,M	BX	1	N,L,M,J,K	0.660	-	M	AVX1
*49470X02826%A#	82	50	K,M	BX	2	A,B,C,D,F	0.530	-	M	AVX1
*49470X02107%A#	100	50	K,M	BX	1	N,L,M,J,K	0.800	-	M	AVX1
*49470X02107%A#	100	50	K,M	BX	2	A,B,C,D,F	0.660	-	M	AVX1
*49470X02127%A#	120	50	K,M	BX	2	N,L,M,J,K	0.660	-	M	AVX1
*49470X02157%A#	150	50	K,M	BX	2	N,L,M,J,K	0.800	-	M	AVX1
*49470X02187%A#	180	50	K,M	BX	6	N,L,M,J,K	0.660	-	M	AVX1
*49470X02227%A#	220	50	K,M	BX	6	N,L,M,J,K	0.660	-	M	AVX1
*49470X02277%A#	270	50	K,M	BX	6	N,L,M,J,K	0.800	-	M	AVX1

MIL-PRF-49470/2 Ceramic Switch Mode Power Supply (SMPS) Capacitors, 100 V Rated

Part Number	Capacitance (uF)	Rated Volt (V)	Cap. Tol. (%)	Temp. Char.	Case Code	Lead Style (#)	Max. "A" Dimension	Level 1 (*)	Level 2 (*)	Manufacturer
*49470X02684%B#	0.68	100	K,M	BX	5	N,L,M,J,K	0.270	T	M	AVX1
*49470X02824%B#	0.82	100	K,M	BX	5	N,L,M,J,K	0.390	T	M	AVX1
*49470X02105%B#	1.0	100	K,M	BX	5	N,L,M,J,K	0.390	T	M	AVX1
*49470X02125%B#	1.2	100	K,M	BX	5	N,L,M,J,K	0.390	T	M	AVX1
*49470X02155%B#	1.5	100	K,M	BX	5	N,L,M,J,K	0.530	T	M	AVX1
*49470X02185%B#	1.8	100	K,M	BX	5	N,L,M,J,K	0.530	T	M	AVX1
*49470X02225%B#	2.2	100	K,M	BX	5	N,L,M,J,K	0.660	T	M	AVX1
*49470X02225%B#	2.2	100	K,M	BX	4	A,B,D,C,F	0.390	T	M	AVX1
*49470X02275%B#	2.7	100	K,M	BX	5	N,L,M,J,K	0.660	T	M	AVX1
*49470X02335%B#	3.3	100	K,M	BX	5	N,L,M,J,K	0.800	T	M	AVX1
*49470X02335%B#	3.3	100	K,M	BX	4	A,B,D,C,F	0.390	T	M	AVX1
*49470X02395%B#	3.9	100	K,M	BX	4	N,L,M,J,K	0.530	T	M	AVX1
*49470X02475%B#	4.7	100	K,M	BX	4	N,L,M,J,K	0.530	T	M	AVX1
*49470X02565%B#	5.6	100	K,M	BX	4	N,L,M,J,K	0.660	T	M	AVX1
*49470X02685%B#	6.8	100	K,M	BX	4	N,L,M,J,K	0.660	T	M	AVX1
*49470X02825%B#	8.2	100	K,M	BX	4	N,L,M,J,K	0.800	T	M	AVX1
*49470X02825%B#	8.2	100	K,M	BX	3	A,B,D,C,F	0.390	T	M	AVX1
*49470X02106%B#	10	100	K,M	BX	3	N,L,M,J,K	0.390	T	M	AVX1
*49470X02126%B#	12	100	K,M	BX	3	N,L,M,J,K	0.390	T	M	AVX1
*49470X02156%B#	15	100	K,M	BX	3	N,L,M,J,K	0.530	T	M	AVX1
*49470X02186%B#	18	100	K,M	BX	3	N,L,M,J,K	0.530	T	M	AVX1
*49470X02226%B#	22	100	K,M	BX	3	N,L,M,J,K	0.660	T	M	AVX1

*49470X02276%B#	27	100	K,M	BX	3	N,L,M,J,K	0.800	T	M	AVX1
*49470X02276%B#	27	100	K,M	BX	2	A,B,D,C,F	0.390	-	M	AVX1
*49470X02336%B#	33	100	K,M	BX	1	N,L,M,J,K	0.530	-	M	AVX1
*49470X02336%B#	33	100	K,M	BX	2	A,B,D,C,F	0.390	-	M	AVX1
*49470X02396%B#	39	100	K,M	BX	1	N,L,M,J,K	0.660	-	M	AVX1
*49470X02396%B#	39	100	K,M	BX	2	A,B,D,C,F	0.530	-	M	AVX1
*49470X02476%B#	47	100	K,M	BX	1	N,L,M,J,K	0.660	-	M	AVX1
*49470X02476%B#	47	100	K,M	BX	2	A,B,D,C,F	0.530	-	M	AVX1
*49470X02566%B#	56	100	K,M	BX	1	N,L,M,J,K	0.800	-	M	AVX1
*49470X02686%B#	68	100	K,M	BX	2	N,L,M,J,K	0.660	-	M	AVX1
*49470X02826%B#	82	100	K,M	BX	2	N,L,M,J,K	0.800	-	M	AVX1
*49470X02107%B#	100	100	K,M	BX	6	N,L,M,J,K	0.530	-	M	AVX1
*49470X02127%B#	120	100	K,M	BX	6	N,L,M,J,K	0.530	-	M	AVX1
*49470X02157%B#	150	100	K,M	BX	6	N,L,M,J,K	0.660	-	M	AVX1
*49470X02187%B#	180	100	K,M	BX	6	N,L,M,J,K	0.800	-	M	AVX1

MIL-PRF-49470/2 Ceramic Switch Mode Power Supply (SMPS) Capacitors, 200 V Rated

Part Number	Capacitance (uF)	Rated Volt (V)	Cap. Tol. (%)	Temp. Char.	Case Code	Lead Style (#)	Max. "A" Dimension	Level 1 (*)	Level 2 (*)	Manufacturer
*49470R02474%C#	0.47	200	K,M	BR	5	N,L,M,J,K	0.390	T	M	AVX1
*49470R02564%C#	0.56	200	K,M	BR	5	N,L,M,J,K	0.390	T	M	AVX1
*49470R02684%C#	0.68	200	K,M	BR	5	N,L,M,J,K	0.530	T	M	AVX1
*49470R02824%C#	0.82	200	K,M	BR	5	N,L,M,J,K	0.530	T	M	AVX1
*49470R02105%C#	1.0	200	K,M	BR	5	N,L,M,J,K	0.660	T	M	AVX1
*49470R02105%C#	1.0	200	K,M	BR	4	A,B,D,C,F	0.270	T	M	AVX1
*49470R02125%C#	1.2	200	K,M	BR	5	N,L,M,J,K	0.660	T	M	AVX1
*49470R02125%C#	1.2	200	K,M	BR	4	A,B,D,C,F	0.390	T	M	AVX1
*49470R02155%C#	1.5	200	K,M	BR	5	N,L,M,J,K	0.800	T	M	AVX1
*49470R02155%C#	1.5	200	K,M	BR	4	A,B,D,C,F	0.390	T	M	AVX1
*49470R02185%C#	1.8	200	K,M	BR	4	N,L,M,J,K	0.530	T	M	AVX1
*49470R02225%C#	2.2	200	K,M	BR	4	N,L,M,J,K	0.530	T	M	AVX1
*49470R02275%C#	2.7	200	K,M	BR	4	N,L,M,J,K	0.660	T	M	AVX1
*49470R02335%C#	3.3	200	K,M	BR	4	N,L,M,J,K	0.660	T	M	AVX1
*49470R02395%C#	3.9	200	K,M	BR	4	N,L,M,J,K	0.800	T	M	AVX1
*49470R02395%C#	3.9	200	K,M	BR	3	A,B,D,C,F	0.390	T	M	AVX1
*49470R02475%C#	4.7	200	K,M	BR	3	N,L,M,J,K	0.390	T	M	AVX1
*49470R02565%C#	5.6	200	K,M	BR	3	N,L,M,J,K	0.390	T	M	AVX1
*49470R02685%C#	6.8	200	K,M	BR	3	N,L,M,J,K	0.530	T	M	AVX1
*49470R02825%C#	8.2	200	K,M	BR	3	N,L,M,J,K	0.530	T	M	AVX1
*49470R02106%C#	10	200	K,M	BR	3	N,L,M,J,K	0.660	T	M	AVX1
*49470R02126%C#	12	200	K,M	BR	3	N,L,M,J,K	0.800	T	M	AVX1
*49470R02126%C#	12	200	K,M	BR	2	A,B,D,C,F	0.390	--	M	AVX1
*49470R02156%C#	15	200	K,M	BR	1	N,L,M,J,K	0.530	--	M	AVX1
*49470R02156%C#	15	200	K,M	BR	2	A,B,D,C,F	0.390	--	M	AVX1
*49470R02186%C#	18	200	K,M	BR	1	N,L,M,J,K	0.660	--	M	AVX1

*49470R02186%C#	18	200	K,M	BR	2	A,B,D,C,F	0.530	--	M	AVX1
*49470R02226%C#	22	200	K,M	BR	1	N,L,M,J,K	0.800	--	M	AVX1
*49470R02226%C#	22	200	K,M	BR	2	A,B,D,C,F	0.530	--	M	AVX1
*49470R02276%C#	27	200	K,M	BR	1	N,L,M,J,K	0.800	--	M	AVX1
*49470R02276%C#	27	200	K,M	BR	2	A,B,D,C,F	0.660	--	M	AVX1
*49470R02336%C#	33	200	K,M	BR	2	N,L,M,J,K	0.660	--	M	AVX1
*49470R02396%C#	39	200	K,M	BR	2	N,L,M,J,K	0.800	--	M	AVX1
*49470R02476%C#	47	200	K,M	BR	6	N,L,M,J,K	0.390	--	M	AVX1
*49470R02566%C#	56	200	K,M	BR	6	N,L,M,J,K	0.530	--	M	AVX1
*49470R02686%C#	68	200	K,M	BR	6	N,L,M,J,K	0.530	--	M	AVX1
*49470R02826%C#	82	200	K,M	BR	6	N,L,M,J,K	0.660	--	M	AVX1
*49470R02107%C#	100	200	K,M	BR	6	N,L,M,J,K	0.800	--	M	AVX1
*49470R02127%C#	120	200	K,M	BR	6	N,L,M,J,K	0.800	--	M	AVX1

MIL-PRF-49470/2 Ceramic Switch Mode Power Supply (SMPS) Capacitors, 500 V Rated

Part Number	Capacitance (uF)	Rated Volt (V)	Cap. Tol. (%)	Temp. Char.	Case Code	Lead Style (#)	Max. "A" Dimension	Level 1 (*)	Level 2 (*)	Manufacturer
*49470 Q02154%E#	0.15	500	K,M	BQ	5	N,L,M,J,K	0.270	T	M	AVX1
*49470 Q02184%E#	0.18	500	K,M	BQ	5	N,L,M,J,K	0.390	T	M	AVX1
*49470 Q02224%E#	0.22	500	K,M	BQ	5	N,L,M,J,K	0.390	T	M	AVX1
*49470 Q02274%E#	0.27	500	K,M	BQ	5	N,L,M,J,K	0.390	T	M	AVX1
*49470 Q02334%E#	0.33	500	K,M	BQ	5	N,L,M,J,K	0.530	T	M	AVX1
*49470 Q02394%E#	0.39	500	K,M	BQ	5	N,L,M,J,K	0.530	T	M	AVX1
*49470 Q02474%E#	0.47	500	K,M	BQ	5	N,L,M,J,K	0.530	T	M	AVX1
*49470 Q02564%E#	0.56	500	K,M	BQ	5	N,L,M,J,K	0.660	T	M	AVX1
*49470 Q02564%E#	0.56	500	K,M	BQ	4	A,B,D,C,F	0.390	T	M	AVX1
*49470 Q02684%E#	0.68	500	K,M	BQ	5	N,L,M,J,K	0.800	T	M	AVX1
*49470 Q02684%E#	0.68	500	K,M	BQ	4	A,B,D,C,F	0.390	T	M	AVX1
*49470 Q02824%E#	0.82	500	K,M	BQ	4	N,L,M,J,K	0.530	T	M	AVX1
*49470 Q02105%E#	1	500	K,M	BQ	4	N,L,M,J,K	0.530	T	M	AVX1
*49470 Q02125%E#	1.2	500	K,M	BQ	4	N,L,M,J,K	0.530	T	M	AVX1
*49470 Q02155%E#	1.5	500	K,M	BQ	4	N,L,M,J,K	0.660	T	M	AVX1
*49470 Q02185%E#	1.8	500	K,M	BQ	4	N,L,M,J,K	0.800	T	M	AVX1
*49470 Q02185%E#	1.8	500	K,M	BQ	3	A,B,D,C,F	0.390	T	M	AVX1
*49470 Q02225%E#	2.2	500	K,M	BQ	3	N,L,M,J,K	0.390	T	M	AVX1
*49470 Q02275%E#	2.7	500	K,M	BQ	3	N,L,M,J,K	0.530	T	M	AVX1
*49470 Q02335%E#	3.3	500	K,M	BQ	3	N,L,M,J,K	0.530	T	M	AVX1
*49470 Q02395%E#	3.9	500	K,M	BQ	3	N,L,M,J,K	0.530	T	M	AVX1
*49470 Q02475%E#	4.7	500	K,M	BQ	3	N,L,M,J,K	0.660	T	M	AVX1
*49470 Q02565%E#	5.6	500	K,M	BQ	3	N,L,M,J,K	0.800	T	M	AVX1
*49470Q02565%E#	5.6	500	K,M	BQ	2	A,B,D,C,F	0.390	--	M	AVX1
*49470Q02685%E#	6.8	500	K,M	BQ	1	N,L,M,J,K	0.660	--	M	AVX1
*49470Q02685%E#	6.8	500	K,M	BQ	2	A,B,D,C,F	0.390	--	M	AVX1
*49470Q02825%E#	8.2	500	K,M	BQ	1	N,L,M,J,K	0.660	--	M	AVX1
*49470Q02825%E#	8.2	500	K,M	BQ	2	A,B,D,C,F	0.530	--	M	AVX1

*49470Q02106%E#	10	500	K,M	BQ	1	N,L,M,J,K	0.660	--	M	AVX1
*49470Q02106%E#	10	500	K,M	BQ	2	A,B,D,C,F	0.530	--	M	AVX1
*49470Q02126%E#	12	500	K,M	BQ	1	N,L,M,J,K	0.800	--	M	AVX1
*49470Q02126%E#	12	500	K,M	BQ	2	A,B,D,C,F	0.660	--	M	AVX1
*49470Q02156%E#	15	500	K,M	BQ	2	N,L,M,J,K	0.800	--	M	AVX1
*49470Q02186%E#	18	500	K,M	BQ	2	N,L,M,J,K	0.800	--	M	AVX1
*49470Q02226%E#	22	500	K,M	BQ	6	N,L,M,J,K	0.530	--	M	AVX1
*49470Q02276%E#	27	500	K,M	BQ	6	N,L,M,J,K	0.530	--	M	AVX1
*49470Q02336%E#	33	500	K,M	BQ	6	N,L,M,J,K	0.660	--	M	AVX1
*49470Q02396%E#	39	500	K,M	BQ	6	N,L,M,J,K	0.800	--	M	AVX1

MIL-PRF-49470/3 (PS03 Style), CAPACITORS

Fixed, Ceramic Dielectric, Switch Mode Power Supply

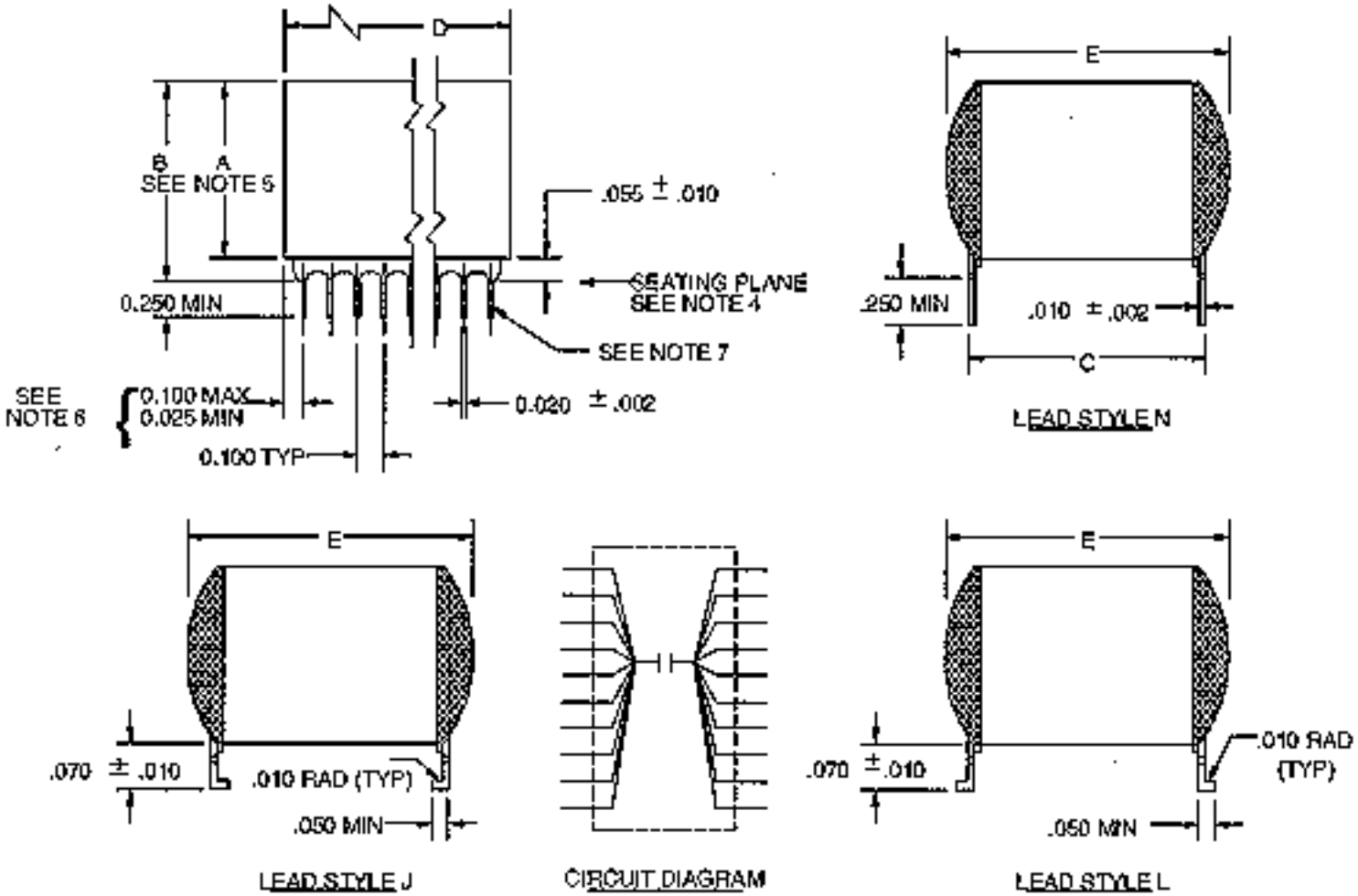

Physical Dimensions Table

Case Code	C +/-0.025	D (Min)	D (Max)	E (Max)	Number of Pins per Side
1	0.450	1.950	2.085	0.510	20
2	0.800	1.450	1.545	0.880	15
3	0.450	0.950	1.085	0.510	10
4	0.400	0.350	0.435	0.450	4
5	0.250	0.224	0.285	0.310	3
6	1.250	1.950	2.085	1.360	20

Notes:

1) Dimensions are in inches.

2) Metric equivalents are given for general information only.

3) Unless otherwise specified, tolerances are +/-0.010 inches.

4) Lead frame configuration is shown as typical above the seating plane.

5) See the part list table for specific A dimension.The A dimension is the off board height. For the straight or N style leads, A is from the top of the unit to the bottom of the lead standoff. For the formed or L and J style leads, A is from the top of the unit to the bottom of the lead.

6) For case code 5, dimenstions shall be 0.100 inches maximum and 0.012 inches minimum.

7) Lead alignment within pin rows shall be within +/-0.005 inches.

MIL-PRF-49470/4 (PS04 Style), CAPACITORS

Fixed, Ceramic Dielectric, Switch Mode Power Supply

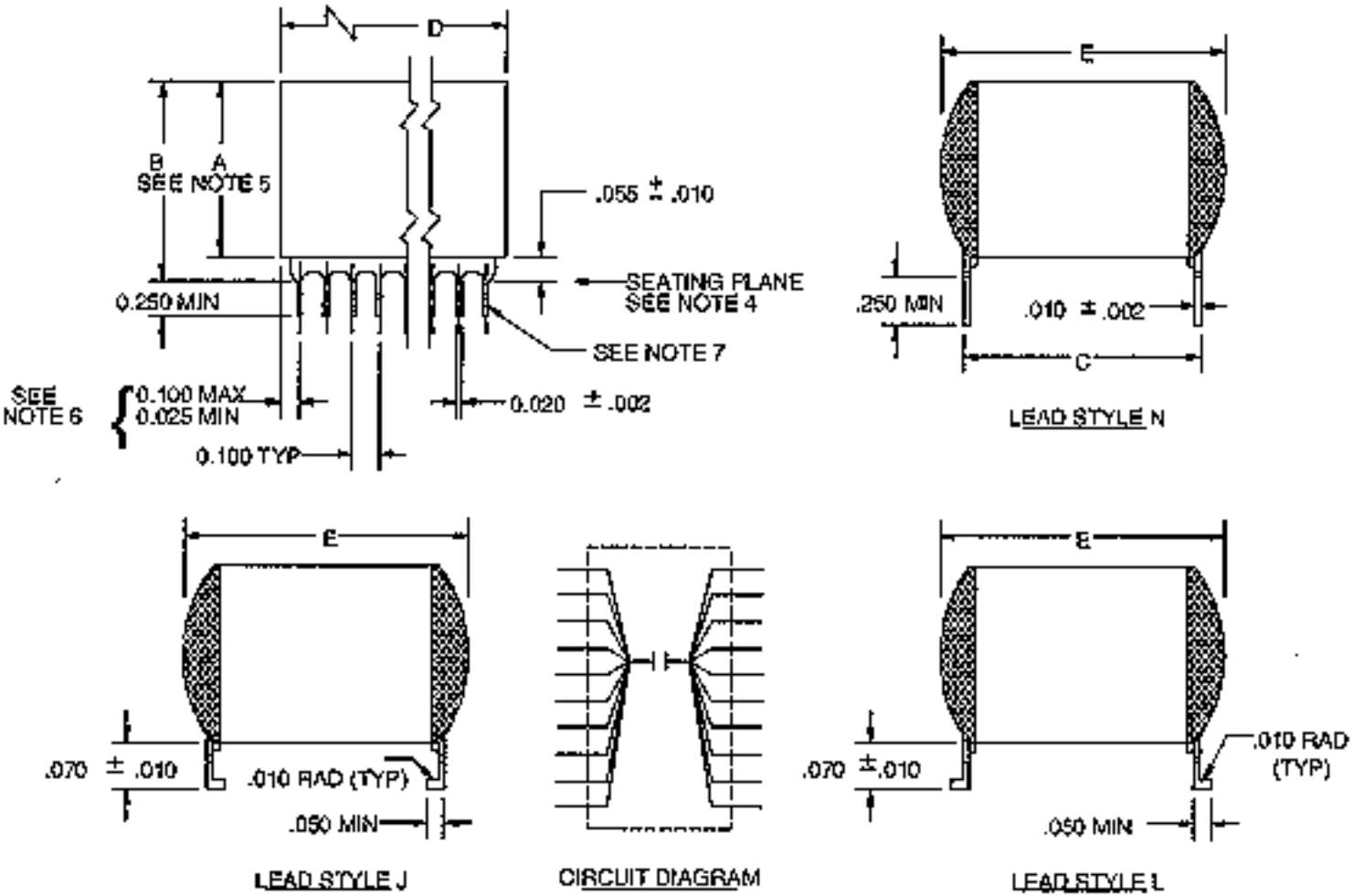

Physical Dimensions Table

Case Code	C +/-0.025	D (Min)	D (Max)	E (Max)	Number of Pins per Side
1	0.450	1.950	2.075	0.500	20
2	0.800	1.450	1.535	0.870	15
3	0.450	0.950	1.075	0.500	10

4	0.400	0.350	0.425	0.440	4
5	0.250	0.224	0.275	0.300	3
6	1.250	1.950	2.075	1.350	20

Notes:

1) Dimensions are in inches.

2) Metric equivalents are given for general information only.

3) Unless otherwise specified, tolerances are +/-0.010 inches.

4) Lead frame configuration is shown as typical above the seating plane.

5) See the part list table for specific maximum A dimension. For maximum B dimension, add 0.065 inches to the appropriate A dimension. For all lead styles, the number of chips is determined by the capacitance and voltage rating.

6) For case code 5, dimenstions shall be 0.100 inches maximum and 0.012 inches minimum.

7) Lead alignment within pin rows shall be within +/-0.005 inches.

MIL-PRF-49470/5 (PS05 Style), CAPACITORS

Fixed, Ceramic Dielectric, Switch Mode Power Supply

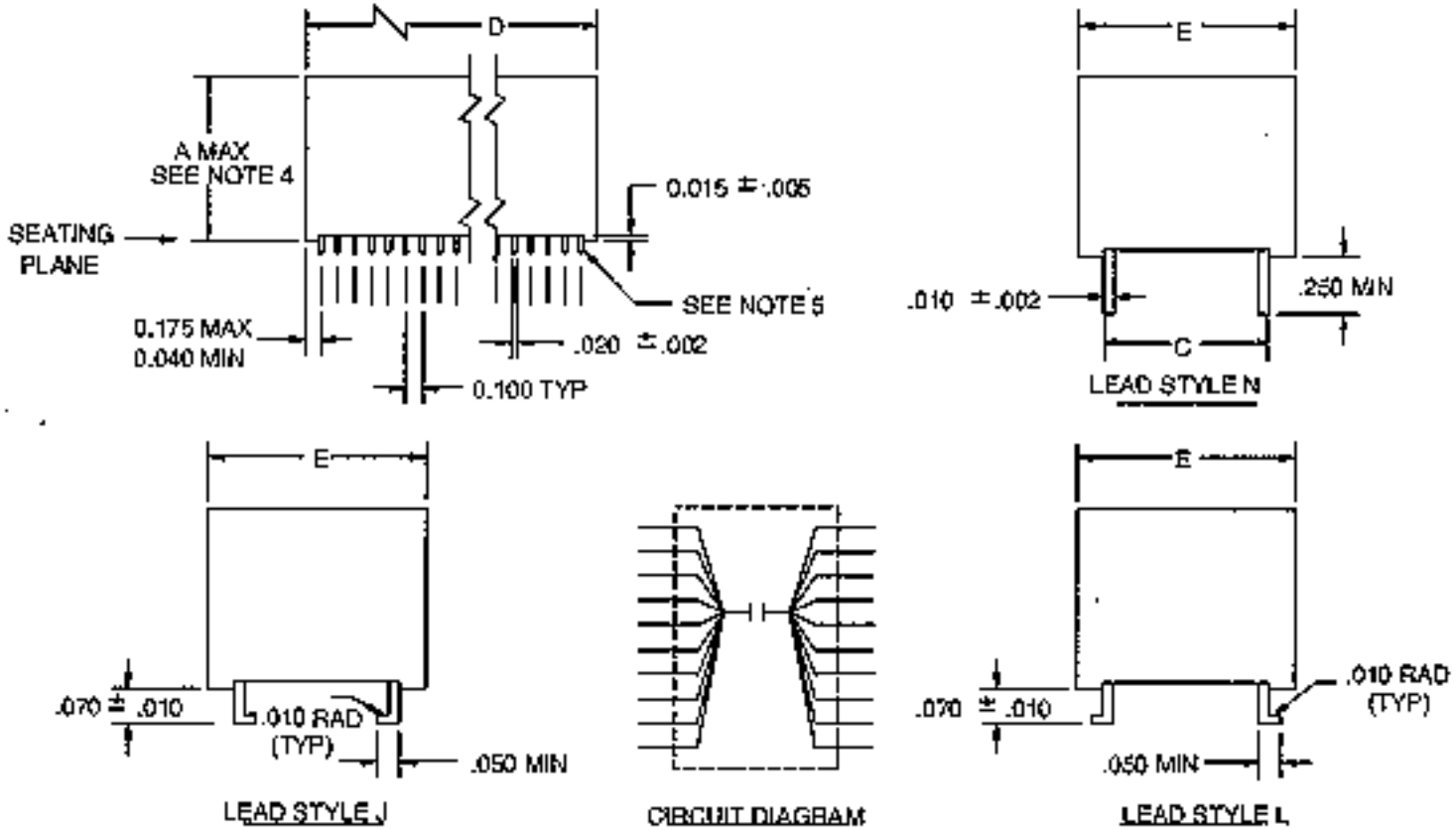

Physical Dimensions Table

Case Code	C +/-0.025	D (Min)	D (Max)	E (Max)	Number of Pins per Side
1	0.450	1.950	2.075	0.510	20
2	0.800	1.450	1.535	0.880	15
3	0.450	0.950	1.075	0.510	10
4	0.400	0.350	0.425	0.450	4
5	0.250	0.224	0.275	0.310	3
6	1.250	1.950	2.075	1.360	20

Notes:

1) Dimensions are in inches.

2) Metric equivalents are given for general information only.

3) Unless otherwise specified, tolerances are +/-0.010 inches.

4) See the part list table for specific maximum A dimension. For all lead styles, the number of chips is determined by the capacitance and voltage rating.

5) Lead alignment within pin rows shall be within +/-0.005 inches.

MIL-PRF-49470/6 (PS06 Style), CAPACITORS

Fixed, Ceramic Dielectric, Switch Mode Power Supply

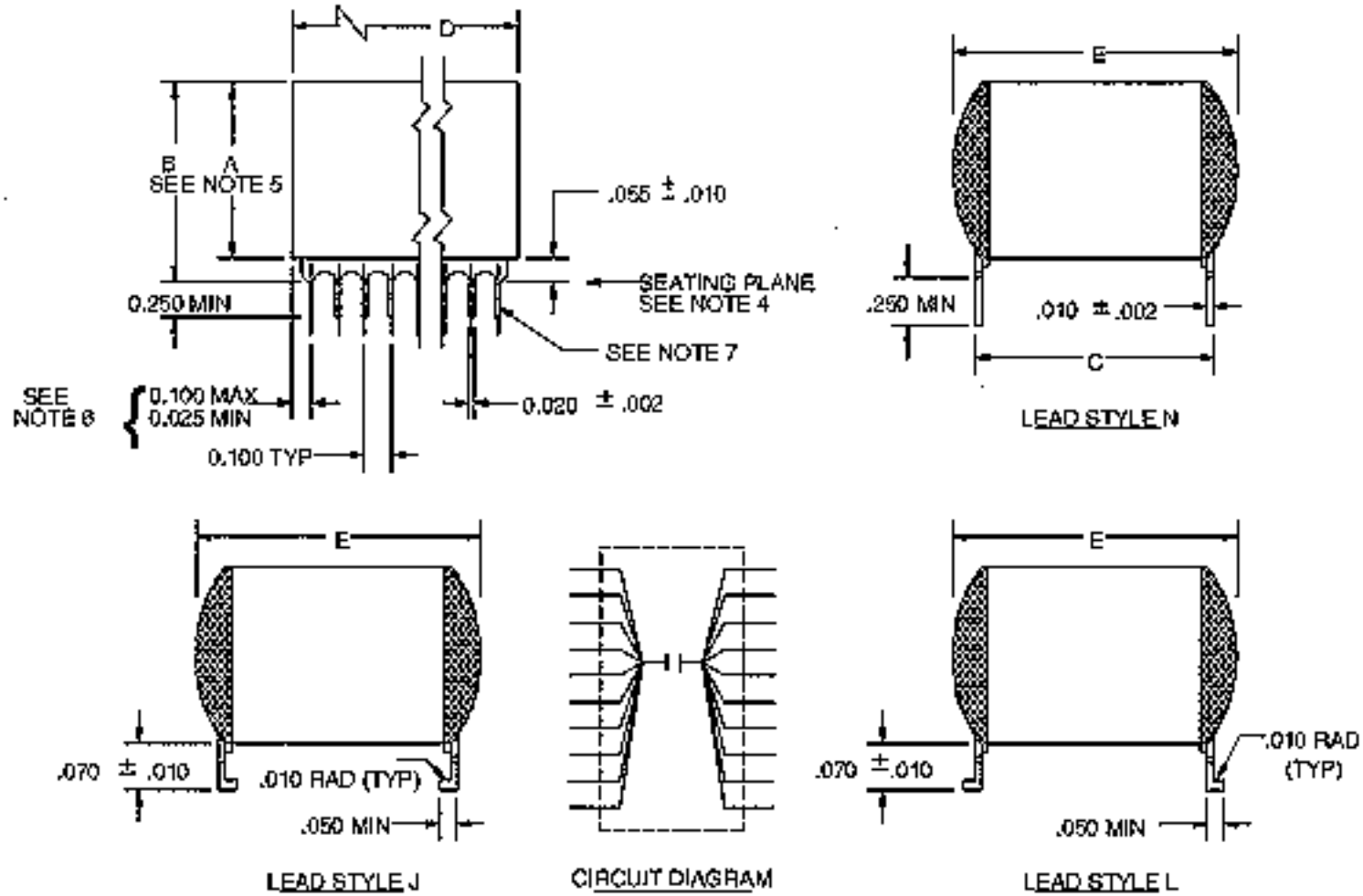

Physical Dimensions Table

Case Code	C +/-0.025	D (Min)	D (Max)	E (Max)	Number of Pins per Side
1	0.450	1.950	2.085	0.510	20
2	0.800	1.450	1.545	0.880	15
3	0.450	0.950	1.085	0.510	10

4	0.400	0.350	0.435	0.450	4
5	0.250	0.224	0.285	0.310	3
6	1.250	1.950	2.085	1.360	20

Notes:

1) Dimensions are in inches.

2) Metric equivalents are given for general information only.

3) Unless otherwise specified, tolerances are +/-0.010 inches.

4) Lead frame configuration is shown as typical above the seating frame.

5) See the part list table for specific A dimension. For straight or N style leads, A is from the top of the unit to the bottom of the lead standoff. For the formed or L and J styles leads, A is from the top of the unit to the bottom or the lead.

6) For case code 5, dimensions shall be 0.100 inches maximum and 0.012 inches minimum.

7) Lead alignment within pin rows shall be within +/-0.005 inches.

Go to -

NEPP

|

NPSL

|

Capacitors

MIL-PRF-55681, CAPACITORS

Chip, Multiple Layer, Fixed, Unencapsulated, Ceramic Dielectric, Established Reliability

CDR Styles

Part Number/Ordering Explanation

Important! Application Notes

Revision History for MIL-PRF-55681 Listing in the NPSL

Last Updated: 02/11/04

Click on the link below to see the associated parts selection listing:

Style	Detail Specification	Description (Physical Dimensions)	Available Capacitance Range (Voltage)
CDR01	MIL-PRF-55681/1	Chip (0805)	10 pF to 3,300 pF (100 V) 3,900 pF to 4,700 pF (50 V)
CDR02	MIL-PRF-55681/1	NOT RECOMMENDED FOR USE	
CDR03	MIL-PRF-55681/1	Chip (1808)	330 pF to 33,000 pF (100 V) 3,900 pF to 68,000 pF (50 V)
CDR04	MIL-PRF-55681/1	Chip (1812)	1,200 pF to 56,000 pF (100 V) 82,000 pF to 180,000 pF (50 V)
CDR05	MIL-PRF-55681/2	Chip (1825)	3,900 pF to 150,000 pF (100 V) 220,000 pF to 330,000 pF (50 V)
CDR06	MIL-PRF-55681/3	Chip (2225)	6,800 pF to 10,000 pF (100 V)
CDR11	MIL-PRF-55681/4	Chip, High Frequency (0505)	0.1 pF to 1,000 pF (50 V) Warning! See NASA Parts Advisory NA-048
CDR12	MIL-PRF-55681/4	Chip, High Frequency (0505)	0.1 pF to 1,000 pF (50 V) Warning! See NASA Parts Advisory NA-048
CDR13	MIL-PRF-55681/4	Chip, High Frequency (1111)	0.1 pF to 100 pF (500 V), 110 pF to 200 pF (300 V), 220 pF to 470 pF (200 V), 510 pF to 620 pF (100 V), 680 pF to 5,100 pF (50 V); Warning! S
CDR14	MIL-PRF-55681/4	Chip, High Frequency (1111)	0.1 pF to 100 pF (500 V), 110 pF to 200 pF (300 V), 220 pF to 470 pF (200 V), 510 pF to 620 pF (100 V), 680 pF to 5,100 pF (50 V); Warning!
CDR31	MIL-PRF-55681/7	Metric Chip (2.0 mm x 1.25 mm)	1 pF to 4,700 pF (100 V) 510 pF to 18,000 pF (50 V)
CDR32	MIL-PRF-55681/8	Metric Chip (3.2 mm x 1.6 mm)	1 pF to 15,000 pF (100 V), 1,100 pF to 39,000 pF (50 V)
CDR33	MIL-PRF-55681/9	Metric Chip (3.2 mm x 2.5 mm)	1,000 pF to 27,000 pF (100 V), 2,400 pF to 100,000 pF (50 V)
CDR34	MIL-PRF-55681/10	Metric Chip (4.5 mm x 3.2 mm)	2,200 pF to 56,000 pF (100 V) 5,100 pF to 180,000 pF (50 V)
CDR35	MIL-PRF-55681/11	Metric Chip (4.5 mm x 6.4 mm)	4,700 pF to 150,000 pF (100 V) 11,000 pF to 470,000 pF (50 V)

APPLICATION NOTES FOR MIL-PRF-55681

1) MIL-PRF-123 capacitors are space grade and are recommended for all Level 1 applications.

2) As an alternative to MIL-PRF-123, for Level 1 applications at >= 10 Vdc, MIL-PRF-20, MIL-PRF-39014, or MIL-PRF-55681 capacitors can be used in accordance with the type, value and failure rate guidelines shown in the tables.

3) As an alternative to MIL-PRF-123, for Level 1 low voltage applications (< 10 Vdc), MIL-PRF-20, MIL-PRF-39014, or MIL-PRF-55681 capacitors can be used, if capacitor rated voltage is at least 100 Vdc and flight lots are subjected to lot sample testing per Group B Subgroup 2 of MIL-PRF-123 (Humidity, Steady-State, Low Voltage). These recommendations stem from concerns about the low voltage failure mechanism which has been observed to occur in multilayer ceramic capacitors. In low voltage applications, multilayer ceramic capacitors with thin dielectrics and/or large voids, delaminations, inclusions, microcracks and other defects, may develop low and unstable insulation resistances.

4) For Level 2 applications at >=10 Vdc, capacitors can be used in accordance with the type, value and failure rate guidelines shown in the tables.

5) For Level 2 low voltage applications (< 10 Vdc), capacitor rated voltage should be at least 100 Vdc. Alternatively, parts rated at less than 100 Vdc can be used if flight lots are subjected to lot sample testing per Group B Subgroup 2 of MIL-PRF-123 (Humidity, Steady-State, Low Voltage). These recommendations are prompted by low voltage failure concerns (see note 3).

6) The CDR02 ceramic chip capacitors are intentionally NOT listed in the NASA Parts Selection List. This particular chip, which is offered in MIL-PRF-55681/1, has a large length to width ratio (0.18" x 0.05") which makes this chip highly susceptible to cracking as a result of board flexing.

7) The use of ceramic chip capacitors with Termination Style "W" or "Y" is

NOT recommended

. Termination style "Y" is

pure tin

and termination style "W" gives the manufacturer the option to use either pure tin or a tin-lead alloy as a termination finish. Pure tin finishes are susceptible to the growth of tin whiskers which are capable of bridging electrically isolated surfaces. See the

NPSL Prohibited Materials Section

and associated references for a description of tin whiskers and the hazards they may present.

Revision History for MIL-PRF-55681 Listing in the NPSL

02/11/04	Fixed typo in part numbers for CDR01 listing. The two 50 V parts listed had an incorrect voltage rating identifier.
11/06/03	Updated Application Notesto more explicitly indicate that termination type "Y" (pure tin) and "W" (can be pure tin at supplier discretion) are NOT RECOMMENDED due to possible tin whisker hazard.
02/29/00	Added Link to NASA Parts Advisory NA-048 for ATC "BG" characteristic ceramic chip capacitors made in accordance with MIL-PRF-55681/4
10/13/98	Removed Termination "W" from list of options. This option allows the use of pure tin. Added application note to warn of the risks of tin whisker formation resulting from the use of "pure tin" finishe
05/21/98	Added column to the "styles" page to show the available capacitance range and rated voltages for quick reference.
02/25/98	Corrected the physical dimensions table for CDR31 and the dimension tolerances for CDR14.
02/25/98	Added an application note explaining why CDR02 parts are NOT included in the NPSL for spaceflight applications.
02/25/98	Removed CDR26 through CDR30 from the physical dimensions table because these high voltage chips are NOT available from any qualified sources. Also removed CDR02 from the dimensions table since this is
11/28/97	Made changes indicating the specification conversion to a performance specification (MIL-PRF-55681 instead of MIL-C-55681).
11/28/97	Added a table which specifies the physical dimensions of the various chip styles.
11/28/97	Added additional application note clarification with respect to the low voltage application of these capacitors.
05/01/97	Initial Release of MIL-C-55681 Section in the NPSL

Part Number Ordering Information, example and explanation:

CDR01BX100AKSR where,

CDR	01	B
Style (multiple layer, fixed, unencapsulated, ceramic dielectric, established reliability, chip capacitors conforming to MIL-PRF-55681)	Shape and Dimensions of the capacitor	Rated Temp. Range of -55deg.C to

Part number ordering options are developed using the following criteria:

Style	Detail Specification
CDR01	MIL-PRF-55681/1
CDR03	MIL-PRF-55681/1
CDR04	MIL-PRF-55681/1
CDR05	MIL-PRF-55681/2
CDR06	MIL-PRF-55681/3
CDR11	MIL-PRF-55681/4
CDR12	MIL-PRF-55681/4
CDR13	MIL-PRF-55681/4
CDR14	MIL-PRF-55681/4
CDR31	MIL-PRF-55681/7
CDR32	MIL-PRF-55681/8
CDR33	MIL-PRF-55681/9
CDR34	MIL-PRF-55681/10
CDR35	MIL-PRF-55681/11

Volt./Temp. Limits
BG = 90 +/- 20 ppm/deg.C
BP = 0 +/- 30 ppm/deg.C
BX = +/- 15%

Rated Voltage
A = 50 Vdc
B = 100 Vdc
C = 200 Vdc
D= 300 Vdc
E = 500 Vdc

Capacitance Tolerance
B = +/- 0.10 pF
C = +/- 0.25 pF
D = +/- 0.50 pF
F = +/- 1 %
G = +/- 2 %
J = +/- 5 %
K = +/- 10 %
M = +/- 20 %

Termination Finish
S = Solder-coated, final
M = Palladium-Silver
N = Silver-Nickel-Gold
U = Base Metallization-Barrier, Metal-Solder Coated
W = Base Metallization-Barrier, Metal-Tinned (Tin or Tin/Lead Alloy) (NOT RECOMMENDED FOR SPACE FLIGHT USE. SEE APPLICATION NOTE)
Y = Base Metallization Barrier 100% Tin (NOT RECOMMENDED FOR SPACE FLIGHT USE. SEE APPLICATION NOTE)

Failure Rate Levels
M = 1.0%/1000 hrs (Level 3)
P = 0.1%/1000 hrs (Level 2)
R = 0.01%/1000 hrs (Level 2)
S = 0.001%/1000 hrs (Level 1)

Capacitor Values:

Capacitance values in picofarads (pF) are contained in the following listing. When ordering, the first two digits represent significant figures and the last digit specifies the number of zeroes to follow. For example 101 indicates 100 pF and 102 indicates 1000 pF. The letter "R" shall be used to indicate a decimal point when required. For example 1R0 indicates 1.0 pF; R75 indicates 0.75 pF.

CDR01 Ceramic Chip Capacitors

	Cap.	Rated	Cap.	Termination	Level 1	Level 2	

Part Number	Value (pF)	Voltage (V)	Tol (+/-%)	Finish (@)	(FRL)(#)	(FRL)(#)	Manufacturer
CDR01BP100B%@#	10	100	J, K	S, M, N, U	S	P, R	AVX, KEM, PRE, VIT
CDR01BP120B%@#	12	100	J	S, M, N, U	S	P, R	AVX, KEM, PRE, VIT
CDR01BP150B%@#	15	100	J, K	S, M, N, U	S	P, R	AVX, KEM, PRE, VIT
CDR01BP180B%@#	18	100	J	S, M, N, U	S	P, R	AVX, KEM, PRE, VIT
CDR01BP220B%@#	22	100	J, K	S, M, N, U	S	P, R	AVX, KEM, PRE, VIT
CDR01BP270B%@#	27	100	J	S, M, N, U	S	P, R	AVX, KEM, PRE, VIT
CDR01BP330B%@#	33	100	J, K	S, M, N, U	S	P, R	AVX, KEM, PRE, VIT
CDR01BP390B%@#	39	100	J	S, M, N, U	S	P, R	AVX, KEM, PRE, VIT
	Cap.	Rated	Cap.	Termination	Level 1	Level 2	
Part Number	Value (pF)	Voltage (V)	Tol (+/-%)	Finish (@)	(FRL)(#)	(FRL)(#)	Manufacturer
CDR01BP470B%@#	47	100	J, K	S, M, N, U	S	P, R	AVX, KEM, PRE, VIT
CDR01BP560B%@#	56	100	J	S, M, N, U	S	P, R	AVX, KEM, PRE, VIT
CDR01BP680B%@#	68	100	J, K	S, M, N, U	S	P, R	AVX, KEM, PRE, VIT
CDR01BP820B%@#	82	100	J	S, M, N, U	S	P, R	AVX, KEM, PRE, VIT
CDR01BP101B%@#	100	100	J, K	S, M, N, U	S	P, R	AVX, KEM, PRE, VIT
CDR01BP121B%@#	120	100	J, K	S, M, N, U	S	P, R	AVX, KEM, PRE, VIT
CDR01BX121B%@#	120	100	J, K	S, M, N, U	S	P, R	AVX, KEM, PRE, VIT
CDR01BP151B%@#	150	100	J, K	S, M, N, U	S	P, R	AVX, KEM, PRE, VIT
CDR01BX151B%@#	150	100	J, K	S, M, N, U	S	P, R	AVX, KEM, PRE, VIT
CDR01BP181B%@#	180	100	J, K	S, M, N, U	S	P, R	AVX, KEM, PRE, VIT
	Cap.	Rated	Cap.	Termination	Level 1	Level 2	
Part Number	Value (pF)	Voltage (V)	Tol (+/-%)	Finish (@)	(FRL)(#)	(FRL)(#)	Manufacturer
CDR01BX181B%@#	180	100	J, K	S, M, N, U	S	P, R	AVX, KEM, PRE, VIT
CDR01BX221B%@#	220	100	J, K	S, M, N, U	S	P, R	AVX, KEM, PRE, VIT
CDR01BX271B%@#	270	100	J	S, M, N, U	S	P, R	AVX, KEM, PRE, VIT
CDR01BX331B%@#	330	100	K, M	S, M, N, U	S	P, R	AVX, KEM, PRE, VIT
CDR01BX391B%@#	390	100	K	S, M, N, U	S	P, R	AVX, KEM, PRE, VIT
CDR01BX471B%@#	470	100	K, M	S, M, N, U	S	P, R	AVX, KEM, PRE, VIT
CDR01BX561B%@#	560	100	K	S, M, N, U	S	P, R	AVX, KEM, PRE, VIT
CDR01BX681B%@#	680	100	K, M	S, M, N, U	S	P, R	AVX, KEM, PRE, VIT
	Cap.	Rated	Cap.	Termination	Level 1	Level 2	
Part Number	Value (pF)	Voltage (V)	Tol (+/-%)	Finish (@)	(FRL)(#)	(FRL)(#)	Manufacturer
CDR01BX821B%@#	820	100	K	S, M, N, U	S	P, R	AVX, KEM, PRE, VIT
CDR01BX102B%@#	1000	100	K, M	S, M, N, U	S	P, R	AVX, KEM, PRE, VIT
CDR01BX122B%@#	1200	100	K	S, M, N, U	S	P, R	AVX, KEM, PRE, VIT
CDR01BX152B%@#	1500	100	K, M	S, M, N, U	S	P, R	AVX, KEM, PRE, VIT
CDR01BX182B%@#	1800	100	K	S, M, N, U	S	P, R	AVX, KEM, PRE, VIT
CDR01BX222B%@#	2200	100	K, M	S, M, N, U	S	P, R	AVX, KEM, PRE, VIT
CDR01BX272B%@#	2700	100	K	S, M, N, U	S	P, R	AVX, KEM, PRE, VIT
CDR01BX332B%@#	3300	100	K, M	S, M, N, U	S	P, R	AVX, KEM, PRE, VIT
CDR01BX392A%@#	3900	50	K	S, M, N, U	S	P, R	AVX, KEM, PRE, VIT
CDR01BX472A%@#	4700	50	K, M	S, M, N, U	S	P, R	AVX, KEM, PRE, VIT
	Cap.	Rated	Cap.	Termination	Level 1	Level 2	
Part Number	Value (pF)	Voltage (V)	Tol (+/-%)	Finish (@)	(FRL)(#)	(FRL)(#)	Manufacturer

CDR03 Ceramic Chip Capacitors

	Cap.	Rated	Cap.	Termination	Level 1	Level 2	
Part Number	Value (pF)	Voltage (V)	Tol (+/-%)	Finish (@)	(FRL)(#)	(FRL)(#)	Manufacturer
CDR03BP331B%@#	330	100	J, K	S, M, N, U	S	P, R	AVX, KEM, PRE, VIT
CDR03BP391B%@#	390	100	J	S, M, N, U	S	P, R	AVX, KEM, PRE, VIT
CDR03BP471B%@#	470	100	J, K	S, M, N, U	S	P, R	AVX, KEM, PRE, VIT
CDR03BP561B%@#	560	100	J	S, M, N, U	S	P, R	AVX, KEM, PRE, VIT
CDR03BP681B%@#	680	100	J, K	S, M, N, U	S	P, R	AVX, KEM, PRE, VIT
CDR03BP821B%@#	820	100	J	S, M, N, U	S	P, R	AVX, KEM, PRE, VIT
CDR03BP102B%@#	1000	100	J, K	S, M, N, U	S	P, R	AVX, KEM, PRE, VIT
	Cap.	Rated	Cap.	Termination	Level 1	Level 2	
Part Number	Value (pF)	Voltage (V)	Tol (+/-%)	Finish (@)	(FRL)(#)	(FRL)(#)	Manufacturer
CDR03BX123B%@#	12000	100	K	S, M, N, U	S	P, R	AVX, KEM, PRE, VIT
CDR03BX153B%@#	15000	100	K, M	S, M, N, U	S	P, R	AVX, KEM, PRE, VIT
CDR03BX183B%@#	18000	100	K	S, M, N, U	S	P, R	AVX, KEM, PRE, VIT
CDR03BX223B%@#	22000	100	K, M	S, M, N, U	S	P, R	AVX, KEM, PRE, VIT
CDR03BX273B%@#	27000	100	K	S, M, N, U	S	P, R	AVX, KEM, PRE, VIT
CDR03BX333B%@#	33000	100	K, M	S, M, N, U	S	P, R	AVX, KEM, PRE, VIT
CDR03BX393A%@#	39000	50	K	S, M, N, U	S	P, R	AVX, KEM, PRE, VIT
CDR03BX473A%@#	47000	50	K, M	S, M, N, U	S	P, R	AVX, KEM, PRE, VIT
CDR03BX563A%@#	56000	50	K	S, M, N, U	S	P, R	AVX, KEM, PRE, VIT
CDR03BX683A%@#	68000	50	K, M	S, M, N, U	S	P, R	AVX, KEM, PRE, VIT
	Cap.	Rated	Cap.	Termination	Level 1	Level 2	
Part Number	Value (pF)	Voltage (V)	Tol (+/-%)	Finish (@)	(FRL)(#)	(FRL)(#)	Manufacturer

CDR04 Ceramic Chip Capacitors

	Cap.	Rated	Cap.	Termination	Level 1	Level 2	
Part Number	Value (pF)	Voltage (V)	Tol (+/-%)	Finish (@)	(FRL)(#)	(FRL)(#)	Manufacturer
CDR04BP122B%@#	1200	100	J	S, M, N, U	S	P, R	AVX, KEM, VIT
CDR04BP152B%@#	1500	100	J, K	S, M, N, U	S	P, R	AVX, KEM, VIT
CDR04BP182B%@#	1800	100	J	S, M, N, U	S	P, R	AVX, KEM, VIT
CDR04BP222B%@#	2200	100	J, K	S, M, N, U	S	P, R	AVX, KEM, VIT
CDR04BP272B%@#	2700	100	J	S, M, N, U	S	P, R	AVX, KEM, VIT
CDR04BP332B%@#	3300	100	J, K	S, M, N, U	S	P, R	AVX, KEM, VIT
CDR04BX393B%@#	39000	100	K	S, M, N, U	S	P, R	AVX, KEM, VIT
CDR04BX473B%@#	47000	100	K, N	S, M, N, U	S	P, R	AVX, KEM, VIT
CDR04BX563B%@#	56000	100	K	S, M, N, U	S	P, R	AVX, KEM, VIT
CDR04BX823A%@#	82000	50	K	S, M, N, U	S	P, R	AVX, KEM, VIT
CDR04BX104A%@#	100000	50	K, M	S, M, N, U	S	P, R	AVX, KEM, VIT
CDR04BX124A%@#	120000	50	K	S, M, N, U	S	P, R	AVX, KEM, VIT
CDR04BX154A%@#	150000	50	K, M	S, M, N, U	S	P, R	AVX, KEM, VIT
CDR04BX184A%@#	180000	50	K	S, M, N, U	S	P, R	AVX, KEM, VIT
	Cap.	Rated	Cap.	Termination	Level 1	Level 2	

Part Number	Value (pF)	Voltage (V)	Tol (+/-%)	Finish (@)	(FRL)(#)	(FRL)(#)	Manufacturer

CDR05 Ceramic Chip Capacitors

	Cap.	Rated	Cap.	Termination	Level 1	Level 2	
Part Number	Value (pF)	Voltage (V)	Tol (+/-%)	Finish (@)	(FRL)(#)	(FRL)(#)	Manufacturer
CDR05BP392B%@#	3900	100	J, K	S, M, N, U	S	P, R	AVX, KEM
CDR05BP472B%@#	4700	100	J, K	S, M, N, U	S	P, R	AVX, KEM
CDR05BP562B%@#	5600	100	J, K	S, M, N, U	S	P, R	AVX, KEM
CDR05BX683B%@#	68000	100	K, M	S, M, N, U	S	P, R	AVX, KEM
CDR05BX823B%@#	82000	100	K	S, M, N, U	S	P, R	AVX, KEM
CDR05BX104B%@#	100000	100	K, M	S, M, N, U	S	P, R	AVX, KEM
CDR05BX124B%@#	120000	100	K	S, M, N, U	S	P, R	AVX, KEM
CDR05BX154B%@#	150000	100	K, M	S, M, N, U	S	P, R	AVX, KEM
CDR05BX224A%@#	220000	50	K, M	S, M, N, U	S	P, R	AVX, KEM
CDR05BX274AK@#	270000	50	K	S, M, N, U	S	P, R	AVX, KEM
CDR05BX334A%@#	330000	50	K, M	S, M, N, U	S	P, R	AVX, KEM
	Cap.	Rated	Cap.	Termination	Level 1	Level 2	
Part Number	Value (pF)	Voltage (V)	Tol (+/-%)	Finish (@)	(FRL)(#)	(FRL)(#)	Manufacturer

CDR06 Ceramic Chip Capacitors

	Cap.	Rated	Cap.	Termination	Level 1	Level 2	
Part Number	Value (pF)	Voltage (V)	Tol (+/-%)	Finish (@)	(FRL)(#)	(FRL)(#)	Manufacturer
CDR06BP682B%@#	6800	100	J, K	S, M, N, U	S	P, R	AVX, KEM, VIT
CDR06BP822B%@#	8200	100	J, K	S, M, N, U	S	P, R	AVX, KEM, VIT
CDR06BP103B%@#	10000	100	J, K	S, M, N, U	S	P, R	AVX, KEM, VIT

CDR11 Ceramic Chip Capacitors

	Cap.	Rated	Temp.	Cap.	Termination	Level 1	Level 2	
Part Number	Value (pF)	Voltage (V)	Limits (*)	Tol. (+/-%)	Finish (@)	(FRL)(#)	(FRL)(#)	Manufacturer
CDR11B*0R1A%@#	0.1	50	P, G	B	M, N	S	P, R	AVX, ATC
CDR11B*0R2A%@#	0.2	50	P, G	B	M, N	S	P, R	AVX, ATC
CDR11B*0R3A%@#	0.3	50	P, G	B, C	M, N	S	P, R	AVX, ATC
CDR11B*0R4A%@#	0.4	50	P, G	B, C	M, N	S	P, R	AVX, ATC
CDR11B*0R5A%@#	0.5	50	P, G	B, C, D	M, N	S	P, R	AVX, ATC
CDR11B*0R6A%@#	0.6	50	P, G	B, C, D	M, N	S	P, R	AVX, ATC
CDR11B*0R7A%@#	0.7	50	P, G	B, C, D	M, N	S	P, R	AVX, ATC
CDR11B*0R8A%@#	0.8	50	P, G	B, C, D	M, N	S	P, R	AVX, ATC
CDR11B*0R9A%@#	0.9	50	P, G	B, C, D	M, N	S	P, R	AVX, ATC
CDR11B*1R0A%@#	1.0	50	P, G	B, C, D	M, N	S	P, R	AVX, ATC

	Cap.	Rated	Temp.	Cap.	Termination	Level 1	Level 2	
Part Number	Value (pF)	Voltage (V)	Limits (*)	Tol. (+/-%)	Finish (@)	(FRL)(#)	(FRL)(#)	Manufacturer
CDR11B*1R1A%@#	1.1	50	P, G	B, C, D	M, N	S	P, R	AVX, ATC
CDR11B*1R2A%@#	1.2	50	P, G	B, C, D	M, N	S	P, R	AVX, ATC
CDR11B*1R3A%@#	1.3	50	P, G	B, C, D	M, N	S	P, R	AVX, ATC
CDR11B*1R4A%@#	1.4	50	P, G	B, C, D	M, N	S	P, R	AVX, ATC
CDR11B*1R5A%@#	1.5	50	P, G	B, C, D	M, N	S	P, R	AVX, ATC
CDR11B*1R6A%@#	1.6	50	P, G	B, C, D	M, N	S	P, R	AVX, ATC
CDR11B*1R7A%@#	1.7	50	P, G	B, C, D	M, N	S	P, R	AVX, ATC
CDR11B*1R8A%@#	1.8	50	P, G	B, C, D	M, N	S	P, R	AVX, ATC
CDR11B*1R9A%@#	1.9	50	P, G	B, C, D	M, N	S	P, R	AVX, ATC
	Cap.	Rated	Temp.	Cap.	Termination	Level 1	Level 2	
Part Number	Value (pF)	Voltage (V)	Limits (*)	Tol. (+/-%)	Finish (@)	(FRL)(#)	(FRL)(#)	Manufacturer
CDR11B*2R0A%@#	2.0	50	P, G	B, C, D	M, N	S	P, R	AVX, ATC
CDR11B*2R1A%@#	2.1	50	P, G	B, C, D	M, N	S	P, R	AVX, ATC
CDR11B*2R2A%@#	2.2	50	P, G	B, C, D	M, N	S	P, R	AVX, ATC
CDR11B*2R4A%@#	2.4	50	P, G	B, C, D	M, N	S	P, R	AVX, ATC
CDR11B*2R7A%@#	2.7	50	P, G	B, C, D	M, N	S	P, R	AVX, ATC
CDR11B*3R0A%@#	3.0	50	P, G	B, C, D	M, N	S	P, R	AVX, ATC
CDR11B*3R3A%@#	3.3	50	P, G	B, C, D	M, N	S	P, R	AVX, ATC
CDR11B*3R6A%@#	3.6	50	P, G	B, C, D	M, N	S	P, R	AVX, ATC
CDR11B*3R9A%@#	3.9	50	P, G	B, C, D	M, N	S	P, R	AVX, ATC
	Cap.	Rated	Temp.	Cap.	Termination	Level 1	Level 2	
Part Number	Value (pF)	Voltage (V)	Limits (*)	Tol. (+/-%)	Finish (@)	(FRL)(#)	(FRL)(#)	Manufacturer
CDR11B*4R3A%@#	4.3	50	P, G	B, C, D	M, N	S	P, R	AVX, ATC
CDR11B*4R7A%@#	4.7	50	P, G	B, C, D	M, N	S	P, R	AVX, ATC
CDR11B*5R1A%@#	5.1	50	P, G	B, C, D	M, N	S	P, R	AVX, ATC
CDR11B*5R6A%@#	5.6	50	P, G	B, C, D	M, N	S	P, R	AVX, ATC
CDR11B*6R2A%@#	6.2	50	P, G	B, C, D	M, N	S	P, R	AVX, ATC
CDR11B*6R8A%@#	6.8	50	P, G	B, C, J, K, M	M, N	S	P, R	AVX, ATC
CDR11B*7R5A%@#	7.5	50	P, G	B, C, J, K, M	M, N	S	P, R	AVX, ATC
CDR11B*8R2A%@#	8.2	50	P, G	B, C, J, K, M	M, N	S	P, R	AVX, ATC
CDR11B*9R1A%@#	9.1	50	P, G	B, C, J, K, M	M, N	S	P, R	AVX, ATC
	Cap.	Rated	Temp.	Cap.	Termination	Level 1	Level 2	
Part Number	Value (pF)	Voltage (V)	Limits (*)	Tol. (+/-%)	Finish (@)	(FRL)(#)	(FRL)(#)	Manufacturer
CDR11B*100A%@#	10	50	P, G	F, G, J, K, M	M, N	S	P, R	AVX, ATC
CDR11B*110A%@#	11	50	P, G	F, G, J, K, M	M, N	S	P, R	AVX, ATC
CDR11B*120A%@#	12	50	P, G	F, G, J, K, M	M, N	S	P, R	AVX, ATC
CDR11B*130A%@#	13	50	P, G	F, G, J, K, M	M, N	S	P, R	AVX, ATC
CDR11B*150A%@#	15	50	P, G	F, G, J, K, M	M, N	S	P, R	AVX, ATC
CDR11B*160A%@#	16	50	P, G	F, G, J, K, M	M, N	S	P, R	AVX, ATC
CDR11B*180A%@#	18	50	P, G	F, G, J, K, M	M, N	S	P, R	AVX, ATC
CDR11B*200A%@#	20	50	P, G	F, G, J, K, M	M, N	S	P, R	AVX, ATC
CDR11B*220A%@#	22	50	P, G	F, G, J, K, M	M, N	S	P, R	AVX, ATC
	Cap.	Rated	Temp.	Cap.	Termination	Level 1	Level 2	
Part Number	Value (pF)	Voltage (V)	Limits (*)	Tol. (+/-%)	Finish (@)	(FRL)(#)	(FRL)(#)	Manufacturer
CDR11B*240A%@#	24	50	P, G	F, G, J, K, M	M, N	S	P, R	AVX, ATC

CDR11B*270A%@#	27	50	P, G	F, G, J, K, M	M, N	S	P, R	AVX, ATC
CDR11B*300A%@#	30	50	P, G	F, G, J, K, M	M, N	S	P, R	AVX, ATC
CDR11B*330A%@#	33	50	P, G	F, G, J, K, M	M, N	S	P, R	AVX, ATC
CDR11B*360A%@#	36	50	P, G	F, G, J, K, M	M, N	S	P, R	AVX, ATC
CDR11B*390A%@#	39	50	P, G	F, G, J, K, M	M, N	S	P, R	AVX, ATC
CDR11B*430A%@#	43	50	P, G	F, G, J, K, M	M, N	S	P, R	AVX, ATC
CDR11B*470A%@#	47	50	P, G	F, G, J, K, M	M, N	S	P, R	AVX, ATC
CDR11B*510A%@#	51	50	P, G	F, G, J, K, M	M, N	S	P, R	AVX, ATC
	Cap.	Rated	Temp.	Cap.	Termination	Level 1	Level 2	
Part Number	Value (pF)	Voltage (V)	Limits (*)	Tol. (+/-%)	Finish (@)	(FRL)(#)	(FRL)(#)	Manufacturer
CDR11B*560A%@#	56	50	P, G	F, G, J, K, M	M, N	S	P, R	AVX, ATC
CDR11B*620A%@#	62	50	P, G	F, G, J, K, M	M, N	S	P, R	AVX, ATC
CDR11B*680A%@#	68	50	P, G	F, G, J, K, M	M, N	S	P, R	AVX, ATC
CDR11B*750A%@#	75	50	P, G	F, G, J, K, M	M, N	S	P, R	AVX, ATC
CDR11B*820A%@#	82	50	P, G	F, G, J, K, M	M, N	S	P, R	AVX, ATC
CDR11B*910A%@#	91	50	P, G	F, G, J, K, M	M, N	S	P, R	AVX, ATC
CDR11B*101A%@#	100	50	P, G	F, G, J, K, M	M, N	S	P, R	AVX, ATC
CDR11BP111A%@#	110	50	P	F, G, J, K, M	M, N	S	P, R	AVX, ATC
CDR11BP121A%@#	120	50	P	F, G, J, K, M	M, N	S	P, R	AVX, ATC
	Cap.	Rated	Temp.	Cap.	Termination	Level 1	Level 2	
Part Number	Value (pF)	Voltage (V)	Limits (*)	Tol. (+/-%)	Finish (@)	(FRL)(#)	(FRL)(#)	Manufacturer
CDR11BP131A%@#	130	50	P	F, G, J, K, M	M, N	S	P, R	AVX, ATC
CDR11BP151A%@#	150	50	P	F, G, J, K, M	M, N	S	P, R	AVX, ATC
CDR11BP161A%@#	160	50	P	F, G, J, K, M	M, N	S	P, R	AVX, ATC
CDR11BP181A%@#	180	50	P	F, G, J, K, M	M, N	S	P, R	AVX, ATC
CDR11BP201A%@#	200	50	P	F, G, J, K, M	M, N	S	P, R	AVX, ATC
CDR11BP221A%@#	220	50	P	F, G, J, K, M	M, N	S	P, R	AVX, ATC
CDR11BP241A%@#	240	50	P	F, G, J, K, M	M, N	S	P, R	AVX, ATC
CDR11BP271A%@#	270	50	P	F, G, J, K, M	M, N	S	P, R	AVX, ATC
CDR11BP301A%@#	300	50	P	F, G, J, K, M	M, N	S	P, R	AVX, ATC
	Cap.	Rated	Temp.	Cap.	Termination	Level 1	Level 2	
Part Number	Value (pF)	Voltage (V)	Limits (*)	Tol. (+/-%)	Finish (@)	(FRL)(#)	(FRL)(#)	Manufacturer
CDR11BP331A%@#	330	50	P	F, G, J, K, M	M, N	S	P, R	AVX, ATC
CDR11BP361A%@#	360	50	P	F, G, J, K, M	M, N	S	P, R	AVX, ATC
CDR11BP391A%@#	390	50	P	F, G, J, K, M	M, N	S	P, R	AVX, ATC
CDR11BP431A%@#	430	50	P	F, G, J, K, M	M, N	S	P, R	AVX, ATC
CDR11BP471A%@#	470	50	P	F, G, J, K, M	M, N	S	P, R	AVX, ATC
CDR11BP511A%@#	510	50	P	F, G, J, K, M	M, N	S	P, R	AVX, ATC
CDR11BP561A%@#	560	50	P	F, G, J, K, M	M, N	S	P, R	AVX, ATC
CDR11BP621A%@#	620	50	P	F, G, J, K, M	M, N	S	P, R	AVX, ATC
CDR11BP681A%@#	680	50	P	F, G, J, K, M	M, N	S	P, R	AVX, ATC
	Cap.	Rated	Temp.	Cap.	Termination	Level 1	Level 2	
Part Number	Value (pF)	Voltage (V)	Limits (*)	Tol. (+/-%)	Finish (@)	(FRL)(#)	(FRL)(#)	Manufacturer
CDR11BP751A%@#	750	50	P	F, G, J, K, M	M, N	S	P, R	AVX, ATC
CDR11BP821A%@#	820	50	P	F, G, J, K, M	M, N	S	P, R	AVX, ATC
CDR11BP911A%@#	910	50	P	F, G, J, K, M	M, N	S	P, R	AVX, ATC
CDR11BP102A%@#	1000	50	P	F, G, J, K, M	M, N	S	P, R	AVX, ATC

	Cap.	Rated	Temp.	Cap.	Termination	Level 1	Level 2	
Part Number	Value (pF)	Voltage (V)	Limits (*)	Tol. (+/-%)	Finish (@)	(FRL)(#)	(FRL)(#)	Manufacturer
CDR12B*0R1A%@#	0.1	50	P, G	B	S, U	S	P, R	AVX, ATC
CDR12B*0R2A%@#	0.2	50	P, G	B	S, U	S	P, R	AVX, ATC
CDR12B*0R3A%@#	0.3	50	P, G	B, C	S, U	S	P, R	AVX, ATC
CDR12B*0R4A%@#	0.4	50	P, G	B, C	S, U	S	P, R	AVX, ATC
CDR12B*0R5A%@#	0.5	50	P, G	B, C, D	S, U	S	P, R	AVX, ATC
CDR12B*0R6A%@#	0.6	50	P, G	B, C, D	S, U	S	P, R	AVX, ATC
CDR12B*0R7A%@#	0.7	50	P, G	B, C, D	S, U	S	P, R	AVX, ATC
CDR12B*0R8A%@#	0.8	50	P, G	B, C, D	S, U	S	P, R	AVX, ATC
CDR12B*0R9A%@#	0.9	50	P, G	B, C, D	S, U	S	P, R	AVX, ATC
CDR12B*1R0A%@#	1.0	50	P, G	B, C, D	S, U	S	P, R	AVX, ATC
	Cap.	Rated	Temp.	Cap.	Termination	Level 1	Level 2	
Part Number	Value (pF)	Voltage (V)	Limits (*)	Tol. (+/-%)	Finish (@)	(FRL)(#)	(FRL)(#)	Manufacturer
CDR12B*1R1A%@#	1.1	50	P, G	B, C, D	S, U	S	P, R	AVX, ATC
CDR12B*1R2A%@#	1.2	50	P, G	B, C, D	S, U	S	P, R	AVX, ATC
CDR12B*1R3A%@#	1.3	50	P, G	B, C, D	S, U	S	P, R	AVX, ATC
CDR12B*1R4A%@#	1.4	50	P, G	B, C, D	S, U	S	P, R	AVX, ATC
CDR12B*1R5A%@#	1.5	50	P, G	B, C, D	S, U	S	P, R	AVX, ATC
CDR12B*1R6A%@#	1.6	50	P, G	B, C, D	S, U	S	P, R	AVX, ATC
CDR12B*1R7A%@#	1.7	50	P, G	B, C, D	S, U	S	P, R	AVX, ATC
CDR12B*1R8A%@#	1.8	50	P, G	B, C, D	S, U	S	P, R	AVX, ATC
CDR12B*1R9A%@#	1.9	50	P, G	B, C, D	S, U	S	P, R	AVX, ATC
	Cap.	Rated	Temp.	Cap.	Termination	Level 1	Level 2	
Part Number	Value (pF)	Voltage (V)	Limits (*)	Tol. (+/-%)	Finish (@)	(FRL)(#)	(FRL)(#)	Manufacturer
CDR12B*2R0A%@#	2.0	50	P, G	B, C, D	S, U	S	P, R	AVX, ATC
CDR12B*2R1A%@#	2.1	50	P, G	B, C, D	S, U	S	P, R	AVX, ATC
CDR12B*2R2A%@#	2.2	50	P, G	B, C, D	S, U	S	P, R	AVX, ATC
CDR12B*2R4A%@#	2.4	50	P, G	B, C, D	S, U	S	P, R	AVX, ATC
CDR12B*2R7A%@#	2.7	50	P, G	B, C, D	S, U	S	P, R	AVX, ATC
CDR12B*3R0A%@#	3.0	50	P, G	B, C, D	S, U	S	P, R	AVX, ATC
CDR12B*3R3A%@#	3.3	50	P, G	B, C, D	S, U	S	P, R	AVX, ATC
CDR12B*3R6A%@#	3.6	50	P, G	B, C, D	S, U	S	P, R	AVX, ATC
CDR12B*3R9A%@#	3.9	50	P, G	B, C, D	S, U	S	P, R	AVX, ATC
	Cap.	Rated	Temp.	Cap.	Termination	Level 1	Level 2	
Part Number	Value (pF)	Voltage (V)	Limits (*)	Tol. (+/-%)	Finish (@)	(FRL)(#)	(FRL)(#)	Manufacturer
CDR12B*4R3A%@#	4.3	50	P, G	B, C, D	S, U	S	P, R	AVX, ATC
CDR12B*4R7A%@#	4.7	50	P, G	B, C, D	S, U	S	P, R	AVX, ATC
CDR12B*5R1A%@#	5.1	50	P, G	B, C, D	S, U	S	P, R	AVX, ATC
CDR12B*5R6A%@#	5.6	50	P, G	B, C, D	S, U	S	P, R	AVX, ATC
CDR12B*6R2A%@#	6.2	50	P, G	B, C, D	S, U	S	P, R	AVX, ATC
CDR12B*6R8A%@#	6.8	50	P, G	B, C, J, K, M	S, U	S	P, R	AVX, ATC

CDR12B*7R5A%@#	7.5	50	P, G	B, C, J, K, M	S, U	S	P, R	AVX, ATC
CDR12B*8R2A%@#	8.2	50	P, G	B, C, J, K, M	S, U	S	P, R	AVX, ATC
CDR12B*9R1A%@#	9.1	50	P, G	B, C, J, K, M	S, U	S	P, R	AVX, ATC
	Cap.	Rated	Temp.	Cap.	Termination	Level 1	Level 2	
Part Number	Value (pF)	Voltage (V)	Limits (*)	Tol. (+/-%)	Finish (@)	(FRL)(#)	(FRL)(#)	Manufacturer
CDR12B*100A%@#	10	50	P, G	F, G, J, K, M	S, U	S	P, R	AVX, ATC
CDR12B*110A%@#	11	50	P, G	F, G, J, K, M	S, U	S	P, R	AVX, ATC
CDR12B*120A%@#	12	50	P, G	F, G, J, K, M	S, U	S	P, R	AVX, ATC
CDR12B*130A%@#	13	50	P, G	F, G, J, K, M	S, U	S	P, R	AVX, ATC
CDR12B*150A%@#	15	50	P, G	F, G, J, K, M	S, U	S	P, R	AVX, ATC
CDR12B*160A%@#	16	50	P, G	F, G, J, K, M	S, U	S	P, R	AVX, ATC
CDR12B*180A%@#	18	50	P, G	F, G, J, K, M	S, U	S	P, R	AVX, ATC
CDR12B*200A%@#	20	50	P, G	F, G, J, K, M	S, U	S	P, R	AVX, ATC
CDR12B*220A%@#	22	50	P, G	F, G, J, K, M	S, U	S	P, R	AVX, ATC
	Cap.	Rated	Temp.	Cap.	Termination	Level 1	Level 2	
Part Number	Value (pF)	Voltage (V)	Limits (*)	Tol. (+/-%)	Finish (@)	(FRL)(#)	(FRL)(#)	Manufacturer
CDR12B*240A%@#	24	50	P, G	F, G, J, K, M	S, U	S	P, R	AVX, ATC
CDR12B*270A%@#	27	50	P, G	F, G, J, K, M	S, U	S	P, R	AVX, ATC
CDR12B*300A%@#	30	50	P, G	F, G, J, K, M	S, U	S	P, R	AVX, ATC
CDR12B*330A%@#	33	50	P, G	F, G, J, K, M	S, U	S	P, R	AVX, ATC
CDR12B*360A%@#	36	50	P, G	F, G, J, K, M	S, U	S	P, R	AVX, ATC
CDR12B*390A%@#	39	50	P, G	F, G, J, K, M	S, U	S	P, R	AVX, ATC
CDR12B*430A%@#	43	50	P, G	F, G, J, K, M	S, U	S	P, R	AVX, ATC
CDR12B*470A%@#	47	50	P, G	F, G, J, K, M	S, U	S	P, R	AVX, ATC
CDR12B*510A%@#	51	50	P, G	F, G, J, K, M	S, U	S	P, R	AVX, ATC
	Cap.	Rated	Temp.	Cap.	Termination	Level 1	Level 2	
Part Number	Value (pF)	Voltage (V)	Limits (*)	Tol. (+/-%)	Finish (@)	(FRL)(#)	(FRL)(#)	Manufacturer
CDR12B*560A%@#	56	50	P, G	F, G, J, K, M	S, U	S	P, R	AVX, ATC
CDR12B*620A%@#	62	50	P, G	F, G, J, K, M	S, U	S	P, R	AVX, ATC
CDR12B*680A%@#	68	50	P, G	F, G, J, K, M	S, U	S	P, R	AVX, ATC
CDR12B*750A%@#	75	50	P, G	F, G, J, K, M	S, U	S	P, R	AVX, ATC
CDR12B*820A%@#	82	50	P, G	F, G, J, K, M	S, U	S	P, R	AVX, ATC
CDR12B*910A%@#	91	50	P, G	F, G, J, K, M	S, U	S	P, R	AVX, ATC
CDR12B*101A%@#	100	50	P, G	F, G, J, K, M	S, U	S	P, R	AVX, ATC
CDR12BP111A%@#	110	50	P	F, G, J, K, M	S, U	S	P, R	AVX, ATC
CDR12BP121A%@#	120	50	P	F, G, J, K, M	S, U	S	P, R	AVX, ATC
	Cap.	Rated	Temp.	Cap.	Termination	Level 1	Level 2	
Part Number	Value (pF)	Voltage (V)	Limits (*)	Tol. (+/-%)	Finish (@)	(FRL)(#)	(FRL)(#)	Manufacturer
CDR12BP131A%@#	130	50	P	F, G, J, K, M	S, U	S	P, R	AVX, ATC
CDR12BP151A%@#	150	50	P	F, G, J, K, M	S, U	S	P, R	AVX, ATC
CDR12BP161A%@#	160	50	P	F, G, J, K, M	S, U	S	P, R	AVX, ATC
CDR12BP181A%@#	180	50	P	F, G, J, K, M	S, U	S	P, R	AVX, ATC
CDR12BP201A%@#	200	50	P	F, G, J, K, M	S, U	S	P, R	AVX, ATC
CDR12BP221A%@#	220	50	P	F, G, J, K, M	S, U	S	P, R	AVX, ATC
CDR12BP241A%@#	240	50	P	F, G, J, K, M	S, U	S	P, R	AVX, ATC
CDR12BP271A%@#	270	50	P	F, G, J, K, M	S, U	S	P, R	AVX, ATC
CDR12BP301A%@#	300	50	P	F, G, J, K, M	S, U	S	P, R	AVX, ATC

	Cap.	Rated	Temp.	Cap.	Termination	Level 1	Level 2	
Part Number	Value (pF)	Voltage (V)	Limits (*)	Tol. (+/-%)	Finish (@)	(FRL)(#)	(FRL)(#)	Manufacturer
CDR12BP331A%@#	330	50	P	F, G, J, K, M	S, U	S	P, R	AVX, ATC
CDR12BP361A%@#	360	50	P	F, G, J, K, M	S, U	S	P, R	AVX, ATC
CDR12BP391A%@#	390	50	P	F, G, J, K, M	S, U	S	P, R	AVX, ATC
CDR12BP431A%@#	430	50	P	F, G, J, K, M	S, U	S	P, R	AVX, ATC
CDR12BP471A%@#	470	50	P	F, G, J, K, M	S, U	S	P, R	AVX, ATC
CDR12BP511A%@#	510	50	P	F, G, J, K, M	S, U	S	P, R	AVX, ATC
CDR12BP561A%@#	560	50	P	F, G, J, K, M	S, U	S	P, R	AVX, ATC
CDR12BP621A%@#	620	50	P	F, G, J, K, M	S, U	S	P, R	AVX, ATC
CDR12BP681A%@#	680	50	P	F, G, J, K, M	S, U	S	P, R	AVX, ATC
	Cap.	Rated	Temp.	Cap.	Termination	Level 1	Level 2	
Part Number	Value (pF)	Voltage (V)	Limits (*)	Tol. (+/-%)	Finish (@)	(FRL)(#)	(FRL)(#)	Manufacturer
CDR12BP751A%@#	750	50	P	F, G, J, K, M	S, U	S	P, R	AVX, ATC
CDR12BP821A%@#	820	50	P	F, G, J, K, M	S, U	S	P, R	AVX, ATC
CDR12BP911A%@#	910	50	P	F, G, J, K, M	S, U	S	P, R	AVX, ATC
CDR12BP102A%@#	1000	50	P	F, G, J, K, M	S, U	S	P, R	AVX, ATC

CDR13 Ceramic Chip Capacitors

	Cap.	Rated	Temp.	Cap.	Termination	Level 1	Level 2	
Part Number	Value (pF)	Voltage (V)	Limits (*)	Tol. (+/-%)	Finish (@)	(FRL)(#)	(FRL)(#)	Manufacturer
CDR13B*0R1E%@#	0.1	500	P, G	B	M, N	S	P, R	AVX, ATC
CDR13B*0R2E%@#	0.2	500	P, G	B	M, N	S	P, R	AVX, ATC
CDR13B*0R3E%@#	0.3	500	P, G	B, C	M, N	S	P, R	AVX, ATC
CDR13B*0R4E%@#	0.4	500	P, G	B, C	M, N	S	P, R	AVX, ATC
CDR13B*0R5E%@#	0.5	500	P, G	B, C, D	M, N	S	P, R	AVX, ATC
CDR13B*0R6E%@#	0.6	500	P, G	B, C, D	M, N	S	P, R	AVX, ATC
CDR13B*0R7E%@#	0.7	500	P, G	B, C, D	M, N	S	P, R	AVX, ATC
CDR13B*0R8E%@#	0.8	500	P, G	B, C, D	M, N	S	P, R	AVX, ATC
CDR13B*0R9E%@#	0.9	500	P, G	B, C, D	M, N	S	P, R	AVX, ATC
CDR13B*1R0E%@#	1.0	500	P, G	B, C, D	M, N	S	P, R	AVX, ATC
	Cap.	Rated	Temp.	Cap.	Termination	Level 1	Level 2	
Part Number	Value (pF)	Voltage (V)	Limits (*)	Tol. (+/-%)	Finish (@)	(FRL)(#)	(FRL)(#)	Manufacturer
CDR13B*1R1E%@#	1.1	500	P, G	B, C, D	M, N	S	P, R	AVX, ATC
CDR13B*1R2E%@#	1.2	500	P, G	B, C, D	M, N	S	P, R	AVX, ATC
CDR13B*1R3E%@#	1.3	500	P, G	B, C, D	M, N	S	P, R	AVX, ATC
CDR13B*1R4E%@#	1.4	500	P, G	B, C, D	M, N	S	P, R	AVX, ATC
CDR13B*1R5E%@#	1.5	500	P, G	B, C, D	M, N	S	P, R	AVX, ATC
CDR13B*1R6E%@#	1.6	500	P, G	B, C, D	M, N	S	P, R	AVX, ATC
CDR13B*1R7E%@#	1.7	500	P, G	B, C, D	M, N	S	P, R	AVX, ATC
CDR13B*1R8E%@#	1.8	500	P, G	B, C, D	M, N	S	P, R	AVX, ATC
CDR13B*1R9E%@#	1.9	500	P, G	B, C, D	M, N	S	P, R	AVX, ATC
	Cap.	Rated	Temp.	Cap.	Termination	Level 1	Level 2	
Part Number	Value (pF)	Voltage (V)	Limits (*)	Tol. (+/-%)	Finish (@)	(FRL)(#)	(FRL)(#)	Manufacturer

CDR13B*2R0E%@#	2.0	500	P, G	B, C, D	M, N	S	P, R	AVX, ATC
CDR13B*2R1E%@#	2.1	500	P, G	B, C, D	M, N	S	P, R	AVX, ATC
CDR13B*2R2E%@#	2.2	500	P, G	B, C, D	M, N	S	P, R	AVX, ATC
CDR13B*2R4E%@#	2.4	500	P, G	B, C, D	M, N	S	P, R	AVX, ATC
CDR13B*2R7E%@#	2.7	500	P, G	B, C, D	M, N	S	P, R	AVX, ATC
CDR13B*3R0E%@#	3.0	500	P, G	B, C, D	M, N	S	P, R	AVX, ATC
CDR13B*3R3E%@#	3.3	500	P, G	B, C, D	M, N	S	P, R	AVX, ATC
CDR13B*3R6E%@#	3.6	500	P, G	B, C, D	M, N	S	P, R	AVX, ATC
CDR13B*3R9E%@#	3.9	500	P, G	B, C, D	M, N	S	P, R	AVX, ATC
	Cap.	Rated	Temp.	Cap.	Termination	Level 1	Level 2	
Part Number	Value (pF)	Voltage (V)	Limits (*)	Tol. (+/-%)	Finish (@)	(FRL)(#)	(FRL)(#)	Manufacturer
CDR13B*4R3E%@#	4.3	500	P, G	B, C, D	M, N	S	P, R	AVX, ATC
CDR13B*4R7E%@#	4.7	500	P, G	B, C, D	M, N	S	P, R	AVX, ATC
CDR13B*5R1E%@#	5.1	500	P, G	B, C, D	M, N	S	P, R	AVX, ATC
CDR13B*5R6E%@#	5.6	500	P, G	B, C, D	M, N	S	P, R	AVX, ATC
CDR13B*6R2E%@#	6.2	500	P, G	B, C, D	M, N	S	P, R	AVX, ATC
CDR13B*6R8E%@#	6.8	500	P, G	B, C, J, K, M	M, N	S	P, R	AVX, ATC
CDR13B*7R5E%@#	7.5	500	P, G	B, C, J, K, M	M, N	S	P, R	AVX, ATC
CDR13B*8R2E%@#	8.2	500	P, G	B, C, J, K, M	M, N	S	P, R	AVX, ATC
CDR13B*9R1E%@#	9.1	500	P, G	B, C, J, K, M	M, N	S	P, R	AVX, ATC
	Cap.	Rated	Temp.	Cap.	Termination	Level 1	Level 2	
Part Number	Value (pF)	Voltage (V)	Limits (*)	Tol. (+/-%)	Finish (@)	(FRL)(#)	(FRL)(#)	Manufacturer
CDR13B*100E%@#	10	500	P, G	B, C, J, K, M	M, N	S	P, R	AVX, ATC
CDR13B*110E%@#	11	500	P, G	B, C, J, K, M	M, N	S	P, R	AVX, ATC
CDR13B*120E%@#	12	500	P, G	B, C, J, K, M	M, N	S	P, R	AVX, ATC
CDR13B*130E%@#	13	500	P, G	B, C, J, K, M	M, N	S	P, R	AVX, ATC
CDR13B*150E%@#	15	500	P, G	B, C, J, K, M	M, N	S	P, R	AVX, ATC
CDR13B*160E%@#	16	500	P, G	B, C, J, K, M	M, N	S	P, R	AVX, ATC
CDR13B*180E%@#	18	500	P, G	B, C, J, K, M	M, N	S	P, R	AVX, ATC
CDR13B*200E%@#	20	500	P, G	B, C, J, K, M	M, N	S	P, R	AVX, ATC
CDR13B*220E%@#	22	500	P, G	B, C, J, K, M	M, N	S	P, R	AVX, ATC
	Cap.	Rated	Temp.	Cap.	Termination	Level 1	Level 2	
Part Number	Value (pF)	Voltage (V)	Limits (*)	Tol. (+/-%)	Finish (@)	(FRL)(#)	(FRL)(#)	Manufacturer
CDR13B*240E%@#	24	500	P, G	B, C, J, K, M	M, N	S	P, R	AVX, ATC
CDR13B*270E%@#	27	500	P, G	B, C, J, K, M	M, N	S	P, R	AVX, ATC
CDR13B*300E%@#	30	500	P, G	B, C, J, K, M	M, N	S	P, R	AVX, ATC
CDR13B*330E%@#	33	500	P, G	B, C, J, K, M	M, N	S	P, R	AVX, ATC
CDR13B*360E%@#	36	500	P, G	B, C, J, K, M	M, N	S	P, R	AVX, ATC
CDR13B*390E%@#	39	500	P, G	B, C, J, K, M	M, N	S	P, R	AVX, ATC
CDR13B*430E%@#	43	500	P, G	B, C, J, K, M	M, N	S	P, R	AVX, ATC
CDR13B*470E%@#	47	500	P, G	F, G, J, K, M	M, N	S	P, R	AVX, ATC
CDR13B*510E%@#	51	500	P, G	F, G, J, K, M	M, N	S	P, R	AVX, ATC
	Cap.	Rated	Temp.	Cap.	Termination	Level 1	Level 2	
Part Number	Value (pF)	Voltage (V)	Limits (*)	Tol. (+/-%)	Finish (@)	(FRL)(#)	(FRL)(#)	Manufacturer
CDR13B*560E%@#	56	500	P, G	F, G, J, K, M	M, N	S	P, R	AVX, ATC
CDR13B*620E%@#	62	500	P, G	F, G, J, K, M	M, N	S	P, R	AVX, ATC
CDR13B*680E%@#	68	500	P, G	F, G, J, K, M	M, N	S	P, R	AVX, ATC

CDR13B*750E%@#	75	500	P, G	F, G, J, K, M	M, N	S	P, R	AVX, ATC
CDR13B*820E%@#	82	500	P, G	F, G, J, K, M	M, N	S	P, R	AVX, ATC
CDR13B*910E%@#	91	500	P, G	F, G, J, K, M	M, N	S	P, R	AVX, ATC
CDR13B*101E%@#	100	500	P, G	F, G, J, K, M	M, N	S	P, R	AVX, ATC
CDR13B*111D%@#	110	300	P, G	F, G, J, K, M	M, N	S	P, R	AVX, ATC
CDR13B*121D%@#	120	300	P, G	F, G, J, K, M	M, N	S	P, R	AVX, ATC
	Cap.	Rated	Temp.	Cap.	Termination	Level 1	Level 2	
Part Number	Value (pF)	Voltage (V)	Limits (*)	Tol. (+/-%)	Finish (@)	(FRL)(#)	(FRL)(#)	Manufacturer
CDR13B*131D%@#	130	300	P, G	F, G, J, K, M	M, N	S	P, R	AVX, ATC
CDR13B*151D%@#	150	300	P, G	F, G, J, K, M	M, N	S	P, R	AVX, ATC
CDR13B*161D%@#	160	300	P, G	F, G, J, K, M	M, N	S	P, R	AVX, ATC
CDR13B*181D%@#	180	300	P, G	F, G, J, K, M	M, N	S	P, R	AVX, ATC
CDR13B*201D%@#	200	300	P, G	F, G, J, K, M	M, N	S	P, R	AVX, ATC
CDR13B*221C%@#	220	200	P, G	F, G, J, K, M	M, N	S	P, R	AVX, ATC
CDR13B*241C%@#	240	200	P, G	F, G, J, K, M	M, N	S	P, R	AVX, ATC
CDR13B*271C%@#	270	200	P, G	F, G, J, K, M	M, N	S	P, R	AVX, ATC
CDR13B*301C%@#	300	200	P, G	F, G, J, K, M	M, N	S	P, R	AVX, ATC
	Cap.	Rated	Temp.	Cap.	Termination	Level 1	Level 2	
Part Number	Value (pF)	Voltage (V)	Limits (*)	Tol. (+/-%)	Finish (@)	(FRL)(#)	(FRL)(#)	Manufacturer
CDR13B*331C%@#	330	200	P, G	F, G, J, K, M	M, N	S	P, R	AVX, ATC
CDR13B*361C%@#	360	200	P, G	F, G, J, K, M	M, N	S	P, R	AVX, ATC
CDR13B*391C%@#	390	200	P, G	F, G, J, K, M	M, N	S	P, R	AVX, ATC
CDR13B*431C%@#	430	200	P, G	F, G, J, K, M	M, N	S	P, R	AVX, ATC
CDR13B*471C%@#	470	200	P, G	F, G, J, K, M	M, N	S	P, R	AVX, ATC
CDR13B*511B%@#	510	100	P, G	F, G, J, K, M	M, N	S	P, R	AVX, ATC
CDR13B*561B%@#	560	100	P, G	F, G, J, K, M	M, N	S	P, R	AVX, ATC
CDR13B*621B%@#	620	100	P, G	F, G, J, K, M	M, N	S	P, R	AVX, ATC
CDR13B*681A%@#	680	50	P, G	F, G, J, K, M	M, N	S	P, R	AVX, ATC
	Cap.	Rated	Temp.	Cap.	Termination	Level 1	Level 2	
Part Number	Value (pF)	Voltage (V)	Limits (*)	Tol. (+/-%)	Finish (@)	(FRL)(#)	(FRL)(#)	Manufacturer
CDR13B*751A%@#	750	50	P, G	F, G, J, K, M	M, N	S	P, R	AVX, ATC
CDR13B*821A%@#	820	50	P, G	F, G, J, K, M	M, N	S	P, R	AVX, ATC
CDR13B*911A%@#	910	50	P, G	F, G, J, K, M	M, N	S	P, R	AVX, ATC
CDR13B*102A%@#	1000	50	P, G	F, G, J, K, M	M, N	S	P, R	AVX, ATC
CDR13BP112A%@#	1100	50	P	F, G, J, K, M	M, N	S	P, R	AVX, ATC
CDR13BP122A%@#	1200	50	P	F, G, J, K, M	M, N	S	P, R	AVX, ATC
CDR13BP132A%@#	1300	50	P	F, G, J, K, M	M, N	S	P, R	AVX, ATC
CDR13BP152A%@#	1500	50	P	F, G, J, K, M	M, N	S	P, R	AVX, ATC
CDR13BP162A%@#	1600	50	P	F, G, J, K, M	M, N	S	P, R	AVX, ATC
	Cap.	Rated	Temp.	Cap.	Termination	Level 1	Level 2	
Part Number	Value (pF)	Voltage (V)	Limits (*)	Tol. (+/-%)	Finish (@)	(FRL)(#)	(FRL)(#)	Manufacturer
CDR13BP182A%@#	1800	50	P	F, G, J, K, M	M, N	S	P, R	AVX, ATC
CDR13BP202A%@#	2000	50	P	F, G, J, K, M	M, N	S	P, R	AVX, ATC
CDR13BP222A%@#	2200	50	P	F, G, J, K, M	M, N	S	P, R	AVX, ATC
CDR13BP242A%@#	2400	50	P	F, G, J, K, M	M, N	S	P, R	AVX, ATC
CDR13BP272A%@#	2700	50	P	F, G, J, K, M	M, N	S	P, R	AVX, ATC
CDR13BP302A%@#	3000	50	P	F, G, J, K, M	M, N	S	P, R	AVX, ATC

CDR13BP332A%@#	3300	50	P	F, G, J, K, M	M, N	S	P, R	AVX, ATC
CDR13BP362A%@#	3600	50	P	F, G, J, K, M	M, N	S	P, R	AVX, ATC
CDR13BP392A%@#	3900	50	P	F, G, J, K, M	M, N	S	P, R	AVX, ATC
	Cap.	Rated	Temp.	Cap.	Termination	Level 1	Level 2	
Part Number	Value (pF)	Voltage (V)	Limits (*)	Tol. (+/-%)	Finish (@)	(FRL)(#)	(FRL)(#)	Manufacturer
CDR13BP432A%@#	4300	50	P	F, G, J, K, M	M, N	S	P, R	AVX, ATC
CDR13BP472A%@#	4700	50	P	F, G, J, K, M	M, N	S	P, R	AVX, ATC
CDR13BP502A%@#	5000	50	P	F, G, J, K, M	M, N	S	P, R	AVX, ATC
CDR13BP512A%@#	5100	50	P	F, G, J, K, M	M, N	S	P, R	AVX, ATC

CDR14 Ceramic Chip Capacitors

	Cap.	Rated	Temp.	Cap.	Termination	Level 1	Level 2	
Part Number	Value (pF)	Voltage (V)	Limits (*)	Tol. (+/-%)	Finish (@)	(FRL)(#)	(FRL)(#)	Manufacturer
CDR14BP0R1E%@#	0.1	500	P	B	M, N	S	P, R	AVX, ATC
CDR14B*0R2E%@#	0.2	500	P, G	B	M, N	S	P, R	AVX, ATC
CDR14B*0R3E%@#	0.3	500	P, G	B, C	M, N	S	P, R	AVX, ATC
CDR14B*0R4E%@#	0.4	500	P, G	B, C	M, N	S	P, R	AVX, ATC
CDR14B*0R5E%@#	0.5	500	P, G	B, C, D	M, N	S	P, R	AVX, ATC
CDR14B*0R6E%@#	0.6	500	P, G	B, C, D	M, N	S	P, R	AVX, ATC
CDR14B*0R7E%@#	0.7	500	P, G	B, C, D	M, N	S	P, R	AVX, ATC
CDR14B*0R8E%@#	0.8	500	P, G	B, C, D	M, N	S	P, R	AVX, ATC
CDR14B*0R9E%@#	0.9	500	P, G	B, C, D	M, N	S	P, R	AVX, ATC
CDR14B*1R0E%@#	1.0	500	P, G	B, C, D	M, N	S	P, R	AVX, ATC
	Cap.	Rated	Temp.	Cap.	Termination	Level 1	Level 2	
Part Number	Value (pF)	Voltage (V)	Limits (*)	Tol. (+/-%)	Finish (@)	(FRL)(#)	(FRL)(#)	Manufacturer
CDR14B*1R1E%@#	1.1	500	P, G	B, C, D	M, N	S	P, R	AVX, ATC
CDR14B*1R2E%@#	1.2	500	P, G	B, C, D	M, N	S	P, R	AVX, ATC
CDR14B*1R3E%@#	1.3	500	P, G	B, C, D	M, N	S	P, R	AVX, ATC
CDR14B*1R4E%@#	1.4	500	P, G	B, C, D	M, N	S	P, R	AVX, ATC
CDR14B*1R5E%@#	1.5	500	P, G	B, C, D	M, N	S	P, R	AVX, ATC
CDR14B*1R6E%@#	1.6	500	P, G	B, C, D	M, N	S	P, R	AVX, ATC
CDR14B*1R7E%@#	1.7	500	P, G	B, C, D	M, N	S	P, R	AVX, ATC
CDR14B*1R8E%@#	1.8	500	P, G	B, C, D	M, N	S	P, R	AVX, ATC
CDR14B*1R9E%@#	1.9	500	P, G	B, C, D	M, N	S	P, R	AVX, ATC
	Cap.	Rated	Temp.	Cap.	Termination	Level 1	Level 2	
Part Number	Value (pF)	Voltage (V)	Limits (*)	Tol. (+/-%)	Finish (@)	(FRL)(#)	(FRL)(#)	Manufacturer
CDR14B*2R0E%@#	2.0	500	P, G	B, C, D	M, N	S	P, R	AVX, ATC
CDR14B*2R1E%@#	2.1	500	P, G	B, C, D	M, N	S	P, R	AVX, ATC
CDR14B*2R2E%@#	2.2	500	P, G	B, C, D	M, N	S	P, R	AVX, ATC
CDR14B*2R4E%@#	2.4	500	P, G	B, C, D	M, N	S	P, R	AVX, ATC
CDR14B*2R7E%@#	2.7	500	P, G	B, C, D	M, N	S	P, R	AVX, ATC
CDR14B*3R0E%@#	3.0	500	P, G	B, C, D	M, N	S	P, R	AVX, ATC
CDR14B*3R3E%@#	3.3	500	P, G	B, C, D	M, N	S	P, R	AVX, ATC
CDR14B*3R6E%@#	3.6	500	P, G	B, C, D	M, N	S	P, R	AVX, ATC

CDR14B*3R9E%@#	3.9	500	P, G	B, C, D	M, N	S	P, R	AVX, ATC
	Cap.	Rated	Temp.	Cap.	Termination	Level 1	Level 2	
Part Number	Value (pF)	Voltage (V)	Limits (*)	Tol. (+/-%)	Finish (@)	(FRL)(#)	(FRL)(#)	Manufacturer
CDR14B*4R3E%@#	4.3	500	P, G	B, C, D	M, N	S	P, R	AVX, ATC
CDR14B*4R7E%@#	4.7	500	P, G	B, C, D	M, N	S	P, R	AVX, ATC
CDR14B*5R1E%@#	5.1	500	P, G	B, C, D	M, N	S	P, R	AVX, ATC
CDR14B*5R6E%@#	5.6	500	P, G	B, C, D	M, N	S	P, R	AVX, ATC
CDR14B*6R2E%@#	6.2	500	P, G	B, C, D	M, N	S	P, R	AVX, ATC
CDR14B*6R8E%@#	6.8	500	P, G	B, C, J, K, M	M, N	S	P, R	AVX, ATC
CDR14B*7R5E%@#	7.5	500	P, G	B, C, J, K, M	M, N	S	P, R	AVX, ATC
CDR14B*8R2E%@#	8.2	500	P, G	B, C, J, K, M	M, N	S	P, R	AVX, ATC
CDR14B*9R1E%@#	9.1	500	P, G	B, C, J, K, M	M, N	S	P, R	AVX, ATC
	Cap.	Rated	Temp.	Cap.	Termination	Level 1	Level 2	
Part Number	Value (pF)	Voltage (V)	Limits (*)	Tol. (+/-%)	Finish (@)	(FRL)(#)	(FRL)(#)	Manufacturer
CDR14B*100E%@#	10	500	P, G	B, C, J, K, M	M, N	S	P, R	AVX, ATC
CDR14B*110E%@#	11	500	P, G	B, C, J, K, M	M, N	S	P, R	AVX, ATC
CDR14B*120E%@#	12	500	P, G	B, C, J, K, M	M, N	S	P, R	AVX, ATC
CDR14B*130E%@#	13	500	P, G	B, C, J, K, M	M, N	S	P, R	AVX, ATC
CDR14B*150E%@#	15	500	P, G	B, C, J, K, M	M, N	S	P, R	AVX, ATC
CDR14B*160E%@#	16	500	P, G	B, C, J, K, M	M, N	S	P, R	AVX, ATC
CDR14B*180E%@#	18	500	P, G	B, C, J, K, M	M, N	S	P, R	AVX, ATC
CDR14B*200E%@#	20	500	P, G	B, C, J, K, M	M, N	S	P, R	AVX, ATC
CDR14B*220E%@#	22	500	P, G	B, C, J, K, M	M, N	S	P, R	AVX, ATC
	Cap.	Rated	Temp.	Cap.	Termination	Level 1	Level 2	
Part Number	Value (pF)	Voltage (V)	Limits (*)	Tol. (+/-%)	Finish (@)	(FRL)(#)	(FRL)(#)	Manufacturer
CDR14B*240E%@#	24	500	P, G	B, C, J, K, M	M, N	S	P, R	AVX, ATC
CDR14B*270E%@#	27	500	P, G	B, C, J, K, M	M, N	S	P, R	AVX, ATC
CDR14B*300E%@#	30	500	P, G	B, C, J, K, M	M, N	S	P, R	AVX, ATC
CDR14B*330E%@#	33	500	P, G	B, C, J, K, M	M, N	S	P, R	AVX, ATC
CDR14B*360E%@#	36	500	P, G	B, C, J, K, M	M, N	S	P, R	AVX, ATC
CDR14B*390E%@#	39	500	P, G	B, C, J, K, M	M, N	S	P, R	AVX, ATC
CDR14B*430E%@#	43	500	P, G	B, C, J, K, M	M, N	S	P, R	AVX, ATC
CDR14B*470E%@#	47	500	P, G	F, G, J, K, M	M, N	S	P, R	AVX, ATC
CDR14B*510E%@#	51	500	P, G	F, G, J, K, M	M, N	S	P, R	AVX, ATC
	Cap.	Rated	Temp.	Cap.	Termination	Level 1	Level 2	
Part Number	Value (pF)	Voltage (V)	Limits (*)	Tol. (+/-%)	Finish (@)	(FRL)(#)	(FRL)(#)	Manufacturer
CDR14B*560E%@#	56	500	P, G	F, G, J, K, M	M, N	S	P, R	AVX, ATC
CDR14B*620E%@#	62	500	P, G	F, G, J, K, M	M, N	S	P, R	AVX, ATC
CDR14B*680E%@#	68	500	P, G	F, G, J, K, M	M, N	S	P, R	AVX, ATC
CDR14B*750E%@#	75	500	P, G	F, G, J, K, M	M, N	S	P, R	AVX, ATC
CDR14B*820E%@#	82	500	P, G	F, G, J, K, M	M, N	S	P, R	AVX, ATC
CDR14B*910E%@#	91	500	P, G	F, G, J, K, M	M, N	S	P, R	AVX, ATC
CDR14B*101E%@#	100	500	P, G	F, G, J, K, M	M, N	S	P, R	AVX, ATC
CDR14B*111D%@#	110	300	P, G	F, G, J, K, M	M, N	S	P, R	AVX, ATC
CDR14B*121D%@#	120	300	P, G	F, G, J, K, M	M, N	S	P, R	AVX, ATC
	Cap.	Rated	Temp.	Cap.	Termination	Level 1	Level 2	
Part Number	Value (pF)	Voltage (V)	Limits (*)	Tol. (+/-%)	Finish (@)	(FRL)(#)	(FRL)(#)	Manufacturer

CDR14B*131D%@#	130	300	P, G	F, G, J, K, M	M, N	S	P, R	AVX, ATC
CDR14B*151D%@#	150	300	P, G	F, G, J, K, M	M, N	S	P, R	AVX, ATC
CDR14B*161D%@#	160	300	P, G	F, G, J, K, M	M, N	S	P, R	AVX, ATC
CDR14B*181D%@#	180	300	P, G	F, G, J, K, M	M, N	S	P, R	AVX, ATC
CDR14B*201D%@#	200	300	P, G	F, G, J, K, M	M, N	S	P, R	AVX, ATC
CDR14B*221C%@#	220	200	P, G	F, G, J, K, M	M, N	S	P, R	AVX, ATC
CDR14B*241C%@#	240	200	P, G	F, G, J, K, M	M, N	S	P, R	AVX, ATC
CDR14B*271C%@#	270	200	P, G	F, G, J, K, M	M, N	S	P, R	AVX, ATC
CDR14B*301C%@#	300	200	P, G	F, G, J, K, M	M, N	S	P, R	AVX, ATC
	Cap.	Rated	Temp.	Cap.	Termination	Level 1	Level 2	
Part Number	Value (pF)	Voltage (V)	Limits (*)	Tol. (+/-%)	Finish (@)	(FRL)(#)	(FRL)(#)	Manufacturer
CDR14B*331C%@#	330	200	P, G	F, G, J, K, M	M, N	S	P, R	AVX, ATC
CDR14B*361C%@#	360	200	P, G	F, G, J, K, M	M, N	S	P, R	AVX, ATC
CDR14B*391C%@#	390	200	P, G	F, G, J, K, M	M, N	S	P, R	AVX, ATC
CDR14B*431C%@#	430	200	P, G	F, G, J, K, M	M, N	S	P, R	AVX, ATC
CDR14B*471C%@#	470	200	P, G	F, G, J, K, M	M, N	S	P, R	AVX, ATC
CDR14B*511B%@#	510	100	P, G	F, G, J, K, M	M, N	S	P, R	AVX, ATC
CDR14B*561B%@#	560	100	P, G	F, G, J, K, M	M, N	S	P, R	AVX, ATC
CDR14B*621B%@#	620	100	P, G	F, G, J, K, M	M, N	S	P, R	AVX, ATC
CDR14B*681A%@#	680	50	P, G	F, G, J, K, M	M, N	S	P, R	AVX, ATC
	Cap.	Rated	Temp.	Cap.	Termination	Level 1	Level 2	
Part Number	Value (pF)	Voltage (V)	Limits (*)	Tol. (+/-%)	Finish (@)	(FRL)(#)	(FRL)(#)	Manufacturer
CDR14B*751A%@#	750	50	P, G	F, G, J, K, M	M, N	S	P, R	AVX, ATC
CDR14B*821A%@#	820	50	P, G	F, G, J, K, M	M, N	S	P, R	AVX, ATC
CDR14B*911A%@#	910	50	P, G	F, G, J, K, M	M, N	S	P, R	AVX, ATC
CDR14B*102A%@#	1000	50	P, G	F, G, J, K, M	M, N	S	P, R	AVX, ATC
CDR14BP112A%@#	1100	50	P, G	F, G, J, K, M	M, N	S	P, R	AVX, ATC
CDR14BP122A%@#	1200	50	P, G	F, G, J, K, M	M, N	S	P, R	AVX, ATC
CDR14BP132A%@#	1300	50	P	F, G, J, K, M	M, N	S	P, R	AVX, ATC
CDR14BP152A%@#	1500	50	P	F, G, J, K, M	M, N	S	P, R	AVX, ATC
CDR14BP162A%@#	1600	50	P	F, G, J, K, M	M, N	S	P, R	AVX, ATC
	Cap.	Rated	Temp.	Cap.	Termination	Level 1	Level 2	
Part Number	Value (pF)	Voltage (V)	Limits (*)	Tol. (+/-%)	Finish (@)	(FRL)(#)	(FRL)(#)	Manufacturer
CDR14BP182A%@#	1800	50	P	F, G, J, K, M	M, N	S	P, R	AVX, ATC
CDR14BP202A%@#	2000	50	P	F, G, J, K, M	M, N	S	P, R	AVX, ATC
CDR14BP222A%@#	2200	50	P	F, G, J, K, M	M, N	S	P, R	AVX, ATC
CDR14BP242A%@#	2400	50	P	F, G, J, K, M	M, N	S	P, R	AVX, ATC
CDR14BP272A%@#	2700	50	P	F, G, J, K, M	M, N	S	P, R	AVX, ATC
CDR14BP302A%@#	3000	50	P	F, G, J, K, M	M, N	S	P, R	AVX, ATC
CDR14BP332A%@#	3300	50	P	F, G, J, K, M	M, N	S	P, R	AVX, ATC
CDR14BP362A%@#	3600	50	P	F, G, J, K, M	M, N	S	P, R	AVX, ATC
CDR14BP392A%@#	3900	50	P	F, G, J, K, M	M, N	S	P, R	AVX, ATC
	Cap.	Rated	Temp.	Cap.	Termination	Level 1	Level 2	
Part Number	Value (pF)	Voltage (V)	Limits (*)	Tol. (+/-%)	Finish (@)	(FRL)(#)	(FRL)(#)	Manufacturer
CDR14BP432A%@#	4300	50	P	F, G, J, K, M	M, N	S	P, R	AVX, ATC
CDR14BP472A%@#	4700	50	P	F, G, J, K, M	M, N	S	P, R	AVX, ATC
CDR14BP502A%@#	5000	50	P	F, G, J, K, M	M, N	S	P, R	AVX, ATC

CDR14BP512A%@#	5100	50	P	F, G, J, K, M	M, N	S	P, R	AVX, ATC

CDR31 Ceramic Chip Capacitors

	Cap.	Rated	Cap.	Termination	Level 1	Level 2	
Part Number	Value (pF)	Voltage (V)	Tol (+/-%)	Finish (@)	(FRL)(#)	(FRL)(#)	Manufacturer
CDR31BP1R0B%@#	1.0	100	B, C	S, M, N, U	S	P, R	AVX, KEM, VIT
CDR31BP1R1B%@#	1.1	100	B, C	S, M, N, U	S	P, R	AVX, KEM, VIT
CDR31BP1R2B%@#	1.2	100	B, C	S, M, N, U	S	P, R	AVX, KEM, VIT
CDR31BP1R3B%@#	1.3	100	B, C	S, M, N, U	S	P, R	AVX, KEM, VIT
CDR31BP1R5B%@#	1.5	100	B, C	S, M, N, U	S	P, R	AVX, KEM, VIT
CDR31BP1R6B%@#	1.6	100	B, C	S, M, N, U	S	P, R	AVX, KEM, VIT
CDR31BP1R8B%@#	1.8	100	B, C	S, M, N, U	S	P, R	AVX, KEM, VIT
CDR31BP2R0B%@#	2.0	100	B, C	S, M, N, U	S	P, R	AVX, KEM, VIT
CDR31BP2R2B%@#	2.2	100	B, C	S, M, N, U	S	P, R	AVX, KEM, VIT
CDR31BP2R4B%@#	2.4	100	B, C	S, M, N, U	S	P, R	AVX, KEM, VIT
	Cap.	Rated	Cap.	Termination	Level 1	Level 2	
Part Number	Value (pF)	Voltage (V)	Tol (+/-%)	Finish (@)	(FRL)(#)	(FRL)(#)	Manufacturer
CDR31BP2R7B%@#	2.7	100	B, C, D	S, M, N, U	S	P, R	AVX, KEM, VIT
CDR31BP3R0B%@#	3.0	100	B, C, D	S, M, N, U	S	P, R	AVX, KEM, VIT
CDR31BP3R3B%@#	3.3	100	B, C, D	S, M, N, U	S	P, R	AVX, KEM, VIT
CDR31BP3R6B%@#	3.6	100	B, C, D	S, M, N, U	S	P, R	AVX, KEM, VIT
CDR31BP3R9B%@#	3.9	100	B, C, D	S, M, N, U	S	P, R	AVX, KEM, VIT
CDR31BP4R3B%@#	4.3	100	B, C, D	S, M, N, U	S	P, R	AVX, KEM, VIT
CDR31BP4R7B%@#	4.7	100	B, C, D	S, M, N, U	S	P, R	AVX, KEM, VIT
CDR31BP5R1B%@#	5.1	100	B, C, D	S, M, N, U	S	P, R	AVX, KEM, VIT
CDR31BP5R6B%@#	5.6	100	B, C, D	S, M, N, U	S	P, R	AVX, KEM, VIT
	Cap.	Rated	Cap.	Termination	Level 1	Level 2	
Part Number	Value (pF)	Voltage (V)	Tol (+/-%)	Finish (@)	(FRL)(#)	(FRL)(#)	Manufacturer
CDR31BP6R2B%@#	6.2	100	B, C, D	S, M, N, U	S	P, R	AVX, KEM VIT
CDR31BP6R8B%@#	6.8	100	B, C, D	S, M, N, U	S	P, R	AVX, KEM VIT
CDR31BP7R5B%@#	7.5	100	B, C, D	S, M, N, U	S	P, R	AVX, KEM VIT
CDR31BP8R2B%@#	8.2	100	B, C, D	S, M, N, U	S	P, R	AVX, KEM, VIT
CDR31BP9R1B%@#	9.1	100	B, C, D	S, M, N, U	S	P, R	AVX, KEM, VIT
CDR31BP100B%@#	10	100	F, J, K	S, M, N, U	S	P, R	AVX, KEM, VIT
CDR31BP110B%@#	11	100	F, J, K	S, M, N, U	S	P, R	AVX, KEM, VIT
CDR31BP120B%@#	12	100	F, J, K	S, M, N, U	S	P, R	AVX, KEM, VIT
CDR31BP130B%@#	13	100	F, J, K	S, M, N, U	S	P, R	AVX, KEM, VIT
	Cap.	Rated	Cap.	Termination	Level 1	Level 2	
Part Number	Value (pF)	Voltage (V)	Tol (+/-%)	Finish (@)	(FRL)(#)	(FRL)(#)	Manufacturer
CDR31BP150B%@#	15	100	F, J, K	S, M, N, U	S	P, R	AVX, KEM, VIT
CDR31BP160B%@#	16	100	F, J, K	S, M, N, U	S	P, R	AVX, KEM, VIT
CDR31BP180B%@#	18	100	F, J, K	S, M, N, U	S	P, R	AVX, KEM, VIT
CDR31BP200B%@#	20	100	F, J, K	S, M, N, U	S	P, R	AVX, KEM, VIT
CDR31BP220B%@#	22	100	F, J, K	S, M, N, U	S	P, R	AVX, KEM, VIT

CDR31BP240B%@#	24	100	F, J, K	S, M, N, U	S	P, R	AVX, KEM, VIT
CDR31BP270B%@#	27	100	F, J, K	S, M, N, U	S	P, R	AVX, KEM VIT
CDR31BP300B%@#	30	100	F, J, K	S, M, N, U	S	P, R	AVX, KEM VIT
CDR31BP330B%@#	33	100	F, J, K	S, M, N, U	S	P, R	AVX, KEM VIT
	Cap.	Rated	Cap.	Termination	Level 1	Level 2	
Part Number	Value (pF)	Voltage (V)	Tol (+/-%)	Finish (@)	(FRL)(#)	(FRL)(#)	Manufacturer
CDR31BP360B%@#	36	100	F, J, K	S, M, N, U	S	P, R	AVX, KEM, VIT
CDR31BP390B%@#	39	100	F, J, K	S, M, N, U	S	P, R	AVX, KEM, VIT
CDR31BP430B%@#	43	100	F, J, K	S, M, N, U	S	P, R	AVX, KEM, VIT
CDR31BP470B%@#	47	100	F, J, K	S, M, N, U	S	P, R	AVX, KEM, VIT
CDR31BP510B%@#	51	100	F, J, K	S, M, N, U	S	P, R	AVX, KEM, VIT
CDR31BP560B%@#	56	100	F, J, K	S, M, N, U	S	P, R	AVX, KEM, VIT
CDR31BP620B%@#	62	100	F, J, K	S, M, N, U	S	P, R	AVX, KEM, VIT
CDR31BP680B%@#	68	100	F, J, K	S, M, N, U	S	P, R	AVX, KEM, VIT
CDR31BP750B%@#	75	100	F, J, K	S, M, N, U	S	P, R	AVX, KEM, VIT
	Cap.	Rated	Cap.	Termination	Level 1	Level 2	
Part Number	Value (pF)	Voltage (V)	Tol (+/-%)	Finish (@)	(FRL)(#)	(FRL)(#)	Manufacturer
CDR31BP820B%@#	82	100	F, J, K	S, M, N, U	S	P, R	AVX, KEM, VIT
CDR31BP910B%@#	91	100	F, J, K	S, M, N, U	S	P, R	AVX, KEM, VIT
CDR31BP101B%@#	100	100	F, J, K	S, M, N, U	S	P, R	AVX, KEM VIT
CDR31BP111B%@#	110	100	F, J, K	S, M, N, U	S	P, R	AVX, KEM VIT
CDR31BP121B%@#	120	100	F, J, K	S, M, N, U	S	P, R	AVX, KEM, VIT
CDR31BP131B%@#	130	100	F, J, K	S, M, N, U	S	P, R	AVX, KEM, VIT
CDR31BP151B%@#	150	100	F, J, K	S, M, N, U	S	P, R	AVX, KEM, VIT
CDR31BP161B%@#	160	100	F, J, K	S, M, N, U	S	P, R	AVX, KEM, VIT
CDR31BP181B%@#	180	100	F, J, K	S, M, N, U	S	P, R	AVX, KEM, VIT
	Cap.	Rated	Cap.	Termination	Level 1	Level 2	
Part Number	Value (pF)	Voltage (V)	Tol (+/-%)	Finish (@)	(FRL)(#)	(FRL)(#)	Manufacturer
CDR31BP201B%@#	200	100	F, J, K	S, M, N, U	S	P, R	AVX, KEM, VIT
CDR31BP221B%@#	220	100	F, J, K	S, M, N, U	S	P, R	AVX, KEM, VIT
CDR31BP241B%@#	240	100	F, J, K	S, M, N, U	S	P, R	AVX, KEM, VIT
CDR31BP271B%@#	270	100	F, J, K	S, M, N, U	S	P, R	AVX, KEM, VIT
CDR31BP301B%@#	300	100	F, J, K	S, M, N, U	S	P, R	AVX, KEM, VIT
CDR31BP331B%@#	330	100	F, J, K	S, M, N, U	S	P, R	AVX, KEM, VIT
CDR31BP361B%@#	360	100	F, J, K	S, M, N, U	S	P, R	AVX, KEM, VIT
CDR31BP391B%@#	390	100	F, J, K	S, M, N, U	S	P, R	AVX, KEM, VIT
CDR31BP431B%@#	430	100	F, J, K	S, M, N, U	S	P, R	AVX, KEM, VIT
	Cap.	Rated	Cap.	Termination	Level 1	Level 2	
Part Number	Value (pF)	Voltage (V)	Tol (+/-%)	Finish (@)	(FRL)(#)	(FRL)(#)	Manufacturer
CDR31BP471B%@#	470	100	F, J, K	S, M, N, U	S	P, R	AVX, KEM, VIT
CDR31BP511A%@#	510	50	F, J, K	S, M, N, U	S	P, R	AVX, KEM, VIT
CDR31BP561A%@#	560	50	F, J, K	S, M, N, U	S	P, R	AVX, KEM, VIT
CDR31BP621A%@#	620	50	F, J, K	S, M, N, U	S	P, R	AVX, KEM, VIT
CDR31BP681A%@#	680	50	F, J, K	S, M, N, U	S	P, R	AVX, KEM, VIT
CDR31BX471B%@#	470	100	K, M	S, M, N, U	S	P, R	AVX, KEM, VIT
CDR31BX561B%@#	560	100	K, M	S, M, N, U	S	P, R	AVX, KEM, VIT
CDR31BX681B%@#	680	100	K, M	S, M, N, U	S	P, R	AVX, KEM, VIT

CDR31BX821B%@#	820	100	K, M	S, M, N, U	S	P, R	AVX, KEM, VIT
	Cap.	Rated	Cap.	Termination	Level 1	Level 2	
Part Number	Value (pF)	Voltage (V)	Tol (+/-%)	Finish (@)	(FRL)(#)	(FRL)(#)	Manufacturer
CDR31BX102B%@#	1000	100	K, M	S, M, N, U	S	P, R	AVX, KEM, VIT
CDR31BX122B%@#	1200	100	K, M	S, M, N, U	S	P, R	AVX, KEM, VIT
CDR31BX152B%@#	1500	100	K, M	S, M, N, U	S	P, R	AVX, KEM, VIT
CDR31BX182B%@#	1800	100	K, M	S, M, N, U	S	P, R	AVX, KEM, VIT
CDR31BX222B%@#	2200	100	K, M	S, M, N, U	S	P, R	AVX, KEM, VIT
CDR31BX272B%@#	2700	100	K, M	S, M, N, U	S	P, R	AVX, KEM, VIT
CDR31BX332B%@#	3300	100	K, M	S, M, N, U	S	P, R	AVX, KEM, VIT
CDR31BX392B%@#	3900	100	K, M	S, M, N, U	S	P, R	AVX, KEM, VIT
CDR31BX472B%@#	4700	100	K, M	S, M, N, U	S	P, R	AVX, KEM, VIT
	Cap.	Rated	Cap.	Termination	Level 1	Level 2	
Part Number	Value (pF)	Voltage (V)	Tol (+/-%)	Finish (@)	(FRL)(#)	(FRL)(#)	Manufacturer
CDR31BX562A%@#	5600	50	K, M	S, M, N, U	S	P, R	AVX, KEM, VIT
CDR31BX682A%@#	6800	50	K, M	S, M, N, U	S	P, R	AVX, KEM, VIT
CDR31BX822A%@#	8200	50	K, M	S, M, N, U	S	P, R	AVX, KEM, VIT
CDR31BX103A%@#	10000	50	K, M	S, M, N, U	S	P, R	AVX, KEM, VIT
CDR31BX123A%@#	12000	50	K, M	S, M, N, U	S	P, R	AVX, KEM, VIT
CDR31BX153A%@#	15000	50	K, M	S, M, N, U	S	P, R	AVX, KEM, VIT
CDR31BX183A%@#	18000	50	K, M	S, M, N, U	S	P, R	AVX, KEM, VIT

CDR32 Ceramic Chip Capacitors

	Cap.	Rated	Cap.	Termination	Level 1	Level 2	
Part Number	Value (pF)	Voltage (V)	Tol (+/-%)	Finish (@)	(FRL)(#)	(FRL)(#)	Manufacturer
CDR32BP1R0B%@#	1.0	100	B, C	S, M, N, U	S	P, R	AVX, KEM, VIT
CDR32BP1R1B%@#	1.1	100	B, C	S, M, N, U	S	P, R	AVX, KEM, VIT
CDR32BP1R2B%@#	1.2	100	B, C	S, M, N, U	S	P, R	AVX, KEM, VIT
CDR32BP1R3B%@#	1.3	100	B, C	S, M, N, U	S	P, R	AVX, KEM, VIT
CDR32BP1R5B%@#	1.5	100	B, C	S, M, N, U	S	P, R	AVX, KEM, VIT
CDR32BP1R6B%@#	1.6	100	B, C	S, M, N, U	S	P, R	AVX, KEM, VIT
CDR32BP1R8B%@#	1.8	100	B, C	S, M, N, U	S	P, R	AVX, KEM, VIT
CDR32BP2R0B%@#	2.0	100	B, C	S, M, N, U	S	P, R	AVX, KEM, VIT
CDR32BP2R2B%@#	2.2	100	B, C	S, M, N, U	S	P, R	AVX, KEM, VIT
CDR32BP2R4B%@#	2.4	100	B, C	S, M, N, U	S	P, R	AVX, KEM, VIT
	Cap.	Rated	Cap.	Termination	Level 1	Level 2	
Part Number	Value (pF)	Voltage (V)	Tol (+/-%)	Finish (@)	(FRL)(#)	(FRL)(#)	Manufacturer
CDR32BP2R7B%@#	2.7	100	B, C, D	S, M, N, U	S	P, R	AVX, KEM, VIT
CDR32BP3R0B%@#	3.0	100	B, C, D	S, M, N, U	S	P, R	AVX, KEM, VIT
CDR32BP3R3B%@#	3.3	100	B, C, D	S, M, N, U	S	P, R	AVX, KEM, VIT
CDR32BP3R6B%@#	3.6	100	B, C, D	S, M, N, U	S	P, R	AVX, KEM, VIT
CDR32BP3R9B%@#	3.9	100	B, C, D	S, M, N, U	S	P, R	AVX, KEM, VIT
CDR32BP4R3B%@#	4.3	100	B, C, D	S, M, N, U	S	P, R	AVX, KEM, VIT
CDR32BP4R7B%@#	4.7	100	B, C, D	S, M, N, U	S	P, R	AVX, KEM, VIT

CDR32BP5R1B%@#	5.1	100	B, C, D	S, M, N, U	S	P, R	AVX, KEM, VIT
CDR32BP5R6B%@#	5.6	100	B, C, D	S, M, N, U	S	P, R	AVX, KEM, VIT
	Cap.	Rated	Cap.	Termination	Level 1	Level 2	
Part Number	Value (pF)	Voltage (V)	Tol (+/-%)	Finish (@)	(FRL)(#)	(FRL)(#)	Manufacturer
CDR32BP6R2B%@#	6.2	100	B, C, D	S, M, N, U	S	P, R	AVX, KEM VIT
CDR32BP6R8B%@#	6.8	100	B, C, D	S, M, N, U	S	P, R	AVX, KEM VIT
CDR32BP7R5B%@#	7.5	100	B, C, D	S, M, N, U	S	P, R	AVX, KEM VIT
CDR32BP8R2B%@#	8.2	100	B, C, D	S, M, N, U	S	P, R	AVX, KEM, VIT
CDR32BP9R1B%@#	9.1	100	B, C, D	S, M, N, U	S	P, R	AVX, KEM, VIT
CDR32BP100B%@#	10	100	F, J, K	S, M, N, U	S	P, R	AVX, KEM, VIT
CDR32BP110B%@#	11	100	F, J, K	S, M, N, U	S	P, R	AVX, KEM, VIT
CDR32BP120B%@#	12	100	F, J, K	S, M, N, U	S	P, R	AVX, KEM, VIT
CDR32BP130B%@#	13	100	F, J, K	S, M, N, U	S	P, R	AVX, KEM, VIT
	Cap.	Rated	Cap.	Termination	Level 1	Level 2	
Part Number	Value (pF)	Voltage (V)	Tol (+/-%)	Finish (@)	(FRL)(#)	(FRL)(#)	Manufacturer
CDR32BP150B%@#	15	100	F, J, K	S, M, N, U	S	P, R	AVX, KEM, VIT
CDR32BP160B%@#	16	100	F, J, K	S, M, N, U	S	P, R	AVX, KEM, VIT
CDR32BP180B%@#	18	100	F, J, K	S, M, N, U	S	P, R	AVX, KEM, VIT
CDR32BP200B%@#	20	100	F, J, K	S, M, N, U	S	P, R	AVX, KEM, VIT
CDR32BP220B%@#	22	100	F, J, K	S, M, N, U	S	P, R	AVX, KEM, VIT
CDR32BP240B%@#	24	100	F, J, K	S, M, N, U	S	P, R	AVX, KEM, VIT
CDR32BP270B%@#	27	100	F, J, K	S, M, N, U	S	P, R	AVX, KEM VIT
CDR32BP300B%@#	30	100	F, J, K	S, M, N, U	S	P, R	AVX, KEM VIT
CDR32BP330B%@#	33	100	F, J, K	S, M, N, U	S	P, R	AVX, KEM VIT
	Cap.	Rated	Cap.	Termination	Level 1	Level 2	
Part Number	Value (pF)	Voltage (V)	Tol (+/-%)	Finish (@)	(FRL)(#)	(FRL)(#)	Manufacturer
CDR32BP360B%@#	36	100	F, J, K	S, M, N, U	S	P, R	AVX, KEM, VIT
CDR32BP390B%@#	39	100	F, J, K	S, M, N, U	S	P, R	AVX, KEM, VIT
CDR32BP430B%@#	43	100	F, J, K	S, M, N, U	S	P, R	AVX, KEM, VIT
CDR32BP470B%@#	47	100	F, J, K	S, M, N, U	S	P, R	AVX, KEM, VIT
CDR32BP510B%@#	51	100	F, J, K	S, M, N, U	S	P, R	AVX, KEM, VIT
CDR32BP560B%@#	56	100	F, J, K	S, M, N, U	S	P, R	AVX, KEM, VIT
CDR32BP620B%@#	62	100	F, J, K	S, M, N, U	S	P, R	AVX, KEM, VIT
CDR32BP680B%@#	68	100	F, J, K	S, M, N, U	S	P, R	AVX, KEM, VIT
CDR32BP750B%@#	75	100	F, J, K	S, M, N, U	S	P, R	AVX, KEM, VIT
	Cap.	Rated	Cap.	Termination	Level 1	Level 2	
Part Number	Value (pF)	Voltage (V)	Tol (+/-%)	Finish (@)	(FRL)(#)	(FRL)(#)	Manufacturer
CDR32BP820B%@#	82	100	F, J, K	S, M, N, U	S	P, R	AVX, KEM, VIT
CDR32BP910B%@#	91	100	F, J, K	S, M, N, U	S	P, R	AVX, KEM, VIT
CDR32BP101B%@#	100	100	F, J, K	S, M, N, U	S	P, R	AVX, KEM VIT
CDR32BP111B%@#	110	100	F, J, K	S, M, N, U	S	P, R	AVX, KEM VIT
CDR32BP121B%@#	120	100	F, J, K	S, M, N, U	S	P, R	AVX, KEM, VIT
CDR32BP131B%@#	130	100	F, J, K	S, M, N, U	S	P, R	AVX, KEM, VIT
CDR32BP151B%@#	150	100	F, J, K	S, M, N, U	S	P, R	AVX, KEM, VIT
CDR32BP161B%@#	160	100	F, J, K	S, M, N, U	S	P, R	AVX, KEM, VIT
CDR32BP181B%@#	180	100	F, J, K	S, M, N, U	S	P, R	AVX, KEM, VIT
	Cap.	Rated	Cap.	Termination	Level 1	Level 2	

Part Number	Value (pF)	Voltage (V)	Tol (+/-%)	Finish (@)	(FRL)(#)	(FRL)(#)	Manufacturer
CDR32BP201B%@#	200	100	F, J, K	S, M, N, U	S	P, R	AVX, KEM, VIT
CDR32BP221B%@#	220	100	F, J, K	S, M, N, U	S	P, R	AVX, KEM, VIT
CDR32BP241B%@#	240	100	F, J, K	S, M, N, U	S	P, R	AVX, KEM, VIT
CDR32BP271B%@#	270	100	F, J, K	S, M, N, U	S	P, R	AVX, KEM, VIT
CDR32BP301B%@#	300	100	F, J, K	S, M, N, U	S	P, R	AVX, KEM, VIT
CDR32BP331B%@#	330	100	F, J, K	S, M, N, U	S	P, R	AVX, KEM, VIT
CDR32BP361B%@#	360	100	F, J, K	S, M, N, U	S	P, R	AVX, KEM, VIT
CDR32BP391B%@#	390	100	F, J, K	S, M, N, U	S	P, R	AVX, KEM, VIT
CDR32BP431B%@#	430	100	F, J, K	S, M, N, U	S	P, R	AVX, KEM, VIT
	Cap.	Rated	Cap.	Termination	Level 1	Level 2	
Part Number	Value (pF)	Voltage (V)	Tol (+/-%)	Finish (@)	(FRL)(#)	(FRL)(#)	Manufacturer
CDR32BP471B%@#	470	100	F, J, K	S, M, N, U	S	P, R	AVX, KEM, VIT
CDR32BP511B%@#	510	100	F, J, K	S, M, N, U	S	P, R	AVX, KEM, VIT
CDR32BP561B%@#	560	100	F, J, K	S, M, N, U	S	P, R	AVX, KEM, VIT
CDR32BP621B%@#	620	100	F, J, K	S, M, N, U	S	P, R	AVX, KEM, VIT
CDR32BP681B%@#	680	100	F, J, K	S, M, N, U	S	P, R	AVX, KEM, VIT
CDR32BP751B%@#	750	100	F, J, K	S, M, N, U	S	P, R	AVX, KEM, VIT
CDR32BP821B%@#	820	100	F, J, K	S, M, N, U	S	P, R	AVX, KEM, VIT
CDR32BP911B%@#	910	100	F, J, K	S, M, N, U	S	P, R	AVX, KEM, VIT
CDR32BP102B%@#	1000	100	F, J, K	S, M, N, U	S	P, R	AVX, KEM, VIT
	Cap.	Rated	Cap.	Termination	Level 1	Level 2	
Part Number	Value (pF)	Voltage (V)	Tol (+/-%)	Finish (@)	(FRL)(#)	(FRL)(#)	Manufacturer
CDR32BP112A%@#	1100	50	F, J, K	S, M, N, U	S	P, R	AVX, KEM, VIT
CDR32BP122A%@#	1200	50	F, J, K	S, M, N, U	S	P, R	AVX, KEM, VIT
CDR32BP132A%@#	1300	50	F, J, K	S, M, N, U	S	P, R	AVX, KEM, VIT
CDR32BP152A%@#	1500	50	F, J, K	S, M, N, U	S	P, R	AVX, KEM, VIT
CDR32BP162A%@#	1600	50	F, J, K	S, M, N, U	S	P, R	AVX, KEM, VIT
CDR32BP182A%@#	1800	50	F, J, K	S, M, N, U	S	P, R	AVX, KEM, VIT
CDR32BP202A%@#	2000	50	F, J, K	S, M, N, U	S	P, R	AVX, KEM, VIT
CDR32BP222A%@#	2200	50	F, J, K	S, M, N, U	S	P, R	AVX, KEM, VIT
CDR32BX472B%@#	4700	100	K, M	S, M, N, U	S	P, R	AVX, KEM, VIT
	Cap.	Rated	Cap.	Termination	Level 1	Level 2	
Part Number	Value (pF)	Voltage (V)	Tol (+/-%)	Finish (@)	(FRL)(#)	(FRL)(#)	Manufacturer
CDR32BX562B%@#	5600	100	K, M	S, M, N, U	S	P, R	AVX, KEM, VIT
CDR32BX682B%@#	6800	100	K, M	S, M, N, U	S	P, R	AVX, KEM, VIT
CDR32BX822B%@#	8200	100	K, M	S, M, N, U	S	P, R	AVX, KEM, VIT
CDR32BX103B%@#	10000	100	K, M	S, M, N, U	S	P, R	AVX, KEM, VIT
CDR32BX123B%@#	12000	100	K, M	S, M, N, U	S	P, R	AVX, KEM, VIT
CDR32BX153B%@#	15000	100	K, M	S, M, N, U	S	P, R	AVX, KEM, VIT
CDR32BX183A%@#	18000	50	K, M	S, M, N, U	S	P, R	AVX, KEM, VIT
CDR32BX223A%@#	22000	50	K, M	S, M, N, U	S	P, R	AVX, KEM, VIT
CDR32BX273A%@#	27000	50	K, M	S, M, N, U	S	P, R	AVX, KEM, VIT
	Cap.	Rated	Cap.	Termination	Level 1	Level 2	
Part Number	Value (pF)	Voltage (V)	Tol (+/-%)	Finish (@)	(FRL)(#)	(FRL)(#)	Manufacturer
CDR32BX333A%@#	33000	50	K, M	S, M, N, U	S	P, R	AVX, KEM, VIT
CDR32BX393A%@#	39000	50	K, M	S, M, N, U	S	P, R	AVX, KEM, VIT

CDR33 Ceramic Chip Capacitors

	Cap.	Rated	Cap.	Termination	Level 1	Level 2	
Part Number	Value (pF)	Voltage (V)	Tol (+/-%)	Finish (@)	(FRL)(#)	(FRL)(#)	Manufacturer
CDR33BP102B%@#	1000	100	F, J, K	S, M, N, U	S	P, R	AVX, KEM, VIT
CDR33BP112B%@#	1100	100	F, J, K	S, M, N, U	S	P, R	AVX, KEM, VIT
CDR33BP122B%@#	1200	100	F, J, K	S, M, N, U	S	P, R	AVX, KEM, VIT
CDR33BP132B%@#	1300	100	F, J, K	S, M, N, U	S	P, R	AVX, KEM, VIT
CDR33BP152B%@#	1500	100	F, J, K	S, M, N, U	S	P, R	AVX, KEM, VIT
CDR33BP162B%@#	1600	100	F, J, K	S, M, N, U	S	P, R	AVX, KEM, VIT
CDR33BP182B%@#	1800	100	F, J, K	S, M, N, U	S	P, R	AVX, KEM, VIT
CDR33BP202B%@#	2000	100	F, J, K	S, M, N, U	S	P, R	AVX, KEM, VIT
CDR33BP222B%@#	2200	100	F, J, K	S, M, N, U	S	P, R	AVX, KEM, VIT
CDR33BP242A%@#	2400	50	F, J, K	S, M, N, U	S	P, R	AVX, KEM, VIT
	Cap.	Rated	Cap.	Termination	Level 1	Level 2	
Part Number	Value (pF)	Voltage (V)	Tol (+/-%)	Finish (@)	(FRL)(#)	(FRL)(#)	Manufacturer
CDR33BP272A%@#	2700	50	F, J, K	S, M, N, U	S	P, R	AVX, KEM, VIT
CDR33BP302A%@#	3000	50	F, J, K	S, M, N, U	S	P, R	AVX, KEM, VIT
CDR33BP332A%@#	3300	50	F, J, K	S, M, N, U	S	P, R	AVX, KEM, VIT
CDR33BX153B%@#	15000	100	K, M	S, M, N, U	S	P, R	AVX, KEM, VIT
CDR33BX183B%@#	18000	100	K, M	S, M, N, U	S	P, R	AVX, KEM, VIT
CDR33BX223B%@#	22000	100	K, M	S, M, N, U	S	P, R	AVX, KEM, VIT
CDR33BX273B%@#	27000	100	K, M	S, M, N, U	S	P, R	AVX, KEM, VIT
CDR33BX393A%@#	39000	50	K, M	S, M, N, U	S	P, R	AVX, KEM, VIT
CDR33BX473A%@#	47000	50	K, M	S, M, N, U	S	P, R	AVX, KEM, VIT
	Cap.	Rated	Cap.	Termination	Level 1	Level 2	
Part Number	Value (pF)	Voltage (V)	ol (+/-%)	Finish (@)	(FRL)(#)	(FRL)(#)	Manufacturer
CDR33BX563A%@#	56000	50	K, M	S, M, N, U	S	P, R	AVX, KEM VIT
CDR33BX683A%@#	68000	50	K, M	S, M, N, U	S	P, R	AVX, KEM VIT
CDR33BX823A%@#	82000	50	K, M	S, M, N, U	S	P, R	AVX, KEM VIT
CDR33BX104A%@#	100000	50	K, M	S, M, N, U	S	P, R	AVX, KEM VIT

CDR34 Ceramic Chip Capacitors

	Cap.	Rated	Cap.	Termination	Level 1	Level 2	
Part Number	Value (pF)	Voltage (V)	Tol (+/-%)	Finish (@)	(FRL)(#)	(FRL)(#)	Manufacturer
CDR34BP222B%@#	2200	100	F, J, K	S, M, N, U	S	P, R	AVX, KEM, VIT
CDR34BP242B%@#	2400	100	F, J, K	S, M, N, U	S	P, R	AVX, KEM, VIT
CDR34BP272B%@#	2700	100	F, J, K	S, M, N, U	S	P, R	AVX, KEM, VIT
CDR34BP302B%@#	3000	100	F, J, K	S, M, N, U	S	P, R	AVX, KEM, VIT
CDR34BP332B%@#	3300	100	F, J, K	S, M, N, U	S	P, R	AVX, KEM, VIT
CDR34BP362B%@#	3600	100	F, J, K	S, M, N, U	S	P, R	AVX, KEM, VIT
CDR34BP392B%@#	3900	100	F, J, K	S, M, N, U	S	P, R	AVX, KEM, VIT

CDR34BP432B%@#	4300	100	F, J, K	S, M, N, U	S	P, R	AVX, KEM, VIT
CDR34BP472B%@#	4700	100	F, J, K	S, M, N, U	S	P, R	AVX, KEM, VIT
CDR34BP512A%@#	5100	50	F, J, K	S, M, N, U	S	P, R	AVX, KEM, VIT
	Cap.	Rated	Cap.	Termination	Level 1	Level 2	
Part Number	Value (pF)	Voltage (V)	Tol (+/-%)	Finish (@)	(FRL)(#)	(FRL)(#)	Manufacturer
CDR34BP562A%@#	5600	50	F, J, K	S, M, N, U	S	P, R	AVX, KEM, VIT
CDR34BP622A%@#	6200	50	F, J, K	S, M, N, U	S	P, R	AVX, KEM, VIT
CDR34BP682A%@#	6800	50	F, J, K	S, M, N, U	S	P, R	AVX, KEM, VIT
CDR34BP752A%@#	7500	50	F, J, K	S, M, N, U	S	P, R	AVX, KEM, VIT
CDR34BP822A%@#	8200	50	F, J, K	S, M, N, U	S	P, R	AVX, KEM, VIT
CDR34BP912A%@#	9100	50	F, J, K	S, M, N, U	S	P, R	AVX, KEM, VIT
CDR34BP103A%@#	10000	50	F, J, K	S, M, N, U	S	P, R	AVX, KEM, VIT
CDR34BX273B%@#	27000	100	K, M	S, M, N, U	S	P, R	AVX, KEM, VIT
CDR34BX333B%@#	33000	100	K, M	S, M, N, U	S	P, R	AVX, KEM, VIT
	Cap.	Rated	Cap.	Termination	Level 1	Level 2	
Part Number	Value (pF)	Voltage (V)	Tol (+/-%)	Finish (@)	(FRL)(#)	(FRL)(#)	Manufacturer
CDR34BX393B%@#	39000	100	K, M	S, M, N, U	S	P, R	AVX, KEM, VIT
CDR34BX473B%@#	47000	100	K, M	S, M, N, U	S	P, R	AVX, KEM, VIT
CDR34BX563B%@#	56000	100	K, M	S, M, N, U	S	P, R	AVX, KEM, VIT
CDR34BX104A%@#	100000	50	K, M	S, M, N, U	S	P, R	AVX, KEM, VIT
CDR34BX124A%@#	120000	50	K, M	S, M, N, U	S	P, R	AVX, KEM, VIT
CDR34BX154A%@#	150000	50	K, M	S, M, N, U	S	P, R	AVX, KEM, VIT
CDR34BX184A%@#	180000	50	K, M	S, M, N, U	S	P, R	AVX, KEM, VIT

CDR35 Ceramic Chip Capacitors

	Cap.	Rated	Cap.	Termination	Level 1	Level 2	
Part Number	Value (pF)	Voltage (V)	Tol (+/-%)	Finish (@)	(FRL)(#)	(FRL)(#)	Manufacturer
CDR35BP472B%@#	4700	100	F, J, K	S, M, N, U	S	P, R	AVX, KEM, VIT
CDR35BP512B%@#	5100	100	F, J, K	S, M, N, U	S	P, R	AVX, KEM, VIT
CDR35BP562B%@#	5600	100	F, J, K	S, M, N, U	S	P, R	AVX, KEM, VIT
CDR35BP622B%@#	6200	100	F, J, K	S, M, N, U	S	P, R	AVX, KEM, VIT
CDR35BP682B%@#	6800	100	F, J, K	S, M, N, U	S	P, R	AVX, KEM, VIT
CDR35BP752B%@#	7500	100	F, J, K	S, M, N, U	S	P, R	AVX, KEM, VIT
CDR35BP822B%@#	8200	100	F, J, K	S, M, N, U	S	P, R	AVX, KEM, VIT
CDR35BP912B%@#	9100	100	F, J, K	S, M, N, U	S	P, R	AVX, KEM, VIT
CDR35BP103B%@#	10000	100	F, J, K	S, M, N, U	S	P, R	AVX, KEM, VIT
CDR35BP113A%@#	11000	50	F, J, K	S, M, N, U	S	P, R	AVX, KEM, VIT
	Cap.	Rated	Cap.	Termination	Level 1	Level 2	
Part Number	Value (pF)	Voltage (V)	Tol (+/-%)	Finish (@)	(FRL)(#)	(FRL)(#)	Manufacturer
CDR35BP123A%@#	12000	50	F, J, K	S, M, N, U	S	P, R	AVX, KEM, VIT
CDR35BP133A%@#	13000	50	F, J, K	S, M, N, U	S	P, R	AVX, KEM, VIT
CDR35BP153A%@#	15000	50	F, J, K	S, M, N, U	S	P, R	AVX, KEM, VIT
CDR35BP163A%@#	16000	50	F, J, K	S, M, N, U	S	P, R	AVX, KEM, VIT
CDR35BP183A%@#	18000	50	F, J, K	S, M, N, U	S	P, R	AVX, KEM, VIT

CDR35BP203A%@#	20000	50	F, J, K	S, M, N, U	S	P, R	AVX, KEM, VIT
CDR35BP223A%@#	22000	50	F, J, K	S, M, N, U	S	P, R	AVX, KEM, VIT
CDR35BX563B%@#	56000	100	K, M	S, M, N, U	S	P, R	AVX, KEM, VIT
CDR35BX683B%@#	68000	100	K, M	S, M, N, U	S	P, R	AVX, KEM, VIT
	Cap.	Rated	Cap.	Termination	Level 1	Level 2	
Part Number	Value (pF)	Voltage (V)	Tol (+/-%)	Finish (@)	(FRL)(#)	(FRL)(#)	Manufacturer
CDR35BX823B%@#	82000	100	K, M	S, M, N, U	S	P, R	AVX, KEM, VIT
CDR35BX104B%@#	100000	100	K, M	S, M, N, U	S	P, R	AVX, KEM, VIT
CDR35BX124B%@#	120000	100	K, M	S, M, N, U	S	P, R	AVX, KEM, VIT
CDR35BX154B%@#	150000	100	K, M	S, M, N, U	S	P, R	AVX, KEM, VIT
CDR35BX184A%@#	180000	50	K, M	S, M, N, U	S	P, R	AVX, KEM, VIT
CDR35BX224A%@#	220000	50	K, M	S, M, N, U	S	P, R	AVX, KEM, VIT
CDR35BX274A%@#	270000	50	K, M	S, M, N, U	S	P, R	AVX, KEM, VIT
CDR35BX334A%@#	330000	50	K, M	S, M, N, U	S	P, R	AVX, KEM, VIT
CDR35BX394A%@#	390000	50	K, M	S, M, N, U	S	P, R	AVX, KEM, VIT
	Cap.	Rated	Cap.	Termination	Level 1	Level 2	
Part Number	Value (pF)	Voltage (V)	Tol (+/-%)	Finish (@)	(FRL)(#)	(FRL)(#)	Manufacturer
CDR35BX474A%@#	470000	50	K, M	S, M, N, U	S	P, R	AVX, KEM, VIT

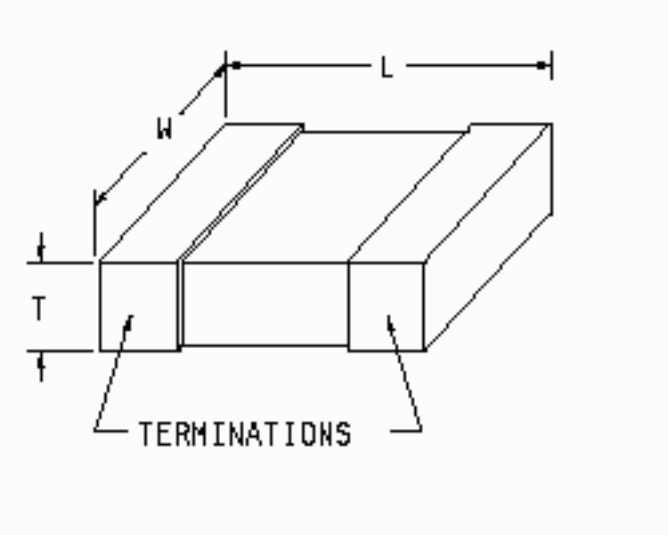

Physical Dimensions Table

Metric size chips have millimeters in parentheses.

All other sizes are in inches.

			Length (inches)			Width (inches)			Thickness (inches)
CDR	Nominal	Tol. Bare Chip	Tol. Solder Coated	Nominal	Tol. Bare Chip	Tol. Solder Coated	Minimum	Maximum	Max. Solder Coated
01	0.080	+/-0.015	+0.035, -0.015	0.050	+/-0.015	+0.030, -0.015	0.022	0.055	0.070
02	0.180	+/-0.015	+0.040, -0.015	0.050	+/-0.015	+0.030, -0.015	0.022	0.055	0.070
03	0.180	+/-0.015	+0.040, -0.015	0.080	+/-0.015	+0.030, -0.015	0.022	0.080	0.095
04	0.180	+/-0.015	+0.040, -0.015	0.125	+/-0.015	+0.030, -0.015	0.022	0.080	0.095
05	0.180	+0.020, -0.015	+0.045, -0.015	0.250	+0.020, -0.015	+0.035, -0.015	0.020	0.080	0.095
06	0.225	+/-0.020	+/-0.045	0.250	+/-0.020	+/-0.035	0.020	0.080	0.095
11	0.055	+/-0.015	N/A	0.055	+/-0.015	N/A	0.020	0.057	N/A
12	0.055	+/-0.015	N/A	0.055	+/-0.015	N/A	0.020	0.057	N/A
13	0.110	+/-0.020	N/A	0.110	+/-0.020	N/A	0.030	0.102	N/A
14	0.110	+0.035, -0.020	N/A	0.110	+/-0.020	N/A	0.030	0.102	N/A
31	0.078(2.00)	+/-0.008(0.2)	+0.031(0.8), -0.008(0.2)	0.049(1.25)	+/-0.008(0.2)	+0.020(0.5), -0.008(0.2)	N/A	0.051(1.3)	0.063(1.6)
32	0.125(3.20)	+/-0.008(0.2)	+0.031(0.8), -0.008(0.2)	0.062(1.60)	+/-0.008(0.2)	+0.020(0.5), -0.008(0.2)	N/A	0.051(1.3)	0.063(1.6)
33	0.125(3.20)	+/-0.010(0.25)	+0.033(0.85), -0.010(0.25)	0.098(2.50)	+/-0.010(0.25)	+0.022(0.55), -0.010(0.25)	N/A	0.059(1.5)	0.071(1.8)
34	0.176(4.50)	+/-0.010(0.25)	+0.033(0.85), -0.010(0.25)	0.125(3.20)	+/-0.010(0.25)	+0.022(0.55), -0.010(0.25)	N/A	0.059(1.5)	0.071(1.8)
35	0.176(4.50)	+/-0.012(0.3)	+0.035(0.9), -0.012(0.3)	0.250(6.40)	+/-0.012(0.3)	+0.024(0.6), -0.012(0.3)	N/A	0.059(1.5)	0.071(1.8)

(Summary)

Diodes

Transistors

Thermistors

Wire and Cable

Tantalum Capacitors

The following tantalum capacitor specifications are available for selection:

Military Specification	Generic Designator	Description
MIL-PRF-39003	CSR, CSS Styles	Fixed, Tantalum, (Solid) Electrolytic
MIL-PRF-39006	CLR Style	Fixed, Tantalum, (Non- Solid) Electrolytic
MIL-PRF-55365	CWR Style	Fixed, Tantalum, Chip

Parts

|

Packaging

|

Radiation

|

Publications

|

Calendar

|

Experts

Admin Login

|

Request Account

|

Feedback

|

Site Map

|

Help

|

Search

NEPP Program Manager:

Chuck Barnes, Jet Propulsion Laboratory

Responsible NASA Official:

Michael Sampson, NEPAG Manager

Website Comments:

Web Development Team

Last Modified:

August 8, 2001

AETD IT Security Banner

NASA Privacy Statement

Tantalum Capacitor Manufacturer Listing

Listed below are links to manufacturer data sites that may provide additional part related information. The linked sites are not under the control of NPSL and NASA is not responsible for information contained in the linked site. We are providing these links for your convenience only.

AVX

AVX Tantalum Corporation

69 Landry Street

Biddeford, ME 04005

CAGE Code: 17554

Tel.: (207) 282-5111

KEM

Kemet Electronics Corporation

2835 Kemet Way

Simpsonville, SC 29681

CAGE Code: 31433

Tel.: (803) 963-6300

MAL

(Vishay) Mallory

P.O. Box 489 1701 Indianapolis Road

Greencastle, IN 46153

CAGE Code: 37942

Tel.: (317) 653-3151

SPR

Vishay Sprague

P.O. Box 231 Lower Main Street

Sanford, ME 04073

CAGE Code: 2N936

Tel.: (207) 324-4140

TAN

Vishay Tansitor

P.O. Box 230 West Road

Bennington, VT 05201

CAGE Code: 05079

Tel.: (802) 442-5473

MIL-PRF-39003, CAPACITORS

Fixed, Tantalum, Electrolytic (Solid Electrolyte), Polarized, Established Reliability

CSR Styles

Part Number/Ordering Explanation

Important! Application Notes

Revision History for MIL-PRF-39003 Listing in the NPSL

Last Revision: 03/11/03

Click on the link below to see the associated parts selection listing:

Style	Detail Specification	Description
CSR13	MIL-PRF-39003/1	Axial Lead, Hermetically Sealed, Sleeved 0.0047 uF to 4.7 uF (50 V) See More...
CSR09	MIL-PRF-39003/2	Axial Lead, Hermetically Sealed, Sleeved 2.7 uF to 18 uF (6 V) 1.8 uF to 15 uF (10 V) 1.0 uF to 8.2 uF (15 V) 0.56 uF to 6.8 uF (20 V) 0.33 uF to 2.7 uF (35 V) 0.22 uF t
CSR33	MIL-PRF-39003/6	Axial, Lead, Hermetically Sealed, Sleeved 10 uF to 1000 uF (6 V) 6.8 uF to 560 uF (10 V) 4.7 uF to 330 uF (15 V) 2.7 uF to 180 uF (20 V) 1.8 uF to 68 uF (35 V) 1.2 uF to 39
CSR21	MIL-PRF-39003/9	Axial Lead, Hermetically Sealed, Sleeved 150 uF to 330 uF (6 V) 82 uF to 220 uF (10 V) 56 uF to 150 uF (15 V) 27 uF to 100 uF (20 V) 22 uF to 47 uF (35 V) 5.6 uF to 22 uF (5
CSS13	MIL-PRF-39003/10	Axial Lead, Hermetically Sealed 5.6 uF to 330 uF (6 V) 3.9 uF to 220 uF (10 V) 2.7 uF to 150 uF (15 V) 1.2 uF to 100 uF (20 V) 5.6 uF to 47 uF (35 V) 0.12 uF to 22 uF (50 V)
CSS33	MIL-PRF-39003/10	Axial Lead, Hermetically Sealed 10 uF to 1000 uF (6 V) 6.8 uF to 560 uF (10 V) 4.7 uF to 330 uF (15 V) 2.7 uF to 180 uF (20 V) 1.8 uF to 65 uF (35 V) 1.2 uF to 39 uF (50 V)

APPLICATION NOTES FOR MIL-PRF-39003

1) Solid tantalum capacitors are subject to inrush current failures. Effective series resistance for MIL-PRF-39003 capacitors should be at least 0.3 ohms/volt or 1 ohm whichever is greater, for Level 1 applications and at least 0.1 ohms/volt or 1 ohm whichever is greater, for Level 2 applications. MIL-PRF-39003 capacitors should not be used in power supply filters. MIL-PRF-39006/22 (CLR79) or MIL-PRF-39006/25 (CLR81) style parts are preferred for power supplies.

2) Parts covered by this specification contain internal soldered connections which may reflow during installation. The A, A1, B, B1 case sizes are particularly susceptible and special precautions such as heat sinking are recommended when soldering onto boards.

3) For Level 1 applications all CSR13 and CSR09 capacitors should be subjected to the surge current test as specified by MIL-PRF-39003/10 (surge current testing at -55deg.C, +25deg.C and +85deg.C). For Level 2 applications all CSR13 and CSR09 capacitors should be subjected to the surge current test as specified by MIL-PRF-39003/9 (surge current testing at +25deg.C). For Level 3 applications all CSR13 and CSR09 capacitors used in single point failure or mission critical locations should be subjected to the surge current testing as specified by MIL-PRF-39003/9 (surge current testing at +25deg.C).

4) M39003 style capacitors rated at 100 V and higher are NOT recommended for use and are therefore NOT listed within the NPSL. Historically, the NPSL has NOT listed capacitors with these ratings. In order to produce the higher voltage ratings the manufacturers use alternate process steps compared to the lower voltage styles. These alternate process steps have not been found to consistently produce reliable parts.

5) These tantalum capacitors are polar devices that are sensitive to reverse bias voltage

. Prolonged exposure to high levels of reverse voltage can produce very high leakage currents and short circuits. Short circuited tantalum capacitors can ignite and/or produce excessive heat resulting in extreme damage to circuit boards. Reverse bias application of these parts should be avoided. MIL-PRF-39003 offers no guidance on the reverse bias performance of these capacitors. Capacitor manufacturer guidelines are generally very conservative urging against any prolonged exposure to reverse bias. Some limited experimental data exists that suggests some capacitors may be able to indefinitely withstand room temperature reverse voltages on the order of 15 to 25% of rated voltage. However, all of the factors affecting the reverse bias behavior (including size and rating of the capacitor, effects of circuit current limiting and ambient temperature) have not been studied. Refer to NEPAG Lesson Learned Bulletin

NEPAG-LLB-2001-002

and NEPAG Study Report "

Reverse Bias Behavior of Surface Mount Solid Tantalum Capacitors"

for further details.

6)

Users are urged to carefully confirm the proper orientation of all tantalum capacitors after installation. The convention for polarity markings is often a source of potential confusion.

Historically, reverse polarity failures have been observed that resulted from:

Incorrect initial installation (part installed backwards)

Incorrect installation during rework (original part installed correctly, but replacement part put in backwards)

Correct circuit design, but incorrect artwork on the printed wiring board (part installed correctly according to the artwork, but actually in backwards)

Incorrect circuit design (printed wiring board artwork correct per circuit layout, but design error resulted in part in backwards)

Part marking for

MIL-PRF-39003/10 tubular case capacitors requires a stripe on the case adjacent to the

cathode ("-") termination

. This convention can be a source for confusion because the surface mount molded tantalum "chip" capacitors (CWR09 types per MIL-PRF-55365/4) frequently use a stripe on the case to identify the anode ("+") termination. Generally, the other styles of tubular case tantalum capacitors use a "+" to identify the anode terminal.

Refer to NEPAG Lesson Learned Bulletin

NEPAG-LLB-2001-002

for further details

Revision History for MIL-PRF-39003 Listing in the NPSL

03/11/03	Added application Notes 6 to warn of the potential for installing these parts backwards with emphasis on M39003/10 styles.
04/29/02	Added application Note 5 discussing the polarity sensitivity of these part types.
06/26/01	Added M39003/6 CSR33 capacitor styles. This style capacitor has been used frequently in NASA missions and was previously left off of this listing because similar Space Grade parts have been available
06/26/01	Updated available failure rate level listings to include Weibull "D" where available from existing qualified sources
06/26/01	Updated slash sheets 2, 9 and 10 to include tolerances and voltage intermediate voltage ratings not previously listed
06/26/01	Added application note to explain the reason why parts rated at 100V and above are considered reliability suspect.
01/11/99	Dimensional drawings were added
07/01/98	Correction to the CSR13 parts listing. M39003/01-7164 and M39003/01-6164 are 0.1 uF parts. Table had incorrectly listed them as 0.182 uF.
12/01/97	Made changes indicating the specification conversion to a performance specification (MIL-PRF-39003 instead of MIL-C-39003).
05/01/97	Initial Release of MIL-C-39003 Section in the NPSL

Part Number Ordering Information, example and explanation:

M39003/10-3009S where,

M39003	/10	-3009
Military Specification Number	Detail Specification Number	Four-digit dash number which uniquely identifies the capacitance, tolerance, rated dc voltage, dc leakage, dissipation factor and failure rate level

Part number ordering options are developed using the following criteria:

Style	Detail Specification Sheet	Available Tolerances		Failure Rate Levels
CSR13	MIL-PRF-39003/1	10%		B = 0.1%/1000 hours (Level 2)
CSR09	MIL-PRF-39003/2	10%, 20%		C = 0.01%/1000 hours (Level 1)
CSR21	MIL-PRF-39003/9	5%, 10%, 20%		
CSS13	MIL-PRF-39003/10	10%		
CSS33	MIL-PRF-39003/10	10%		

Part Number	Cap. Value (uF)	Rated Voltage (V)	Cap. Tol (+/- %)	Case Size	Level 1 (FRL)	Level 2 (FRL)	Manufacturer
M39003/02-2001	2.7	6	5	A1		B	KEM
M39003/02-3001	2.7	6	5	A1	C		KEM
M39003/02-4001	2.7	6	5	A1	D		KEM
M39003/02-2002	2.7	6	10	A1		B	KEM
M39003/02-3002	2.7	6	10	A1	C		KEM
M39003/02-4002	2.7	6	10	A1	D		KEM
M39003/02-2003	18	6	5	B1		B	KEM
M39003/02-3003	18	6	5	B1	C		KEM
M39003/02-4003	18	6	5	B1	D		KEM
M39003/02-2004	18	6	10	B1		B	KEM
M39003/02-3004	18	6	10	B1	C		KEM
M39003/02-4004	18	6	10	B1	D		KEM
M39003/02-2006	1.8	10	5	A1		B	KEM
M39003/02-3006	1.8	10	5	A1	C		KEM
M39003/02-4006	1.8	10	5	A1	D		KEM
M39003/02-2007	2.2	10	5	A1		B	KEM
M39003/02-3007	2.2	10	5	A1	C		KEM
M39003/02-4007	2.2	10	5	A1	D		KEM
M39003/02-2008	2.2	10	10	A1		B	KEM
M39003/02-3008	2.2	10	10	A1	C		KEM
M39003/02-4008	2.2	10	10	A1	D		KEM
M39003/02-2009	10	10	5	B1		B	KEM
M39003/02-3009	10	10	5	B1	C		KEM
M39003/02-4009	10	10	5	B1	D		KEM
M39003/02-2010	10	10	10	B1		B	KEM
M39003/02-3010	10	10	10	B1	C		KEM
M39003/02-4010	10	10	10	B1	D		KEM
M39003/02-2011	12	10	5	B1		B	KEM
M39003/02-3011	12	10	5	B1	C		KEM
M39003/02-4011	12	10	5	B1	D		KEM
M39003/02-2012	12	10	10	B1		B	KEM
M39003/02-3012	12	10	10	B1	C		KEM
M39003/02-4012	12	10	10	B1	D		KEM
M39003/02-2013	15	10	5	B1		B	KEM
M39003/02-3013	15	10	5	B1	C		KEM
M39003/02-4013	15	10	5	B1	D		KEM
M39003/02-2014	15	10	10	B1		B	KEM
M39003/02-3014	15	10	10	B1	C		KEM
M39003/02-4014	15	10	10	B1	D		KEM
M39003/02-2015	1.0	15	5	A1		B	KEM
M39003/02-3015	1.0	15	5	A1	C		KEM
M39003/02-4015	1.0	15	5	A1	D		KEM

M39003/02-2016	1.0	15	10	A1		B	KEM
M39003/02-3016	1.0	15	10	A1	C		KEM
M39003/02-4016	1.0	15	10	A1	D		KEM
M39003/02-2017	1.2	15	5	A1		B	KEM
M39003/02-3017	1.2	15	5	A1	C		KEM
M39003/02-4017	1.2	15	5	A1	D		KEM
M39003/02-2018	1.2	15	10	A1		B	KEM
M39003/02-3018	1.2	15	10	A1	C		KEM
M39003/02-4018	1.2	15	10	A1	D		KEM
M39003/02-2019	1.5	15	5	A1		B	KEM
M39003/02-3019	1.5	15	5	A1	C		KEM
M39003/02-4019	1.5	15	5	A1	D		KEM
M39003/02-2020	1.5	15	10	A1		B	KEM
M39003/02-3020	1.5	15	10	A1	C		KEM
M39003/02-4020	1.5	15	10	A1	D		KEM
M39003/02-2021	8.2	15	5	B1		B	KEM
M39003/02-3021	8.2	15	5	B1	C		KEM
M39003/02-4021	8.2	15	5	B1	D		KEM
M39003/02-2022	8.2	15	10	B1		B	KEM
M39003/02-3022	8.2	15	10	B1	C		KEM
M39003/02-4022	8.2	15	10	B1	D		KEM
M39003/02-2023	0.56	20	5	A1		B	KEM
M39003/02-3023	0.56	20	5	A1	C		KEM
M39003/02-4023	0.56	20	5	A1	D		KEM
M39003/02-2024	0.56	20	10	A1		B	KEM
M39003/02-3024	0.56	20	10	A1	C		KEM
M39003/02-4024	0.56	20	10	A1	D		KEM
M39003/02-2025	0.68	20	5	A1		B	KEM
M39003/02-3025	0.68	20	5	A1	C		KEM
M39003/02-4025	0.68	20	5	A1	D		KEM
M39003/02-2026	0.68	20	10	A1		B	KEM
M39003/02-3026	0.68	20	10	A1	C		KEM
M39003/02-4026	0.68	20	10	A1	D		KEM
M39003/02-2027	0.82	20	5	A1		B	KEM
M39003/02-3027	0.82	20	5	A1	C		KEM
M39003/02-4027	0.82	20	5	A1	D		KEM
M39003/02-2028	0.82	20	10	A1		B	KEM
M39003/02-3028	0.82	20	10	A1	C		KEM
M39003/02-4028	0.82	20	10	A1	D		KEM
M39003/02-2029	1.0	20	5	A1		B	KEM
M39003/02-3029	1.0	20	5	A1	C		KEM
M39003/02-4029	1.0	20	5	A1	D		KEM
M39003/02-2030	1.0	20	10	A1		B	KEM
M39003/02-3030	1.0	20	10	A1	C		KEM
M39003/02-4030	1.0	20	10	A1	D		KEM
M39003/02-2031	3.3	20	5	B1		B	KEM
M39003/02-3031	3.3	20	5	B1	C		KEM

M39003/02-4031	3.3	20	5	B1	D		KEM
M39003/02-2032	3.3	20	10	B1		B	KEM
M39003/02-3032	3.3	20	10	B1	C		KEM
M39003/02-4032	3.3	20	10	B1	D		KEM
M39003/02-2033	3.9	20	5	B1		B	KEM
M39003/02-3033	3.9	20	5	B1	C		KEM
M39003/02-4033	3.9	20	5	B1	D		KEM
M39003/02-2034	3.9	20	10	B1		B	KEM
M39003/02-3034	3.9	20	10	B1	C		KEM
M39003/02-4034	3.9	20	10	B1	D		KEM
M39003/02-2035	4.7	20	5	B1		B	KEM
M39003/02-3035	4.7	20	5	B1	C		KEM
M39003/02-4035	4.7	20	5	B1	D		KEM
M39003/02-2036	4.7	20	10	B1		B	KEM
M39003/02-3036	4.7	20	10	B1	C		KEM
M39003/02-4036	4.7	20	10	B1	D		KEM
M39003/02-2037	5.6	20	5	B1		B	KEM
M39003/02-3037	5.6	20	5	B1	C		KEM
M39003/02-4037	5.6	20	5	B1	D		KEM
M39003/02-2038	5.6	20	10	B1		B	KEM
M39003/02-3038	5.6	20	10	B1	C		KEM
M39003/02-4038	5.6	20	10	B1	D		KEM
M39003/02-2039	6.8	20	5	B1		B	KEM
M39003/02-3039	6.8	20	5	B1	C		KEM
M39003/02-4039	6.8	20	5	B1	D		KEM
M39003/02-2040	6.8	20	10	B1		B	KEM
M39003/02-3040	6.8	20	10	B1	C		KEM
M39003/02-4040	6.8	20	10	B1	D		KEM
M39003/02-2041	0.33	35	5	A1		B	KEM
M39003/02-3041	0.33	35	5	A1	C		KEM
M39003/02-4041	0.33	35	5	A1	D		KEM
M39003/02-2042	0.33	35	10	A1		B	KEM
M39003/02-3042	0.33	35	10	A1	C		KEM
M39003/02-4042	0.33	35	10	A1	D		KEM
M39003/02-2043	0.39	35	5	A1		B	KEM
M39003/02-3043	0.39	35	5	A1	C		KEM
M39003/02-4043	0.39	35	5	A1	D		KEM
M39003/02-2044	0.39	35	10	A1		B	KEM
M39003/02-3044	0.39	35	10	A1	C		KEM
M39003/02-4044	0.39	35	10	A1	D		KEM
M39003/02-2045	0.47	35	5	A1		B	KEM
M39003/02-3045	0.47	35	5	A1	C		KEM
M39003/02-4045	0.47	35	5	A1	D		KEM
M39003/02-2046	0.47	35	10	A1		B	KEM
M39003/02-3046	0.47	35	10	A1	C		KEM
M39003/02-4046	0.47	35	10	A1	D		KEM
M39003/02-2047	2.2	35	5	B1		B	KEM

M39003/02-3047	2.2	35	5	B1	C		KEM
M39003/02-4047	2.2	35	5	B1	D		KEM
M39003/02-2048	2.2	35	10	B1		B	KEM
M39003/02-3048	2.2	35	10	B1	C		KEM
M39003/02-4048	2.2	35	10	B1	D		KEM
M39003/02-2049	2.7	35	5	B1		B	KEM
M39003/02-3049	2.7	35	5	B1	C		KEM
M39003/02-4049	2.7	35	5	B1	D		KEM
M39003/02-2050	2.7	35	10	B1		B	KEM
M39003/02-3050	2.7	35	10	B1	C		KEM
M39003/02-4050	2.7	35	10	B1	D		KEM
M39003/02-2051	0.22	50	5	A1		B	KEM
M39003/02-3051	0.22	50	5	A1	C		KEM
M39003/02-4051	0.22	50	5	A1	D		KEM
M39003/02-2052	0.22	50	10	A1		B	KEM
M39003/02-3052	0.22	50	10	A1	C		KEM
M39003/02-4052	0.22	50	10	A1	D		KEM
M39003/02-2053	0.27	50	5	A1		B	KEM
M39003/02-3053	0.27	50	5	A1	C		KEM
M39003/02-4053	0.27	50	5	A1	D		KEM
M39003/02-2054	0.27	50	10	A1		B	KEM
M39003/02-3054	0.27	50	10	A1	C		KEM
M39003/02-4054	0.27	50	10	A1	D		KEM
M39003/02-2055	1.5	50	5	B1		B	KEM
M39003/02-3055	1.5	50	5	B1	C		KEM
M39003/02-4055	1.5	50	5	B1	D		KEM
M39003/02-2056	1.5	50	10	B1		B	KEM
M39003/02-3056	1.5	50	10	B1	C		KEM
M39003/02-4056	1.5	50	10	B1	D		KEM
M39003/02-2057	1.8	50	5	B1		B	KEM
M39003/02-3057	1.8	50	5	B1	C		KEM
M39003/02-4057	1.8	50	5	B1	D		KEM
M39003/02-2058	1.8	50	10	B1		B	KEM
M39003/02-3058	1.8	50	10	B1	C		KEM
M39003/02-4058	1.8	50	10	B1	D		KEM
M39003/02-2059	0.047	75	5	A1		B	KEM
M39003/02-3059	0.047	75	5	A1	C		KEM
M39003/02-4059	0.047	75	5	A1	D		KEM
M39003/02-2060	0.047	75	10	A1		B	KEM
M39003/02-3060	0.047	75	10	A1	C		KEM
M39003/02-4060	0.047	75	10	A1	D		KEM
M39003/02-2061	0.056	75	5	A1		B	KEM
M39003/02-3061	0.056	75	5	A1	C		KEM
M39003/02-4061	0.056	75	5	A1	D		KEM
M39003/02-2062	0.056	75	10	A1		B	KEM
M39003/02-3062	0.056	75	10	A1	C		KEM
M39003/02-4062	0.056	75	10	A1	D		KEM

M39003/02-2063	0.068	75	5	A1		B	KEM
M39003/02-3063	0.068	75	5	A1	C		KEM
M39003/02-4063	0.068	75	5	A1	D		KEM
M39003/02-2064	0.068	75	10	A1		B	KEM
M39003/02-3064	0.068	75	10	A1	C		KEM
M39003/02-4064	0.068	75	10	A1	D		KEM
M39003/02-2065	0.082	75	5	A1		B	KEM
M39003/02-3065	0.082	75	5	A1	C		KEM
M39003/02-4065	0.082	75	5	A1	D		KEM
M39003/02-2066	0.082	75	10	A1		B	KEM
M39003/02-3066	0.082	75	10	A1	C		KEM
M39003/02-4066	0.082	75	10	A1	D		KEM
M39003/02-2067	0.1	75	5	A1		B	KEM
M39003/02-3067	0.1	75	5	A1	C		KEM
M39003/02-4067	0.1	75	5	A1	D		KEM
M39003/02-2068	0.1	75	10	A1		B	KEM
M39003/02-3068	0.1	75	10	A1	C		KEM
M39003/02-4068	0.1	75	10	A1	D		KEM
M39003/02-2069	0.12	75	5	A1		B	KEM
M39003/02-3069	0.12	75	5	A1	C		KEM
M39003/02-4069	0.12	75	5	A1	D		KEM
M39003/02-2070	0.12	75	10	A1		B	KEM
M39003/02-3070	0.12	75	10	A1	C		KEM
M39003/02-4070	0.12	75	10	A1	D		KEM
M39003/02-2071	0.15	75	5	A1		B	KEM
M39003/02-3071	0.15	75	5	A1	C		KEM
M39003/02-4071	0.15	75	5	A1	D		KEM
M39003/02-2072	0.15	75	10	A1		B	KEM
M39003/02-3072	0.15	75	10	A1	C		KEM
M39003/02-4072	0.15	75	10	A1	D		KEM
M39003/02-2073	0.18	75	5	A1		B	KEM
M39003/02-3073	0.18	75	5	A1	C		KEM
M39003/02-4073	0.18	75	5	A1	D		KEM
M39003/02-2074	0.18	75	10	A1		B	KEM
M39003/02-3074	0.18	75	10	A1	C		KEM
M39003/02-4074	0.18	75	10	A1	D		KEM
M39003/02-2075	0.22	75	5	B1		B	KEM
M39003/02-3075	0.22	75	5	B1	C		KEM
M39003/02-4075	0.22	75	5	B1	D		KEM
M39003/02-2076	0.22	75	10	B1		B	KEM
M39003/02-3076	0.22	75	10	B1	C		KEM
M39003/02-4076	0.22	75	10	B1	D		KEM
M39003/02-2077	0.27	75	5	B1		B	KEM
M39003/02-3077	0.27	75	5	B1	C		KEM
M39003/02-4077	0.27	75	5	B1	D		KEM
M39003/02-2078	0.27	75	10	B1		B	KEM
M39003/02-3078	0.27	75	10	B1	C		KEM

M39003/02-4078	0.27	75	10	B1	D		KEM
M39003/02-2079	0.33	75	5	B1		B	KEM
M39003/02-3079	0.33	75	5	B1	C		KEM
M39003/02-4079	0.33	75	5	B1	D		KEM
M39003/02-2080	0.33	75	10	B1		B	KEM
M39003/02-3080	0.33	75	10	B1	C		KEM
M39003/02-4080	0.33	75	10	B1	D		KEM
M39003/02-2081	0.39	75	5	B1		B	KEM
M39003/02-3081	0.39	75	5	B1	C		KEM
M39003/02-4081	0.39	75	5	B1	D		KEM
M39003/02-2082	0.39	75	10	B1		B	KEM
M39003/02-3082	0.39	75	10	B1	C		KEM
M39003/02-4082	0.39	75	10	B1	D		KEM
M39003/02-2083	0.47	75	5	B1		B	KEM
M39003/02-3083	0.47	75	5	B1	C		KEM
M39003/02-4083	0.47	75	5	B1	D		KEM
M39003/02-2084	0.47	75	10	B1		B	KEM
M39003/02-3084	0.47	75	10	B1	C		KEM
M39003/02-4084	0.47	75	10	B1	D		KEM
M39003/02-2085	0.56	75	5	B1		B	KEM
M39003/02-3085	0.56	75	5	B1	C		KEM
M39003/02-4085	0.56	75	5	B1	D		KEM
M39003/02-2086	0.56	75	10	B1		B	KEM
M39003/02-3086	0.56	75	10	B1	C		KEM
M39003/02-4086	0.56	75	10	B1	D		KEM
M39003/02-2087	0.68	75	5	B1		B	KEM
M39003/02-3087	0.68	75	5	B1	C		KEM
M39003/02-4087	0.68	75	5	B1	D		KEM
M39003/02-2088	0.68	75	10	B1		B	KEM
M39003/02-3088	0.68	75	10	B1	C		KEM
M39003/02-4088	0.68	75	10	B1	D		KEM
M39003/02-2091	0.82	75	5	B1		B	KEM
M39003/02-3091	0.82	75	5	B1	C		KEM
M39003/02-4091	0.82	75	5	B1	D		KEM
M39003/02-2090	0.82	75	10	B1		B	KEM
M39003/02-3090	0.82	75	10	B1	C		KEM
M39003/02-4090	0.82	75	10	B1	D		KEM
M39003/02-2091	1.0	75	5	B1		B	KEM
M39003/02-3091	1.0	75	5	B1	C		KEM
M39003/02-4091	1.0	75	5	B1	D		KEM
M39003/02-2092	1.0	75	10	B1		B	KEM
M39003/02-3092	1.0	75	10	B1	C		KEM
M39003/02-4092	1.0	75	10	B1	D		KEM
M39003/02-2093	1.2	75	5	B1		B	KEM
M39003/02-3093	1.2	75	5	B1	C		KEM
M39003/02-4093	1.2	75	5	B1	D		KEM
M39003/02-2094	1.2	75	10	B1		B	KEM

M39003/02-3094	1.2	75	10	B1	C		KEM
M39003/02-4094	1.2	75	10	B1	D		KEM
	Cap.	Rated	Cap.	Case	Level 1	Level 2	
Part Number	Value (uF)	Voltage (V)	Tol (+/- %)	Size	(FRL)	(FRL)	Manufacturer

Style CSR09

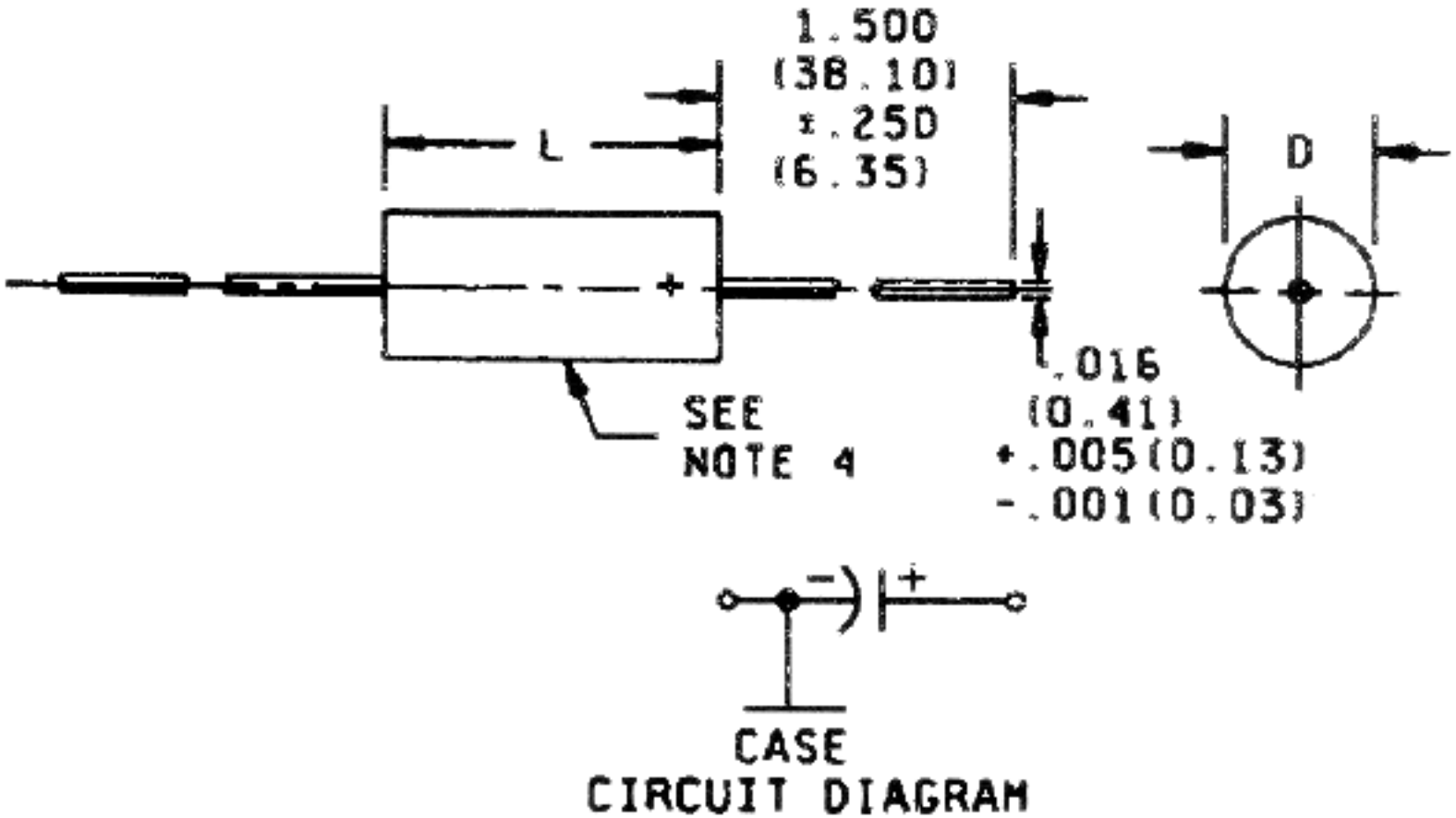

Dimensions

	L	L	L	D	D	D
Case Size	Min	Nom	Max	Min	Nom	Max
A1	0.235 (5.97)	0.250 (6.35)	0.281 (7.14)	0.081 (2.06)	0.090 (2.29)	0.099 (2.51)
B1	0.375 (9.52)	0.390 (9.91)	0.405 (10.29)	0.128 (3.25)	0.138 (3.51)	0.148 (3.76)

Notes:

1) Dimensions are in inches.

2) Metric equivalents are in parentheses and are given for general information only.

3) These capacitors are not intended to be mounted by their leads.

4) The case insulation shall extend 0.015 (0.38 mm) minimum beyond each end. However, when a shrink-fitted insulation is used, it shall lap over the ends of the capacitor body.

5) Lead length may be a minimum of 1 inch for use in tape and reel automatic insertion equipment, when specified.

CSR13 Solid Tantalum Capacitors

	Cap.	Rated	Cap.	Case	Level 1	Level 2	
Part Number	Value (uF)	Voltage (V)	Tol (+/- %)	Size	(FRL)	(FRL)	Manufacturer
M39003/01-7124	0.0047	50	10	A	C		KEM, SPR
M39003/01-6124	0.0047	50	10	A		B	KEM, SPR
M39003/01-7125	0.0047	50	20	A	C		KEM, SPR
M39003/01-6125	0.0047	50	20	A		B	KEM, SPR
M39003/01-7127	0.0056	50	10	A	C		KEM, SPR
M39003/01-6127	0.0056	50	10	A		B	KEM, SPR
M39003/01-7129	0.0068	50	10	A	C		KEM, SPR
M39003/01-6129	0.0068	50	10	A		B	KEM, SPR
M39003/01-7130	0.0068	50	20	A	C		KEM, SPR
M39003/01-6130	0.0068	50	20	A		B	KEM, SPR
M39003/01-7132	0.0082	50	10	A	C		KEM, SPR
M39003/01-6132	0.0082	50	10	A		B	KEM, SPR
M39003/01-7134	0.01	50	10	A	C		KEM, SPR
M39003/01-6134	0.01	50	10	A		B	KEM, SPR
M39003/01-7135	0.01	50	20	A	C		KEM, SPR
M39003/01-6135	0.01	50	20	A		B	KEM, SPR
M39003/01-7137	0.012	50	10	A	C		KEM, SPR
M39003/01-6137	0.012	50	10	A		B	KEM, SPR
	Cap.	Rated	Cap.	Case	Level 1	Level 2	
Part Number	Value (uF)	Voltage (V)	Tol (+/- %)	Size	(FRL)	(FRL)	Manufacturer
M39003/01-7139	0.015	50	10	A	C		KEM, SPR
M39003/01-6139	0.015	50	10	A		B	KEM, SPR
M39003/01-7140	0.015	50	20	A	C		KEM, SPR
M39003/01-6140	0.015	50	20	A		B	KEM, SPR
M39003/01-7142	0.018	50	10	A	C		KEM, SPR

M39003/01-6142	0.018	50	10	A		B	KEM, SPR
M39003/01-7144	0.022	50	10	A	C		KEM, SPR
M39003/01-6144	0.022	50	10	A		B	KEM, SPR
M39003/01-7145	0.022	50	20	A	C		KEM, SPR
M39003/01-6145	0.022	50	20	A		B	KEM, SPR
M39003/01-7147	0.027	50	10	A	C		KEM, SPR
M39003/01-6147	0.027	50	10	A		B	KEM, SPR
M39003/01-7149	0.033	50	10	A	C		KEM, SPR
M39003/01-6149	0.033	50	10	A		B	KEM, SPR
M39003/01-7150	0.033	50	20	A	C		KEM, SPR
M39003/01-6150	0.033	50	20	A		B	KEM, SPR
M39003/01-7152	0.039	50	10	A	C		KEM, SPR
M39003/01-6152	0.039	50	10	A		B	KEM, SPR
	Cap.	Rated	Cap.	Case	Level 1	Level 2	
Part Number	Value (uF)	Voltage (V)	Tol (+/- %)	Size	(FRL)	(FRL)	Manufacturer
M39003/01-7154	0.047	50	10	A	C		KEM, SPR
M39003/01-6154	0.047	50	10	A		B	KEM, SPR
M39003/01-7155	0.047	50	20	A	C		KEM, SPR
M39003/01-6155	0.047	50	20	A		B	KEM, SPR
M39003/01-7157	0.056	50	10	A	C		KEM, SPR
M39003/01-6157	0.056	50	10	A		B	KEM, SPR
M39003/01-7159	0.068	50	10	A	C		KEM, SPR
M39003/01-6159	0.068	50	10	A		B	KEM, SPR
M39003/01-7160	0.068	50	20	A	C		KEM, SPR
M39003/01-6160	0.068	50	20	A		B	KEM, SPR
M39003/01-7162	0.082	50	10	A	C		KEM, SPR
M39003/01-6162	0.082	50	10	A		B	KEM, SPR
M39003/01-7164	0.1	50	10	A	C		KEM, SPR
M39003/01-6164	0.1	50	10	A		B	KEM, SPR
M39003/01-7165	0.1	50	20	A	C		KEM, SPR
M39003/01-6165	0.1	50	20	A		B	KEM, SPR
M39003/01-7167	0.12	50	10	A	C		KEM, SPR
M39003/01-6167	0.12	50	10	A		B	KEM, SPR
	Cap.	Rated	Cap.	Case	Level 1	Level 2	
Part Number	Value (uF)	Voltage (V)	Tol (+/- %)	Size	(FRL)	(FRL)	Manufacturer
M39003/01-7169	0.15	50	10	A	C		KEM, SPR
M39003/01-6169	0.15	50	10	A		B	KEM, SPR
M39003/01-7170	0.15	50	20	A	C		KEM, SPR
M39003/01-6170	0.15	50	20	A		B	KEM, SPR
M39003/01-7172	0.18	50	10	A	C		KEM, SPR
M39003/01-6172	0.18	50	10	A		B	KEM, SPR
M39003/01-7174	0.22	50	10	A	C		KEM, SPR
M39003/01-6174	0.22	50	10	A		B	KEM, SPR
M39003/01-7175	0.22	50	20	A	C		KEM, SPR
M39003/01-6175	0.22	50	20	A		B	KEM, SPR
M39003/01-7177	0.27	50	10	A	C		KEM, SPR
M39003/01-6177	0.27	50	10	A		B	KEM, SPR

M39003/01-7179	0.33	50	10	A	C		KEM, SPR
M39003/01-6179	0.33	50	10	A		B	KEM, SPR
M39003/01-7180	0.33	50	20	A	C		KEM, SPR
M39003/01-6180	0.33	50	20	A		B	KEM, SPR
M39003/01-7182	0.39	50	10	A	C		KEM, SPR
M39003/01-6182	0.39	50	10	A		B	KEM, SPR
	Cap.	Rated	Cap.	Case	Level 1	Level 2	
Part Number	Value (uF)	Voltage (V)	Tol (+/- %)	Size	(FRL)	(FRL)	Manufacturer
M39003/01-7184	0.47	50	10	A	C		KEM, SPR
M39003/01-6184	0.47	50	10	A		B	KEM, SPR
M39003/01-7185	0.47	50	20	A	C		KEM, SPR
M39003/01-6185	0.47	50	20	A		B	KEM, SPR
M39003/01-7197	1.2	50	10	B	C		KEM, SPR
M39003/01-6197	1.2	50	10	B		B	KEM, SPR
M39003/01-7199	1.5	50	10	B	C		KEM, SPR
M39003/01-6199	1.5	50	10	B		B	KEM, SPR
M39003/01-7200	1.5	50	20	B	C		KEM, SPR
M39003/01-6200	1.5	50	20	B		B	KEM, SPR
M39003/01-7202	1.8	50	10	B	C		KEM, SPR
M39003/01-6202	1.8	50	10	B		B	KEM, SPR
M39003/01-7204	2.2	50	10	B	C		KEM, SPR
M39003/01-6204	2.2	50	10	B		B	KEM, SPR
M39003/01-7205	2.2	50	20	B	C		KEM, SPR
M39003/01-6205	2.2	50	20	B		B	KEM, SPR
M39003/01-7207	2.7	50	10	B	C		KEM, SPR
M39003/01-6207	2.7	50	10	B		B	KEM, SPR
	Cap.	Rated	Cap.	Case	Level 1	Level 2	
Part Number	Value (uF)	Voltage (V)	Tol (+/- %)	Size	(FRL)	(FRL)	Manufacturer
M39003/01-7209	3.3	50	10	B	C		KEM, SPR
M39003/01-6209	3.3	50	10	B		B	KEM, SPR
M39003/01-7210	3.3	50	20	B	C		KEM, SPR
M39003/01-6210	3.3	50	20	B		B	KEM, SPR
M39003/01-7212	3.9	50	10	B	C		KEM, SPR
M39003/01-6212	3.9	50	10	B		B	KEM, SPR
M39003/01-7214	4.7	50	10	B	C		KEM, SPR
M39003/01-6214	4.7	50	10	B		B	KEM, SPR
M39003/01-7215	4.7	50	20	B	C		KEM, SPR
M39003/01-6215	4.7	50	20	B		B	KEM, SPR
	Cap.	Rated	Cap.	Case	Level 1	Level 2	
Part Number	Value (uF)	Voltage (V)	Tol (+/- %)	Size	(FRL)	(FRL)	Manufacturer

Style CSR13

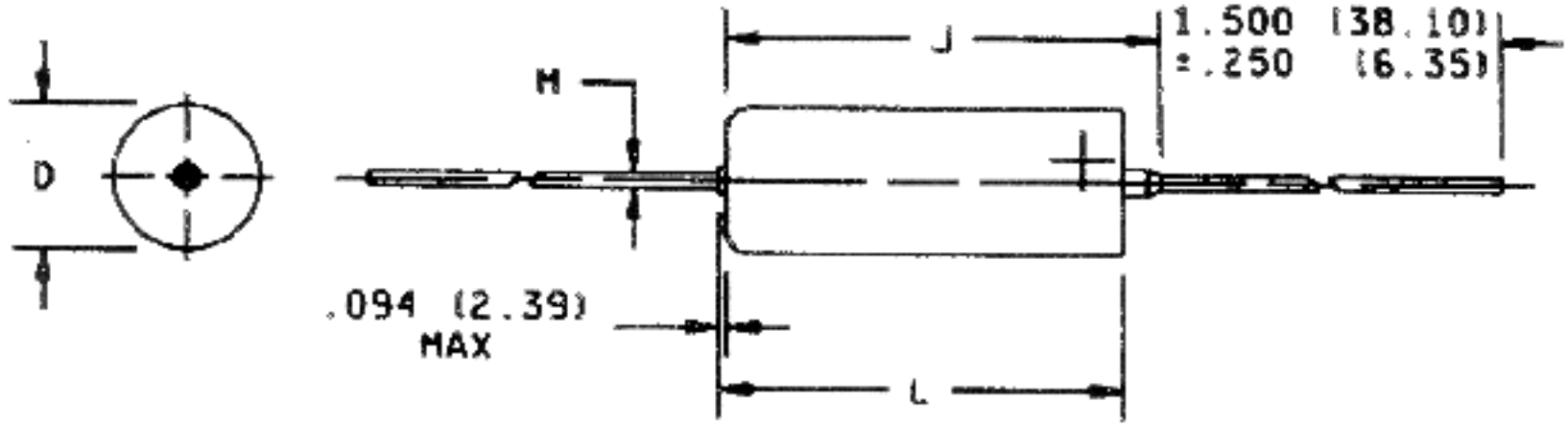

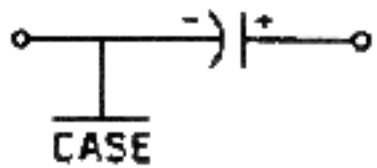

CIRCUIT DIAGRAM

Case Size	L+/-0.031 (0.79)	+0.016 (0.41) D -0.015 (0.38)	M+/-0.002 (0.05)	J Max
A	0.286 (7.26)	0.135 (3.43)	0.020 (0.51)	0.422 (10.72)
B	0.474 (12.04)	0.185 (4.70)	0.020 (0.51)	0.610 (15.49)
C	0.686 (17.42)	0.289 (7.34)	0.025 (0.64)	0.822 (20.88)
D	0.786 (19.96)	0.351 (8.92)	0.025 (0.64)	0.922 (23.42)

Notes:

1) Dimensions are in inches.

2) Metric equivalents are in parentheses and are given for general information only.

3) The case insulation shall extend 0.015 (0.38 mm) minimum beyond each end. However, when a shrink-fitted insulation is used, it shall lap over the ends of the capacitor body.

4) Lead length may be a minimum of 1 inch long for use in tape and reel automatic insertion equipment, when specified.

CSR21 Solid Tantalum Capacitors

	Cap.	Rated	Cap.	Case	Internal	Level 1	Level 2	
Part Number	Value (uF)	Voltage (V)	Tol (+/- %)	Size	Solder (*)	(FRL)	(FRL)	Manufacturer
M39003/09-2001*	150	6	5	C	Blank or H		B	KEM, SPR
M39003/09-3001*	150	6	5	C	Blank or H	C		KEM, SPR
M39003/09-4001*	150	6	5	C	Blank or H	D		KEM, SPR
M39003/09-2002*	150	6	10	C	Blank or H		B	KEM, SPR
M39003/09-3002*	150	6	10	C	Blank or H	C		KEM, SPR
M39003/09-4002*	150	6	10	C	Blank or H	D		KEM, SPR
M39003/09-2003*	150	6	20	C	Blank or H		B	KEM, SPR
M39003/09-3003*	150	6	20	C	Blank or H	C		KEM, SPR
M39003/09-4003*	150	6	20	C	Blank or H	D		KEM, SPR
M39003/09-2004*	180	6	5	C	Blank or H		B	KEM, SPR
M39003/09-3004*	180	6	5	C	Blank or H	C		KEM, SPR
M39003/09-4004*	180	6	5	C	Blank or H	D		KEM, SPR
	Cap.	Rated	Cap.	Case	Internal	Level 1	Level 2	
Part Number	Value (uF)	Voltage (V)	Tol (+/- %)	Size	Solder (*)	(FRL)	(FRL)	Manufacturer
M39003/09-2005*	180	6	10	C	Blank or H		B	KEM, SPR
M39003/09-3005*	180	6	10	C	Blank or H	C		KEM, SPR
M39003/09-4005*	180	6	10	C	Blank or H	D		KEM, SPR
M39003/09-2006*	270	6	5	D	Blank or H		B	KEM, SPR
M39003/09-3006*	270	6	5	D	Blank or H	C		KEM, SPR
M39003/09-4006*	270	6	5	D	Blank or H	D		KEM, SPR
M39003/09-2007*	270	6	10	D	Blank or H		B	KEM, SPR
M39003/09-3007*	270	6	10	D	Blank or H	C		KEM, SPR
M39003/09-4007*	270	6	10	D	Blank or H	D		KEM, SPR
M39003/09-2008*	330	6	5	D	Blank or H		B	KEM, SPR
M39003/09-3008*	330	6	5	D	Blank or H	C		KEM, SPR
M39003/09-4008*	330	6	5	D	Blank or H	D		KEM, SPR
M39003/09-2009*	330	6	10	D	Blank or H		B	KEM, SPR
	Cap.	Rated	Cap.	Case	Internal	Level 1	Level 2	
Part Number	Value (uF)	Voltage (V)	Tol (+/- %)	Size	Solder (*)	(FRL)	(FRL)	Manufacturer
M39003/09-3009*	330	6	10	D	Blank or H	C		KEM, SPR
M39003/09-4009*	330	6	10	D	Blank or H	D		KEM, SPR
M39003/09-2010*	330	6	20	D	Blank or H		B	KEM, SPR
M39003/09-3010*	330	6	20	D	Blank or H	C		KEM, SPR
M39003/09-4010*	330	6	20	D	Blank or H	D		KEM, SPR
M39003/09-2011*	82	10	5	C	Blank or H		B	KEM, SPR
M39003/09-3011*	82	10	5	C	Blank or H	C		KEM, SPR
M39003/09-4011*	82	10	5	C	Blank or H	D		KEM, SPR

M39003/09-2012*	82	10	10	C	Blank or H		B	KEM, SPR
M39003/09-3012*	82	10	10	C	Blank or H	C		KEM, SPR
M39003/09-4012*	82	10	10	C	Blank or H	D		KEM, SPR
M39003/09-2013*	100	10	5	C	Blank or H		B	KEM, SPR
M39003/09-3013*	100	10	5	C	Blank or H	C		KEM, SPR
M39003/09-4013*	100	10	5	C	Blank or H	D		KEM, SPR
	Cap.	Rated	Cap.	Case	Internal	Level 1	Level 2	
Part Number	Value (uF)	Voltage (V)	Tol (+/- %)	Size	Solder (*)	(FRL)	(FRL)	Manufacturer
M39003/09-2014*	100	10	10	C	Blank or H		B	KEM, SPR
M39003/09-3014*	100	10	10	C	Blank or H	C		KEM, SPR
M39003/09-4014*	100	10	10	C	Blank or H	D		KEM, SPR
M39003/09-2015*	100	10	20	C	Blank or H		B	KEM, SPR
M39003/09-3015*	100	10	20	C	Blank or H	C		KEM, SPR
M39003/09-4015*	100	10	20	C	Blank or H	D		KEM, SPR
M39003/09-2016*	120	10	5	C	Blank or H		B	KEM, SPR
M39003/09-3016*	120	10	5	C	Blank or H	C		KEM, SPR
M39003/09-4016*	120	10	5	C	Blank or H	D		KEM, SPR
M39003/09-2017*	120	10	10	C	Blank or H		B	KEM, SPR
M39003/09-3017*	120	10	10	C	Blank or H	C		KEM, SPR
M39003/09-4017*	120	10	10	C	Blank or H	D		KEM, SPR
M39003/09-2018*	180	10	5	D	Blank or H		B	KEM, SPR
M39003/09-3018*	180	10	5	D	Blank or H	C		KEM, SPR
M39003/09-4018*	180	10	5	D	Blank or H	D		KEM, SPR
	Cap.	Rated	Cap.	Case	Internal	Level 1	Level 2	
Part Number	Value (uF)	Voltage (V)	Tol (+/- %)	Size	Solder (*)	(FRL)	(FRL)	Manufacturer
M39003/09-2019*	180	10	10	D	Blank or H		B	KEM, SPR
M39003/09-3019*	180	10	10	D	Blank or H	C		KEM, SPR
M39003/09-4019*	180	10	10	D	Blank or H	D		KEM, SPR
M39003/09-2020*	220	10	5	D	Blank or H		B	KEM, SPR
M39003/09-3020*	220	10	5	D	Blank or H	C		KEM, SPR
M39003/09-4020*	220	10	5	D	Blank or H	D		KEM, SPR
M39003/09-2021*	220	10	10	D	Blank or H		B	KEM, SPR
M39003/09-3021*	220	10	10	D	Blank or H	C		KEM, SPR
M39003/09-4021*	220	10	10	D	Blank or H	D		KEM, SPR
M39003/09-2022*	220	10	20	D	Blank or H		B	KEM, SPR
M39003/09-3022*	220	10	20	D	Blank or H	C		KEM, SPR
M39003/09-4022*	220	10	20	D	Blank or H	D		KEM, SPR
	Cap.	Rated	Cap.	Case	Internal	Level 1	Level 2	
Part Number	Value (uF)	Voltage (V)	Tol (+/- %)	Size	Solder (*)	(FRL)	(FRL)	Manufacturer
M39003/09-2023*	56	15	5	C	Blank or H		B	KEM, SPR
M39003/09-3023*	56	15	5	C	Blank or H	C		KEM, SPR
M39003/09-4023*	56	15	5	C	Blank or H	D		KEM, SPR
M39003/09-2024*	56	15	10	C	Blank or H		B	KEM, SPR
M39003/09-3024*	56	15	10	C	Blank or H	C		KEM, SPR
M39003/09-4024*	56	15	10	C	Blank or H	D		KEM, SPR
M39003/09-2025*	68	15	5	C	Blank or H		B	KEM, SPR
M39003/09-3025*	68	15	5	C	Blank or H	C		KEM, SPR

M39003/09-4025*	68	15	5	C	Blank or H	D		KEM, SPR
M39003/09-2026*	68	15	10	C	Blank or H		B	KEM, SPR
M39003/09-3026*	68	15	10	C	Blank or H	C		KEM, SPR
M39003/09-4026*	68	15	10	C	Blank or H	D		KEM, SPR
M39003/09-2027*	68	15	20	C	Blank or H		B	KEM, SPR
M39003/09-3027*	68	15	20	C	Blank or H	C		KEM, SPR
M39003/09-4027*	68	15	20	C	Blank or H	D		KEM, SPR
	Cap.	Rated	Cap.	Case	Internal	Level 1	Level 2	
Part Number	Value (uF)	Voltage (V)	Tol (+/- %)	Size	Solder (*)	(FRL)	(FRL)	Manufacturer
M39003/09-2028*	120	15	5	D	Blank or H		B	KEM, SPR
M39003/09-3028*	120	15	5	D	Blank or H	C		KEM, SPR
M39003/09-4028*	120	15	5	D	Blank or H	D		KEM, SPR
M39003/09-2029*	120	15	10	D	Blank or H		B	KEM, SPR
M39003/09-3029*	120	15	10	D	Blank or H	C		KEM, SPR
M39003/09-4029*	120	15	10	D	Blank or H	D		KEM, SPR
M39003/09-2030*	150	15	5	D	Blank or H		B	KEM, SPR
M39003/09-3030*	150	15	5	D	Blank or H	C		KEM, SPR
M39003/09-4030*	150	15	5	D	Blank or H	D		KEM, SPR
M39003/09-2031*	150	15	10	D	Blank or H		B	KEM, SPR
M39003/09-3031*	150	15	10	D	Blank or H	C		KEM, SPR
M39003/09-4031*	150	15	10	D	Blank or H	D		KEM, SPR
	Cap.	Rated	Cap.	Case	Internal	Level 1	Level 2	
Part Number	Value (uF)	Voltage (V)	Tol (+/- %)	Size	Solder (*)	(FRL)	(FRL)	Manufacturer
M39003/09-2032*	150	15	20	D	Blank or H		B	KEM, SPR
M39003/09-3032*	150	15	20	D	Blank or H	C		KEM, SPR
M39003/09-4032*	150	15	20	D	Blank or H	D		KEM, SPR
M39003/09-2033*	27	20	5	C	Blank or H		B	KEM, SPR
M39003/09-3033*	27	20	5	C	Blank or H	C		KEM, SPR
M39003/09-4033*	27	20	5	C	Blank or H	D		KEM, SPR
M39003/09-2034*	27	20	10	C	Blank or H		B	KEM, SPR
M39003/09-3034*	27	20	10	C	Blank or H	C		KEM, SPR
M39003/09-4034*	27	20	10	C	Blank or H	D		KEM, SPR
M39003/09-2035*	33	20	5	C	Blank or H		B	KEM, SPR
M39003/09-3035*	33	20	5	C	Blank or H	C		KEM, SPR
M39003/09-4035*	33	20	5	C	Blank or H	D		KEM, SPR
M39003/09-2036*	33	20	10	C	Blank or H		B	KEM, SPR
M39003/09-3036*	33	20	10	C	Blank or H	C		KEM, SPR
M39003/09-4036*	33	20	10	C	Blank or H	D		KEM, SPR
	Cap.	Rated	Cap.	Case	Internal	Level 1	Level 2	
Part Number	Value (uF)	Voltage (V)	Tol (+/- %)	Size	Solder (*)	(FRL)	(FRL)	Manufacturer
M39003/09-2037*	33	20	20	C	Blank or H		B	KEM, SPR
M39003/09-3037*	33	20	20	C	Blank or H	C		KEM, SPR
M39003/09-4037*	33	20	20	C	Blank or H	D		KEM, SPR
M39003/09-2038*	39	20	5	C	Blank or H		B	KEM, SPR
M39003/09-3038*	39	20	5	C	Blank or H	C		KEM, SPR
M39003/09-4038*	39	20	5	C	Blank or H	D		KEM, SPR
M39003/09-2039*	39	20	10	C	Blank or H		B	KEM, SPR

M39003/09-3039*	39	20	10	C	Blank or H	C		KEM, SPR
M39003/09-4039*	39	20	10	C	Blank or H	D		KEM, SPR
M39003/09-2040*	47	20	5	C	Blank or H		B	KEM, SPR
M39003/09-3040*	47	20	5	C	Blank or H	C		KEM, SPR
M39003/09-4040*	47	20	5	C	Blank or H	D		KEM, SPR
	Cap.	Rated	Cap.	Case	Internal	Level 1	Level 2	
Part Number	Value (uF)	Voltage (V)	Tol (+/- %)	Size	Solder (*)	(FRL)	(FRL)	Manufacturer
M39003/09-2041*	47	20	10	C	Blank or H		B	KEM, SPR
M39003/09-3041*	47	20	10	C	Blank or H	C		KEM, SPR
M39003/09-4041*	47	20	10	C	Blank or H	D		KEM, SPR
M39003/09-2042*	47	20	20	C	Blank or H		B	KEM, SPR
M39003/09-3042*	47	20	20	C	Blank or H	C		KEM, SPR
M39003/09-4042*	47	20	20	C	Blank or H	D		KEM, SPR
M39003/09-2043*	56	20	5	D	Blank or H		B	KEM, SPR
M39003/09-3043*	56	20	5	D	Blank or H	C		KEM, SPR
M39003/09-4043*	56	20	5	D	Blank or H	D		KEM, SPR
M39003/09-2044*	56	20	10	D	Blank or H		B	KEM, SPR
M39003/09-3044*	56	20	10	D	Blank or H	C		KEM, SPR
M39003/09-4044*	56	20	10	D	Blank or H	D		KEM, SPR
	Cap.	Rated	Cap.	Case	Internal	Level 1	Level 2	
Part Number	Value (uF)	Voltage (V)	Tol (+/- %)	Size	Solder (*)	(FRL)	(FRL)	Manufacturer
M39003/09-2045*	68	20	5	D	Blank or H		B	KEM, SPR
M39003/09-3045*	68	20	5	D	Blank or H	C		KEM, SPR
M39003/09-4045*	68	20	5	D	Blank or H	D		KEM, SPR
M39003/09-2046*	68	20	10	D	Blank or H		B	KEM, SPR
M39003/09-3046*	68	20	10	D	Blank or H	C		KEM, SPR
M39003/09-4046*	68	20	10	D	Blank or H	D		KEM, SPR
M39003/09-2047*	68	20	20	D	Blank or H		B	KEM, SPR
M39003/09-3047*	68	20	20	D	Blank or H	C		KEM, SPR
M39003/09-4047*	68	20	20	D	Blank or H	D		KEM, SPR
M39003/09-2048*	82	20	5	D	Blank or H		B	KEM, SPR
M39003/09-3048*	82	20	5	D	Blank or H	C		KEM, SPR
M39003/09-4048*	82	20	5	D	Blank or H	D		KEM, SPR
M39003/09-2049*	82	20	10	D	Blank or H		B	KEM, SPR
M39003/09-3049*	82	20	10	D	Blank or H	C		KEM, SPR
M39003/09-4049*	82	20	10	D	Blank or H	D		KEM, SPR
	Cap.	Rated	Cap.	Case	Internal	Level 1	Level 2	
Part Number	Value (uF)	Voltage (V)	Tol (+/- %)	Size	Solder (*)	(FRL)	(FRL)	Manufacturer
M39003/09-2050*	100	20	5	D	Blank or H		B	KEM, SPR
M39003/09-3050*	100	20	5	D	Blank or H	C		KEM, SPR
M39003/09-4050*	100	20	5	D	Blank or H	D		KEM, SPR
M39003/09-2051*	100	20	10	D	Blank or H		B	KEM, SPR
M39003/09-3051*	100	20	10	D	Blank or H	C		KEM, SPR
M39003/09-4051*	100	20	10	D	Blank or H	D		KEM, SPR
M39003/09-2052*	100	20	20	D	Blank or H		B	KEM, SPR
M39003/09-3052*	100	20	20	D	Blank or H	C		KEM, SPR
M39003/09-4052*	100	20	20	D	Blank or H	D		KEM, SPR

M39003/09-2053*	22	35	5	C	Blank or H		B	KEM, SPR
M39003/09-3053*	22	35	5	C	Blank or H	C		KEM, SPR
M39003/09-4053*	22	35	5	C	Blank or H	D		KEM, SPR
	Cap.	Rated	Cap.	Case	Internal	Level 1	Level 2	
Part Number	Value (uF)	Voltage (V)	Tol (+/- %)	Size	Solder (*)	(FRL)	(FRL)	Manufacturer
M39003/09-2054*	22	35	10	C	Blank or H		B	KEM, SPR
M39003/09-3054*	22	35	10	C	Blank or H	C		KEM, SPR
M39003/09-4054*	22	35	10	C	Blank or H	D		KEM, SPR
M39003/09-2055*	22	35	20	C	Blank or H		B	KEM, SPR
M39003/09-3055*	22	35	20	C	Blank or H	C		KEM, SPR
M39003/09-4055*	22	35	20	C	Blank or H	D		KEM, SPR
M39003/09-2056*	27	35	5	D	Blank or H		B	KEM, SPR
M39003/09-3056*	27	35	5	D	Blank or H	C		KEM, SPR
M39003/09-4056*	27	35	5	D	Blank or H	D		KEM, SPR
M39003/09-2057*	27	35	10	D	Blank or H		B	KEM, SPR
M39003/09-3057*	27	35	10	D	Blank or H	C		KEM, SPR
M39003/09-4057*	27	35	10	D	Blank or H	D		KEM, SPR
M39003/09-2058*	33	35	5	D	Blank or H		B	KEM, SPR
M39003/09-3058*	33	35	5	D	Blank or H	C		KEM, SPR
M39003/09-4058*	33	35	5	D	Blank or H	D		KEM, SPR
	Cap.	Rated	Cap.	Case	Internal	Level 1	Level 2	
Part Number	Value (uF)	Voltage (V)	Tol (+/- %)	Size	Solder (*)	(FRL)	(FRL)	Manufacturer
M39003/09-2059*	33	35	10	D	Blank or H		B	KEM, SPR
M39003/09-3059*	33	35	10	D	Blank or H	C		KEM, SPR
M39003/09-4059*	33	35	10	D	Blank or H	D		KEM, SPR
M39003/09-2060*	33	35	20	D	Blank or H		B	KEM, SPR
M39003/09-3060*	33	35	20	D	Blank or H	C		KEM, SPR
M39003/09-4060*	33	35	20	D	Blank or H	D		KEM, SPR
M39003/09-2061*	39	35	5	D	Blank or H		B	KEM, SPR
M39003/09-3061*	39	35	5	D	Blank or H	C		KEM, SPR
M39003/09-4061*	39	35	5	D	Blank or H	D		KEM, SPR
M39003/09-2062*	39	35	10	D	Blank or H		B	KEM, SPR
M39003/09-3062*	39	35	10	D	Blank or H	C		KEM, SPR
M39003/09-4062*	39	35	10	D	Blank or H	D		KEM, SPR
	Cap.	Rated	Cap.	Case	Internal	Level 1	Level 2	
Part Number	Value (uF)	Voltage (V)	Tol (+/- %)	Size	Solder (*)	(FRL)	(FRL)	Manufacturer
M39003/09-2063*	47	35	5	D	Blank or H		B	KEM, SPR
M39003/09-3063*	47	35	5	D	Blank or H	C		KEM, SPR
M39003/09-4063*	47	35	5	D	Blank or H	D		KEM, SPR
M39003/09-2064*	47	35	10	D	Blank or H		B	KEM, SPR
M39003/09-3064*	47	35	10	D	Blank or H	C		KEM, SPR
M39003/09-4064*	47	35	10	D	Blank or H	D		KEM, SPR
M39003/09-2065*	47	35	20	D	Blank or H		B	KEM, SPR
M39003/09-3065*	47	35	20	D	Blank or H	C		KEM, SPR
M39003/09-4065*	47	35	20	D	Blank or H	D		KEM, SPR
M39003/09-2066*	5.6	50	5	C	Blank or H		B	KEM, SPR
M39003/09-3066*	5.6	50	5	C	Blank or H	C		KEM, SPR

M39003/09-4066*	5.6	50	5	C	Blank or H	D		KEM, SPR
M39003/09-2067*	5.6	50	10	C	Blank or H		B	KEM, SPR
M39003/09-3067*	5.6	50	10	C	Blank or H	C		KEM, SPR
M39003/09-4067*	5.6	50	10	C	Blank or H	D		KEM, SPR
	Cap.	Rated	Cap.	Case	Internal	Level 1	Level 2	
Part Number	Value (uF)	Voltage (V)	Tol (+/- %)	Size	Solder (*)	(FRL)	(FRL)	Manufacturer
M39003/09-2068*	6.8	50	5	C	Blank or H		B	KEM, SPR
M39003/09-3068*	6.8	50	5	C	Blank or H	C		KEM, SPR
M39003/09-4068*	6.8	50	5	C	Blank or H	D		KEM, SPR
M39003/09-2069*	6.8	50	10	C	Blank or H		B	KEM, SPR
M39003/09-3069*	6.8	50	10	C	Blank or H	C		KEM, SPR
M39003/09-4069*	6.8	50	10	C	Blank or H	D		KEM, SPR
M39003/09-2070*	6.8	50	20	C	Blank or H		B	KEM, SPR
M39003/09-3070*	6.8	50	20	C	Blank or H	C		KEM, SPR
M39003/09-4070*	6.8	50	20	C	Blank or H	D		KEM, SPR
M39003/09-2071*	8.2	50	5	C	Blank or H		B	KEM, SPR
M39003/09-3071*	8.2	50	5	C	Blank or H	C		KEM, SPR
M39003/09-4071*	8.2	50	5	C	Blank or H	D		KEM, SPR
	Cap.	Rated	Cap.	Case	Internal	Level 1	Level 2	
Part Number	Value (uF)	Voltage (V)	Tol (+/- %)	Size	Solder (*)	(FRL)	(FRL)	Manufacturer
M39003/09-2072*	8.2	50	10	C	Blank or H		B	KEM, SPR
M39003/09-3072*	8.2	50	10	C	Blank or H	C		KEM, SPR
M39003/09-4072*	8.2	50	10	C	Blank or H	D		KEM, SPR
M39003/09-2073*	10	50	5	C	Blank or H		B	KEM, SPR
M39003/09-3073*	10	50	5	C	Blank or H	C		KEM, SPR
M39003/09-4073*	10	50	5	C	Blank or H	D		KEM, SPR
M39003/09-2074*	10	50	10	C	Blank or H		B	KEM, SPR
M39003/09-3074*	10	50	10	C	Blank or H	C		KEM, SPR
M39003/09-4074*	10	50	10	C	Blank or H	D		KEM, SPR
M39003/09-2075*	10	50	20	C	Blank or H		B	KEM, SPR
M39003/09-3075*	10	50	20	C	Blank or H	C		KEM, SPR
M39003/09-4075*	10	50	20	C	Blank or H	D		KEM, SPR
M39003/09-2076*	12	50	5	C	Blank or H		B	KEM, SPR
M39003/09-3076*	12	50	5	C	Blank or H	C		KEM, SPR
M39003/09-4076*	12	50	5	C	Blank or H	D		KEM, SPR
	Cap.	Rated	Cap.	Case	Internal	Level 1	Level 2	
Part Number	Value (uF)	Voltage (V)	Tol (+/- %)	Size	Solder (*)	(FRL)	(FRL)	Manufacturer
M39003/09-2077*	12	50	10	C	Blank or H		B	KEM, SPR
M39003/09-3077*	12	50	10	C	Blank or H	C		KEM, SPR
M39003/09-4077*	12	50	10	C	Blank or H	D		KEM, SPR
M39003/09-2078*	15	50	5	C	Blank or H		B	KEM, SPR
M39003/09-3078*	15	50	5	C	Blank or H	C		KEM, SPR
M39003/09-4078*	15	50	5	C	Blank or H	D		KEM, SPR
M39003/09-2079*	15	50	10	C	Blank or H		B	KEM, SPR
M39003/09-3079*	15	50	10	C	Blank or H	C		KEM, SPR
M39003/09-4079*	15	50	10	C	Blank or H	D		KEM, SPR
M39003/09-2080*	15	50	20	C	Blank or H		B	KEM, SPR

M39003/09-3080*	15	50	20	C	Blank or H	C		KEM, SPR
M39003/09-4080*	15	50	20	C	Blank or H	D		KEM, SPR
	Cap.	Rated	Cap.	Case	Internal	Level 1	Level 2	
Part Number	Value (uF)	Voltage (V)	Tol (+/- %)	Size	Solder (*)	(FRL)	(FRL)	Manufacturer
M39003/09-2081*	18	50	5	C	Blank or H		B	KEM, SPR
M39003/09-3081*	18	50	5	C	Blank or H	C		KEM, SPR
M39003/09-4081*	18	50	5	C	Blank or H	D		KEM, SPR
M39003/09-2082*	18	50	10	C	Blank or H		B	KEM, SPR
M39003/09-3082*	18	50	10	C	Blank or H	C		KEM, SPR
M39003/09-4082*	18	50	10	C	Blank or H	D		KEM, SPR
M39003/09-2083*	22	50	5	D	Blank or H		B	KEM, SPR
M39003/09-3083*	22	50	5	D	Blank or H	C		KEM, SPR
M39003/09-4083*	22	50	5	D	Blank or H	D		KEM, SPR
M39003/09-2084*	22	50	10	D	Blank or H		B	KEM, SPR
M39003/09-3084*	22	50	10	D	Blank or H	C		KEM, SPR
M39003/09-4084*	22	50	10	D	Blank or H	D		KEM, SPR
M39003/09-2085*	22	50	20	D	Blank or H		B	KEM, SPR
M39003/09-3085*	22	50	20	D	Blank or H	C		KEM, SPR
M39003/09-4085*	22	50	20	D	Blank or H	D		KEM, SPR
	Cap.	Rated	Cap.	Case	Internal	Level 1	Level 2	
Part Number	Value (uF)	Voltage (V)	Tol (+/- %)	Size	Solder (*)	(FRL)	(FRL)	Manufacturer

Style CSR21

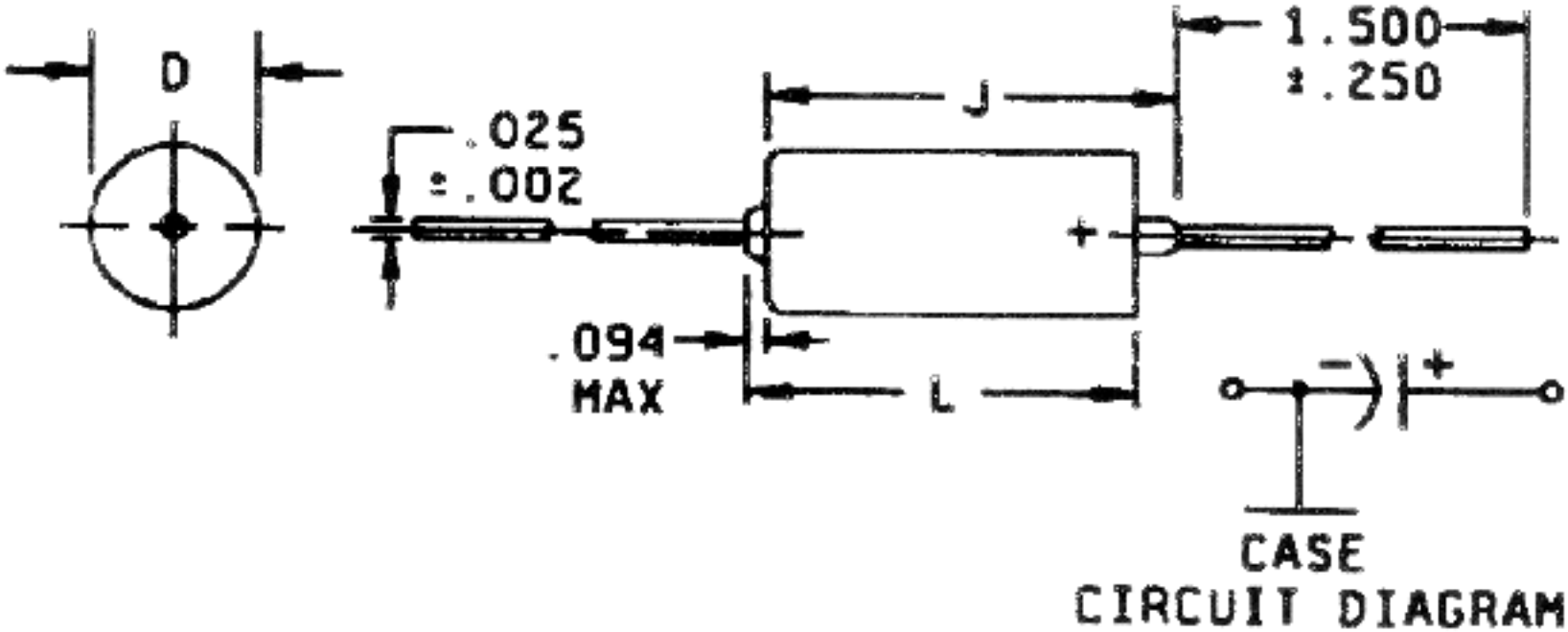

Dimensions

Case Size	L +/- 0.031 (0.79)	D + 0.016 (0.41) - 0.015 (0.38)	J max
C	0.686 (17.42)	0.289 (7.34)	0.822 (20.88)
D	0.786 (19.96)	0.351 (8.92)	0.922 (23.42)

Notes:

1) Dimensions are in inches.

2) Metric equivalents are in parentheses and are given for general information only.

3) The case insulation shall extend 0.015 (0.38 mm) minimum beyond each end. However, when a shrink-fitted insulation is used, it shall lap over the ends of the capacitor body.

4) Lead length may be a minimum of 1-inch long for use in tape and reel automatic insertion equipment, when specified.

5) Insulation thickness is included in dimension D.

Part Number	Cap. Value (uF)	Rated Voltage (V)	Cap. Tol (+/- %)	Case Size	Level 1 (FRL)	Level 2 (FRL)	Manufacturer
M39003/06-2001	10	6	10	A		B	KEM, SPR
M39003/06-3001	10	6	10	A	C		KEM, SPR
M39003/06-4001	10	6	10	A	D		KEM, SPR
M39003/06-2002	10	6	20	A		B	KEM, SPR
M39003/06-3002	10	6	20	A	C		KEM, SPR
M39003/06-4002	10	6	20	A	D		KEM, SPR
M39003/06-2003	12	6	10	A		B	KEM, SPR
M39003/06-3003	12	6	10	A	C		KEM, SPR
M39003/06-4003	12	6	10	A	D		KEM, SPR
M39003/06-2004	100	6	10	B		B	KEM, SPR
M39003/06-3004	100	6	10	B	C		KEM, SPR
M39003/06-4004	100	6	10	B	D		KEM, SPR
M39003/06-2005	100	6	20	B		B	KEM, SPR
M39003/06-3005	100	6	20	B	C		KEM, SPR
M39003/06-4005	100	6	20	B	D		KEM, SPR
M39003/06-2006	330	6	10	C		B	KEM, SPR
M39003/06-3006	330	6	10	C	C		KEM, SPR
M39003/06-4006	330	6	10	C	D		KEM, SPR
M39003/06-2007	330	6	20	C		B	KEM, SPR
M39003/06-3007	330	6	20	C	C		KEM, SPR
M39003/06-4007	330	6	20	C	D		KEM, SPR
M39003/06-2008	390	6	10	C		B	KEM, SPR
M39003/06-3008	390	6	10	C	C		KEM, SPR
M39003/06-4008	390	6	10	C	D		KEM, SPR
M39003/06-2009	470	6	10	C		B	KEM, SPR
M39003/06-3009	470	6	10	C	C		KEM, SPR
M39003/06-4009	470	6	10	C	D		KEM, SPR
M39003/06-2010	470	6	20	C		B	KEM, SPR
M39003/06-3010	470	6	20	C	C		KEM, SPR
M39003/06-4010	470	6	20	C	D		KEM, SPR
M39003/06-2011	680	6	10	D		B	KEM, SPR
M39003/06-3011	680	6	10	D	C		KEM, SPR
M39003/06-4011	680	6	10	D	D		KEM, SPR
M39003/06-2012	680	6	20	D		B	KEM, SPR
M39003/06-3012	680	6	20	D	C		KEM, SPR
M39003/06-4012	680	6	20	D	D		KEM, SPR
M39003/06-2013	820	6	10	D		B	KEM, SPR
M39003/06-3013	820	6	10	D	C		KEM, SPR
M39003/06-4013	820	6	10	D	D		KEM, SPR
M39003/06-2014	1000	6	10	D		B	KEM, SPR
M39003/06-3014	1000	6	10	D	C		KEM, SPR
M39003/06-4014	1000	6	10	D	D		KEM, SPR

M39003/06-2015	1000	6	20	D		B	KEM, SPR
M39003/06-3015	1000	6	20	D	C		KEM, SPR
M39003/06-4015	1000	6	20	D	D		KEM, SPR
M39003/06-2016	6.8	10	10	A		B	KEM, SPR
M39003/06-3016	6.8	10	10	A	C		KEM, SPR
M39003/06-4016	6.8	10	10	A	D		KEM, SPR
M39003/06-2017	6.8	10	20	A		B	KEM, SPR
M39003/06-3017	6.8	10	20	A	C		KEM, SPR
M39003/06-4017	6.8	10	20	A	D		KEM, SPR
M39003/06-2018	8.2	10	10	A		B	KEM, SPR
M39003/06-3018	8.2	10	10	A	C		KEM, SPR
M39003/06-4018	8.2	10	10	A	D		KEM, SPR
M39003/06-2019	47	10	10	B		B	KEM, SPR
M39003/06-3019	47	10	10	B	C		KEM, SPR
M39003/06-4019	47	10	10	B	D		KEM, SPR
M39003/06-2020	47	10	20	B		B	KEM, SPR
M39003/06-3020	47	10	20	B	C		KEM, SPR
M39003/06-4020	47	10	20	B	D		KEM, SPR
M39003/06-2021	56	10	10	B		B	KEM, SPR
M39003/06-3021	56	10	10	B	C		KEM, SPR
M39003/06-4021	56	10	10	B	D		KEM, SPR
M39003/06-2022	68	10	10	B		B	KEM, SPR
M39003/06-3022	68	10	10	B	C		KEM, SPR
M39003/06-4022	68	10	10	B	D		KEM, SPR
M39003/06-2023	68	10	20	B		B	KEM, SPR
M39003/06-3023	68	10	20	B	C		KEM, SPR
M39003/06-4023	68	10	20	B	D		KEM, SPR
M39003/06-2024	82	10	10	B		B	KEM, SPR
M39003/06-3024	82	10	10	B	C		KEM, SPR
M39003/06-4024	82	10	10	B	D		KEM, SPR
M39003/06-2025	220	10	10	C		B	KEM, SPR
M39003/06-3025	220	10	10	C	C		KEM, SPR
M39003/06-4025	220	10	10	C	D		KEM, SPR
M39003/06-2026	220	10	20	C		B	KEM, SPR
M39003/06-3026	220	10	20	C	C		KEM, SPR
M39003/06-4026	220	10	20	C	D		KEM, SPR
M39003/06-2027	270	10	10	C		B	KEM, SPR
M39003/06-3027	270	10	10	C	C		KEM, SPR
M39003/06-4027	270	10	10	C	D		KEM, SPR
M39003/06-2028	390	10	10	D		B	KEM, SPR
M39003/06-3028	390	10	10	D	C		KEM, SPR
M39003/06-4028	390	10	10	D	D		KEM, SPR
M39003/06-2029	470	10	10	D		B	KEM, SPR
M39003/06-3029	470	10	10	D	C		KEM, SPR
M39003/06-4029	470	10	10	D	D		KEM, SPR
M39003/06-2030	470	10	20	D		B	KEM, SPR
M39003/06-3030	470	10	20	D	C		KEM, SPR

M39003/06-4030	470	10	20	D	D		KEM, SPR
M39003/06-2031	560	10	10	D		B	KEM, SPR
M39003/06-3031	560	10	10	D	C		KEM, SPR
M39003/06-4031	560	10	10	D	D		KEM, SPR
M39003/06-2032	4.7	15	10	A		B	KEM, SPR
M39003/06-3032	4.7	15	10	A	C		KEM, SPR
M39003/06-4032	4.7	15	10	A	D		KEM, SPR
M39003/06-2033	4.7	15	20	A		B	KEM, SPR
M39003/06-3033	4.7	15	20	A	C		KEM, SPR
M39003/06-4033	4.7	15	20	A	D		KEM, SPR
M39003/06-2034	5.6	15	10	A		B	KEM, SPR
M39003/06-3034	5.6	15	10	A	C		KEM, SPR
M39003/06-4034	5.6	15	10	A	D		KEM, SPR
M39003/06-2035	33	15	10	B		B	KEM, SPR
M39003/06-3035	33	15	10	B	C		KEM, SPR
M39003/06-4035	33	15	10	B	D		KEM, SPR
M39003/06-2036	33	15	20	B		B	KEM, SPR
M39003/06-3036	33	15	20	B	C		KEM, SPR
M39003/06-4036	33	15	20	B	D		KEM, SPR
M39003/06-2037	39	15	10	B		B	KEM, SPR
M39003/06-3037	39	15	10	B	C		KEM, SPR
M39003/06-4037	39	15	10	B	D		KEM, SPR
M39003/06-2038	150	15	10	C		B	KEM, SPR
M39003/06-3038	150	15	10	C	C		KEM, SPR
M39003/06-4038	150	15	10	C	D		KEM, SPR
M39003/06-2039	150	15	20	C		B	KEM, SPR
M39003/06-3039	150	15	20	C	C		KEM, SPR
M39003/06-4039	150	15	20	C	D		KEM, SPR
M39003/06-2040	180	15	10	C		B	KEM, SPR
M39003/06-3040	180	15	10	C	C		KEM, SPR
M39003/06-4040	180	15	10	C	D		KEM, SPR
M39003/06-2041	220	15	10	D		B	KEM, SPR
M39003/06-3041	220	15	10	D	C		KEM, SPR
M39003/06-4041	220	15	10	D	D		KEM, SPR
M39003/06-2042	220	15	20	D		B	KEM, SPR
M39003/06-3042	220	15	20	D	C		KEM, SPR
M39003/06-4042	220	15	20	D	D		KEM, SPR
M39003/06-2043	270	15	10	D		B	KEM, SPR
M39003/06-3043	270	15	10	D	C		KEM, SPR
M39003/06-4043	270	15	10	D	D		KEM, SPR
M39003/06-2044	330	15	10	D		B	KEM, SPR
M39003/06-3044	330	15	10	D	C		KEM, SPR
M39003/06-4044	330	15	10	D	D		KEM, SPR
M39003/06-2045	330	15	20	D		B	KEM, SPR
M39003/06-3045	330	15	20	D	C		KEM, SPR
M39003/06-4045	330	15	20	D	D		KEM, SPR
M39003/06-2046	2.7	20	10	A		B	KEM, SPR

M39003/06-3046	2.7	20	10	A	C		KEM, SPR
M39003/06-4046	2.7	20	10	A	D		KEM, SPR
M39003/06-2047	3.3	20	10	A		B	KEM, SPR
M39003/06-3047	3.3	20	10	A	C		KEM, SPR
M39003/06-4047	3.3	20	10	A	D		KEM, SPR
M39003/06-2048	3.3	20	20	A		B	KEM, SPR
M39003/06-3048	3.3	20	20	A	C		KEM, SPR
M39003/06-4048	3.3	20	20	A	D		KEM, SPR
M39003/06-2049	3.9	20	10	A		B	KEM, SPR
M39003/06-3049	3.9	20	10	A	C		KEM, SPR
M39003/06-4049	3.9	20	10	A	D		KEM, SPR
M39003/06-2050	18	20	10	B		B	KEM, SPR
M39003/06-3050	18	20	10	B	C		KEM, SPR
M39003/06-4050	18	20	10	B	D		KEM, SPR
M39003/06-2051	22	20	10	B		B	KEM, SPR
M39003/06-3051	22	20	10	B	C		KEM, SPR
M39003/06-4051	22	20	10	B	D		KEM, SPR
M39003/06-2052	22	20	20	B		B	KEM, SPR
M39003/06-3052	22	20	20	B	C		KEM, SPR
M39003/06-4052	22	20	20	B	D		KEM, SPR
M39003/06-2053	27	20	10	B		B	KEM, SPR
M39003/06-3053	27	20	10	B	C		KEM, SPR
M39003/06-4053	27	20	10	B	D		KEM, SPR
M39003/06-2054	56	20	10	C		B	KEM, SPR
M39003/06-3054	56	20	10	C	C		KEM, SPR
M39003/06-4054	56	20	10	C	D		KEM, SPR
M39003/06-2055	68	20	10	C		B	KEM, SPR
M39003/06-3055	68	20	10	C	C		KEM, SPR
M39003/06-4055	68	20	10	C	D		KEM, SPR
M39003/06-2056	68	20	20	C		B	KEM, SPR
M39003/06-3056	68	20	20	C	C		KEM, SPR
M39003/06-4056	68	20	20	C	D		KEM, SPR
M39003/06-2057	82	20	10	C		B	KEM, SPR
M39003/06-3057	82	20	10	C	C		KEM, SPR
M39003/06-4057	82	20	10	C	D		KEM, SPR
M39003/06-2058	100	20	10	C		B	KEM, SPR
M39003/06-3058	100	20	10	C	C		KEM, SPR
M39003/06-4058	100	20	10	C	D		KEM, SPR
M39003/06-2059	100	20	20	C		B	KEM, SPR
M39003/06-3059	100	20	20	C	C		KEM, SPR
M39003/06-4059	100	20	20	C	D		KEM, SPR
M39003/06-2060	120	20	10	C		B	KEM, SPR
M39003/06-3060	120	20	10	C	C		KEM, SPR
M39003/06-4060	120	20	10	C	D		KEM, SPR
M39003/06-2061	150	20	10	D		B	KEM, SPR
M39003/06-3061	150	20	10	D	C		KEM, SPR
M39003/06-4061	150	20	10	D	D		KEM, SPR

M39003/06-2062	150	20	20	D		B	KEM, SPR
M39003/06-3062	150	20	20	D	C		KEM, SPR
M39003/06-4062	150	20	20	D	D		KEM, SPR
M39003/06-2063	180	20	10	D		B	KEM, SPR
M39003/06-3063	180	20	10	D	C		KEM, SPR
M39003/06-4063	180	20	10	D	D		KEM, SPR
M39003/06-2064	1.8	35	10	A		B	KEM, SPR
M39003/06-3064	1.8	35	10	A	C		KEM, SPR
M39003/06-4064	1.8	35	10	A	D		KEM, SPR
M39003/06-2065	8.2	35	10	B		B	KEM, SPR
M39003/06-3065	8.2	35	10	B	C		KEM, SPR
M39003/06-4065	8.2	35	10	B	D		KEM, SPR
M39003/06-2066	10	35	10	B		B	KEM, SPR
M39003/06-3066	10	35	10	B	C		KEM, SPR
M39003/06-4066	10	35	10	B	D		KEM, SPR
M39003/06-2067	10	35	20	B		B	KEM, SPR
M39003/06-3067	10	35	20	B	C		KEM, SPR
M39003/06-4067	10	35	20	B	D		KEM, SPR
M39003/06-2068	33	35	10	C		B	KEM, SPR
M39003/06-3068	33	35	10	C	C		KEM, SPR
M39003/06-4068	33	35	10	C	D		KEM, SPR
M39003/06-2069	33	35	20	C		B	KEM, SPR
M39003/06-3069	33	35	20	C	C		KEM, SPR
M39003/06-4069	33	35	20	C	D		KEM, SPR
M39003/06-2070	39	35	10	C		B	KEM, SPR
M39003/06-3070	39	35	10	C	C		KEM, SPR
M39003/06-4070	39	35	10	C	D		KEM, SPR
M39003/06-2071	47	35	10	C		B	KEM, SPR
M39003/06-3071	47	35	10	C	C		KEM, SPR
M39003/06-4071	47	35	10	C	D		KEM, SPR
M39003/06-2072	47	35	20	C		B	KEM, SPR
M39003/06-3072	47	35	20	C	C		KEM, SPR
M39003/06-4072	47	35	20	C	D		KEM, SPR
M39003/06-2073	56	35	10	D		B	KEM, SPR
M39003/06-3073	56	35	10	D	C		KEM, SPR
M39003/06-4073	56	35	10	D	D		KEM, SPR
M39003/06-2074	68	35	10	D		B	KEM, SPR
M39003/06-3074	68	35	10	D	C		KEM, SPR
M39003/06-4074	68	35	10	D	D		KEM, SPR
M39003/06-2075	68	35	20	D		B	KEM, SPR
M39003/06-3075	68	35	20	D	C		KEM, SPR
M39003/06-4075	68	35	20	D	D		KEM, SPR
M39003/06-2076	1.2	50	10	A		B	KEM, SPR
M39003/06-3076	1.2	50	10	A	C		KEM, SPR
M39003/06-4076	1.2	50	10	A	D		KEM, SPR
M39003/06-2077	1.5	50	10	A		B	KEM, SPR
M39003/06-3077	1.5	50	10	A	C		KEM, SPR

M39003/06-4077	1.5	50	10	A	D		KEM, SPR
M39003/06-2078	1.5	50	20	A		B	KEM, SPR
M39003/06-3078	1.5	50	20	A	C		KEM, SPR
M39003/06-4078	1.5	50	20	A	D		KEM, SPR
M39003/06-2079	5.6	50	10	B		B	KEM, SPR
M39003/06-3079	5.6	50	10	B	C		KEM, SPR
M39003/06-4079	5.6	50	10	B	D		KEM, SPR
M39003/06-2080	6.8	50	10	B		B	KEM, SPR
M39003/06-3080	6.8	50	10	B	C		KEM, SPR
M39003/06-4080	6.8	50	10	B	D		KEM, SPR
M39003/06-2081	6.8	50	20	B		B	KEM, SPR
M39003/06-3081	6.8	50	20	B	C		KEM, SPR
M39003/06-4081	6.8	50	20	B	D		KEM, SPR
M39003/06-2082	22	50	10	C		B	KEM, SPR
M39003/06-3082	22	50	10	C	C		KEM, SPR
M39003/06-4082	22	50	10	C	D		KEM, SPR
M39003/06-2083	22	50	20	C		B	KEM, SPR
M39003/06-3083	22	50	20	C	C		KEM, SPR
M39003/06-4083	22	50	20	C	D		KEM, SPR
M39003/06-2084	27	50	10	C		B	KEM, SPR
M39003/06-3084	27	50	10	C	C		KEM, SPR
M39003/06-4084	27	50	10	C	D		KEM, SPR
M39003/06-2085	33	50	10	D		B	KEM, SPR
M39003/06-3085	33	50	10	D	C		SPR
M39003/06-4085	33	50	10	D	D		SPR
M39003/06-2086	33	50	20	D		B	KEM, SPR
M39003/06-3086	33	50	20	D	C		SPR
M39003/06-4086	33	50	20	D	D		SPR
M39003/06-2087	39	50	10	D		B	KEM, SPR
M39003/06-3087	39	50	10	D	C		SPR
M39003/06-4087	39	50	10	D	D		SPR

Style CSR33

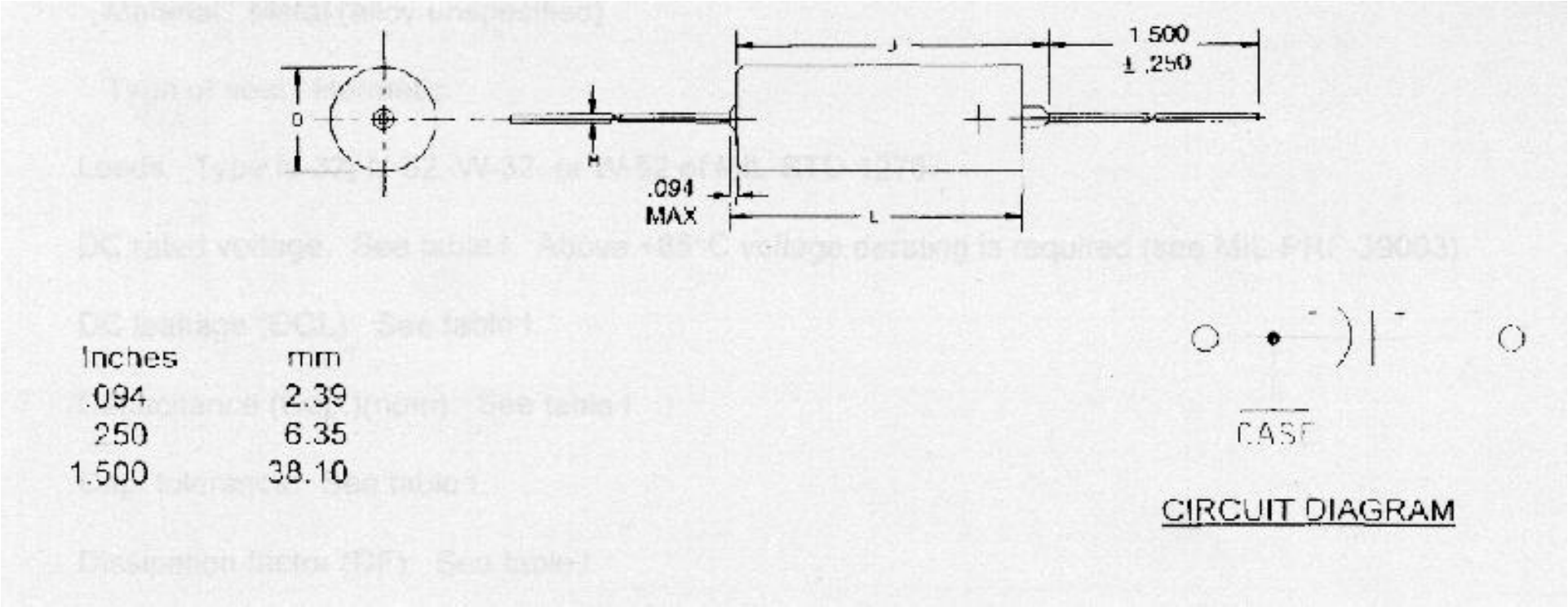

Case Size	L+/-0.031 (0.79)	D +0.016 (0.41) -0.015 (0.38)	M+/-0.002 (0.05)	J Max
A	0.286 (7.26)	0.135 (3.43)	0.020 (0.51)	0.422 (10.72)
B	0.474 (12.04)	0.185 (4.70)	0.020 (0.51)	0.610 (15.49)
C	0.686 (17.42)	0.289 (7.34)	0.025 (0.64)	0.822 (20.88)
D	0.786 (19.96)	0.351 (8.92)	0.025 (0.64)	0.922 (23.42)

Notes:

1) Dimensions are in inches.

2) Metric equivalents are in parentheses and are given for general information only.

3) The case insulation shall extend 0.015 (0.38 mm) minimum beyond each end. However, when a shrink-fitted insulation is used, it shall lap over the ends of the capacitor body.

4) Lead length may be a minimum of 1 inch long for use in tape and reel automatic insertion equipment, when specified.

	Cap.	Rated	Cap.	Case	Config.	Level 1	Level 2	
Part Number	Value (uF)	Voltage (V)	Tol (+/- %)	Size	(*)	(FRL)	(FRL)	Manufacturer
M39003/10-3001*	5.6	6	10	A	S or U	C		KEM
M39003/10-3002*	6.8	6	10	A	S or U	C		KEM
M39003/10-3003*	47	6	10	B	S or U	C		KEM
M39003/10-3004*	56	6	10	B	S or U	C		KEM
M39003/10-3005*	150	6	10	C	S or U	C		KEM
M39003/10-3006*	180	6	10	C	S or U	C		KEM
M39003/10-3007*	270	6	10	D	S or U	C		KEM
M39003/10-3008*	330	6	10	D	S or U	C		KEM
M39003/10-3009*	3.9	10	10	A	S or U	C		KEM
M39003/10-3010*	4.7	10	10	A	S or U	C		KEM
M39003/10-3011*	27	10	10	B	S or U	C		KEM
M39003/10-3012*	33	10	10	B	S or U	C		KEM
M39003/10-3013*	39	10	10	B	S or U	C		KEM
M39003/10-3014*	82	10	10	C	S or U	C		KEM
M39003/10-3015*	100	10	10	C	S or U	C		KEM
M39003/10-3016*	120	10	10	C	S or U	C		KEM
M39003/10-3017*	180	10	10	D	S or U	C		KEM
	Cap.	Rated	Cap.	Case	Config.	Level 1	Level 2	
Part Number	Value (uF)	Voltage (V)	Tol (+/- %)	Size	(*)	(FRL)	(FRL)	Manufacturer
M39003/10-3018*	220	10	10	D	S or U	C		KEM
M39003/10-3019*	2.7	15	10	A	S or U	C		KEM
M39003/10-3020*	3.3	15	10	A	S or U	C		KEM
M39003/10-3021*	18	15	10	B	S or U	C		KEM
M39003/10-3022*	22	15	10	B	S or U	C		KEM
M39003/10-3023*	56	15	10	C	S or U	C		KEM
M39003/10-3024*	68	15	10	C	S or U	C		KEM
M39003/10-3025*	120	15	10	D	S or U	C		KEM
M39003/10-3026*	150	15	10	D	S or U	C		KEM
	Cap.	Rated	Cap.	Case	Config.	Level 1	Level 2	
Part Number	Value (uF)	Voltage (V)	Tol (+/- %)	Size	(*)	(FRL)	(FRL)	Manufacturer
M39003/10-3027*	1.2	20	10	A	S or U	C		KEM
M39003/10-3028*	1.5	20	10	A	S or U	C		KEM
M39003/10-3029*	1.8	20	10	A	S or U	C		KEM
M39003/10-3030*	2.2	20	10	A	S or U	C		KEM
M39003/10-3031*	8.2	20	10	B	S or U	C		KEM
M39003/10-3032*	10	20	10	B	S or U	C		KEM
M39003/10-3033*	12	20	10	B	S or U	C		KEM
M39003/10-3034*	15	20	10	B	S or U	C		KEM
M39003/10-3035*	27	20	10	C	S or U	C		KEM
	Cap.	Rated	Cap.	Case	Config.	Level 1	Level 2	
Part Number	Value (uF)	Voltage (V)	Tol (+/- %)	Size	(*)	(FRL)	(FRL)	Manufacturer
M39003/10-3036*	33	20	10	C	S or U	C		KEM
M39003/10-3037*	39	20	10	C	S or U	C		KEM

M39003/10-3038*	47	20	10	C	S or U	C		KEM
M39003/10-2039*	56	20	10	D	S or U		B	KEM
M39003/10-2040*	68	20	10	D	S or U		B	KEM
M39003/10-2041*	82	20	10	D	S or U		B	KEM
M39003/10-2042*	100	20	10	D	S or U		B	KEM
M39003/10-2043*	5.6	35	10	B	S or U		B	KEM
M39003/10-2044*	6.8	35	10	B	S or U		B	KEM
	Cap.	Rated	Cap.	Case	Config.	Level 1	Level 2	
Part Number	Value (uF)	Voltage (V)	Tol (+/- %)	Size	(*)	(FRL)	(FRL)	Manufacturer
M39003/10-2045*	22	35	10	C	S or U		B	KEM
M39003/10-2046*	27	35	10	D	S or U		B	KEM
M39003/10-2047*	33	35	10	D	S or U		B	KEM
M39003/10-2048*	39	35	10	D	S or U		B	KEM
M39003/10-2049*	47	35	10	D	S or U		B	KEM
M39003/10-3067*	0.12	50	10	A	S or U	C		KEM
M39003/10-3068*	0.15	50	10	A	S or U	C		KEM
M39003/10-3069*	0.18	50	10	A	S or U	C		KEM
M39003/10-3070*	0.22	50	10	A	S or U	C		KEM
	Cap.	Rated	Cap.	Case	Config.	Level 1	Level 2	
Part Number	Value (uF)	Voltage (V)	Tol (+/- %)	Size	(*)	(FRL)	(FRL)	Manufacturer
M39003/10-3071*	0.27	50	10	A	S or U	C		KEM
M39003/10-3072*	0.33	50	10	A	S or U	C		KEM
M39003/10-3073*	0.39	50	10	A	S or U	C		KEM
M39003/10-3074*	0.47	50	10	A	S or U	C		KEM
M39003/10-3075*	0.56	50	10	A	S or U	C		KEM
M39003/10-3076*	0.68	50	10	A	S or U	C		KEM
M39003/10-3077*	0.82	50	10	A	S or U	C		KEM
M39003/10-3078*	1.0	50	10	A	S or U	C		KEM
M39003/10-3079*	1.2	50	10	B	S or U	C		KEM
	Cap.	Rated	Cap.	Case	Config.	Level 1	Level 2	
Part Number	Value (uF)	Voltage (V)	Tol (+/- %)	Size	(*)	(FRL)	(FRL)	Manufacturer
M39003/10-3080*	1.5	50	10	B	S or U	C		KEM
M39003/10-3081*	1.8	50	10	B	S or U	C		KEM
M39003/10-3082*	2.2	50	10	B	S or U	C		KEM
M39003/10-3083*	2.7	50	10	B	S or U	C		KEM
M39003/10-3084*	3.3	50	10	B	S or U	C		KEM
M39003/10-3085*	3.9	50	10	B	S or U	C		KEM
M39003/10-2086*	4.7	50	10	B	S or U		B	KEM
M39003/10-3087*	5.6	50	10	C	S or U	C		KEM
M39003/10-3088*	6.8	50	10	C	S or U	C		KEM
	Cap.	Rated	Cap.	Case	Config.	Level 1	Level 2	
Part Number	Value (uF)	Voltage (V)	Tol (+/- %)	Size	(*)	(FRL)	(FRL)	Manufacturer
M39003/10-3089*	8.2	50	10	C	S or U	C		KEM
M39003/10-3090*	10	50	10	C	S or U	C		KEM
M39003/10-2091*	12	50	10	C	S or U		B	KEM
M39003/10-2092*	15	50	10	C	S or U		B	KEM
M39003/10-2093*	18	50	10	C	S or U		B	KEM

M39003/10-2094*	22	50	10	D	S or U		B	KEM
M39003/10-3097*	0.15	75	10	A	S or U	C		KEM
M39003/10-3098*	0.18	75	10	A	S or U	C		KEM
M39003/10-3099*	0.22	75	10	A	S or U	C		KEM
	Cap.	Rated	Cap.	Case	Config.	Level 1	Level 2	
Part Number	Value (uF)	Voltage (V)	Tol (+/- %)	Size	(*)	(FRL)	(FRL)	Manufacturer
M39003/10-3100*	0.27	75	10	A	S or U	C		KEM
M39003/10-3101*	0.33	75	10	A	S or U	C		KEM
M39003/10-3102*	0.39	75	10	A	S or U	C		KEM
M39003/10-3103*	0.47	75	10	A	S or U	C		KEM
M39003/10-3104*	0.56	75	10	A	S or U	C		KEM
M39003/10-3105*	0.68	75	10	B	S or U	C		KEM
M39003/10-3106*	0.82	75	10	B	S or U	C		KEM
M39003/10-3107*	1.0	75	10	B	S or U	C		KEM
M39003/10-3108*	1.2	75	10	B	S or U	C		KEM
	Cap.	Rated	Cap.	Case	Config.	Level 1	Level 2	
Part Number	Value (uF)	Voltage (V)	Tol (+/- %)	Size	(*)	(FRL)	(FRL)	Manufacturer
M39003/10-3109*	1.5	75	10	B	S or U	C		KEM
M39003/10-3110*	1.8	75	10	B	S or U	C		KEM
M39003/10-3111*	2.2	75	10	B	S or U	C		KEM
M39003/10-2112*	2.7	75	10	B	S or U		B	KEM
M39003/10-2113*	3.3	75	10	B	S or U		B	KEM
M39003/10-2114*	3.9	75	10	B	S or U		B	KEM
M39003/10-2115*	4.7	75	10	C	S or U		B	KEM
M39003/10-2116*	5.6	75	10	C	S or U		B	KEM
M39003/10-2117*	6.8	75	10	C	S or U		B	KEM
	Cap.	Rated	Cap.	Case	Config.	Level 1	Level 2	
Part Number	Value (uF)	Voltage (V)	Tol (+/- %)	Size	(*)	(FRL)	(FRL)	Manufacturer
M39003/10-2118*	8.2	75	10	C	S or U		B	KEM
M39003/10-2119*	10	75	10	C	S or U		B	KEM
M39003/10-2120*	12	75	10	D	S or U		B	KEM
M39003/10-2121*	15	75	10	D	S or U		B	KEM
	Cap.	Rated	Cap.	Case	Config.	Level 1	Level 2	
Part Number	Value (uF)	Voltage (V)	Tol (+/- %)	Size	(*)	(FRL)	(FRL)	Manufacturer

Styles CSS13 and CSS33

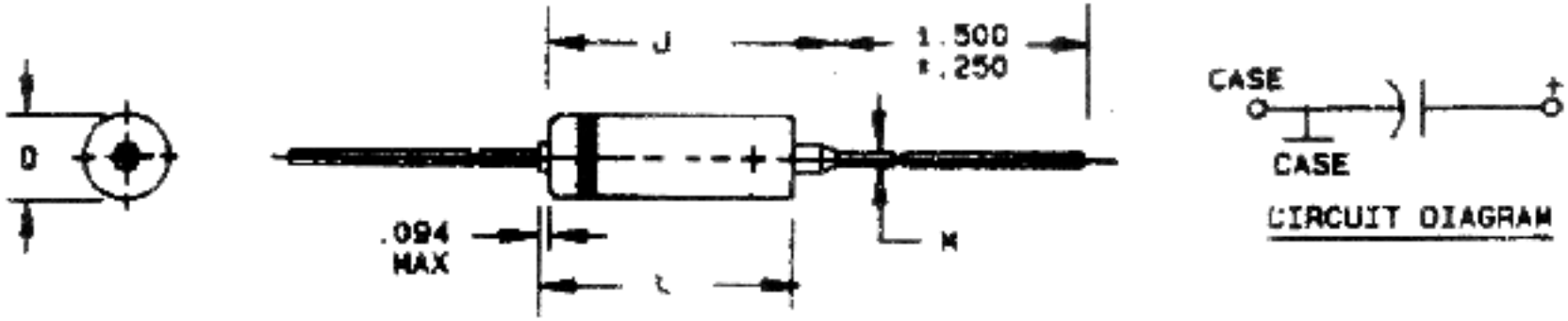

Dimensions

	Insulated	Insulated	Uninsulated	Uninsulated		
Case Size	L +/- 0.031	D +0.016 -0.015	L +/- 0.031	D +0.016 -0.015	M +/- 0.002	J max
A	0.286	0.135	0.250	0.125	0.020	0.422
B	0.474	0.185	0.438	0.175	0.020	0.610
C	0.686	0.289	0.650	0.279	0.025	0.822
D	0.786	0.351	0.750	0.341	0.025	0.922

Notes:

1) Dimensions are in inches.

2) Metric equivalents are given for general information only.

3) The case insulation shall extend 0.015 (0.38 mm) minimum beyond each end. However, when a shrink-fitted insulation is used, it shall lap over the ends of the capacitor body.

4) Lead length may be a minimum of 1-inch long for use in tape and reel automatic insertion equipment, when specified.

5) Black band to indicate negative end of case.

CSS33 Solid Tantalum Capacitors

	Cap.	Rated	Cap.	Case	Config.	Level 1	Level 2	
Part Number	Value (uF)	Voltage (V)	Tol (+/- %)	Size	(*)	(FRL)	(FRL)	Manufacturer
M39003/10-3500*	10	6	10	A	S or U	C		KEM
M39003/10-3501*	12	6	10	A	S or U	C		KEM
M39003/10-3502*	100	6	10	B	S or U	C		KEM

M39003/10-2503*	330	6	10	C	S or U		B	KEM
M39003/10-2505*	390	6	10	C	S or U		B	KEM
M39003/10-3502*	470	6	10	C	S or U		B	KEM
M39003/10-3506*	680	6	10	D	S or U	C		KEM
M39003/10-3507*	820	6	10	D	S or U	C		KEM
M39003/10-3508*	1000	6	10	D	S or U	C		KEM
M39003/10-3509*	6.8	10	10	A	S or U	C		KEM
M39003/10-3510*	8.2	10	10	A	S or U	C		KEM
M39003/10-3511*	47	10	10	B	S or U	C		KEM
M39003/10-3512*	56	10	10	B	S or U	C		KEM
M39003/10-3513*	68	10	10	B	S or U	C		KEM
M39003/10-3514*	82	10	10	B	S or U	C		KEM
M39003/10-2515*	220	10	10	C	S or U		B	KEM
M39003/10-2516*	270	10	10	C	S or U		B	KEM
M39003/10-3517*	390	10	10	D	S or U	C		KEM
	Cap.	Rated	Cap.	Case	Config.	Level 1	Level 2	
Part Number	Value (uF)	Voltage (V)	Tol (+/- %)	Size	(*)	(FRL)	(FRL)	Manufacturer
M39003/10-3518*	470	10	10	D	S or U	C		KEM
M39003/10-3519*	560	10	10	D	S or U	C		KEM
M39003/10-3520*	4.7	15	10	A	S or U	C		KEM
M39003/10-3521*	5.6	15	10	A	S or U	C		KEM
M39003/10-3522*	33	15	10	B	S or U	C		KEM
M39003/10-3523*	39	15	10	B	S or U	C		KEM
M39003/10-2524*	150	15	10	C	S or U		B	KEM
M39003/10-2525*	180	15	10	C	S or U		B	KEM
M39003/10-2526*	220	15	10	D	S or U		B	KEM
M39003/10-2527*	270	15	10	D	S or U		B	KEM
M39003/10-2528*	330	15	10	D	S or U		B	KEM
M39003/10-3529*	2.7	20	10	A	S or U	C		KEM
M39003/10-3530*	3.3	20	10	A	S or U	C		KEM
M39003/10-3531*	3.9	20	10	A	S or U	C		KEM
M39003/10-3532*	18	20	10	B	S or U	C		KEM
M39003/10-2533*	22	20	10	B	S or U		B	KEM
M39003/10-2534*	27	20	10	B	S or U		B	KEM
M39003/10-3535*	56	20	10	C	S or U	C		KEM
	Cap.	Rated	Cap.	Case	Config.	Level 1	Level 2	
Part Number	Value (uF)	Voltage (V)	Tol (+/- %)	Size	(*)	(FRL)	(FRL)	Manufacturer
M39003/10-3536*	68	20	10	C	S or U	C		KEM
M39003/10-2537*	82	20	10	C	S or U		B	KEM
M39003/10-2538*	100	20	10	C	S or U		B	KEM
M39003/10-2539*	120	20	10	C	S or U		B	KEM
M39003/10-2540*	150	20	10	D	S or U		B	KEM
M39003/10-2541*	180	20	10	D	S or U		B	KEM
M39003/10-2542*	1.8	35	10	A	S or U		B	KEM
M39003/10-2543*	8.2	35	10	B	S or U		B	KEM
M39003/10-2544*	10	35	10	B	S or U		B	KEM
	Cap.	Rated	Cap.	Case	Config.	Level 1	Level 2	

Part Number	Value (uF)	Voltage (V)	Tol (+/- %)	Size	(*)	(FRL)	(FRL)	Manufacturer
M39003/10-2545*	33	35	10	C	S or U		B	KEM
M39003/10-2546*	39	35	10	C	S or U		B	KEM
M39003/10-2547*	47	35	10	C	S or U		B	KEM
M39003/10-2548*	56	35	10	D	S or U		B	KEM
M39003/10-2549*	68	35	10	D	S or U		B	KEM
M39003/10-2550*	1.2	50	10	A	S or U		B	KEM
M39003/10-2551*	1.5	50	10	A	S or U		B	KEM
M39003/10-2552*	5.6	50	10	B	S or U		B	KEM
M39003/10-2553*	6.8	50	10	B	S or U		B	KEM
	Cap.	Rated	Cap.	Case	Config.	Level 1	Level 2	
Part Number	Value (uF)	Voltage (V)	Tol (+/- %)	Size	(*)	(FRL)	(FRL)	Manufacturer
M39003/10-2554*	22	50	10	C	S or U		B	KEM
M39003/10-2555*	27	50	10	C	S or U		B	KEM
M39003/10-2556*	33	50	10	D	S or U		B	KEM
M39003/10-2557*	39	50	10	D	S or U		B	KEM
	Cap.	Rated	Cap.	Case	Config.	Level 1	Level 2	
Part Number	Value (uF)	Voltage (V)	Tol (+/- %)	Size	(*)	(FRL)	(FRL)	Manufacturer

Go to -

NEPP

|

NPSL

|

Capacitors

MIL-PRF-39006, CAPACITORS

Fixed, Tantalum, Electrolytic (Nonsolid Electrolyte), Hermetically Sealed,

Established Reliability

CLR Styles

Part Number/Ordering Explanation

Important! Application Notes

Revision History for MIL-PRF-39006 Listing in the NPSL

Last Revision: 04/29/02

Click on the link below to see the associated parts selection listing:

Style	Detail Specification	Description (Click Below for Dimensions)
CLR79	MIL-PRF-39006/22	Polarized, Sintered Slug 30 uF to 1200 uF (6 V) 25 uF to 850 uF (8 V) 20 uF to 750 uF (10 V) 15 uF to 540 uF (15 V) 8 uF to 300 uF (30 V) 5 uF to 160 uF (50 V) 3.5 uF to 110 uF (75
CLR81	MIL-PRF-39006/25	Polarized, Sintered Slug, Extended Range 220 uF to 2200 uF (6 V) 180 uF to 1800 uF (8 V) 150 uF to 1500 uF (10 V) 100 uF to 1000 uF (15 V) 68 uF to 680 uF (25 V) 56 uF to 560 uF (3
CLR90	MIL-PRF-39006/30	Polarized, Sintered Slug 30 uF to 1200 uF (6 V) 25 uF to 850 uF (8 V) 20 uF to 750 uF (10 V) 15 uF to 540 uF (15 V) 8 uF to 300 uF (30 V) 5 uF to 160 uF (50 V) 3.5 uF to 110 uF (75
CLR91	MIL-PRF-39006/31	Polarized, Sintered Slug, Extended Range 220 uF to 2200 uF (6 V) 180 uF to 1800 uF (8 V) 150 uF to 1500 uF (10 V) 100 uF to 1000 uF (15 V) 68 uF to 680 uF (25 V) 56 uF to 560 uF (3

Note: The last known source for wet tantalum foil capacitors has stopped production. Therefore, the following capacitor types are NOT included in this parts selection list.

Style	Detail Specification	Description
CLR25	MIL-C-39006/1	Polarized, Etched Foil
CLR27	MIL-C-39006/2	Non-Polarized, Etched Foil
CLR35	MIL-C-39006/3	Polarized, Plain Foil
CLR37	MIL-C-39006/4	Non-Polarized, Plain Foil

APPLICATION NOTES FOR MIL-PRF-39006

1) CLR79 and CLR81 styles can be a source of transient potentials (intermittent shorts) during vibrational stimuli. Consult the project parts engineer for recommendations.

2) CLR79, CLR81, CLR90 and CLR91 tantalum capacitors are polar devices that are sensitive to reverse bias voltage. Reverse bias application of these parts should be avoided. Per MIL-PRF-39006 these capacitors are capable of handling up to 3 volts of reverse polarity at 85deg.C regardless of capacitor voltage rating with some degradation in their leakage current characteristics. Exceeding 3 volts reverse bias may cause rapid deterioration of the capacitor which can lead to catastrophic failure (short circuit). Refer to NEPAG Lesson Learned Bulletin

NEPAG-LLB-2001-002

for further details.

3) M39006 style capacitors rated at 125 V are NOT recommended for use and are therefore NOT listed within the NPSL. In order to produce the higher voltage ratings the manufacturers use alternate process steps compared to the lower voltage styles. These alternate process steps have NOT been found to consistently produce reliable parts as evidenced by frequent stop shipment orders by the Military qualifying activity.

Revision History for MIL-PRF-39006 Listing in the NPSL

04/29/02	Removed the 125 V rated CLR79, CLR81, CLR90 and CLR91 capacitors from the NPSL and included application note explaining reasons why. Added application note describing voltage polarity sensitivity of th
05/21/98	Added case sizes to the parts list tables Added outline drawings to this section.
03/03/98	Editorial addition of CLR90 and CLR91 to the part number explanation page
12/01/97	Made changes indicating the specification conversion to a performance specification (MIL-PRF-39006 instead of MIL-C-39006)
05/01/97	Initial Release of MIL-C-39006 Section in the NPSL

Part Number Ordering Information, example and explanation:

M39006/22-0601H where,

M39006	/22	-0601	H
Military Specification Number	Detail Specification Number	Four-digit dash number which uniquely identifies the capacitance, tolerance, rated dc voltage, dc leakage, and failure rate level	H denotes a const

Part number ordering options are developed using the following criteria:

Style	Detail Specification	Description		Failure Rate Level
CLR79	MIL-PRF-39006/22	Polarized, Sintered Slug		P = 0.1%/1000 hours (See General Requirements, Level 2)
CLR81	MIL-PRF-39006/25	Polarized, Sintered Slug, Extended Range		R = 0.01%/1000 hours (See General Requirements, Level 1)
CLR90	MIL-PRF-39006/30	Polarized, Sintered Slug		
CLR91	MIL-PRF-39006/31	Polarized, Sintered Slug, Extended Range		

	Cap.	Rated	Cap.	Case	Level 1	Level 2	
Part Number	Value (uF)	Voltage (V)	Tol (+/- %)	Size	(FRL)	(FRL)	Manufacturer
M39006/22-0441H	30	6	20	T1	R		MAL, TAN
M39006/22-0221H	30	6	20	T1		P	MAL, TAN
M39006/22-0442H	30	6	10	T1	R		MAL, TAN
M39006/22-0222H	30	6	10	T1		P	MAL, TAN
M39006/22-0443H	30	6	5	T1	R		MAL, TAN
M39006/22-0223H	30	6	5	T1		P	MAL, TAN
M39006/22-0444H	68	6	20	T1	R		MAL, TAN
M39006/22-0224H	68	6	20	T1		P	MAL, TAN
M39006/22-0445H	68	6	10	T1	R		MAL, TAN
M39006/22-0225H	68	6	10	T1		P	MAL, TAN
M39006/22-0446H	68	6	5	T1	R		MAL, TAN
M39006/22-0226H	68	6	5	T1		P	MAL, TAN
M39006/22-0447H	140	6	20	T2	R		MAL, TAN
M39006/22-0227H	140	6	20	T2		P	MAL, TAN
M39006/22-0448H	140	6	10	T2	R		MAL, TAN
M39006/22-0228H	140	6	10	T2		P	MAL, TAN
M39006/22-0449H	140	6	5	T2	R		MAL, TAN
M39006/22-0229H	140	6	5	T2		P	MAL, TAN
	Cap.	Rated	Cap.	Case	Level 1	Level 2	
Part Number	Value (uF)	Voltage (V)	Tol (+/- %)	Size	(FRL)	(FRL)	Manufacturer
M39006/22-0450H	270	6	20	T2	R		MAL, TAN
M39006/22-0230H	270	6	20	T2		P	MAL, TAN
M39006/22-0451H	270	6	10	T2	R		MAL, TAN
M39006/22-0231H	270	6	10	T2		P	MAL, TAN
M39006/22-0452H	270	6	5	T2	R		MAL, TAN
M39006/22-0232H	270	6	5	T2		P	MAL, TAN
M39006/22-0453H	330	6	20	T3	R		MAL, TAN
M39006/22-0233H	330	6	20	T3		P	MAL, TAN
M39006/22-0454H	330	6	10	T3	R		MAL, TAN
M39006/22-0234H	330	6	10	T3		P	MAL, TAN
M39006/22-0455H	330	6	5	T3	R		MAL, TAN
M39006/22-0235H	330	6	5	T3		P	MAL, TAN
M39006/22-0456H	560	6	20	T3	R		MAL, TAN
M39006/22-0236H	560	6	20	T3		P	MAL, TAN
M39006/22-0457H	560	6	10	T3	R		MAL, TAN
M39006/22-0237H	560	6	10	T3		P	MAL, TAN
M39006/22-0458H	560	6	5	T3	R		MAL, TAN
M39006/22-0238H	560	6	5	T3		P	MAL, TAN
	Cap.	Rated	Cap.	Case	Level 1	Level 2	
Part Number	Value (uF)	Voltage (V)	Tol (+/- %)	Size	(FRL)	(FRL)	Manufacturer

M39006/22-0459H	1200	6	20	T4	R		MAL, TAN
M39006/22-0239H	1200	6	20	T4		P	MAL, TAN
M39006/22-0460H	1200	6	10	T4	R		MAL, TAN
M39006/22-0240H	1200	6	10	T4		P	MAL, TAN
M39006/22-0461H	25	8	20	T1	R		MAL, TAN
M39006/22-0241H	25	8	20	T1		P	MAL, TAN
M39006/22-0462H	25	8	10	T1	R		MAL, TAN
M39006/22-0242H	25	8	10	T1		P	MAL, TAN
M39006/22-0463H	25	8	5	T1	R		MAL, TAN
M39006/22-0243H	25	8	5	T1		P	MAL, TAN
M39006/22-0464H	56	8	20	T1	R		MAL, TAN
M39006/22-0244H	56	8	20	T1		P	MAL, TAN
M39006/22-0465H	56	8	10	T1	R		MAL, TAN
M39006/22-0245H	56	8	10	T1		P	MAL, TAN
M39006/22-0466H	56	8	5	T1	R		MAL, TAN
M39006/22-0246H	56	8	5	T1		P	MAL, TAN
M39006/22-0467H	120	8	20	T2	R		MAL, TAN
M39006/22-0247H	120	8	20	T2		P	MAL, TAN
	Cap.	Rated	Cap.	Case	Level 1	Level 2	
Part Number	Value (uF)	Voltage (V)	Tol (+/- %)	Size	(FRL)	(FRL)	Manufacturer
M39006/22-0468H	120	8	10	T2	R		MAL, TAN
M39006/22-0248H	120	8	10	T2		P	MAL, TAN
M39006/22-0469H	120	8	5	T2	R		MAL, TAN
M39006/22-0249H	120	8	5	T2		P	MAL, TAN
M39006/22-0470H	220	8	20	T2	R		MAL, TAN
M39006/22-0250H	220	8	20	T2		P	MAL, TAN
M39006/22-0471H	220	8	10	T2	R		MAL, TAN
M39006/22-0251H	220	8	10	T2		P	MAL, TAN
M39006/22-0472H	220	8	5	T2	R		MAL, TAN
M39006/22-0252H	220	8	5	T2		P	MAL, TAN
M39006/22-0473H	290	8	20	T3	R		MAL, TAN
M39006/22-0253H	290	8	20	T3		P	MAL, TAN
M39006/22-0474H	290	8	10	T3	R		MAL, TAN
M39006/22-0254H	290	8	10	T3		P	MAL, TAN
M39006/22-0475H	290	8	5	T3	R		MAL, TAN
M39006/22-0255H	290	8	5	T3		P	MAL, TAN
M39006/22-0476H	430	8	20	T3	R		MAL, TAN
M39006/22-0256H	430	8	20	T3		P	MAL, TAN
	Cap.	Rated	Cap.	Case	Level 1	Level 2	
Part Number	Value (uF)	Voltage (V)	Tol (+/- %)	Size	(FRL)	(FRL)	Manufacturer
M39006/22-0477H	430	8	10	T3	R		MAL, TAN
M39006/22-0257H	430	8	10	T3		P	MAL, TAN
M39006/22-0478H	430	8	5	T3	R		MAL, TAN
M39006/22-0258H	430	8	5	T3		P	MAL, TAN
M39006/22-0479H	850	8	20	T4	R		MAL, TAN
M39006/22-0259H	850	8	20	T4		P	MAL, TAN
M39006/22-0480H	850	8	10	T4	R		MAL, TAN

M39006/22-0260H	850	8	10	T4		P	MAL, TAN
M39006/22-0481H	20	10	20	T1	R		MAL, TAN
M39006/22-0261H	20	10	20	T1		P	MAL, TAN
M39006/22-0482H	20	10	10	T1	R		MAL, TAN
M39006/22-0262H	20	10	10	T1		P	MAL, TAN
M39006/22-0483H	20	10	5	T1	R		MAL, TAN
M39006/22-0263H	20	10	5	T1		P	MAL, TAN
M39006/22-0484H	47	10	20	T1	R		MAL, TAN
M39006/22-0264H	47	10	20	T1		P	MAL, TAN
	Cap.	Rated	Cap.	Case	Level 1	Level 2	
Part Number	Value (uF)	Voltage (V)	Tol (+/- %)	Size	(FRL)	(FRL)	Manufacturer
M39006/22-0485H	47	10	10	T1	R		MAL, TAN
M39006/22-0265H	47	10	10	T1		P	MAL, TAN
M39006/22-0486H	47	10	5	T1	R		MAL, TAN
M39006/22-0266H	47	10	5	T1		P	MAL, TAN
M39006/22-0487H	100	10	20	T2	R		MAL, TAN
M39006/22-0267H	100	10	20	T2		P	MAL, TAN
M39006/22-0488H	100	10	10	T2	R		MAL, TAN
M39006/22-0268H	100	10	10	T2		P	MAL, TAN
M39006/22-0489H	100	10	5	T2	R		MAL, TAN
M39006/22-0269H	100	10	5	T2		P	MAL, TAN
M39006/22-0490H	180	10	20	T2	R		MAL, TAN
M39006/22-0270H	180	10	20	T2		P	MAL, TAN
M39006/22-0491H	180	10	10	T2	R		MAL, TAN
M39006/22-0271H	180	10	10	T2		P	MAL, TAN
M39006/22-0492H	180	10	5	T2	R		MAL, TAN
M39006/22-0272H	180	10	5	T2		P	MAL, TAN
M39006/22-0493H	250	10	20	T3	R		MAL, TAN
M39006/22-0273H	250	10	20	T3		P	MAL, TAN
	Cap.	Rated	Cap.	Case	Level 1	Level 2	
Part Number	Value (uF)	Voltage (V)	Tol (+/- %)	Size	(FRL)	(FRL)	Manufacturer
M39006/22-0494H	250	10	10	T3	R		MAL, TAN
M39006/22-0274H	250	10	10	T3		P	MAL, TAN
M39006/22-0495H	250	10	5	T3	R		MAL, TAN
M39006/22-0275H	250	10	5	T3		P	MAL, TAN
M39006/22-0496H	390	10	20	T3	R		MAL, TAN
M39006/22-0276H	390	10	20	T3		P	MAL, TAN
M39006/22-0497H	390	10	10	T3	R		MAL, TAN
M39006/22-0277H	390	10	10	T3		P	MAL, TAN
M39006/22-0498H	390	10	5	T3	R		MAL, TAN
M39006/22-0278H	390	10	5	T3		P	MAL, TAN
M39006/22-0499H	750	10	20	T4	R		MAL, TAN
M39006/22-0279H	750	10	20	T4		P	MAL, TAN
M39006/22-0500H	750	10	10	T4	R		MAL, TAN
M39006/22-0280H	750	10	10	T4		P	MAL, TAN
M39006/22-0501H	15	15	20	T1	R		MAL, TAN
M39006/22-0281H	15	15	20	T1		P	MAL, TAN

M39006/22-0502H	15	15	10	T1	R		MAL, TAN
M39006/22-0282H	15	15	10	T1		P	MAL, TAN
	Cap.	Rated	Cap.	Case	Level 1	Level 2	
Part Number	Value (uF)	Voltage (V)	Tol (+/- %)	Size	(FRL)	(FRL)	Manufacturer
M39006/22-0503H	15	15	5	T1	R		MAL, TAN
M39006/22-0283H	15	15	5	T1		P	MAL, TAN
M39006/22-0504H	33	15	20	T1	R		MAL, TAN
M39006/22-0284H	33	15	20	T1		P	MAL, TAN
M39006/22-0505H	33	15	10	T1	R		MAL, TAN
M39006/22-0285H	33	15	10	T1		P	MAL, TAN
M39006/22-0506H	33	15	5	T1	R		MAL, TAN
M39006/22-0286H	33	15	5	T1		P	MAL, TAN
M39006/22-0507H	70	15	20	T2	R		MAL, TAN
M39006/22-0287H	70	15	20	T2		P	MAL, TAN
M39006/22-0508H	70	15	10	T2	R		MAL, TAN
M39006/22-0288H	70	15	10	T2		P	MAL, TAN
M39006/22-0509H	70	15	5	T2	R		MAL, TAN
M39006/22-0289H	70	15	5	T2		P	MAL, TAN
M39006/22-0510H	120	15	20	T2	R		MAL, TAN
M39006/22-0290H	120	15	20	T2		P	MAL, TAN
M39006/22-0511H	120	15	10	T2	R		MAL, TAN
M39006/22-0291H	120	15	10	T2		P	MAL, TAN
	Cap.	Rated	Cap.	Case	Level 1	Level 2	
Part Number	Value (uF)	Voltage (V)	Tol (+/- %)	Size	(FRL)	(FRL)	Manufacturer
M39006/22-0512H	120	15	5	T2	R		MAL, TAN
M39006/22-0292H	120	15	5	T2		P	MAL, TAN
M39006/22-0513H	170	15	20	T3	R		MAL, TAN
M39006/22-0293H	170	15	20	T3		P	MAL, TAN
M39006/22-0514H	170	15	10	T3	R		MAL, TAN
M39006/22-0294H	170	15	10	T3		P	MAL, TAN
M39006/22-0515H	170	15	5	T3	R		MAL, TAN
M39006/22-0295H	170	15	5	T3		P	MAL, TAN
M39006/22-0516H	270	15	20	T3	R		MAL, TAN
M39006/22-0296H	270	15	20	T3		P	MAL, TAN
M39006/22-0517H	270	15	10	T3	R		MAL, TAN
M39006/22-0297H	270	15	10	T3		P	MAL, TAN
M39006/22-0518H	270	15	5	T3	R		MAL, TAN
M39006/22-0298H	270	15	5	T3		P	MAL, TAN
M39006/22-0519H	540	15	20	T4	R		MAL, TAN
M39006/22-0299H	540	15	20	T4		P	MAL, TAN
M39006/22-0520H	540	15	10	T4	R		MAL, TAN
M39006/22-0300H	540	15	10	T4		P	MAL, TAN
	Cap.	Rated	Cap.	Case	Level 1	Level 2	
Part Number	Value (uF)	Voltage (V)	Tol (+/- %)	Size	(FRL)	(FRL)	Manufacturer
M39006/22-0541H	8	30	20	T1	R		MAL, TAN
M39006/22-0321H	8	30	20	T1		P	MAL, TAN
M39006/22-0542H	8	30	10	T1	R		MAL, TAN

M39006/22-0322H	8	30	10	T1		P	MAL, TAN
M39006/22-0543H	8	30	5	T1	R		MAL, TAN
M39006/22-0323H	8	30	5	T1		P	MAL, TAN
M39006/22-0544H	15	30	20	T1	R		MAL, TAN
M39006/22-0324H	15	30	20	T1		P	MAL, TAN
M39006/22-0545H	15	30	10	T1	R		MAL, TAN
M39006/22-0325H	15	30	10	T1		P	MAL, TAN
M39006/22-0546H	15	30	5	T1	R		MAL, TAN
M39006/22-0326H	15	30	5	T1		P	MAL, TAN
M39006/22-0547H	40	30	20	T2	R		MAL, TAN
M39006/22-0327H	40	30	20	T2		P	MAL, TAN
M39006/22-0548H	40	30	10	T2	R		MAL, TAN
M39006/22-0328H	40	30	10	T2		P	MAL, TAN
M39006/22-0549H	40	30	5	T2	R		MAL, TAN
M39006/22-0329H	40	30	5	T2		P	MAL, TAN
	Cap.	Rated	Cap.	Case	Level 1	Level 2	
Part Number	Value (uF)	Voltage (V)	Tol (+/- %)	Size	(FRL)	(FRL)	Manufacturer
M39006/22-0550H	68	30	20	T2	R		MAL, TAN
M39006/22-0330H	68	30	20	T2		P	MAL, TAN
M39006/22-0551H	68	30	10	T2	R		MAL, TAN
M39006/22-0331H	68	30	10	T2		P	MAL, TAN
M39006/22-0552H	68	30	5	T2	R		MAL, TAN
M39006/22-0332H	68	30	5	T2		P	MAL, TAN
M39006/22-0553H	100	30	20	T3	R		MAL, TAN
M39006/22-0333H	100	30	20	T3		P	MAL, TAN
M39006/22-0554H	100	30	10	T3	R		MAL, TAN
M39006/22-0334H	100	30	10	T3		P	MAL, TAN
M39006/22-0555H	100	30	5	T3	R		MAL, TAN
M39006/22-0335H	100	30	5	T3		P	MAL, TAN
M39006/22-0556H	150	30	20	T3	R		MAL, TAN
M39006/22-0336H	150	30	20	T3		P	MAL, TAN
M39006/22-0557H	150	30	10	T3	R		MAL, TAN
M39006/22-0337H	150	30	10	T3		P	MAL, TAN
M39006/22-0558H	150	30	5	T3	R		MAL, TAN
M39006/22-0338H	150	30	5	T3		P	MAL, TAN
	Cap.	Rated	Cap.	Case	Level 1	Level 2	
Part Number	Value (uF)	Voltage (V)	Tol (+/- %)	Size	(FRL)	(FRL)	Manufacturer
M39006/22-0559H	300	30	20	T4	R		MAL, TAN
M39006/22-0339H	300	30	20	T4		P	MAL, TAN
M39006/22-0560H	300	30	10	T4	R		MAL, TAN
M39006/22-0340H	300	30	10	T4		P	MAL, TAN
M39006/22-0561H	5	50	20	T1	R		MAL, TAN
M39006/22-0341H	5	50	20	T1		P	MAL, TAN
M39006/22-0562H	5	50	10	T1	R		MAL, TAN
M39006/22-0342H	5	50	10	T1		P	MAL, TAN
M39006/22-0563H	5	50	5	T1	R		MAL, TAN
M39006/22-0343H	5	50	5	T1		P	MAL, TAN

M39006/22-0564H	10	50	20	T1	R		MAL, TAN
M39006/22-0344H	10	50	20	T1		P	MAL, TAN
M39006/22-0565H	10	50	10	T1	R		MAL, TAN
M39006/22-0345H	10	50	10	T1		P	MAL, TAN
M39006/22-0566H	10	50	5	T1	R		MAL, TAN
M39006/22-0346H	10	50	5	T1		P	MAL, TAN
M39006/22-0567H	25	50	20	T2	R		MAL, TAN
M39006/22-0347H	25	50	20	T2		P	MAL, TAN
	Cap.	Rated	Cap.	Case	Level 1	Level 2	
Part Number	Value (uF)	Voltage (V)	Tol (+/- %)	Size	(FRL)	(FRL)	Manufacturer
M39006/22-0568H	25	50	10	T2	R		MAL, TAN
M39006/22-0348H	25	50	10	T2		P	MAL, TAN
M39006/22-0569H	25	50	5	T2	R		MAL, TAN
M39006/22-0349H	25	50	5	T2		P	MAL, TAN
M39006/22-0570H	47	50	20	T2	R		MAL, TAN
M39006/22-0350H	47	50	20	T2		P	MAL, TAN
M39006/22-0571H	47	50	10	T2	R		MAL, TAN
M39006/22-0351H	47	50	10	T2		P	MAL, TAN
M39006/22-0572H	47	50	5	T2	R		MAL, TAN
M39006/22-0352H	47	50	5	T2		P	MAL, TAN
M39006/22-0573H	60	50	20	T3	R		MAL, TAN
M39006/22-0353H	60	50	20	T3		P	MAL, TAN
M39006/22-0574H	60	50	10	T3	R		MAL, TAN
M39006/22-0354H	60	50	10	T3		P	MAL, TAN
M39006/22-0575H	60	50	5	T3	R		MAL, TAN
M39006/22-0355H	60	50	5	T3		P	MAL, TAN
M39006/22-0576H	82	50	20	T3	R		MAL, TAN
M39006/22-0356H	82	50	20	T3		P	MAL, TAN
	Cap.	Rated	Cap.	Case	Level 1	Level 2	
Part Number	Value (uF)	Voltage (V)	Tol (+/- %)	Size	(FRL)	(FRL)	Manufacturer
M39006/22-0577H	82	50	10	T3	R		MAL, TAN
M39006/22-0357H	82	50	10	T3		P	MAL, TAN
M39006/22-0578H	82	50	5	T3	R		MAL, TAN
M39006/22-0358H	82	50	5	T3		P	MAL, TAN
M39006/22-0579H	160	50	20	T4	R		MAL, TAN
M39006/22-0359H	160	50	20	T4		P	MAL, TAN
M39006/22-0580H	160	50	10	T4	R		MAL, TAN
M39006/22-0360H	160	50	10	T4		P	MAL, TAN
M39006/22-0601H	3.5	75	20	T1	R		MAL, TAN
M39006/22-0381H	3.5	75	20	T1		P	MAL, TAN
M39006/22-0602H	3.5	75	10	T1	R		MAL, TAN
M39006/22-0382H	3.5	75	10	T1		P	MAL, TAN
M39006/22-0603H	3.5	75	5	T1	R		MAL, TAN
M39006/22-0383H	3.5	75	5	T1		P	MAL, TAN
M39006/22-0604H	6.8	75	20	T1	R		MAL, TAN
M39006/22-0384H	6.8	75	20	T1		P	MAL, TAN
M39006/22-0605H	6.8	75	10	T1	R		MAL, TAN

M39006/22-0385H	6.8	75	10	T1		P	MAL, TAN
	Cap.	Rated	Cap.	Case	Level 1	Level 2	
Part Number	Value (uF)	Voltage (V)	Tol (+/- %)	Size	(FRL)	(FRL)	Manufacturer
M39006/22-0606H	6.8	75	5	T1	R		MAL, TAN
M39006/22-0386H	6.8	75	5	T1		P	MAL, TAN
M39006/22-0607H	15	75	20	T2	R		MAL, TAN
M39006/22-0387H	15	75	20	T2		P	MAL, TAN
M39006/22-0608H	15	75	10	T2	R		MAL, TAN
M39006/22-0388H	15	75	10	T2		P	MAL, TAN
M39006/22-0609H	15	75	5	T2	R		MAL, TAN
M39006/22-0389H	15	75	5	T2		P	MAL, TAN
M39006/22-0610H	33	75	20	T2	R		MAL, TAN
M39006/22-0390H	33	75	20	T2		P	MAL, TAN
M39006/22-0611H	33	75	10	T2	R		MAL, TAN
M39006/22-0391H	33	75	10	T2		P	MAL, TAN
M39006/22-0612H	33	75	5	T2	R		MAL, TAN
M39006/22-0392H	33	75	5	T2		P	MAL, TAN
M39006/22-0613H	40	75	20	T3	R		MAL, TAN
M39006/22-0393H	40	75	20	T3		P	MAL, TAN
M39006/22-0614H	40	75	10	T3	R		MAL, TAN
M39006/22-0394H	40	75	10	T3		P	MAL, TAN
	Cap.	Rated	Cap.	Case	Level 1	Level 2	
Part Number	Value (uF)	Voltage (V)	Tol (+/- %)	Size	(FRL)	(FRL)	Manufacturer
M39006/22-0615H	40	75	5	T3	R		MAL, TAN
M39006/22-0395H	40	75	5	T3		P	MAL, TAN
M39006/22-0616H	56	75	20	T3	R		MAL, TAN
M39006/22-0396H	56	75	20	T3		P	MAL, TAN
M39006/22-0617H	56	75	10	T3	R		MAL, TAN
M39006/22-0397H	56	75	10	T3		P	MAL, TAN
M39006/22-0618H	56	75	5	T3	R		MAL, TAN
M39006/22-0398H	56	75	5	T3		P	MAL, TAN
M39006/22-0619H	110	75	20	T4	R		MAL, TAN
M39006/22-0399H	110	75	20	T4		P	MAL, TAN
M39006/22-0620H	110	75	10	T4	R		MAL, TAN
M39006/22-0400H	110	75	10	T4		P	MAL, TAN
M39006/22-0621H	2.5	100	20	T1	R		MAL, TAN
M39006/22-0401H	2.5	100	20	T1		P	MAL, TAN
M39006/22-0622H	2.5	100	10	T1	R		MAL, TAN
M39006/22-0402H	2.5	100	10	T1		P	MAL, TAN
M39006/22-0623H	2.5	100	5	T1	R		MAL, TAN
M39006/22-0403H	2.5	100	5	T1		P	MAL, TAN
	Cap.	Rated	Cap.	Case	Level 1	Level 2	
Part Number	Value (uF)	Voltage (V)	Tol (+/- %)	Size	(FRL)	(FRL)	Manufacturer
M39006/22-0624H	4.7	100	20	T1	R		MAL, TAN
M39006/22-0404H	4.7	100	20	T1		P	MAL, TAN
M39006/22-0625H	4.7	100	10	T1	R		MAL, TAN
M39006/22-0405H	4.7	100	10	T1		P	MAL, TAN

M39006/22-0626H	4.7	100	5	T1	R		MAL, TAN
M39006/22-0406H	4.7	100	5	T1		P	MAL, TAN
M39006/22-0627H	11	100	20	T2	R		MAL, TAN
M39006/22-0407H	11	100	20	T2		P	MAL, TAN
M39006/22-0628H	11	100	10	T2	R		MAL, TAN
M39006/22-0408H	11	100	10	T2		P	MAL, TAN
M39006/22-0629H	11	100	5	T2	R		MAL, TAN
M39006/22-0409H	11	100	5	T2		P	MAL, TAN
M39006/22-0630H	22	100	20	T2	R		MAL, TAN
M39006/22-0410H	22	100	20	T2		P	MAL, TAN
M39006/22-0631H	22	100	10	T2	R		MAL, TAN
M39006/22-0411H	22	100	10	T2		P	MAL, TAN
M39006/22-0632H	22	100	5	T2	R		MAL, TAN
M39006/22-0412H	22	100	5	T2		P	MAL, TAN
	Cap.	Rated	Cap.	Case	Level 1	Level 2	
Part Number	Value (uF)	Voltage (V)	Tol (+/- %)	Size	(FRL)	(FRL)	Manufacturer
M39006/22-0633H	30	100	20	T3	R		MAL, TAN
M39006/22-0413H	30	100	20	T3		P	MAL, TAN
M39006/22-0634H	30	100	10	T3	R		MAL, TAN
M39006/22-0414H	30	100	10	T3		P	MAL, TAN
M39006/22-0635H	30	100	5	T3	R		MAL, TAN
M39006/22-0415H	30	100	5	T3		P	MAL, TAN
M39006/22-0636H	43	100	20	T3	R		MAL, TAN
M39006/22-0416H	43	100	20	T3		P	MAL, TAN
M39006/22-0637H	43	100	10	T3	R		MAL, TAN
M39006/22-0417H	43	100	10	T3		P	MAL, TAN
M39006/22-0638H	43	100	5	T3	R		MAL, TAN
M39006/22-0418H	43	100	5	T3		P	MAL, TAN
M39006/22-0639H	86	100	20	T4	R		MAL, TAN
M39006/22-0419H	86	100	20	T4		P	MAL, TAN
M39006/22-0640H	86	100	10	T4	R		MAL, TAN
M39006/22-0420H	86	100	10	T4		P	MAL, TAN

Style CLR79

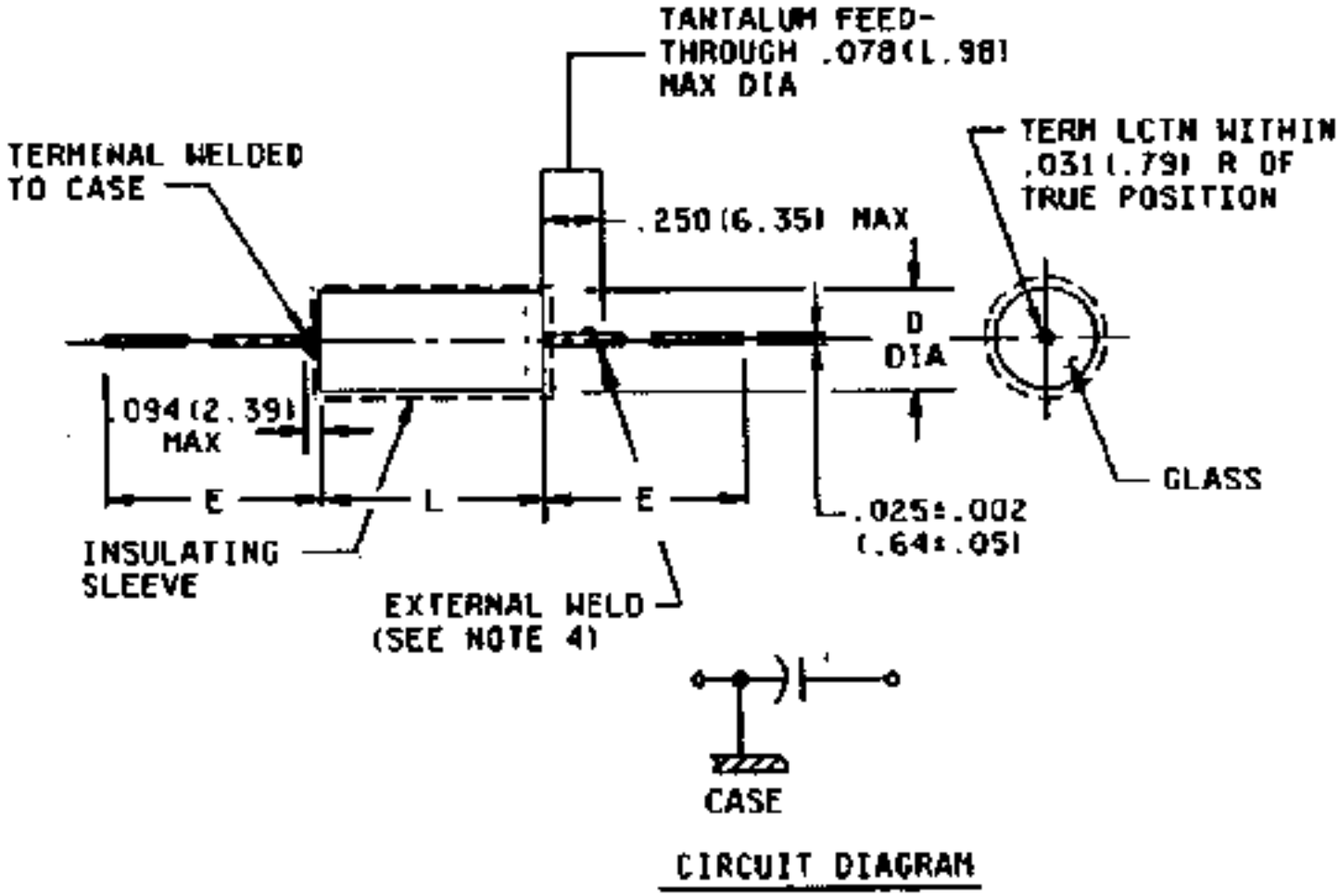

Case Size	L +0.031, -0.016	D (Basic Case) +/-0.016	D (Insulated Case) Max.	E +/-0.250
T1	0.453	0.188	0.219	1.500
T2	0.641	0.281	0.312	2.250
T3	0.766	0.375	0.406	2.250

T4	1.062	0.375	0.406	2.250

Notes:

1) Dimensions are in inches.

2) Metric equivalents are in parentheses.

3) Metric equivalents are given for information only.

4) The weld shall not be enclosed in the end seal.

CLR81 Wet Tantalum Slug Capacitors

	Cap.	Rated	Cap.	Case	Level 1	Level 2	
Part Number	Value (uF)	Voltage (V)	Tol (+/- %)	Size	(FRL)	(FRL)	Manufacturer
M39006/25-0177H	220	6	20	T1	R		MAL, TAN
M39006/25-0089H	220	6	20	T1		P	MAL, TAN
M39006/25-0178H	220	6	10	T1	R		MAL, TAN
M39006/25-0090H	220	6	10	T1		P	MAL, TAN
M39006/25-0179H	820	6	20	T2	R		MAL, TAN
M39006/25-0091H	820	6	20	T2		P	MAL, TAN
M39006/25-0180H	820	6	10	T2	R		MAL, TAN
M39006/25-0092H	820	6	10	T2		P	MAL, TAN
M39006/25-0181H	1500	6	20	T3	R		MAL, TAN
M39006/25-0093H	1500	6	20	T3		P	MAL, TAN
M39006/25-0182H	1500	6	10	T3	R		MAL, TAN
M39006/25-0094H	1500	6	10	T3		P	MAL, TAN
M39006/25-0183H	2200	6	20	T4	R		MAL, TAN
M39006/25-0095H	2200	6	20	T4		P	MAL, TAN
M39006/25-0184H	2200	6	10	T4	R		MAL, TAN
M39006/25-0096H	2200	6	10	T4		P	MAL, TAN
M39006/25-0185H	180	8	20	T1	R		MAL, TAN
M39006/25-0097H	180	8	20	T1		P	MAL, TAN
	Cap.	Rated	Cap.	Case	Level 1	Level 2	
Part Number	Value (uF)	Voltage (V)	Tol (+/- %)	Size	(FRL)	(FRL)	Manufacturer
M39006/25-0186H	180	8	10	T1	R		MAL, TAN
M39006/25-0098H	180	8	10	T1		P	MAL, TAN
M39006/25-0187H	680	8	20	T2	R		MAL, TAN
M39006/25-0099H	680	8	20	T2		P	MAL, TAN
M39006/25-0188H	680	8	10	T2	R		MAL, TAN
M39006/25-0100H	680	8	10	T2		P	MAL, TAN
M39006/25-0189H	1500	8	20	T3	R		MAL, TAN
M39006/25-0101H	1500	8	20	T3		P	MAL, TAN
M39006/25-0190H	1500	8	10	T3	R		MAL, TAN
M39006/25-0102H	1500	8	10	T3		P	MAL, TAN
M39006/25-0191H	1800	8	20	T4	R		MAL, TAN
M39006/25-0103H	1800	8	20	T4		P	MAL, TAN
M39006/25-0192H	1800	8	10	T4	R		MAL, TAN
M39006/25-0104H	1800	8	10	T4		P	MAL, TAN

M39006/25-0193H	150	10	20	T1	R		MAL, TAN
M39006/25-0105H	150	10	20	T1		P	MAL, TAN
M39006/25-0194H	150	10	10	T1	R		MAL, TAN
M39006/25-0106H	150	10	10	T1		P	MAL, TAN
	Cap.	Rated	Cap.	Case	Level 1	Level 2	
Part Number	Value (uF)	Voltage (V)	Tol (+/- %)	Size	(FRL)	(FRL)	Manufacturer
M39006/25-0195H	560	10	20	T2	R		MAL, TAN
M39006/25-0107H	560	10	20	T2		P	MAL, TAN
M39006/25-0196H	560	10	10	T2	R		MAL, TAN
M39006/25-0108H	560	10	10	T2		P	MAL, TAN
M39006/25-0197H	1200	10	20	T3	R		MAL, TAN
M39006/25-0109H	1200	10	20	T3		P	MAL, TAN
M39006/25-0198H	1200	10	10	T3	R		MAL, TAN
M39006/25-0110H	1200	10	10	T3		P	MAL, TAN
M39006/25-0199H	1500	10	20	T4	R		MAL, TAN
M39006/25-0111H	1500	10	20	T4		P	MAL, TAN
M39006/25-0200H	1500	10	10	T4	R		MAL, TAN
M39006/25-0112H	1500	10	10	T4		P	MAL, TAN
M39006/25-0201H	100	15	20	T1	R		MAL, TAN
M39006/25-0113H	100	15	20	T1		P	MAL, TAN
M39006/25-0202H	100	15	10	T1	R		MAL, TAN
M39006/25-0114H	100	15	10	T1		P	MAL, TAN
M39006/25-0203H	390	15	20	T2	R		MAL, TAN
M39006/25-0115H	390	15	20	T2		P	MAL, TAN
	Cap.	Rated	Cap.	Case	Level 1	Level 2	
Part Number	Value (uF)	Voltage (V)	Tol (+/- %)	Size	(FRL)	(FRL)	Manufacturer
M39006/25-0204H	390	15	10	T2	R		MAL, TAN
M39006/25-0116H	390	15	10	T2		P	MAL, TAN
M39006/25-0205H	820	15	20	T3	R		MAL, TAN
M39006/25-0117H	820	15	20	T3		P	MAL, TAN
M39006/25-0206H	820	15	10	T3	R		MAL, TAN
M39006/25-0118H	820	15	10	T3		P	MAL, TAN
M39006/25-0207H	1000	15	20	T4	R		MAL, TAN
M39006/25-0119H	1000	15	20	T4		P	MAL, TAN
M39006/25-0208H	1000	15	10	T4	R		MAL, TAN
M39006/25-0120H	1000	15	10	T4		P	MAL, TAN
M39006/25-0209H	68	25	20	T1	R		MAL, TAN
M39006/25-0121H	68	25	20	T1		P	MAL, TAN
M39006/25-0210H	68	25	10	T1	R		MAL, TAN
M39006/25-0122H	68	25	10	T1		P	MAL, TAN
M39006/25-0211H	270	25	20	T2	R		MAL, TAN
M39006/25-0123H	270	25	20	T2		P	MAL, TAN
M39006/25-0212H	270	25	10	T2	R		MAL, TAN
M39006/25-0124H	270	25	10	T2		P	MAL, TAN
	Cap.	Rated	Cap.	Case	Level 1	Level 2	
Part Number	Value (uF)	Voltage (V)	Tol (+/- %)	Size	(FRL)	(FRL)	Manufacturer
M39006/25-0213H	560	25	20	T3	R		MAL, TAN

M39006/25-0125H	560	25	20	T3		P	MAL, TAN
M39006/25-0214H	560	25	10	T3	R		MAL, TAN
M39006/25-0126H	560	25	10	T3		P	MAL, TAN
M39006/25-0215H	680	25	20	T4	R		MAL, TAN
M39006/25-0127H	680	25	20	T4		P	MAL, TAN
M39006/25-0216H	680	25	10	T4	R		MAL, TAN
M39006/25-0128H	680	25	10	T4		P	MAL, TAN
M39006/25-0217H	56	30	20	T1	R		MAL, TAN
M39006/25-0129H	56	30	20	T1		P	MAL, TAN
M39006/25-0218H	56	30	10	T1	R		MAL, TAN
M39006/25-0130H	56	30	10	T1		P	MAL, TAN
M39006/25-0219H	220	30	20	T2	R		MAL, TAN
M39006/25-0131H	220	30	20	T2		P	MAL, TAN
M39006/25-0220H	220	30	10	T2	R		MAL, TAN
M39006/25-0132H	220	30	10	T2		P	MAL, TAN
M39006/25-0221H	470	30	20	T3	R		MAL, TAN
M39006/25-0133H	470	30	20	T3		P	MAL, TAN
	Cap.	Rated	Cap.	Case	Level 1	Level 2	
Part Number	Value (uF)	Voltage (V)	Tol (+/- %)	Size	(FRL)	(FRL)	Manufacturer
M39006/25-0222H	470	30	10	T3	R		MAL, TAN
M39006/25-0134H	470	30	10	T3		P	MAL, TAN
M39006/25-0223H	560	30	20	T4	R		MAL, TAN
M39006/25-0135H	560	30	20	T4		P	MAL, TAN
M39006/25-0224H	560	30	10	T4	R		MAL, TAN
M39006/25-0136H	560	30	10	T4		P	MAL, TAN
M39006/25-0225H	33	50	20	T1	R		MAL, TAN
M39006/25-0137H	33	50	20	T1		P	MAL, TAN
M39006/25-0226H	33	50	10	T1	R		MAL, TAN
M39006/25-0138H	33	50	10	T1		P	MAL, TAN
M39006/25-0227H	120	50	20	T2	R		MAL, TAN
M39006/25-0139H	120	50	20	T2		P	MAL, TAN
M39006/25-0228H	120	50	10	T2	R		MAL, TAN
M39006/25-0140H	120	50	10	T2		P	MAL, TAN
M39006/25-0229H	270	50	20	T3	R		MAL, TAN
M39006/25-0141H	270	50	20	T3		P	MAL, TAN
M39006/25-0230H	270	50	10	T3	R		MAL, TAN
M39006/25-0142H	270	50	10	T3		P	MAL, TAN
	Cap.	Rated	Cap.	Case	Level 1	Level 2	
Part Number	Value (uF)	Voltage (V)	Tol (+/- %)	Size	(FRL)	(FRL)	Manufacturer
M39006/25-0231H	330	50	20	T4	R		MAL, TAN
M39006/25-0143H	330	50	20	T4		P	MAL, TAN
M39006/25-0232H	330	50	10	T4	R		MAL, TAN
M39006/25-0144H	330	50	10	T4		P	MAL, TAN
M39006/25-0233H	27	60	20	T1	R		MAL, TAN
M39006/25-0145H	27	60	20	T1		P	MAL, TAN
M39006/25-0234H	27	60	10	T1	R		MAL, TAN
M39006/25-0146H	27	60	10	T1		P	MAL, TAN

M39006/25-0235H	100	60	20	T2	R		MAL, TAN
M39006/25-0147H	100	60	20	T2		P	MAL, TAN
M39006/25-0236H	100	60	10	T2	R		MAL, TAN
M39006/25-0148H	100	60	10	T2		P	MAL, TAN
M39006/25-0237H	220	60	20	T3	R		MAL, TAN
M39006/25-0149H	220	60	20	T3		P	MAL, TAN
M39006/25-0238H	220	60	10	T3	R		MAL, TAN
M39006/25-0150H	220	60	10	T3		P	MAL, TAN
M39006/25-0239H	270	60	20	T4	R		MAL, TAN
M39006/25-0151H	270	60	20	T4		P	MAL, TAN
	Cap.	Rated	Cap.	Case	Level 1	Level 2	
Part Number	Value (uF)	Voltage (V)	Tol (+/- %)	Size	(FRL)	(FRL)	Manufacturer
M39006/25-0240H	270	60	10	T4	R		MAL, TAN
M39006/25-0152H	270	60	10	T4		P	MAL, TAN
M39006/25-0241H	22	75	20	T1	R		MAL, TAN
M39006/25-0153H	22	75	20	T1		P	MAL, TAN
M39006/25-0242H	22	75	10	T1	R		MAL, TAN
M39006/25-0154H	22	75	10	T1		P	MAL, TAN
M39006/25-0243H	82	75	20	T2	R		MAL, TAN
M39006/25-0155H	82	75	20	T2		P	MAL, TAN
M39006/25-0244H	82	75	10	T2	R		MAL, TAN
M39006/25-0156H	82	75	10	T2		P	MAL, TAN
M39006/25-0245H	180	75	20	T3	R		MAL, TAN
M39006/25-0157H	180	75	20	T3		P	MAL, TAN
M39006/25-0246H	180	75	10	T3	R		MAL, TAN
M39006/25-0158H	180	75	10	T3		P	MAL, TAN
M39006/25-0247H	220	75	20	T4	R		MAL, TAN
M39006/25-0159H	220	75	20	T4		P	MAL, TAN
M39006/25-0248H	220	75	10	T4	R		MAL, TAN
M39006/25-0160H	220	75	10	T4		P	MAL, TAN
	Cap.	Rated	Cap.	Case	Level 1	Level 2	
Part Number	Value (uF)	Voltage (V)	Tol (+/- %)	Size	(FRL)	(FRL)	Manufacturer
M39006/25-0249H	10	100	20	T1	R		MAL, TAN
M39006/25-0161H	10	100	20	T1		P	MAL, TAN
M39006/25-0250H	10	100	10	T1	R		MAL, TAN
M39006/25-0162H	10	100	10	T1		P	MAL, TAN
M39006/25-0251H	39	100	20	T2	R		MAL, TAN
M39006/25-0163H	39	100	20	T2		P	MAL, TAN
M39006/25-0252H	39	100	10	T2	R		MAL, TAN
M39006/25-0164H	39	100	10	T2		P	MAL, TAN
M39006/25-0253H	68	100	20	T3	R		MAL, TAN
M39006/25-0165H	68	100	20	T3		P	MAL, TAN
M39006/25-0254H	68	100	10	T3	R		MAL, TAN
M39006/25-0166H	68	100	10	T3		P	MAL, TAN
M39006/25-0255H	120	100	20	T4	R		MAL, TAN
M39006/25-0167H	120	100	20	T4		P	MAL, TAN
M39006/25-0256H	120	100	10	T4	R		MAL, TAN

M39006/25-0168H	120	100	10	T4		P	MAL, TAN

Style CLR81

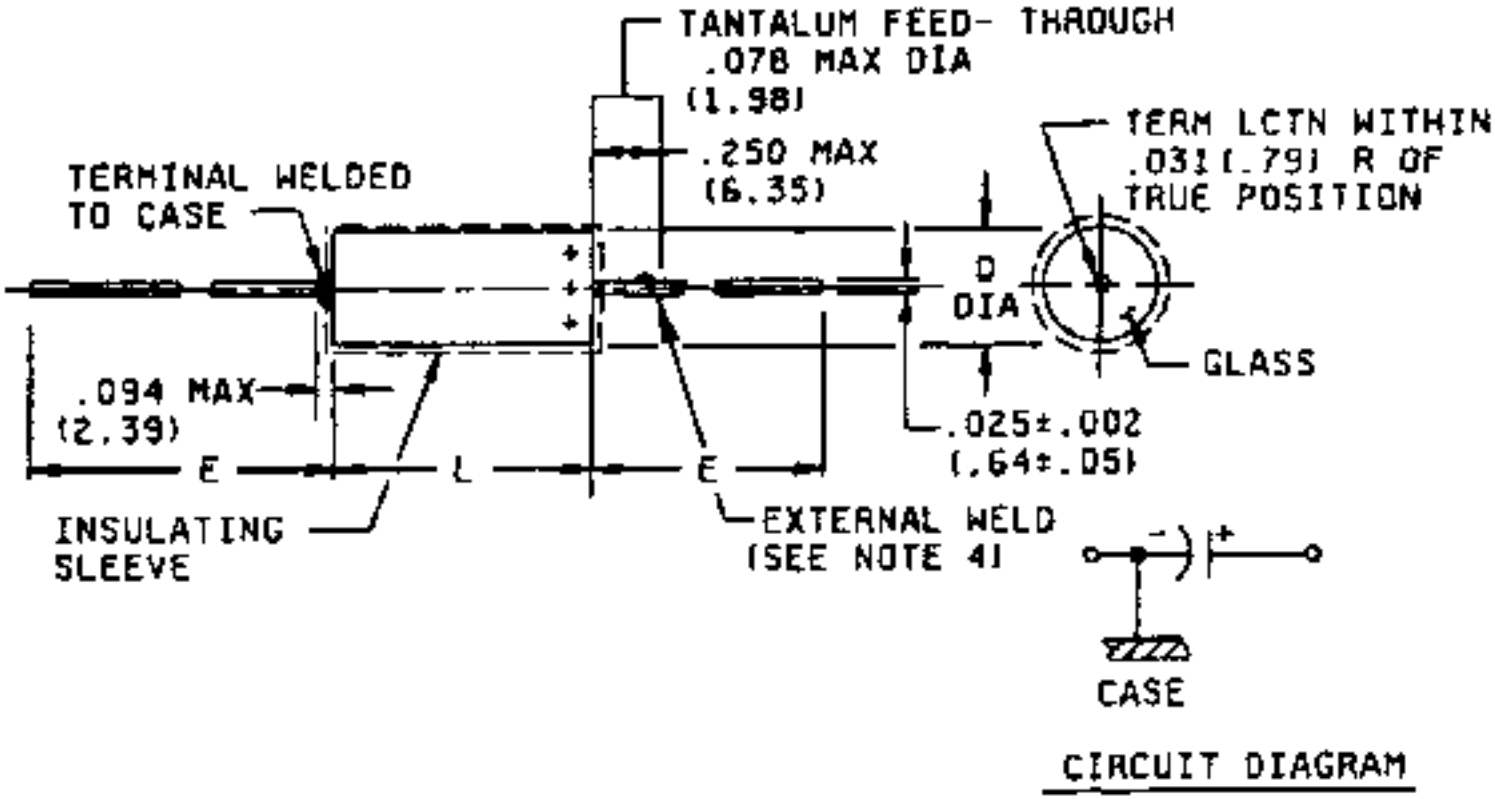

Case Size	L +0.031, -0.016	D (Basic Case) +/-0.016	D (Insulated Case) Max.	E +/-0.250
T1	0.453	0.188	0.219	1.500
T2	0.641	0.281	0.312	2.250
T3	0.766	0.375	0.406	2.250

T4	1.062	0.375	0.406	2.250

Notes:

1) Dimensions are in inches.

2) Metric equivalents are in parentheses.

3) Metric equivalents are given for information only.

4) The weld shall not be enclosed in the end seal.

CLR90 Wet Tantalum Slug Capacitors

	Cap.	Rated	Cap.	Case	Level 1	Level 2	
Part Number	Value (uF)	Voltage (V)	Tol (+/- %)	Size	(FRL)	(FRL)	Manufacturer
M39006/30-0441H	30	6	20	T1	R		MAL, TAN
M39006/30-0221H	30	6	20	T1		P	MAL, TAN
M39006/30-0442H	30	6	10	T1	R		MAL, TAN
M39006/30-0222H	30	6	10	T1		P	MAL, TAN
M39006/30-0443H	30	6	5	T1	R		MAL, TAN
M39006/30-0223H	30	6	5	T1		P	MAL, TAN
M39006/30-0444H	68	6	20	T1	R		MAL, TAN
M39006/30-0224H	68	6	20	T1		P	MAL, TAN
M39006/30-0445H	68	6	10	T1	R		MAL, TAN
M39006/30-0225H	68	6	10	T1		P	MAL, TAN
M39006/30-0446H	68	6	5	T1	R		MAL, TAN
M39006/30-0226H	68	6	5	T1		P	MAL, TAN
M39006/30-0447H	140	6	20	T2	R		MAL, TAN
M39006/30-0227H	140	6	20	T2		P	MAL, TAN
M39006/30-0448H	140	6	10	T2	R		MAL, TAN
M39006/30-0228H	140	6	10	T2		P	MAL, TAN
M39006/30-0449H	140	6	5	T2	R		MAL, TAN
M39006/30-0229H	140	6	5	T2		P	MAL, TAN
	Cap.	Rated	Cap.	Case	Level 1	Level 2	
Part Number	Value (uF)	Voltage (V)	Tol (+/- %)	Size	(FRL)	(FRL)	Manufacturer
M39006/30-0450H	270	6	20	T2	R		MAL, TAN
M39006/30-0230H	270	6	20	T2		P	MAL, TAN
M39006/30-0451H	270	6	10	T2	R		MAL, TAN
M39006/30-0231H	270	6	10	T2		P	MAL, TAN
M39006/30-0452H	270	6	5	T2	R		MAL, TAN
M39006/30-0232H	270	6	5	T2		P	MAL, TAN
M39006/30-0453H	330	6	20	T3	R		MAL, TAN
M39006/30-0233H	330	6	20	T3		P	MAL, TAN
M39006/30-0454H	330	6	10	T3	R		MAL, TAN
M39006/30-0234H	330	6	10	T3		P	MAL, TAN
M39006/30-0455H	330	6	5	T3	R		MAL, TAN
M39006/30-0235H	330	6	5	T3		P	MAL, TAN
M39006/30-0456H	560	6	20	T3	R		MAL, TAN
M39006/30-0236H	560	6	20	T3		P	MAL, TAN

M39006/30-0457H	560	6	10	T3	R		MAL, TAN
M39006/30-0237H	560	6	10	T3		P	MAL, TAN
M39006/30-0458H	560	6	5	T3	R		MAL, TAN
M39006/30-0238H	560	6	5	T3		P	MAL, TAN
	Cap.	Rated	Cap.	Case	Level 1	Level 2	
Part Number	Value (uF)	Voltage (V)	Tol (+/- %)	Size	(FRL)	(FRL)	Manufacturer
M39006/30-0459H	1200	6	20	T4	R		MAL, TAN
M39006/30-0239H	1200	6	20	T4		P	MAL, TAN
M39006/30-0460H	1200	6	10	T4	R		MAL, TAN
M39006/30-0240H	1200	6	10	T4		P	MAL, TAN
M39006/30-0461H	25	8	20	T1	R		MAL, TAN
M39006/30-0241H	25	8	20	T1		P	MAL, TAN
M39006/30-0462H	25	8	10	T1	R		MAL, TAN
M39006/30-0242H	25	8	10	T1		P	MAL, TAN
M39006/30-0463H	25	8	5	T1	R		MAL, TAN
M39006/30-0243H	25	8	5	T1		P	MAL, TAN
M39006/30-0464H	56	8	20	T1	R		MAL, TAN
M39006/30-0244H	56	8	20	T1		P	MAL, TAN
M39006/30-0465H	56	8	10	T1	R		MAL, TAN
M39006/30-0245H	56	8	10	T1		P	MAL, TAN
M39006/30-0466H	56	8	5	T1	R		MAL, TAN
M39006/30-0246H	56	8	5	T1		P	MAL, TAN
M39006/30-0467H	120	8	20	T2	R		MAL, TAN
M39006/30-0247H	120	8	20	T2		P	MAL, TAN
	Cap.	Rated	Cap.	Case	Level 1	Level 2	
Part Number	Value (uF)	Voltage (V)	Tol (+/- %)	Size	(FRL)	(FRL)	Manufacturer
M39006/30-0468H	120	8	10	T2	R		MAL, TAN
M39006/30-0248H	120	8	10	T2		P	MAL, TAN
M39006/30-0469H	120	8	5	T2	R		MAL, TAN
M39006/30-0249H	120	8	5	T2		P	MAL, TAN
M39006/30-0470H	220	8	20	T2	R		MAL, TAN
M39006/30-0250H	220	8	20	T2		P	MAL, TAN
M39006/30-0471H	220	8	10	T2	R		MAL, TAN
M39006/30-0251H	220	8	10	T2		P	MAL, TAN
M39006/30-0472H	220	8	5	T2	R		MAL, TAN
M39006/30-0252H	220	8	5	T2		P	MAL, TAN
M39006/30-0473H	290	8	20	T3	R		MAL, TAN
M39006/30-0253H	290	8	20	T3		P	MAL, TAN
M39006/30-0474H	290	8	10	T3	R		MAL, TAN
M39006/30-0254H	290	8	10	T3		P	MAL, TAN
M39006/30-0475H	290	8	5	T3	R		MAL, TAN
M39006/30-0255H	290	8	5	T3		P	MAL, TAN
M39006/30-0476H	430	8	20	T3	R		MAL, TAN
M39006/30-0256H	430	8	20	T3		P	MAL, TAN
	Cap.	Rated	Cap.	Case	Level 1	Level 2	
Part Number	Value (uF)	Voltage (V)	Tol (+/- %)	Size	(FRL)	(FRL)	Manufacturer
M39006/30-0477H	430	8	10	T3	R		MAL, TAN

M39006/30-0257H	430	8	10	T3		P	MAL, TAN
M39006/30-0478H	430	8	5	T3	R		MAL, TAN
M39006/30-0258H	430	8	5	T3		P	MAL, TAN
M39006/30-0479H	850	8	20	T4	R		MAL, TAN
M39006/30-0259H	850	8	20	T4		P	MAL, TAN
M39006/30-0480H	850	8	10	T4	R		MAL, TAN
M39006/30-0260H	850	8	10	T4		P	MAL, TAN
M39006/30-0481H	20	10	20	T1	R		MAL, TAN
M39006/30-0261H	20	10	20	T1		P	MAL, TAN
M39006/30-0482H	20	10	10	T1	R		MAL, TAN
M39006/30-0262H	20	10	10	T1		P	MAL, TAN
M39006/30-0483H	20	10	5	T1	R		MAL, TAN
M39006/30-0263H	20	10	5	T1		P	MAL, TAN
M39006/30-0484H	47	10	20	T1	R		MAL, TAN
M39006/30-0264H	47	10	20	T1		P	MAL, TAN
M39006/30-0485H	47	10	10	T1	R		MAL, TAN
M39006/30-0265H	47	10	10	T1		P	MAL, TAN
	Cap.	Rated	Cap.	Case	Level 1	Level 2	
Part Number	Value (uF)	Voltage (V)	Tol (+/- %)	Size	(FRL)	(FRL)	Manufacturer
M39006/30-0486H	47	10	5	T1	R		MAL, TAN
M39006/30-0266H	47	10	5	T1		P	MAL, TAN
M39006/30-0487H	100	10	20	T2	R		MAL, TAN
M39006/30-0267H	100	10	20	T2		P	MAL, TAN
M39006/30-0488H	100	10	10	T2	R		MAL, TAN
M39006/30-0268H	100	10	10	T2		P	MAL, TAN
M39006/30-0489H	100	10	5	T2	R		MAL, TAN
M39006/30-0269H	100	10	5	T2		P	MAL, TAN
M39006/30-0490H	180	10	20	T2	R		MAL, TAN
M39006/30-0270H	180	10	20	T2		P	MAL, TAN
M39006/30-0491H	180	10	10	T2	R		MAL, TAN
M39006/30-0271H	180	10	10	T2		P	MAL, TAN
M39006/30-0492H	180	10	5	T2	R		MAL, TAN
M39006/30-0272H	180	10	5	T2		P	MAL, TAN
M39006/30-0493H	250	10	20	T3	R		MAL, TAN
M39006/30-0273H	250	10	20	T3		P	MAL, TAN
M39006/30-0494H	250	10	10	T3	R		MAL, TAN
M39006/30-0274H	250	10	10	T3		P	MAL, TAN
	Cap.	Rated	Cap.	Case	Level 1	Level 2	
Part Number	Value (uF)	Voltage (V)	Tol (+/- %)	Size	(FRL)	(FRL)	Manufacturer
M39006/30-0495H	250	10	5	T3	R		MAL, TAN
M39006/30-0275H	250	10	5	T3		P	MAL, TAN
M39006/30-0496H	390	10	20	T3	R		MAL, TAN
M39006/30-0276H	390	10	20	T3		P	MAL, TAN
M39006/30-0497H	390	10	10	T3	R		MAL, TAN
M39006/30-0277H	390	10	10	T3		P	MAL, TAN
M39006/30-0498H	390	10	5	T3	R		MAL, TAN
M39006/30-0278H	390	10	5	T3		P	MAL, TAN

M39006/30-0499H	750	10	20	T4	R		MAL, TAN
M39006/30-0279H	750	10	20	T4		P	MAL, TAN
M39006/30-0500H	750	10	10	T4	R		MAL, TAN
M39006/30-0280H	750	10	10	T4		P	MAL, TAN
M39006/30-0501H	15	15	20	T1	R		MAL, TAN
M39006/30-0281H	15	15	20	T1		P	MAL, TAN
M39006/30-0502H	15	15	10	T1	R		MAL, TAN
M39006/30-0282H	15	15	10	T1		P	MAL, TAN
M39006/30-0503H	15	15	5	T1	R		MAL, TAN
M39006/30-0283H	15	15	5	T1		P	MAL, TAN
	Cap.	Rated	Cap.	Case	Level 1	Level 2	
Part Number	Value (uF)	Voltage (V)	Tol (+/- %)	Size	(FRL)	(FRL)	Manufacturer
M39006/30-0504H	33	15	20	T1	R		MAL, TAN
M39006/30-0284H	33	15	20	T1		P	MAL, TAN
M39006/30-0505H	33	15	10	T1	R		MAL, TAN
M39006/30-0285H	33	15	10	T1		P	MAL, TAN
M39006/30-0506H	33	15	5	T1	R		MAL, TAN
M39006/30-0286H	33	15	5	T1		P	MAL, TAN
M39006/30-0507H	70	15	20	T2	R		MAL, TAN
M39006/30-0287H	70	15	20	T2		P	MAL, TAN
M39006/30-0508H	70	15	10	T2	R		MAL, TAN
M39006/30-0288H	70	15	10	T2		P	MAL, TAN
M39006/30-0509H	70	15	5	T2	R		MAL, TAN
M39006/30-0289H	70	15	5	T2		P	MAL, TAN
M39006/30-0510H	120	15	20	T2	R		MAL, TAN
M39006/30-0290H	120	15	20	T2		P	MAL, TAN
M39006/30-0511H	120	15	10	T2	R		MAL, TAN
M39006/30-0291H	120	15	10	T2		P	MAL, TAN
M39006/30-0512H	120	15	5	T2	R		MAL, TAN
M39006/30-0292H	120	15	5	T2		P	MAL, TAN
	Cap.	Rated	Cap.	Case	Level 1	Level 2	
Part Number	Value (uF)	Voltage (V)	Tol (+/- %)	Size	(FRL)	(FRL)	Manufacturer
M39006/30-0513H	170	15	20	T3	R		MAL, TAN
M39006/30-0293H	170	15	20	T3		P	MAL, TAN
M39006/30-0514H	170	15	10	T3	R		MAL, TAN
M39006/30-0294H	170	15	10	T3		P	MAL, TAN
M39006/30-0515H	170	15	5	T3	R		MAL, TAN
M39006/30-0295H	170	15	5	T3		P	MAL, TAN
M39006/30-0516H	270	15	20	T3	R		MAL, TAN
M39006/30-0296H	270	15	20	T3		P	MAL, TAN
M39006/30-0517H	270	15	10	T3	R		MAL, TAN
M39006/30-0297H	270	15	10	T3		P	MAL, TAN
M39006/30-0518H	270	15	5	T3	R		MAL, TAN
M39006/30-0298H	270	15	5	T3		P	MAL, TAN
M39006/30-0519H	540	15	20	T4	R		MAL, TAN
M39006/30-0299H	540	15	20	T4		P	MAL, TAN
M39006/30-0520H	540	15	10	T4	R		MAL, TAN

M39006/30-0300H	540	15	10	T4		P	MAL, TAN
M39006/30-0541H	8	30	20	T1	R		MAL, TAN
M39006/30-0321H	8	30	20	T1		P	MAL, TAN
	Cap.	Rated	Cap.	Case	Level 1	Level 2	
Part Number	Value (uF)	Voltage (V)	Tol (+/- %)	Size	(FRL)	(FRL)	Manufacturer
M39006/30-0542H	8	30	10	T1	R		MAL, TAN
M39006/30-0322H	8	30	10	T1		P	MAL, TAN
M39006/30-0543H	8	30	5	T1	R		MAL, TAN
M39006/30-0323H	8	30	5	T1		P	MAL, TAN
M39006/30-0544H	15	30	20	T1	R		MAL, TAN
M39006/30-0324H	15	30	20	T1		P	MAL, TAN
M39006/30-0545H	15	30	10	T1	R		MAL, TAN
M39006/30-0325H	15	30	10	T1		P	MAL, TAN
M39006/30-0546H	15	30	5	T1	R		MAL, TAN
M39006/30-0326H	15	30	5	T1		P	MAL, TAN
M39006/30-0547H	40	30	20	T2	R		MAL, TAN
M39006/30-0327H	40	30	20	T2		P	MAL, TAN
M39006/30-0548H	40	30	10	T2	R		MAL, TAN
M39006/30-0328H	40	30	10	T2		P	MAL, TAN
M39006/30-0549H	40	30	5	T2	R		MAL, TAN
M39006/30-0329H	40	30	5	T2		P	MAL, TAN
M39006/30-0550H	68	30	20	T2	R		MAL, TAN
M39006/30-0330H	68	30	20	T2		P	MAL, TAN
	Cap.	Rated	Cap.	Case	Level 1	Level 2	
Part Number	Value (uF)	Voltage (V)	Tol (+/- %)	Size	(FRL)	(FRL)	Manufacturer
M39006/30-0551H	68	30	10	T2	R		MAL, TAN
M39006/30-0331H	68	30	10	T2		P	MAL, TAN
M39006/30-0552H	68	30	5	T2	R		MAL, TAN
M39006/30-0332H	68	30	5	T2		P	MAL, TAN
M39006/30-0553H	100	30	20	T3	R		MAL, TAN
M39006/30-0333H	100	30	20	T3		P	MAL, TAN
M39006/30-0554H	100	30	10	T3	R		MAL, TAN
M39006/30-0334H	100	30	10	T3		P	MAL, TAN
M39006/30-0555H	100	30	5	T3	R		MAL, TAN
M39006/30-0335H	100	30	5	T3		P	MAL, TAN
M39006/30-0556H	150	30	20	T3	R		MAL, TAN
M39006/30-0336H	150	30	20	T3		P	MAL, TAN
M39006/30-0557H	150	30	10	T3	R		MAL, TAN
M39006/30-0337H	150	30	10	T3		P	MAL, TAN
M39006/30-0558H	150	30	5	T3	R		MAL, TAN
M39006/30-0338H	150	30	5	T3		P	MAL, TAN
M39006/30-0559H	300	30	20	T4	R		MAL, TAN
M39006/30-0339H	300	30	20	T4		P	MAL, TAN
	Cap.	Rated	Cap.	Case	Level 1	Level 2	
Part Number	Value (uF)	Voltage (V)	Tol (+/- %)	Size	(FRL)	(FRL)	Manufacturer
M39006/30-0560H	300	30	10	T4	R		MAL, TAN
M39006/30-0340H	300	30	10	T4		P	MAL, TAN

M39006/30-0561H	5	50	20	T1	R		MAL, TAN
M39006/30-0341H	5	50	20	T1		P	MAL, TAN
M39006/30-0562H	5	50	10	T1	R		MAL, TAN
M39006/30-0342H	5	50	10	T1		P	MAL, TAN
M39006/30-0563H	5	50	5	T1	R		MAL, TAN
M39006/30-0343H	5	50	5	T1		P	MAL, TAN
M39006/30-0564H	10	50	20	T1	R		MAL, TAN
M39006/30-0344H	10	50	20	T1		P	MAL, TAN
M39006/30-0565H	10	50	10	T1	R		MAL, TAN
M39006/30-0345H	10	50	10	T1		P	MAL, TAN
M39006/30-0566H	10	50	5	T1	R		MAL, TAN
M39006/30-0346H	10	50	5	T1		P	MAL, TAN
M39006/30-0567H	25	50	20	T2	R		MAL, TAN
M39006/30-0347H	25	50	20	T2		P	MAL, TAN
M39006/30-0568H	25	50	10	T2	R		MAL, TAN
M39006/30-0348H	25	50	10	T2		P	MAL, TAN
	Cap.	Rated	Cap.	Case	Level 1	Level 2	
Part Number	Value (uF)	Voltage (V)	Tol (+/- %)	Size	(FRL)	(FRL)	Manufacturer
M39006/30-0569H	25	50	5	T2	R		MAL, TAN
M39006/30-0349H	25	50	5	T2		P	MAL, TAN
M39006/30-0570H	47	50	20	T2	R		MAL, TAN
M39006/30-0350H	47	50	20	T2		P	MAL, TAN
M39006/30-0571H	47	50	10	T2	R		MAL, TAN
M39006/30-0351H	47	50	10	T2		P	MAL, TAN
M39006/30-0572H	47	50	5	T2	R		MAL, TAN
M39006/30-0352H	47	50	5	T2		P	MAL, TAN
M39006/30-0573H	60	50	20	T3	R		MAL, TAN
M39006/30-0353H	60	50	20	T3		P	MAL, TAN
M39006/30-0574H	60	50	10	T3	R		MAL, TAN
M39006/30-0354H	60	50	10	T3		P	MAL, TAN
M39006/30-0575H	60	50	5	T3	R		MAL, TAN
M39006/30-0355H	60	50	5	T3		P	MAL, TAN
M39006/30-0576H	82	50	20	T3	R		MAL, TAN
M39006/30-0356H	82	50	20	T3		P	MAL, TAN
M39006/30-0577H	82	50	10	T3	R		MAL, TAN
M39006/30-0357H	82	50	10	T3		P	MAL, TAN
	Cap.	Rated	Cap.	Case	Level 1	Level 2	
Part Number	Value (uF)	Voltage (V)	Tol (+/- %)	Size	(FRL)	(FRL)	Manufacturer
M39006/30-0578H	82	50	5	T3	R		MAL, TAN
M39006/30-0358H	82	50	5	T3		P	MAL, TAN
M39006/30-0579H	160	50	20	T4	R		MAL, TAN
M39006/30-0359H	160	50	20	T4		P	MAL, TAN
M39006/30-0580H	160	50	10	T4	R		MAL, TAN
M39006/30-0360H	160	50	10	T4		P	MAL, TAN
M39006/30-0601H	3.5	75	20	T1	R		MAL, TAN
M39006/30-0381H	3.5	75	20	T1		P	MAL, TAN
M39006/30-0602H	3.5	75	10	T1	R		MAL, TAN

M39006/30-0382H	3.5	75	10	T1		P	MAL, TAN
M39006/30-0603H	3.5	75	5	T1	R		MAL, TAN
M39006/30-0383H	3.5	75	5	T1		P	MAL, TAN
M39006/30-0604H	6.8	75	20	T1	R		MAL, TAN
M39006/30-0384H	6.8	75	20	T1		P	MAL, TAN
M39006/30-0605H	6.8	75	10	T1	R		MAL, TAN
M39006/30-0385H	6.8	75	10	T1		P	MAL, TAN
M39006/30-0606H	6.8	75	5	T1	R		MAL, TAN
M39006/30-0386H	6.8	75	5	T1		P	MAL, TAN
	Cap.	Rated	Cap.	Case	Level 1	Level 2	
Part Number	Value (uF)	Voltage (V)	Tol (+/- %)	Size	(FRL)	(FRL)	Manufacturer
M39006/30-0607H	15	75	20	T2	R		MAL, TAN
M39006/30-0387H	15	75	20	T2		P	MAL, TAN
M39006/30-0608H	15	75	10	T2	R		MAL, TAN
M39006/30-0388H	15	75	10	T2		P	MAL, TAN
M39006/30-0609H	15	75	5	T2	R		MAL, TAN
M39006/30-0389H	15	75	5	T2		P	MAL, TAN
M39006/30-0610H	33	75	20	T2	R		MAL, TAN
M39006/30-0390H	33	75	20	T2		P	MAL, TAN
M39006/30-0611H	33	75	10	T2	R		MAL, TAN
M39006/30-0391H	33	75	10	T2		P	MAL, TAN
M39006/30-0612H	33	75	5	T2	R		MAL, TAN
M39006/30-0392H	33	75	5	T2		P	MAL, TAN
M39006/30-0613H	40	75	20	T3	R		MAL, TAN
M39006/30-0393H	40	75	20	T3		P	MAL, TAN
M39006/30-0614H	40	75	10	T3	R		MAL, TAN
M39006/30-0394H	40	75	10	T3		P	MAL, TAN
M39006/30-0615H	40	75	5	T3	R		MAL, TAN
M39006/30-0395H	40	75	5	T3		P	MAL, TAN
	Cap.	Rated	Cap.	Case	Level 1	Level 2	
Part Number	Value (uF)	Voltage (V)	Tol (+/- %)	Size	(FRL)	(FRL)	Manufacturer
M39006/30-0616H	56	75	20	T3	R		MAL, TAN
M39006/30-0396H	56	75	20	T3		P	MAL, TAN
M39006/30-0617H	56	75	10	T3	R		MAL, TAN
M39006/30-0397H	56	75	10	T3		P	MAL, TAN
M39006/30-0618H	56	75	5	T3	R		MAL, TAN
M39006/30-0398H	56	75	5	T3		P	MAL, TAN
M39006/30-0619H	110	75	20	T4	R		MAL, TAN
M39006/30-0399H	110	75	20	T4		P	MAL, TAN
M39006/30-0620H	110	75	10	T4	R		MAL, TAN
M39006/30-0400H	110	75	10	T4		P	MAL, TAN
M39006/30-0621H	2.5	100	20	T1	R		MAL, TAN
M39006/30-0401H	2.5	100	20	T1		P	MAL, TAN
M39006/30-0622H	2.5	100	10	T1	R		MAL, TAN
M39006/30-0402H	2.5	100	10	T1		P	MAL, TAN
M39006/30-0623H	2.5	100	5	T1	R		MAL, TAN
M39006/30-0403H	2.5	100	5	T1		P	MAL, TAN

M39006/30-0624H	4.7	100	20	T1	R		MAL, TAN
M39006/30-0404H	4.7	100	20	T1		P	MAL, TAN
	Cap.	Rated	Cap.	Case	Level 1	Level 2	
Part Number	Value (uF)	Voltage (V)	Tol (+/- %)	Size	(FRL)	(FRL)	Manufacturer
M39006/30-0625H	4.7	100	10	T1	R		MAL, TAN
M39006/30-0405H	4.7	100	10	T1		P	MAL, TAN
M39006/30-0626H	4.7	100	5	T1	R		MAL, TAN
M39006/30-0406H	4.7	100	5	T1		P	MAL, TAN
M39006/30-0627H	11	100	20	T2	R		MAL, TAN
M39006/30-0407H	11	100	20	T2		P	MAL, TAN
M39006/30-0628H	11	100	10	T2	R		MAL, TAN
M39006/30-0408H	11	100	10	T2		P	MAL, TAN
M39006/30-0629H	11	100	5	T2	R		MAL, TAN
M39006/30-0409H	11	100	5	T2		P	MAL, TAN
M39006/30-0630H	22	100	20	T2	R		MAL, TAN
M39006/30-0410H	22	100	20	T2		P	MAL, TAN
M39006/30-0631H	22	100	10	T2	R		MAL, TAN
M39006/30-0411H	22	100	10	T2		P	MAL, TAN
M39006/30-0632H	22	100	5	T2	R		MAL, TAN
M39006/30-0412H	22	100	5	T2		P	MAL, TAN
M39006/30-0633H	30	100	20	T3	R		MAL, TAN
M39006/30-0413H	30	100	20	T3		P	MAL, TAN
	Cap.	Rated	Cap.	Case	Level 1	Level 2	
Part Number	Value (uF)	Voltage (V)	Tol (+/- %)	Size	(FRL)	(FRL)	Manufacturer
M39006/30-0634H	30	100	10	T3	R		MAL, TAN
M39006/30-0414H	30	100	10	T3		P	MAL, TAN
M39006/30-0635H	30	100	5	T3	R		MAL, TAN
M39006/30-0415H	30	100	5	T3		P	MAL, TAN
M39006/30-0636H	43	100	20	T3	R		MAL, TAN
M39006/30-0416H	43	100	20	T3		P	MAL, TAN
M39006/30-0637H	43	100	10	T3	R		MAL, TAN
M39006/30-0417H	43	100	10	T3		P	MAL, TAN
M39006/30-0638H	43	100	5	T3	R		MAL, TAN
M39006/30-0418H	43	100	5	T3		P	MAL, TAN
M39006/30-0639H	86	100	20	T4	R		MAL, TAN
M39006/30-0419H	86	100	20	T4		P	MAL, TAN
M39006/30-0640H	86	100	10	T4	R		MAL, TAN
M39006/30-0420H	86	100	10	T4		P	MAL, TAN

Style CLR90

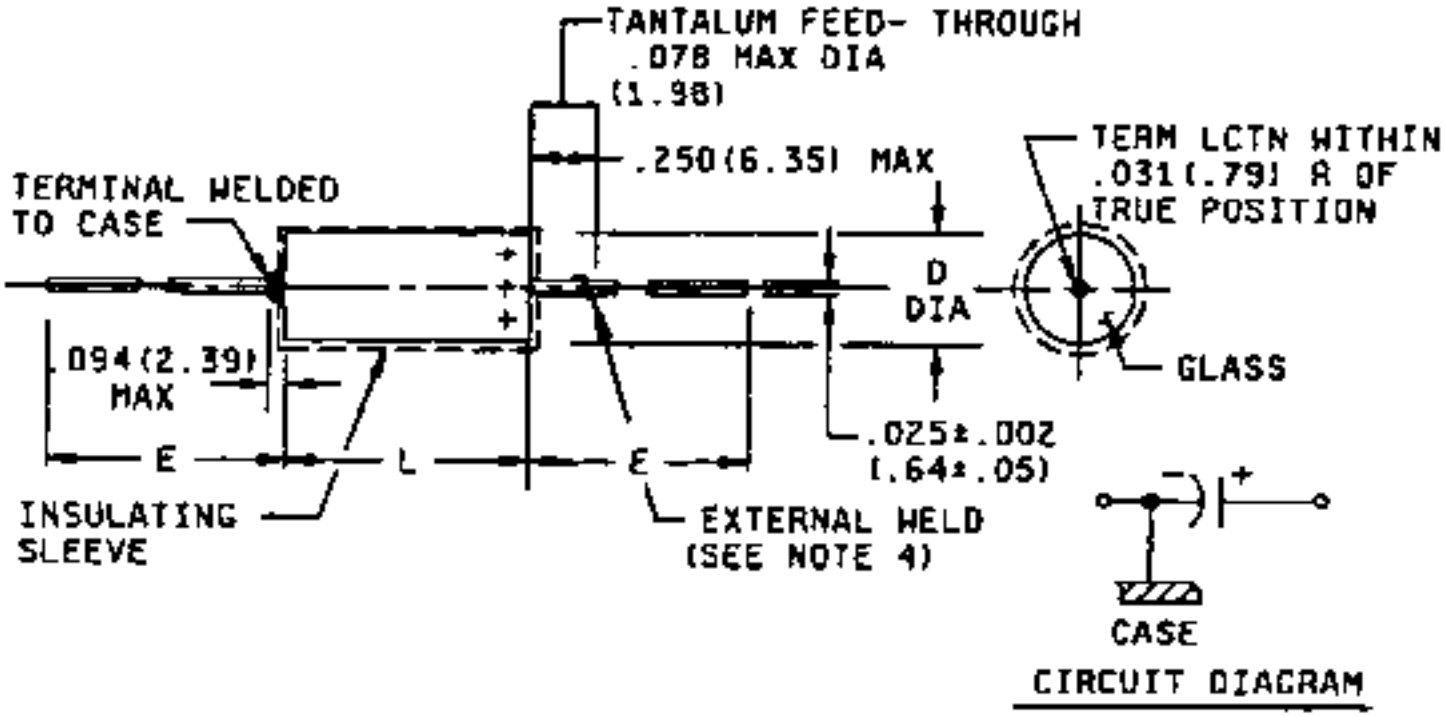

Case Size	L +0.031, -0.016	D (Basic Case) +/-0.016	D (Insulated Case) Max.	E +/-0.250
T1	0.453	0.188	0.219	1.500
T2	0.641	0.281	0.312	2.250
T3	0.766	0.375	0.406	2.250
T4	1.062	0.375	0.406	2.250

Notes:

1) Dimensions are in inches.

2) Metric equivalents are in parentheses.

3) Metric equivalents are given for information only.

4) The weld shall not be enclosed in the end seal.

CLR91 Wet Tantalum Slug Capacitors

	Cap.	Rated	Cap.	Case	Level 1	Level 2	
Part Number	Value (uF)	Voltage (V)	Tol (+/- %)	Size	(FRL)	(FRL)	Manufacturer
M39006/31-0177H	220	6	20	T1	R		MAL, TAN
M39006/31-0089H	220	6	20	T1		P	MAL, TAN
M39006/31-0178H	220	6	10	T1	R		MAL, TAN
M39006/31-0090H	220	6	10	T1		P	MAL, TAN
M39006/31-0179H	820	6	20	T2	R		MAL, TAN
M39006/31-0091H	820	6	20	T2		P	MAL, TAN
M39006/31-0180H	820	6	10	T2	R		MAL, TAN
M39006/31-0092H	820	6	10	T2		P	MAL, TAN
M39006/31-0181H	1500	6	20	T3	R		MAL, TAN
M39006/31-0093H	1500	6	20	T3		P	MAL, TAN
M39006/31-0182H	1500	6	10	T3	R		MAL, TAN
M39006/31-0094H	1500	6	10	T3		P	MAL, TAN
M39006/31-0183H	2200	6	20	T4	R		MAL, TAN
M39006/31-0095H	2200	6	20	T4		P	MAL, TAN
M39006/31-0184H	2200	6	10	T4	R		MAL, TAN
M39006/31-0096H	2200	6	10	T4		P	MAL, TAN
M39006/31-0185H	180	8	20	T1	R		MAL, TAN
M39006/31-0097H	180	8	20	T1		P	MAL, TAN
	Cap.	Rated	Cap.	Case	Level 1	Level 2	
Part Number	Value (uF)	Voltage (V)	Tol (+/- %)	Size	(FRL)	(FRL)	Manufacturer
M39006/31-0186H	180	8	10	T1	R		MAL, TAN
M39006/31-0098H	180	8	10	T1		P	MAL, TAN
M39006/31-0187H	680	8	20	T2	R		MAL, TAN
M39006/31-0099H	680	8	20	T2		P	MAL, TAN
M39006/31-0188H	680	8	10	T2	R		MAL, TAN
M39006/31-0100H	680	8	10	T2		P	MAL, TAN
M39006/31-0189H	1500	8	20	T3	R		MAL, TAN
M39006/31-0101H	1500	8	20	T3		P	MAL, TAN
M39006/31-0190H	1500	8	10	T3	R		MAL, TAN
M39006/31-0102H	1500	8	10	T3		P	MAL, TAN
M39006/31-0191H	1800	8	20	T4	R		MAL, TAN
M39006/31-0103H	1800	8	20	T4		P	MAL, TAN
M39006/31-0192H	1800	8	10	T4	R		MAL, TAN
M39006/31-0104H	1800	8	10	T4		P	MAL, TAN
M39006/31-0193H	150	10	20	T1	R		MAL, TAN
M39006/31-0105H	150	10	20	T1		P	MAL, TAN
M39006/31-0194H	150	10	10	T1	R		MAL, TAN
M39006/31-0106H	150	10	10	T1		P	MAL, TAN
	Cap.	Rated	Cap.	Case	Level 1	Level 2	

Part Number	Value (uF)	Voltage (V)	Tol (+/- %)	Size	(FRL)	(FRL)	Manufacturer
M39006/31-0195H	560	10	20	T2	R		MAL, TAN
M39006/31-0107H	560	10	20	T2		P	MAL, TAN
M39006/31-0196H	560	10	10	T2	R		MAL, TAN
M39006/31-0108H	560	10	10	T2		P	MAL, TAN
M39006/31-0197H	1200	10	20	T3	R		MAL, TAN
M39006/31-0109H	1200	10	20	T3		P	MAL, TAN
M39006/31-0198H	1200	10	10	T3	R		MAL, TAN
M39006/31-0110H	1200	10	10	T3		P	MAL, TAN
M39006/31-0199H	1500	10	20	T4	R		MAL, TAN
M39006/31-0111H	1500	10	20	T4		P	MAL, TAN
M39006/31-0200H	1500	10	10	T4	R		MAL, TAN
M39006/31-0112H	1500	10	10	T4		P	MAL, TAN
M39006/31-0201H	100	15	20	T1	R		MAL, TAN
M39006/31-0113H	100	15	20	T1		P	MAL, TAN
M39006/31-0202H	100	15	10	T1	R		MAL, TAN
M39006/31-0114H	100	15	10	T1		P	MAL, TAN
M39006/31-0203H	390	15	20	T2	R		MAL, TAN
M39006/31-0115H	390	15	20	T2		P	MAL, TAN
	Cap.	Rated	Cap.	Case	Level 1	Level 2	
Part Number	Value (uF)	Voltage (V)	Tol (+/- %)	Size	(FRL)	(FRL)	Manufacturer
M39006/31-0204H	390	15	10	T2	R		MAL, TAN
M39006/31-0116H	390	15	10	T2		P	MAL, TAN
M39006/31-0205H	820	15	20	T3	R		MAL, TAN
M39006/31-0117H	820	15	20	T3		P	MAL, TAN
M39006/31-0206H	820	15	10	T3	R		MAL, TAN
M39006/31-0118H	820	15	10	T3		P	MAL, TAN
M39006/31-0207H	1000	15	20	T4	R		MAL, TAN
M39006/31-0119H	1000	15	20	T4		P	MAL, TAN
M39006/31-0208H	1000	15	10	T4	R		MAL, TAN
M39006/31-0120H	1000	15	10	T4		P	MAL, TAN
M39006/31-0209H	68	25	20	T1	R		MAL, TAN
M39006/31-0121H	68	25	20	T1		P	MAL, TAN
M39006/31-0210H	68	25	10	T1	R		MAL, TAN
M39006/31-0122H	68	25	10	T1		P	MAL, TAN
M39006/31-0211H	270	25	20	T2	R		MAL, TAN
M39006/31-0123H	270	25	20	T2		P	MAL, TAN
M39006/31-0212H	270	25	10	T2	R		MAL, TAN
M39006/31-0124H	270	25	10	T2		P	MAL, TAN
	Cap.	Rated	Cap.	Case	Level 1	Level 2	
Part Number	Value (uF)	Voltage (V)	Tol (+/- %)	Size	(FRL)	(FRL)	Manufacturer
M39006/31-0213H	560	25	20	T3	R		MAL, TAN
M39006/31-0125H	560	25	20	T3		P	MAL, TAN
M39006/31-0214H	560	25	10	T3	R		MAL, TAN
M39006/31-0126H	560	25	10	T3		P	MAL, TAN
M39006/31-0215H	680	25	20	T4	R		MAL, TAN
M39006/31-0127H	680	25	20	T4		P	MAL, TAN

M39006/31-0216H	680	25	10	T4	R		MAL, TAN
M39006/31-0128H	680	25	10	T4		P	MAL, TAN
M39006/31-0217H	56	30	20	T1	R		MAL, TAN
M39006/31-0129H	56	30	20	T1		P	MAL, TAN
M39006/31-0218H	56	30	10	T1	R		MAL, TAN
M39006/31-0130H	56	30	10	T1		P	MAL, TAN
M39006/31-0219H	220	30	20	T2	R		MAL, TAN
M39006/31-0131H	220	30	20	T2		P	MAL, TAN
M39006/31-0220H	220	30	10	T2	R		MAL, TAN
M39006/31-0132H	220	30	10	T2		P	MAL, TAN
M39006/31-0221H	470	30	20	T3	R		MAL, TAN
M39006/31-0133H	470	30	20	T3		P	MAL, TAN
	Cap.	Rated	Cap.	Case	Level 1	Level 2	
Part Number	Value (uF)	Voltage (V)	Tol (+/- %)	Size	(FRL)	(FRL)	Manufacturer
M39006/31-0222H	470	30	10	T3	R		MAL, TAN
M39006/31-0134H	470	30	10	T3		P	MAL, TAN
M39006/31-0223H	560	30	20	T4	R		MAL, TAN
M39006/31-0135H	560	30	20	T4		P	MAL, TAN
M39006/31-0224H	560	30	10	T4	R		MAL, TAN
M39006/31-0136H	560	30	10	T4		P	MAL, TAN
M39006/31-0225H	33	50	20	T1	R		MAL, TAN
M39006/31-0137H	33	50	20	T1		P	MAL, TAN
M39006/31-0226H	33	50	10	T1	R		MAL, TAN
M39006/31-0138H	33	50	10	T1		P	MAL, TAN
M39006/31-0227H	120	50	20	T2	R		MAL, TAN
M39006/31-0139H	120	50	20	T2		P	MAL, TAN
M39006/31-0228H	120	50	10	T2	R		MAL, TAN
M39006/31-0140H	120	50	10	T2		P	MAL, TAN
M39006/31-0229H	270	50	20	T3	R		MAL, TAN
M39006/31-0141H	270	50	20	T3		P	MAL, TAN
M39006/31-0230H	270	50	10	T3	R		MAL, TAN
M39006/31-0142H	270	50	10	T3		P	MAL, TAN
	Cap.	Rated	Cap.	Case	Level 1	Level 2	
Part Number	Value (uF)	Voltage (V)	Tol (+/- %)	Size	(FRL)	(FRL)	Manufacturer
M39006/31-0231H	330	50	20	T4	R		MAL, TAN
M39006/31-0143H	330	50	20	T4		P	MAL, TAN
M39006/31-0232H	330	50	10	T4	R		MAL, TAN
M39006/31-0144H	330	50	10	T4		P	MAL, TAN
M39006/31-0233H	27	60	20	T1	R		MAL, TAN
M39006/31-0145H	27	60	20	T1		P	MAL, TAN
M39006/31-0234H	27	60	10	T1	R		MAL, TAN
M39006/31-0146H	27	60	10	T1		P	MAL, TAN
M39006/31-0235H	100	60	20	T2	R		MAL, TAN
M39006/31-0147H	100	60	20	T2		P	MAL, TAN
M39006/31-0236H	100	60	10	T2	R		MAL, TAN
M39006/31-0148H	100	60	10	T2		P	MAL, TAN
M39006/31-0237H	220	60	20	T3	R		MAL, TAN

M39006/31-0149H	220	60	20	T3		P	MAL, TAN
M39006/31-0238H	220	60	10	T3	R		MAL, TAN
M39006/31-0150H	220	60	10	T3		P	MAL, TAN
M39006/31-0239H	270	60	20	T4	R		MAL, TAN
M39006/31-0151H	270	60	20	T4		P	MAL, TAN
	Cap.	Rated	Cap.	Case	Level 1	Level 2	
Part Number	Value (uF)	Voltage (V)	Tol (+/- %)	Size	(FRL)	(FRL)	Manufacturer
M39006/31-0240H	270	60	10	T4	R		MAL, TAN
M39006/31-0152H	270	60	10	T4		P	MAL, TAN
M39006/31-0241H	22	75	20	T1	R		MAL, TAN
M39006/31-0153H	22	75	20	T1		P	MAL, TAN
M39006/31-0242H	22	75	10	T1	R		MAL, TAN
M39006/31-0154H	22	75	10	T1		P	MAL, TAN
M39006/31-0243H	82	75	20	T2	R		MAL, TAN
M39006/31-0155H	82	75	20	T2		P	MAL, TAN
M39006/31-0244H	82	75	10	T2	R		MAL, TAN
M39006/31-0156H	82	75	10	T2		P	MAL, TAN
M39006/31-0245H	180	75	20	T3	R		MAL, TAN
M39006/31-0157H	180	75	20	T3		P	MAL, TAN
M39006/31-0246H	180	75	10	T3	R		MAL, TAN
M39006/31-0158H	180	75	10	T3		P	MAL, TAN
M39006/31-0247H	220	75	20	T4	R		MAL, TAN
M39006/31-0159H	220	75	20	T4		P	MAL, TAN
M39006/31-0248H	220	75	10	T4	R		MAL, TAN
M39006/31-0160H	220	75	10	T4		P	MAL, TAN
	Cap.	Rated	Cap.	Case	Level 1	Level 2	
Part Number	Value (uF)	Voltage (V)	Tol (+/- %)	Size	(FRL)	(FRL)	Manufacturer
M39006/31-0249H	10	100	20	T1	R		MAL, TAN
M39006/31-0161H	10	100	20	T1		P	MAL, TAN
M39006/31-0250H	10	100	10	T1	R		MAL, TAN
M39006/31-0162H	10	100	10	T1		P	MAL, TAN
M39006/31-0251H	39	100	20	T2	R		MAL, TAN
M39006/31-0163H	39	100	20	T2		P	MAL, TAN
M39006/31-0252H	39	100	10	T2	R		MAL, TAN
M39006/31-0164H	39	100	10	T2		P	MAL, TAN
M39006/31-0253H	68	100	20	T3	R		MAL, TAN
M39006/31-0165H	68	100	20	T3		P	MAL, TAN
M39006/31-0254H	68	100	10	T3	R		MAL, TAN
M39006/31-0166H	68	100	10	T3		P	MAL, TAN
M39006/31-0255H	120	100	20	T4	R		MAL, TAN
M39006/31-0167H	120	100	20	T4		P	MAL, TAN
M39006/31-0256H	120	100	10	T4	R		MAL, TAN
M39006/31-0168H	120	100	10	T4		P	MAL, TAN

Style CLR91

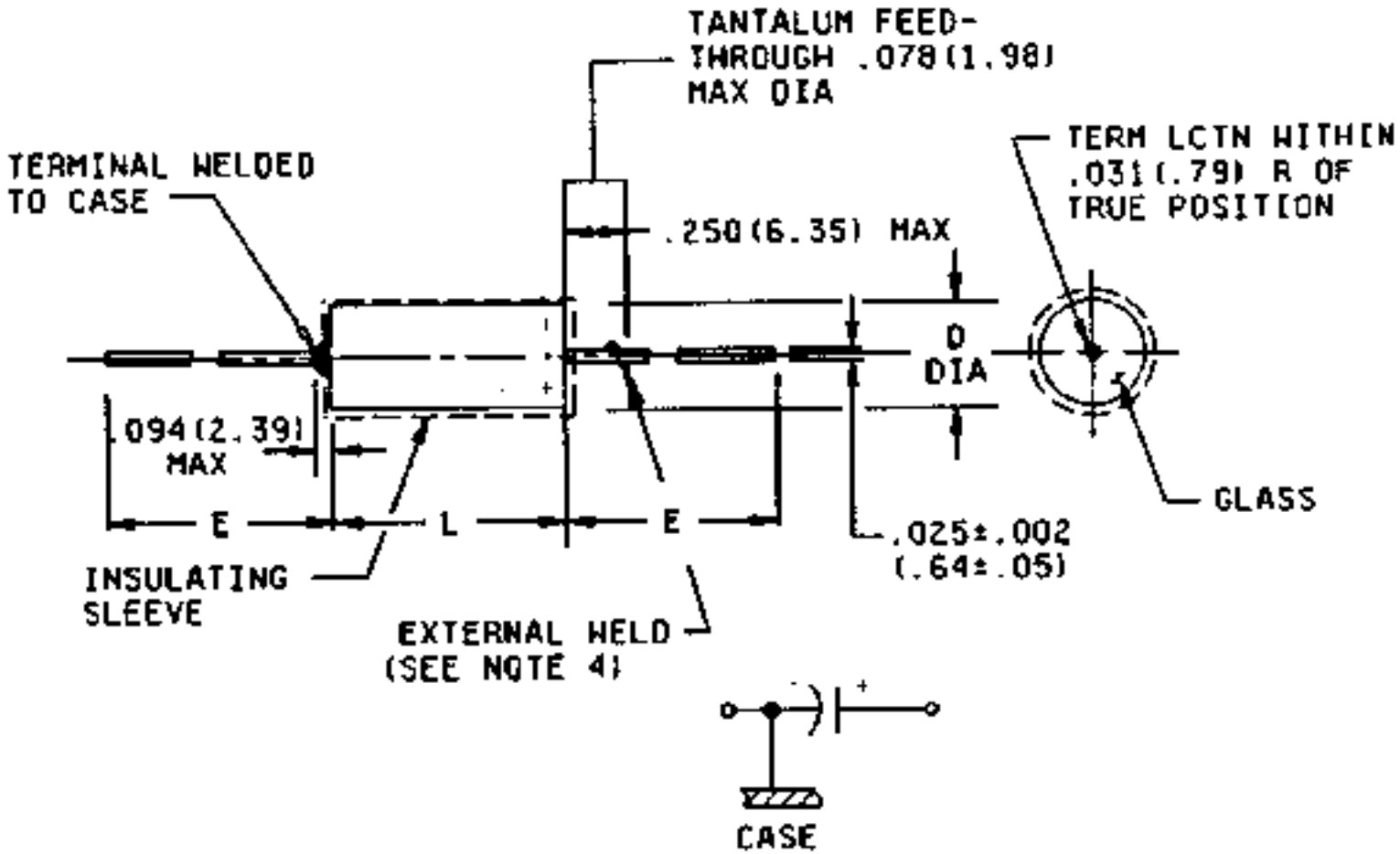

CIRCUIT DIAGRAM

Case Size	L +0.031, -0.016	D (Basic Case) +/-0.016	D (Insulated Case) Max.	E +/-0.250
T1	0.453	0.188	0.219	1.500

T2	0.641	0.281	0.312	2.250
T3	0.766	0.375	0.406	2.250
T4	1.062	0.375	0.406	2.250

Notes:

1) Dimensions are in inches.

2) Metric equivalents are in parentheses.

3) Metric equivalents are given for information only.

4) The weld shall not be enclosed in the end seal.

Go to -

NEPP

|

NPSL

|

Capacitors

MIL-PRF-55365, CAPACITORS

Chip, Fixed, Tantalum, Established Reliability

CWR Styles

Part Number/Ordering Explanation

Important! Application Notes

Revision History for MIL-PRF-55365 Listing in the NPSL

Last Revision: 03/11/03

Click on the link below to see the associated parts selection listing:

Style	Detail Specification	Description (Click Link Below for Dimensions)
CWR06	MIL-PRF-55365/4	Conformally Coated Tantalum Chips 2.2 uF to 100 uF (4 V) 1.5 uF to 68 uF (6 V) 1.0 uF to 47 uF (10 V) 0.68 uF to 33 uF (15 V) 0.47 uF to 22 uF (20 V) 0.33 uF to 15 uF (25 V) 0.22 u
CWR09	MIL-PRF-55365/4	Molded Tantalum Chips 2.2 uF to 100 uF (4 V) 1.5 uF to 68 uF (6 V) 1.0 uF to 47 uF (10 V) 0.68 uF to 33 uF (15 V) 0.47 uF to 22 uF (20 V) 0.33 uF to 15 uF (25 V) 0.22 uF to 6.8 uF
CWR11	MIL-PRF-55365/8	Molded Tantalum Chips (Metric) 2.2 uF to 100 uF (4 V) 1.5 uF to 68 uF (6 V) 1.0 uF to 47 uF (10 V) 0.68 uF to 33 uF (15 V) 0.47 uF to 22 uF (20 V) 0.33 uF to 15 uF (25 V) 0.1 uF to

APPLICATION NOTES FOR MIL-PRF-55365

1) Solid tantalum capacitors are subject to inrush current failures. Effective series resistance for MIL-PRF-55365 capacitors should be at least 0.3 ohms/volt or 1 ohm whichever is greater, for Level 1 applications and at least 0.1 ohms/volt or 1 ohm whichever is greater, for Level 2 applications. MIL-PRF-55365 capacitors should not be used in power supply filters.

2) For Level 1 applications MIL-PRF-55365 capacitors should be subjected to either option "B" or "C" surge current testing (at -55deg.C and +85deg.C) in accordance with MIL-PRF-55365 and associated slash sheet. For Level 2 applications MIL-PRF-55365 capacitors should be subjected to option "A" surge current testing (at +25deg.C) as specified by MIL-PRF-55365 and associated slash sheet. For Level 3 applications MIL-PRF-55365 capacitors used in single point failure or mission critical locations should be subjected to option "A" surge current testing (at +25deg.C). NOTE: MIL-PRF-55365 and slash sheets provide the procuring activity the option to order capacitors with any of 3 different surge current tests performed on 100% of the capacitors as part of the manufacturer's outgoing conformance inspection. See the MIL spec or the

part number ordering explanation

table for details.

3)

These tantalum capacitors are polar devices that are sensitive to reverse bias voltage.

Prolonged exposure to high levels of reverse voltage can produce very high leakage currents and short circuits. Short circuited tantalum capacitors can ignite and/or produce excessive heat resulting in extreme damage to circuit boards. Reverse bias application of these parts should be avoided. M

IL-PRF-55365 offers no guidance on the reverse bias performance of these capacitors. Capacitor manufacturer guidelines are generally very conservative urging against any prolonged exposure to reverse bias. Some limited experimental data exists that suggests some capacitors may be able to indefinitely withstand room temperature reverse voltages on the order of 15 to 25% of rated voltage. However, all of the factors affecting the reverse bias behavior (including size and rating of the capacitor, effects of circuit current limiting and ambient temperature) have not been studied. Refer to NEPAG Lesson Learned Bulletin

NEPAG-LLB-2001-002

and NEPAG Study Report "

Reverse Bias Behavior of Surface Mount Solid Tantalum Capacitors"

for further details.

4)

Users are urged to carefully confirm the proper orientation of all tantalum capacitors after installation. The convention for polarity markings is often a source of potential confusion.

"Chip" tantalum capacitor styles are prone to being installed improperly because they may be very small and the polarity identifier can be difficult to see.

Polarity idenitifcation for CWR06 capacitors may be particularly difficult to see. Polarity for these devices is determined by a small protrusion of the anode riser wire from the anode ("+") termination end cap.

Historically, reverse polarity failures have been observed that resulted from:

Incorrect initial installation (part installed backwards)

Incorrect installation during rework (original part installed correctly, but replacement part put in backwards)

Correct circuit design, but incorrect artwork on the printed wiring board (part installed correctly according to the artwork, but actually in backwards)

Incorrect circuit design (printed wiring board artwork correct per circuit layout, but design error resulted in part in backwards)

Refer to NEPAG Lesson Learned Bulletin

NEPAG-LLB-2001-002

for further details

Revision History for MIL-PRF-55365 Listing in the NPSL

03/11/03	Added application Note 4 to remind about potential for putting these capacitors in backwards by mistake
04/29/02	Added application note warning about reverse bias behavior of these capacitors. Added Surge Current Option "C" to the tables Added Weibull "D" characteristic as Level 1 part selection (where av
03/02/98	Added dimensional drawings to this section.
12/01/97	Made changes indicating the specification conversion to a performance specification (MIL-PRF-55365 instead of MIL-C-55365).
05/01/97	Initial Release of MIL-C-55365 Section in the NPSL

Part Number Ordering Information, example and explanation:

CWR11CB225JBA where,

CWR	11	C	B
Style (Fixed, tantalum, established reliability, chip capacitors conforming to MIL-PRF-55365)	Shape, Encapsulation and Dimensions of the capacitor	Rated Voltage, Derated Voltage and Surge Voltage	Terminati

Part number ordering options are developed using the following criteria:

Style	Detail Specification
CWR06 (Conformally Coated)	MIL-PRF-55365/4
CWR09 (Molded Chip)	MIL-PRF-55365/4
CWR11 (Molded Chip)	MIL-PRF-55365/8

Voltage

Symbol	Rated @ 85deg.C	Derated @ 125deg.C	Surge (+85deg.C)
C	4	2.7	5.0
D	6	4.0	8.0
F	10	7.0	13.0
H	15	10.0	20.0
J	20	13.0	26.0
K	25	17.0	32.0
M	35	23.0	46.0
N	50	33.0	65.0

Termination Finish
B = Gold (50 microinch min.)
C = Hot Solder Dipped (60 microinch min.)
H = Solder Plated (100 microinch min.)
K = Solder Fused (60 microinch min.)

Capacitance Tolerance
J = +/-5 %
K = +/-10 %
M = +/-20 %

Failure Rate Levels
B = 0.1%/1000 hours (Level 2)
C = 0.01%/1000 hours (Level 1)
D = 0.001%/1000 hours (Level 1)

Optional Surge Current Testing

			For Weibull Graded Parts	For Exponential Graded Parts
Option Letter	Test Temperatures	Testing done BEFORE Weibull Grading	Testing done AFTER Weibull Grading	Testing done AFTER Voltage Aging

-- (Blank)	No Surge Current Testing	No Surge Current Testing	No Surge Current Testing	No Surge Current Testing
A	25deg.C +/- 5deg.C	N/A	YES	YES
B	-55deg.C and +85deg.C	N/A	YES	YES
C	-55deg.C and +85deg.C	YES	N/A	N/A

Capacitor Values:

Capacitance values in picofarads (pF) are contained in the following listing. When ordering, the first two digits represent significant figures and the last digit specifies the number of zeroes to follow. For Example 104 indicates 100,000 pF (0.1 uF) and 106 indicates 10,000,000 pF (10 uF).

CWR06 Tantalum Chip Capacitors

(Click Here for Dimensional Drawing)

	Cap.	Rated	Case	Termination	Cap.	Level 1	Level 2	Surge	
Part Number	Value (uF)	Voltage (V)	Size	Finish (@)	Tol. (+/-%)	(FRL) (#)	(FRL) (#)	Current (*) (Optional)	Manufacturer
CWR06C@225%#*	2.2	4	A	B, C, H	J, K, M	C	B	A, B, C, Blank	SPR
CWR06C@475%#*	4.7	4	B	B, C, H	J, K, M	C	B	A, B, C, Blank	SPR
CWR06C@685%#*	6.8	4	C	B, C, H	J, K, M	C	B	A, B, C, Blank	SPR
CWR06C@106%#*	10	4	D	B, C, H	J, K, M	C	B	A, B, C, Blank	SPR
CWR06C@156%#*	15	4	E	B, C, H	J, K, M	C	B	A, B, C, Blank	SPR
CWR06C@336%#*	33	4	F	B, C, H	J, K, M	C	B	A, B, C, Blank	SPR
CWR06C@686%#*	68	4	G	B, C, H	J, K, M	C	B	A, B, C, Blank	SPR
CWR06C@107%#*	100	4	H	B, C, H	J, K, M	C	B	A, B, C, Blank	SPR
CWR06D@155%#*	1.5	6	A	B, C, H	J, K, M	C	B	A, B, C, Blank	SPR
	Cap.	Rated	Case	Termination	Cap.	Level 1	Level 2	Surge	
Part Number	Value (uF)	Voltage (V)	Size	Finish (@)	Tol. (+/-%)	(FRL) (#)	(FRL) (#)	Current (*) (Optional)	Manufacturer
CWR06D@335%#*	3.3	6	B	B, C, H	J, K, M	C	B	A, B, C, Blank	SPR
CWR06D@475%#*	4.7	6	C	B, C, H	J, K, M	C	B	A, B, C, Blank	SPR
CWR06D@685%#*	6.8	6	D	B, C, H	J, K, M	C	B	A, B, C, Blank	SPR
CWR06D@106%#*	10	6	E	B, C, H	J, K, M	C	B	A, B, C, Blank	SPR
CWR06D@226%#*	22	6	F	B, C, H	J, K, M	C	B	A, B, C, Blank	SPR
CWR06D@476%#*	47	6	G	B, C, H	J, K, M	C	B	A, B, C, Blank	SPR
CWR06D@686%#*	68	6	H	B, C, H	J, K, M	C	B	A, B, C, Blank	SPR
CWR06F@105%#*	1.0	10	A	B, C, H	J, K, M	C	B	A, B, C, Blank	SPR
CWR06F@225%#*	2.2	10	B	B, C, H	J, K, M	C	B	A, B, C, Blank	SPR
	Cap.	Rated	Case	Termination	Cap.	Level 1	Level 2	Surge	
Part Number	Value (uF)	Voltage (V)	Size	Finish (@)	Tol. (+/-%)	(FRL) (#)	(FRL) (#)	Current (*) (Optional)	Manufacturer
CWR06F@335%#*	3.3	10	C	B, C, H	J, K, M	C	B	A, B, C, Blank	SPR
CWR06F@475%#*	4.7	10	D	B, C, H	J, K, M	C	B	A, B, C, Blank	SPR
CWR06F@685%#*	6.8	10	E	B, C, H	J, K, M	C	B	A, B, C, Blank	SPR
CWR06F@156%#*	15	10	F	B, C, H	J, K, M	C	B	A, B, C, Blank	SPR
CWR06F@336%#*	33	10	G	B, C, H	J, K, M	C	B	A, B, C, Blank	SPR
CWR06F@476%#*	47	10	H	B, C, H	J, K, M	C	B	A, B, C, Blank	SPR
CWR06H@684%#*	0.68	15	A	B, C, H	J, K, M	C	B	A, B, C, Blank	SPR
CWR06H@155%#*	1.5	15	B	B, C, H	J, K, M	C	B	A, B, C, Blank	SPR
CWR06H@225%#*	2.2	15	C	B, C, H	J, K, M	C	B	A, B, C, Blank	SPR
	Cap.	Rated	Case	Termination	Cap.	Level 1	Level 2	Surge	

Part Number	Value (uF)	Voltage (V)	Size	Finish (@)	Tol. (+/-%)	(FRL) (#)	(FRL) (#)	Current (*) (Optional)	Manufacturer
CWR06H@335%#*	3.3	15	D	B, C, H	J, K, M	C	B	A, B, C, Blank	SPR
CWR06H@475%#*	4.7	15	E	B, C, H	J, K, M	C	B	A, B, C, Blank	SPR
CWR06H@106%#*	10	15	F	B, C, H	J, K, M	C	B	A, B, C, Blank	SPR
CWR06H@226%#*	22	15	G	B, C, H	J, K, M	C	B	A, B, C, Blank	SPR
CWR06H@336%#*	33	15	H	B, C, H	J, K, M	C	B	A, B, C, Blank	SPR
CWR06J@474%#*	0.47	20	A	B, C, H	J, K, M	C	B	A, B, C, Blank	SPR
CWR06J@684%#*	0.68	20	B	B, C, H	J, K, M	C	B	A, B, C, Blank	SPR
CWR06J@105%#*	1.0	20	B	B, C, H	J, K, M	C	B	A, B, C, Blank	SPR
CWR06J@155%#*	1.5	20	C	B, C, H	J, K, M	C	B	A, B, C, Blank	SPR
	Cap.	Rated	Case	Termination	Cap.	Level 1	Level 2	Surge	
Part Number	Value (uF)	Voltage (V)	Size	Finish (@)	Tol. (+/-%)	(FRL) (#)	(FRL) (#)	Current (*) (Optional)	Manufacturer
CWR06J@225%#*	2.2	20	D	B, C, H	J, K, M	C	B	A, B, C, Blank	SPR
CWR06J@335%#*	3.3	20	E	B, C, H	J, K, M	C	B	A, B, C, Blank	SPR
CWR06J@685%#*	6.8	20	F	B, C, H	J, K, M	C	B	A, B, C, Blank	SPR
CWR06J@156%#*	15	20	G	B, C, H	J, K, M	C	B	A, B, C, Blank	SPR
CWR06J@226%#*	22	20	H	B, C, H	J, K, M	C	B	A, B, C, Blank	SPR
CWR06K@334%#*	0.33	25	A	B, C, H	J, K, M	C	B	A, B, C, Blank	SPR
CWR06K@684%#*	0.68	25	B	B, C, H	J, K, M	C	B	A, B, C, Blank	SPR
CWR06K@105%#*	1.0	25	C	B, C, H	J, K, M	C	B	A, B, C, Blank	SPR
CWR06K@155%#*	1.5	25	D	B, C, H	J, K, M	C	B	A, B, C, Blank	SPR
	Cap.	Rated	Case	Termination	Cap.	Level 1	Level 2	Surge	
Part Number	Value (uF)	Voltage (V)	Size	Finish (@)	Tol. (+/-%)	(FRL) (#)	(FRL) (#)	Current (*) (Optional)	Manufacturer
CWR06K@225%#*	2.2	25	E	B, C, H	J, K, M	C	B	A, B, C, Blank	SPR
CWR06K@475%#*	4.7	25	F	B, C, H	J, K, M	C	B	A, B, C, Blank	SPR
CWR06K@685%#*	6.8	25	G	B, C, H	J, K, M	C	B	A, B, C, Blank	SPR
CWR06K@106%#*	10	25	G	B, C, H	J, K, M	C	B	A, B, C, Blank	SPR
CWR06K@156%#*	15	25	H	B, C, H	J, K, M	C	B	A, B, C, Blank	SPR
CWR06M@224%#*	0.22	35	A	B, C, H	J, K, M	C	B	A, B, C, Blank	SPR
CWR06M@474%#*	0.47	35	B	B, C, H	J, K, M	C	B	A, B, C, Blank	SPR
CWR06M@684%#*	0.68	35	C	B, C, H	J, K, M	C	B	A, B, C, Blank	SPR
CWR06M@105%#*	1.0	35	D	B, C, H	J, K, M	C	B	A, B, C, Blank	SPR
	Cap.	Rated	Case	Termination	Cap.	Level 1	Level 2	Surge	
Part Number	Value (uF)	Voltage (V)	Size	Finish (@)	Tol. (+/-%)	(FRL) (#)	(FRL) (#)	Current (*) (Optional)	Manufacturer
CWR06M@155%#*	1.5	35	E	B, C, H	J, K, M	C	B	A, B, C, Blank	SPR
CWR06M@335%#*	3.3	35	F	B, C, H	J, K, M	C	B	A, B, C, Blank	SPR
CWR06M@475%#*	4.7	35	G	B, C, H	J, K, M	C	B	A, B, C, Blank	SPR
CWR06M@685%#*	6.8	35	H	B, C, H	J, K, M	C	B	A, B, C, Blank	SPR
CWR06N@104%#*	0.10	50	A	B, C, H	J, K, M	C	B	A, B, C, Blank	SPR
CWR06N@154%#*	0.15	50	A	B, C, H	J, K, M	C	B	A, B, C, Blank	SPR
CWR06N@224%#*	0.22	50	B	B, C, H	J, K, M	C	B	A, B, C, Blank	SPR
CWR06N@334%#*	0.33	50	B	B, C, H	J, K, M	C	B	A, B, C, Blank	SPR
CWR06N@474%#*	0.47	50	C	B, C, H	J, K, M	C	B	A, B, C, Blank	SPR
	Cap.	Rated	Case	Termination	Cap.	Level 1	Level 2	Surge	
Part Number	Value (uF)	Voltage (V)	Size	Finish (@)	Tol. (+/-%)	(FRL) (#)	(FRL) (#)	Current (*) (Optional)	Manufacturer
CWR06N@684%#*	0.68	50	D	B, C, H	J, K, M	C	B	A, B, C, Blank	SPR
CWR06N@105%#*	1.0	50	E	B, C, H	J, K, M	C	B	A, B, C, Blank	SPR

CWR06N@155%#*	1.5	50	F	B, C, H	J, K, M	C	B	A, B, C, Blank	SPR
CWR06N@225%#*	2.2	50	F	B, C, H	J, K, M	C	B	A, B, C, Blank	SPR
CWR06N@335%#*	3.3	50	G	B, C, H	J, K, M	C	B	A, B, C, Blank	SPR
CWR06N@475%#*	4.7	50	H	B, C, H	J, K, M	C	B	A, B, C, Blank	SPR
	Cap.	Rated	Case	Termination	Cap.	Level 1	Level 2	Surge	
Part Number	Value (uF)	Voltage (V)	Size	Finish (@)	Tol. (+/-%)	(FRL) (#)	(FRL) (#)	Current (*) (Optional)	Manufacturer

CWR06 Style

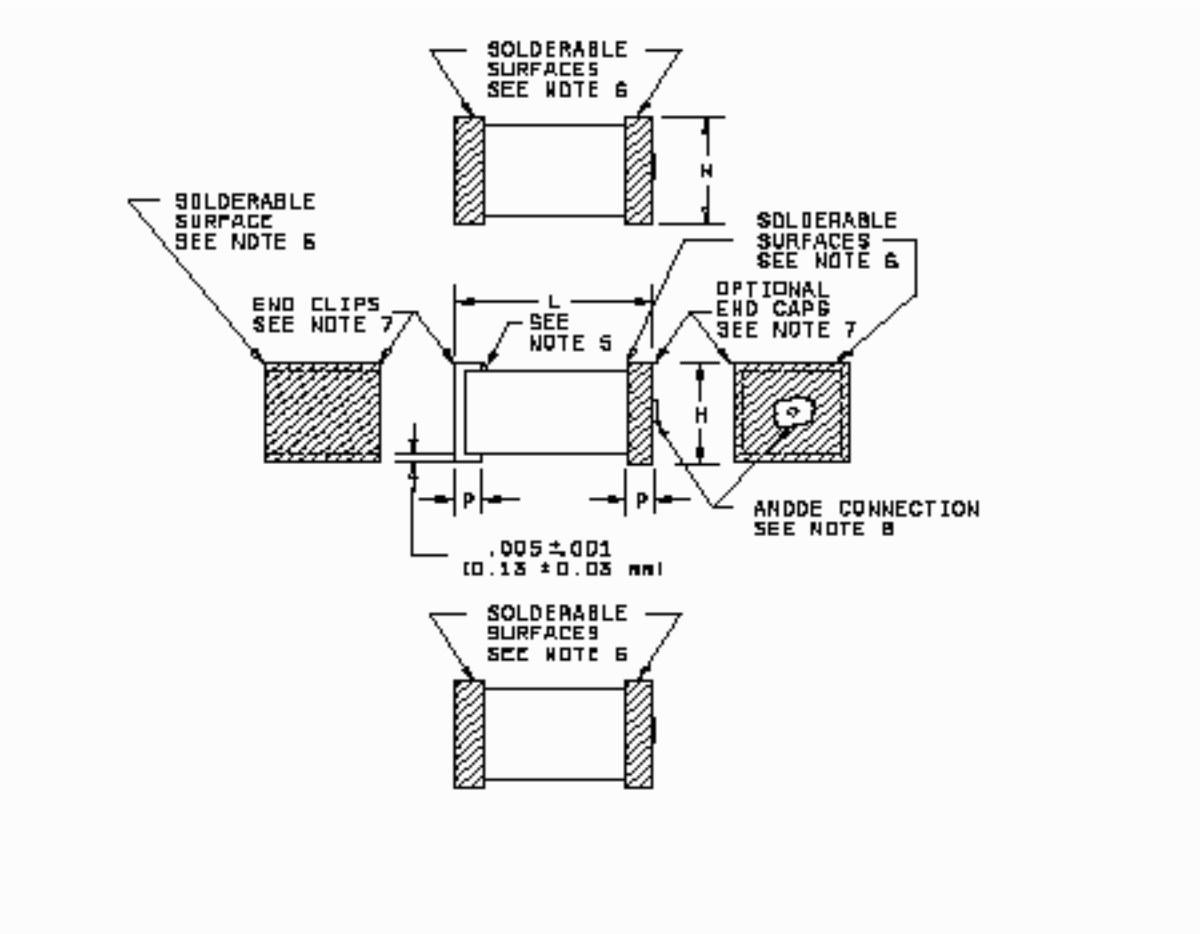

Physical Dimensions Table

Case Size	L	W	H	P
	+/-0.015 (0.38)	+/-0.015 (0.38)	+/-0.015 (0.38)	+/-0.005 (0.13)
A	0.100 (2.54)	0.050 (1.27)	0.050 (1.27)	0.030 (0.76)
B	0.150 (3.81)	0.050 (1.27)	0.050 (1.27)	0.030 (0.76)
C	0.200 (5.08)	0.050 (1.27)	0.050 (1.27)	0.030 (0.76)
D	0.150 (3.81)	0.100 (2.54)	0.050 (1.27)	0.030 (0.76)
E	0.200 (5.08)	0.100 (2.54)	0.050 (1.27)	0.030 (0.76)
F	0.220 (5.59)	0.135 (3.43)	0.070 (1.78)	0.030 (0.76)
G	0.265 (6.73)	0.110 (2.79)	0.110 (2.79)	0.050 (1.27)
H	0.285 (7.24)	0.150 (3.81)	0.110 (2.79)	0.050 (1.27)

NOTES:

1. Dimensions are in inches.
2. Metric equivalents are given for general information only.
3. Metric equivalents are shown in parentheses.
4. These capacitors are designed for mounting by dip soldering, thermo-compression bonding, reflow soldering, or other conventional means.
5. Cathode terminal may be epoxy coated on one surface for polarity identification.
6. Solderable surfaces are only those surfaces designated as such.
7. Anode and cathode terminals may be two-sided through five-sided, and may not be the same on some designs, but will meet all specification requirements.
8. The anode terminal shall be identified by the riser wire connection, which may extend the case size 0.015" (0.38mm) maximum. The riser wire weld area is not solderable. The riser wire connection shall have a continuous weld of a minimum of 25% of the contact surface.
9. When solder coated terminations are required, add 0.15" (0.38mm) to termination dimension tolerances.

CWR09 Tantalum Chip Capacitors

(Click Here for Dimensional Drawing)

	Cap.	Rated	Case	Termination	Cap.	Level 1	Level 2	Surge	
Part Number	Value (uF)	Voltage (V)	Size	Finish (@)	Tol. (+/-%)	(FRL) (#)	(FRL) (#)	Current (*) (Optional)	Manufacturer
CWR09C@225%#*	2.2	4	A	B, C, K	J, K, M	C, D	B	A, B, C, Blank	AVX
CWR09C@475%#*	4.7	4	B	B, C, K	J, K, M	C, D	B	A, B, C, Blank	AVX
CWR09C@685%#*	6.8	4	C	B, C, K	J, K, M	C, D	B	A, B, C, Blank	AVX
CWR09C@106%#*	10	4	D	B, C, K	J, K, M	C, D	B	A, B, C, Blank	AVX
CWR09C@156%#*	15	4	E	B, C, K	J, K, M	C, D	B	A, B, C, Blank	AVX
CWR09C@336%#*	33	4	F	B, C, K	J, K, M	C, D	B	A, B, C, Blank	AVX
CWR09C@686%#*	68	4	G	B, C, K	J, K, M	C, D	B	A, B, C, Blank	AVX
CWR09C@107%#*	100	4	H	B, C, K	J, K, M	C, D	B	A, B, C, Blank	AVX
CWR09D@155%#*	1.5	6	A	B, C, K	J, K, M	C, D	B	A, B, C, Blank	AVX
	Cap.	Rated	Case	Termination	Cap.	Level 1	Level 2	Surge	
Part Number	Value (uF)	Voltage (V)	Size	Finish (@)	Tol. (+/-%)	(FRL) (#)	(FRL) (#)	Current (*) (Optional)	Manufacturer
CWR09D@335%#*	3.3	6	B	B, C, K	J, K, M	C, D	B	A, B, C, Blank	AVX
CWR09D@475%#*	4.7	6	C	B, C, K	J, K, M	C, D	B	A, B, C, Blank	AVX
CWR09D@685%#*	6.8	6	D	B, C, K	J, K, M	C, D	B	A, B, C, Blank	AVX
CWR09D@106%#*	10	6	E	B, C, K	J, K, M	C, D	B	A, B, C, Blank	AVX

CWR09D@226%#*	22	6	F	B, C, K	J, K, M	C, D	B	A, B, C, Blank	AVX
CWR09D@476%#*	47	6	G	B, C, K	J, K, M	C, D	B	A, B, C, Blank	AVX
CWR09D@686%#*	68	6	H	B, C, K	J, K, M	C, D	B	A, B, C, Blank	AVX
CWR09F@105%#*	1.0	10	A	B, C, K	J, K, M	C, D	B	A, B, C, Blank	AVX
CWR09F@225%#*	2.2	10	B	B, C, K	J, K, M	C, D	B	A, B, C, Blank	AVX
	Cap.	Rated	Case	Termination	Cap.	Level 1	Level 2	Surge	
Part Number	Value (uF)	Voltage (V)	Size	Finish (@)	Tol. (+/-%)	(FRL) (#)	(FRL) (#)	Current (*) (Optional)	Manufacturer
CWR09F@335%#*	3.3	10	C	B, C, K	J, K, M	C, D	B	A, B, C, Blank	AVX
CWR09F@475%#*	4.7	10	D	B, C, K	J, K, M	C, D	B	A, B, C, Blank	AVX
CWR09F@685%#*	6.8	10	E	B, C, K	J, K, M	C, D	B	A, B, C, Blank	AVX
CWR09F@156%#*	15	10	F	B, C, K	J, K, M	C, D	B	A, B, C, Blank	AVX
CWR09F@336%#*	33	10	G	B, C, K	J, K, M	C, D	B	A, B, C, Blank	AVX
CWR09F@476%#*	47	10	H	B, C, K	J, K, M	C, D	B	A, B, C, Blank	AVX
CWR09H@684%#*	0.68	15	A	B, C, K	J, K, M	C, D	B	A, B, C, Blank	AVX
CWR09H@155%#*	1.5	15	B	B, C, K	J, K, M	C, D	B	A, B, C, Blank	AVX
CWR09H@225%#*	2.2	15	C	B, C, K	J, K, M	C, D	B	A, B, C, Blank	AVX
	Cap.	Rated	Case	Termination	Cap.	Level 1	Level 2	Surge	
Part Number	Value (uF)	Voltage (V)	Size	Finish (@)	Tol. (+/-%)	(FRL) (#)	(FRL) (#)	Current (*) (Optional)	Manufacturer
CWR09H@335%#*	3.3	15	D	B, C, K	J, K, M	C, D	B	A, B, C, Blank	AVX
CWR09H@475%#*	4.7	15	E	B, C, K	J, K, M	C, D	B	A, B, C, Blank	AVX
CWR09H@106%#*	10	15	F	B, C, K	J, K, M	C, D	B	A, B, C, Blank	AVX
CWR09H@226%#*	22	15	G	B, C, K	J, K, M	C, D	B	A, B, C, Blank	AVX
CWR09H@336%#*	33	15	H	B, C, K	J, K, M	C, D	B	A, B, C, Blank	AVX
CWR09J@474%#*	0.47	20	A	B, C, K	J, K, M	C, D	B	A, B, C, Blank	AVX
CWR09J@684%#*	0.68	20	B	B, C, K	J, K, M	C, D	B	A, B, C, Blank	AVX
CWR09J@105%#*	1.0	20	B	B, C, K	J, K, M	C, D	B	A, B, C, Blank	AVX
CWR09J@155%#*	1.5	20	C	B, C, K	J, K, M	C, D	B	A, B, C, Blank	AVX
	Cap.	Rated	Case	Termination	Cap.	Level 1	Level 2	Surge	
Part Number	Value (uF)	Voltage (V)	Size	Finish (@)	Tol. (+/-%)	(FRL) (#)	(FRL) (#)	Current (*) (Optional)	Manufacturer
CWR09J@225%#*	2.2	20	D	B, C, K	J, K, M	C, D	B	A, B, C, Blank	AVX
CWR09J@335%#*	3.3	20	E	B, C, K	J, K, M	C, D	B	A, B, C, Blank	AVX
CWR09J@685%#*	6.8	20	F	B, C, K	J, K, M	C, D	B	A, B, C, Blank	AVX
CWR09J@156%#*	15	20	G	B, C, K	J, K, M	C, D	B	A, B, C, Blank	AVX
CWR09J@226%#*	22	20	H	B, C, K	J, K, M	C, D	B	A, B, C, Blank	AVX
CWR09K@334%#*	0.33	25	A	B, C, K	J, K, M	C, D	B	A, B, C, Blank	AVX
CWR09K@684%#*	0.68	25	B	B, C, K	J, K, M	C, D	B	A, B, C, Blank	AVX
CWR09K@105%#*	1.0	25	C	B, C, K	J, K, M	C, D	B	A, B, C, Blank	AVX
CWR09K@155%#*	1.5	25	D	B, C, K	J, K, M	C, D	B	A, B, C, Blank	AVX
	Cap.	Rated	Case	Termination	Cap.	Level 1	Level 2	Surge	
Part Number	Value (uF)	Voltage (V)	Size	Finish (@)	Tol. (+/-%)	(FRL) (#)	(FRL) (#)	Current (*) (Optional)	Manufacturer
CWR09K@225%#*	2.2	25	E	B, C, K	J, K, M	C, D	B	A, B, C, Blank	AVX
CWR09K@475%#*	4.7	25	F	B, C, K	J, K, M	C, D	B	A, B, C, Blank	AVX
CWR09K@685%#*	6.8	25	G	B, C, K	J, K, M	C, D	B	A, B, C, Blank	AVX
CWR09K@106%#*	10	25	G	B, C, K	J, K, M	C, D	B	A, B, C, Blank	AVX
CWR09K@156%#*	15	25	H	B, C, K	J, K, M	C, D	B	A, B, C, Blank	AVX
CWR09M@224%#*	0.22	35	A	B, C, K	J, K, M	C, D	B	A, B, C, Blank	AVX
CWR09M@474%#*	0.47	35	B	B, C, K	J, K, M	C, D	B	A, B, C, Blank	AVX

CWR09M@684%#*	0.68	35	C	B, C, K	J, K, M	C, D	B	A, B, C, Blank	AVX
CWR09M@105%#*	1.0	35	D	B, C, K	J, K, M	C, D	B	A, B, C, Blank	AVX
	Cap.	Rated	Case	Termination	Cap.	Level 1	Level 2	Surge	
Part Number	Value (uF)	Voltage (V)	Size	Finish (@)	Tol. (+/-%)	(FRL) (#)	(FRL) (#)	Current (*) (Optional)	Manufacturer
CWR09M@155%#*	1.5	35	E	B, C, K	J, K, M	C, D	B	A, B, C, Blank	AVX
CWR09M@335%#*	3.3	35	F	B, C, K	J, K, M	C, D	B	A, B, C, Blank	AVX
CWR09M@475%#*	4.7	35	G	B, C, K	J, K, M	C, D	B	A, B, C, Blank	AVX
CWR09M@685%#*	6.8	35	H	B, C, K	J, K, M	C, D	B	A, B, C, Blank	AVX
CWR09N@104%#*	0.10	50	A	B, C, K	J, K, M	C, D	B	A, B, C, Blank	AVX
CWR09N@154%#*	0.15	50	A	B, C, K	J, K, M	C, D	B	A, B, C, Blank	AVX
CWR09N@224%#*	0.22	50	B	B, C, K	J, K, M	C, D	B	A, B, C, Blank	AVX
CWR09N@334%#*	0.33	50	B	B, C, K	J, K, M	C, D	B	A, B, C, Blank	AVX
CWR09N@474%#*	0.47	50	C	B, C, K	J, K, M	C, D	B	A, B, C, Blank	AVX
	Cap.	Rated	Case	Termination	Cap.	Level 1	Level 2	Surge	
Part Number	Value (uF)	Voltage (V)	Size	Finish (@)	Tol. (+/-%)	(FRL) (#)	(FRL) (#)	Current (*) (Optional)	Manufacturer
CWR09N@684%#*	0.68	50	D	B, C, K	J, K, M	C, D	B	A, B, C, Blank	AVX
CWR09N@105%#*	1.0	50	E	B, C, K	J, K, M	C, D	B	A, B, C, Blank	AVX
CWR09N@155%#*	1.5	50	F	B, C, K	J, K, M	C, D	B	A, B, C, Blank	AVX
CWR09N@225%#*	2.2	50	F	B, C, K	J, K, M	C, D	B	A, B, C, Blank	AVX
CWR09N@335%#*	3.3	50	G	B, C, K	J, K, M	C, D	B	A, B, C, Blank	AVX
CWR09N@475%#*	4.7	50	H	B, C, K	J, K, M	C, D	B	A, B, C, Blank	AVX
	Cap.	Rated	Case	Termination	Cap.	Level 1	Level 2	Surge	
Part Number	Value (uF)	Voltage (V)	Size	Finish (@)	Tol. (+/-%)	(FRL) (#)	(FRL) (#)	Current (*) (Optional)	Manufacturer

CWR09 Style

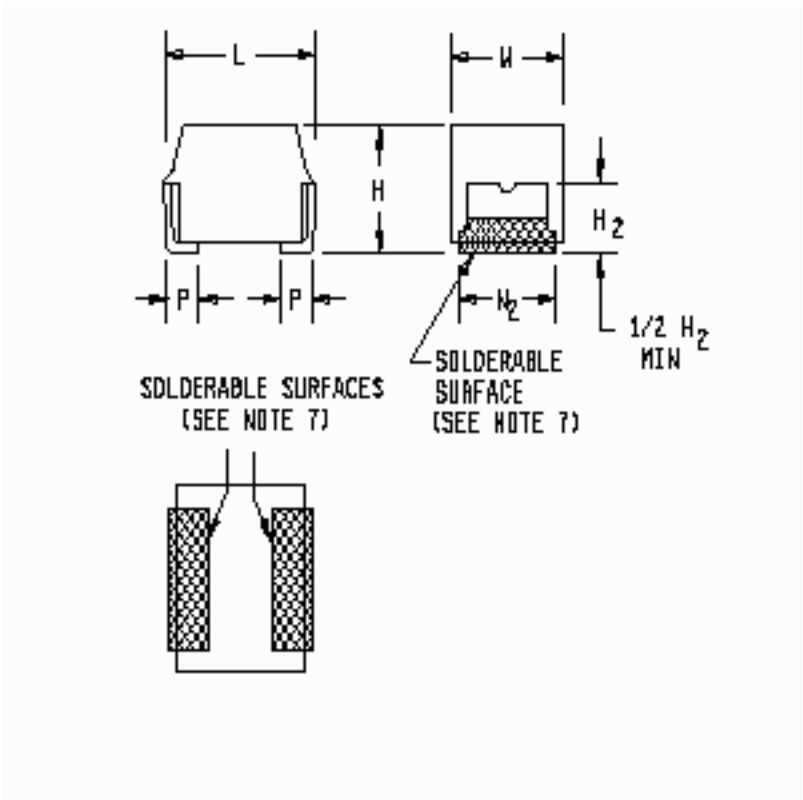

Physical Dimensions Table

Case Size	L	W	H	P	W sub 2	H sub 2
	+/-0.015 (0.38)	+/-0.015 (0.38)	+/-0.015 (0.38)	+/-0.005 (0.13)		minimum
A	0.100 (2.54)	0.050 (1.27)	0.050 (1.27)	0.030 (0.76)	0.050+/-0.005 (1.27+/-0.013)	0.030 (0.76)
B	0.150 (3.81)	0.050 (1.27)	0.050 (1.27)	0.030 (0.76)	0.050+/-0.005 (1.27+/-0.013)	0.030 (0.76)
C	0.200 (5.08)	0.050 (1.27)	0.050 (1.27)	0.030 (0.76)	0.050+/-0.005 (1.27+/-0.013)	0.030 (0.76)
D	0.150 (3.81)	0.100 (2.54)	0.050 (1.27)	0.030 (0.76)	0.095+0.005,-0.010 (2.41+0.13,-0.25)	0.030 (0.76)
E	0.200 (5.08)	0.100 (2.54)	0.050 (1.27)	0.030 (0.76)	0.095+0.005,-0.010 (2.41+0.13,-0.25)	0.030 (0.76)
F	0.220 (5.59)	0.135 (3.43)	0.070 (1.78)	0.030 (0.76)	0.130+/-0.005 (3.30+/-0.13)	0.040 (1.02)
G	0.265 (6.73)	0.110 (2.79)	0.110 (2.79)	0.050 (1.27)	0.105+/-0.005 (2.67+/-0.13)	0.060 (1.52)
H	0.285 (7.24)	0.150 (3.81)	0.110 (2.79)	0.050 (1.27)	0.145+0.005,-0.020 (3.68+0.13,-0.51)	0.060 (1.52)

NOTES:

1. Dimensions are in inches.
2. Metric equivalents are given for general information only.
3. Metric equivalents are shown in parentheses.
4. These capacitors are designed for mounting by dip soldering, thermo-compression bonding, reflow soldering, or other conventional means.
5. The Anode (+) terminal shall be identified by a marking on the case.
6. The termination width (W sub 2) shall be maintained to the top of the solderable area.
7. Solderable surfaces are only those surfaces designated as such. Termination edges are not considered solderable.
9. When solder coated terminations are required, add 0.15" (0.38mm) to termination dimension tolerances.

CWR11 Tantalum Chip Capacitors

(Click Here for Dimensional Drawing)

	Cap.	Rated	Case	Termination	Cap.	Level 1	Level 2	Surge	
Part Number	Value (uF)	Voltage (V)	Size	Finish (@)	Tol. (+/-%)	(FRL) (#)	(FRL) (#)	Current (*) (Optional)	Manufacturer
CWR11C@225%#*	2.2	4	A	B, C, H, K	J, K, M	C, D	B	A, B, C, blank	SPR
CWR11C@475%#*	4.7	4	A	B, C, H, K	J, K, M	C, D	B	A, B, C, blank	SPR
CWR11C@685%#*	6.8	4	B	B, C, H, K	J, K, M	C, D	B	A, B, C, blank	SPR
CWR11C@106%#*	10	4	B	B, C, H, K	J, K, M	C, D	B	A, B, C, blank	SPR
CWR11C@156%#*	15	4	B	B, C, H, K	J, K, M	C, D	B	A, B, C, blank	SPR
CWR11C@336%#*	33	4	C	B, C, H, K	J, K, M	C, D	B	A, B, C, blank	SPR
CWR11C@686%#*	68	4	D	B, C, H, K	J, K, M	C, D	B	A, B, C, blank	SPR
CWR11C@107%#*	100	4	D	B, C, H, K	J, K, M	C, D	B	A, B, C, blank	SPR
CWR11D@155%#*	1.5	6	A	B, C, H, K	J, K, M	C, D	B	A, B, C, blank	AVX, KEM, SPR
	Cap.	Rated	Case	Termination	Cap.	Level 1	Level 2	Surge	
Part Number	Value (uF)	Voltage (V)	Size	Finish (@)	Tol. (+/-%)	(FRL) (#)	(FRL) (#)	Current (*) (Optional)	Manufacturer
CWR11D@225%#*	2.2	6	A	B, C, H, K	J, K, M	C, D	B	A, B, C, blank	AVX, KEM, SPR
CWR11D@335%#*	3.3	6	A	B, C, H, K	J, K, M	C, D	B	A, B, C, blank	AVX, KEM, SPR
CWR11D@475%#*	4.7	6	B	B, C, H, K	J, K, M	C, D	B	A, B, C, blank	AVX, KEM, SPR
CWR11D@685%#*	6.8	6	B	B, C, H, K	J, K, M	C, D	B	A, B, C, blank	AVX, KEM, SPR
CWR11D@106%#*	10	6	B	B, C, H, K	J, K, M	C, D	B	A, B, C, blank	AVX, KEM, SPR
CWR11D@156%#*	15	6	C	B, C, H, K	J, K, M	C, D	B	A, B, C, blank	AVX, KEM, SPR
CWR11D@226%#*	22	6	C	B, C, H, K	J, K, M	C, D	B	A, B, C, blank	AVX, KEM, SPR
CWR11D@476%#*	47	6	D	B, C, H, K	J, K, M	C, D	B	A, B, C, blank	AVX, KEM, SPR
CWR11D@686%#*	68	6	D	B, C, H, K	J, K, M	C, D	B	A, B, C, blank	SPR
	Cap.	Rated	Case	Termination	Cap.	Leve l 1	Level 2	Surge	
Part Number	Value (uF)	Voltage (V)	Size	Finish (@)	Tol. (+/-%)	(FRL) (#)	(FRL) (#)	Current (*) (Optional)	Manufacturer
CWR11F@105%#*	1.0	10	A	B, C, H, K	J, K, M	C, D	B	A, B, C, blank	AVX, KEM, SPR
CWR11F@155%#*	1.5	10	A	B, C, H, K	J, K, M	C, D	B	A, B, C, blank	AVX, KEM, SPR
CWR11F@225%#*	2.2	10	A	B, C, H, K	J, K, M	C, D	B	A, B, C, blank	AVX, KEM, SPR
CWR11F@335%#*	3.3	10	B	B, C, H, K	J, K, M	C, D	B	A, B, C, blank	AVX, KEM, SPR
CWR11F@475%#*	4.7	10	B	B, C, H, K	J, K, M	C, D	B	A, B, C, blank	AVX, KEM, SPR
CWR11F@685%#*	6.8	10	B	B, C, H, K	J, K, M	C, D	B	A, B, C, blank	AVX, KEM, SPR
CWR11F@156%#*	15	10	C	B, C, H, K	J, K, M	C, D	B	A, B, C, blank	AVX, KEM, SPR
CWR11F@336%#*	33	10	D	B, C, H, K	J, K, M	C, D	B	A, B, C, blank	AVX, KEM, SPR

CWR11F@476%#*	47	10	C	B, C, H, K	J, K, M	C, D	B	A, B, C, blank	SPR
	Cap.	Rated	Case	Termination	Cap.	Leve l 1	Level 2	Surge	
Part Number	Value (uF)	Voltage (V)	Size	Finish (@)	Tol. (+/-%)	(FRL) (#)	(FRL) (#)	Current (*) (Optional)	Manufacturer
CWR11H@684%#*	0.68	15	A	B, C, H, K	J, K, M	C, D	B	A, B, C, blank	AVX, KEM, SPR
CWR11H@105%#*	1.0	15	A	B, C, H, K	J, K, M	C, D	B	A, B, C, blank	AVX, KEM, SPR
CWR11H@155%#*	1.5	15	A	B, C, H, K	J, K, M	C, D	B	A, B, C, blank	AVX, KEM, SPR
CWR11H@225%#*	2.2	15	B	B, C, H, K	J, K, M	C, D	B	A, B, C, blank	AVX, KEM, SPR
CWR11H@335%#*	3.3	15	B	B, C, H, K	J, K, M	C, D	B	A, B, C, blank	AVX, KEM, SPR
CWR11H@475%#*	4.7	15	B	B, C, H, K	J, K, M	C, D	B	A, B, C, blank	AVX, KEM, SPR
CWR11H@106%#*	10	15	C	B, C, H, K	J, K, M	C, D	B	A, B, C, blank	AVX, KEM, SPR
CWR11H@226%#*	22	15	D	B, C, H, K	J, K, M	C, D	B	A, B, C, blank	AVX, KEM, SPR
CWR11H@336%#*	33	15	D	B, C, H, K	J, K, M	C, D	B	A, B, C, blank	SPR
	Cap.	Rated	Case	Termination	Cap.	Level 1	Level 2	Surge	
Part Number	Value (uF)	Voltage (V)	Size	Finish (@)	Tol. (+/-%)	(FRL) (#)	(FRL) (#)	Current (*) (Optional)	Manufacturer
CWR11J@474%#*	0.47	20	A	B, C, H, K	J, K, M	C, D	B	A, B, C, blank	AVX, KEM, SPR
CWR11J@684%#*	0.68	20	A	B, C, H, K	J, K, M	C, D	B	A, B, C, blank	AVX, KEM, SPR
CWR11J@105%#*	1.0	20	A	B, C, H, K	J, K, M	C, D	B	A, B, C, blank	AVX, KEM, SPR
CWR11J@155%#*	1.5	20	B	B, C, H, K	J, K, M	C, D	B	A, B, C, blank	AVX, KEM, SPR
CWR11J@225%#*	2.2	20	B	B, C, H, K	J, K, M	C, D	B	A, B, C, blank	AVX, KEM, SPR
CWR11J@335%#*	3.3	20	B	B, C, H, K	J, K, M	C, D	B	A, B, C, blank	AVX, KEM, SPR
CWR11J@155%#*	4.7	20	C	B, C, H, K	J, K, M	C, D	B	A, B, C, blank	AVX, KEM, SPR
CWR11J@685%#*	6.8	20	C	B, C, H, K	J, K, M	C, D	B	A, B, C, blank	AVX, KEM, SPR
CWR11J@156%#*	15	20	D	B, C, H, K	J, K, M	C, D	B	A, B, C, blank	AVX, KEM, SPR
	Cap.	Rated	Case	Termination	Cap.	Level 1	Level 2	Surge	
Part Number	Value (uF)	Voltage (V)	Size	Finish (@)	Tol. (+/-%)	(FRL) (#)	(FRL) (#)	Current (*) (Optional)	Manufacturer
CWR11J@226%#*	22	20	D	B, C, H, K	J, K, M	C, D	B	A, B, C, blank	SPR
CWR11K@334%#*	0.33	25	A	B, C, H, K	J, K, M	C, D	B	A, B, C, blank	AVX, KEM, SPR
CWR11K@474%#*	0.47	25	A	B, C, H, K	J, K, M	C, D	B	A, B, C, blank	AVX, KEM, SPR
CWR11K@684%#*	0.68	25	B	B, C, H, K	J, K, M	C, D	B	A, B, C, blank	AVX, KEM, SPR
CWR11K@105%#*	1.0	25	B	B, C, H, K	J, K, M	C, D	B	A, B, C, blank	AVX, KEM, SPR
CWR11K@155%#*	1.5	25	B	B, C, H, K	J, K, M	C, D	B	A, B, C, blank	AVX, KEM, SPR
CWR11K@225%#*	2.2	25	C	B, C, H, K	J, K, M	C, D	B	A, B, C, blank	AVX, KEM, SPR
CWR11K@335%#*	3.3	25	C	B, C, H, K	J, K, M	C, D	B	A, B, C, blank	AVX, KEM, SPR
CWR11K@475%#*	4.7	25	C	B, C, H, K	J, K, M	C, D	B	A, B, C, blank	AVX, KEM, SPR
	Cap.	Rated	Case	Termination	Cap.	Leve l 1	Level 2	Surge	
Part Number	Value (uF)	Voltage (V)	Size	Finish (@)	Tol. (+/-%)	(FRL) (#)	(FRL) (#)	Current (*) (Optional)	Manufacturer
CWR11K@685%#*	6.8	25	D	B, C, H, K	J, K, M	C, D	B	A, B, C, blank	AVX, KEM, SPR
CWR11K@106%#*	10	25	D	B, C, H, K	J, K, M	C, D	B	A, B, C, blank	AVX, KEM, SPR
CWR11K@156%#*	15	25	D	B, C, H, K	J, K, M	C, D	B	A, B, C, blank	SPR
CWR11M@104%#*	0.1	35	A	B, C, H, K	J, K, M	C, D	B	A, B, C, blank	AVX, KEM, SPR
CWR11M@154%#*	0.15	35	A	B, C, H, K	J, K, M	C, D	B	A, B, C, blank	AVX, KEM, SPR
CWR11M@224%#*	0.22	35	A	B, C, H, K	J, K, M	C, D	B	A, B, C, blank	AVX, KEM, SPR
CWR11M@334%#*	0.33	35	A	B, C, H, K	J, K, M	C, D	B	A, B, C, blank	AVX, KEM, SPR
CWR11M@474%#*	0.47	35	B	B, C, H, K	J, K, M	C, D	B	A, B, C, blank	AVX, KEM, SPR
CWR11M@684%#*	0.68	35	B	B, C, H, K	J, K, M	C, D	B	A, B, C, blank	AVX, KEM, SPR
	Cap.	Rated	Case	Termination	Cap.	Level 1	Level 2	Surge	
Part Number	Value (uF)	Voltage (V)	Size	Finish (@)	Tol. (+/-%)	(FRL) (#)	(FRL) (#)	Current (*) (Optional)	Manufacturer

CWR11M@105%#*	1.0	35	B	B, C, H, K	J, K, M	C, D	B	A, B, C, blank	AVX, KEM, SPR
CWR11M@155%#*	1.5	35	C	B, C, H, K	J, K, M	C, D	B	A, B, C, blank	AVX, KEM, SPR
CWR11M@225%#*	2.2	35	C	B, C, H, K	J, K, M	C, D	B	A, B, C, blank	AVX, KEM, SPR
CWR11M@335%#*	3.3	35	C	B, C, H, K	J, K, M	C, D	B	A, B, C, blank	AVX, KEM, SPR
CWR11M@475%#*	4.7	35	D	B, C, H, K	J, K, M	C, D	B	A, B, C, blank	AVX, KEM, SPR
CWR11M@685%#*	6.8	35	D	B, C, H, K	J, K, M	C, D	B	A, B, C, blank	SPR
CWR11N@104%#*	0.10	50	A	B, C, H, K	J, K, M	C, D	B	A, B, C, blank	AVX, SPR
CWR11N@154%#*	0.15	50	B	B, C, H, K	J, K, M	C, D	B	A, B, C, blank	AVX, SPR
CWR11N@224%#*	0.22	50	B	B, C, H, K	J, K, M	C, D	B	A, B, C, blank	AVX, SPR
	Cap.	Rated	Case	Termination	Cap.	Level 1	Level 2	Surge	
Part Number	Value (uF)	Voltage (V)	Size	Finish (@)	Tol. (+/-%)	(FRL) (#)	(FRL) (#)	Current (*) (Optional)	Manufacturer
CWR11N@334%#*	0.33	50	B	B, C, H, K	J, K, M	C, D	B	A, B, C, blank	AVX
CWR11N@474%#*	0.47	50	C	B, C, H, K	J, K, M	C, D	B	A, B, C, blank	AVX, SPR
CWR11N@684%#*	0.68	50	C	B, C, H, K	J, K, M	C, D	B	A, B, C, blank	AVX, SPR
CWR11N@105%#*	1.0	50	C	B, C, H, K	J, K, M	C, D	B	A, B, C, blank	AVX, SPR
CWR11N@155%#*	1.5	50	D	B, C, H, K	J, K, M	C, D	B	A, B, C, blank	AVX, SPR
CWR11N@225%#*	2.2	50	D	B, C, H, K	J, K, M	C, D	B	A, B, C, blank	AVX, SPR
CWR11N@335%#*	3.3	50	D	B, C, H, K	J, K, M	C, D	B	A, B, C, blank	SPR
CWR11N@475%#*	4.7	50	D	B, C, H, K	J, K, M	C, D	B	A, B, C, blank	SPR
	Cap.	Rated	Case	Termination	Cap.	Leve l 1	Level 2	Surge	
Part Number	Value (uF)	Voltage (V)	Size	Finish (@)	Tol. (+/-%)	(FRL) (#)	(FRL) (#)	Current (*) (Optional)	Manufacturer

CWR11 Style

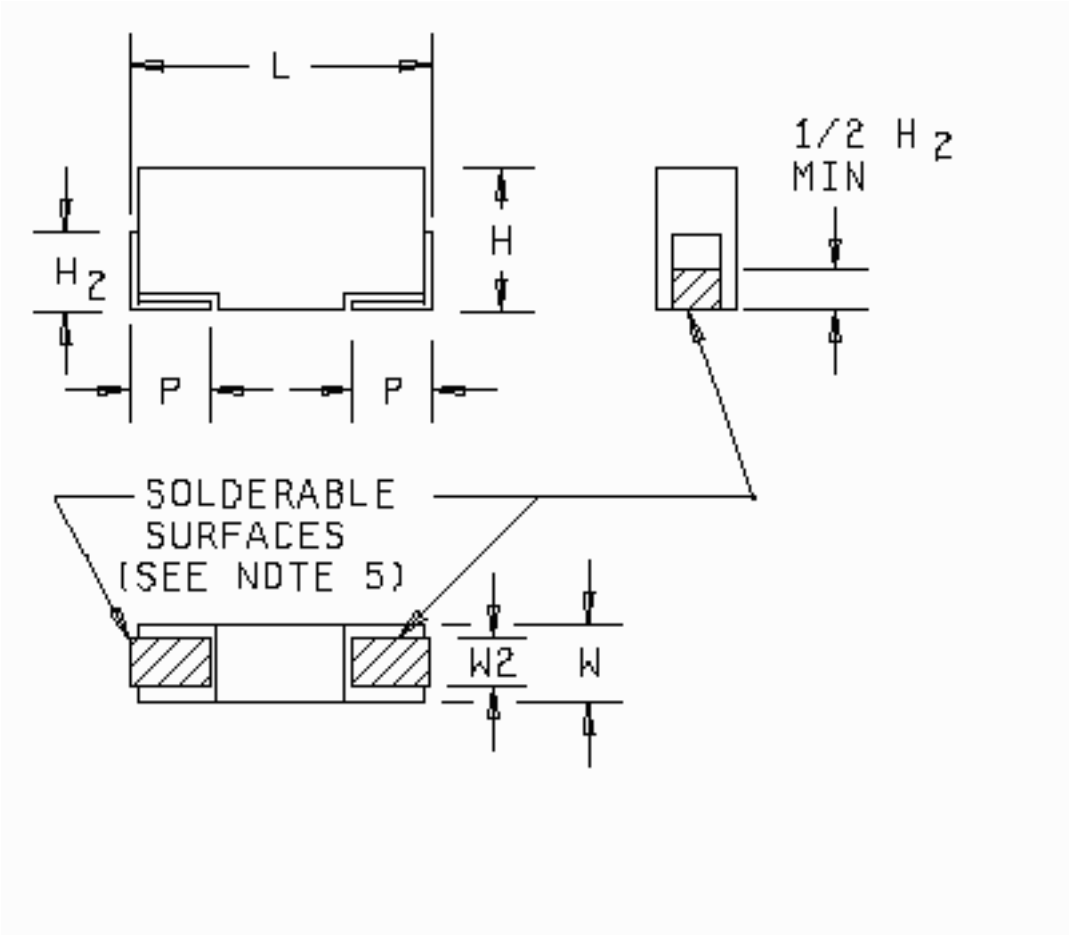

Physical Dimensions Table

Case Size	H	H sub 2	L	P	W	W sub 2
		(min)		+/-0.3 (0.12)		+/-0.1 (0.004) *See Note 6)
A	1.6+/-0.2 (0.063+/-0.008)	0.7 (0.28)	3.2+/-0.2 (0.126+/-0.008)	0.8 (0.031)	1.6+/-0.2 (0.063+/-0.008)	1.2 (0.047)
B	1.9+/-0.2 (0.075+/-0.008)	0.7 (0.28)	3.5+/-0.2 (0.138+/-0.008)	0.8 (0.031)	2.8+/-0.3 (0.110+/-0.012)	2.2 (0.087)
C	2.5+/-0.3 (0.098+/-0.012)	1.0 (0.39)	6.0+/-0.3 (0.236+/-0.012)	1.3 (0.051)	3.2+/-0.2 (0.126+/-0.008)	2.2 (0.087)
D	2.8+/-0.3 (0.110+/-0.012)	1.0 (0.39)	7.3+/-0.3 (0.287+/-0.012)	1.3 (0.051)	4.3+/-0.3 (0.169+/-0.012)	2.4 (0.094)

NOTES:

1. Dimensions are in millimeters.
2. Inch equivalents are in parentheses and are given for general information only.
3. These capacitors are designed for mounting by dip or wave soldering, reflow soldering, thermo-compression bonding, or other conventional means.
4. The Anode (+) terminal shall be identified by a marking on the case or by bevel on the anode end..
5. Solderable surfaces are only those surfaces designated as such. Termination edges are not considered solderable.
6. Applicable to solderable surfaces only. The configuration of the nonsolderable area is optional.
7. For hot solder dipped terminations (termination finish Code C), add 0.38 mm (0.15 inches) to termination dimension tolerances.

Glass Capacitors

The following glass capacitor specifications are available for selection:

Military Specification	Generic Designator	Description
MIL-PRF-23269	CYR	Fixed, Glass

Parts

|

Packaging

|

Radiation

|

Publications

|

Calendar

|

Experts

Admin Login

|

Request Account

|

Feedback

|

Site Map

|

Help

|

Search

NEPP Program Manager:

Chuck Barnes, Jet Propulsion Laboratory

Responsible NASA Official:

Michael Sampson, NEPAG Manager

Website Comments:

Web Development Team

Last Modified:

August 8, 2001

AETD IT Security Banner

NASA Privacy Statement

Glass Capacitor Manufacturer Listing

Listed below are links to manufacturer data sites that may provide additional part related information. The linked sites are not under the control of NPSL and NASA is not responsible for information contained in the linked site. We are providing these links for your convenience only.

AVX

AVX Corporation

3900 Electronics Drive

Raleigh, NC 16299

CAGE Code: 16299

Tel.: (919) 876-1100

Go to -

NEPP

|

NPSL

|

Capacitors

MIL-PRF-23269, CAPACITORS

Fixed, Glass Dielectric, Established Reliability

CYR Styles

Part Number/Ordering Explanation

Important! Application Notes

Revision History for MIL-PRF-23269 Listing in the NPSL

Last Revision: 08/05/99

Click on the link below to see the associated parts selection listing:

Style	Detail Specification	Description (L x W)
CYR10	MIL-PRF-23269/1	Axial lead, (0.344" x 0.172") 0.5 pF to 300 pF (100 V)
CYR15	MIL-PRF-23269/2	Axial lead, (0.469" x 0.266") 220 pF to 1200 pF (100 V)
CYR20	MIL-PRF-23269/3	Axial lead, (0.734" x 0.422") 560 pF to 3300 pF (100 V)
CYR30	MIL-PRF-23269/4	Axial lead, (0.766" x 0.750") 3600 pF to 6200 pF (100 V)

APPLICATION NOTES FOR MIL-PRF-23269

1) Lead material and coating are specified in the detailed specification sheet for each device type.

Revision History for MIL-PRF-23269 Listing in the NPSL

Date	Description of Update
08/05/99	Changed specification name to "MIL-PRF-23269" rather than "MIL-C-23269" to reference the conversion to performance based specifications
01/19/99	Added Dimensional Drawings to this Section
05/01/97	Initial Release of MIL-C-23269 Section in the NPSL

Part Number Ordering Information, example and explanation:

M23269/01-7001 where,

M23269	/01	-7001
Military Specification Number	Detail Specification Number	Four-digit dash number which uniquely identifies the capacitance, tolerance, rated dc voltage and failure rate level

Part number ordering options are developed using the following criteria:

Style	Detail Specification		Available Tolerances
CYR10	MIL-PRF-23269/1		0.25 pF, 0.50 pF, 1%, 2%, 5%
CYR15	MIL-PRF-23269/2		1%, 2%, 5%
CYR20	MIL-PRF-23269/3		1%, 2%, 5%
CYR30	MIL-PRF-23269/4		1%, 2%, 5%

Failure Rate Levels:

S =0.001%/1000 hours (

Level 1 and Level 2

)

CYR10 Glass Capacitors

	Capacitance	Rated	Capacitance Tol.	Level 1 or 2	
Part Number	Value (pF)	Voltage (V)	(+/-) pF or %	[FRL]	Manufacturer
M23269/01-7001	0.5	100	0.25	S	AVX
M23269/01-7002	1.0	100	0.25	S	AVX
M23269/01-7003	1.5	100	0.25	S	AVX
M23269/01-7004	2.2	100	0.25	S	AVX
M23269/01-7005	2.2	100	0.50	S	AVX
M23269/01-7006	2.7	100	0.25	S	AVX
M23269/01-7007	3.0	100	0.25	S	AVX
M23269/01-7008	3.0	100	0.50	S	AVX
M23269/01-7009	3.3	100	0.25	S	AVX
M23269/01-7010	3.6	100	0.25	S	AVX
M23269/01-7011	3.6	100	0.50	S	AVX
M23269/01-7012	3.9	100	0.25	S	AVX
M23269/01-7013	4.3	100	0.25	S	AVX
M23269/01-7014	4.3	100	0.50	S	AVX
M23269/01-7015	4.7	100	0.25	S	AVX
M23269/01-7016	5.1	100	0.25	S	AVX
M23269/01-7017	5.6	100	0.25	S	AVX
M23269/01-7018	5.6	100	5%	S	AVX
	Capacitance	Rated	Capacitance Tol.	Level 1 or 2	
Part Number	Value (pF)	Voltage (V)	(+/-) pF or %	[FRL]	Manufacturer
M23269/01-7019	6.2	100	0.25	S	AVX
M23269/01-7020	6.2	100	5%	S	AVX
M23269/01-7021	6.8	100	0.25	S	AVX
M23269/01-7022	6.8	100	5%	S	AVX
M23269/01-7023	7.5	100	0.25	S	AVX
M23269/01-7024	7.5	100	5%	S	AVX
M23269/01-7025	8.2	100	0.25	S	AVX
M23269/01-7026	8.2	100	5%	S	AVX
M23269/01-7027	9.1	100	0.25	S	AVX

M23269/01-7028	9.1	100	5%	S	AVX
M23269/01-7029	10	100	0.25	S	AVX
M23269/01-7030	10	100	5%	S	AVX
M23269/01-7031	11	100	0.25	S	AVX
M23269/01-7032	11	100	5%	S	AVX
M23269/01-7033	12	100	0.25	S	AVX
M23269/01-7034	12	100	5%	S	AVX
M23269/01-7035	13	100	2%	S	AVX
M23269/01-7036	13	100	5%	S	AVX
	Capacitance	Rated	Capacitance Tol.	Level 1 or 2	
Part Number	Value (pF)	Voltage (V)	(+/-) pF or %	[FRL]	Manufacturer
M23269/01-7037	15	100	2%	S	AVX
M23269/01-7038	15	100	5%	S	AVX
M23269/01-7039	16	100	2%	S	AVX
M23269/01-7040	16	100	5%	S	AVX
M23269/01-7041	18	100	2%	S	AVX
M23269/01-7042	18	100	5%	S	AVX
M23269/01-7043	20	100	2%	S	AVX
M23269/01-7044	20	100	5%	S	AVX
M23269/01-7045	22	100	2%	S	AVX
M23269/01-7046	22	100	5%	S	AVX
M23269/01-7047	24	100	2%	S	AVX
M23269/01-7048	24	100	5%	S	AVX
M23269/01-7049	27	100	1%	S	AVX
M23269/01-7050	27	100	2%	S	AVX
M23269/01-7051	27	100	5%	S	AVX
M23269/01-7052	30	100	1%	S	AVX
M23269/01-7053	30	100	2%	S	AVX
M23269/01-7054	30	100	5%	S	AVX
	Capacitance	Rated	Capacitance Tol.	Level 1 or 2	
Part Number	Value (pF)	Voltage (V)	(+/-) pF or %	[FRL]	Manufacturer
M23269/01-7055	33	100	1%	S	AVX
M23269/01-7056	33	100	2%	S	AVX
M23269/01-7057	33	100	5%	S	AVX
M23269/01-7058	36	100	1%	S	AVX
M23269/01-7059	36	100	2%	S	AVX
M23269/01-7060	36	100	5%	S	AVX
M23269/01-7061	39	100	1%	S	AVX
M23269/01-7062	39	100	2%	S	AVX
M23269/01-7063	39	100	5%	S	AVX
M23269/01-7064	43	100	1%	S	AVX
M23269/01-7065	43	100	2%	S	AVX
M23269/01-7066	43	100	5%	S	AVX
M23269/01-7067	47	100	1%	S	AVX
M23269/01-7068	47	100	2%	S	AVX
M23269/01-7069	47	100	5%	S	AVX
M23269/01-7070	51	100	1%	S	AVX

M23269/01-7071	51	100	2%	S	AVX
M23269/01-7072	51	100	5%	S	AVX
	Capacitance	Rated	Capacitance Tol.	Level 1 or 2	
Part Number	Value (pF)	Voltage (V)	(+/-) pF or %	[FRL]	Manufacturer
M23269/01-7073	56	100	1%	S	AVX
M23269/01-7074	56	100	2%	S	AVX
M23269/01-7075	56	100	5%	S	AVX
M23269/01-7076	62	100	1%	S	AVX
M23269/01-7077	62	100	2%	S	AVX
M23269/01-7078	62	100	5%	S	AVX
M23269/01-7079	68	100	1%	S	AVX
M23269/01-7080	68	100	2%	S	AVX
M23269/01-7081	68	100	5%	S	AVX
M23269/01-7082	75	100	1%	S	AVX
M23269/01-7083	75	100	2%	S	AVX
M23269/01-7084	75	100	5%	S	AVX
M23269/01-7085	82	100	1%	S	AVX
M23269/01-7086	82	100	2%	S	AVX
M23269/01-7087	82	100	5%	S	AVX
M23269/01-7088	91	100	1%	S	AVX
M23269/01-7089	91	100	2%	S	AVX
M23269/01-7090	91	100	5%	S	AVX
	Capacitance	Rated	Capacitance Tol.	Level 1 or 2	
Part Number	Value (pF)	Voltage (V)	(+/-) pF or %	[FRL]	Manufacturer
M23269/01-7091	100	100	1%	S	AVX
M23269/01-7092	100	100	2%	S	AVX
M23269/01-7093	100	100	5%	S	AVX
M23269/01-7094	110	100	1%	S	AVX
M23269/01-7095	110	100	2%	S	AVX
M23269/01-7096	110	100	5%	S	AVX
M23269/01-7097	120	100	1%	S	AVX
M23269/01-7098	120	100	2%	S	AVX
M23269/01-7099	120	100	5%	S	AVX
M23269/01-7100	130	100	1%	S	AVX
M23269/01-7101	130	100	2%	S	AVX
M23269/01-7102	130	100	5%	S	AVX
M23269/01-7103	150	100	1%	S	AVX
M23269/01-7104	150	100	2%	S	AVX
M23269/01-7105	150	100	5%	S	AVX
M23269/01-7106	160	100	1%	S	AVX
M23269/01-7107	160	100	2%	S	AVX
M23269/01-7108	160	100	5%	S	AVX
	Capacitance	Rated	Capacitance Tol.	Level 1 or 2	
Part Number	Value (pF)	Voltage (V)	(+/-) pF or %	[FRL]	Manufacturer
M23269/01-7109	180	100	1%	S	AVX
M23269/01-7110	180	100	2%	S	AVX
M23269/01-7111	180	100	5%	S	AVX

M23269/01-7112	200	100	1%	S	AVX
M23269/01-7113	200	100	2%	S	AVX
M23269/01-7114	200	100	5%	S	AVX
M23269/01-7115	220	100	1%	S	AVX
M23269/01-7116	220	100	2%	S	AVX
M23269/01-7117	220	100	5%	S	AVX
M23269/01-7118	240	100	1%	S	AVX
M23269/01-7119	240	100	2%	S	AVX
M23269/01-7120	240	100	5%	S	AVX
M23269/01-7121	270	100	1%	S	AVX
M23269/01-7122	270	100	2%	S	AVX
M23269/01-7123	270	100	5%	S	AVX
M23269/01-7124	300	100	1%	S	AVX
M23269/01-7125	300	100	2%	S	AVX
M23269/01-7126	300	100	5%	S	AVX
	Capacitance	Rated	Capacitance Tol.	Level 1 or 2	
Part Number	Value (pF)	Voltage (V)	(+/-) pF or %	[FRL]	Manufacturer

Style CYR10

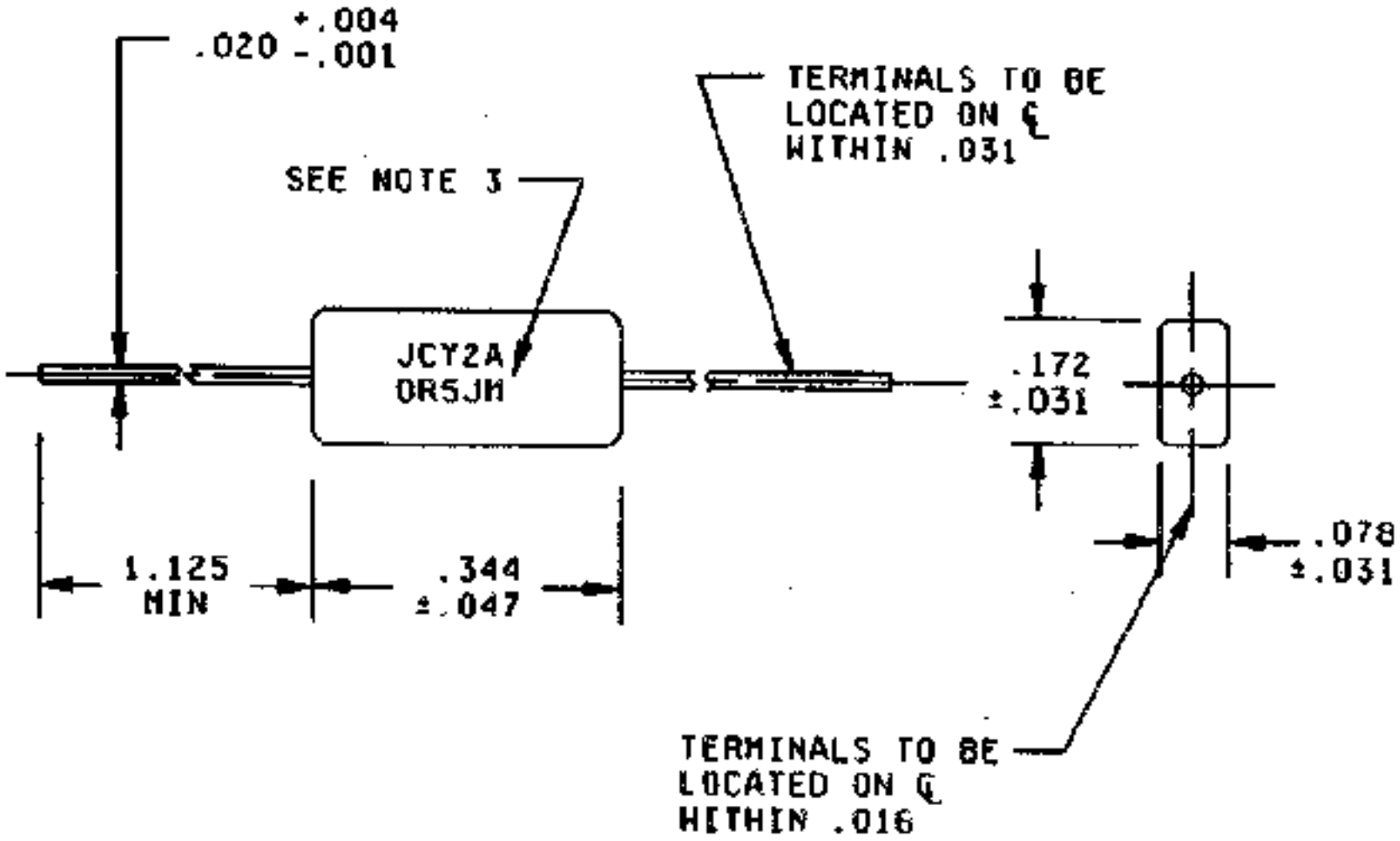

Notes:

1) Dimensions are in inches.

2) Metric equivalents are given for general information only.

3) See marking requirement.

	Capacitance	Rated	Capacitance Tol.	Level 1 or 2	
Part Number	Value (pF)	Voltage (V)	(+/-) pF or %	[FRL]	Manufacturer
M23269/02-7001	220	100	1%	S	AVX
M23269/02-7002	220	100	2%	S	AVX
M23269/02-7003	220	100	5%	S	AVX
M23269/02-7004	240	100	1%	S	AVX
M23269/02-7005	240	100	2%	S	AVX
M23269/02-7006	240	100	5%	S	AVX
M23269/02-7007	270	100	1%	S	AVX
M23269/02-7008	270	100	2%	S	AVX
M23269/02-7009	270	100	5%	S	AVX
M23269/02-7010	300	100	1%	S	AVX
M23269/02-7011	300	100	2%	S	AVX
M23269/02-7012	300	100	5%	S	AVX
M23269/02-7013	330	100	1%	S	AVX
M23269/02-7014	330	100	2%	S	AVX
M23269/02-7015	330	100	5%	S	AVX
M23269/02-7016	360	100	1%	S	AVX
M23269/02-7017	360	100	2%	S	AVX
M23269/02-7018	360	100	5%	S	AVX
	Capacitance	Rated	Capacitance Tol.	Level 1 or 2	
Part Number	Value (pF)	Voltage (V)	(+/-) pF or %	[FRL]	Manufacturer
M23269/02-7019	390	100	1%	S	AVX
M23269/02-7020	390	100	2%	S	AVX
M23269/02-7021	390	100	5%	S	AVX
M23269/02-7022	430	100	1%	S	AVX
M23269/02-7023	430	100	2%	S	AVX
M23269/02-7024	430	100	5%	S	AVX
M23269/02-7025	470	100	1%	S	AVX
M23269/02-7026	470	100	2%	S	AVX
M23269/02-7027	470	100	5%	S	AVX
M23269/02-7028	510	100	1%	S	AVX
M23269/02-7029	510	100	2%	S	AVX
M23269/02-7030	510	100	5%	S	AVX
M23269/02-7031	560	100	1%	S	AVX
M23269/02-7032	560	100	2%	S	AVX
M23269/02-7033	560	100	5%	S	AVX
M23269/02-7034	620	100	1%	S	AVX
M23269/02-7035	620	100	2%	S	AVX
M23269/02-7036	620	100	5%	S	AVX
	Capacitance	Rated	Capacitance Tol.	Level 1 or 2	
Part Number	Value (pF)	Voltage (V)	(+/-) pF or %	[FRL]	Manufacturer
M23269/02-7037	680	100	1%	S	AVX
M23269/02-7038	680	100	2%	S	AVX
M23269/02-7039	680	100	5%	S	AVX

M23269/02-7040	750	100	1%	S	AVX
M23269/02-7041	750	100	2%	S	AVX
M23269/02-7042	750	100	5%	S	AVX
M23269/02-7043	820	100	1%	S	AVX
M23269/02-7044	820	100	2%	S	AVX
M23269/02-7045	820	100	5%	S	AVX
M23269/02-7046	910	100	1%	S	AVX
M23269/02-7047	910	100	2%	S	AVX
M23269/02-7048	910	100	5%	S	AVX
M23269/02-7049	1000	100	1%	S	AVX
M23269/02-7050	1000	100	2%	S	AVX
M23269/02-7051	1000	100	5%	S	AVX
M23269/02-7052	1100	100	1%	S	AVX
M23269/02-7053	1100	100	2%	S	AVX
M23269/02-7054	1100	100	5%	S	AVX
	Capacitance	Rated	Capacitance Tol.	Level 1 or 2	
Part Number	Value (pF)	Voltage (V)	(+/-) pF or %	[FRL]	Manufacturer
M23269/02-7055	1200	100	1%	S	AVX
M23269/02-7056	1200	100	2%	S	AVX
M23269/02-7057	1200	100	5%	S	AVX

Style CYR15

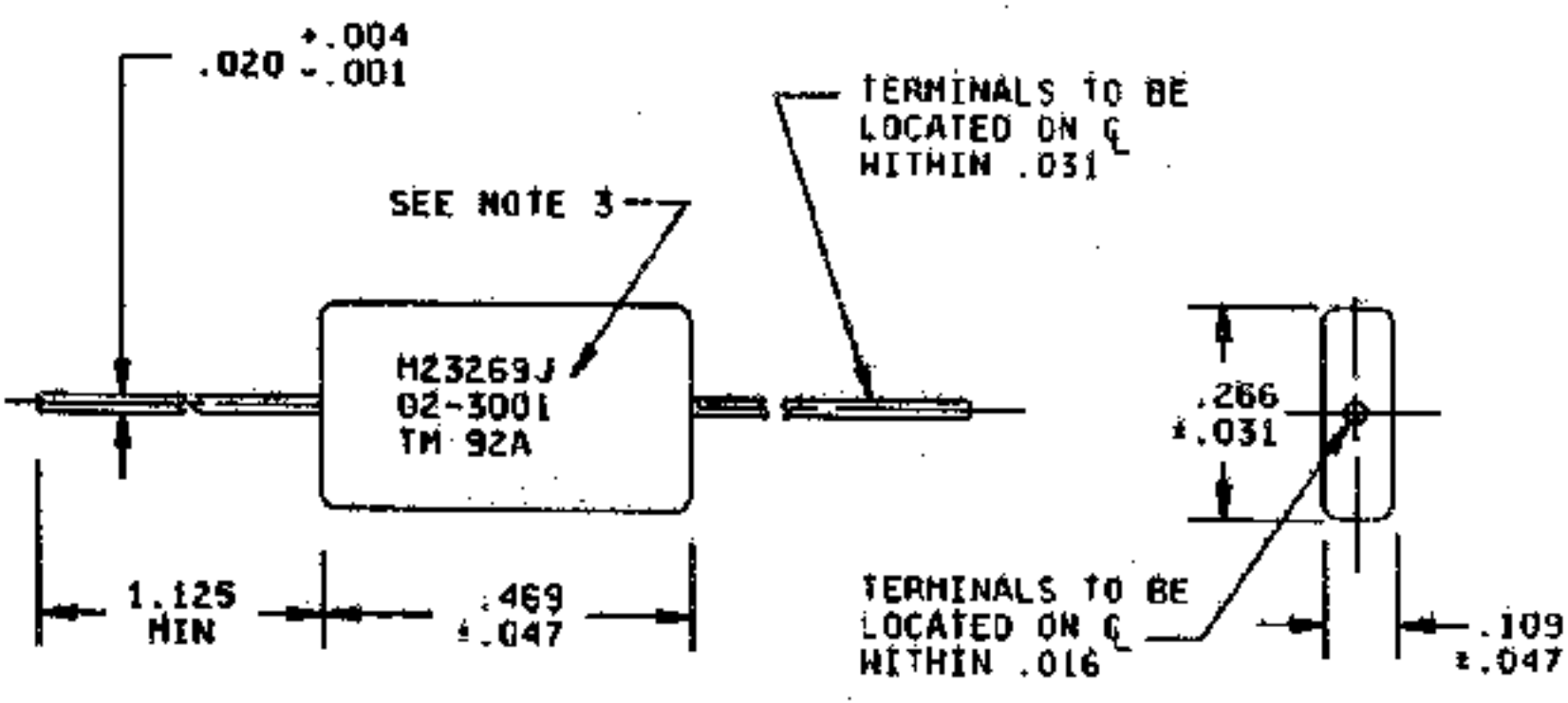

Notes:

1) Dimensions are in inches.

2) Metric equivalents are given for general information only.

3) See marking requirements.

CYR20 Glass Capacitors

	Capacitance	Rated	Capacitance Tol.	Level 1 or 2	
Part Number	Value (pF)	Voltage (V)	(+/-) pF or %	[FRL]	Manufacturer
M23269/03-7001	560	100	1%	S	AVX
M23269/03-7002	560	100	2%	S	AVX
M23269/03-7003	560	100	5%	S	AVX
M23269/03-7004	620	100	1%	S	AVX
M23269/03-7005	620	100	2%	S	AVX

M23269/03-7006	620	100	5%	S	AVX
M23269/03-7007	680	100	1%	S	AVX
M23269/03-7008	680	100	2%	S	AVX
M23269/03-7009	680	100	5%	S	AVX
M23269/03-7010	750	100	1%	S	AVX
M23269/03-7011	750	100	2%	S	AVX
M23269/03-7012	750	100	5%	S	AVX
M23269/03-7013	820	100	1%	S	AVX
M23269/03-7014	820	100	2%	S	AVX
M23269/03-7015	820	100	5%	S	AVX
M23269/03-7016	910	100	1%	S	AVX
M23269/03-7017	910	100	2%	S	AVX
M23269/03-7018	910	100	5%	S	AVX
	Capacitance	Rated	Capacitance Tol.	Level 1 or 2	
Part Number	Value (pF)	Voltage (V)	(+/-) pF or %	[FRL]	Manufacturer
M23269/03-7019	1000	100	1%	S	AVX
M23269/03-7020	1000	100	2%	S	AVX
M23269/03-7021	1000	100	5%	S	AVX
M23269/03-7022	1100	100	1%	S	AVX
M23269/03-7023	1100	100	2%	S	AVX
M23269/03-7024	1100	100	5%	S	AVX
M23269/03-7025	1200	100	1%	S	AVX
M23269/03-7026	1200	100	2%	S	AVX
M23269/03-7027	1200	100	5%	S	AVX
M23269/03-7028	1300	100	1%	S	AVX
M23269/03-7029	1300	100	2%	S	AVX
M23269/03-7030	1300	100	5%	S	AVX
M23269/03-7031	1500	100	1%	S	AVX
M23269/03-7032	1500	100	2%	S	AVX
M23269/03-7033	1500	100	5%	S	AVX
M23269/03-7034	1600	100	1%	S	AVX
M23269/03-7035	1600	100	2%	S	AVX
M23269/03-7036	1600	100	5%	S	AVX
	Capacitance	Rated	Capacitance Tol.	Level 1 or 2	
Part Number	Value (pF)	Voltage (V)	(+/-) pF or %	[FRL]	Manufacturer
M23269/03-7037	1800	100	1%	S	AVX
M23269/03-7038	1800	100	2%	S	AVX
M23269/03-7039	1800	100	5%	S	AVX
M23269/03-7040	2000	100	1%	S	AVX
M23269/03-7041	2000	100	2%	S	AVX
M23269/03-7042	2000	100	5%	S	AVX
M23269/03-7043	2200	100	1%	S	AVX
M23269/03-7044	2200	100	2%	S	AVX
M23269/03-7045	2200	100	5%	S	AVX
M23269/03-7046	2400	100	1%	S	AVX
M23269/03-7047	2400	100	2%	S	AVX
M23269/03-7048	2400	100	5%	S	AVX

M23269/03-7049	2700	100	1%	S	AVX
M23269/03-7050	2700	100	2%	S	AVX
M23269/03-7051	2700	100	5%	S	AVX
M23269/03-7052	3000	100	1%	S	AVX
M23269/03-7053	3000	100	2%	S	AVX
M23269/03-7054	3000	100	5%	S	AVX
	Capacitance	Rated	Capacitance Tol.	Level 1 or 2	
Part Number	Value (pF)	Voltage (V)	(+/-) pF or %	[FRL]	Manufacturer
M23269/03-7055	3300	100	1%	S	AVX
M23269/03-7056	3300	100	2%	S	AVX
M23269/03-7057	3300	100	5%	S	AVX

Style CYR20

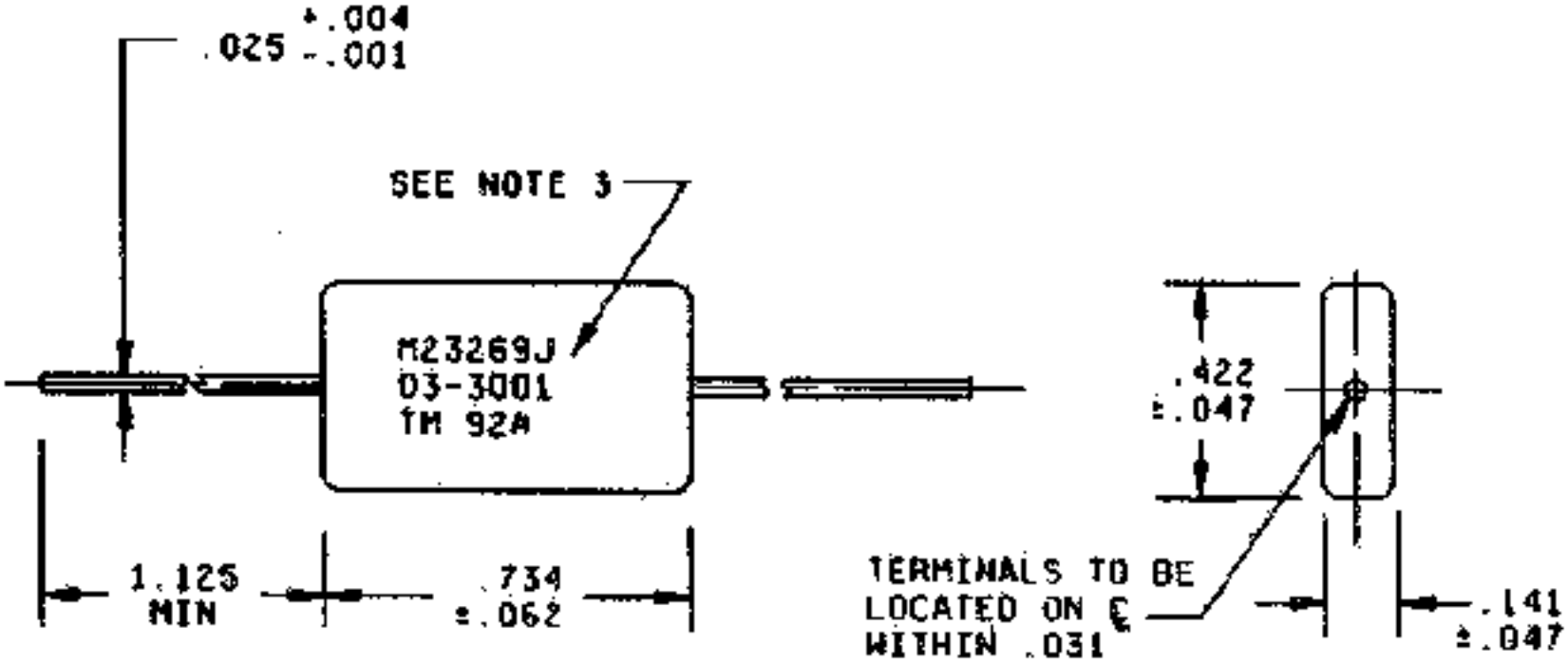

Notes:

1) Dimensions are in inches.

2) Metric equivalents are given for general information only.

3) See marking requirement.

CYR30 Glass Capacitors

	Capacitance	Rated	Capacitance Tol.	Level 1 or 2	
Part Number	Value (pF)	Voltage (V)	(+/-) pF or %	[FRL]	Manufacturer
M23269/04-7001	3600	100	1%	S	AVX
M23269/04-7002	3600	100	2%	S	AVX
M23269/04-7003	3600	100	5%	S	AVX
M23269/04-7004	3900	100	1%	S	AVX
M23269/04-7005	3900	100	2%	S	AVX
M23269/04-7006	3900	100	5%	S	AVX
M23269/04-7007	4300	100	1%	S	AVX
M23269/04-7008	4300	100	2%	S	AVX
M23269/04-7009	4300	100	5%	S	AVX
M23269/04-7010	4700	100	1%	S	AVX
M23269/04-7011	4700	100	2%	S	AVX
M23269/04-7012	4700	100	5%	S	AVX
M23269/04-7013	5100	100	1%	S	AVX
M23269/04-7014	5100	100	2%	S	AVX
M23269/04-7015	5100	100	5%	S	AVX
M23269/04-7016	5600	100	1%	S	AVX
M23269/04-7017	5600	100	2%	S	AVX
M23269/04-7018	5600	100	5%	S	AVX
	Capacitance	Rated	Capacitance Tol.	Level 1 or 2	
Part Number	Value (pF)	Voltage (V)	(+/-) pF or %	[FRL]	Manufacturer
M23269/04-7019	6200	100	1%	S	AVX
M23269/04-7020	6200	100	2%	S	AVX
M23269/04-7021	6200	100	5%	S	AVX

Style CYR30

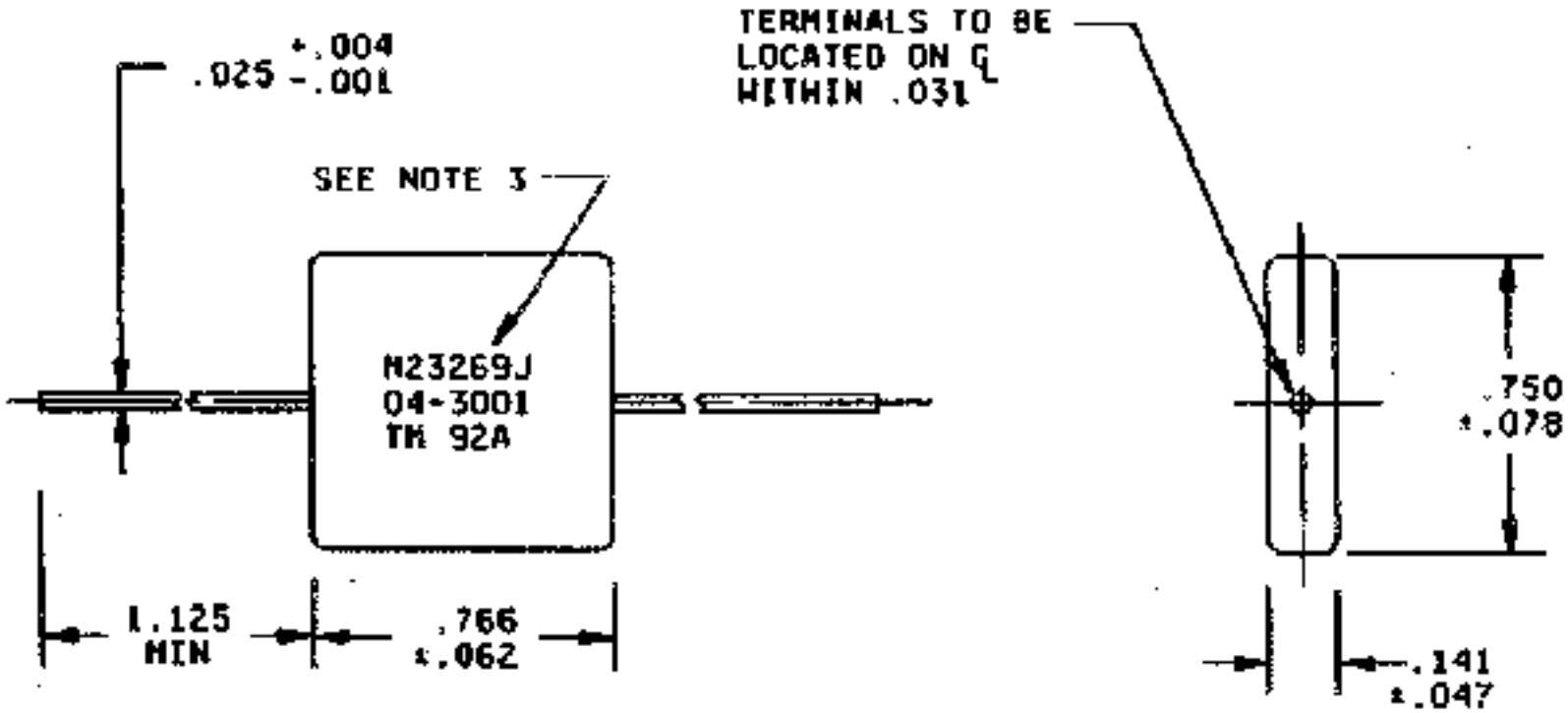

Notes:

1) Dimensions are in inches.

2) Metric equivalents are given for general information only.

3) See marking requirement.

Plastic Film Capacitors

The following plastic film capacitor specifications are available for selection:

Military Specification	Generic Designator	Description
MIL-PRF-83421	CRH	Fixed, Metallized Plastic Film
MIL-PRF-87217	CHS	Fixed, Supermetallized Plastic Film

|

Request Account

|

Feedback

|

Site Map

|

Help

|

Search

NEPP Program Manager:

Chuck Barnes, Jet Propulsion Laboratory

Responsible NASA Official:

Michael Sampson, NEPAG Manager

Website Comments:

Web Development Team

Last Modified:

August 8, 2001

AETD IT Security Banner

NASA Privacy Statement

Plastic Film Capacitor Manufacturer Listing

Listed below are links to manufacturer data sites that may provide additional part related information. The linked sites are not under the control of NPSL and NASA is not responsible for information contained in the linked site. We are providing these links for your convenience only.

CRC

Component Research Corporation

1655 26th Street

Santa Monica, CA 90404

CAGE Code: 12517

Tel.: (310) 829-3615

DEI

Dearborn Electronics, Inc.

1221 N. Highways 17 92

Longwood, FL 32750

CAGE Code: 01884

Tel.: (305) 695-6562

Go to -

NEPP

|

NPSL

|

Capacitors

MIL-PRF-83421, CAPACITORS

Fixed, Metallized, Plastic Film Dielectric, Hermetically Sealed, Established Reliability

CRH Styles

Part Number/Ordering Explanation

Important! Application Notes

Revision History for MIL-PRF-83421 Listing in the NPSL

Last Revision: 12/01/97

Click on the link below to see the associated parts selection listing:

Style	Detail Specification	Description
CRH01	MIL-PRF-83421/1	Axial lead, hermetically sealed 0.001 uF to 22 uF (30 V)
CRH02	MIL-PRF-83421/1	Axial lead, hermetically sealed 0.001 uF to 10 uF (50 V)
CRH03	MIL-PRF-83421/1	Axial lead, hermetically sealed 0.001 uF to 10 uF (100 V)
CRH04	MIL-PRF-83421/1	Axial lead, hermetically sealed 0.001 uF to 3.9 uF (200 V)
CRH05	MIL-PRF-83421/1	Axial lead, hermetically sealed 0.001 uF to 2.0 uF (400 V)

APPLICATION NOTES FOR MIL-PRF-83421

1) These capacitors are not recommended for use in circuits where the energy is less than 250 microjoules. This recommendation is based on the "self healing" properties of plastic film capacitors and the need for sufficient energy to be available to promote self healing. Without adequate energy available, self healing will not occur and parts may catastrophically fail short circuit.

2) Parts covered by this specification contain internal soldered connections which may reflow during installation.. The plastic dielectric in these parts is also temperature sensitive. Special precautions such as heat sinking are recommended when soldering onto boards.

3) Lead material and coating are specified in MIL-PRF-83421/1.

Revision History for MIL-PRF-83421 Listing in the NPSL

12/01/97	Made changes indicating the specification conversion to a performance specification (MIL-PRF-83421 instead of MIL-C-83421).
05/01/97	Initial Release of MIL-C-83421 Section in the NPSL

Part Number Ordering Information, example and explanation:

M83421/01-1003S where,

M83421	/01	-1	003
Military Specification Number	Detail Specification Number	Single digit which identifies the capacitor style and rated voltage	Three-digit dash number which uniquely identifies the capacitance, tolerance, a

Part number ordering options are developed using the following criteria:

Style	Rated Voltage		Failure Rate Levels:
CRH01	30 Vdc		R = 0.01%/1000 hours (Level 2)
CRH02	50 Vdc		S = 0.001%/1000 hours (Level 1)

CRH03	100 Vdc		
CRH04	200 Vdc		
CRH05	400 Vdc		

CRH01 Plastic Film Capacitors

		Part Number (M83421/01-XXXX#)					
		Capacitance Tolerance	Capacitance	Rated	Level 1	Level 2	Manufacturer
1.0 %	5.0 %	10.0 %	Value (uF)	Voltage (V)	(FRL)(#)	(FRL)(#)	
-1003#	-1005#	-1006#	0.001	30	S	R	CRC, DEI
-1009#	-1011#	-1012#	0.0012	30	S	R	CRC, DEI
-1015#	-1017#	-1018#	0.0015	30	S	R	CRC, DEI
-1021#	-1023#	-1024#	0.0018	30	S	R	CRC, DEI
-1027#	-1029#	-1030#	0.002	30	S	R	CRC, DEI
-1033#	-1035#	-1036#	0.0022	30	S	R	CRC, DEI
-1039#	-1041#	-1042#	0.0027	30	S	R	CRC, DEI
-1045#	-1047#	-1048#	0.0033	30	S	R	CRC, DEI
-1051#	-1053#	-1054#	0.0039	30	S	R	CRC, DEI
-1057#	-1059#	-1060#	0.0047	30	S	R	CRC, DEI
-1063#	-1065#	-1066#	0.005	30	S	R	CRC, DEI
-1069#	-1071#	-1072#	0.0056	30	S	R	CRC, DEI
-1075#	-1077#	-1078#	0.0068	30	S	R	CRC, DEI
-1081#	-1083#	-1084#	0.0082	30	S	R	CRC, DEI
-1087#	-1089#	-1090#	0.01	30	S	R	CRC, DEI
-1093#	-1095#	-1096#	0.012	30	S	R	CRC, DEI
-1099#	-1101#	-1102#	0.015	30	S	R	CRC, DEI
-1105#	-1107#	-1108#	0.018	30	S	R	CRC, DEI
		Part Number (M83421/01-XXXX#)					
		Capacitance Tolerance	Capacitance	Rated	Level 1	Level 2	Manufacturer
1.0 %	5.0 %	10.0 %	Value (uF)	Voltage (V)	(FRL)(#)	(FRL)(#)	
-1111#	-1113#	-1114#	0.02	30	S	R	CRC, DEI
-1117#	-1119#	-1120#	0.022	30	S	R	CRC, DEI
-1123#	-1125#	-1126#	0.027	30	S	R	CRC, DEI
-1129#	-1131#	-1132#	0.033	30	S	R	CRC, DEI
-1135#	-1137#	-1138#	0.039	30	S	R	CRC, DEI
-1141#	-1143#	-1144#	0.047	30	S	R	CRC, DEI
-1147#	-1149#	-1150#	0.050	30	S	R	CRC, DEI
-1153#	-1155#	-1156#	0.056	30	S	R	CRC, DEI
-1159#	-1161#	-1162#	0.068	30	S	R	CRC, DEI
-1165#	-1167#	-1168#	0.082	30	S	R	CRC, DEI
-1171#	-1173#	-1174#	0.10	30	S	R	CRC, DEI
-1177#	-1179#	-1180#	0.12	30	S	R	CRC, DEI
-1183#	-1185#	-1186#	0.15	30	S	R	CRC, DEI
-1375#	-1377#	-1378#	0.18	30	S	R	CRC, DEI
-1189#	-1191#	-1192#	0.20	30	S	R	CRC, DEI

-1195#	-1197#	-1198#	0.22	30	S	R	CRC, DEI
-1201#	-1203#	-1204#	0.27	30	S	R	CRC, DEI
-1207#	-1209#	-1210#	0.33	30	S	R	CRC, DEI
		Part Number (M83421/01-XXXX#)					
		Capacitance Tolerance	Capacitance	Rated	Level 1	Level 2	Manufacturer
1.0 %	5.0 %	10.0 %	Value (uF)	Voltage (V)	(FRL)(#)	(FRL)(#)	
-1213#	-1215#	-1216#	0.39	30	S	R	CRC, DEI
-1219#	-1221#	-1222#	0.47	30	S	R	CRC, DEI
-1225#	-1227#	-1228#	0.50	30	S	R	CRC, DEI
-1231#	-1233#	-1234#	0.56	30	S	R	CRC, DEI
-1237#	-1239#	-1240#	0.68	30	S	R	CRC, DEI
-1243#	-1245#	-1246#	0.82	30	S	R	CRC, DEI
-1249#	-1251#	-1252#	1.0	30	S	R	CRC, DEI
-1255#	-1257#	-1258#	1.2	30	S	R	CRC, DEI
-1261#	-1263#	-1264#	1.5	30	S	R	CRC, DEI
-1267#	-1269#	-1270#	1.8	30	S	R	CRC, DEI
-1273#	-1275#	-1276#	2.0	30	S	R	CRC, DEI
-1279#	-1281#	-1282#	2.2	30	S	R	CRC, DEI
-1387#	-1389#	-1390#	2.7	30	S	R	CRC, DEI
-1291#	-1293#	-1294#	3.0	30	S	R	CRC, DEI
-1297#	-1299#	-1300#	3.3	30	S	R	CRC, DEI
-1303#	-1305#	-1306#	3.9	30	S	R	CRC, DEI
-1315#	-1317#	-1318#	4.7	30	S	R	CRC, DEI
-1321#	-1323#	-1324#	5.0	30	S	R	CRC, DEI
		Part Number (M83421/01-XXXX#)					
		Capacitance Tolerance	Capacitance	Rated	Level 1	Level 2	Manufacturer
1.0 %	5.0 %	10.0 %	Value (uF)	Voltage (V)	(FRL)(#)	(FRL)(#)	
-1327#	-1329#	-1330#	5.6	30	S	R	CRC, DEI
-1333#	-1335#	-1336#	6.8	30	S	R	CRC, DEI
-1339#	-1341#	-1342#	8.0	30	S	R	CRC, DEI
-1345#	-1347#	-1348#	8.2	30	S	R	CRC, DEI
-1351#	-1353#	-1354#	10.0	30	S	R	CRC, DEI
-1381#	-1383#	-1384#	12.0	30	S	R	CRC, DEI
-1357#	-1359#	-1360#	15.0	30	S	R	CRC, DEI
-1363#	-1365#	-1366#	20.0	30	S	R	CRC, DEI
-1369#	-1371#	-1372#	22.0	30	S	R	CRC, DEI
		Part Number (M83421/01-XXXX#)					
		Capacitance Tolerance	Capacitance	Rated	Level 1	Level 2	Manufacturer
1.0 %	5.0 %	10.0 %	Value (uF)	Voltage (V)	(FRL)(#)	(FRL)(#)	

CRH02 Plastic Film Capacitors

		Part Number (M83421/01-XXXX#)					
		Capacitance Tolerance	Capacitance	Rated	Level 1	Level 2	Manufacturer
+/- 1.0 %	+/- 5.0 %	+/- 10.0 %	Value (uF)	Voltage (V)	(FRL)(#)	(FRL)(#)	

-2003#	-2005#	-2006#	0.001	50	S	R	CRC, DEI
-2009#	-2011#	-2012#	0.0012	50	S	R	CRC, DEI
-2015#	-2017#	-2018#	0.0015	50	S	R	CRC, DEI
-2021#	-2023#	-2024#	0.0018	50	S	R	CRC, DEI
-2027#	-2029#	-2030#	0.002	50	S	R	CRC, DEI
-2033#	-2035#	-2036#	0.0022	50	S	R	CRC, DEI
-2039#	-2041#	-2042#	0.0027	50	S	R	CRC, DEI
-2045#	-2047#	-2048#	0.0033	50	S	R	CRC, DEI
-2051#	-2053#	-2054#	0.0039	50	S	R	CRC, DEI
-2057#	-2059#	-2060#	0.0047	50	S	R	CRC, DEI
-2063#	-2065#	-2066#	0.005	50	S	R	CRC, DEI
-2069#	-2071#	-2072#	0.0056	50	S	R	CRC, DEI
-2075#	-2077#	-2078#	0.0068	50	S	R	CRC, DEI
-2081#	-2083#	-2084#	0.0082	50	S	R	CRC, DEI
-2087#	-2089#	-2090#	0.01	50	S	R	CRC, DEI
-2093#	-2095#	-2096#	0.012	50	S	R	CRC, DEI
-2099#	-2101#	-2102#	0.015	50	S	R	CRC, DEI
-2105#	-2107#	-2108#	0.018	50	S	R	CRC, DEI
		Part Number (M83421/01-XXXX#)					
		Capacitance Tolerance	Capacitance	Rated	Level 1	Level 2	Manufacturer
+/- 1.0 %	+/- 5.0 %	+/- 10.0 %	Value (uF)	Voltage (V)	(FRL)(#)	(FRL)(#)	
-2111#	-2113#	-2114#	0.02	50	S	R	CRC, DEI
-2117#	-2119#	-2120#	0.022	50	S	R	CRC, DEI
-2123#	-2125#	-2126#	0.027	50	S	R	CRC, DEI
-2129#	-2131#	-2132#	0.033	50	S	R	CRC, DEI
-2135#	-2137#	-2138#	0.039	50	S	R	CRC, DEI
-2141#	-2143#	-2144#	0.047	50	S	R	CRC, DEI
-2147#	-2149#	-2150#	0.050	50	S	R	CRC, DEI
-2153#	-2155#	-2156#	0.056	50	S	R	CRC, DEI
-2159#	-2161#	-2162#	0.068	50	S	R	CRC, DEI
-2165#	-2167#	-2168#	0.082	50	S	R	CRC, DEI
-2171#	-2173#	-2174#	0.10	50	S	R	CRC, DEI
-2177#	-2179#	-2180#	0.12	50	S	R	CRC, DEI
-2183#	-2185#	-2186#	0.15	50	S	R	CRC, DEI
-2189#	-2191#	-2192#	0.18	50	S	R	CRC, DEI
-2195#	-2197#	-2198#	0.20	50	S	R	CRC, DEI
-2201#	-2203#	-2204#	0.22	50	S	R	CRC, DEI
-2207#	-2209#	-2210#	0.27	50	S	R	CRC, DEI
-2213#	-2215#	-2216#	0.33	50	S	R	CRC, DEI
		Part Number (M83421/01-XXXX#)					
		Capacitance Tolerance	Capacitance	Rated	Level 1	Level 2	Manufacturer
+/- 1.0 %	+/- 5.0 %	+/- 10.0 %	Value (uF)	Voltage (V)	(FRL)(#)	(FRL)(#)	
-2219#	-2221#	-2222#	0.39	50	S	R	CRC, DEI
-2225#	-2227#	-2228#	0.47	50	S	R	CRC, DEI
-2231#	-2233#	-2234#	0.50	50	S	R	CRC, DEI
-2237#	-2239#	-2240#	0.56	50	S	R	CRC, DEI
-2243#	-2245#	-2246#	0.68	50	S	R	CRC, DEI

-2249#	-2251#	-2252#	0.82	50	S	R	CRC, DEI
-2255#	-2257#	-2258#	1.0	50	S	R	CRC, DEI
-2261#	-2263#	-2264#	1.2	50	S	R	CRC, DEI
-2267#	-2269#	-2270#	1.5	50	S	R	CRC, DEI
-2273#	-2275#	-2276#	1.8	50	S	R	CRC, DEI
-2279#	-2281#	-2282#	2.0	50	S	R	CRC, DEI
-2285#	-2287#	-2288#	2.2	50	S	R	CRC, DEI
-2291#	-2293#	-2294#	2.7	50	S	R	CRC, DEI
-2297#	-2299#	-2300#	3.0	50	S	R	CRC, DEI
-2303#	-2305#	-2306#	3.3	50	S	R	CRC, DEI
-2309#	-2311#	-2312#	3.9	50	S	R	CRC, DEI
-2321#	-2323#	-2324#	4.7	50	S	R	CRC, DEI
-2327#	-2329#	-2330#	5.0	50	S	R	CRC, DEI
		Part Number (M83421/01-XXXX#)					
		Capacitance Tolerance	Capacitance	Rated	Level 1	Level 2	Manufacturer
+/- 1.0 %	+/- 5.0 %	+/- 10.0 %	Value (uF)	Voltage (V)	(FRL)(#)	(FRL)(#)	
-2333#	-2335#	-2336#	5.6	50	S	R	CRC, DEI
-2339#	-2341#	-2342#	6.8	50	S	R	CRC, DEI
-2345#	-2347#	-2348#	8.0	50	S	R	CRC, DEI
-2351#	-2353#	-2354#	8.2	50	S	R	CRC, DEI
-2357#	-2359#	-2360#	10.0	50	S	R	CRC, DEI
		Part Number (M83421/01-XXXX#)					
		Capacitance Tolerance	Capacitance	Rated	Level 1	Level 2	Manufacturer
+/- 1.0 %	+/- 5.0 %	+/- 10.0 %	Value (uF)	Voltage (V)	(FRL)(#)	(FRL)(#)	

CRH03 Plastic Film Capacitors

		Part Number (M83421/01-XXXX#)					
		Capacitance Tolerance	Capacitance	Rated	Level 1	Level 2	Manufacturer
+/- 1.0 %	+/- 5.0 %	+/- 10.0 %	Value (uF)	Voltage (V)	(FRL)(#)	(FRL)(#)	
-3003#	-3005#	-3006#	0.001	100	S	R	CRC, DEI
-3009#	-3011#	-3012#	0.0012	100	S	R	CRC, DEI
-3015#	-3017#	-3018#	0.0015	100	S	R	CRC, DEI
-3021#	-3023#	-3024#	0.0018	100	S	R	CRC, DEI
-3027#	-3029#	-3030#	0.002	100	S	R	CRC, DEI
-3033#	-3035#	-3036#	0.0022	100	S	R	CRC, DEI
-3039#	-3041#	-3042#	0.0027	100	S	R	CRC, DEI
-3045#	-3047#	-3048#	0.0033	100	S	R	CRC, DEI
-3051#	-3053#	-3054#	0.0039	100	S	R	CRC, DEI
-3057#	-3059#	-3060#	0.0047	100	S	R	CRC, DEI
-3063#	-3065#	-3066#	0.005	100	S	R	CRC, DEI
-3069#	-3071#	-3072#	0.0056	100	S	R	CRC, DEI
-3075#	-3077#	-3078#	0.0068	100	S	R	CRC, DEI
-3081#	-3083#	-3084#	0.0082	100	S	R	CRC, DEI
-3087#	-3089#	-3090#	0.01	100	S	R	CRC, DEI

-3093#	-3095#	-3096#	0.012	100	S	R	CRC, DEI
-3099#	-3101#	-3102#	0.015	100	S	R	CRC, DEI
-3105#	-3107#	-3108#	0.018	100	S	R	CRC, DEI
		Part Number (M83421/01-XXXX#)					
		Capacitance Tolerance	Capacitance	Rated	Level 1	Level 2	Manufacturer
+/- 1.0 %	+/- 5.0 %	+/- 10.0 %	Value (uF)	Voltage (V)	(FRL)(#)	(FRL)(#)	
-3111#	-3113#	-3114#	0.02	100	S	R	CRC, DEI
-3117#	-3119#	-3120#	0.022	100	S	R	CRC, DEI
-3123#	-3125#	-3126#	0.027	100	S	R	CRC, DEI
-3129#	-3131#	-3132#	0.033	100	S	R	CRC, DEI
-3135#	-3137#	-3138#	0.039	100	S	R	CRC, DEI
-3141#	-3143#	-3144#	0.047	100	S	R	CRC, DEI
-3147#	-3149#	-3150#	0.050	100	S	R	CRC, DEI
-3153#	-3155#	-3156#	0.056	100	S	R	CRC, DEI
-3159#	-3161#	-3162#	0.068	100	S	R	CRC, DEI
-3165#	-3167#	-3168#	0.082	100	S	R	CRC, DEI
-3171#	-3173#	-3174#	0.10	100	S	R	CRC, DEI
-3177#	-3179#	-3180#	0.12	100	S	R	CRC, DEI
-3183#	-3185#	-3186#	0.15	100	S	R	CRC, DEI
-3189#	-3191#	-3192#	0.18	100	S	R	CRC, DEI
-3195#	-3197#	-3198#	0.20	100	S	R	CRC, DEI
-3201#	-3203#	-3204#	0.22	100	S	R	CRC, DEI
-3207#	-3209#	-3210#	0.27	100	S	R	CRC, DEI
-3213#	-3215#	-3216#	0.33	100	S	R	CRC, DEI
		Part Number (M83421/01-XXXX#)					
		Capacitance Tolerance	Capacitance	Rated	Level 1	Level 2	Manufacturer
+/- 1.0 %	+/- 5.0 %	+/- 10.0 %	Value (uF)	Voltage (V)	(FRL)(#)	(FRL)(#)	
-3219#	-3221#	-3222#	0.39	100	S	R	CRC, DEI
-3225#	-3227#	-3228#	0.47	100	S	R	CRC, DEI
-3231#	-3233#	-3234#	0.50	100	S	R	CRC, DEI
-3237#	-3239#	-3240#	0.56	100	S	R	CRC, DEI
-3243#	-3245#	-3246#	0.68	100	S	R	CRC, DEI
-3249#	-3251#	-3252#	0.82	100	S	R	CRC, DEI
-3255#	-3257#	-3258#	1.0	100	S	R	CRC, DEI
-3261#	-3263#	-3264#	1.2	100	S	R	CRC, DEI
-3267#	-3269#	-3270#	1.5	100	S	R	CRC, DEI
-3273#	-3275#	-3276#	2.0	100	S	R	CRC, DEI
-3279#	-3281#	-3282#	2.2	100	S	R	CRC, DEI
-3285#	-3287#	-3288#	2.7	100	S	R	CRC, DEI
-3291#	-3293#	-3294#	3.0	100	S	R	CRC, DEI
-3297#	-3299#	-3300#	3.3	100	S	R	CRC, DEI
-3303#	-3305#	-3306#	3.9	100	S	R	CRC, DEI
-3315#	-3317#	-3318#	4.7	100	S	R	CRC, DEI
-3321#	-3323#	-3324#	5.0	100	S	R	CRC, DEI
-3327#	-3329#	-3330#	5.6	100	S	R	CRC, DEI
		Part Number (M83421/01-XXXX#)					
		Capacitance Tolerance	Capacitance	Rated	Level 1	Level 2	Manufacturer

+/- 1.0 %	+/- 5.0 %	+/- 10.0 %	Value (uF)	Voltage (V)	(FRL)(#)	(FRL)(#)	
-3333#	-3335#	-3336#	6.8	100	S	R	CRC, DEI
-3339#	-3341#	-3342#	8.0	100	S	R	CRC, DEI
-3345#	-3347#	-3348#	8.2	100	S	R	CRC, DEI
-3351#	-3353#	-3354#	10.0	100	S	R	CRC, DEI
		Part Number (M83421/01-XXXX#)					
		Capacitance Tolerance	Capacitance	Rated	Level 1	Level 2	Manufacturer
+/- 1.0 %	+/- 5.0 %	+/- 10.0 %	Value (uF)	Voltage (V)	(FRL)(#)	(FRL)(#)	

CRH04 Plastic Film Capacitors

		Part Number (M83421/01-XXXX#)					
		Capacitance Tolerance	Capacitance	Rated	Level 1	Level 2	Manufacturer
+/- 1.0 %	+/- 5.0 %	+/- 10.0 %	Value (uF)	Voltage (V)	(FRL)(#)	(FRL)(#)	
-4003#	-4005#	-4006#	0.001	200	S	R	CRC, DEI
-4009#	-4011#	-4012#	0.0012	200	S	R	CRC, DEI
-4015#	-4017#	-4018#	0.0015	200	S	R	CRC, DEI
-4021#	-4023#	-4024#	0.0018	200	S	R	CRC, DEI
-4027#	-4029#	-4030#	0.002	200	S	R	CRC, DEI
-4033#	-4035#	-4036#	0.0022	200	S	R	CRC, DEI
-4039#	-4041#	-4042#	0.0027	200	S	R	CRC, DEI
-4045#	-4047#	-4048#	0.0033	200	S	R	CRC, DEI
-4051#	-4053#	-4054#	0.0039	200	S	R	CRC, DEI
-4057#	-4059#	-4060#	0.0047	200	S	R	CRC, DEI
-4063#	-4065#	-4066#	0.005	200	S	R	CRC, DEI
-4069#	-4071#	-4072#	0.0056	200	S	R	CRC, DEI
-4075#	-4077#	-4078#	0.0068	200	S	R	CRC, DEI
-4081#	-4083#	-4084#	0.0082	200	S	R	CRC, DEI
-4087#	-4089#	-4090#	0.01	200	S	R	CRC, DEI
-4093#	-4095#	-4096#	0.012	200	S	R	CRC, DEI
-4099#	-4101#	-4102#	0.015	200	S	R	CRC, DEI
-4105#	-4107#	-4108#	0.018	200	S	R	CRC, DEI
		Part Number (M83421/01-XXXX#)					
		Capacitance Tolerance	Capacitance	Rated	Level 1	Level 2	Manufacturer
+/- 1.0 %	+/- 5.0 %	+/- 10.0 %	Value (uF)	Voltage (V)	(FRL)(#)	(FRL)(#)	
-4111#	-4113#	-4114#	0.02	200	S	R	CRC, DEI
-4117#	-4119#	-4120#	0.022	200	S	R	CRC, DEI
-4123#	-4125#	-4126#	0.027	200	S	R	CRC, DEI
-4129#	-4131#	-4132#	0.033	200	S	R	CRC, DEI
-4135#	-4137#	-4138#	0.039	200	S	R	CRC, DEI
-4141#	-4143#	-4144#	0.047	200	S	R	CRC, DEI
-4147#	-4149#	-4150#	0.050	200	S	R	CRC, DEI
-4153#	-4155#	-4156#	0.056	200	S	R	CRC, DEI
-4159#	-4161#	-4162#	0.068	200	S	R	CRC, DEI
-4165#	-4167#	-4168#	0.082	200	S	R	CRC, DEI

-4171#	-4173#	-4174#	0.10	200	S	R	CRC, DEI
-4177#	-4179#	-4180#	0.12	200	S	R	CRC, DEI
-4183#	-4185#	-4186#	0.15	200	S	R	CRC, DEI
-4189#	-4191#	-4192#	0.18	200	S	R	CRC, DEI
-4195#	-4197#	-4198#	0.20	200	S	R	CRC, DEI
-4201#	-4203#	-4204#	0.22	200	S	R	CRC, DEI
-4207#	-4209#	-4210#	0.27	200	S	R	CRC, DEI
-4213#	-4215#	-4216#	0.33	200	S	R	CRC, DEI
		Part Number (M83421/01-XXXX#)					
		Capacitance Tolerance	Capacitance	Rated	Level 1	Level 2	Manufacturer
+/- 1.0 %	+/- 5.0 %	+/- 10.0 %	Value (uF)	Voltage (V)	(FRL)(#)	(FRL)(#)	
-4219#	-4221#	-4222#	0.39	200	S	R	CRC, DEI
-4225#	-4227#	-4228#	0.47	200	S	R	CRC, DEI
-4231#	-4233#	-4234#	0.50	200	S	R	CRC, DEI
-4237#	-4239#	-4240#	0.56	200	S	R	CRC, DEI
-4243#	-4245#	-4246#	0.68	200	S	R	CRC, DEI
-4249#	-4251#	-4252#	0.82	200	S	R	CRC, DEI
-4255#	-4257#	-4258#	1.0	200	S	R	CRC, DEI
-4261#	-4263#	-4264#	1.2	200	S	R	CRC, DEI
-4267#	-4269#	-4270#	1.5	200	S	R	CRC, DEI
-4273#	-4275#	-4276#	1.8	200	S	R	CRC, DEI
-4279#	-4281#	-4282#	2.0	200	S	R	CRC, DEI
-4285#	-4287#	-4288#	2.2	200	S	R	CRC, DEI
-4291#	-4293#	-4294#	2.5	200	S	R	CRC, DEI
-4297#	-4299#	-4300#	2.7	200	S	R	CRC, DEI
-4303#	-4305#	-4306#	3.0	200	S	R	CRC, DEI
-4309#	-4311#	-4312#	3.3	200	S	R	CRC, DEI
-4315#	-4317#	-4318#	3.9	200	S	R	CRC, DEI
		Part Number (M83421/01-XXXX#)					
		Capacitance Tolerance	Capacitance	Rated	Level 1	Level 2	Manufacturer
+/- 1.0 %	+/- 5.0 %	+/- 10.0 %	Value (uF)	Voltage (V)	(FRL)(#)	(FRL)(#)	

CRH05 Plastic Film Capacitors

		Part Number (M83421/01-XXXX#)					
		Capacitance Tolerance	Capacitance	Rated	Level 1	Level 2	Manufacturer
+/- 1.0 %	+/- 5.0 %	+/- 10.0 %	Value (uF)	Voltage (V)	(FRL)(#)	(FRL)(#)	
-5003#	-5005#	-5006#	0.001	400	S	R	CRC, DEI
-5009#	-5011#	-5012#	0.0012	400	S	R	CRC, DEI
-5015#	-5017#	-5018#	0.0015	400	S	R	CRC, DEI
-5021#	-5023#	-5024#	0.0018	400	S	R	CRC, DEI
-5027#	-5029#	-5030#	0.0020	400	S	R	CRC, DEI
-5033#	-5035#	-5036#	0.0022	400	S	R	CRC, DEI
-5039#	-5041#	-5042#	0.0027	400	S	R	CRC, DEI
-5045#	-5047#	-5048#	0.0033	400	S	R	CRC, DEI

-5051#	-5053#	-5054#	0.0039	400	S	R	CRC, DEI
-5057#	-5059#	-5060#	0.0047	400	S	R	CRC, DEI
-5063#	-5065#	-5066#	0.0050	400	S	R	CRC, DEI
-5069#	-5071#	-5072#	0.0056	400	S	R	CRC, DEI
-5075#	-5077#	-5078#	0.0068	400	S	R	CRC, DEI
-5081#	-5083#	-5084#	0.0082	400	S	R	CRC, DEI
-5087#	-5089#	-5090#	0.010	400	S	R	CRC, DEI
-5093#	-5095#	-5096#	0.012	400	S	R	CRC, DEI
-5099#	-5101#	-5102#	0.015	400	S	R	CRC, DEI
-5105#	-5107#	-5108#	0.018	400	S	R	CRC, DEI
		Part Number (M83421/01-XXXX#)					
		Capacitance Tolerance	Capacitance	Rated	Level 1	Level 2	Manufacturer
+/- 1.0 %	+/- 5.0 %	+/- 10.0 %	Value (uF)	Voltage (V)	(FRL)(#)	(FRL)(#)	
-5273#	-5275#	-5276#	0.020	400	S	R	CRC, DEI
-5111#	-5113#	-5114#	0.022	400	S	R	CRC, DEI
-5117#	-5119#	-5120#	0.027	400	S	R	CRC, DEI
-5123#	-5125#	-5126#	0.033	400	S	R	CRC, DEI
-5129#	-5131#	-5132#	0.039	400	S	R	CRC, DEI
-5135#	-5137#	-5138#	0.047	400	S	R	CRC, DEI
-5141#	-5143#	-5144#	0.050	400	S	R	CRC, DEI
-5147#	-5149#	-5150#	0.056	400	S	R	CRC, DEI
-5153#	-5155#	-5156#	0.068	400	S	R	CRC, DEI
-5159#	-5161#	-5162#	0.082	400	S	R	CRC, DEI
-5165#	-5167#	-5168#	0.10	400	S	R	CRC, DEI
-5171#	-5173#	-5174#	0.12	400	S	R	CRC, DEI
-5177#	-5179#	-5180#	0.15	400	S	R	CRC, DEI
-5279#	-5281#	-5282#	0.18	400	S	R	CRC, DEI
-5183#	-5185#	-5186#	0.20	400	S	R	CRC, DEI
-5189#	-5191#	-5192#	0.22	400	S	R	CRC, DEI
-5195#	-5197#	-5198#	0.27	400	S	R	CRC, DEI
-5201#	-5203#	-5204#	0.33	400	S	R	CRC, DEI
		Part Number (M83421/01-XXXX#)					
		Capacitance Tolerance	Capacitance	Rated	Level 1	Level 2	Manufacturer
+/- 1.0 %	+/- 5.0 %	+/- 10.0 %	Value (uF)	Voltage (V)	(FRL)(#)	(FRL)(#)	
-5207#	-5209#	-5210#	0.39	400	S	R	CRC, DEI
-5213#	-5215#	-5216#	0.47	400	S	R	CRC, DEI
-5219#	-5221#	-5222#	0.50	400	S	R	CRC, DEI
-5225#	-5227#	-5228#	0.56	400	S	R	CRC, DEI
-5231#	-5233#	-5234#	0.68	400	S	R	CRC, DEI
-5237#	-5239#	-5240#	0.82	400	S	R	CRC, DEI
-5243#	-5245#	-5246#	1.0	400	S	R	CRC, DEI
-5249#	-5251#	-5252#	1.2	400	S	R	CRC, DEI
-5255#	-5257#	-5258#	1.5	400	S	R	CRC, DEI
-5261#	-5263#	-5264#	1.8	400	S	R	CRC, DEI
-5267#	-5269#	-5270#	2.0	400	S	R	CRC, DEI
		Part Number (M83421/01-XXXX#)					
		Capacitance Tolerance	Capacitance	Rated	Level 1	Level 2	Manufacturer

+/- 1.0 %	+/- 5.0 %	+/- 10.0 %	Value (uF)	Voltage (V)	(FRL)(#)	(FRL)(#)	

Go to -

NEPP

|

NPSL

|

Capacitors

MIL-PRF-87217, CAPACITORS

Fixed, Supermetallized, Plastic Film Dielectric, Direct Current for Low Energy,

High Impedence Applications, Hermetically Sealed in Metal Cases, High Reliability

CHS Styles

Part Number/Ordering Explanation

Important! Application Notes

Revision History for MIL-PRF-87217 Listing in the NPSL

Last Revision: 08/05/99

Click on the link below to see the associated parts selection listing:

Style	Detail Specification	Description
CHS01	MIL-PRF-87217/1	Axial lead, hermetically sealed 0.001 uF to 10 uF (30 V)
CHS02	MIL-PRF-87217/1	Axial lead, hermetically sealed 0.001 uF to 10 uF (50 V)
CHS03	MIL-PRF-87217/1	Axial lead, hermetically sealed 0.001 uF to 10 uF (100 V)

APPLICATION NOTES FOR MIL-PRF-87217

1) To ensure proper "self healing" characteristics of these capacitors, it is recommended that the cirucit in which capacitors of 0.1 uF and greater capacitance are intended for use should be capable of providing at 100 microjoules of energy. This recommendation is based on the "self healing" properties of plastic film capacitors and the need for sufficient energy to be available to promote self healing. Without adequate energy available, self healing will not occur and parts may catastrophically fail short circuit.

2) Parts covered by this specification contain internal soldered connections which may reflow during installation.. The plastic dielectric in these parts is also temperature sensitive. Special precautions such as heat sinking are recommended when soldering onto boards.

Revision History for MIL-PRF-87217 Listing in the NPSL

08/05/99	Changed specification name to "MIL-PRF-87217" rather than "MIL-C-87217" to reference the conversion to performance based specifications
05/01/97	Initial Release of MIL-C-87217 Section in the NPSL

Part Number Ordering Information, example and explanation:

M87217/01-1001A where,

M87217	/01	-1	001
Military Specification Number	Detail Specification Number	Single digit which identifies the capacitor style and rated voltage	Three-digit dash number which uniquely identifies the capacitance, tolerance, a

Part number ordering options are developed using the following criteria:

Style	Rated Voltage
CHS01	30 Vdc
CHS02	50 Vdc
CHS03	100 Vdc

CHS01 Plastic Film Capacitors

					Part Number (M87217/01-XXXX#)					
					Capacitance Tolerance	Cap.	Rated	Config.		
+/- 0.25 %	+/- 0.5 %	+/- 1 %	+/- 2 %	+/- 5 %	+/- 10 %	Value (uF)	Volage (V)	(#)	Level	Manufacturer
-1001#	-1002#	-1003#	-1004#	-1005#	-1006#	0.001	30	A or B	1 or 2	CRC
-1007#	-1008#	-1009#	-1010#	-1011#	-1012#	0.0012	30	A or B	1 or 2	CRC
-1013#	-1014#	-1015#	-1016#	-1017#	-1018#	0.0015	30	A or B	1 or 2	CRC
-1019#	-1020#	-1021#	-1022#	-1023#	-1024#	0.0018	30	A or B	1 or 2	CRC
-1025#	-1026#	-1027#	-1028#	-1029#	-1030#	0.002	30	A or B	1 or 2	CRC
-1031#	-1032#	-1033#	-1034#	-1035#	-1036#	0.0022	30	A or B	1 or 2	CRC
-1037#	-1038#	-1039#	-1040#	-1041#	-1042#	0.0027	30	A or B	1 or 2	CRC
-1043#	-1044#	-1045#	-1046#	-1047#	-1048#	0.0033	30	A or B	1 or 2	CRC
-1049#	-1050#	-1051#	-1052#	-1053#	-1054#	0.0039	30	A or B	1 or 2	CRC
-1055#	-1056#	-1057#	-1058#	-1059#	-1060#	0.0047	30	A or B	1 or 2	CRC
-1061#	-1062#	-1063#	-1064#	-1065#	-1066#	0.005	30	A or B	1 or 2	CRC
-1067#	-1068#	-1069#	-1070#	-1071#	-1072#	0.0056	30	A or B	1 or 2	CRC
-1073#	-1074#	-1075#	-1076#	-1077#	-1078#	0.0068	30	A or B	1 or 2	CRC
-1079#	-1080#	-1081#	-1082#	-1083#	-1084#	0.0082	30	A or B	1 or 2	CRC
-1085#	-1086#	-1087#	-1088#	-1089#	-1090#	0.01	30	A or B	1 or 2	CRC
-1091#	-1092#	-1093#	-1094#	-1095#	-1096#	0.012	30	A or B	1 or 2	CRC
-1097#	-1098#	-1099#	-1100#	-1101#	-1102#	0.015	30	A or B	1 or 2	CRC
-1103#	-1104#	-1105#	-1106#	-1107#	-1108#	0.018	30	A or B	1 or 2	CRC
					Part Number (M87217/01-XXXX#)					
					Capacitance Tolerance	Cap.	Rated	Config.		
+/- 0.25 %	+/- 0.5 %	+/- 1 %	+/- 2 %	+/- 5 %	+/- 10 %	Value (uF)	Volage (V)	(#)	Level	Manufacturer
-1109#	-1110#	-1111#	-1112#	-1113#	-1114#	0.02	30	A or B	1 or 2	CRC
-1115#	-1116#	-1117#	-1118#	-1119#	-1120#	0.022	30	A or B	1 or 2	CRC
-1121#	-1122#	-1123#	-1124#	-1125#	-1126#	0.027	30	A or B	1 or 2	CRC
-1127#	-1128#	-1129#	-1130#	-1131#	-1132#	0.033	30	A or B	1 or 2	CRC
-1133#	-1134#	-1135#	-1136#	-1137#	-1138#	0.039	30	A or B	1 or 2	CRC
-1139#	-1140#	-1141#	-1142#	-1143#	-1144#	0.047	30	A or B	1 or 2	CRC
-1145#	-1146#	-1147#	-1148#	-1149#	-1150#	0.050	30	A or B	1 or 2	CRC
-1151#	-1152#	-1153#	-1154#	-1155#	-1156#	0.056	30	A or B	1 or 2	CRC
-1157#	-1158#	-1159#	-1160#	-1161#	-1162#	0.068	30	A or B	1 or 2	CRC
-1163#	-1164#	-1165#	-1166#	-1167#	-1168#	0.082	30	A or B	1 or 2	CRC

-1169#	-1170#	-1171#	-1172#	-1173#	-1174#	0.10	30	A or B	1 or 2	CRC
-1175#	-1176#	-1177#	-1178#	-1179#	-1180#	0.12	30	A or B	1 or 2	CRC
-1181#	-1182#	-1183#	-1184#	-1185#	-1186#	0.15	30	A or B	1 or 2	CRC
-1373#	-1374#	-1375#	-1376#	-1377#	-1378#	0.18	30	A or B	1 or 2	CRC
-1187#	-1188#	-1189#	-1190#	-1191#	-1192#	0.20	30	A or B	1 or 2	CRC
-1193#	-1194#	-1195#	-1196#	-1197#	-1198#	0.22	30	A or B	1 or 2	CRC
-1199#	-1200#	-1201#	-1202#	-1203#	-1204#	0.27	30	A or B	1 or 2	CRC
-1205#	-1206#	-1207#	-1208#	-1209#	-1210#	0.33	30	A or B	1 or 2	CRC
					Part Number (M87217/01-XXXX#)					
					Capacitance Tolerance	Cap.	Rated	Config.		
+/- 0.25 %	+/- 0.5 %	+/- 1 %	+/- 2 %	+/- 5 %	+/- 10 %	Value (uF)	Volage (V)	(#)	Level	Manufacturer
-1211#	-1212#	-1213#	-1214#	-1215#	-1216#	0.39	30	A or B	1 or 2	CRC
-1217#	-1218#	-1219#	-1220#	-1221#	-1222#	0.47	30	A or B	1 or 2	CRC
-1223#	-1224#	-1225#	-1226#	-1227#	-1228#	0.50	30	A or B	1 or 2	CRC
-1229#	-1230#	-1231#	-1232#	-1233#	-1234#	0.56	30	A or B	1 or 2	CRC
-1235#	-1236#	-1237#	-1238#	-1239#	-1240#	0.68	30	A or B	1 or 2	CRC
-1241#	-1242#	-1243#	-1244#	-1245#	-1246#	0.82	30	A or B	1 or 2	CRC
-1247#	-1248#	-1249#	-1250#	-1251#	-1252#	1.0	30	A or B	1 or 2	CRC
-1253#	-1254#	-1255#	-1256#	-1257#	-1258#	1.2	30	A or B	1 or 2	CRC
-1259#	-1260#	-1261#	-1262#	-1263#	-1264#	1.5	30	A or B	1 or 2	CRC
-1265#	-1266#	-1267#	-1268#	-1269#	-1270#	1.8	30	A or B	1 or 2	CRC
-1271#	-1272#	-1273#	-1274#	-1275#	-1276#	2.0	30	A or B	1 or 2	CRC
-1277#	-1278#	-1279#	-1280#	-1281#	-1282#	2.2	30	A or B	1 or 2	CRC
-1385#	-1386#	-1387#	-1388#	-1389#	-1390#	2.7	30	A or B	1 or 2	CRC
-1289#	-1290#	-1291#	-1292#	-1293#	-1294#	3.0	30	A or B	1 or 2	CRC
-1295#	-1296#	-1297#	-1298#	-1299#	-1300#	3.3	30	A or B	1 or 2	CRC
-1301#	-1302#	-1303#	-1304#	-1305#	-1306#	3.9	30	A or B	1 or 2	CRC
-1313#	-1314#	-1315#	-1316#	-1317#	-1318#	4.7	30	A or B	1 or 2	CRC
-1319#	-1320#	-1321#	-1322#	-1323#	-1324#	5.0	30	A or B	1 or 2	CRC
					Part Number (M87217/01-XXXX#)					
					Capacitance Tolerance	Cap.	Rated	Config.		
+/- 0.25 %	+/- 0.5 %	+/- 1 %	+/- 2 %	+/- 5 %	+/- 10 %	Value (uF)	Volage (V)	(#)	Level	Manufacturer
-1325#	-1326#	-1327#	-1328#	-1329#	-1330#	5.6	30	A or B	1 or 2	CRC
-1331#	-1332#	-1333#	-1334#	-1335#	-1336#	6.8	30	A or B	1 or 2	CRC
-1337#	-1338#	-1339#	-1340#	-1341#	-1342#	8.0	30	A or B	1 or 2	CRC
-1343#	-1344#	-1345#	-1346#	-1347#	-1348#	8.2	30	A or B	1 or 2	CRC
-1349#	-1350#	-1351#	-1352#	-1353#	-1354#	10.0	30	A or B	1 or 2	CRC
					Part Number (M87217/01-XXXX#)					
					Capacitance Tolerance	Cap.	Rated	Config.		
+/- 0.25 %	+/- 0.5 %	+/- 1 %	+/- 2 %	+/- 5 %	+/- 10 %	Value (uF)	Volage (V)	(#)	Level	Manufacturer

CHS02 Plastic Film Capacitors

					Part Number (M87217/01-XXXX#)					
					Capacitance Tolerance	Cap.	Rated	Config.		

+/- 0.25 %	+/- 0.5 %	+/- 1 %	+/- 2 %	+/- 5 %	+/- 10 %	Value (uF)	Volage (V)	(#)	Level	Manufacturer
-2001#	-2002#	-2003#	-2004#	-2005#	-2006#	0.001	50	A or B	1 or 2	CRC
-2007#	-2008#	-2009#	-2010#	-2011#	-2012#	0.0012	50	A or B	1 or 2	CRC
-2013#	-2014#	-2015#	-2016#	-2017#	-2018#	0.0015	50	A or B	1 or 2	CRC
-2019#	-2020#	-2021#	-2022#	-2023#	-2024#	0.0018	50	A or B	1 or 2	CRC
-2025#	-2026#	-2027#	-2028#	-2029#	-2030#	0.002	50	A or B	1 or 2	CRC
-2031#	-2032#	-2033#	-2034#	-2035#	-2036#	0.0022	50	A or B	1 or 2	CRC
-2037#	-2038#	-2039#	-2040#	-2041#	-2042#	0.0027	50	A or B	1 or 2	CRC
-2043#	-2044#	-2045#	-2046#	-2047#	-2048#	0.0033	50	A or B	1 or 2	CRC
-2049#	-2050#	-2051#	-2052#	-2053#	-2054#	0.0039	50	A or B	1 or 2	CRC
-2055#	-2056#	-2057#	-2058#	-2059#	-2060#	0.0047	50	A or B	1 or 2	CRC
-2061#	-2062#	-2063#	-2064#	-2065#	-2066#	0.005	50	A or B	1 or 2	CRC
-2067#	-2068#	-2069#	-2070#	-2071#	-2072#	0.0056	50	A or B	1 or 2	CRC
-2073#	-2074#	-2075#	-2076#	-2077#	-2078#	0.0068	50	A or B	1 or 2	CRC
-2079#	-2080#	-2081#	-2082#	-2083#	-2084#	0.0082	50	A or B	1 or 2	CRC
-2085#	-2086#	-2087#	-2088#	-2089#	-2090#	0.01	50	A or B	1 or 2	CRC
-2091#	-2092#	-2093#	-2094#	-2095#	-2096#	0.012	50	A or B	1 or 2	CRC
-2097#	-2098#	-2099#	-2100#	-2101#	-2102#	0.015	50	A or B	1 or 2	CRC
-2103#	-2104#	-2105#	-2106#	-2107#	-2108#	0.018	50	A or B	1 or 2	CRC
					Part Number (M87217/01-XXXX#)					
					Capacitance Tolerance	Cap.	Rated	Config.		
+/- 0.25 %	+/- 0.5 %	+/- 1 %	+/- 2 %	+/- 5 %	+/- 10 %	Value (uF)	Volage (V)	(#)	Level	Manufacturer
-2109#	-2110#	-2111#	-2112#	-2113#	-2114#	0.02	50	A or B	1 or 2	CRC
-2115#	-2116#	-2117#	-2118#	-2119#	-2120#	0.022	50	A or B	1 or 2	CRC
-2121#	-2122#	-2123#	-2124#	-2125#	-2126#	0.027	50	A or B	1 or 2	CRC
-2127#	-2128#	-2129#	-2130#	-2131#	-2132#	0.033	50	A or B	1 or 2	CRC
-2133#	-2134#	-2135#	-2136#	-2137#	-2138#	0.039	50	A or B	1 or 2	CRC
-2139#	-2140#	-2141#	-2142#	-2143#	-2144#	0.047	50	A or B	1 or 2	CRC
-2145#	-2146#	-2147#	-2148#	-2149#	-2150#	0.050	50	A or B	1 or 2	CRC
-2151#	-2152#	-2153#	-2154#	-2155#	-2156#	0.056	50	A or B	1 or 2	CRC
-2157#	-2158#	-2159#	-2160#	-2161#	-2162#	0.068	50	A or B	1 or 2	CRC
-2163#	-2164#	-2165#	-2166#	-2167#	-2168#	0.082	50	A or B	1 or 2	CRC
-2169#	-2170#	-2171#	-2172#	-2173#	-2174#	0.1	50	A or B	1 or 2	CRC
-2175#	-2176#	-2177#	-2178#	-2179#	-2180#	0.12	50	A or B	1 or 2	CRC
-2181#	-2182#	-2183#	-2184#	-2185#	-2186#	0.15	50	A or B	1 or 2	CRC
-2187#	-2188#	-2189#	-2190#	-2191#	-2192#	0.18	50	A or B	1 or 2	CRC
-2193#	-2194#	-2195#	-2196#	-2197#	-2198#	0.20	50	A or B	1 or 2	CRC
-2199#	-2200#	-2201#	-2202#	-2203#	-2204#	0.22	50	A or B	1 or 2	CRC
-2205#	-2206#	-2207#	-2208#	-2209#	-2210#	0.27	50	A or B	1 or 2	CRC
-2211#	-2212#	-2213#	-2214#	-2215#	-2216#	0.33	50	A or B	1 or 2	CRC
					Part Number (M87217/01-XXXX#)					
					Capacitance Tolerance	Cap.	Rated	Config.		
+/- 0.25 %	+/- 0.5 %	+/- 1 %	+/- 2 %	+/- 5 %	+/- 10 %	Value (uF)	Volage (V)	(#)	Level	Manufacturer
-2217#	-2218#	-2219#	-2220#	-2221#	-2222#	0.39	50	A or B	1 or 2	CRC
-2223#	-2224#	-2225#	-2226#	-2227#	-2228#	0.47	50	A or B	1 or 2	CRC
-2229#	-2230#	-2231#	-2232#	-2233#	-2234#	0.50	50	A or B	1 or 2	CRC
-2235#	-2236#	-2237#	-2238#	-2239#	-2240#	0.56	50	A or B	1 or 2	CRC

-2241#	-2242#	-2243#	-2244#	-2245#	-2246#	0.68	50	A or B	1 or 2	CRC
-2247#	-2248#	-2249#	-2250#	-2251#	-2252#	0.82	50	A or B	1 or 2	CRC
-2253#	-2254#	-2255#	-2256#	-2257#	-2258#	1.0	50	A or B	1 or 2	CRC
-2259#	-2260#	-2261#	-2262#	-2263#	-2264#	1.2	50	A or B	1 or 2	CRC
-2265#	-2266#	-2267#	-2268#	-2269#	-2270#	1.5	50	A or B	1 or 2	CRC
-2271#	-2272#	-2273#	-2274#	-2275#	-2276#	1.8	50	A or B	1 or 2	CRC
-2277#	-2278#	-2279#	-2280#	-2281#	-2282#	2.0	50	A or B	1 or 2	CRC
-2283#	-2284#	-2285#	-2286#	-2287#	-2288#	2.2	50	A or B	1 or 2	CRC
-2289#	-2290#	-2291#	-2292#	-2293#	-2294#	2.7	50	A or B	1 or 2	CRC
-2295#	-2296#	-2297#	-2298#	-2299#	-2300#	3.0	50	A or B	1 or 2	CRC
-2301#	-2302#	-2303#	-2304#	-2305#	-2306#	3.3	50	A or B	1 or 2	CRC
-2307#	-2308#	-2309#	-2310#	-2311#	-2312#	3.9	50	A or B	1 or 2	CRC
-2319#	-2320#	-2321#	-2322#	-2323#	-2324#	4.7	50	A or B	1 or 2	CRC
-2325#	-2326#	-2327#	-2328#	-2329#	-2330#	5.0	50	A or B	1 or 2	CRC
					Part Number (M87217/01-XXXX#)					
					Capacitance Tolerance	Cap.	Rated	Config.		
+/- 0.25 %	+/- 0.5 %	+/- 1 %	+/- 2 %	+/- 5 %	+/- 10 %	Value (uF)	Volage (V)	(#)	Level	Manufacturer
-2331#	-2332#	-2333#	-2334#	-2335#	-2336#	5.6	50	A or B	1 or 2	CRC
-2337#	-2338#	-2339#	-2340#	-2341#	-2342#	6.8	50	A or B	1 or 2	CRC
-2343#	-2344#	-2345#	-2346#	-2347#	-2348#	8.0	50	A or B	1 or 2	CRC
-2349#	-2350#	-2351#	-2352#	-2353#	-2354#	8.2	50	A or B	1 or 2	CRC
-2355#	-2356#	-2357#	-2358#	-2359#	-2360#	10.0	50	A or B	1 or 2	CRC
					Part Number (M87217/01-XXXX#)					
					Capacitance Tolerance	Cap.	Rated	Config.		
+/- 0.25 %	+/- 0.5 %	+/- 1 %	+/- 2 %	+/- 5 %	+/- 10 %	Value (uF)	Volage (V)	(#)	Level	Manufacturer

CHS03 Plastic Film Capacitors

					Part Number (M87217/01-XXXX#)					
					Capacitance Tolerance	Cap.	Rated	Config.		
+/-0.25 %	+/-0.5 %	+/- 1 %	+/- 2 %	+/- 5 %	+/- 10 %	Value (uF)	Volage (V)	(#)	Level	Manufacturer
-3001#	-3002#	-3003#	-3004#	-3005#	-3006#	0.001	100	A or B	1 or 2	CRC
-3007#	-3008#	-3009#	-3010#	-3011#	-3012#	0.0012	100	A or B	1 or 2	CRC
-3013#	-3014#	-3015#	-3016#	-3017#	-3018#	0.0015	100	A or B	1 or 2	CRC
-3019#	-3020#	-3021#	-3022#	-3023#	-3024#	0.0018	100	A or B	1 or 2	CRC
-3025#	-3026#	-3027#	-3028#	-3029#	-3030#	0.002	100	A or B	1 or 2	CRC
-3031#	-3032#	-3033#	-3034#	-3035#	-3036#	0.0022	100	A or B	1 or 2	CRC
-3037#	-3038#	-3039#	-3040#	-3041#	-3042#	0.0027	100	A or B	1 or 2	CRC
-3043#	-3044#	-3045#	-3046#	-3047#	-3048#	0.0033	100	A or B	1 or 2	CRC
-3049#	-3050#	-3051#	-3052#	-3053#	-3054#	0.0039	100	A or B	1 or 2	CRC
-3055#	-3056#	-3057#	-3058#	-3059#	-3060#	0.0047	100	A or B	1 or 2	CRC
-3061#	-3062#	-3063#	-3064#	-3065#	-3066#	0.005	100	A or B	1 or 2	CRC
-3067#	-3068#	-3069#	-3070#	-3071#	-3072#	0.0056	100	A or B	1 or 2	CRC
-3073#	-3074#	-3075#	-3076#	-3077#	-3078#	0.0068	100	A or B	1 or 2	CRC
-3079#	-3080#	-3081#	-3082#	-3083#	-3084#	0.0082	100	A or B	1 or 2	CRC

-3085#	-3086#	-3087#	-3088#	-3089#	-3090#	0.010	100	A or B	1 or 2	CRC
-3091#	-3092#	-3093#	-3094#	-3095#	-3096#	0.012	100	A or B	1 or 2	CRC
-3097#	-3098#	-3099#	-3100#	-3101#	-3102#	0.015	100	A or B	1 or 2	CRC
-3103#	-3104#	-3105#	-3106#	-3107#	-3108#	0.018	100	A or B	1 or 2	CRC
					Part Number (M87217/01-XXXX#)					
					Capacitance Tolerance	Cap.	Rated	Config.		
+/-0.25 %	+/-0.5 %	+/- 1 %	+/- 2 %	+/- 5 %	+/- 10 %	Value (uF)	Volage (V)	(#)	Level	Manufacturer
-3109#	-3110#	-3111#	-3112#	-3113#	-3114#	0.020	100	A or B	1 or 2	CRC
-3115#	-3116#	-3117#	-3118#	-3119#	-3120#	0.022	100	A or B	1 or 2	CRC
-3121#	-3122#	-3123#	-3124#	-3125#	-3126#	0.027	100	A or B	1 or 2	CRC
-3127#	-3128#	-3129#	-3130#	-3131#	-3132#	0.033	100	A or B	1 or 2	CRC
-3133#	-3134#	-3135#	-3136#	-3137#	-3138#	0.039	100	A or B	1 or 2	CRC
-3139#	-3140#	-3141#	-3142#	-3143#	-3144#	0.047	100	A or B	1 or 2	CRC
-3145#	-3146#	-3147#	-3148#	-3149#	-3150#	0.050	100	A or B	1 or 2	CRC
-3151#	-3152#	-3153#	-3154#	-3155#	-3156#	0.056	100	A or B	1 or 2	CRC
-3157#	-3158#	-3159#	-3160#	-3161#	-3162#	0.068	100	A or B	1 or 2	CRC
-3163#	-3164#	-3165#	-3166#	-3167#	-3168#	0.082	100	A or B	1 or 2	CRC
-3169#	-3170#	-3171#	-3172#	-3173#	-3174#	0.10	100	A or B	1 or 2	CRC
-3175#	-3176#	-3177#	-3178#	-3179#	-3180#	0.12	100	A or B	1 or 2	CRC
-3181#	-3182#	-3183#	-3184#	-3185#	-3186#	0.15	100	A or B	1 or 2	CRC
-3187#	-3188#	-3189#	-3190#	-3191#	-3192#	0.18	100	A or B	1 or 2	CRC
-3193#	-3194#	-3195#	-3196#	-3197#	-3198#	0.20	100	A or B	1 or 2	CRC
-3199#	-3200#	-3201#	-3202#	-3203#	-3204#	0.22	100	A or B	1 or 2	CRC
-3205#	-3206#	-3207#	-3208#	-3209#	-3210#	0.27	100	A or B	1 or 2	CRC
-3211#	-3212#	-3213#	-3214#	-3215#	-3216#	0.33	100	A or B	1 or 2	CRC
					Part Number (M87217/01-XXXX#)					
					Capacitance Tolerance	Cap.	Rated	Config.		
+/-0.25 %	+/-0.5 %	+/- 1 %	+/- 2 %	+/- 5 %	+/- 10 %	Value (uF)	Volage (V)	(#)	Level	Manufacturer
-3217#	-3218#	-3219#	-3220#	-3221#	-3222#	0.39	100	A or B	1 or 2	CRC
-3223#	-3224#	-3225#	-3226#	-3227#	-3228#	0.47	100	A or B	1 or 2	CRC
-3229#	-3230#	-3231#	-3232#	-3233#	-3234#	0.50	100	A or B	1 or 2	CRC
-3235#	-3236#	-3237#	-3238#	-3239#	-3240#	0.56	100	A or B	1 or 2	CRC
-3241#	-3242#	-3243#	-3244#	-3245#	-3246#	0.68	100	A or B	1 or 2	CRC
-3247#	-3248#	-3249#	-3250#	-3251#	-3252#	0.82	100	A or B	1 or 2	CRC
-3253#	-3254#	-3255#	-3256#	-3257#	-3258#	1.0	100	A or B	1 or 2	CRC
-3259#	-3260#	-3261#	-3262#	-3263#	-3264#	1.2	100	A or B	1 or 2	CRC
-3265#	-3266#	-3267#	-3268#	-3269#	-3270#	1.5	100	A or B	1 or 2	CRC
-3271#	-3272#	-3273#	-3274#	-3275#	-3276#	2.0	100	A or B	1 or 2	CRC
-3277#	-3278#	-3279#	-3280#	-3281#	-3282#	2.2	100	A or B	1 or 2	CRC
-3283#	-3284#	-3285#	-3286#	-3287#	-3288#	2.7	100	A or B	1 or 2	CRC
-3289#	-3290#	-3291#	-3292#	-3293#	-3294#	3.0	100	A or B	1 or 2	CRC
-3295#	-3296#	-3297#	-3298#	-3299#	-3300#	3.3	100	A or B	1 or 2	CRC
-3301#	-3302#	-3303#	-3304#	-3305#	-3306#	3.9	100	A or B	1 or 2	CRC
-3313#	-3314#	-3315#	-3316#	-3317#	-3318#	4.7	100	A or B	1 or 2	CRC
-3319#	-3320#	-3321#	-3322#	-3323#	-3324#	5.0	100	A or B	1 or 2	CRC
-3325#	-3326#	-3327#	-3328#	-3329#	-3330#	5.6	100	A or B	1 or 2	CRC
					Part Number (M87217/01-XXXX#)					

					Capacitance Tolerance	Cap.	Rated	Config.		
+/-0.25 %	+/-0.5 %	+/- 1 %	+/- 2 %	+/- 5 %	+/- 10 %	Value (uF)	Volage (V)	(#)	Level	Manufacturer
-3331#	-3332#	-3333#	-3334#	-3335#	-3336#	6.8	100	A or B	1 or 2	CRC
-3337#	-3338#	-3339#	-3340#	-3341#	-3342#	8.0	100	A or B	1 or 2	CRC
-3343#	-3344#	-3345#	-3346#	-3347#	-3348#	8.2	100	A or B	1 or 2	CRC
-3349#	-3350#	-3351#	-3352#	-3353#	-3354#	10.0	100	A or B	1 or 2	CRC

Home
|
NASA Parts Selection List (NPSL)
| Fuses
About NPSL
Prohibited Materials
Parts Selection Table of Contents
Capacitors
Circuit Protection Devices
Fuses
Connectors
Filters
Inductors
Microcircuits
NEW!
Monolithics
Hybrids
Resistors
Semiconductors
(Summary)
Diodes
Transistors
Thermistors
Wire and Cable

NASA Parts Selection List

Fuses

The following Fuse specifications are available for selection:

Military Specification	Generic Designator	Description
MIL-PRF-23419	FM	Fuse, Subminiature, Cartridge, Instrument Type

Parts
|
Packaging
|
Radiation
|

Publications

|

Calendar

|

Experts

Admin Login

|

Request Account

|

Feedback

|

Site Map

|

Help

|

Search

NEPP Program Manager:

Chuck Barnes, Jet Propulsion Laboratory

Responsible NASA Official:

Michael Sampson, NEPAG Manager

Website Comments:

Web Development Team

Last Modified:

August 8, 2001

AETD IT Security Banner

NASA Privacy Statement

Click on the link below to see the associated parts selection listing:

Style	Detail Specification	Description (Click Here for Dimensions)
FM04	MIL-PRF-23419/4	Subminiature, Nonindicating, Cartridge, Instrument Type 1/16 A to 10 A (125 V) 15 A (32 V)
FM08	MIL-PRF-23419/8	Subminiature, High Performance, Cartridge, Instrument Type 1/8 A to 10 A (125 V) 15 A (32 V)
FM12	MIL-PRF-23419/12	Subminiature, High Performance, Cartridge, Instrument Type 1/8 A to 5 A (125 V) 1/8 A to 15 A (72 V) 20 A (50 V)

APPLICATION NOTES FOR MIL-PRF-23419

1) Subminiature fuses are heat sensitive and not mechanically rugged. Use special handling and soldering for these parts. These fuses are particularly susceptible to internal fracture during lead bending. If lead forming is required, always support the lead between the endcap and desired bend area prior to bending. Never bend the lead while grasping the fuse body.

2) FM04 and FM08 fuses rated at 1/2 Ampere or less require special application considerations. These fuses use a different material for the fuse element than the higher amperage devices. Due to the difference in thermal conductivity, the lower amperage devices rely heavily on air conduction as a means of heat transfer. The potential loss of the atmosphere within the fuse package (due to the loss of hermeticity during prolonged exposure to the space environment) will have a significant impact on the element's ability to transfer heat. This situation may lead to over heating of the element. To compound the concerns, at elevated temperatures the thermal conductivity of the element for the lower amperage devices changes drastically which can lead to sudden

thermal changes. These thermal changes may lead to premature thermal and/or mechanical fatigue failure of the fuse element. Consult a parts engineering specialist for further details on this phenomenon.

Revision History for MIL-PRF-23419 Listing in the NPSL

02/03/03	Updated FM12 section to include all fuses rated at 72V. Added 1/16A, 125V rated FM04 to listings. Also, updated Manufacturer Address Lstings for FM08 and FM04 based upon QPL-23419-43 dated 08/24/01.
05/11/99	Updated this section to show that the specification has been converted to a "performance" specification. Hence all references to the specification number have changed from MIL-F-23419 to MIL-PRF-23419
12/17/97	Initial Release of MIL-F-23419 Fuse Section in the NPSL

Part Number Ordering Information, example and explanation:

FM08A125V1/8A where,

FM08	A	125V	1/8A
Style (Fuse, Cartridge, Instrument Type Conforming to MIL-PRF-23419)	Characteristic	Voltage Rating	Current Rating

Click Here for Outline Dimensions

Part number ordering options are developed using the following criteria:

Style	Detail Specification	Description
FM04	MIL-PRF-23419/4	Axial Lead, Level 2 Applications
FM08	MIL-PRF-23419/8	Axial Lead, Level 1 or 2 Applications
FM12	MIL-PRF-23419/12	Radial Lead, Level 1 or 2 Applications

Characteristic	Relative Overload Interrupt Time
A	Normal

The Voltage Rating shall be the maximum direct current (dc) or alternating current (ac) root mean square (rms) voltage for which a fuse is designed. The voltage rating is identified by a numerical value followed by the letter "V".

The Current Rating ist the amount of current a fuse will carry indefinitely without interruption. The current rating in amperes and fractions of an ampere is identified by a numerical value followed by the letter "A".

Fuses rated below 1 A use fractions to represent the current rating in the part number (ex.: "1/8A" or "3/4A"). In general, fuses rated above 1 A which are not integers use decimals for the current rating in the part number (ex.: "1.5A" or "2.5A"). However, MIL-PRF-23419/4 (FM04) still uses the fractional representation for parts rated above 1 A (ex.: "1-1/2A"). See the parts listings herein for specific part number formats.

FM04 (All Amperages)

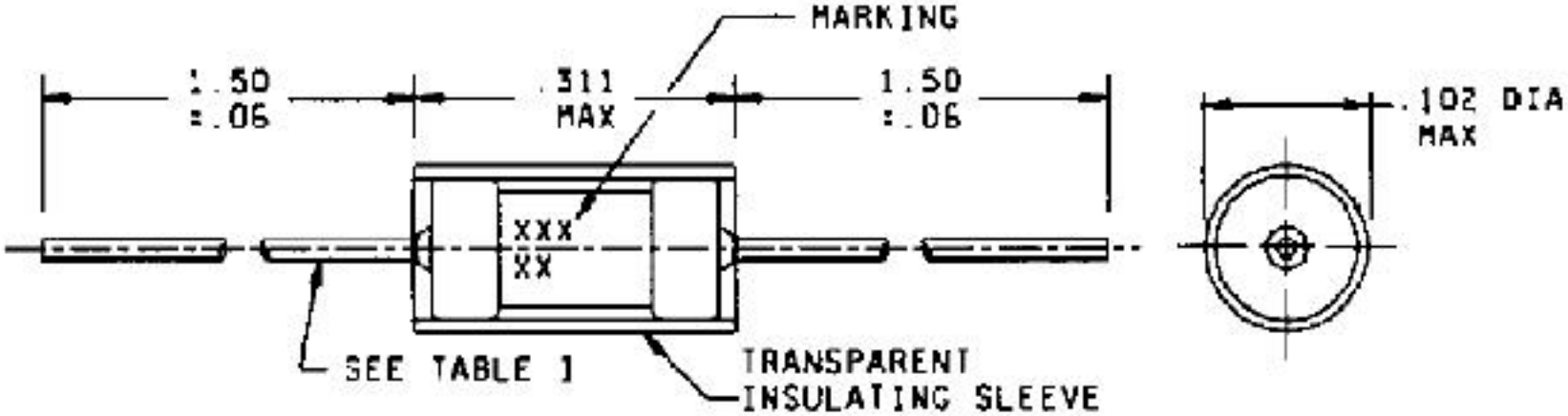

FM08 (all Amperages)

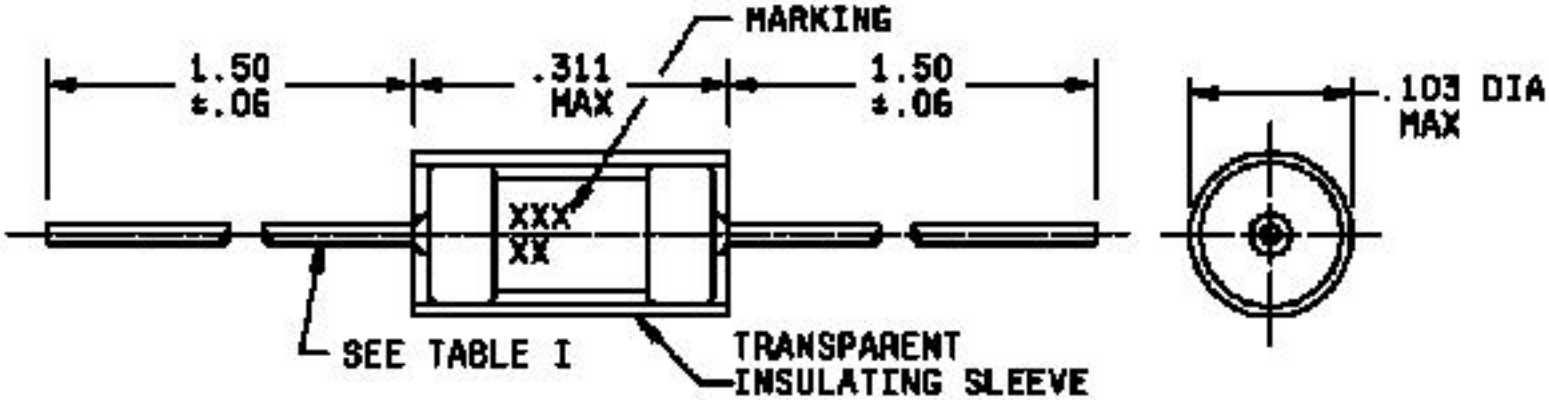

FM12

(1/8A thru 3/8A 125 V rated and 1/8 A thru 7.5A 72 V rated
)

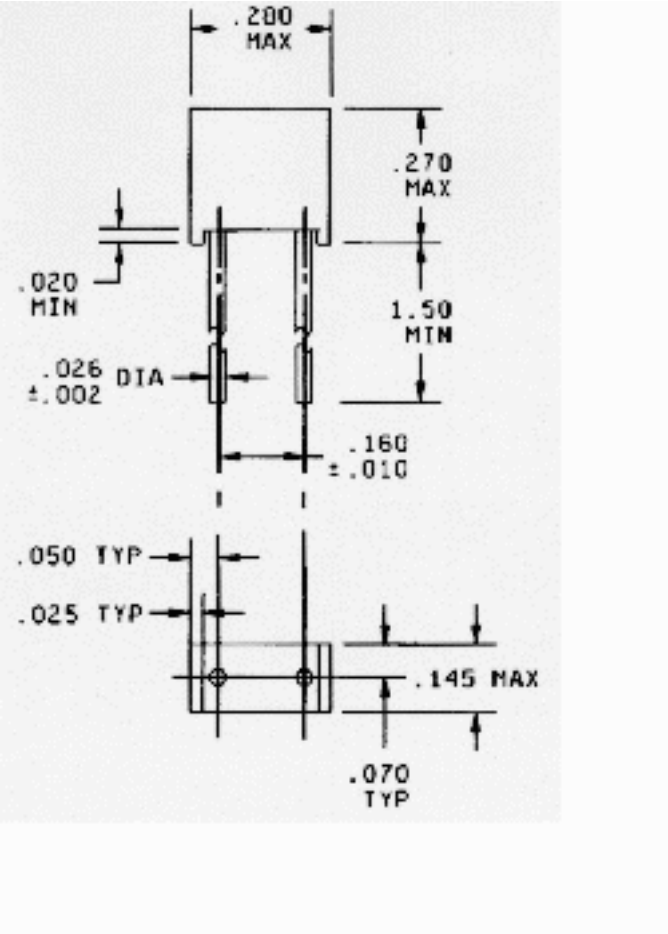

FM12
(1/2A thru 5A 125 V rated and 10A thru 15A 72 V rated)

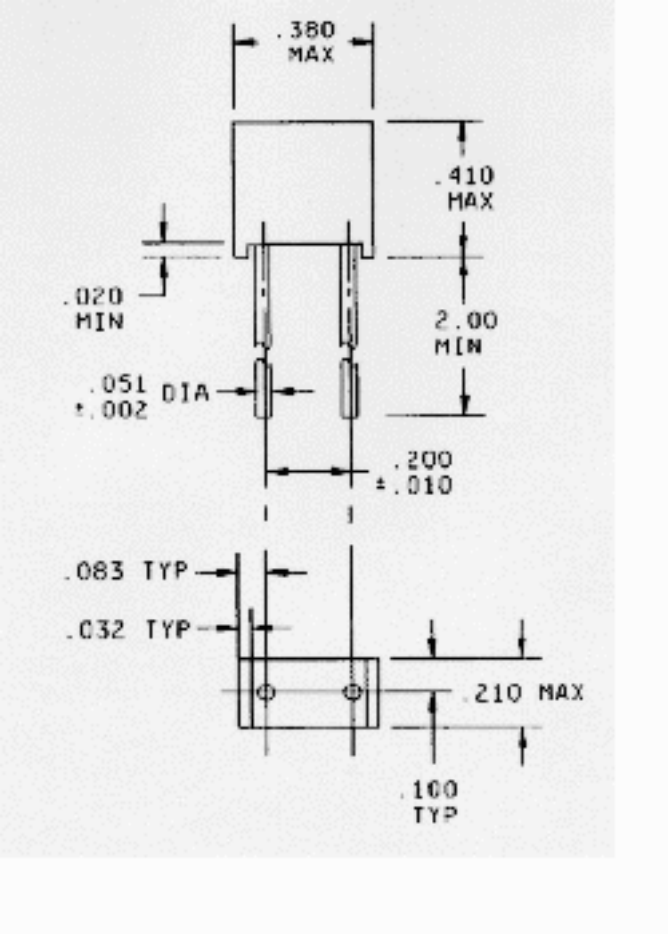

FM12

(20A 50V rated)

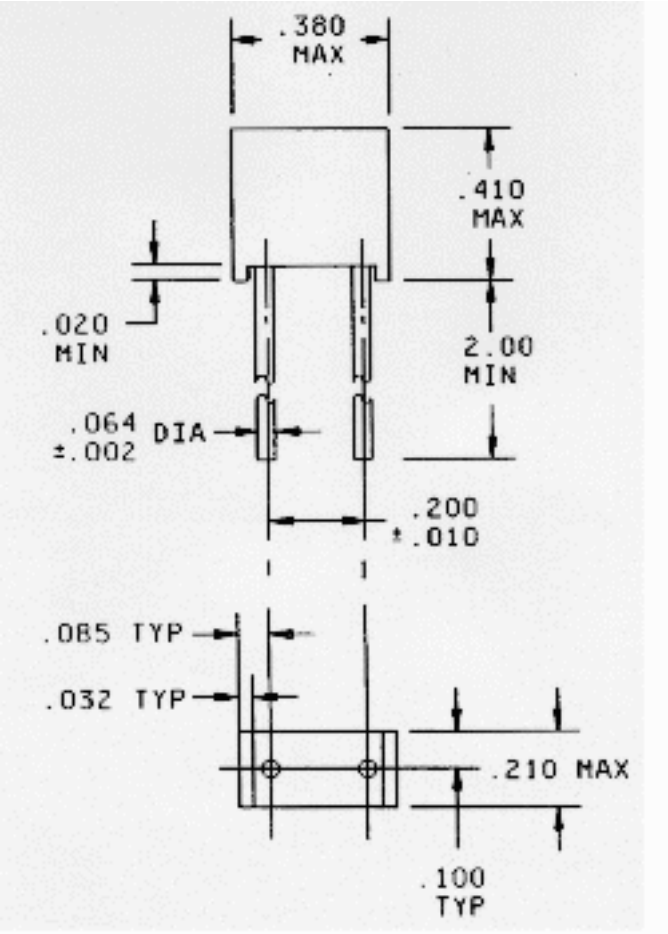

FM04 Subminiature Fuses

Click Here for Outline Dimensions

Part Number	Current Rating (Amps)	Rated Voltage (Volts)	Cold Resistance Max. (Ohms)	Level	Manufacturer
FM04A125V1/16A	1/16	125	9.100	2	LIT
FM04A125V1/8A	1/8	125	2.700	2	LIT
FM04A125V1/4A	1/4	125	0.960	2	BUS, LIT
FM04A125V3/8A	3/8	125	0.560	2	BUS, LIT
FM04A125V1/2A	1/2	125	0.365	2	BUS, LIT

FM04A125V3/4A	3/4	125	0.215	2	BUS, LIT
FM04A125V1A	1	125	0.165	2	BUS, LIT
FM04A125V1-1/2A	1.5	125	0.105	2	BUS, LIT
FM04A125V2A	2	125	0.072	2	BUS, LIT
FM04A125V3A	3	125	0.047	2	BUS, LIT
FM04A125V4A	4	125	0.029	2	BUS, LIT
FM04A125V5A	5	125	0.019	2	BUS, LIT
FM04A125V7A	7	125	0.013	2	BUS, LIT
FM04A125V10A	10	125	0.008	2	BUS, LIT
FM04A32V15A	15	32	0.0053	2	BUS, LIT

FM08 Subminiature Fuses

Click Here for Outline Dimensions

Part Number	Current Rating (Amps)	Rated Voltage (Volts)	Voltage Drop @ Rated Current (Volts)	Cold Resistance Limits (Ohms)	Level	Manufacturer
FM08A125V1/8A	1/8	125	0.850-1.150	1.890-2.310	1 or 2	BUS, LIT
FM08A125V1/4A	1/4	125	0.590-0.800	0.639-0.781	1 or 2	BUS, LIT
FM08A125V3/8A	3/8	125	0.527-0.713	0.378-0.462	1 or 2	BUS, LIT
FM08A125V1/2A	1/2	125	0.488-0.660	0.252-0.308	1 or 2	BUS, LIT
FM08A125V3/4A	3/4	125	0.145-0.197	0.153-0.187	1 or 2	BUS, LIT
FM08A125V1A	1	125	0.157-0.213	0.112-0.138	1 or 2	BUS, LIT
FM08A125V1.5A	1.5	125	0.153-0.207	0.072-0.088	1 or 2	BUS, LIT
FM08A125V2A	2	125	0.144-0.196	0.0495-0.0605	1 or 2	BUS, LIT
FM08A125V2.5A	2.5	125	0.125-0.169	0.0378-0.0462	1 or 2	BUS, LIT
FM08A125V3A	3	125	0.139-0.187	0.0315-0.0388	1 or 2	BUS1,LIT
FM08A125V4A	4	125	0.110-0.150	0.0207-0.0253	1 or 2	BUS, LIT
FM08A125V5A	5	125	0.087-0.118	0.0126-0.0154	1 or 2	BUS, LIT
FM08A125V7A	7	125	0.087-0.118	0.0090-0.0110	1 or 2	BUS, LIT
FM08A125V10A	10	125	0.085-0.110	0.0059-0.0070	1 or 2	BUS, LIT
FM08A32V15A	15	32	0.065-0.087	0.0036-0.0044	1 or 2	BUS, LIT

FM12 Subminiature Fuses

Click Here for Outline Dimensions

Part Number	Current Rating (Amps)	Rated Voltage (Volts)	Cold Resistance Limits (Ohms)	Level	Manufacturer
FM12A125V1/8A	1/8	125	6.375-10.625	2	AEM
FM12A125V1/4A	1/4	125	1.875-3.125	2	AEM
FM12A125V3/8A	3/8	125	1.125-1.875	2	AEM
FM12A125V1/2A	1/2	125	0.675-1.125	2	AEM
FM12A125V3/4A	3/4	125	0.225-0.375	2	AEM
FM12A125V1A	1	125	0.090-0.270	2	AEM
FM12A125V1.5A	1.5	125	0.0850-0.2250	2	AEM
FM12A125V2.0A	2	125	0.0450-0.1350	2	AEM
FM12A125V3.0A	3	125	0.0350-0.1050	2	AEM

FM12A125V4.0A	4	125	0.0300-0.0900	2	AEM
FM12A125V5.0A	5	125	0.0220-0.0680	2	AEM
FM12A72V1/8A	1/8	72	6.375-10.625	2	AEM
FM12A72V1/4A	1/4	72	1.875-3.125	2	AEM
FM12A72V3/8A	3/8	72	1.125-1.875	2	AEM
FM12A72V1/2A	1/2	72	0.675-1.125	2	AEM
FM12A72V3/4A	3/4	72	0.225-0.375	2	AEM
FM12A72V1A	1	72	0.135-0.225	2	AEM
FM12A72V1.5A	1.5	72	0.097-0.163	2	AEM
FM12A72V2.0A	2	72	0.045-0.075	2	AEM
FM12A72V3.0A	3	72	0.0262-0.0438	2	AEM
FM12A72V4.0A	4	72	0.0195-0.0325	2	AEM
FM12A72V5.0A	5	72	0.0135-0.0225	2	AEM
FM12A72V6.0A	6	72	0.0112-0.0188	2	AEM
FM12A72V7.5A	7.5	72	0.0082-0.0138	2	AEM
FM12A72V10A	10	72	0.0063-0.0107	2	AEM
FM12A72V15A	15	72	0.0038-0.0070	2	AEM
FM12A50V20A	20	50	0.0025-0.0050	2	AEM

Fuse Manufacturer Listing

Listed below are links to manufacturer data sites that may provide additional part related information. The linked sites are not under the control of NPSL and NASA is not responsible for information contained in the linked site. We are providing these links for your convenience only.

AEM

11525 Sorrento Valley Road

San Diego, CA 92121

CAGE Code: 1GLF1 (formerly: 30983)

BUS

Bussmann Division (A Subsidiary of Cooper Industries)

210 Dixie Trail

Goldsboro, NC 27530

CAGE Code: 71400

LIT

Littelfuse, Inc.

100 W. Johnson Street

Centralia,IL 62801

CAGE Code: 75915

NASA Parts Selection List

Connectors

The following basic connector types are available for selection:

Circular

MSFC 40M38277 NLS

MSFC 40M38298 NBS

MSFC 40M39569 NB

MIL-DTL-38999 MS27XXX

MIL-DTL-38999 D38999/XX

MIL-C-26482 MS34XX

MIL-C-5015 MS345X

D Subminiature

GSFC S-311-P-4/07 311P407

GSFC S-311-P-10 311P10

GSFC S-311-P-4/05 311P405

MIL-DTL-24308 M24308

RF

MIL-PRF-39012 M39012/XX

MIL-C-83517 M83517/X

Microminiature

MIL-PRF-83513 M83513/XX

Printed Circuit

MIL-C-55302 M55302/XX

Satellite Interface

GSFC S-311-P-718 700-42

Contacts

MIL-C-39029 M39029/XX

Accessories

MIL-C-85049 M85049/XX

Parts

|

Packaging

|

Radiation

|

Publications

|

Calendar

|

Experts

Admin Login

|

Request Account

|

Feedback

|

Site Map

|

Help

|

Search

NEPP Program Manager:

Chuck Barnes, Jet Propulsion Laboratory

Responsible NASA Official:

Michael Sampson, NEPAG Manager

Website Comments:

Web Development Team

Last Modified:

August 8, 2001

AETD IT Security Banner

NASA Privacy Statement

Home

|

NASA Parts Selection List (NPSL)

|

Connectors

| Circular Connectors

About NPSL

Prohibited Materials

Parts Selection Table of Contents

Capacitors

Circuit Protection Devices

Fuses

Connectors

Filters

Inductors

Microcircuits

NEW!

Monolithics

Hybrids

Resistors

Semiconductors

(Summary)

Diodes

Transistors

Thermistors

Wire and Cable

Circular Connectors

The following circular connector types are available for selection:

Type Designation	Description	Specification
NLS	Circular, High Density, Miniature, Low Outgassing	MSFC 40M38277
NBS	Circular, Miniature, Low Outgassing, Special, Shell Size 8	MSFC 40M38298
NB	Circular, Miniature, Low Outgassing	MSFC 40M39569
MS27XXX	Circular, Miniature, Series I, Bayonet Coupled	MIL-DTL-38999
MS27XXX	Circular, Low Silhouette, Miniature, Series II	MIL-DTL-38999
D38999/XX	Circular, Miniature, Series III, Self Locking Coupling	MIL-DTL-38999
D38999/XX	Circular, Miniature, Series IV, Breech Coupling	MIL-DTL-38999
MS34XX	Circular, Miniature, Series 2	MIL-C-26482
MS345X	Circular, Crimp Rear Release Contacts	MIL-C-5015

NEPP Program Manager:
Chuck Barnes, Jet Propulsion Laboratory
Responsible NASA Official:
Michael Sampson, NEPAG Manager
Website Comments:
Web Development Team
Last Modified:

August 8, 2001

AETD IT Security Banner

NASA Privacy Statement

Go to -

NEPP

|

NPSL

|

Connectors

MSFC 40M39569 Connectors

Circular Connectors, Low Outgassing, Bayonet Coupled, -150deg.C to +200deg.C

Part Number/Ordering Explanation

Important! Application Notes

Available Sources

Recent NASA Parts Selection List Updates for MSFC 40M39569 Connectors

Initial Release:

01/28/98

MSFC 40M39569 Connectors

Circular Connectors, Low Outgassing, Bayonet Coupled, -150deg.C to +200deg.C

APPLICATION NOTES

1) Connectors are supplied with contacts.

2) Insert arrangement designation consists of shell size and arrangement number. For 40M39569 connectors, insert arrangements with a variety of contact sizes are available.

3) Temperature range for hermetically sealed connectors is -100deg.C to +150deg.C.

Recent NASA Parts Selection List Updates for

MSFC 40M39569 Connectors

01/28/98	Initial Release of MSFC 40M39569 Connector Section in the NPSL On-Line

MSFC 40M39569 Connectors

Circular Connectors, Low Outgassing, Bayonet Coupled, -150deg.C to +200deg.C

Part Number Ordering Information:

Example of P/N: NB6E8-98PNS2, where

NB	6	E	8	-98	P	N	S	2
Series Prefix	Shell Style	Class (Seal)	Shell Size	Arrangement Number	Contact Type	Insert Polarization	Backshell Accessory	Temp. Class

Shell Style Designator	Description
0	Receptacle, Flange Mount, Narrow
3	Receptacle, Solder Mount, Hermetic
4	Receptacle, Flange Mount, Wide Flange
5	Bulkhead Feed Thru, Hermetic, Jam Nut Mount
6	Plug, Cable Mount
6G	Plug, Cable Mount with RFI Grounding Fingers
7	Receptacle, Jam Nut Mount
8	Receptacle, Jam Nut Mount, Extended Pin

Class (Seal) Designator	Description
E	Environmental
H	Hermetic

Contact Type Designator	Description
P	Pins
S	Sockets
CP	Coaxial Pin
CS	Coaxial Socket
PS	Pin-Socket Feedthru (Shell Style 5 Only)

Insert Polarization Designator	Description
N	Normal
W	Alternate
X	Alternate
Y	Alternate
Z	Alternate

Backshell Accessory Designator	Description
C	Straight, Compression Ring
S	Straight, with Cable Clamp
R	Right Angle, Cable Clamp
T	No Backshell

Temperature Class Designator	Description
Blank	General Purpose (-100deg.C to +200deg.C)
2	Vacuum Thermal Cycled (-150deg.C to +200deg.C)

3	Atmosphere Thermal Cycled (-150deg.C to +200deg.C)

No. of Contacts

(By Contact Size)

Insert Arrangement	20	16	12	Coax
8-98	3	-	-	-
10-6	6	-	-	-
12-3	-	3	-	-
12-8	8	-	-	-
12-10	10	-	-	-
14-4	-	-	4	-
14-5	-	5	-	-
14-12	8	4	-	-
14-15	14	1	-	-
14-18	18	-	-	-
14-19	19	-	-	-
16-8	-	-	8	-
16-23	-	22	1	-
16-26	26	-	-	-
18-8	-	-	8	-
18-11	-	11	-	-
18-30	29	1	-	-
18-32	32	-	-	-
20-16	-	16	-	-
20-41	37	2	-	-
22-12	-	-	12	-
22-21	-	21	-	-
22-41	27	14	-	-
22-55	55	-	-	-
24-19	-	-	19	-
24-31	-	31	-	
24-61	61	-	-	-
24-100	-	-	-	8

Shell Size 8 (Insert Arrangements)
Shell Sizes 10 (Insert Arrangements)
Shell Sizes 12 (Insert Arrangements)
Shell Sizes 14 (Insert Arrangements)
Shell Sizes 16 (Insert Arrangements)
Shell Sizes 18 (Insert Arrangements)
Shell Sizes 20 (Insert Arrangements)
Shell Sizes 22 (Insert Arrangements)

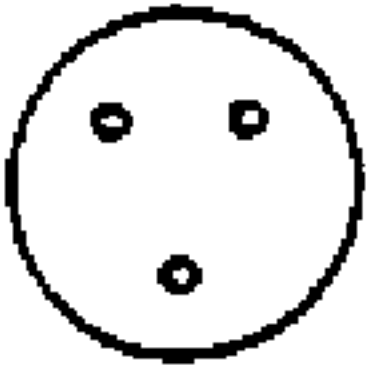

8-98

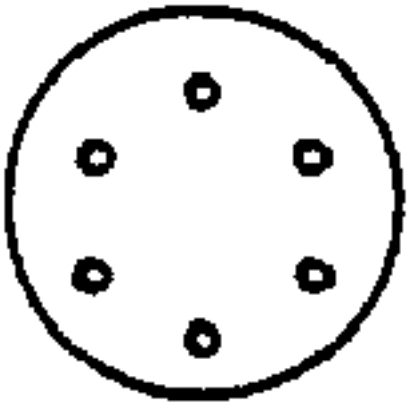

10-6

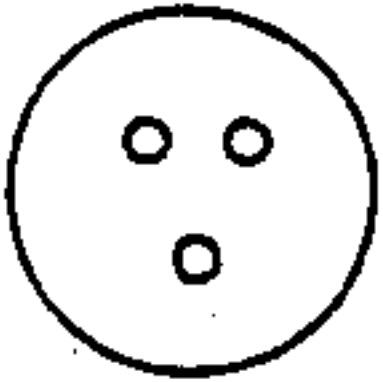

12-3

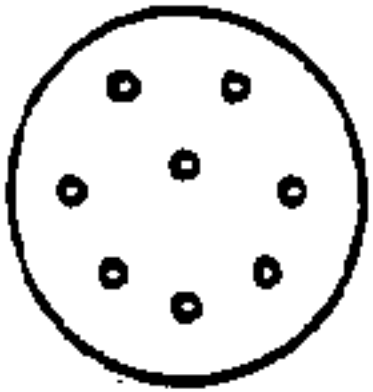

12-8

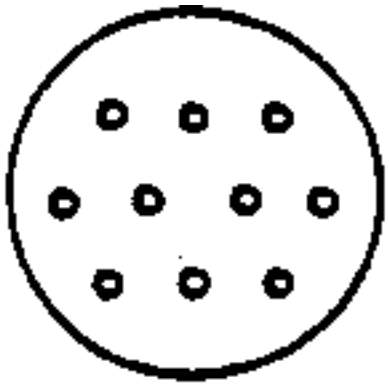

12-10

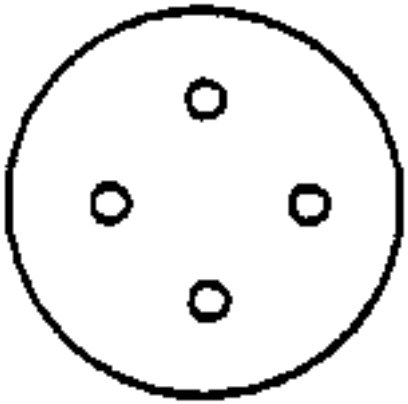

14-4

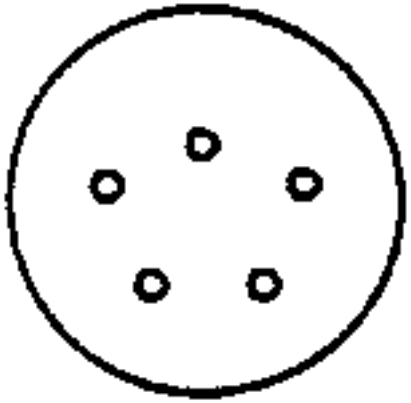

14-5

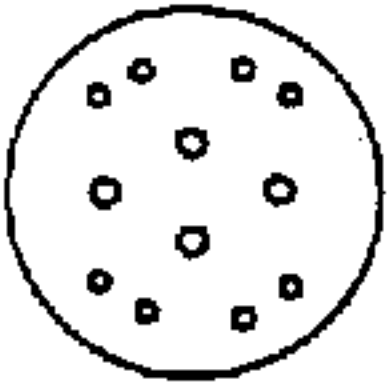

14-12

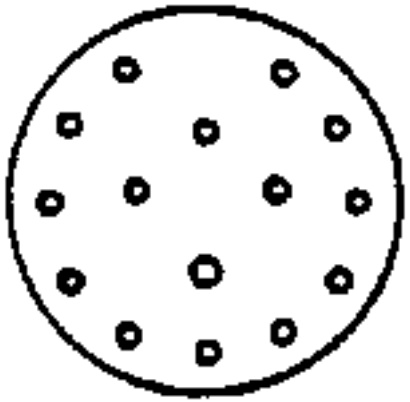

14-15

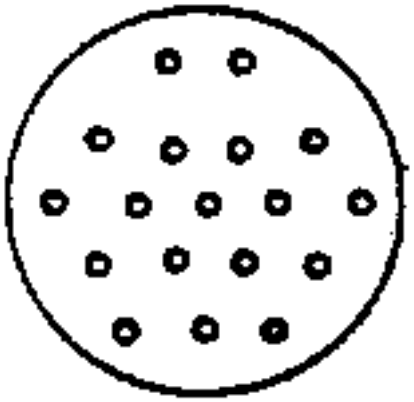

14-18

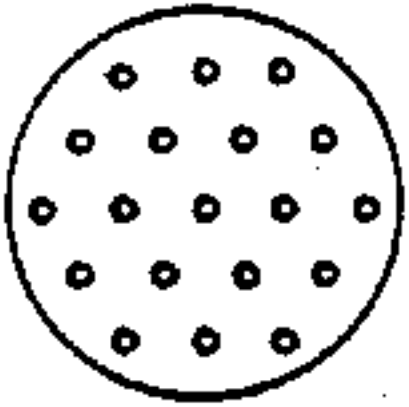

14-19

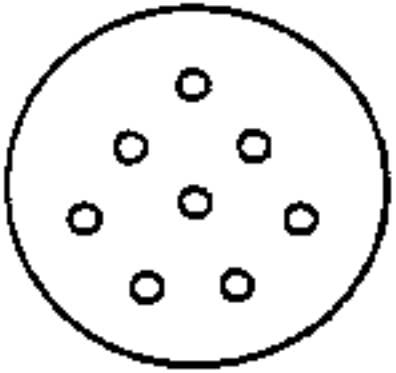

16-8

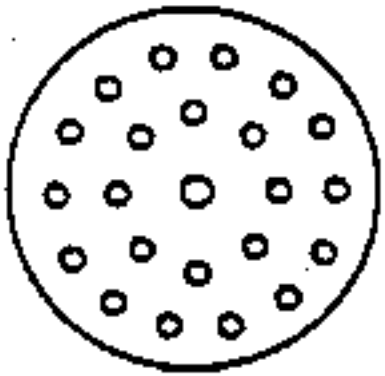

16-23

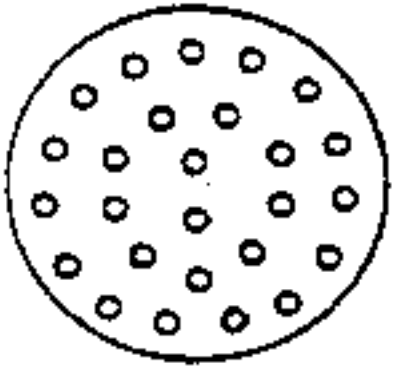

16-26

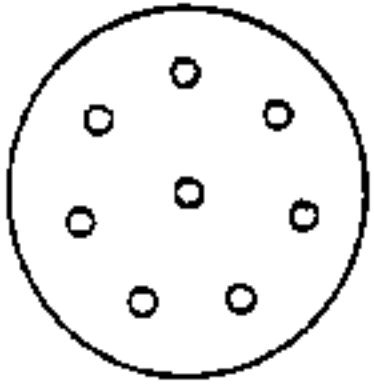

18-8

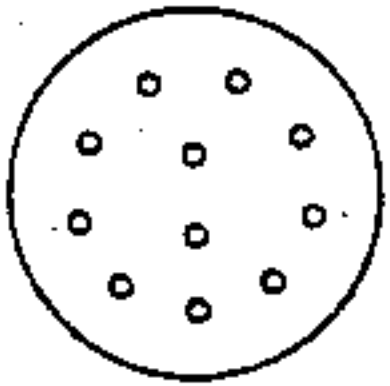

18-11

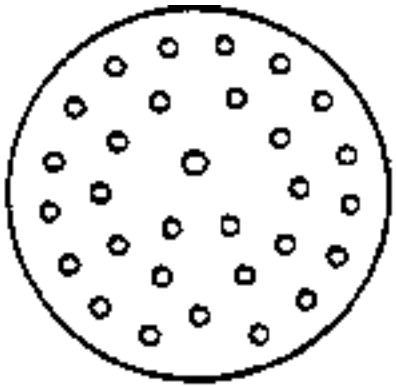

18-30

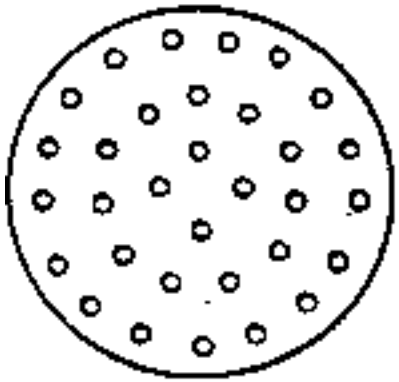

18-32

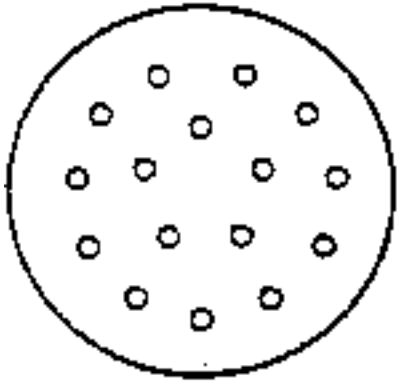

20-16

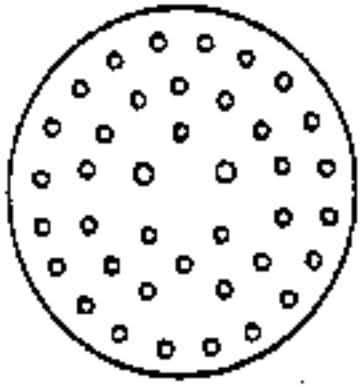

20-39

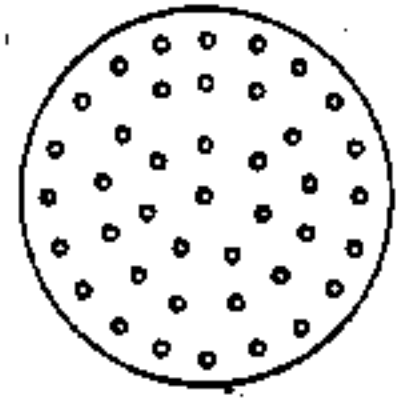

20-41

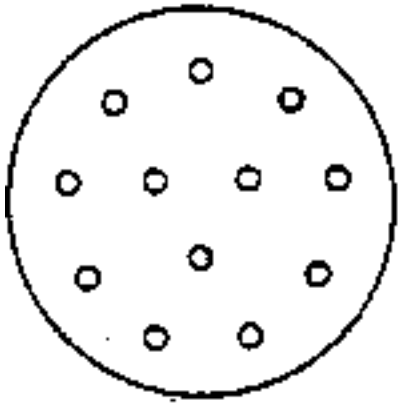

22-12

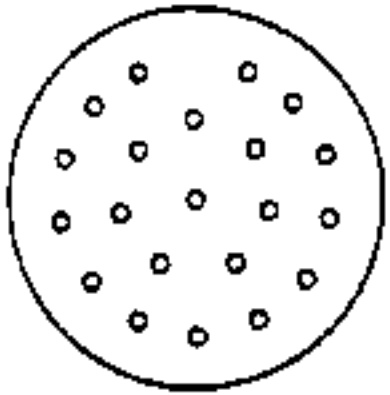

22-21

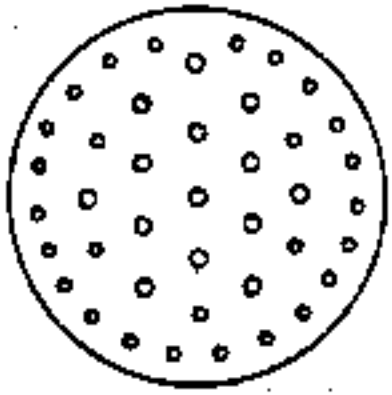

22-41

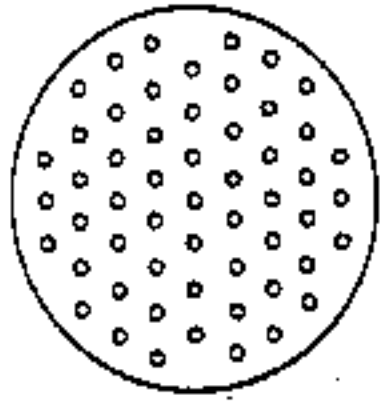

22-55

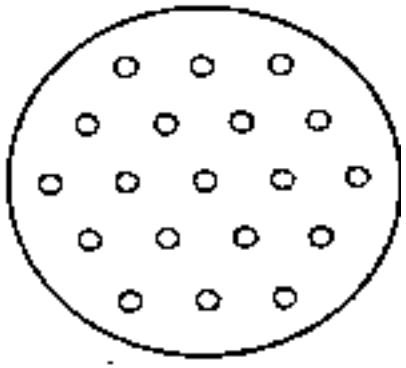

24-19

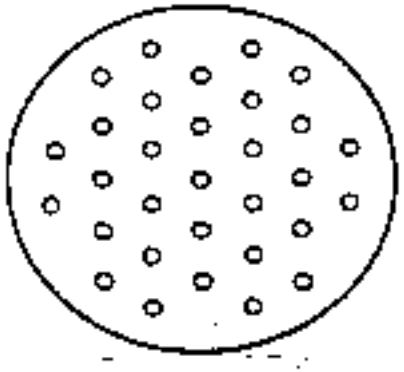

24-31

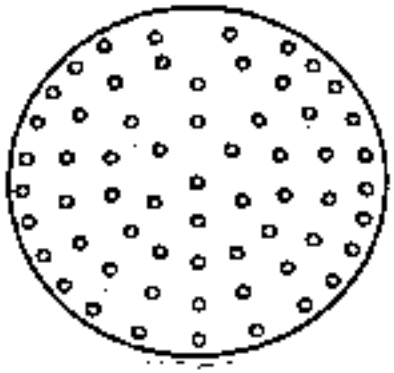

24-61

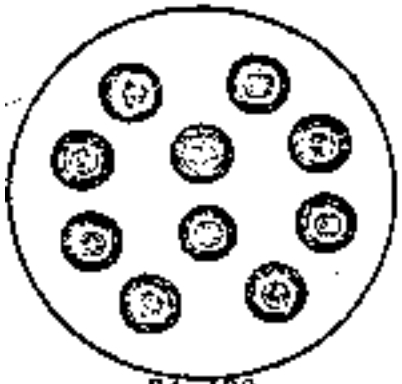

MSFC 40M39569 Connectors Manufacturer Listing

Links to Manufacturer Homepages

Click

here

for detailed information regarding part technologies offered by manufacturers listed in the

PSAP

Core Suppliers List

Listed below are links to manufacturer data sites that may provide additional part related information. The linked sites are not under the control of NPSL and NASA is not responsible for information contained in the linked site. We are providing these links for your convenience only.

Deutsch Engineered Connecting Devices

36033 Whittier Avenue

Hemet, CA 92545

Cage Code: 11139

Tel.: 909-765-2200

Glenair, Inc.

(Backshells Only)

1211 Air Way

Glen Dale CA 91201

Cage Code: 06324

Tel.: 818-247-6000

ITT Cannon

666 East Dyer Rd

Santa Ana, CA 92705

Cage Code: 71468

Tel.: 714-557-4700

Go to -

NEPP

|

NPSL

|

Connectors

MSFC 40M38298 Connectors

Circular Connectors, Miniature, Low Outgassing,

Bayonet Coupled, -150deg.C to +200deg.C

Part Number/Ordering Explanation

Important! Application Notes

Available Sources

Recent NASA Parts Selection List Updates for MSFC 40M38298 Connectors

Initial Release:

01/28/98

MSFC 40M38298 Connectors

Circular Connectors, Miniature, Low Outgassing,

Bayonet Coupled, -150deg.C to +200deg.C

APPLICATION NOTES

1) Connectors are supplied with contacts.

2) Temperature range for hermetically sealed connectors is -100deg.C to +150deg.C.

3) When styles 6, 6G and 7 are used in space shuttle missions, only polarization N, A, B, C, D shall be used.

4) For style 6, 6G and 7 procure strain relief backshell separately.

5) When styles 9 and 9G, are used in space shuttle missions, insert arrangement 8-2 with socket contacts and E, F, G H polarization shall be reserved for connection to NSI-1 (NASA standard initiator Type 1) pyrotechnic firing circuits.

6) Crimp type ferrule is required to terminate cable shield to the backshell and must be provided separately. Order Thomas Betts P/N GSC 17512NP or equivalent.

7) Insert arrangement designation consists of shell size and arrangement number. For 40M38298 connectors, all contacts are size 20.

Recent NASA Parts Selection List Updates for

MSFC 40M38298 Connectors

01/28/98	Initial Release of MSFC 40M38298 Connector Section in the NPSL On-Line

MSFC 40M38298 Connectors

Circular Connectors, Miniature, Low Outgassing,

Bayonet Coupled, -150deg.C to +200deg.C

Part Number Ordering Information:

Example of P/N: NBS6E8-2PN, where

NBS	6	E	8	-2	P	N
Series Prefix	Shell Style	Class (Seal)	Shell Size	Arrangement Number	Contact Type	Insert Polarization

Shell Style Designator	Description
0	Receptacle, Flange Mount
3	Receptacle, Solder Mount, Hermetic
5	Bulkhead Feed Thru, Hermetic, Jam Nut Mount (Double Sided Connector)
6	Plug, Cable Mount
6G	Plug, Cable Mount with RFI Grounding Fingers
6W	Plug, Cable Mount, without Coupling Ring & Backshell
7	Receptacle, Jam Nut Mount

Class (Seal) Designator	Description
E	Environmental
H	Hermetic

Contact Type Designator	Description
P	Pin
S	Socket

Insert Polarization Designator	Description
N	Normal
A through H	Alternate

Insert Arrangement	Number of Contacts (All Contacts Size 20)
8-2	2

8-3	3
8-4	4

8–2

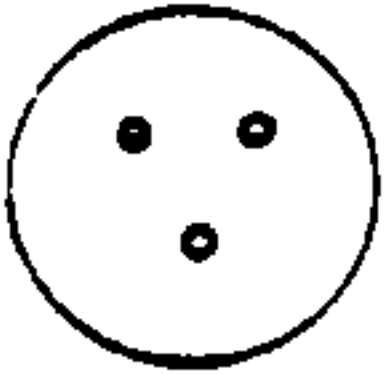

8–3

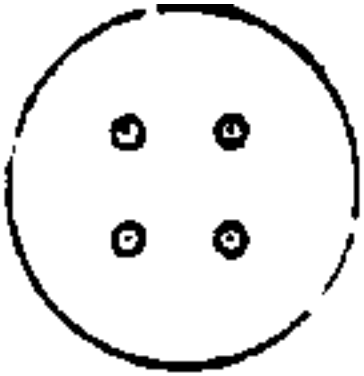

8-4

MSFC 40M38298 Connectors Manufacturer Listing

And Links to Manufacturer Homepages

Click

here

for detailed information regarding part technologies offered by manufacturers listed in the

PSAP

Core Suppliers List

Listed below are links to manufacturer data sites that may provide additional part related information. The linked sites are not under the control of NPSL and NASA is not responsible for information contained in the linked site. We are providing these links for your convenience only.

ITT Cannon

666 East Dyer Rd

Santa Ana, CA 92705

Cage Code: 71468

Tel.: 714-557-4700

Go to -

NEPP

|

NPSL

|

Connectors

MSFC 40M38277 Connectors

Circular Connectors, Low Silhouette, Low Outgassing,

Bayonet Coupled, -150deg.C to +200deg.C

Part Number/Ordering Explanation

Important! Application Notes

Available Sources

Recent NASA Parts Selection List Updates for MSFC 40M38277 Connectors

Initial Release:

01/28/98

MSFC 40M38277 Connectors

Circular Connectors, Low Silhouette, Low Outgassing,

Bayonet Coupled, -150deg.C to +200deg.C

APPLICATION NOTES

1) Connectors are supplied with contacts.

2) Temperature range for hermetically sealed connectors is -100deg.C to +150deg.C.

3) Backshell strain relief must be procured separately for Class T connectors.

4) Insert arrangement designation consists of shell size and arrangement number. For 40M38277 connectors, all contacts are size 22D.

Recent NASA Parts Selection List Updates for

MSFC 40M38277 Connectors

01/28/98	Initial Release of MSFC 40M38277 Connector Section in the NPSL On-Line

MSFC 40M38277 Connectors

Circular Connectors, Low Silhouette, Low Outgassing,

Bayonet Coupled, -150deg.C to +200deg.C

Part Number Ordering Information:

Example of P/N: NLS6E8-35PA, where

NLS	6	E	8	-35	P	A
Series Prefix	Shell Style	Class (Seal)	Shell Size	Arrangement Number	Contact Type	Insert Polarization

Click Here for Part Number Explanation on Backshells for Class T Connectors (Only)

Shell Style Designator	Description
0	Receptacle, Flange Mount
3	Receptacle, Solder Mount, Hermetic
5	Bulkhead Feed Thru, Hermetic, Jam Nut Mount (Double Sided Connector)
6	Plug, Cable Mount
6G	Plug, Cable Mount with RFI Grounding Fingers
6W	Plug, Cable Mount, without Coupling Ring & Backshell
7	Receptacle, Jam Nut Mount

Class (Seal) Designator	Description
E	Environmental
H	Hermetic
T	Environmental without Backshell

Contact Type Designator	Description
P	Pin
S	Socket
PS	Pin Socket Feed Thru (Shell Style 5 Only)

Insert Polarization Designator	Description
Blank	Normal
A through D	Alternate Position

Insert Arrangement Click Here to See Insert Arrangements	Number of Contacts (All Contacts Size 22D)
8-35	6
10-35	13
12-35	22
14-35	37
16-35	55
18-35	66
20-35	79
22-35	100
24-35	128

Part Number Explanation for Backshells for 40M38277 Class T Connectors Only

Example of P/N: NLSRFI86, where

NLS	RFI	8	6
Series Prefix	Style	Shell Size (Size 8 thru 24)	Clamp Size 1 thru 16 (Style RFI Only)

Backshell Style Designator	Description
S	Straight with Strain Relief Clamp
R	Right Angle with Strain Relief Clamp
C	Straight Compression Ring
SCT	Straight with Cable Tie Strain Relief
RCT	Right Angle with Cable Tie Strain Relief
FCT	45deg. Angle with Cable Tie Strain Relief
RFI	Straight RFI shield termination

8-35

10-35

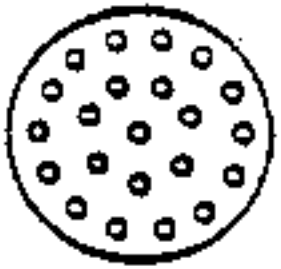

12-35

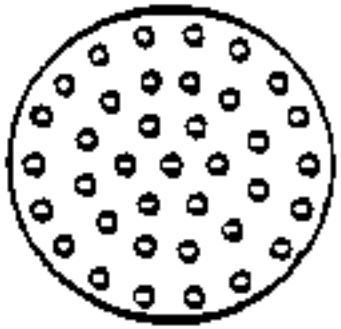

14-35

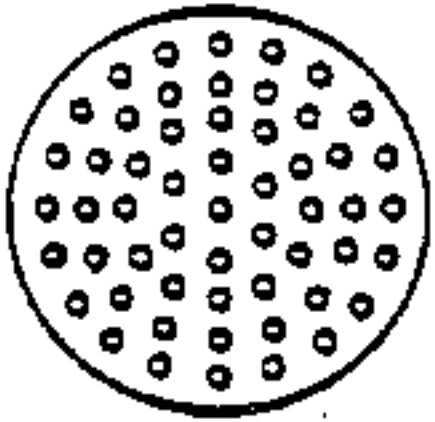

16–35

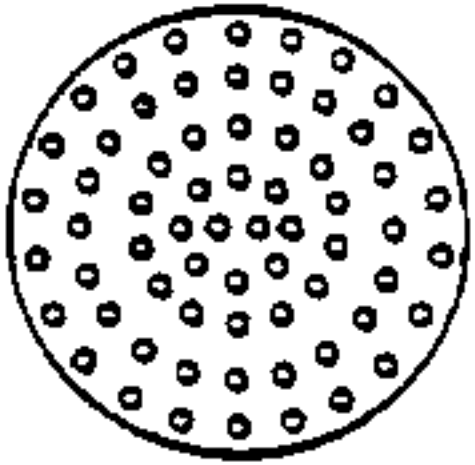

18–35

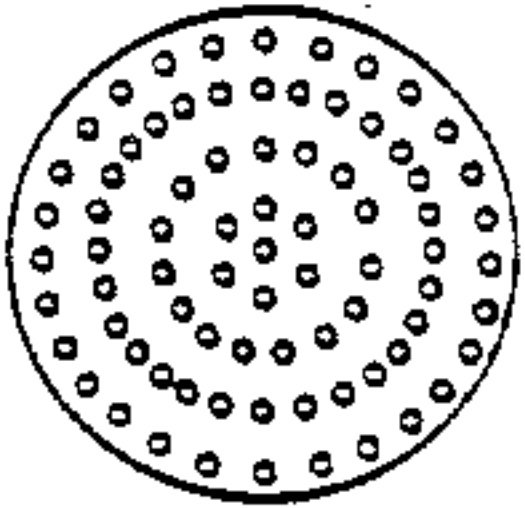

20–35

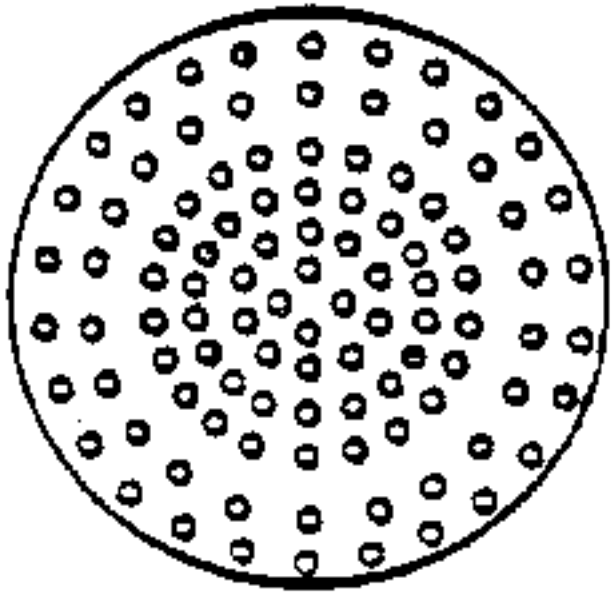

22-35

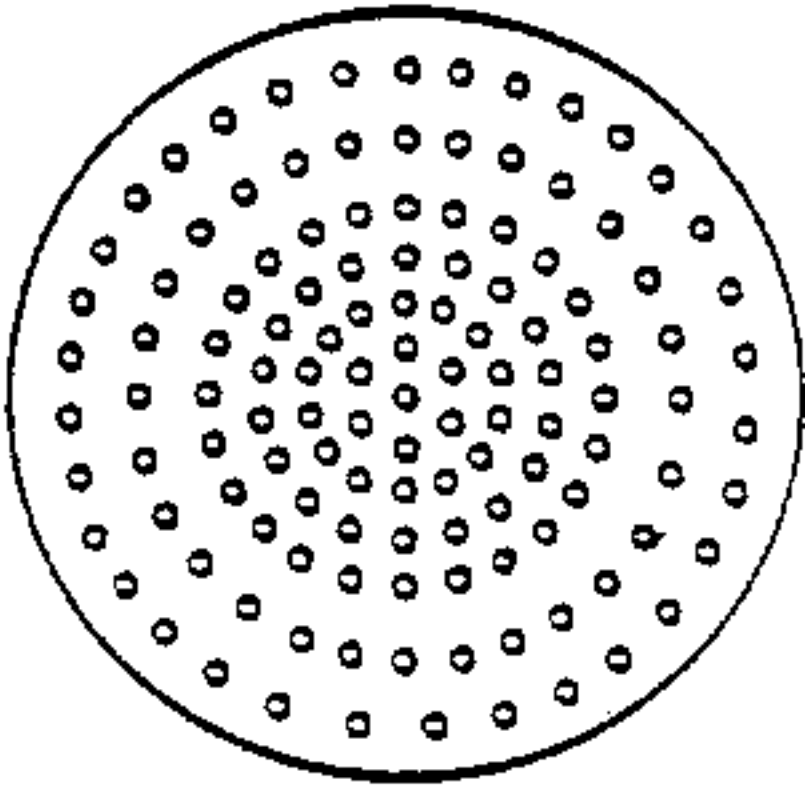

24-35

MSFC 40M38277 Connectors Manufacturer Listing

And Links to Manufacturer Homepages

Click

here

for detailed information regarding part technologies offered by manufacturers listed in the

PSAP

Core Suppliers List

Listed below are links to manufacturer data sites that may provide additional part related information. The linked sites are not under the control of NPSL and NASA is not responsible for information contained in the linked site. We are providing these links for your convenience only.

Amphenol Aerospace - Amphenol Connectors (Formerly Bendix)
40-60 Deleware Avenue
Sidney, NY 13838
Cage Code: 77820
Tel.: 607-563-5011
Glenair, Inc.
(Backshells Only)
1211 Air Way
Glen Dale CA 91201
Cage Code: 06324
Tel.: 818-247-6000
ITT Cannon
666 East Dyer Rd
Santa Ana, CA 92705
Cage Code: 71468
Tel.: 714-557-4700
Revision History for NASA Parts Selection List for MIL-DTL-38999

02/29/00	Changed specification reference to "MIL-DTL-38999" from "MIL-C-38999" throughout this section
12/09/97	Initial Release on MIL-DTL-38999 Section in the NPSL

MIL-DTL-38999 Connectors Series I II,
Circular Connectors, Bayonet Coupled, -65deg.C to +200deg.C
Part Number Ordering Information:

MS27XXX	X	X	X	XX	X	X
Military Specification Number	Class	Shell Size	Finish	Arrangement Number	Contact Type	Insert Polarization

		MILITARY SPECIFICATION NUMBER AND STYLE
Series I Scoop-Proof	Series II Low Silhouette	Style Description
MS27466	MS27472	Receptacle, Wall Mount Flange
MS27468	MS27474	Receptacle, Jam Nut Mount
MS27656	MS27497	Receptacle, Wall Mount, Back Panel Mount
--	MS27508	Receptacle, Box Mount, Back Panel Mount
--	MS27473	Plug
MS27467	MS27484	Plug with RFI Grounding Fingers
MS27470	MS27477	Receptacle, Jam Nut Mount, Hermetic
MS27471	MS27478	Receptacle, Solder Mount, Hermetic

CLASS DESCRIPTION	T = Environmental Without Backshell

E = Environmental Resisting (MS27508 Only)

Y = Hermetic

CONTACT TYPE
P = Pin
S = Socket
Y = Hermetic Pins with Eyelet
Z = Hermetic Sockets with Eyelet

INSERT POLARIZATION
Blank = Normal
A, B, C, D = Alternate Positions

FINISH (Preferred)

Class T, E
F = Electroless Nickel

Class Y
D = Tin (150deg.C)
E = Passivated Stainless Steel

					INSERT ARRANGEMENT
	Designation (First Digit Designates Shell Size/Subsequent Digits Desginate Contact Arrangement)				No. of Contacts (By Contact Size)
Series I	Series II	22D	20	16	12
					Shell Sizes 8 and 9 (Click to See Insert Arrangements)
9-35	8-35	6	-	-	-
9-98	8-98	-	3	-	-
					Shell Sizes 10 and 11 (Click to See Insert Arrangements)
11-4	--	-	4	-	-
11-5	10-5	-	5	-	-
11-35	10-35	13	-	-	-
11-98	10-98	-	6	-	-
11-99	10-99	-	7	-	-
					Shell Sizes 12 and 13 (Click to See Insert Arrangements)

--	12-3	-	-	3	-
13-4	12-4	-	-	4	-
13-8	12-8	-	8	-	-
13-35	12-35	22	-	-	-
13-98	12-98	-	10	-	-
					Shell Sizes 14 and 15 (Click to See Insert Arrangements)
15-5	14-5	-	-	5	-
15-15	14-15	-	14	1	-
15-18	14-18	-	18	-	-
15-19	--	-	19	-	-
15-35	14-35	37	-	-	-
15-97	14-97	-	8	4	-
					Shell Sizes 16 and 17 (Click to See Insert Arrangments)
17-6	16-6	-	-	-	6
17-8	16-8	-	-	8	-
17-26	16-26	-	26	-	-
17-35	16-35	55	-	-	-
17-99	16-99	-	21	2	-
					Shell Sizes 18 and 19 (Click to See Insert Arrangements)
19-11	18-11	-	-	11	-
--	18-28	-	26	2	-
--	18-30	-	29	1	-
19-32	18-32	-	32	-	-
19-35	18-35	66	-	-	-
--	18-96	-	-	-	9
					Shell Sizes 20 and 21 (Click to See Insert Arrangements)
21-11	--	-	-	-	11
21-16	20-16	-	-	16	-
21-35	20-35	79	-	-	-
21-39	20-39	-	37	2	-
21-41	20-41	-	41	-	-
					Shell Sizes 22 and 23 (Click to See Insert Arrangments)
23-21	22-21	-	-	21	-
--	22-32	-	32	-	-
23-35	22-35	100	-	-	-
23-53	--	-	53	-	-
23-55	22-55	-	55	-	-
					Shell Sizes 24 and 25 (Click to See Insert Arrangements)
25-4	24-4	-	48	8	-
25-19	24-19	-	-	-	19
25-24	24-24	-	-	12	12
25-29	24-29	-	-	29	-
25-35	24-35	128	-	-	-
25-43	--	-	23	20	-
25-61	24-61	-	61	-	-

Go to -

NEPP

|

NPSL

|

Connectors

MIL-DTL-38999 Connectors Series I II

Circular Connectors, Bayonet Coupled, -65deg.C to +200deg.C

Part Number/Ordering Explanation

Important! Application Notes

Available Sources

Revision History for NASA Parts Selection List for MIL-DTL-38999 Series I II

Last Update: 02/29/00

MIL-DTL-38999 Connectors Series I II

Circular Connectors, Bayonet Coupled

APPLICATION NOTES

1) Specify Class T for all types except for hermetic and MS27508 connectors. Specify Class E for MS27508 connectors only. Class E is not preferred for all other specifications and is inactive for new design.

2) In applications where contamination control is critical, military connectors require additional processing for contamination control due to outgassing. Processing generally consists of a bakeout of 125deg.C and some level of vacuum. A vacuum level of at least 10**-6 torr is preferred. Processing should also include removal of lubricant and replacement with a low outgassing lubricant such as Apiezon-M (manufactured by Metropolitan-Vickers). Removal of ink color bands on contacts may also be required. Some military QPL suppliers offer special low outgassing connectors under commercial part numbers.

3) Connectors may be used in Level 1 and 2 applications.

4) Accessories such as strain relief backshells and seal plugs must be provided separately. Refer to MIL-C-85049 for a selection list of backshells. Use of MS27488 seal plugs in unused contact cavities is recommended.

5) Series I, II, III and IV connectors are not intermateable.

6) Connectors are supplied with contacts. Refer to MIL-C-39029 for a selection of replacement contact part numbers.

7) Consult the latest MIL-DTL-38999 Qualified Products List (QPL) for availability. Other insert arrangements are available but are not preferred due to limited availability.

8) Insert arrangement designation consists of shell size and arrangement number. Inserts with a variety of contact sizes are available. For Series I connectors, the shell sizes are specified by odd numbers. For Series II connectors, the shell sizes are specified by even numbers.

Revision History for NASA Parts Selection List MIL-DTL-38999 Series I II Connectors

02/29/00	Changed All specification references to "MIL-DTL-38999" from "MIL-C-38999"
12/07/97	Initial Release.

MIL-DTL-38999 Connectors Series III IV,

Circular Connectors, -65deg.C to +200deg.C

Part Number Ordering Information:

D38999	/XX	X	X	XX	X	X

Military Specification Number	Specification Slash Sheet	Class	Shell Size	Arrangement Number	Contact Type	Insert Polarization

		MILITARY SPECIFICATION NUMBER AND STYLE
Series III Scoop-Proof 3 Way Self Locking Threaded Coupling	Series IV Scoop Proof Breech Coupling	Style Description
D38999/20	D38999/40	Receptacle, Wall Mount Flange
D38999/24	D38999/44	Receptacle, Jam Nut Mount
-	D38999/42	Receptacle, Box Mount
-	D38999/47	Plug
D38999/26	D38999/46	Plug, EMI Grounding Fingers
D38999/21	D38999/41	Receptacle, Box Mount, Hermetic
D38999/23	D38999/43	Receptacle, Jam Nut Mount, Hermetic
D38999/25	D38999/45	Receptacle, Solder Mount, Hermetic
D38999/27	D38999/48	Receptacle, Weld Mount, Hermetic

CLASS DESCRIPTION
F = Environment Resisting, Conductive Electroless Nickel Coating
N = Hermetically Sealed, Corrosion Resistant Steel, Conductive Electro-Deposited Nickel Finish
Y = Hermetically Sealed, Corrosion Resistant Steel, Conductive Passivated Finish

CONTACT TYPE
P = Pin
S = Socket
Y = Hermetic Pins with Eyelet
Z = Hermetic Sockets with Eyelet

INSERT POLARIZATION
Blank = Normal
A, B, C, D = Alternate Positions

	SHELL SIZE
Designator	Shell Size
A	9
B	11
C	13
D	15
E	17
F	19

G	21
H	23
J	25

SHELL SIZE AND INSERT ARRANGEMENT COMBINATIONS

Designation (Letter Indicates Shell Size/Number Indicates Arrangement)

No. of Contacts (By Contact Size)

Designator	Series III	Series IV	22D	20	16	12
A35	X	--	6	-	-	-
A98	X	--	-	3	-	-
B4	X	--	-	4	-	-
B5	X	X	-	5	-	-
B35	X	X	13	-	-	-
B98	X	--	-	6	-	-
B99	X	X	-	7	-	-
C4	X	X	-	-	4	-
C8	X	--	-	8	-	-
C35	X	X	22	-	-	-
C98	X	X	-	10	-	-
D5	X	X	-	-	5	-
D15	X	--	-	14	1	-
D18	X	X	-	18	-	-
D19	X	X	-	19	-	-
D35	X	X	37	-	-	-
D97	X	X	-	8	4	-
E6	X	X	-	-	-	6
E8	X	X	-	-	8	-
E26	X	X	-	26	-	-
E35	X	X	55	-	-	-
E99	X	X	-	21	2	-
F11	X	X	-	-	11	-
F32	X	X	-	32	-	-
F35	X	X	66	-	-	-
G11	X	X	-	-	-	11
G16	X	X	-	-	16	-
G35	X	X	79	-	-	-
G39	X	--	-	37	2	-
G41	X	X	-	41	-	-
H21	X	X	-	-	21	-
H35	X	X	100	-	-	-
H53	X	--	-	53	-	-
H55	X	X	-	55	-	-
J4	X	X	-	48	8	-
J19	X	X	-	-	-	19

J24	X	X	-	-	12	12
J29	X	X	-	-	29	-
J35	X	X	128	-	-	-
J43	X	--	-	23	20	-
J61	X	X	-	61	-	-

SHELL INSERT ARRANGEMENT COMBINATIONS
Shell Size F
Shell Size B
Shell Size C
Shell Size D
Shell Size E
Shell Size A
Shell Size G
Shell Size H
Shell Size J

Go to -

NEPP

|

NPSL

|

Connectors

MIL-DTL-38999 Connectors Series III IV

Circular Connectors, -65deg.C to +200deg.C

Part Number/Ordering Explanation

Important! Application Notes

Available Sources

Revision History for NASA Parts Selection List for MIL-DTL-38999 Series III IV

Last Update 02/29/00

MIL-DTL-38999 Connectors Series III IV

Circular Connectors

APPLICATION NOTES

1) In applications where contamination control is critical, military connectors require additional processing for contamination control due to outgassing. Processing generally consists of a bakeout of 125deg.C and some level of vacuum. A vacuum level of at least 10**-6 torr is preferred. Processing should also include removal of lubricant and replacement with a low outgassing lubricant such as Apiezon-M (manufactured by Metropolitan-Vickers). Removal of ink color bands on contacts may also be required. Some military QPL suppliers offer special low outgassing connectors under commercial part numbers.

2) Connectors may be used in Level 1 and 2 applications.

3) Accessories such as strain relief backshells and seal plugs must be provided separately. Refer to MIL-C-85049 for a selection list of backshells. Use of MS27488 seal plugs in unused contact cavities is recommended.

4) Series I, II, III and IV connectors are not intermateable.

5) Connectors are supplied with contacts. Refer to MIL-C-39029 for a selection of replacement contact part numbers.

6) Consult the latest MIL-DTL-38999 Qualified Products List (QPL) for availability. Other insert arrangements are available but are not preferred due to limited availability.

Revision History for NASA Parts Selection List forr MIL-DTL-38999 Series III IV Connectors

02/29/00	Changed specification reference to "MIL-DTL-38999" from "MIL-C-38999" throughout this section
12/09/97	Initial Release

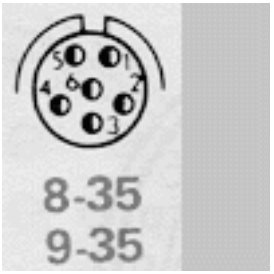

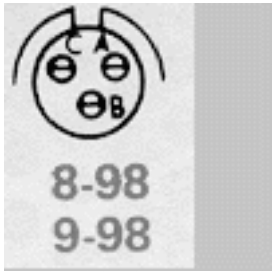

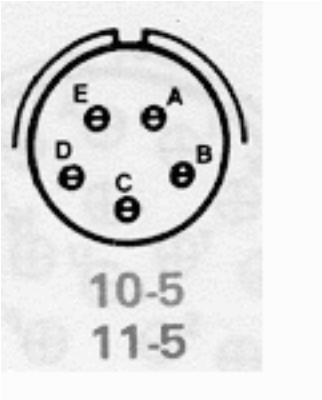
E
A
D
B
C
10-5
11-5

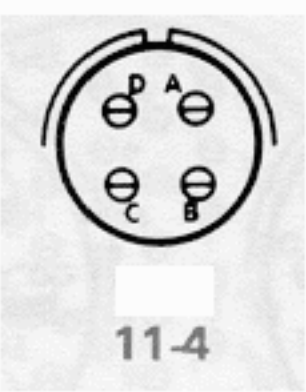
D
A
C
B
11-4

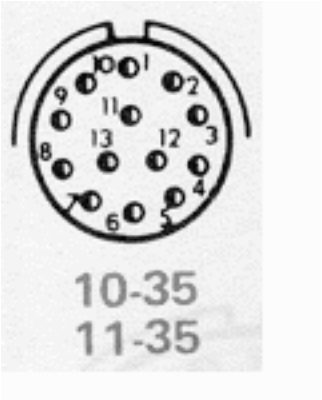
10
1
9
2
11
13
12
3
8
4
7
6
5
10-35
11-35

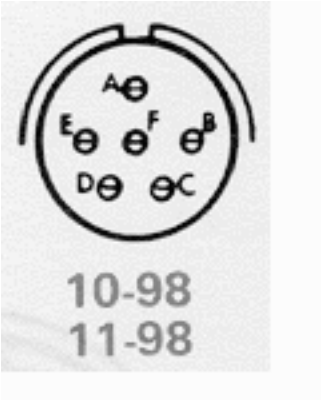
A
E
F
B
D
C
10-98
11-98

F
A
E
G
B
D
C
10-99
11-99

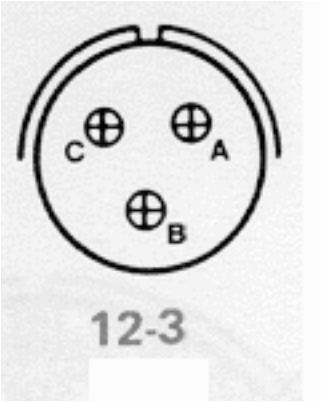
C
A
B
12-3

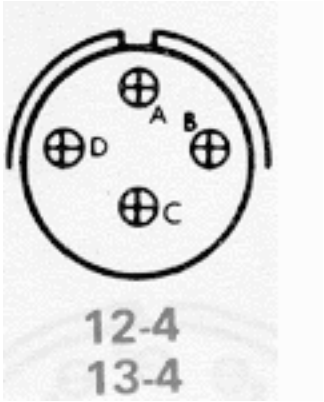
A
B
D
C
12-4
13-4

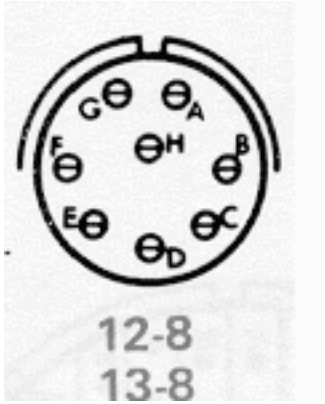
G
A
F
H
B
E
C
D
12-8
13-8

1
22
12-35
13-35

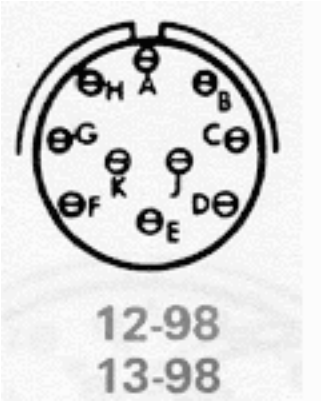
A
B
C
D
E
F
G
H
K
J
12-98
13-98

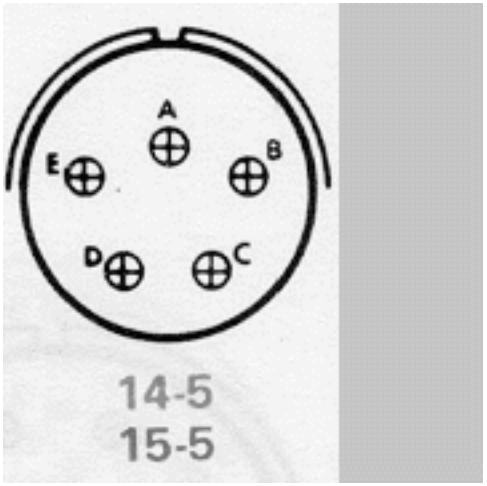
A
B
C
D
E
14-5
15-5

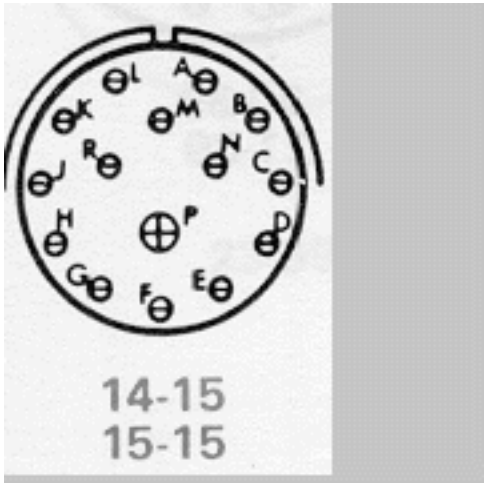
A
B
C
D
E
F
G
H
J
K
L
M
N
P
R
14-15
15-15

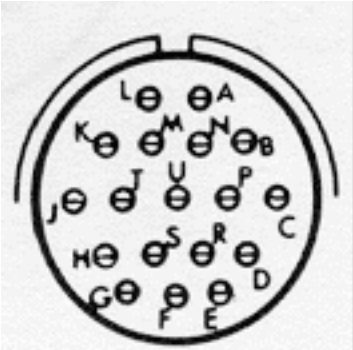

14-18
15-18

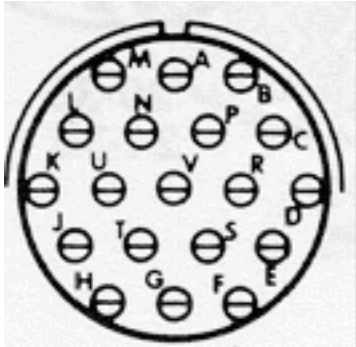

15-19

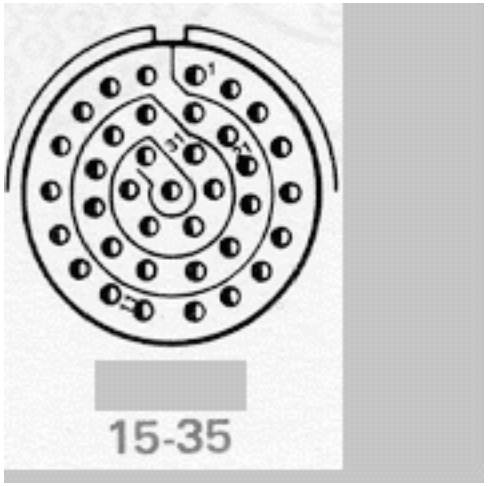
15-35

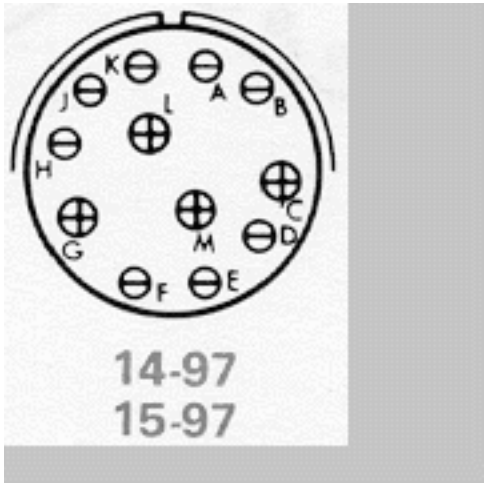
K
A
B
J
L
H
C
G
M
D
F
E
14-97
15-97

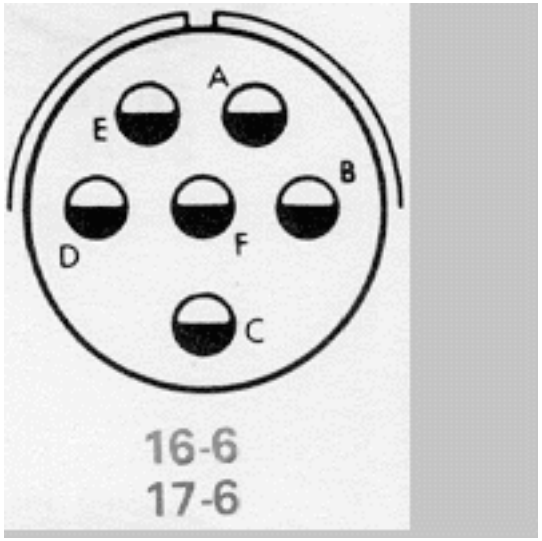
A
E
B
D
F
C
16-6
17-6

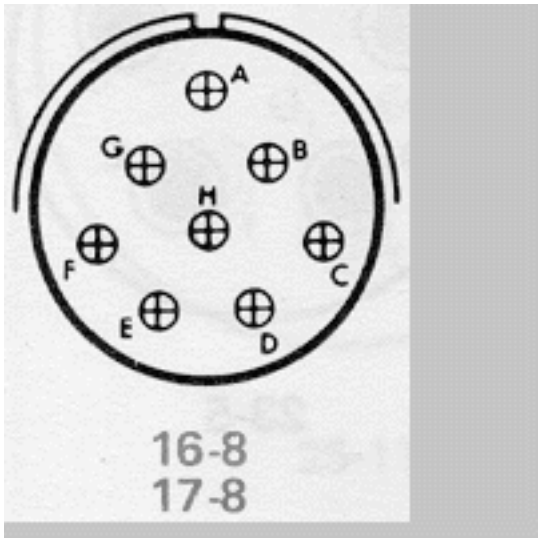
A
G
B
H
F
C
E
D
16-8
17-8

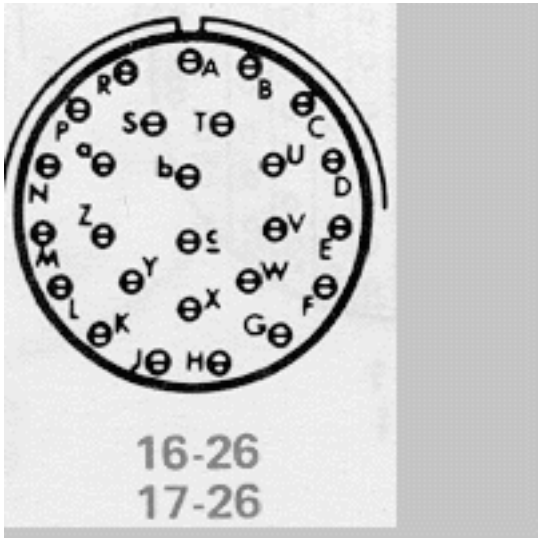
A
B
C
D
E
F
G
H
J
K
L
M
N
P
R
S
T
U
V
W
X
Y
Z
a
b
c
16-26
17-26

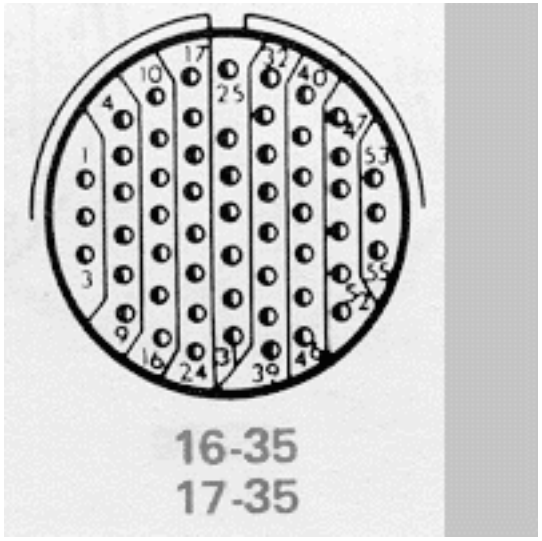
1
3
4
9
10
16
17
24
25
31
32
39
40
47
53
55
56
16-35
17-35

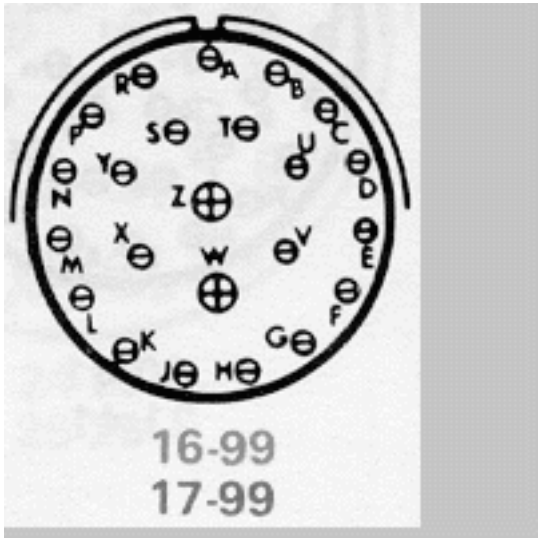
16-99
17-99

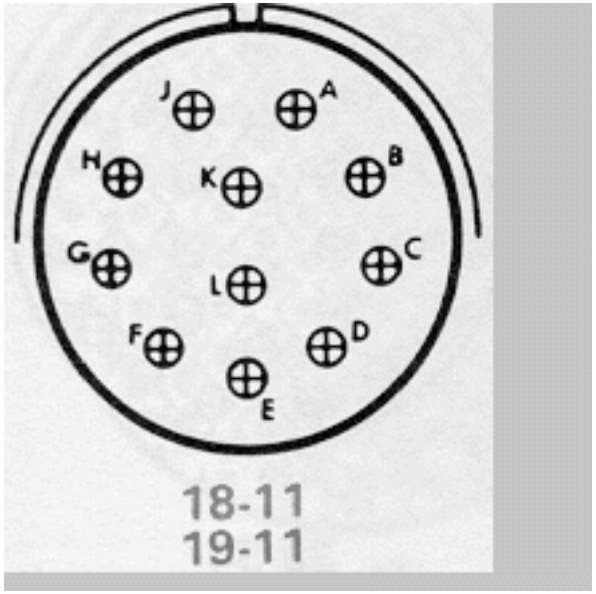
J
A
H
K
B
G
L
C
F
D
E
18-11
19-11

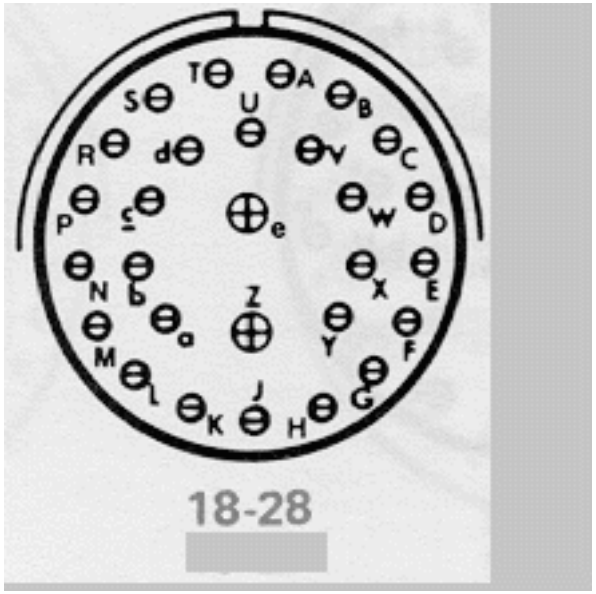
T
A
S
U
B
R
d
v
C
P
c
e
w
D
N
b
X
E
Z
a
Y
F
M
L
J
G
K
H
18-28

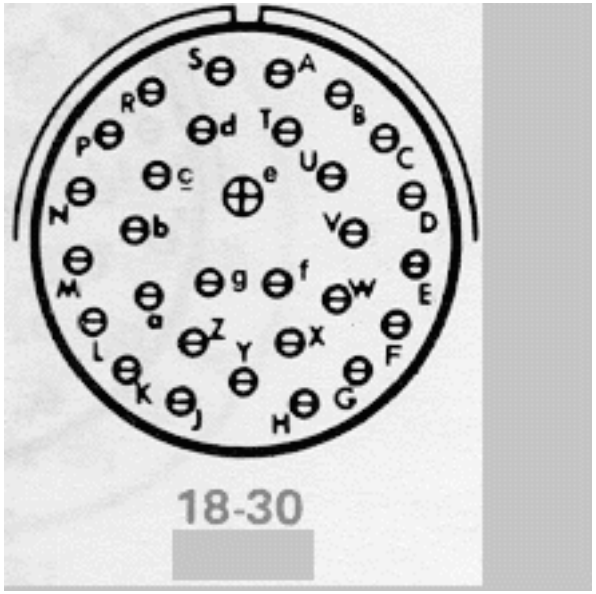
S
A
R
B
P
d
T
C
c
e
U
N
D
b
V
M
g
f
W
E
a
Z
X
L
Y
F
K
J
H
G
18-30

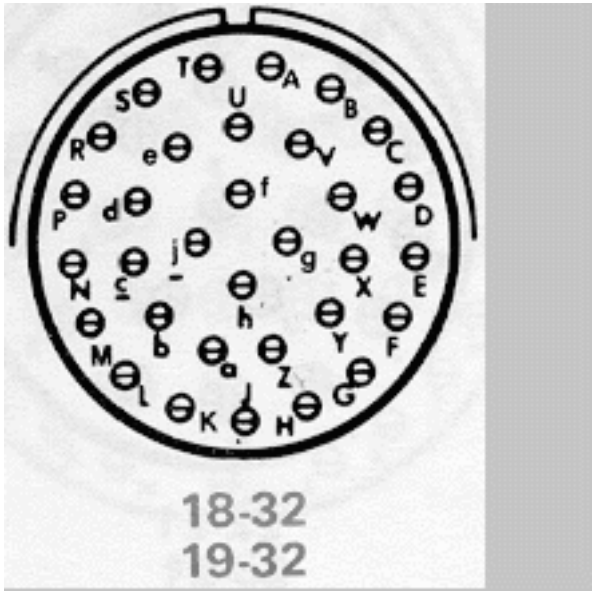
18-32
19-32

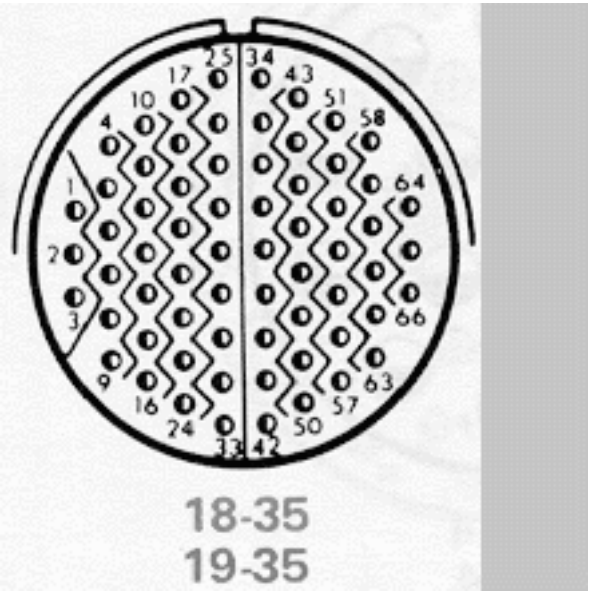
18-35
19-35

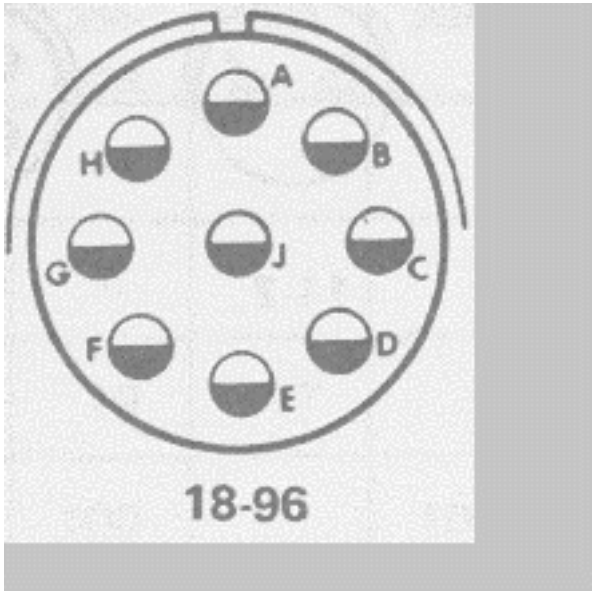
A
B
C
D
E
F
G
H
J
18-96

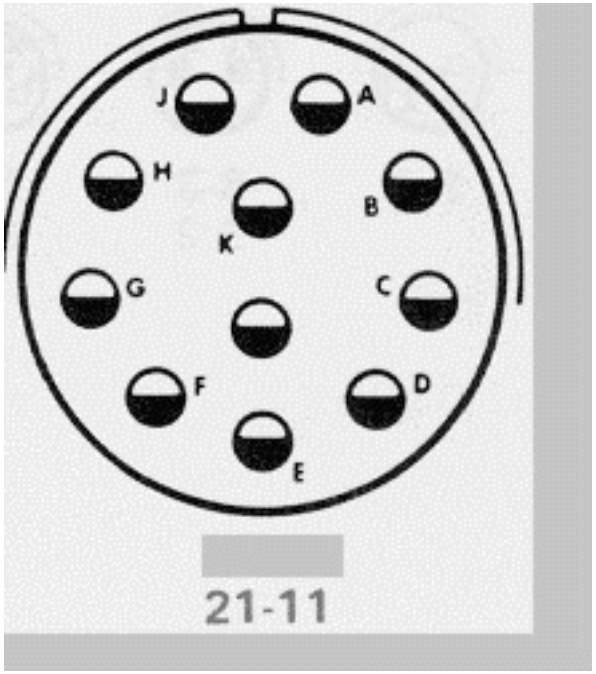
J
A
H
B
K
G
C
F
D
E
21-11

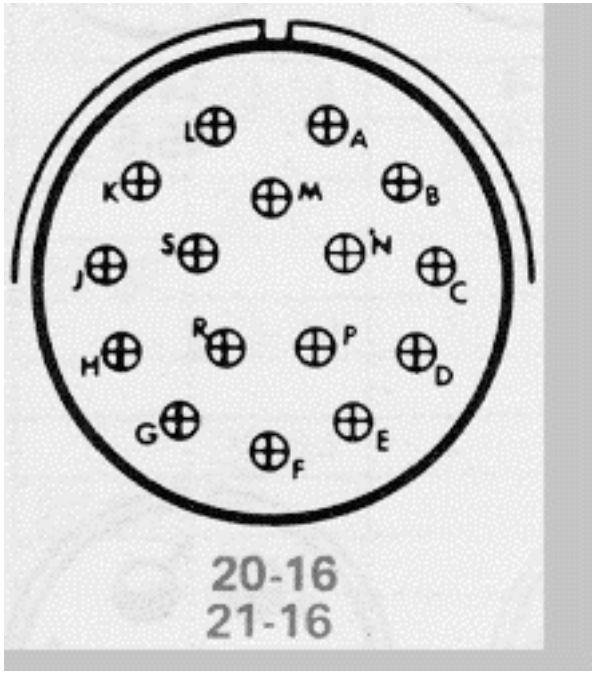
L
A
K
M
B
S
N
J
C
R
P
H
D
G
E
F
20-16
21-16

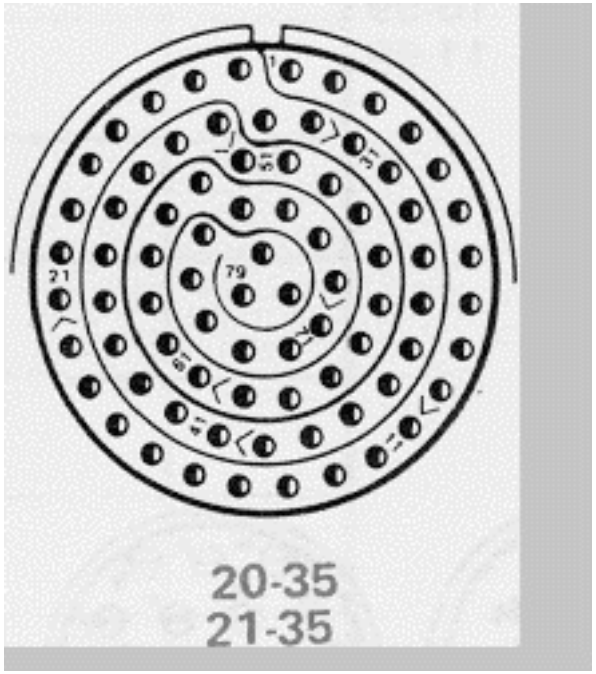
20-35
21-35

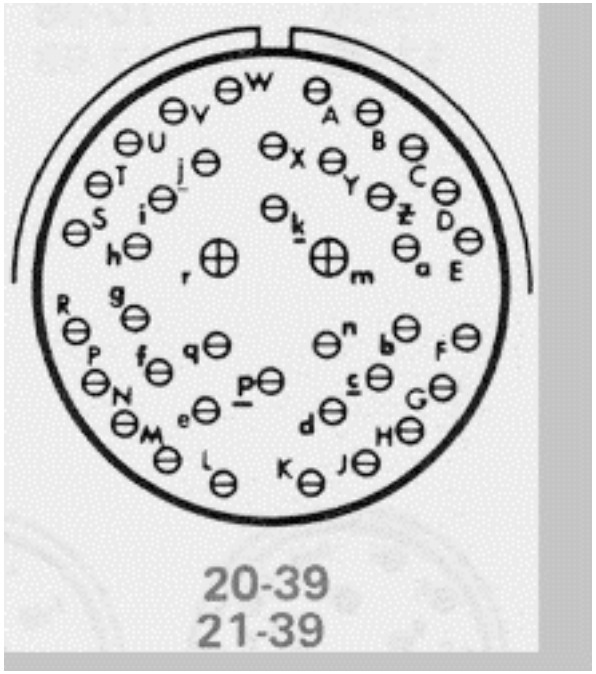
20-39
21-39

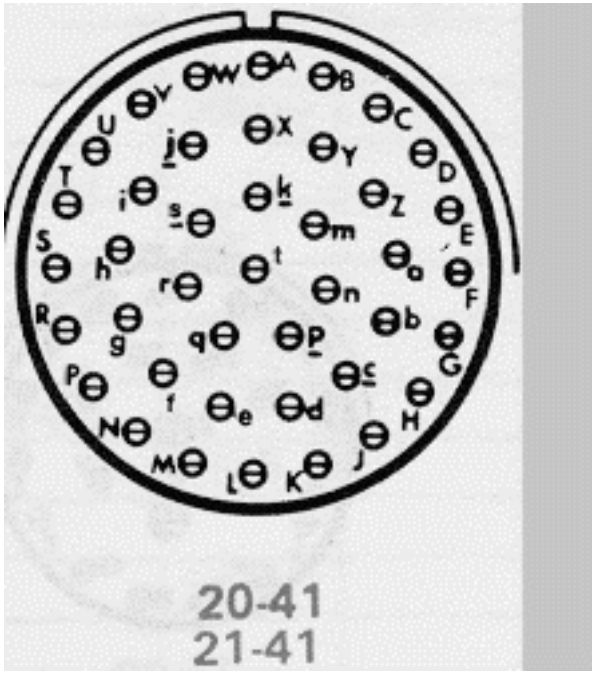
20-41
21-41

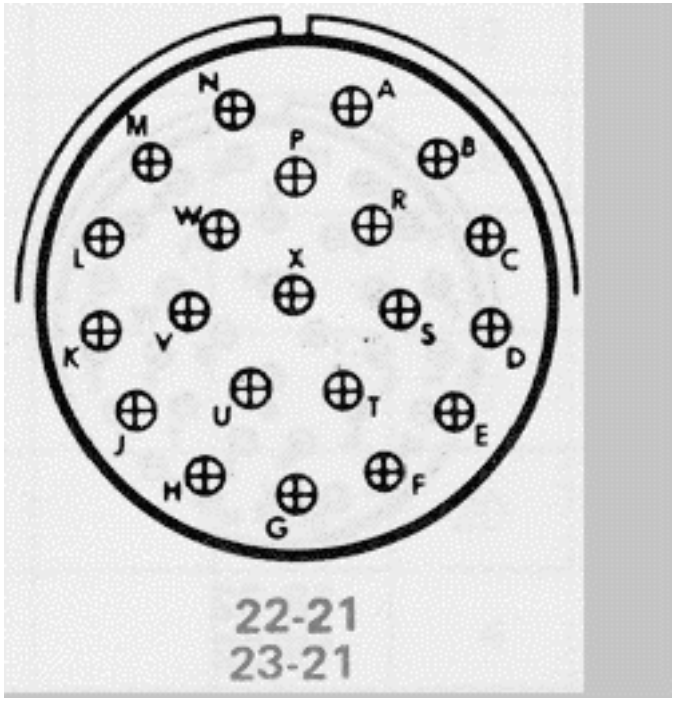
N
A
M
P
B
W
R
L
C
X
K
V
S
D
U
T
J
E
H
F
G
22-21
23-21

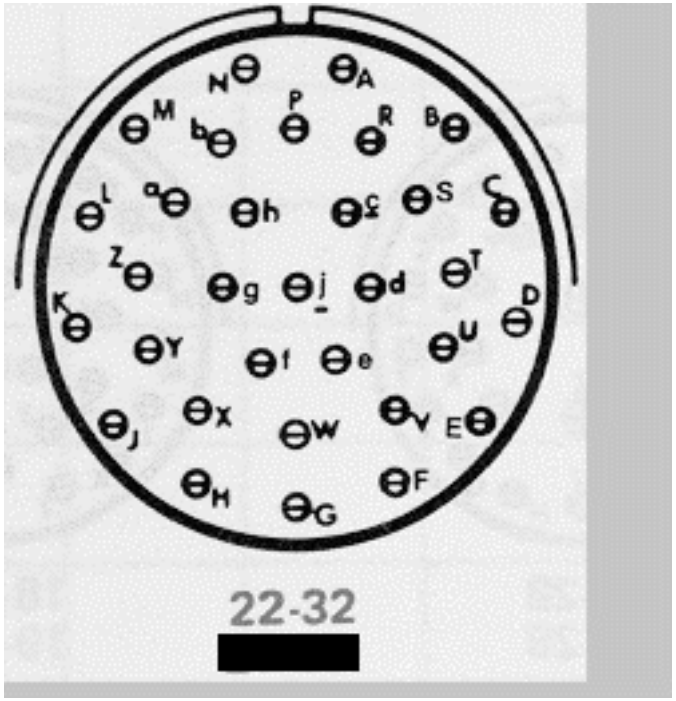
22-32

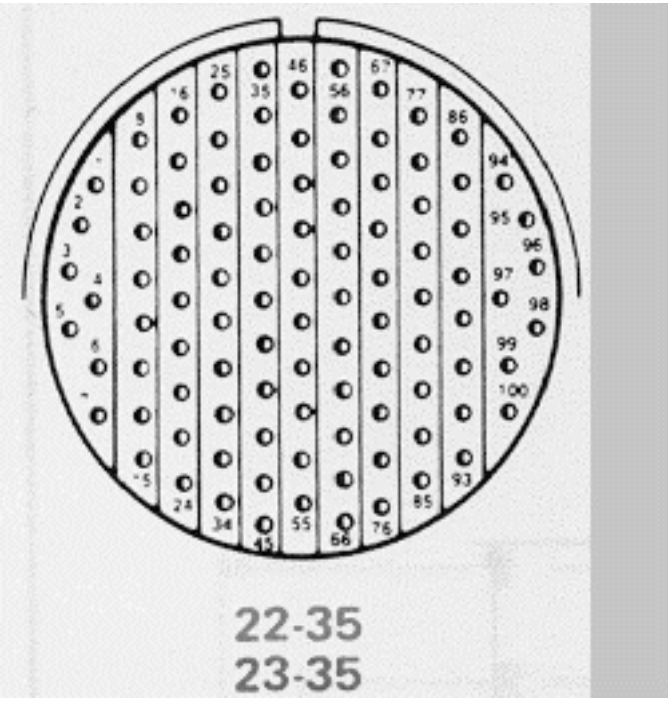
22-35
23-35

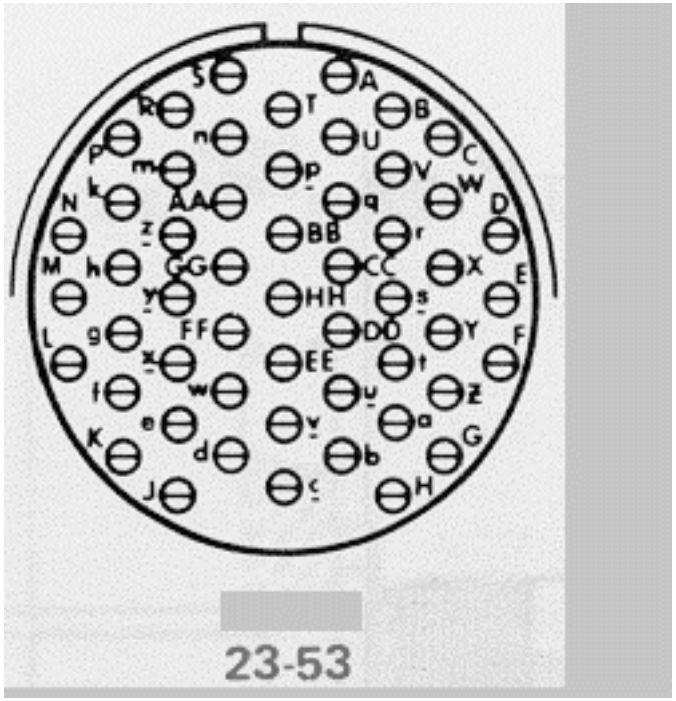
23-53

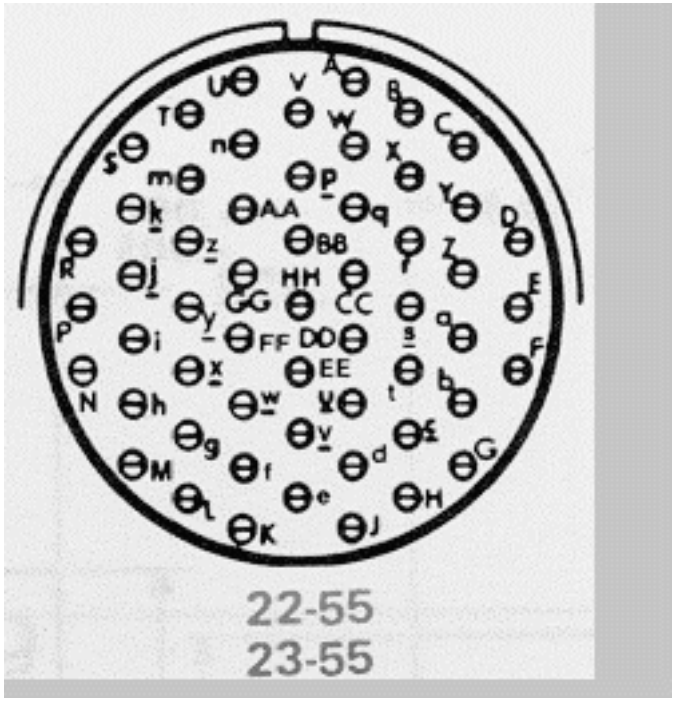
22-55
23-55

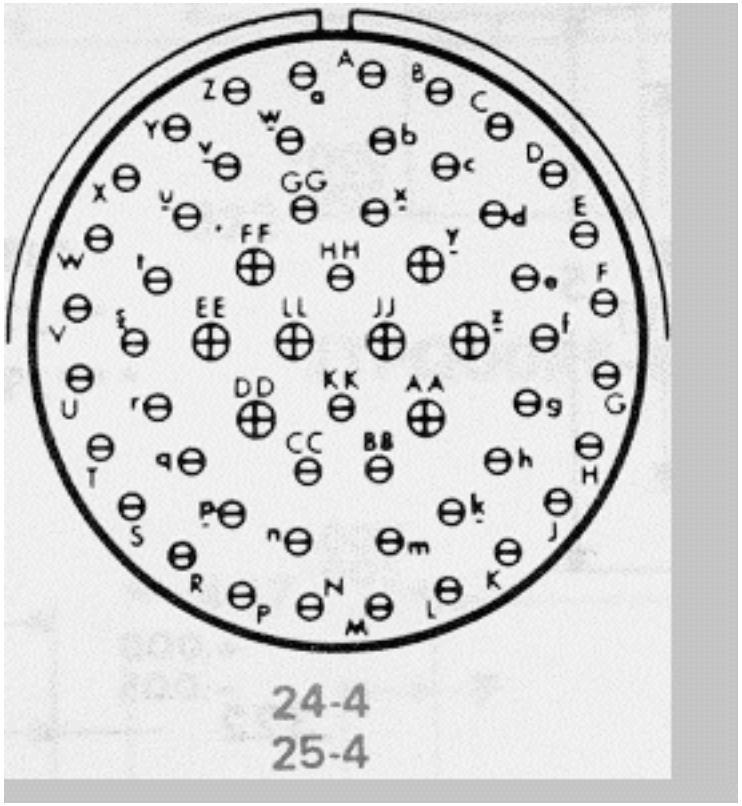
24-4
25-4

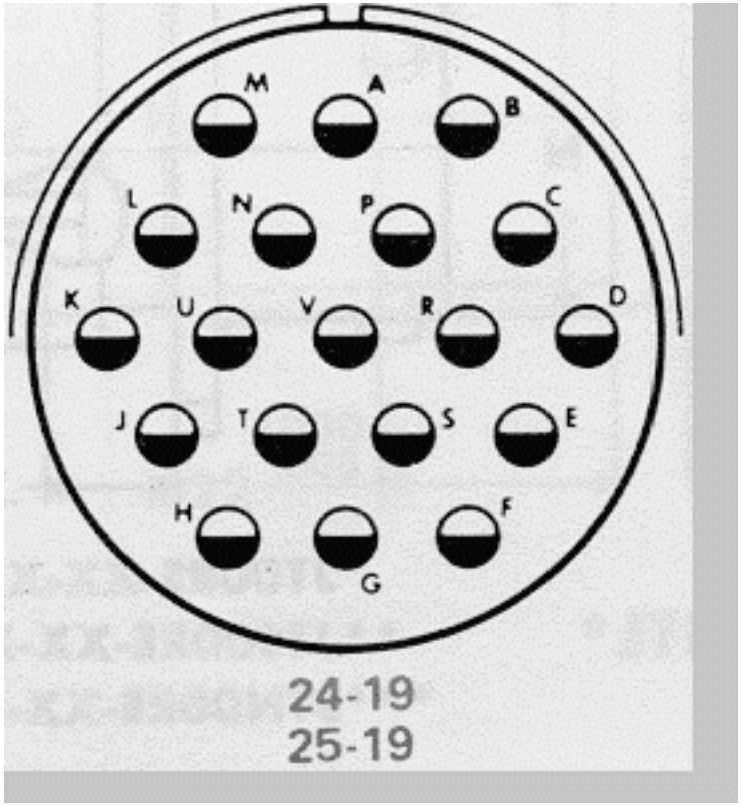
M
A
B
L
N
P
C
K
U
V
R
D
J
T
S
E
H
F
G
24-19
25-19

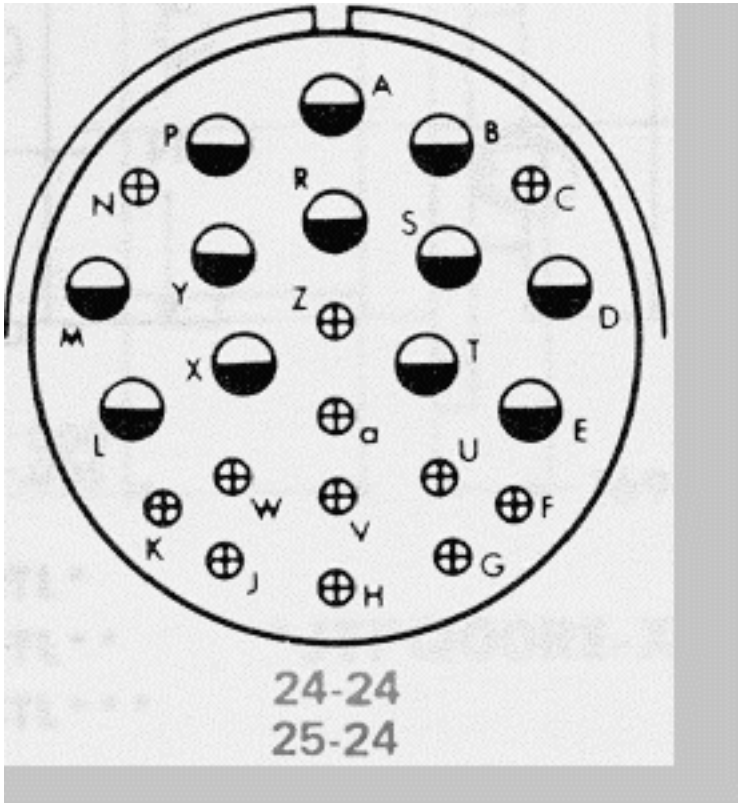
A
B
C
D
E
F
G
H
J
K
L
M
N
P
R
S
T
U
V
W
X
Y
Z
a
24-24
25-24

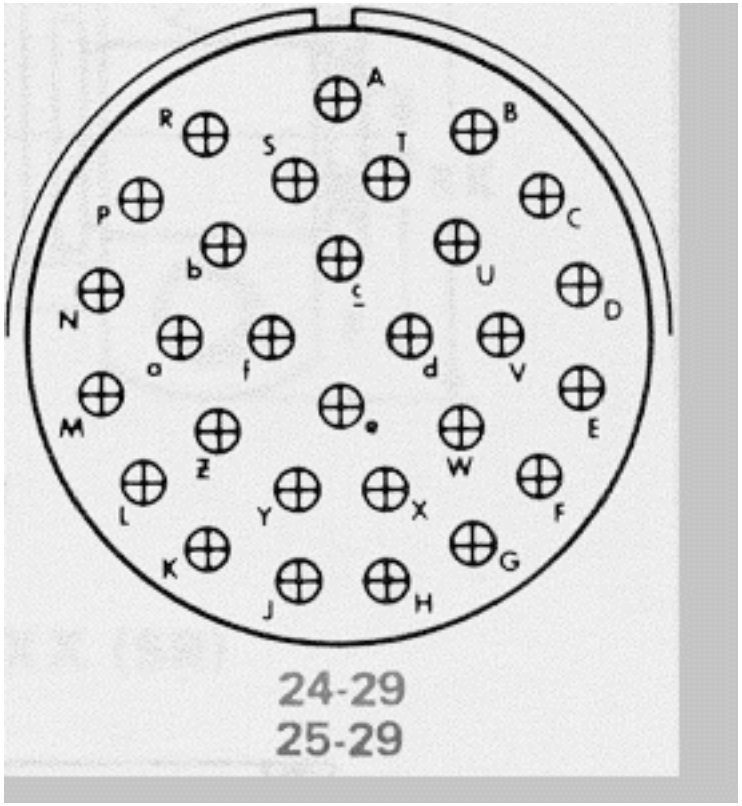
A
B
C
D
E
F
G
H
X
W
V
U
T
S
R
P
N
M
L
K
J
Y
Z
a
b
c
d
e
f
24-29
25-29

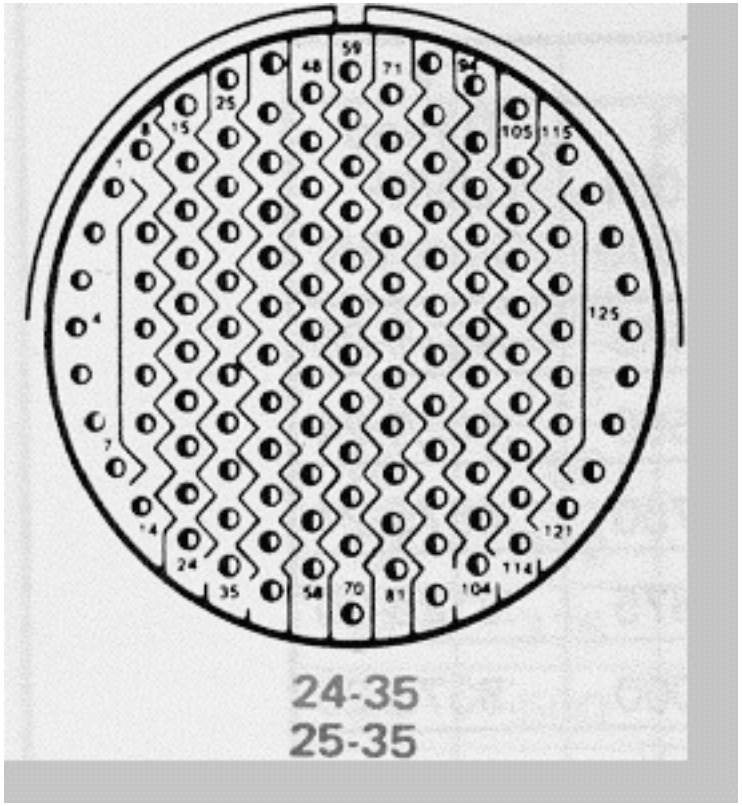
24-35
25-35

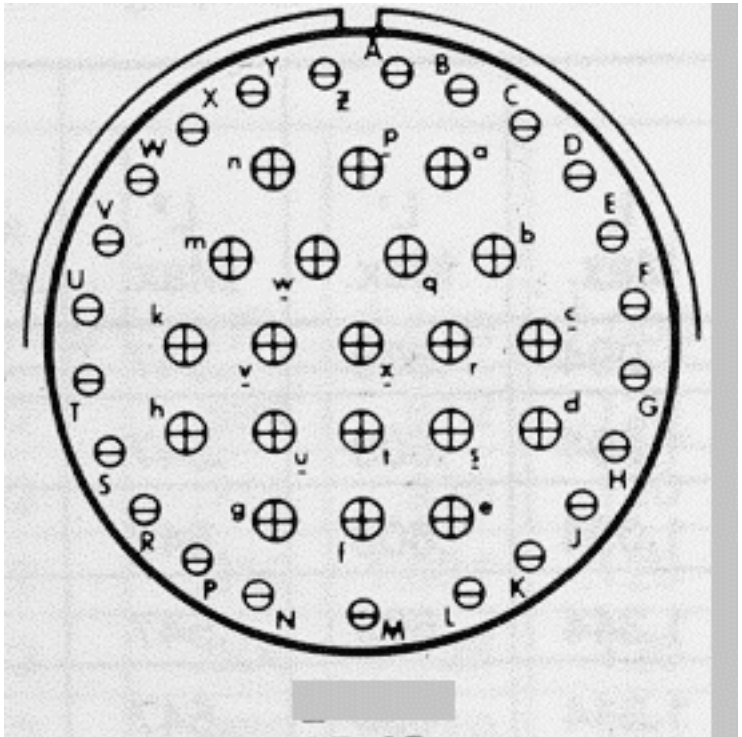

25-43

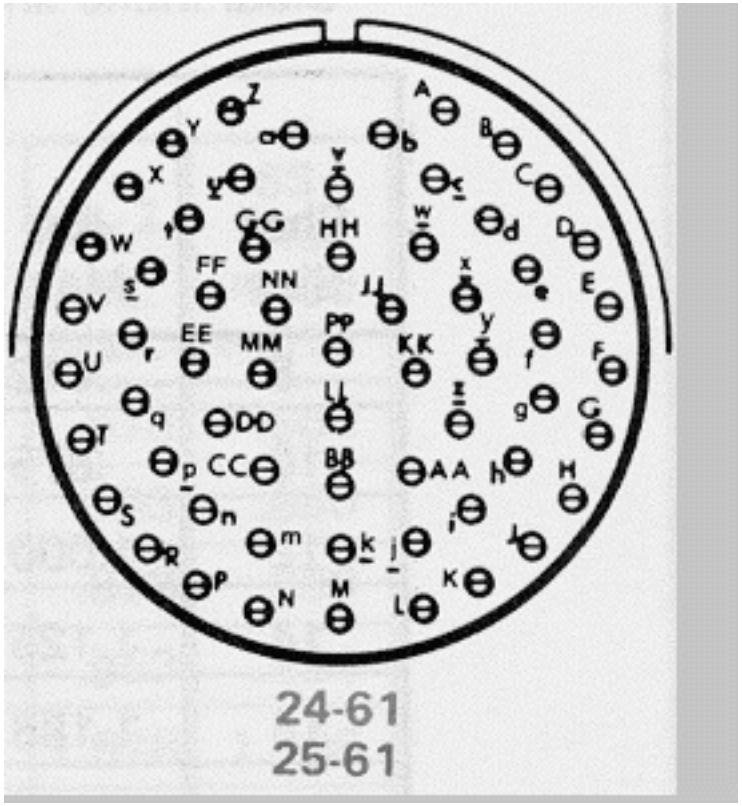
24-61
25-61

A35

A98

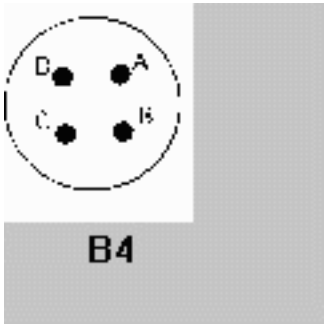
D
A
C
B
B4

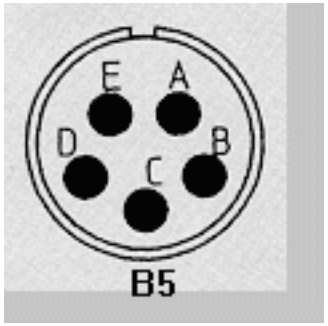
E
A
D
B
C
B5

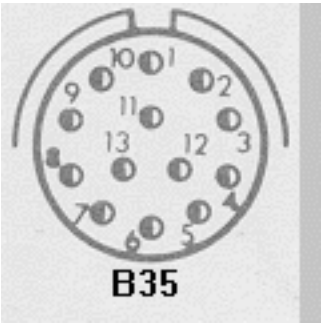
10
1
9
2
11
13
12
3
8
4
7
6
5
B35

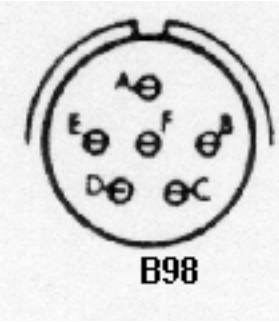
A
E
F
B
D
C
B98

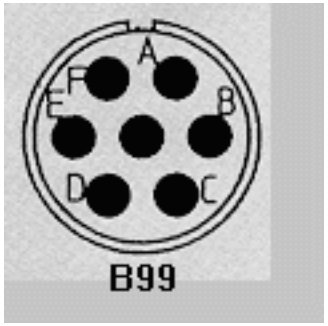
A
F
E
B
D
C
B99

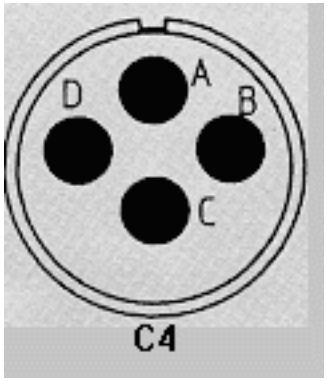
A
D
B
C
C4

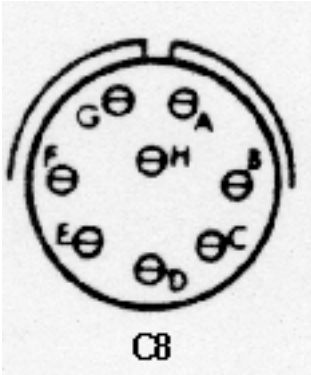
G
A
F
H
B
E
C
D
C8

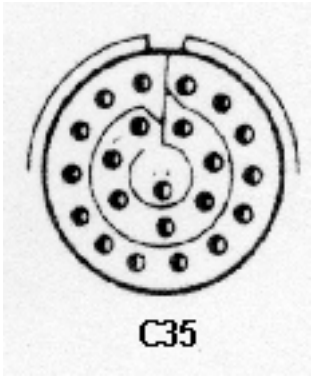
C35

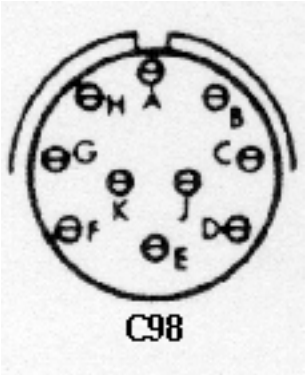

C98

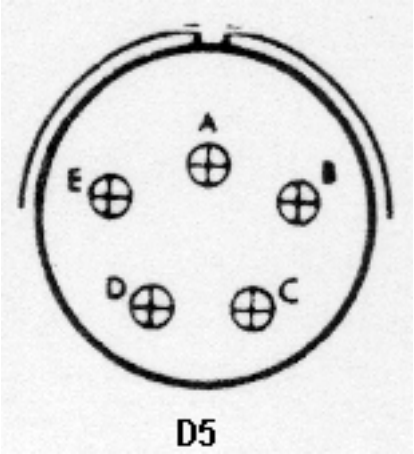

D5

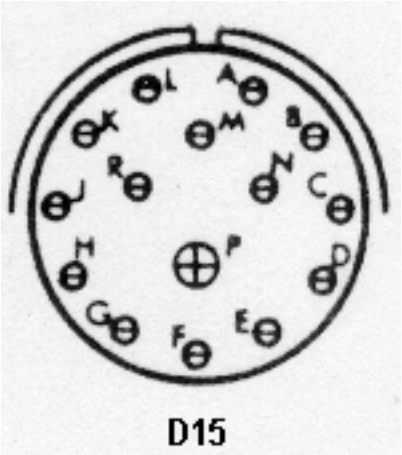

D15

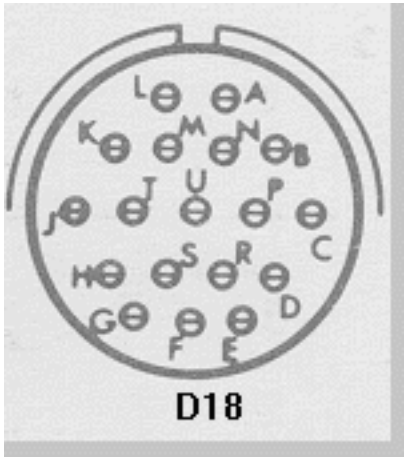

D18

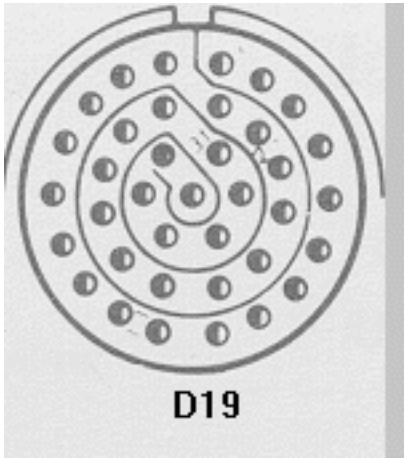
D19

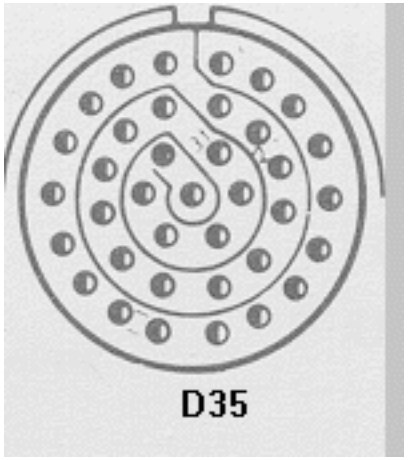
D35

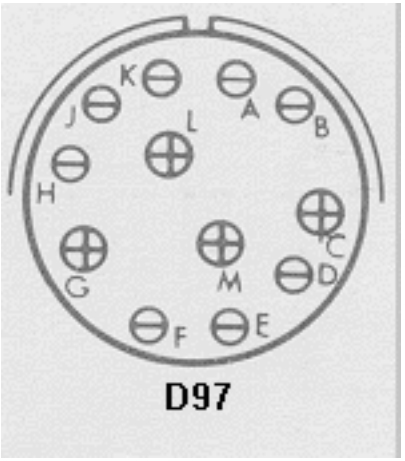

D97

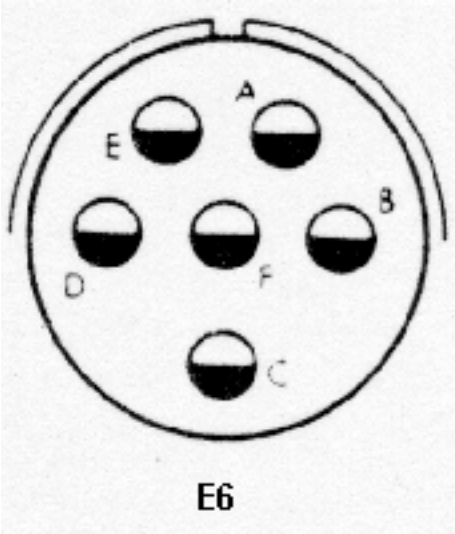

E6

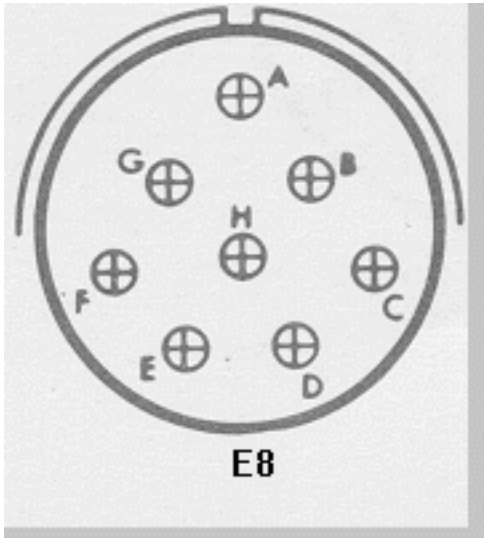

E8

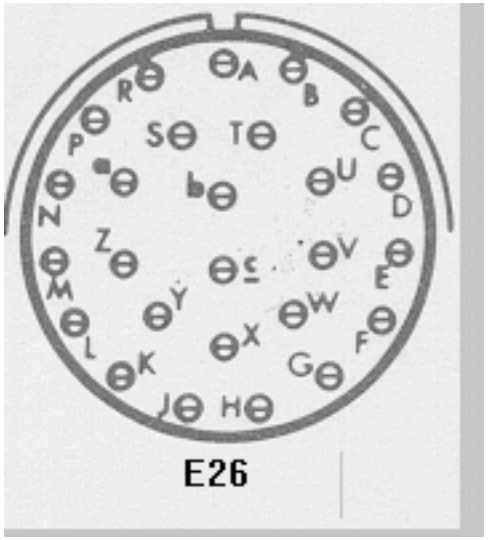

E26

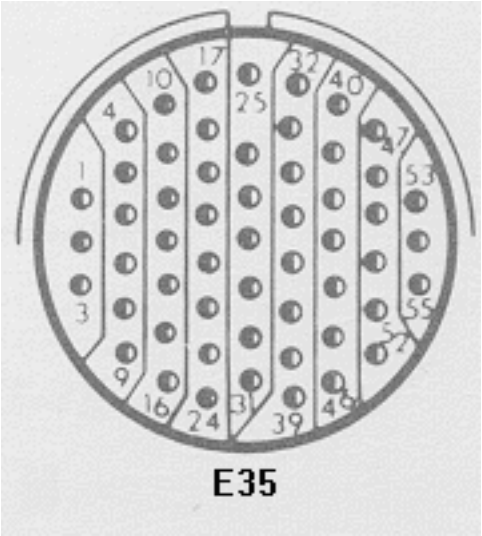
1
3
4
9
10
16
17
24
25
31
32
39
40
46
47
53
55
57

E35

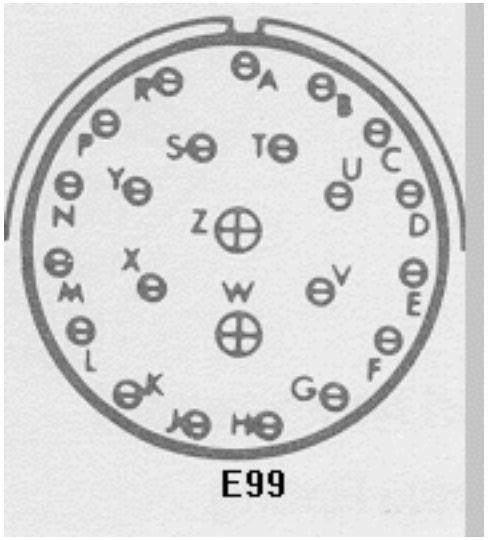
A
B
C
D
E
F
G
H
J
K
L
M
N
P
R
S
T
U
V
W
X
Y
Z

E99

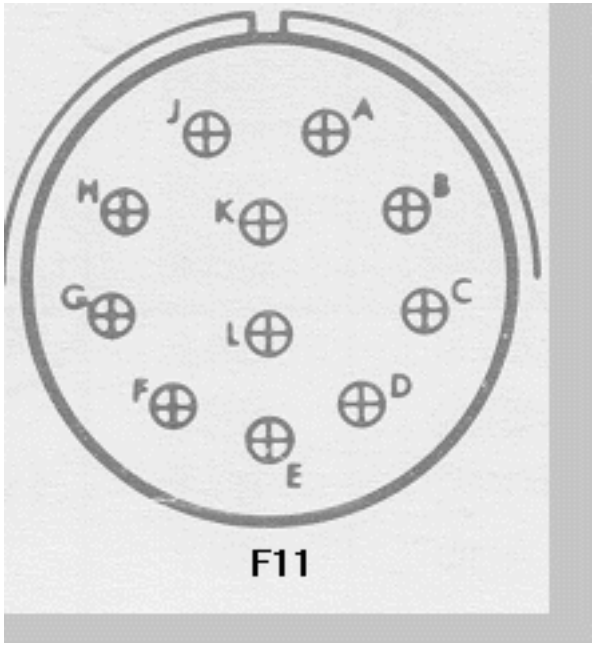
J
A
H
K
B
G
L
C
F
D
E
F11

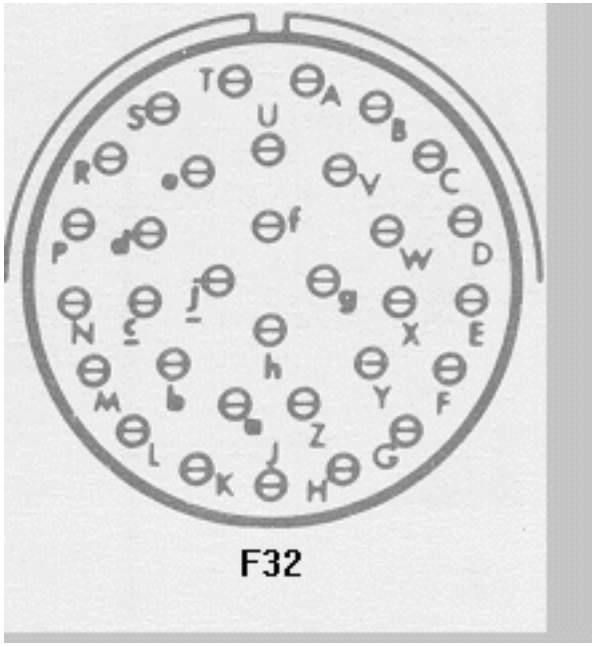

F32

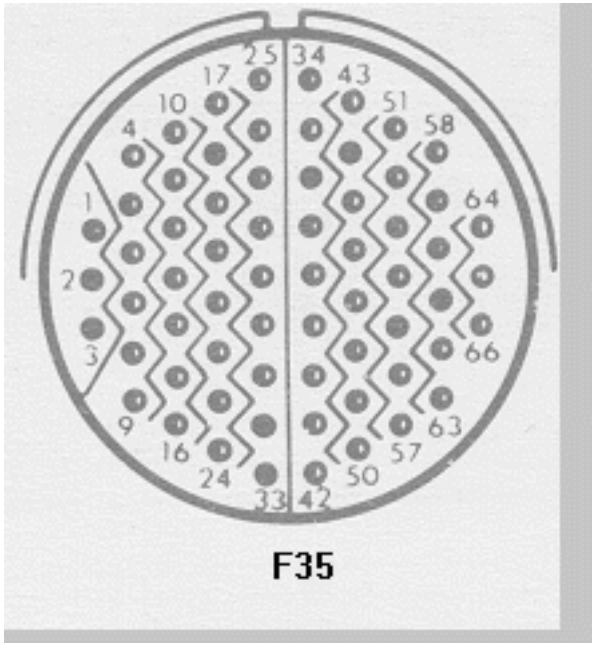
25
34
17
43
10
51
4
58
1
64
2
3
66
9
63
16
57
24
50
33
42
F35

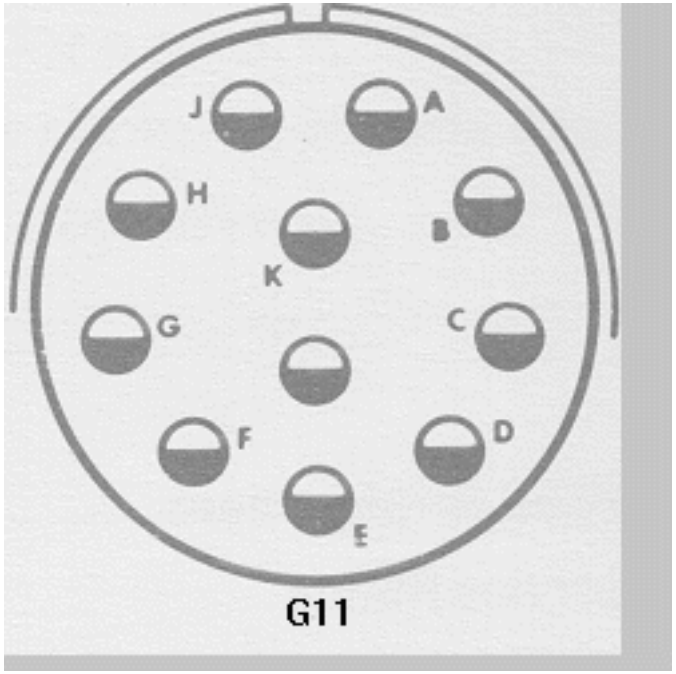
J
A
H
B
K
G
C
F
D
E
G11

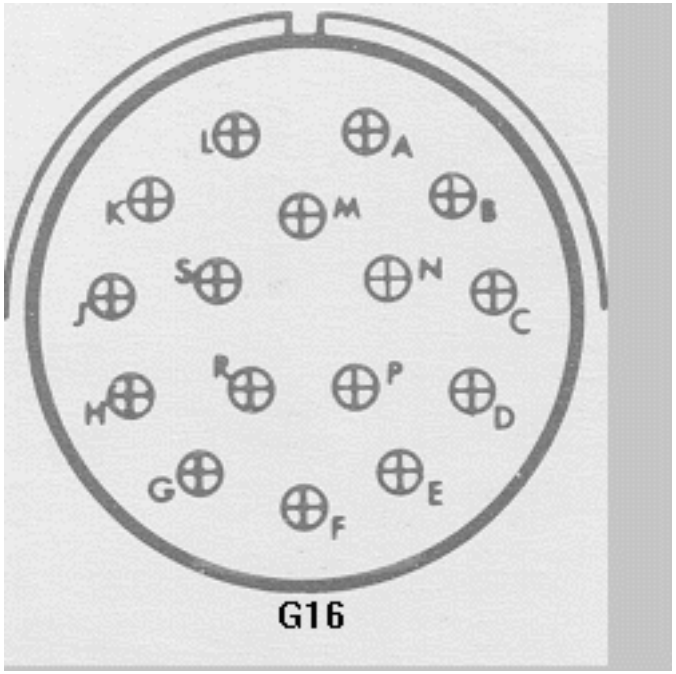
L
A
K
M
B
S
N
J
C
R
P
H
D
G
E
F
G16

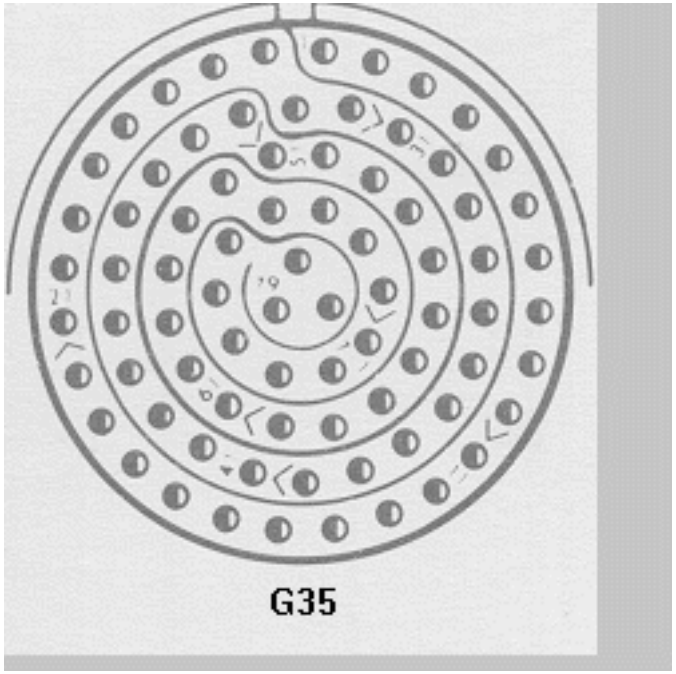
G35

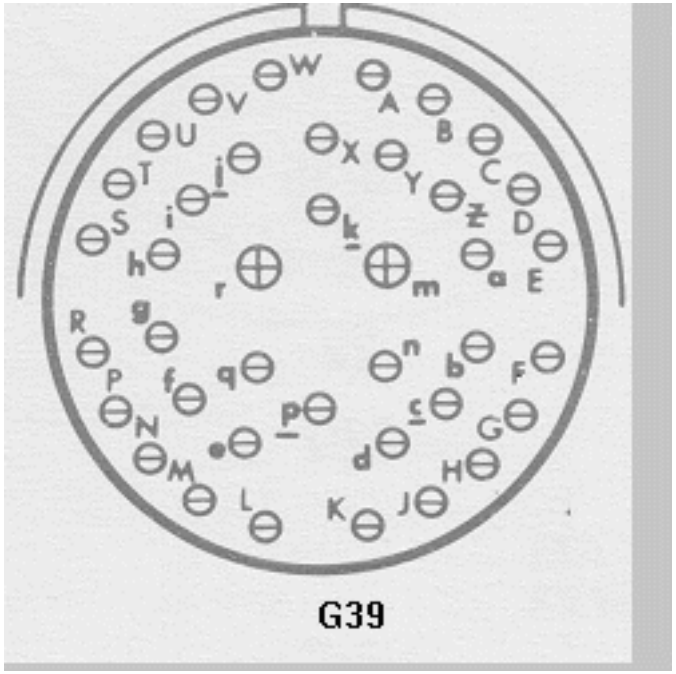

G39

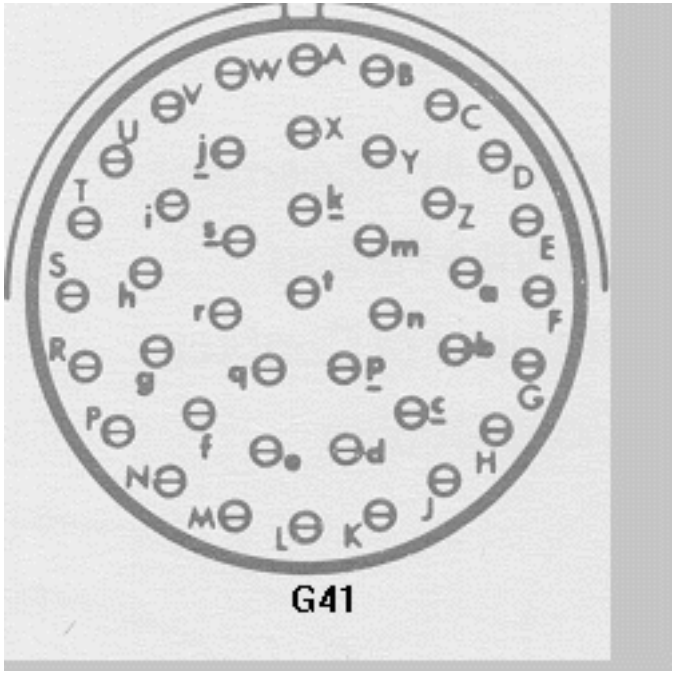

G41

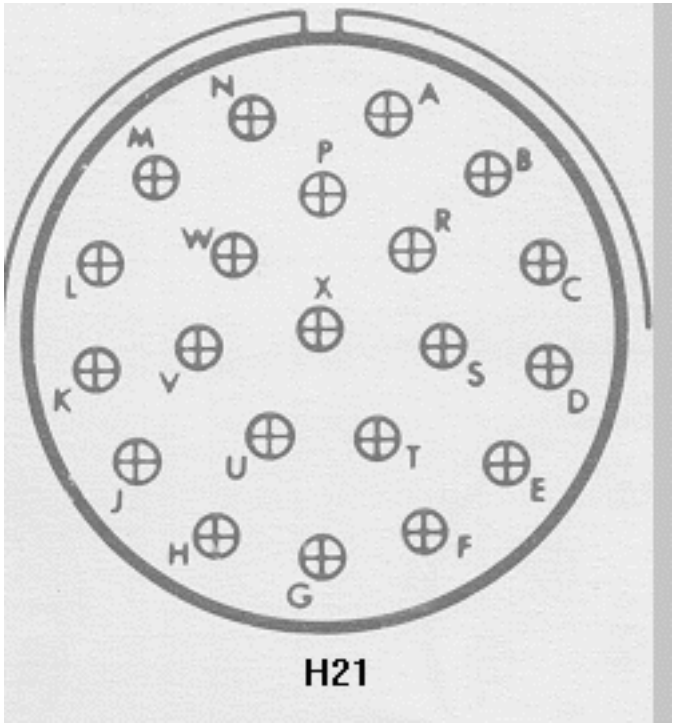
N
A
M
P
B
W
R
L
C
X
K
V
S
D
U
T
J
E
H
F
G
H21

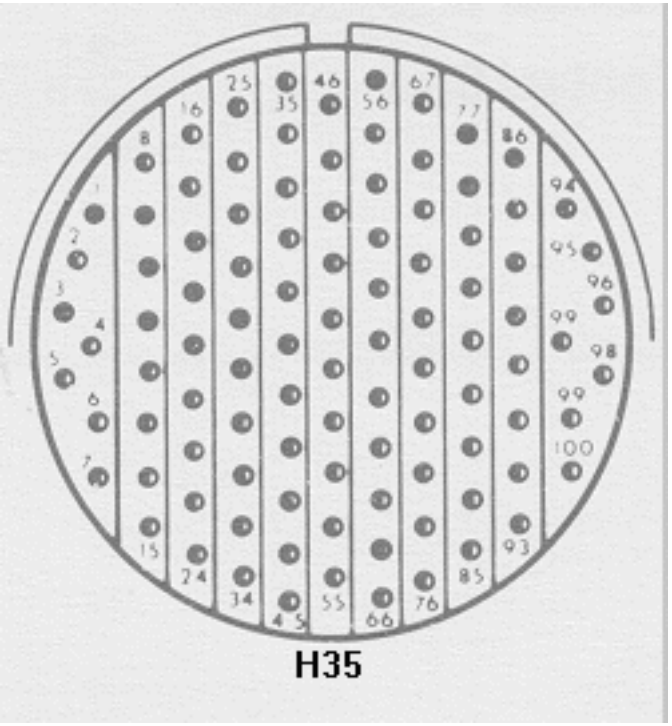
H35

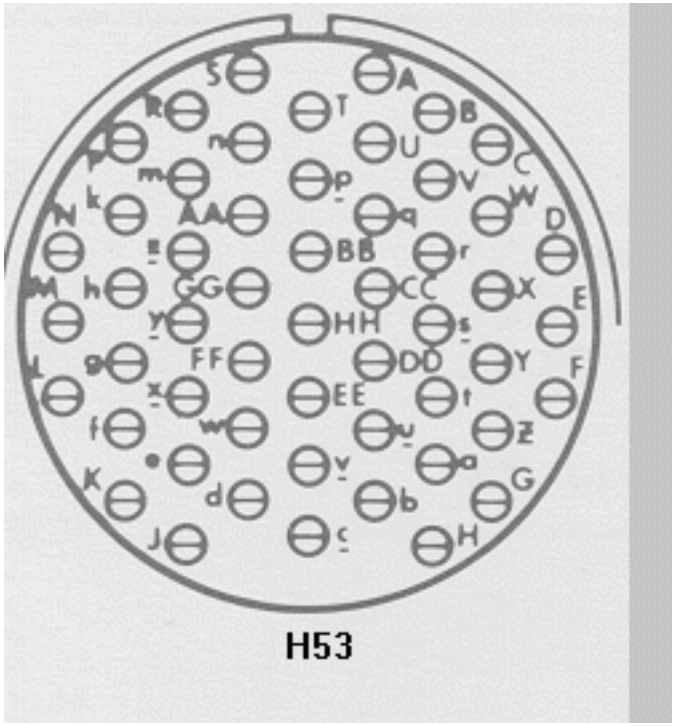
H53

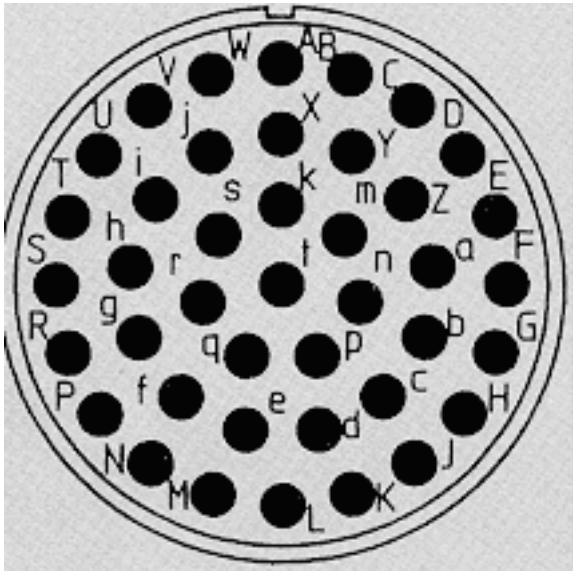

H55

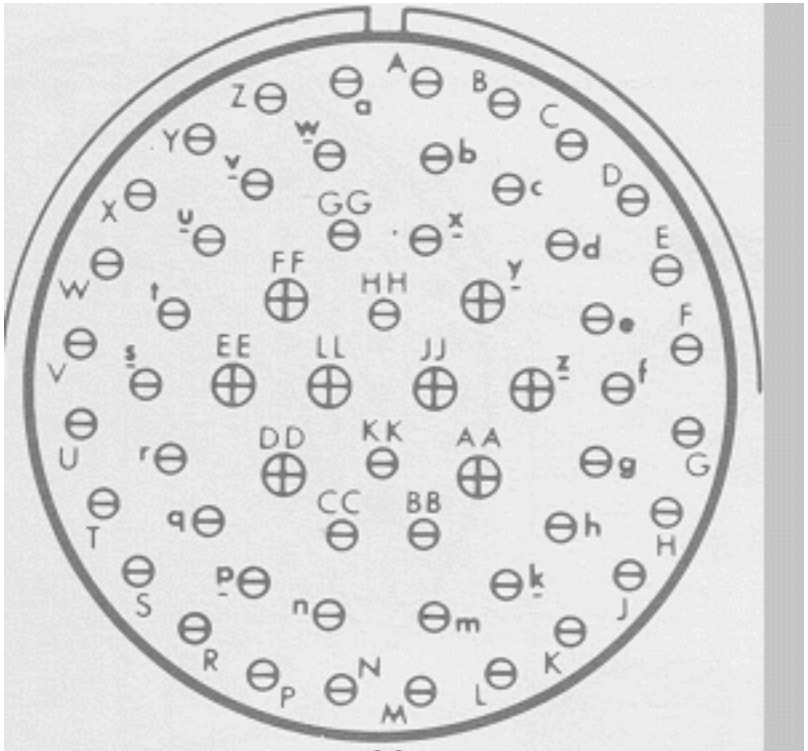
A
B
C
D
E
F
G
H
J
K
L
M
N
P
R
S
T
U
V
W
X
Y
Z
a
b
c
d
e
f
g
h
k
m
n
p
q
r
s
t
u
v
w
x
y
z
GG
FF
HH
EE
LL
JJ
DD
KK
AA
CC
BB

J4

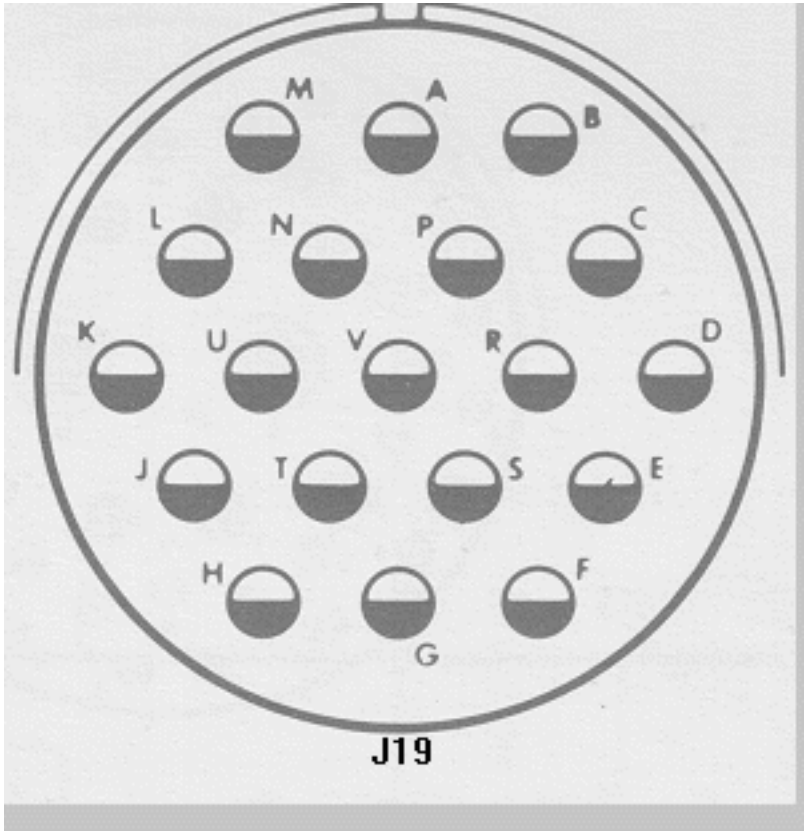
M
A
B
L
N
P
C
K
U
V
R
D
J
T
S
E
H
F
G
J19

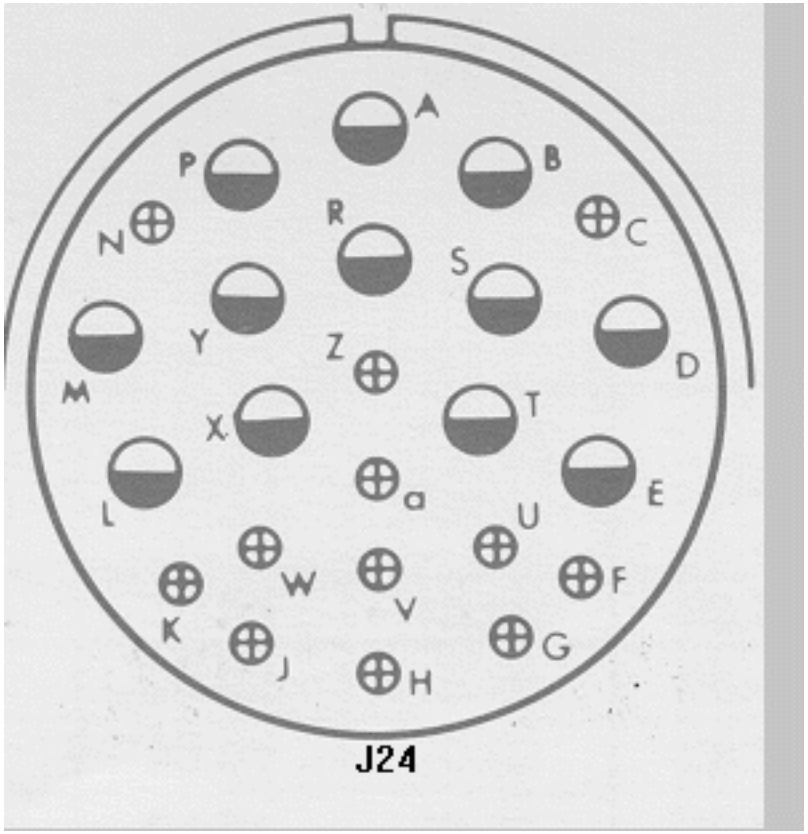
A
B
C
D
E
F
G
H
J
K
L
M
N
P
R
S
T
U
V
W
X
Y
Z
a
J24

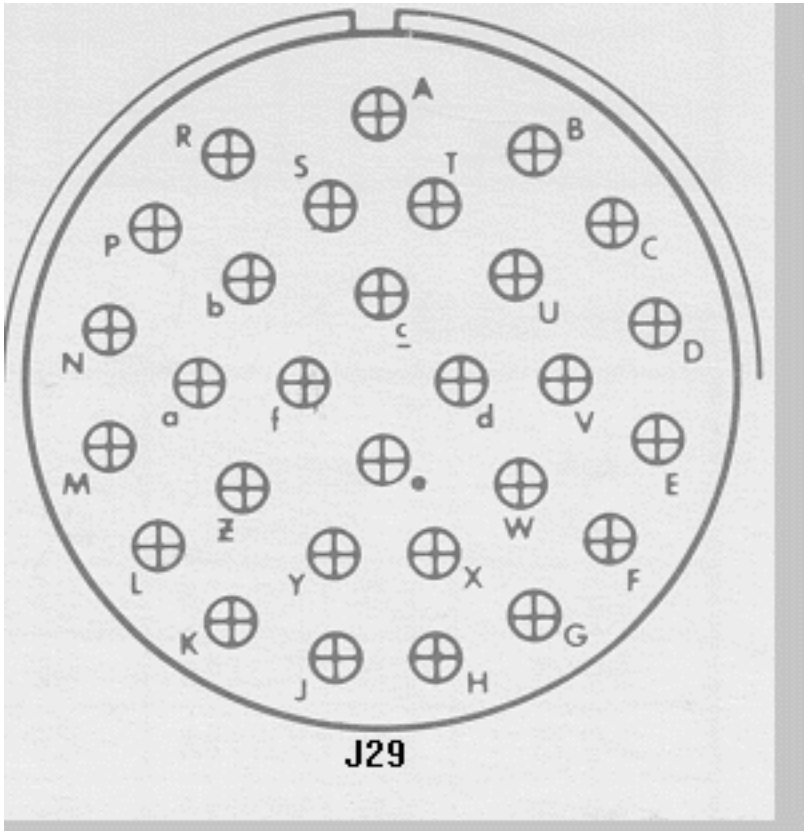

J29

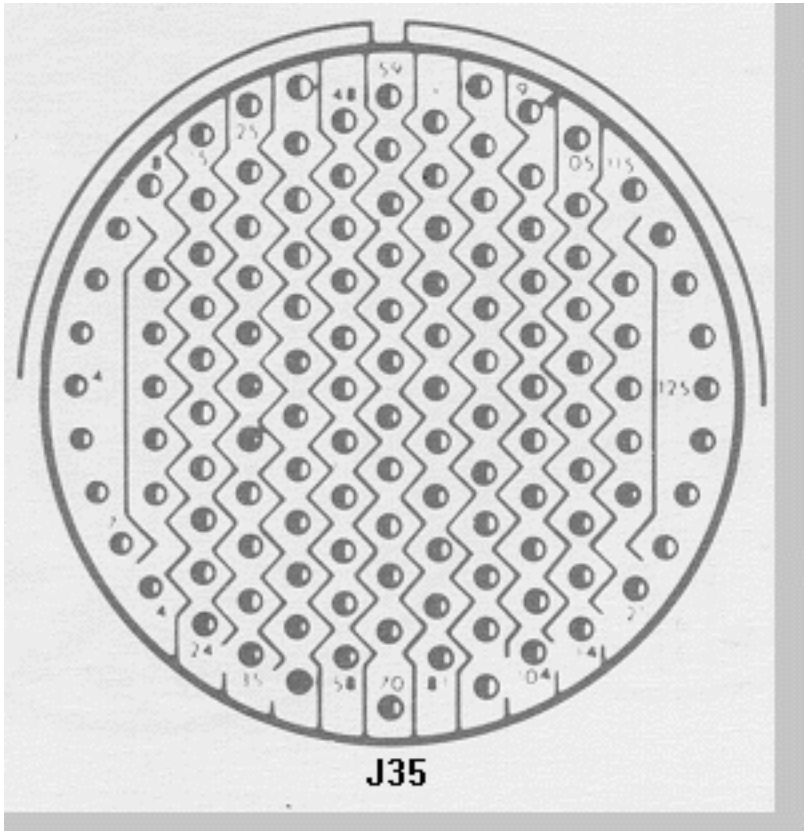
J35

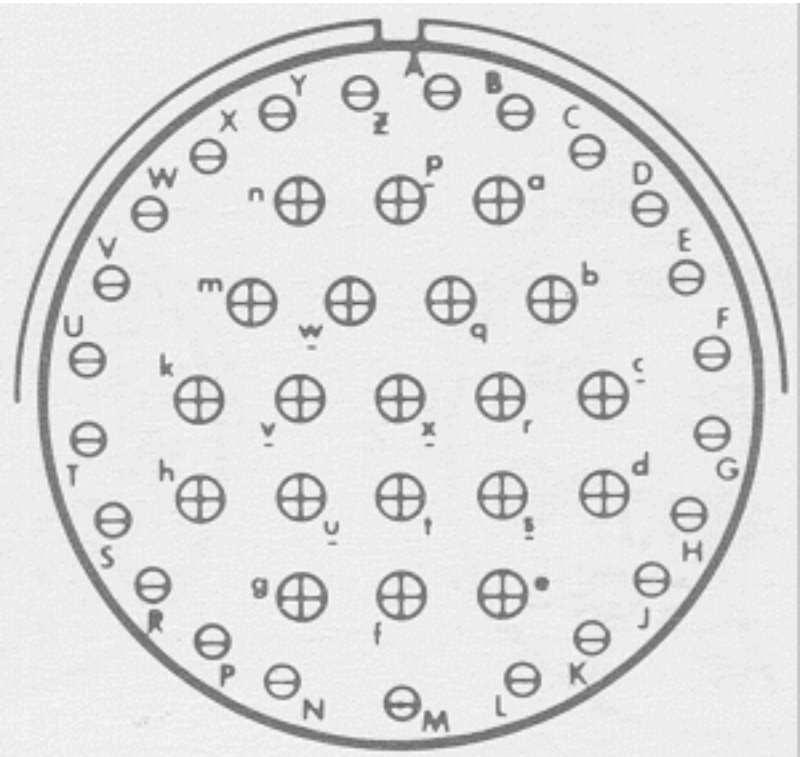

J43

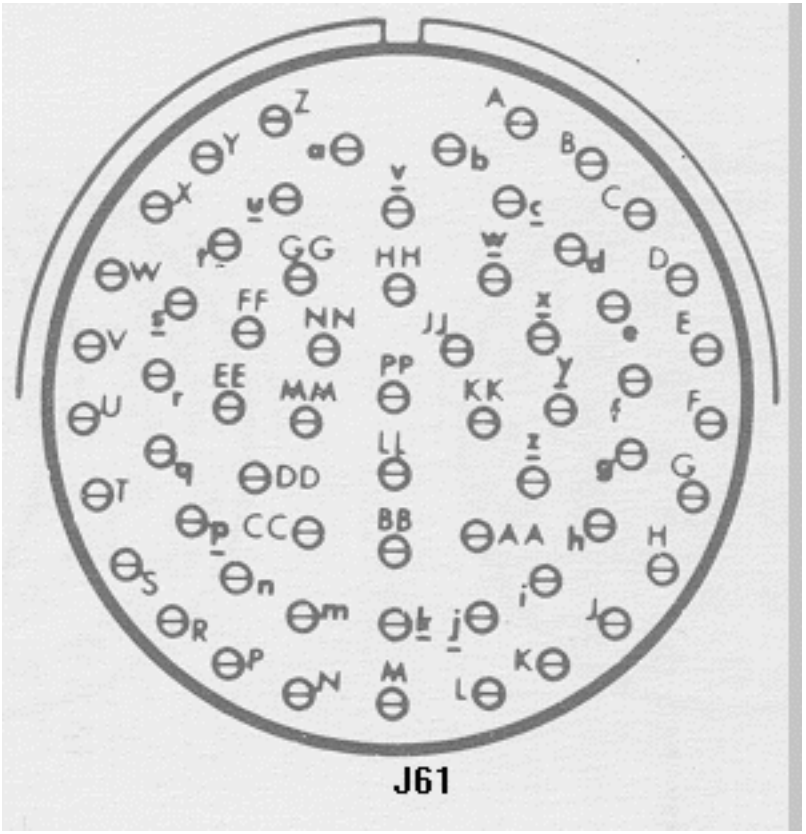

MIL-DTL-38999 Circular Connector Manufacturer Listing

And Links to Manufacturer Homepages

Click

here

for detailed information regarding part technologies offered by manufacturers listed in the

PSAP

Core Suppliers List

Listed below are links to manufacturer data sites that may provide additional part related information. The linked sites are not under the control of NPSL and NASA is not responsible for information contained in the linked site. We are providing these links for your convenience only.

Aero Electric Connector, Inc.

16207 Carmenita Rd

Cerritos, CA 90701

Cage Code: 59976
Tel.: 310-404-8005
Amphenol Aerospace - Amphenol Connectors (Formerly Bendix)
40-60 Deleware Avenue
Sidney, NY 13838
Cage Code: 77820
Tel.: 607-563-5011
Amphenol Aerospace - Pyle National Connectors
40-60 Deleware Avenue
Sidney, NY 13838
Cage Code: 77820
Tel.: 607-563-5011
Deutsch Engineered Connecting Devices
36033 Whittier Avenue
Hemet, CA 92545
Cage Code: 11139
Tel.: 909-765-2200
Framatome Connectors France
145 Rue Yves Le Coz
F78035 Versailles, Cedex, France
Cage Code: F0225
Tel.: 011-33-1-39-49-21-83
G H Technology, Inc. (Aerospace Products Division)
750 West Ventura Blvd
Camarillo, CA 93010
Cage Code: 0D0V6
Tel.: 805-484-0543
Hermetic Seal Corporation
4232 Temple City BLlvd
Rosemead, CA 91770-1552
Cage Code: 04820
Tel.: 626-443-8931
ITT Cannon
666 East Dyer Rd
Santa Ana, CA 92705
Cage Code: 71468
Tel.: 714-557-4700
Sealtron, Inc.
9705 Reading Rd
CincinnatiI, OH 45215-3592

Cage Code: 97814

Tel.: 513-733-8400

Home

|

NASA Parts Selection List (NPSL)

|

Connectors

| D-Subminiature Connectors

About NPSL

Prohibited Materials

Parts Selection Table of Contents

Capacitors

Circuit Protection Devices

Fuses

Connectors

Filters

Inductors

Microcircuits

NEW!

Monolithics

Hybrids

Resistors

Semiconductors

(Summary)

Diodes

Transistors

Thermistors

Wire and Cable

D-Subminiature Connectors

The following D-subminiature connector types are available for selection:

Type Designation	Description	Specification
311P409 M24308	D-Subminiature Type, Removable Crimp Contacts, Low Residual Magnetism	GSFC S-311-P-4/09 MIL-DTL-24308
311P407 M24308	D-Subminiature Type, High Density, Removable Crimp Contacts, Low Residual Magnetism	GSFC S-311-P-4/07 MIL-DTL-24308
311P10 311P405 M24308	D-Subminiature Type, Solder and Crimp Removable Contacts, Low Residual Magnetism, Standard Power, Coaxial, High Voltage and Combination Inserts	GSFC S-311-P-10 GSFC S-311-P-4/05 MIL-D

Parts

|

Packaging

|
Radiation
|
Publications
|
Calendar
|
Experts
Admin Login
|
Request Account
|
Feedback
|
Site Map
|
Help
|
Search
NEPP Program Manager:
Chuck Barnes, Jet Propulsion Laboratory
Responsible NASA Official:
Michael Sampson, NEPAG Manager
Website Comments:
Web Development Team
Last Modified:

August 8, 2001
AETD IT Security Banner
NASA Privacy Statement
GSFC S-311-P-10, S-311-P-4/05 and MIL-DTL-24308
D-Subminiature Connectors
Click Here for List of Available Standard Density Connectors with Size 20 Solder Contacts
Click Here for List of Available Connectors with Combination Power Coaxial and High Voltage Contacts
Important! Application Notes
Available Sources
GSFC S-311-P-10 Part Number Explanation
GSFC S-311-P-4/05 Part Number Explanation
MIL-DTL-24308 Part Number Explanation
Revision History for NASA Parts Selection List for This Section
Last Updated 02/29/00

GSFC S-311-P-4/05 and S-311-P-10 Combination D-Subminiature Connectors

APPLICATION NOTES

For S-311-P-10 connectors, normal mounting hole diameter is 0.120". To specify a larger mounting hole diameter of 0.150", replace the "-12" in the part number with "-15". See

part number explanation

for details.

Hardware such as screwlocks, jackscrews, and jackposts are required to properly secure mated connector pairs and must be provided separately. Non-magnetic hardware is recommended to maintain controlled residual magnetism.

Connectors satisfy GSFC outgassing requirements of 1% Total Mass Loss (TML) and 0.1% Collected Volatile Condensable Material (CVCM).

Coaxial contacts should be used for signals of 1 GHz frequency or less. Use MIL-C-39012 connectors for higher frequencies.

Some suppliers use a nylon insulator material in their high voltage contacts. The nylon insulator may not meet program outgassing limits.

Coaxial, high voltage and crimp standard power contacts must be supplied separately. Coaxial and high voltage contact part numbers are procured per GSFC S-311-P-4/06. For crimp type standard power contacts (used with S-311-P-4/05 only), procure P/N G10S1 for socket contacts and G10P1 for pin contacts per GSFC specification S-311-P-4/10.

For S-311-P-10 connectors "C" level residual magnetism (20 Gamma) is available in lieu of "B" level (200 Gamma).

Revision History for NASA Parts Selection List for

S-311-P-10, S-311-P-4/05 and MIL-DTL-24308

02/29/00	Changed spec reference to MIL-DTL or MIL-PRF as appropriate
03/09/98	Completely revamped the application notes table (changed recommendation for using coaxial contacts to 1 GHz or less instead of 1 MHz or less, removed application notes which were not pertinent to this
01/06/98	Added S-311-P-4/05 Part Number Explanation
12/09/97	Initial Release of S-311-P-10, S-311-P-4/05 and MIL-C-24308 Section in the NPSL

GSFC S-311-P-10 D-Subminiature Connectors

Part Number Ordering Information:

311P10	(B)	-X	X	-X	-XX
GSFC Specification Number	Socket Contact Designator	Insert Arrangement	Contact Type	Residual Magnetism	Mounting Hole Size

Socket Contact Designator	Insert Arrangement	Contact Type	Residual Magnetism	Mounting Hole Size
(Not Applicable to Pin Contacts)	1 thru 25	P = Pins	B = 200 Gamma	12 = 0.120 inches
No Digit = Contact Springs		S = Sockets	C = 20 Gamma	15 = 0.150 inches
B = Split Finger Sleeved (First Choice)	Note: Insert Arrangement 19 has been Cancelled			

Click Here for Available Parts Listing

GSFC S-311-P-4/05 D-Subminiature Connectors

Combination Power, Coaxial and High Voltage Contacts

Part Number Ordering Information:

311P4	05	-X	X	-X	-XX
GSFC Specification Number	Detail Specification Sheet	Insert Arrangement	Contact Type	Residual Magnetism	Mounting Hole Size

Insert Arrangement	Contact Type	Residual Magnetism	Mounting Hole Size
6 thru 25	P = Pins	B = 200 Gamma	12 = 0.120 inches
	S = Sockets		15= 0.150 inches
Note: Insert Arrangement 19 has been Cancelled			

Click Here for Available Parts Listing

MIL-DTL-24308 D-Subminiature Connectors

Standard Density Size 20 Crimp Contacts, -55deg.C to +125deg.C

Part Number Ordering Information:

M24308	/X	-XXX
Military Specification Number	Detail Specification Sheet	Unique Dash Number Defining Connector Options

Detail Specification Sheet	Description
/1	Receptacle, Nickel Plated, Solder Contacts
/2	Receptacle, Nickel Plated, Crimp Contacts
/3	Plug, Nickel Plated, Solder Contacts
/4	Plug, Nickel Plated, Crimp Contacts
/5	Receptacle, Gold Plated, Solder Contacts
/6	Receptacle, Gold Plated, Solder Contacts
/7	Plug, Gold Plated, Solder Contacts
/8	Plug, Gold Plated, Crimp Contacts

Click Here for Available Parts Listing

GSFC S-311-P-10 and MIL-DTL-24308 D-Subminiature Connectors

Standard Density Size 20 Crimp Contacts

Receptacles, Socket Contacts

Plugs, Pin Contacts

Receptacles, Socket Contacts

Description	Non-Magnetic Controlled Low Residual Magnetism		General Purpose		Non-Magnetic
Shell Finish	Gold		Nickel		Gold
Grade	Level 1 and 2		Level 2		Level 2

Specification	GSFC S-311-P-10		MIL-DTL-24308/1		MIL-PRF-24308/5
Number of Contacts	Part Number		Part Number		Part Number
9	311P10-1S-B-12		M24308/1-34		M24308/5-34
15	311P10-2S-B-12		M24308/1-35		M24308/5-35
25	311P10-3S-B-12		M24308/1-36		M24308/5-36
37	311P10-4S-B-12		M24308/1-37		M24308/5-37
50	311P10-5S-B-12		M24308/1-38		M24308/5-38
9	-		M24308/1-56 (float mount)		M24308/5-56 (float mount)
15	-		M24308/1-57 (float mount)		M24308/5-57 (float mount)
25	-		M24308/1-58 (float mount)		M24308/5-58 (float mount)
37	-		M24308/1-59 (float mount)		M24308/5-59 (float mount)
50	-		M24308/1-60 (float mount)		M24308/5-60 (float mount)

Plugs, Pin Contacts

Description	Non-Magnetic Controlled Low Residual Magnetism		General Purpose		Non-Magnetic
Shell Finish	Gold		Nickel		Gold
Grade	Level 1 and 2		Level 2		Level 2
Specification	GSFC S-311-P-10		MIL-PRF-24308/3		MIL-PRF-24308/7
Number of Contacts	Part Number		Part Number		Part Number
9	311P10-1P-B-12		M24308/3-23		M24308/7-23
15	311P10-2P-B-12		M24308/3-24		M24308/7-24
25	311P10-3P-B-12		M24308/3-25		M24308/7-25
37	311P10-4P-B-12		M24308/3-26		M24308/7-26
50	311P10-5P-B-12		M24308/3-27		M24308/7-27
9	-		M24308/3-39 (float mount)		M24308/7-34 (float mount)
15	-		M24308/3-40 (float mount)		M24308/7-35 (float mount)
25	-		M24308/3-41 (float mount)		M24308/7-36 (float mount)
37	-		M24308/3-42 (float mount)		M24308/7-37 (float mount)
50	-		M24308/3-43 (float mount)		M24308/7-38 (float mount)

GSFC S-311-P-10 and S-311-P-4/05 D-Subminiature Connectors

Combination Power, Coaxial and High Voltage Contacts

Receptacles, Socket Contacts

Plugs, Pin Contacts

Receptacles, Socket Contacts

S-311-P-10	S-311-P-4/05			Number of Contacts
Part Number	Part Number	Generic Insert Arrangement Designator	Size 20 Standard Power	Coaxial and/or High Voltage
311P10-6S-B-12	311P405-6S-B-12	5W1	4	1
311P10-7S-B-12	311P405-7S-B-12	3W3	0	3
311P10-8S-B-12	311P405-8S-B-12	7W2	5	2
311P10-9S-B-12	311P405-9S-B-12	11W1	10	1

311P10-10S-B-12	311P405-10S-B-12	5W5	0	5
311P10-11S-B-12	311P405-11S-B-12	9W4	5	4
311P10-12S-B-12	311P405-12S-B-12	13W3	10	3
311P10-13S-B-12	311P405-13S-B-12	17W2	15	2
311P10-14S-B-12	311P405-14S-B-12	21W1	20	1
311P10-15S-B-12	311P405-15S-B-12	8W8	0	8
311P10-16S-B-12	311P405-16S-B-12	13W6	7	6
311P10-17S-B-12	311P405-17S-B-12	17W5	12	5
311P10-18S-B-12	311P405-18S-B-12	21WA4	17	4
311P10-20S-B-12	311P405-20S-B-12	25W3	22	3
311P10-21S-B-12	311P405-21S-B-12	27W2	25	2
311P10-22S-B-12	311P405-22S-B-12	24W7	17	7
311P10-23S-B-12	311P405-23S-B-12	36W4	32	4
311P10-24S-B-12	311P405-24S-B-12	43W2	41	2
311P10-25S-B-12	311P405-25S-B-12	47W1	46	1

Plugs, Pin Contacts

S-311-P-10	S-311-P-4/05			Number of Contacts
Part Number	Part Number	Generic Insert Arrangement Designator	Size 20 Standard Power	Coaxial and/or High Voltage
311P10-6P-B-12	311P405-6P-B-12	5W1	4	1
311P10-7P-B-12	311P405-7P-B-12	3W3	0	3
311P10-8P-B-12	311P405-8P-B-12	7W2	5	2
311P10-9P-B-12	311P405-9P-B-12	11W1	10	1
311P10-10P-B-12	311P405-10P-B-12	5W5	0	5
311P10-11P-B-12	311P405-11P-B-12	9W4	5	4
311P10-12P-B-12	311P405-12P-B-12	13W3	10	3
311P10-13P-B-12	311P405-13P-B-12	17W2	15	2
311P10-14P-B-12	311P405-14P-B-12	21W1	20	1
311P10-15P-B-12	311P405-15P-B-12	8W8	0	8
311P10-16P-B-12	311P405-16P-B-12	13W6	7	6
311P10-17P-B-12	311P405-17P-B-12	17W5	12	5
311P10-18P-B-12	311P405-18P-B-12	21WA4	17	4
311P10-20P-B-12	311P405-20P-B-12	25W3	22	3
311P10-21P-B-12	311P405-21P-B-12	27W2	25	2
311P10-22P-B-12	311P405-22P-B-12	24W7	17	7
311P10-23P-B-12	311P405-23P-B-12	36W4	32	4
311P10-24P-B-12	311P405-24P-B-12	43W2	41	2
311P10-25P-B-12	311P405-25P-B-12	47W1	46	1

GSFC S-311-P-10 and MIL-DTL-24308 D-Subminiature Connectors

Standard Density Size 20 Crimp Contacts

Insert Arrangements

Plug Face is Shown. Mating Socket Face is Mirror Image.

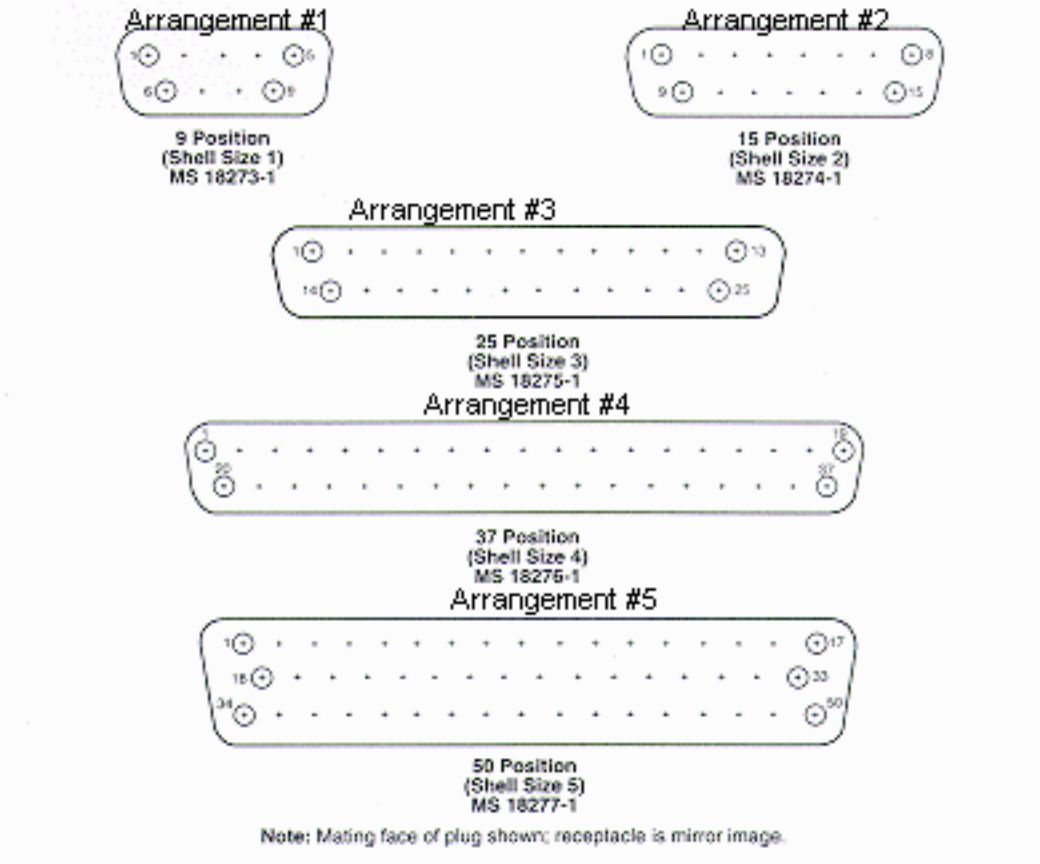

GSFC S-311-P-10 and S-311-P-4/05 D-Subminiature Connectors

Combination Power, Coaxial and High Voltage Contacts

Insert Arrangements

Socket Face is Shown. Mating Plug Face is Mirror Image.

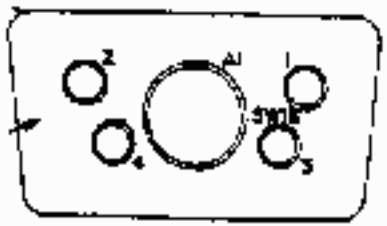

Arrangement #6 (5W1)

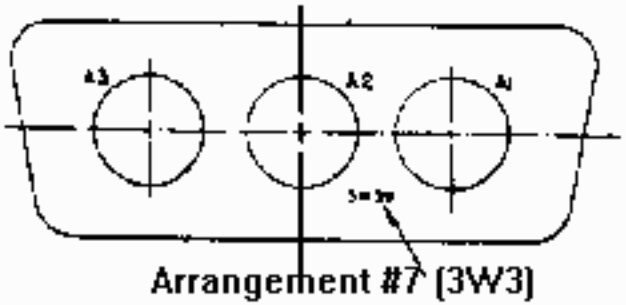

Arrangement #7 (3W3)

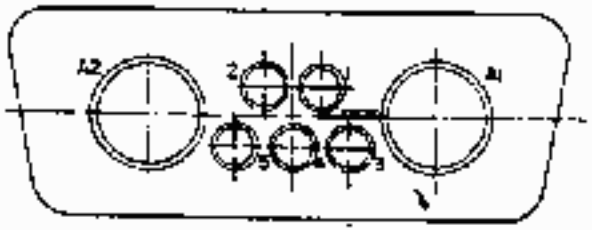

Arrangement #8 (7W2)

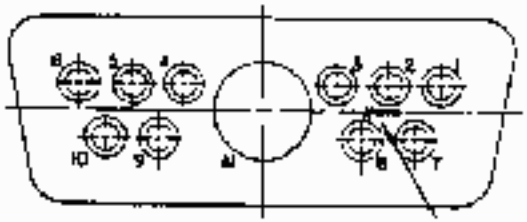

Arrangement #9 (11W1)

Arrangement #10 (5W5)

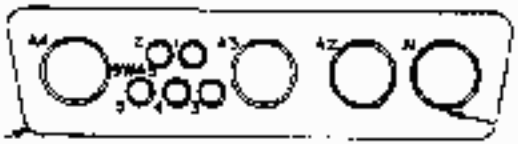

Arrangement #11 (9W4)

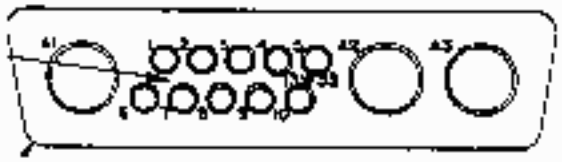

Arrangement #12 (13W3)

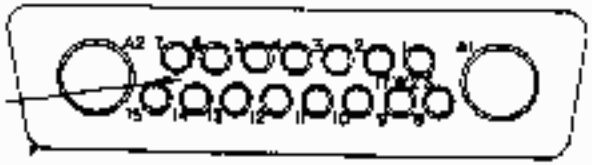

Arrangement #13 (17W2)

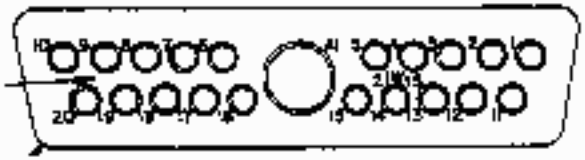

Arrangement #14 (21W1)

Arrangement #15 (8W8)

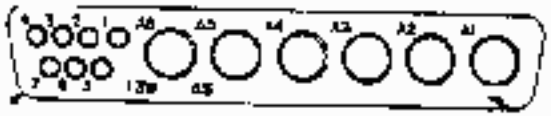

Arrangement #16 (13W6)

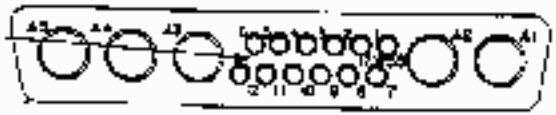

Arrangement #17 (17W5)

Arrangement #18 (21WA4)

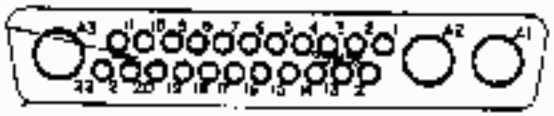

Arrangement #20 (25W3)

Arrangement #21 (27W2)

Arrangement #22 (24W7)

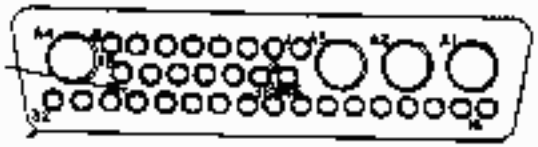

Arrangement #23 (36W4)

Arrangement #24 (43W2)

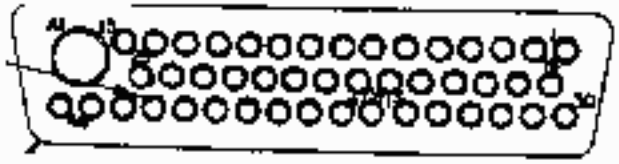

Arrangement #25 (47W1)

Insert Arrangements

Socket Face is Shown. Mating Plug Face is Mirror Image.

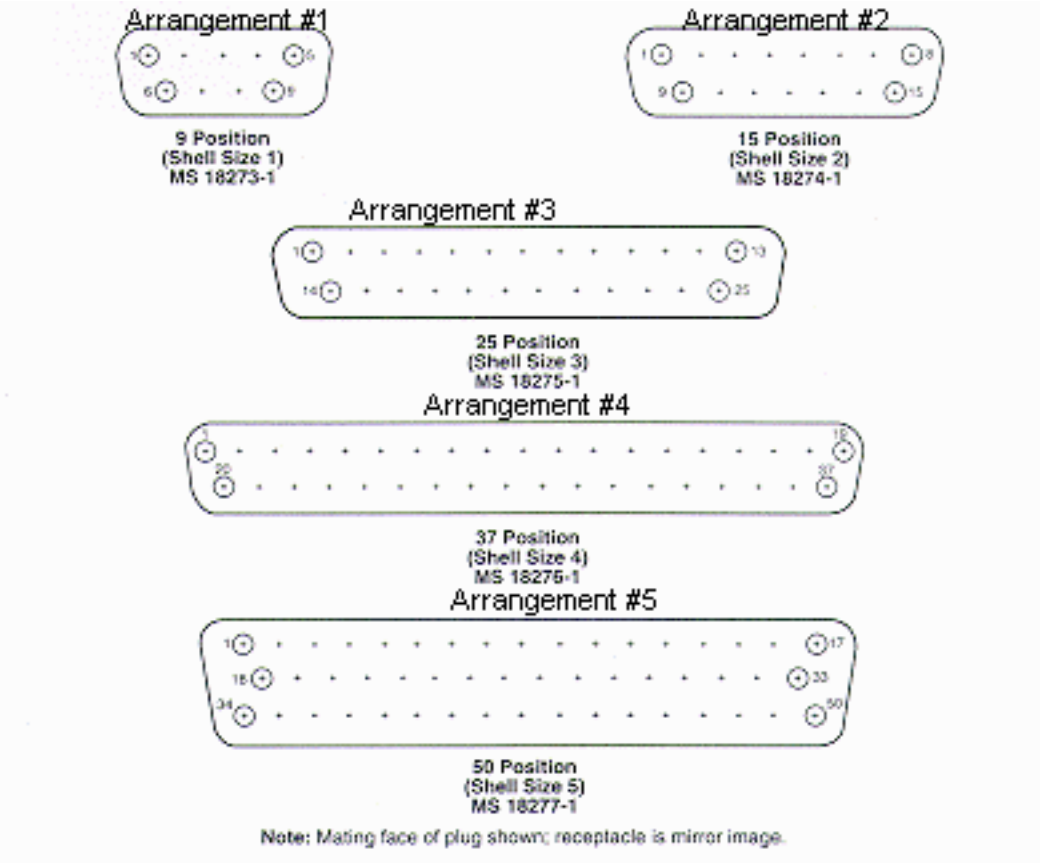

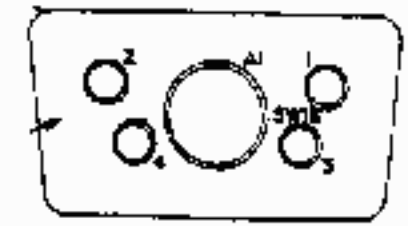

Arrangement #6 (5W1)

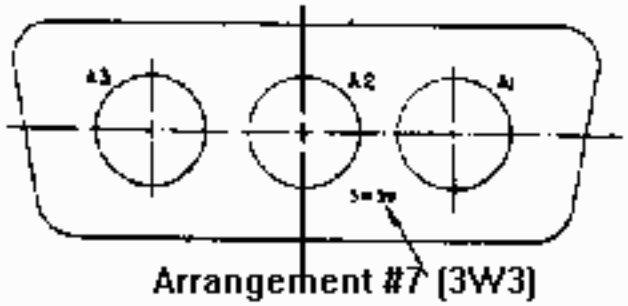

Arrangement #7 (3W3)

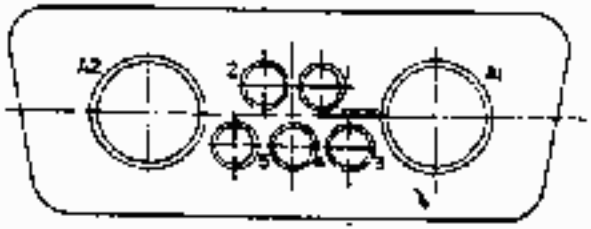

Arrangement #8 (7W2)

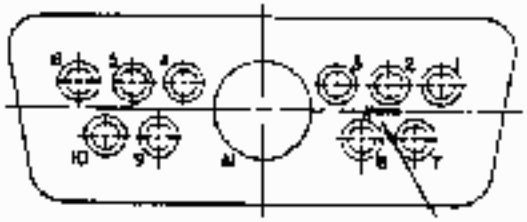

Arrangement #9 (11W1)

Arrangement #10 (5W5)

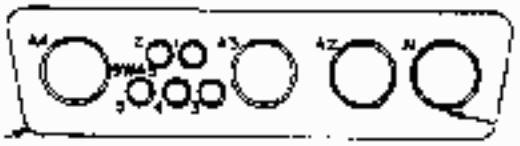

Arrangement #11 (9W4)

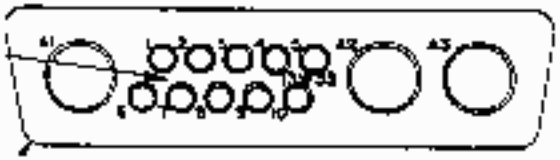

Arrangement #12 (13W3)

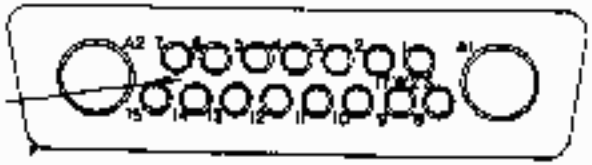

Arrangement #13 (17W2)

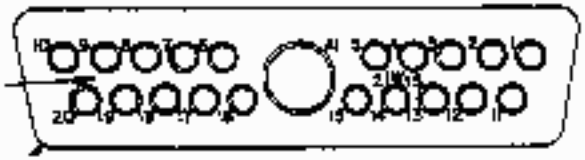

Arrangement #14 (21W1)

Arrangement #15 (8W8)

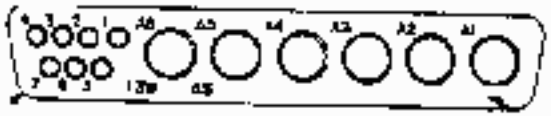

Arrangement #16 (13W6)

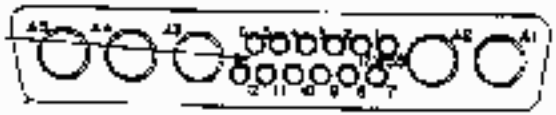

Arrangement #17 (17W5)

Arrangement #18 (21WA4)

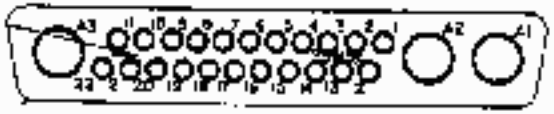

Arrangement #20 (25W3)

Arrangement #21 (27W2)

Arrangement #22 (24W7)

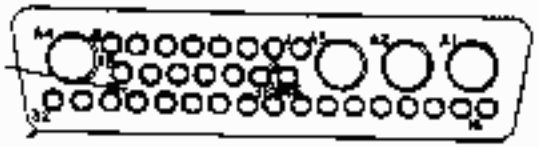

Arrangement #23 (36W4)

Arrangement #24 (43W2)

Arrangement #25 (47W1)

Insert Arrangements

Socket Face is Shown. Mating Plug Face is Mirror Image.

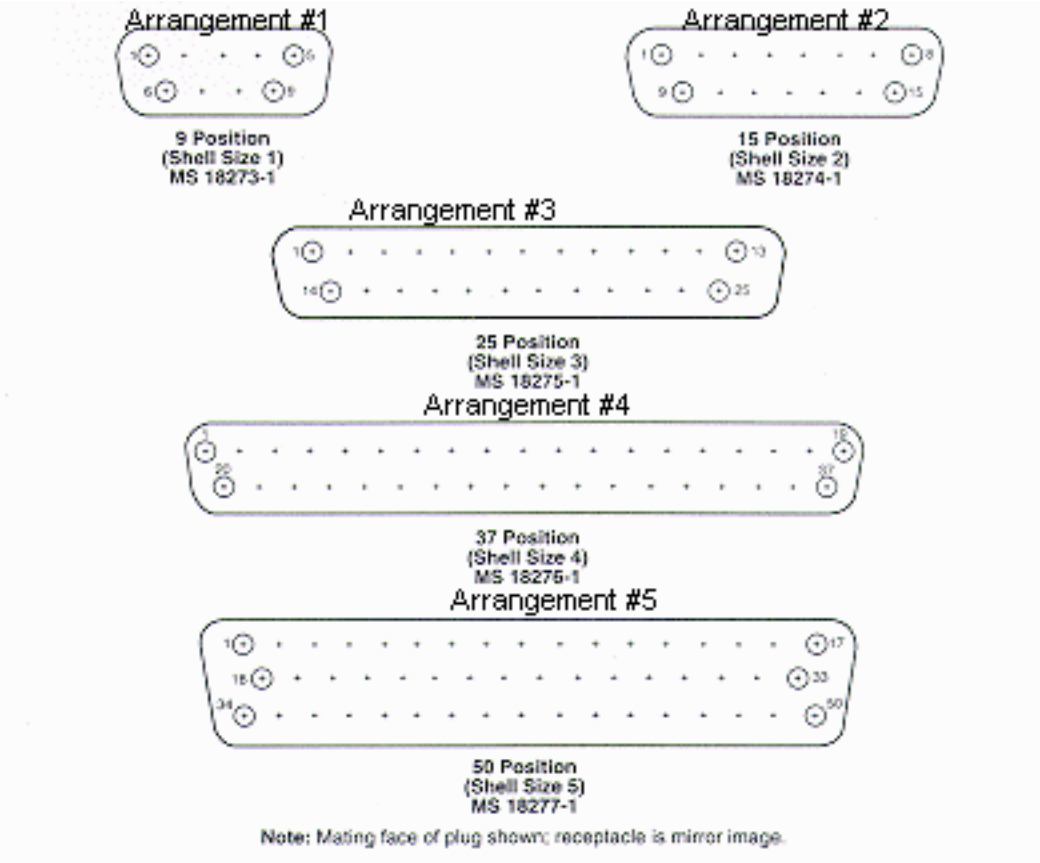

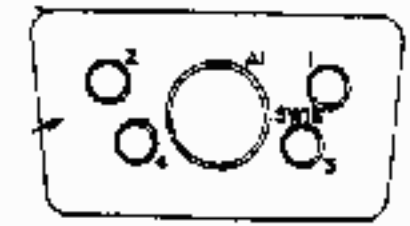

Arrangement #6 (5W1)

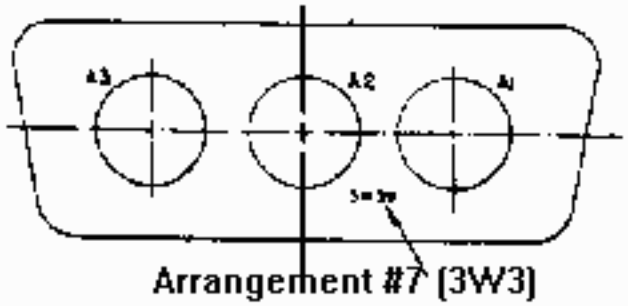

Arrangement #7 (3W3)

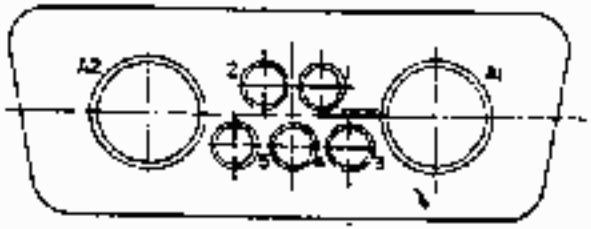

Arrangement #8 (7W2)

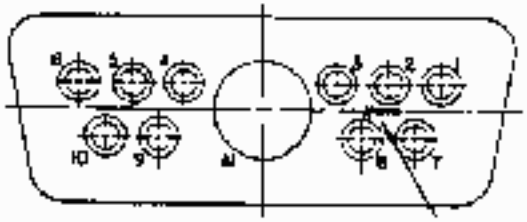

Arrangement #9 (11W1)

Arrangement #10 (5W5)

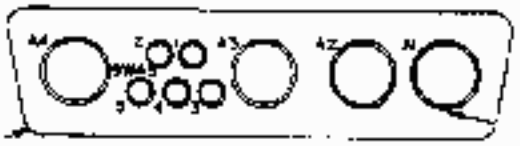

Arrangement #11 (9W4)

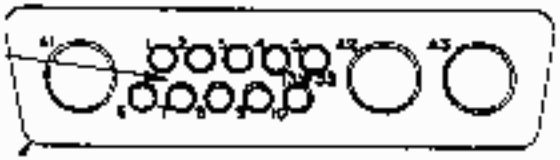

Arrangement #12 (13W3)

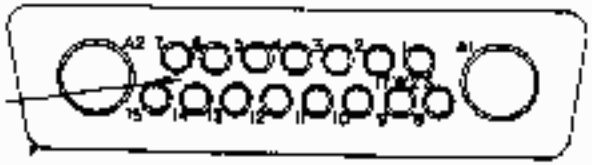

Arrangement #13 (17W2)

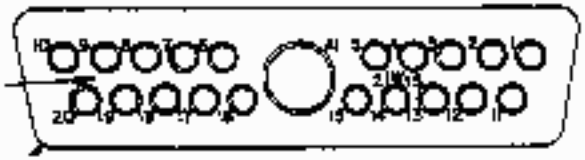

Arrangement #14 (21W1)

Arrangement #15 (8W8)

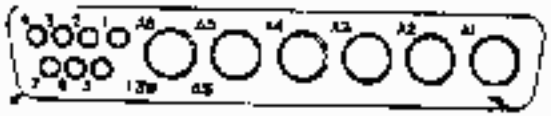

Arrangement #16 (13W6)

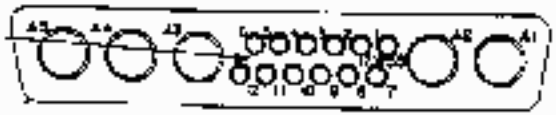

Arrangement #17 (17W5)

Arrangement #18 (21WA4)

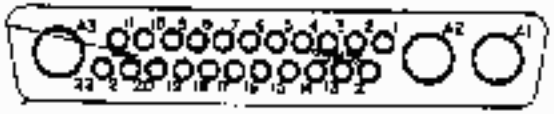

Arrangement #20 (25W3)

Arrangement #21 (27W2)

Arrangement #22 (24W7)

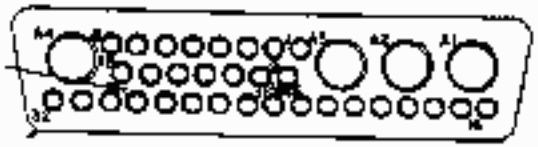

Arrangement #23 (36W4)

Arrangement #24 (43W2)

Arrangement #25 (47W1)

S-311-P-10, S-311-P-4/05 and MIL-DTL-24308 D-Subminiature Connector Manufacturer Listing

Click

here

for detailed information regarding part technologies offered by manufacturers listed in the

PSAP

Core Suppliers List

Listed below are links to manufacturer data sites that may provide additional part related information. The linked sites are not under the control of NPSL and NASA is not responsible for information contained in the linked site. We are providing these links for your convenience only.

AMP INC.

EISENHOWER BLVD / MS210-20

HARRISBURG, PA 17105-2608

Cage Code: 00779

Tel.: 717-564-0100

ITT CANNON

666 EAST DYER RD

SANTA ANA, CA 92705

Cage Code: 71468

Tel.: 714-557-4700

POSITRONIC INDUSTRIES INC.

429 N. CAMPBELL STREET

SPRINGFIELD, MO 65801-8247

Cage Code: 28198

Tel.: 417-866-2322

SOURIAU ET CIE (FRANCE)

3 AVENUE DU MARECHAL DEVAUX

91550 PARAY VIELLE-POSTE, FRANCE

Cage Code: F0225

Parent Organization: FRAMATOME CONNECTORS INTERNATIONAL

Tel.: 011-33-1-46-87-23-23

GSFC S-311-P-4/07 and MIL-DTL-24308 D-Subminiature Connectors

High Density Size 22D Crimp Contacts, -55deg.C to +125deg.C

Click Here for List of Available Parts

Important! Application Notes

Available Sources

GSFC S-311-P-4/07 Part Number Explanation

MIL-DTL-24308 Part Number Explanation

Revision History for NASA Parts Selection List for This Section

Last Updated: 09/19/01

GSFC S-311-P-4/07 and MIL-DTL-24308 D-Subminiature Connectors

High Density Size 22D Crimp Contacts, -55deg.C to +125deg.C

APPLICATION NOTES

MIL-DTL-24308 connectors are supplied with 0.120" mounting holes or 0.086" float mount bushings.

For S-311-P-4/07 connectors, normal mounting hole diameter is 0.120". To specify a larger mounting hole diameter of 0.150", replace the "-12" in the part number with "-15". See

part number explanation

for details.

Hardware such as screwlocks, jackscrews, and jackposts are required to properly secure mated connector pairs and must be provided separately.

Connectors satisfy GSFC outgassing requirements of 1% Total Mass Loss (TML) and 0.1% Collected Volatile Condensable Material (CVCM).

MIL-DTL-24308 connectors are also available without contacts, with float mount bushings or as kits. Many of these part numbers are not preferred because they are cadmium plated. The preferred part numbers for the various contacts are listed herein.

MIL-DTL-24308 connectors are supplied with contacts. Replacement contact part numbers are M39029/57-354 for sockets and M39029/58-360 for pins.

GSFC connectors are supplied WITHOUT contacts. Procure P/N G08S1 for socket contacts and G08P1 for pin contacts per GSFC specification S-311-P-4/08. Contacts are non-magnetic and do not contain color band marking.

Revision History for NASA Parts Selection List for GSFC S-311-P-4/7

09/19/01	Corrected image for insert arrangements for high density 311P407 type connectors (insert arrangments were misnumbered).
02/29/00	Changed spec references from MIL-C-24308 to MIL-DTL-24308 or MIL-PRF-24308 as appropriate
03/09/98	Corrected Manufacturer Listing to Include only Amp, Positronic and Souriau
12/09/97	Initial Release on GSFC S-311-P-4/7 Section in the NPSL

GSFC S-311-P-4/07 D-Subminiature Connectors

High Density Size 22D Crimp Contacts, -55deg.C to +125deg.C

Part Number Ordering Information:

311P4	07	-X	X	-X	-XX
GSFC Specification Number	Detail Specification Sheet	Insert Arrangement	Contact Type	Residual Magnetism	Mounting Hole Size

Insert Arrangement	Contact Type	Residual Magnetism	Mounting Hole Size
1	P = Pins	B = 200 Gamma	12 = 0.120 inches
2	S = Sockets		15= 0.150 inches
3			
4			
5			
6			

Click Here for Available Parts Listing

MIL-DTL-24308 D-Subminiature Connectors

Standard Density Size 20 Crimp Contacts, -55deg.C to +125deg.C

Part Number Ordering Information:

M24308	/X	-XXX
Military Specification Number	Detail Specification Sheet	Unique Dash Number Defining Connector Options

Detail Specification Sheet	Description
/1	Receptacle, Nickel Plated, Solder Contacts
/2	Receptacle, Nickel Plated, Crimp Contacts
/3	Plug, Nickel Plated, Solder Contacts
/4	Plug, Nickel Plated, Crimp Contacts
/5	Receptacle, Gold Plated, Solder Contacts
/6	Receptacle, Gold Plated, Solder Contacts
/7	Plug, Gold Plated, Solder Contacts
/8	Plug, Gold Plated, Crimp Contacts

Click Here for Available Parts Listing

GSFC S-311-P-4/07 and MIL-DTL-24308 D-Subminiature Connectors

High Density Size 22D Crimp Contacts

Insert Arrangements

Mating Face of Plug is Shown. Mating Face of Receptacle is Mirror Image

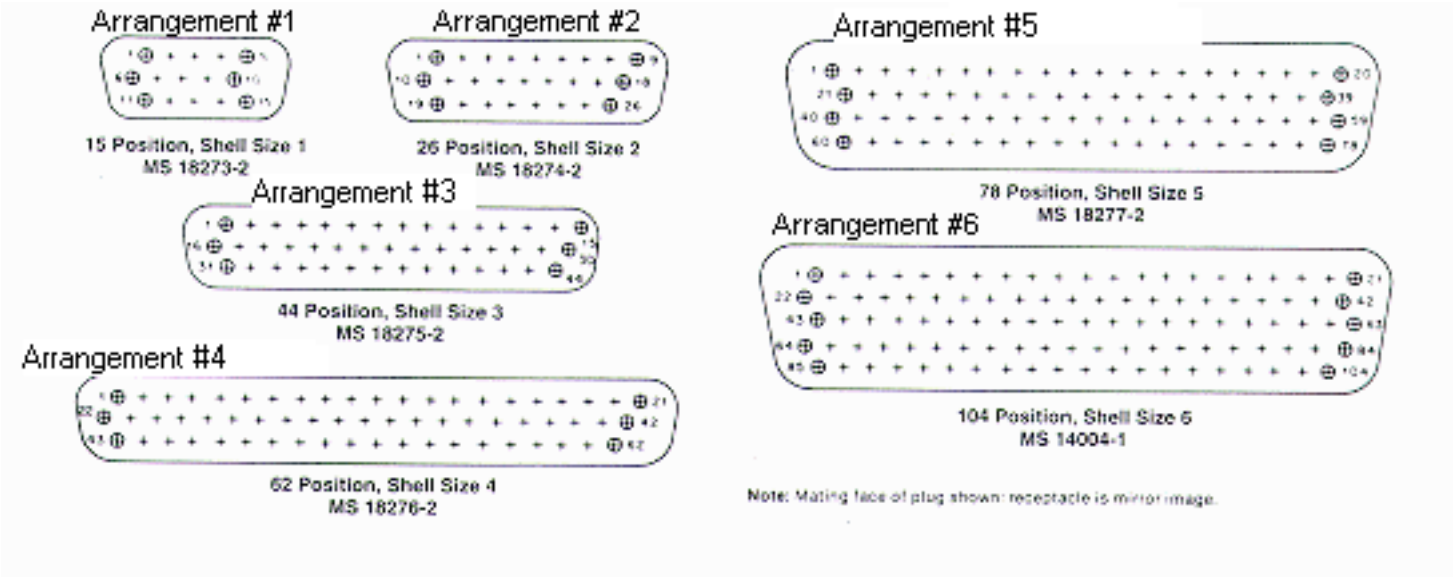

GSFC S-311-P-4/07 and MIL-DTL-24308 D-Subminiature Connectors

High Density Size 22D Crimp Contacts

Receptacles, Socket Contacts

Plugs, Pin Contacts

Receptacles, Socket Contacts

Description	Non-Magnetic Controlled Low Residual Magnetism

General Purpose

Non-Magnetic

Shell Finish

Gold

Nickel

Gold

Grade

Level 1 and 2

Level 2

Level 2

Specification

GSFC S-311-P-4/07

MIL-DTL-24308/2

MIL-PRF-24308/6

Number of Contacts

Part Number

Part Number

Part Number

15

311P407-1S-B-12

M24308/2-526

M24308/6-512

26

311P407-2S-B-12

M24308/2-527

M24308/6-513

44

311P407-3S-B-12

M24308/2-528

M24308/6-514

62

311P407-4S-B-12

M24308/2-529

M24308/6-515

78

311P407-5S-B-12

M24308/2-530

M24308/6-516

104

311P407-6S-B-12

M24308/2-531

M24308/6-517

15

-

M24308/2-532 (kit)

M24308/6-518 (kit)

26

-

M24308/2-533 (kit)

M24308/6-519 (kit)

44

-

M24308/2-534 (kit)

M24308/6-520 (kit)

62

-

M24308/2-535 (kit)

M24308/6-521 (kit)

78

-

M24308/2-536 (kit)

M24308/6-522 (kit)

104

-

M24308/2-537 (kit)

M24308/6-523 (kit)

15

-

M24308/2-565 (w/o contacts)

M24308/6-545 (w/o contacts)

26

-

M24308/2-566 (w/o contacts)

M24308/6-546 (w/o contacts)

44

-

M24308/2-567 (w/o contacts)

M24308/6-547 (w/o contacts)

62

-

M24308/2-568 (w/o contacts)

M24308/6-548 (w/o contacts)

78

-

M24308/2-569 (w/o contacts)

M24308/6-549 (w/o contacts)

104

-

M24308/2-570 (w/o contacts)

M24308/6-550 (w/o contacts)

15

-

M24308/2-590 (float mount)

M24308/6-556 (float mount)

26

-

M24308/2-591 (float mount)

M24308/6-557 (float mount)

44

-

M24308/2-592 (float mount)

M24308/6-558 (float mount)

62

-

M24308/2-593 (float mount)

M24308/6-559 (float mount)

78

-

M24308/2-594 (float mount)

M24308/6-560 (float mount)

104

-

M24308/2-595 (float mount)

M24308/6-561 (float mount)

15

-

M24308/2-601 (float mount)

M24308/6-567 (float mount)

26

-

M24308/2-602 (float mount)

M24308/6-568 (float mount)

44

-

M24308/2-603 (float mount)

M24308/6-569 (float mount)

62

-

M24308/2-604 (float mount)

M24308/6-570 (float mount)

78

-

M24308/2-605 (float mount)

M24308/6-571 (float mount)

104

-

M24308/2-606 (float mount)

M24308/6-572 (float mount)

15

-

M24308/2-612 (float mount)

M24308/6-578 (float mount)

26

-

M24308/2-613 (float mount)

M24308/6-579 (float mount)

44

-

M24308/2-614 (float mount)

M24308/6-580 (float mount)

62

-

M24308/2-615 (float mount)

M24308/6-581 (float mount)

78

-

M24308/2-616 (float mount)

M24308/6-582 (float mount)

104

-

M24308/2-617 (float mount)

M24308/6-583 (float mount)

Plugs, Pin Contacts

Description	Non-Magnetic Controlled Low Residual Magnetism

General Purpose

Non-Magnetic

Shell Finish

Gold

Nickel

Gold

Grade

Level 1 and 2

Level 2

Level 2

Specification

GSFC S-311-P-4/07

MIL-PRF-24308/4

MIL-PRF-24308/8

Number of Contacts

Part Number

Part Number

Part Number

15

311P407-1P-B-12

M24308/4-345

M24308/8-345

26

311P407-2P-B-12

M24308/4-346

M24308/8-346

44

311P407-3P-B-12

M24308/4-347

M24308/8-347

62

311P407-4P-B-12

M24308/4-348

M24308/8-348

78

311P407-5P-B-12

M24308/4-349

M24308/8-349

104

311P407-6P-B-12

M24308/4-350

M24308/8-350

15

-

M24308/4-351 (kit)

M24308/8-351 (kit)

26

-

M24308/4-352 (kit)

M24308/8-352 (kit)

44

-

M24308/4-353 (kit)

M24308/8-353 (kit)

62

-

M24308/4-354 (kit)

M24308/8-354 (kit)

78

-

M24308/4-355 (kit)

M24308/8-355 (kit)

104

-

M24308/4-356 (kit)

M24308/8-356 (kit)

15

-

M24308/4-362 (w/o contacts)

M24308/8-362 (w/o contacts)

26

-

M24308/4-363 (w/o contacts)

M24308/8-363 (w/o contacts)

44

-

M24308/4-364 (w/o contacts)

M24308/8-364 (w/o contacts)

62

-

M24308/4-365 (w/o contacts)

M24308/8-365 (w/o contacts)

78

-

M24308/4-366 (w/o contacts)

M24308/8-366 (w/o contacts)

104

-

M24308/4-367 (w/o contacts)

M24308/8-367 (w/o contacts)

15

-

M24308/4-406 (float mount)

M24308/8-406 (float mount)

26

-

M24308/4-407 (float mount)

M24308/8-407 (float mount)

44

-

M24308/4-408 (float mount)

M24308/8-408 (float mount)

62

-

M24308/4-409 (float mount)

M24308/8-409 (float mount)

78

-

M24308/4-410 (float mount)

M24308/8-410 (float mount)

104

-

M24308/4-411 (float mount)

M24308/8-411 (float mount)

15

-

M24308/4-417 (float mount)

M24308/8-417 (float mount)

26

-

M24308/4-418 (float mount)

M24308/8-418 (float mount)

44

-

M24308/4-419 (float mount)

M24308/8-419 (float mount)

62

-

M24308/4-420 (float mount)

M24308/8-420 (float mount)

78

-

M24308/4-421 (float mount)

M24308/8-421 (float mount)

104

-

M24308/4-422 (float mount)

M24308/8-422 (float mount)

15

-

M24308/4-428 (float mount)

M24308/8-428 (float mount)

26

-

M24308/4-429 (float mount)

M24308/8-429 (float mount)

44

-

M24308/4-430 (float mount)

M24308/8-430 (float mount)

62

-

M24308/4-431 (float mount)

M24308/8-431 (float mount)

78

-

M24308/4-432 (float mount)

M24308/8-432 (float mount)

104

-

M24308/4-433 (float mount)

M24308/8-433 (float mount)

S-311-P-4/07 and MIL-DTL-24308 High Density D-Subminiature Connector

Manufacturer Listing

Click

here

for detailed information regarding part technologies offered by manufacturers listed in the

PSAP

Core Suppliers List

Listed below are links to manufacturer data sites that may provide additional part related information. The linked sites are not under the control of NPSL and NASA is not responsible for information contained in the linked site. We are providing these links for your convenience only.

AMP INC.

EISENHOWER BLVD / MS210-20

HARRISBURG, PA 17105-2608

Cage Code: 00779

Tel.: 717-564-0100

POSITRONIC INDUSTRIES INC.

429 N. CAMPBELL STREET

SPRINGFIELD, MO 65801-8247

Cage Code: 28198

Tel.: 417-866-2322

SOURIAU ET CIE (FRANCE)

3 AVENUE DU MARECHAL DEVAUX

91550 PARAY VIELLE-POSTE, FRANCE

Cage Code: F0225

Parent Organization: FRAMATOME CONNECTORS INTERNATIONAL

Tel.: 011-33-1-46-87-23-23

GSFC S-311-P-4/09 and MIL-DTL-24308 D-Subminiature Connectors

Standard Density Size 20 Crimp Contacts, -55deg.C to +125deg.C

Click Here for List of Available Parts

Important! Application Notes

Available Sources

GSFC-S-311-P-4/09 Part Number Explanation

MIL-DTL-24308 Part Number Explanation

Revision History for NASA Parts Selection Updates for This Section

Last Updated: 02/29/00

GSFC S-311-P-4/09 and MIL-DTL-24308 D-Subminiature Connectors

Standard Density Size 20 Crimp Contacts, -55deg.C to +125deg.C

APPLICATION NOTES

1) MIL-DTL-24308 connectors are supplied with 0.120" mounting holes or 0.086" float mount bushings.

2) For S-311-P-4/09 connectors, normal mounting hole diameter is 0.120". To specify a larger mounting hole diameter of 0.150", replace the "-12" in the part number with "-15". See

part number explanation

for details.

3) Hardware such as screwlocks, jackscrews, and jackposts are required to properly secure mated connector pairs and must be provided separately.

4) Connectors satisfy GSFC outgassing requirements of 1% Total Mass Loss (TML) and 0.1% Collected Volatile Condensable Material (CVCM).

5) MIL-DTL-24308 connectors are also available without contacts, with float mount bushings or as kits. Many of these part numbers are not preferred because they are cadmium plated. The preferred part numbers for the various contacts are listed herein.

6) MIL-DTL-24308 connectors are supplied with contacts. Replacement contact part numbers are M39029/63-368 for sockets and M39029/64-367 for pins.

7) GSFC connectors are supplied WITHOUT contacts. Procure P/N G10S1 for socket contacts and G10P1 for pin contacts per GSFC specification S-311-P-4/10.

Contacts are non-magnetic and do not contain color band marking.

Revision History for NASA Parts Selection List for GSFC S-311-P-4/9

02/29/00	Changed spec reference to MIL-DTL or MIL-PRF from MIL-C-24308 as appropriate
03/09/98	Corrected the Manufacturer Listing in this Section to include only Amp, ITT, Positronic and Souriau.
12/09/97	Initial Release on GSFC S-311-P-4/9 Section in the NPSL

GSFC S-311-P-4/09 D-Subminiature Connectors

Standard Density Size 20 Crimp Contacts, -55deg.C to +125deg.C

Part Number Ordering Information:

311P4	09	-X	X	-X	-XX
GSFC Specification Number	Detail Specification Sheet	Insert Arrangement	Contact Type	Residual Magnetism	Mounting Hole Size

Insert Arrangement	Contact Type	Residual Magnetism	Mounting Hole Size
1	P = Pins	B = 200 Gamma	12 = 0.120 inches
2	S = Sockets		15= 0.150 inches
3			
4			
5			

Click Here for Available Parts Listing

MIL-DTL-24308 D-Subminiature Connectors

Standard Density Size 20 Crimp Contacts, -55deg.C to +125deg.C

Part Number Ordering Information:

M24308	/X	-XXX
Military Specification Number	Detail Specification Sheet	Unique Dash Number Defining Connector Options

Detail Specification Sheet	Description
/1	Receptacle, Nickel Plated, Solder Contacts
/2	Receptacle, Nickel Plated, Crimp Contacts
/3	Plug, Nickel Plated, Solder Contacts
/4	Plug, Nickel Plated, Crimp Contacts
/5	Receptacle, Gold Plated, Solder Contacts
/6	Receptacle, Gold Plated, Solder Contacts
/7	Plug, Gold Plated, Solder Contacts
/8	Plug, Gold Plated, Crimp Contacts

Click Here for Available Parts Listing

GSFC S-311-P-4/09 and MIL-DTL-24308 D-Subminiature Connectors

Standard Density Size 20 Crimp Contacts

Insert Arrangements

Mating Face of Plug is Shown. Mating Face of Receptacle is Mirror Image

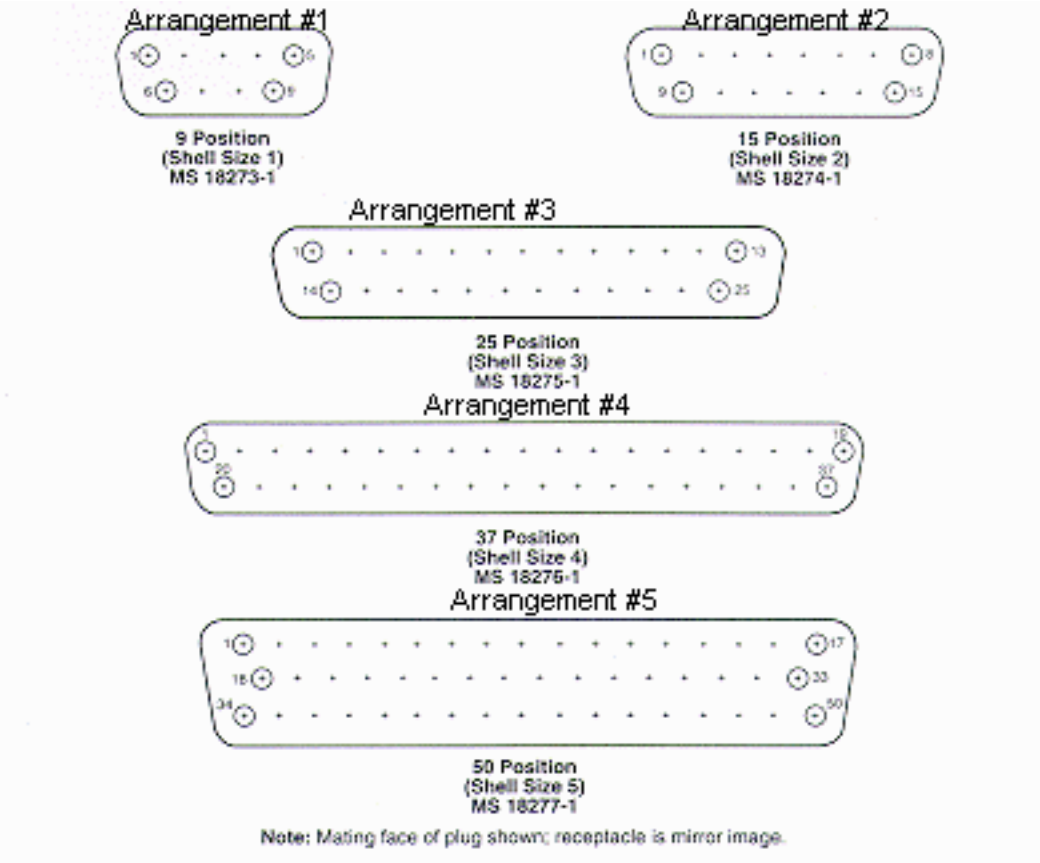

GSFC S-311-P-4/09 and MIL-DTL-24308 D-Subminiature Connectors

Standard Density Size 20 Crimp Contacts

Receptacles, Socket Contacts

Plugs, Pin Contacts

Receptacles, Socket Contacts

Description	Non-Magnetic Controlled Low Residual Magnetism		General Purpose		Non-Magnetic
Shell Finish	Gold		Nickel		Gold
Grade	Level 1 and 2		Level 2		Level 2
Specification	GSFC S-311-P-4/09		MIL-DTL-24308/2		MIL-PRF-24308/6

Number of Contacts	Part Number		Part Number		Part Number
9	311P409-1S-B-12		M24308/2-516		M24308/6-502
15	311P409-2S-B-12		M24308/2-517		M24308/6-503
25	311P409-3S-B-12		M24308/2-518		M24308/6-504
37	311P409-4S-B-12		M24308/2-519		M24308/6-505
50	311P409-5S-B-12		M24308/2-520		M24308/6-506
9	-		M24308/2-521 (kit)		M24308/6-507 (kit)
15	-		M24308/2-522 (kit)		M24308/6-508 (kit)
25	-		M24308/2-523 (kit)		M24308/6-509 (kit)
37	-		M24308/2-524 (kit)		M24308/6-510 (kit)
50	-		M24308/2-525 (kit)		M24308/6-511 (kit)
9	-		M24308/2-560 (w/o contacts)		M24308/6-540 (w/o contacts)
15	-		M24308/2-561 (w/o contacts)		M24308/6-541 (w/o contacts)
25	-		M24308/2-562 (w/o contacts)		M24308/6-542 (w/o contacts)
37	-		M24308/2-563 (w/o contacts)		M24308/6-543 (w/o contacts)
50	-		M24308/2-564 (w/o contacts)		M24308/6-544 (w/o contacts)
9	-		M24308/2-585 (float mount)		M24308/6-551 (float mount)
15	-		M24308/2-586 (float mount)		M24308/6-552 (float mount)
25	-		M24308/2-587 (float mount)		M24308/6-553 (float mount)
37	-		M24308/2-588 (float mount)		M24308/6-554 (float mount)
50	-		M24308/2-589 (float mount)		M24308/6-555 (float mount)
9	-		M24308/2-596 (float mount)		M24308/6-562 (float mount)
15	-		M24308/2-597 (float mount)		M24308/6-563 (float mount)
25	-		M24308/2-598 (float mount)		M24308/6-564 (float mount)
37	-		M24308/2-599 (float mount)		M24308/6-565 (float mount)
50	-		M24308/2-600 (float mount)		M24308/6-566 (float mount)
9	-		M24308/2-607 (float mount)		M24308/6-573 (float mount)
15	-		M24308/2-608 (float mount)		M24308/6-574 (float mount)
25	-		M24308/2-609 (float mount)		M24308/6-575 (float mount)
37	-		M24308/2-610 (float mount)		M24308/6-576 (float mount)
50	-		M24308/2-611 (float mount)		M24308/6-577 (float mount)

Plugs, Pin Contacts

Description	Non-Magnetic Controlled Low Residual Magnetism		General Purpose		Non-Magnetic
Shell Finish	Gold		Nickel		Gold
Grade	Level 1 and 2		Level 2		Level 2
Specification	GSFC S-311-P-4/09		MIL-DTL-24308/4		MIL-DTL-24308/8
Number of Contacts	Part Number		Part Number		Part Number
9	311P409-1P-B-12		M24308/4-335		M24308/8-335
15	311P409-2P-B-12		M24308/4-336		M24308/8-336
25	311P409-3P-B-12		M24308/4-337		M24308/8-337
37	311P409-4P-B-12		M24308/4-338		M24308/8-338
50	311P409-5P-B-12		M24308/4-339		M24308/8-339
9	-		M24308/4-340 (kit)		M24308/8-340 (kit)

15	-		M24308/4-341 (kit)		M24308/8-341 (kit)
25	-		M24308/4-342 (kit)		M24308/8-342 (kit)
37	-		M24308/4-343 (kit)		M24308/8-343 (kit)
50	-		M24308/4-344 (kit)		M24308/8-344 (kit)
9	-		M24308/4-357 (w/o contacts)		M24308/8-357 (w/o contacts)
15	-		M24308/4-358 (w/o contacts)		M24308/8-358 (w/o contacts)
25	-		M24308/4-359 (w/o contacts)		M24308/8-359 (w/o contacts)
37	-		M24308/4-360 (w/o contacts)		M24308/8-360 (w/o contacts)
50	-		M24308/4-361 (w/o contacts)		M24308/8-361 (w/o contacts)
9	-		M24308/4-401 (float mount)		M24308/8-401 (float mount)
15	-		M24308/4-402 (float mount)		M24308/8-402 (float mount)
25	-		M24308/4-403 (float mount)		M24308/8-403 (float mount)
37	-		M24308/4-404 (float mount)		M24308/8-404 (float mount)
50	-		M24308/4-405 (float mount)		M24308/8-405 (float mount)
9	-		M24308/4-412 (float mount)		M24308/8-412 (float mount)
15	-		M24308/4-413 (float mount)		M24308/8-413 (float mount)
25	-		M24308/4-414 (float mount)		M24308/8-414 (float mount)
37	-		M24308/4-415 (float mount)		M24308/8-415 (float mount)
50	-		M24308/4-416 (float mount)		M24308/8-416 (float mount)
9	-		M24308/4-423 (float mount)		M24308/8-423 (float mount)
15	-		M24308/4-424 (float mount)		M24308/8-424 (float mount)
25	-		M24308/4-425 (float mount)		M24308/8-425 (float mount)
37	-		M24308/4-426 (float mount)		M24308/8-426 (float mount)
50	-		M24308/4-427 (float mount)		M24308/8-427 (float mount)

S-311-P-4/09 and MIL-DTL-24308 D-Subminiature Connector Manufacturer Listing

And Links to Manufacturer Homepages

Click

here

for detailed information regarding part technologies offered by manufacturers listed in the

PSAP

Core Suppliers List

Listed below are links to manufacturer data sites that may provide additional part related information. The linked sites are not under the control of NPSL and NASA is not responsible for information contained in the linked site. We are providing these links for your convenience only.

AMP INC.

EISENHOWER BLVD / MS210-20

HARRISBURG, PA 17105-2608

CAGE Code: 00779

Tel.: 717-564-0100

ITT CANNON

666 EAST DYER RD

SANTA ANA, CA 92705

CAGE Code: 71468

Tel.: 714-557-4700

POSITRONIC INDUSTRIES INC.

429 N. CAMPBELL STREET

SPRINGFIELD, MO 65801-8247

CAGE Code: 28198

Tel.: 417-866-2322

SOURIAU ET CIE (FRANCE)

3 AVENUE DU MARECHAL DEVAUX

91550 PARAY VIELLE-POSTE, FRANCE

CAGE Code: F0225

Parent Organization: FRAMATOME CONNECTORS INTERNATIONAL

Tel.: 011-33-1-46-87-23-23

RF Connectors

The following RF connector types are available for selection:

Type Designation	Description	Specification
M39012/XX	Coaxial, Radio Frequency, Series SMA	MIL-C-39012
M83517/X	Transmission Line, Radio Frequency, Series SMA	MIL-C-8351

Parts

|

Packaging

|

Radiation

|

Publications

|

Calendar

|

Experts

Admin Login

|

Request Account

|

Feedback

|

Site Map

|

Help

|

Search

NEPP Program Manager:

Chuck Barnes, Jet Propulsion Laboratory

Responsible NASA Official:

Michael Sampson, NEPAG Manager

Website Comments:

Web Development Team

Last Modified:

August 8, 2001

AETD IT Security Banner

NASA Privacy Statement

Go to -

NEPP

|

NPSL

|

Connectors

MIL-DTL-39012 Radio Frequency Connectors

Part Number/Ordering Explanation

Important! Application Notes

Available Sources

Revision History for NASA Parts Selection List for MIL-DTL-39012

Last Updated: 02/29/00

Click on the Link Below to View the Associated Parts Listing:

Detail Specification	Configuration
M39012/55	Plug, Pin Contact, Cable Mount
M39012/56	Plug, Pin Contact, Right Angle Cable Mount
M39012/57	Receptacle, Socket Contact, Cable Mount
M39012/58	Receptacle, Socket Contact, 4 Hole Flange Mount
M39012/59	Receptacle, Socket Contact, D-Hole Jam Nut Mount
M39012/60	Receptacle, Socket Contact, Solder Cup, 4-Hole or 2-Hole Rear Flange Mount
M39012/61	Receptacle, Socket Contact, Solder Cup, Rear or Front D-Hole Jam Nut Mount
M39012/62	Receptacle, Socket Contact, Hermetic Seal, Solder Lug Rear or Front D-Hole Jam Nut Mount
M39012/79	Plug, Pin Contact, Cable Mount, Semirigid Cable
M39012/80	Plug, Pin Contact, Right Angle Cable Mount, Semirigid Cable
M39012/81	Receptacle, Socket Contact, Cable Mount, Semirigid Cable
M39012/82	Receptacle, Socket Contact, 4-Hole or 2-Hole Flange Mount, Semirigid Cable
M39012/83	Receptacle, Socket Contact, Rear D-Hole Jam Nut Mount, Semirigid Cable
M39012/93	Receptacle, Socket Contact, PC Board Mount
M39012/94	Receptacle, Socket Contact, PC Board Mount, Right Angle

MIL-DTL-39012 Radio Frequency Connectors

APPLICATION NOTES

1) Plug coupling nuts and cable nut mounted connectors may have silicone rubber O-Ring seals which are an outgassing concern. Connectors may require additional processing for outgassing control. This should include a bake of the connector and removal or replacement of the silicone rubber O-Rings with fluorosilicone

O-Rings which meet outgassing requirements.

2) Temperature range for flexible and semirigid connectors is -65deg.C to +165deg.C. Temperature range for PC mounted connectors is -65deg.C to +105deg.C.

3) The use of safety wire is recommended to secure mated connectors together.

4) B designated connectors which require special tooling for assembly are considered non-field

replaceable and are not preferred. Most are inactive for new design.

5) Only series SMA connectors are recommended for satellite use in lower earth orbits. Series N and TNC connectors are not recommended for use in lower earth orbits due to atomic oxygen corrosion concerns of their silver plating.

Revision History for NASA Parts Selection List for MIL-DTL-39012 Connectors

02/29/00	Changed specification reference to "MIL-DTL-39012" from "MIL-C-39012"
03/16/98	Added application note #5 regarding atomic oxygen concerns with Series N and TNC connectors in lower earth orbit.
03/09/98	Removed Cristek from list of available sources. Cristek does not make M39012 connectors
03/04/98	Initial Release of MIL-C-39012 Connector Section on the NPSL On-Line

MIL-DTL-39012 Radio Frequency Connectors

SMA Series Coaxial, 50 Ohms

Part Number Ordering Information:

Example of P/N: M39012/55-3006, where

M39012	/55	-	3006
Military Specification Number	Detail Specification	Replaceability	Dash Number

Detail Specification	Gender	Application
M39012/55	Plug, Pin Contact	Flexible Cable
M39012/56	Plug, Pin Contact	Flexible Cable
M39012/57	Receptacle, Socket Contact	Flexible Cable
M39012/58	Receptacle, Socket Contact	Flexible Cable, Box or Panel Mount
M39012/59	Receptacle, Socket Contact	Flexible Cable, Box or Panel Mount
M39012/60	Receptacle, Socket Contact	Flexible Cable, Box or Panel Mount
M39012/61	Receptacle, Socket Contact	Flexible Cable, Box or Panel Mount
M39012/62	Receptacle, Socket Contact, Hermetic Seal	Flexible Cable, Box or Panel Mount
M39012/79	Plug, Pin Contact	Semi-Rigid Cable
M39012/80	Plug, Pin Contact	Semi-Rigid Cable
M39012/81	Receptacle, Socket Contact	Semi-Rigid Cable
M39012/82	Receptacle, Socket Contact	Semi-Rigid Cable
M39012/83	Receptacle, Socket Contact	Semi-Rigid Cable
M39012/93	Receptacle, Socket Contact	Printed Circuit
M39012/94	Receptacle, Socket Contact	Printed Circuit

Replaceability Character	Description
-	Field Replaceable (Standard)
B	Non-Field Replaceable (Not Preferred)

Dash Number	Description
3XXX	Corrosion Resistant Steel Shell, Passivated Finish
4XXX	Beryllium Copper Shell, Gold Finish

MIL-PRF-39012/55 Radio Frequency Connectors

Plug, Pin Contact, Cable Mount

Maximum Frequency = 12.4 GHz

M17/93-RG178

M39012/55-4006

M17/93-RG178

M39012/55-4025

M17/93-RG178

M39012/55-3007

M17/113-RG316

M39012/55-3026

M17/113-RG316

M39012/55-4007

M17/113-RG316

M39012/55-4026

M17/113-RG316

M39012/55-3009

M17/60-RG142

M39012/55-3028

M17/60-RG142

M39012/55-4009

M17/60-RG142

M39012/55-4028

M17/60-RG142

M39012/55-3010

M17/111-RG303

M39012/55-3029

M17/111-RG303

M39012/55-4010

M17/111-RG303

M39012/55-4029

M17/111-RG303

M39012/55-3030

M17/152-00001

M39012/55-3502

M17/128-RG400

M39012/55-4502

M17/128-RG400

Part Number	Applicable Flexible Cable Type
M39012/55-3006	M17/93-RG178
M39012/55-3025	

MIL-PRF-39012/56 Radio Frequency Connectors

Plug, Pin Contact, Right Angle Cable Mount

Maximum Frequency = 12.4 GHz

Part Number	Applicable Flexible Cable Type
M39012/56-3006	M17/93-RG178
M39012/56-3025	M17/93-RG178
M39012/56-4006	M17/93-RG178
M39012/56-4025	M17/93-RG178
M39012/56-3007	M17/113-RG316
M39012/56-3026	M17/113-RG316
M39012/56-4007	M17/113-RG316
M39012/56-4026	M17/113-RG316
M39012/56-3009	M17/60-RG142
M39012/56-3028	M17/60-RG142
M39012/56-4009	M17/60-RG142
M39012/56-4028	M17/60-RG142
M39012/56-3010	M17/111-RG303
M39012/56-3029	M17/111-RG303
M39012/56-4010	M17/111-RG303
M39012/56-4029	M17/111-RG303
M39012/56-3030	M17/152-00001
M39012/56-3502	M17/128-RG400
M39012/56-4502	M17/128-RG400

MIL-PRF-39012/57 Radio Frequency Connectors

Receptacle, Socket Contact, Cable Mount

Maximum Frequency = 12.4 GHz

Part Number	Applicable Flexible Cable Type
M39012/57-3006	M17/93-RG178
M39012/57-3025	M17/93-RG178
M39012/57-4006	M17/93-RG178
M39012/57-4025	M17/93-RG178
M39012/57-3007	M17/113-RG316
M39012/57-3026	M17/113-RG316
M39012/57-4007	M17/113-RG316

M39012/57-4026	M17/113-RG316
M39012/57-3009	M17/60-RG142
M39012/57-3028	M17/60-RG142
M39012/57-4009	M17/60-RG142
M39012/57-4028	M17/60-RG142
M39012/57-3010	M17/111-RG303
M39012/57-3029	M17/111-RG303
M39012/57-4010	M17/111-RG303
M39012/57-4029	M17/111-RG303
M39012/57-3030	M17/152-00001
M39012/57-3502	M17/128-RG400
M39012/57-4502	M17/128-RG400

MIL-PRF-39012/58 Radio Frequency Connectors

Receptacle, Socket Contact, 4-Hole Flange Mount

Maximum Frequency = 12.4 GHz

Part Number	Applicable Flexible Cable Type
M39012/58-3006	M17/93-RG178
M39012/58-3025	M17/93-RG178
M39012/58-4006	M17/93-RG178
M39012/58-4025	M17/93-RG178
M39012/58-3007	M17/113-RG316
M39012/58-3026	M17/113-RG316
M39012/58-4007	M17/113-RG316
M39012/58-4026	M17/113-RG316
M39012/58-3009	M17/60-RG142
M39012/58-3028	M17/60-RG142
M39012/58-4009	M17/60-RG142
M39012/58-4028	M17/60-RG142
M39012/58-3010	M17/111-RG303
M39012/58-3029	M17/111-RG303
M39012/58-4010	M17/111-RG303
M39012/58-4029	M17/111-RG303
M39012/58-3030	M17/152-00001
M39012/58-3502	M17/128-RG400
M39012/58-4502	M17/128-RG400

MIL-PRF-39012/59 Radio Frequency Connectors

Receptacle, Socket Contact, D-Hole Jam Nut Mount

Maximum Frequency = 12.4 GHz

Part Number	Applicable Flexible Cable Type
M39012/59-3006	M17/93-RG178
M39012/59-3025	M17/93-RG178
M39012/59-4006	M17/93-RG178
M39012/59-4025	M17/93-RG178
M39012/59-3007	M17/113-RG316
M39012/59-3026	M17/113-RG316
M39012/59-4007	M17/113-RG316
M39012/59-4026	M17/113-RG316
M39012/59-3009	M17/60-RG142
M39012/59-3028	M17/60-RG142
M39012/59-4009	M17/60-RG142
M39012/59-4028	M17/60-RG142
M39012/59-3010	M17/111-RG303
M39012/59-3029	M17/111-RG303
M39012/59-4010	M17/111-RG303
M39012/59-4029	M17/111-RG303
M39012/59-3030	M17/152-00001
M39012/59-3502	M17/128-RG400
M39012/59-4502	M17/128-RG400

MIL-PRF-39012/60 Radio Frequency Connectors

Receptacle, Socket Contact, Solder Cup, Rear Flange Mount

Maximum Frequency = Not Rated

Part Number

Applicable Cable Type

Flange Configuration

M39012/60-3001

All Flexible Cable Types

4 Hole

M39012/60-4001

All Flexible Cable Types

4 Hole

M39012/60-3002

All Flexible Cable Types

2 Hole

MIL-PRF-39012/61 Radio Frequency Connectors

Receptacle, Socket Contact, Solder Cup, Rear or Front Mount

D-Hole Jam Nut Mount

Maximum Frequency = Not Rated

Part Number

Applicable Cable Type

Mount Configuration

M39012/61-3001

All Flexible Cable Types

Rear Mount

M39012/61-4001

All Flexible Cable Types

Rear Mount

M39012/61-3002

All Flexible Cable Types

Front Mount

M39012/61-4002

All Flexible Cable Types

Front Mount

MIL-PRF-39012/62 Radio Frequency Connectors

Receptacle, Socket Contact, Hermetic Seal, Solder Lug

Rear or Front D-Hole Jam Nut Mount

Maximum Frequency = Not Rated

Part Number

Applicable Cable Type

Mount Configuration

M39012/62-3001

All Flexible Cable Types

Rear Mount

M39012/62-4001

All Flexible Cable Types

Rear Mount

M39012/62-3002

All Flexible Cable Types

Front Mount

M39012/62-4002

All Flexible Cable Types

Front Mount

MIL-PRF-39012/79 Radio Frequency Connectors

Plug, Pin Contact, Cable Mount, Semirigid Cable

Maximum Frequency = 18 GHz

Part Number	Applicable Semi-Rigid Cable Type
M39012/79-3009	M17/133-RG405
M39012/79-3007	M17/133-RG405
M39012/79-3207	M17/133-RG405
M39012/79-3010	M17/130-RG402
M39012/79-3008	M17/130-RG402
M39012/79-3208	M17/130-RG402

MIL-PRF-39012/80 Radio Frequency Connectors

Plug, Pin Contact, Right Angle Cable Mount, Semirigid Cable

Maximum Frequency = 18 GHz

Part Number	Applicable Semi-Rigid Cable Type
M39012/80-3009	M17/133-RG405
M39012/80-3005	M17/133-RG405
M39012/80-3007	M17/133-RG405
M39012/80-3207	M17/133-RG405
M39012/80-3010	M17/130-RG402
M39012/80-3006	M17/130-RG402
M39012/80-3008	M17/130-RG402
M39012/80-3208	M17/130-RG402

MIL-PRF

-39012/81 Radio Frequency Connectors

Receptacle, Socket Contact, Cable Mount, Semirigid Cable

Maximum Frequency = 18 GHz

Part Number Applicable Semi-Rigid Cable Type	
M39012/81-3007	M17/133-RG405
M39012/81-3011	M17/133-RG405
M39012/81-3207	M17/133-RG405
M39012/81-3008	M17/130-RG402
M39012/81-3012	M17/130-RG402
M39012/81-3208	M17/130-RG402

MIL-PRF-39012/82 Radio Frequency Connectors

Receptacle, Socket Contact, 4-Hole or 2 Hole Flange Mount, Semirigid Cable

Maximum Frequency = 18 GHz

Part Number	Applicable Semi-Rigid Cable Type	Flange Configuration
M39012/82-3007	M17/133-RG405	4-Hole
M39012/82-3011	M17/133-RG405	4-Hole
M39012/82-3207	M17/133-RG405	4-Hole
M39012/82-3013	M17/133-RG405	2-Hole
M39012/82-3008	M17/130-RG402	4-Hole
M39012/82-3012	M17/130-RG402	4-Hole
M39012/82-3208	M17/130-RG402	4-Hole
M39012/82-3014	M17/130-RG402	2-Hole

MIL-PRF-39012/83 Radio Frequency Connectors

Receptacle, Socket Contact, Rear D-Hole Jam Nut Mount, Semirigid Cable

Maximum Frequency = 18 GHz

Part Number	Applicable Semi-Rigid Cable Type
M39012/83-3009	M17/133-RG405
M39012/83-3007	M17/133-RG405
M39012/83-3011	M17/133-RG405
M39012/83-3207	M17/133-RG405
M39012/83-3010	M17/130-RG402
M39012/83-3008	M17/130-RG402
M39012/83-3012	M17/130-RG402
M39012/83-3208	M17/130-RG402

MIL-PRF-39012/93 Radio Frequency Connectors

Receptacle, Socket Contact, PC Board Mount

Frequency = 500 MHz to 18 GHz

Part Number	Application	Solder Terminal Type
M39012/93-3001	PC Board Mount	.155L
M39012/93-3002	PC Board Mount	.125L
M39012/93-3003	PC Board Mount	.093L

MIL-PRF-39012/94 Radio Frequency Connectors

Receptacle, Socket Contact, PC Board Mount, Right Angle

Frequency = 500 MHz to 18 GHz

Part Number	Application	Solder Terminal Type
M39012/94-3001	PC Board Mount	.155L
M39012/94-3002	PC Board Mount	.125L
M39012/94-3003	PC Board Mount	.093L

MIL-DTL-39012 Radio Frequency Connector Manufacturer Listing

And Links to Manufacturer Homepages

Click

here

for detailed information regarding part technologies offered by manufacturers listed in the

PSAP

Core Suppliers List

Listed below are links to manufacturer data sites that may provide additional part related information. The linked sites are not under the control of NPSL and NASA is not responsible for information contained in the linked site. We are providing these links for your convenience only.

AMPHENOL AEROSPACE - RF MICROWAVE CONNECTOR OPERATIONS

ONE KENNEDY AVENUE

DANBURY, CT 06810

Cage Code: 74868

Tel.: 1-800-627-7100

APPLIED ENGINEERING PRODUCTS

104 JOHN W. MURPHY DRIVE

NEW HAVEN, CT 06513

Cage Code: 19505

Tel: 203-776-2813

AUTOMATIC CONNECTOR, INC.

400 MORELAND ROAD

COMMACK, L.I., NY 11725

Cage Code: 94375

Tel.: 516-543-5000

CONNECTING DEVICES, INC. (CDI)

2400 GRAND AVENUE

LONG BEACH, CA 92619

Cage Code: 30990

Tel.: 213-498-0901

DELTA ELECTRONICS MANUFACTURING CORP.

416 CABOT STREET

BEVERLY, MA 01915

Cage Code: 00795

Tel.: 978-927-1060

HERMETIC SEAL CORP.
4232 TEMPLE CITY BLVD.
ROSEMEAD, CA 91770-1552
Cage Code: 04820
Tel.: 213-283-0411
ITT CANNON RF PRODUCTS (FORMERLY ITT SEALECTRO)
585 E. MAIN STREET
NEW BRITAIN, CT 06051
Cage Code: 98291
Tel.: 860-223-2700
KINGS ELECTRONICS COMPANY, INC.
40 MARBLEDALE ROAD
TUCKAHOE, NY 10707
Cage Code: 91836
Tel.: 213-596-4485
M/A COM, INC.- INTERCONNECT DIVISION (FORMERLY OMNI-SPECTRA)
140 FOURTH AVENUE
WALTHAM, MA 02254
Cage Code: 26805
Tel.: 617-890-4570
RADIALL, INC.
150 LONG BEACH BOULEVARD
STRATFORD, CT 06497
Cage Code: F0503
Tel.: 203-386-1030
SOLITRON/VECTOR MICROWAVE PRODUCTS, INC.
3301 ELECTRONICS WAY
WAST PALM BEACH, FL 33407-4697
Cage Code: 95077
Tel.: 407-848-4311

Capacitors

Circuit Protection Devices

Fuses

Connectors

Filters

Inductors

Microcircuits

NEW!

Monolithics

Hybrids

Resistors

Semiconductors

(Summary)

Diodes

Transistors

Thermistors

Wire and Cable

Microminiature Connectors

The following microminiature connector types are available for selection:

Type Designation	Description	Specification
M83513/XX	Microminiature, Pre-Wiped Crimp Contacts, Solder Contacts or Printed Circuit Connectors	MIL-PRF-83513

Parts

|

Packaging

|

Radiation

|

Publications

|

Calendar

|

Experts

Admin Login

|

Request Account

|

Feedback

|

Site Map

|

Help

|

Search

NEPP Program Manager:

Chuck Barnes, Jet Propulsion Laboratory

Responsible NASA Official:

Michael Sampson, NEPAG Manager

Website Comments:

Web Development Team

Last Modified:

August 8, 2001

AETD IT Security Banner

NASA Privacy Statement

Go to -

NEPP

|

NPSL

|

Connectors

MIL-PRF-83513 Microminiature Connectors

Part Number/Ordering Explanation for Crimp or Solder Contacts

Part Number/Ordering Explanation for Printed Circuit Connectors

Important! Application Notes

Available Sources

Recent NASA Parts Selection List Updates for MIL-PRF-83513

Last Updated: 01/14/04

MIL-PRF-83513 Microminiature Connectors

APPLICATION NOTES

1) CAUTION!!!

Some M83513 type connectors have the option of being supplied with pre-terminated crosslinked ETFE (Tefzel) insulated wire pigtails. Users are advised thate some fluoropolymer insulation materials such as ETFE may outgas trace amounts of fluorine over time. NASA GSFC Advisory

NA-GSFC-2003-03

(Dec. 2002) addresses corrosion concerns for metal shell connectors (especially microminiature and nanominiature types) and contacts that are terminated with

fluoropolymer insulated wire

AND

stored in sealed plastic/metal bags for several months or longer

. In sealed packages, Fluorine that is outgassed may react with moisture to form highly corrosive hydrofluoric acid. This acid is capable of corroding metals such as Nickel and Gold which are commonly used finishes for spaceflight connectors and contacts.

As a precaution for all flight hardware with pre-wired connector assemblies, the following mitigations are recommended by NA-GSFC-2003-03:

Projects should inspect the connectors upon receipt (both the shell and contacts) using appropriate magnification to verify that there is no corrosion. The existing inventory of pre-wired connector assemblies should be reinspected. In addition, all assemblies should be inspected before use. Inspect for darkening of the shiny metal surfaces. All connector interfaces should be covered with protective dust covers. For assemblies that have already been integrated into flight hardware and that were inspected and found to be acceptable before mating, there should be no concern for subsequent malfunction.

The pre-wired connector assemblies should be removed from sealed bags and stored in open packages that will allow any reactive fluorine compound (s) to escape. Connector assemblies should be stored in a controlled humidity environment. The preferable storage area for pre-wired connector assemblies would be in a dry nitrogen atmosphere.

2

) Connectors are preferred for use in Level 2 applications. The following additional testing is recommended for Level 1 applications:

100% Dielectric Withstanding Voltage and Insulation Resistance followed by

10 Cycles of Thermal Shock

Low Level Contact Resistance on One Sample Connector

3)

MIL-PRF-83513 metal shell receptacle connectors contain a thin silicone rubber or fluorosilicone rubber interface seal. The silicone rubber type may represent an outgassing concern. The seals are pressed in place and may be carefully removed to avoid outgassing. Otherwise, additional processing such as a bake may be required to control outgassing. All other materials have good outgassing characteristics.

4) All contacts are on .050 inch centers between contacts and are size 24. PC terminations are solid No. 24 AWG copper wire.

5) MIL-PRF-83513/10 through /15 narrow profile printed circuit connectors have contact terminations arranged so that additional rows are used in order to reduce overall connector length. Clearance for additional rows of right angle leads is accomplished by the manufacturer orienting the insert 180deg. from normal so that the wide row becomes the bottom row rather than the top row.

6) Metal shell connectors are not intermateable with plastic shell connectors.

7) For MIL-PRF-83513/1 through /4 and /6 through /9, mounting hardware must be supplied separately. For insert arrangements A through G, use MIL-PRF-83513/5 configurations A or B. For insert arrangement H, use MIL-PRF-83513/5 configuration C.

8) For connectors supplied with wire pigtails:

In a memo dated October 27, 1997, DSCC granted permission to all MIL-PRF-83513 QPL manufacturers to supply /3 and /4 connectors with M22759/11-26-X PTFE Teflon insulated wire when shell finish "N" is specified. Previously, the specifications were interpreted to mean that when finish "N" and M22759/11-26-X are specified, M22759/33-26-X would be provided in lieu of M22759/11-26-X.

For space flight the appropriate dash numbers that specify M22759/33-26-X should be selected over M22759/11-26-X.

The use of M22759/11-26-X PTFE Teflon insulated wire represents a few problems for space flight use:

a) PTFE Teflon insulation is more susceptible to cold flow phenomena and has poor cut through resistance.

b) PTFE Teflon insulated wire is not as tolerant of radiation environments as crosslinked ETFE insulated wire (M22759/33).

c) M22759/11-26-X wire has normal strength copper conductor, where M22759/33-26-X has high strength copper alloy conductor. NASA prefers the use of high strength copper for sizes 24 AWG and smaller in space environments. Normal strength copper may be more susceptible to wire strand breakage when exposed to severe temperature cycling.

9) Connectors terminated with 26 AWG leads may not meet design standards of NASA Technical Standard NASA-STD-8739.4 which prefers the use of 24 AWG or larger conductors in interconnect cables.

10) Optional color coding in accordance with

MIL-STD-681

, as modified by detail specification, may be used.

11) Insert arrangement Code H (100 contacts) is not applicable to plastic shell connectors (M83513/6 through M83513/9).

Recent NASA Parts Selection List Updates for MIL-PRF-83513 Connectors

01/14/04	Added Application Note (ref: NASA GSFC Advisory NA-GSFC-2003-03) on subject of Corrosion of Connectors and Contacts Due to Outgassing of Fluorine Compounds from Fluoropolymer Insulated Wire
05/24/99	Updated sections to indicate specification change to a "performance based" specification. This change affects the specification number (ie., MIL-C-83513 becomes MIL-PRF-83513). Military specification
03/31/98	Modified application Note #8 to correctly identify NASA-STD-8739.4 rather than NTS8739.(3G-2)
03/13/98	Initial Release of MIL-C-83513 Connector Section in the NPSL On-Line

MIL-PRF-83513 Microminiature Connector

Pre-Terminated Crimp Contacts or Solder Contacts

Part Number Ordering Information:

Example of P/N for Solder Contacts: M83513/01-AN,

M83513	/01	-A	N
Military Specification Number	Specification Slash Sheet	Insert Arrangement	Shell Finish

Example of P/N for Wire Pigtails: M83513/03-A01N

M83513	/03	-A	01	N
Military Specification Number	Specification Slash Sheet	Insert Arrangement	Wire Type (Not applicable to Solder Contacts)	Shell Finish

Detail Specification	Connector Type	Termination	Shell
M83513/01	Plug, Pin Contacts	Soldercup	Aluminum, Electroless Nickel Plated
M83513/02	Receptacle, Socket Contacts	Soldercup	Aluminum, Electroless Nickel Plated
M83513/03	Plug, Pin Contacts	Wire Pigtails	Aluminum, Electroless Nickel Plated
M83513/04	Receptacle, Socket Contacts	Wire Pigtails	Aluminum, Electroless Nickel Plated
M83513/06	Plug, Pin Contacts	Soldercup	All Plastic
M83513/07	Receptacle, Socket Contacts	Soldercup	All Plastic
M83513/08	Plug, Pin Contacts	Wire Pigtails	All Plastic
M83513/09	Receptacle, Socket Contacts	Wire Pigtails	All Plastic

Insert Arrangement Code (Click Here to See Insert Arrangements)	Number of Contacts
A	9

B	15
C	21
D	25
E	31
F	37
G	51
H	100

Wire Pigtail Termination Code	Pigtail Wire Specification	Length
01	M22759/11-26-9 (NOT PREFERRED FOR FLIGHT. USE TYPE "09" FOR FLIGHT)	18"L
02	M22759/11-26-9 (NOT PREFERRED FOR FLIGHT. USE TYPE "10" FOR FLIGHT)	36"L
03	M22759/11-26-X (NOT PREFERRED FOR FLIGHT. USE TYPE "11" FOR FLIGHT)	18"L
04	M22759/11-26-X (NOT PREFERRED FOR FLIGHT. USE TYPE "12" FOR FLIGHT)	36"L
05	QQ-W-343, Solid 25 AWG, Gold Plated	0.5"L
06	QQ-W-343, Solid 25 AWG, Gold Plated	1.0"L
07	QQ-W-343, Solid 25 AWG, Tin Plated	0.5"L
08	QQ-W-343, Solid 25 AWG, Tin Plated	1.0"L
09	M22759/33-26-9	18"L
10	M22759/33-26-9	36"L
11	M22759/33-26-X	18"L
12	M22759/33-26-X	36"L
13	M22759/11-26-9 (NOT PREFERRED FOR FLIGHT. USE TYPE "15" FOR FLIGHT)	72"L
14	M22759/11-26-X (NOT PREFERRED FOR FLIGHT. USE TYPE "16" FOR FLIGHT)	72"L
15	M22759/33-26-9	72"L
16	M22759/33-26-X	72"L

Shell Finish Code	Description
Blank	All Plastic
N	Electroless Nickel

MIL-PRF-83513 Microminiature Connector

Printed Circuit Connectors

Part Number Ordering Information:

Example of P/N: M83513/10-A01NP, where

M83513	/01	-A	01	N	P
Military Specification Number	Specification Slash Sheet	Insert Arrangement	PC Termination Length	Shell Finish	Hardware

Detail Specification	Connector Type	Mounting	Applicable Insert Arrangements

M83513/10	Plug, Pin Contacts, Narrow Profile	Right Angle	A, B, C, D, E, F
M83513/11	Plug, Pin Contacts, Narrow Profile	Right Angle	G
M83513/12	Plug, Pin Contacts, Narrow Profile	Right Angle	H
M83513/13	Receptacle, Socket Contacts, Narrow Profile	Right Angle	A, B, C, D, E, F
M83513/14	Receptacle, Socket Contacts, Narrow Profile	Right Angle	G
M83513/15	Receptacle, Socket Contacts, Narrow Profile	Right Angle	H
M83513/16	Plug, Pin Contacts, Standard Profile	Right Angle	A, B, C, D, E, F
M83513/17	Plug, Pin Contacts, Standard Profile	Right Angle	G
M83513/18	Plug, Pin Contacts, Standard Profile	Right Angle	H
M83513/19	Receptacle, Socket Contacts, Standard Profile	Right Angle	A, B, C, D, E, F
M83513/20	Receptacle, Socket Contacts, Standard Profile	Right Angle	G
M83513/21	Receptacle, Socket Contacts, Standard Profile	Right Angle	H
M83513/22	Plug, Pin Contacts, Standard Profile	Straight	A, B, C, D, E, F
M83513/23	Plug, Pin Contacts, Standard Profile	Straight	G
M83513/24	Plug, Pin Contacts, Standard Profile	Straight	H
M83513/25	Receptacle, Socket Contacts, Standard Profile	Straight	A, B, C, D, E, F
M83513/26	Receptacle, Socket Contacts, Standard Profile	Straight	G
M83513/27	Receptacle, Socket Contacts, Standard Profile	Straight	H

Insert Arrangement Code (Click Here to See Insert Arrangements)	Number of Contacts
A	9
B	15
C	21
D	25
E	31
F	37
G	51
H	100

PC Termination Length Code	Length (Inches)
01	0.109L
02	0.140L
03	0.172L

Shell Finish Code	Description
N	Electroless Nickel

Hardware Code	Description
N	No Jackpost

P	Jackpost (Attached)

MIL-PRF-83513 Microminiature Connector

Pre-Terminated Crimp Contacts or Solder Contacts

Insert Arrangements

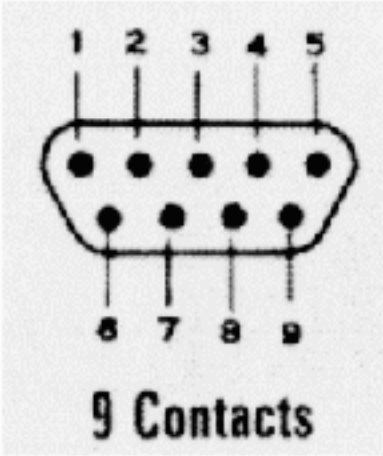

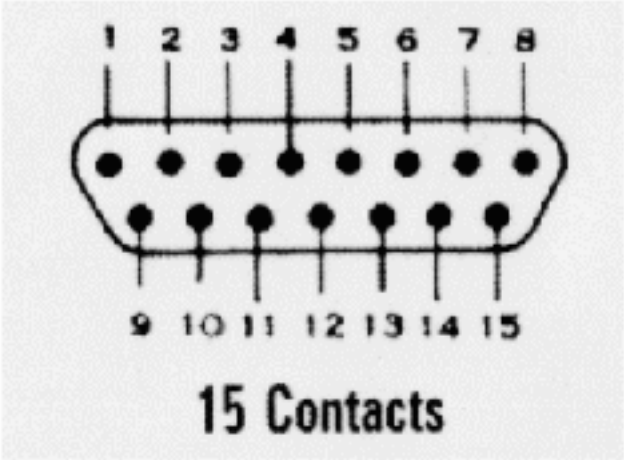
1 2 3 4 5 6 7 8
9 10 11 12 13 14 15
15 Contacts

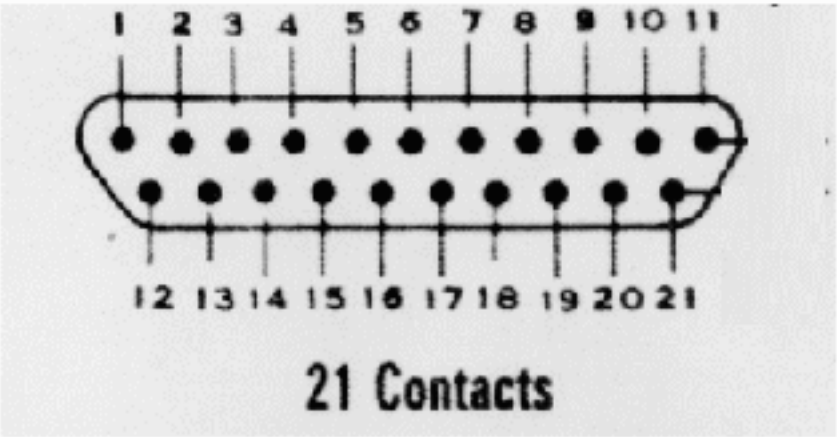
1 2 3 4 5 6 7 8 9 10 11
12 13 14 15 16 17 18 19 20 21
21 Contacts

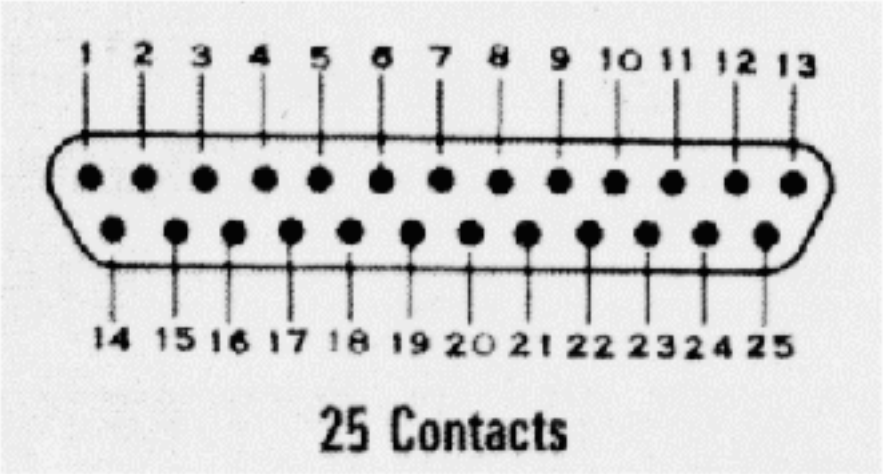
1 2 3 4 5 6 7 8 9 10 11 12 13
14 15 16 17 18 19 20 21 22 23 24 25
25 Contacts

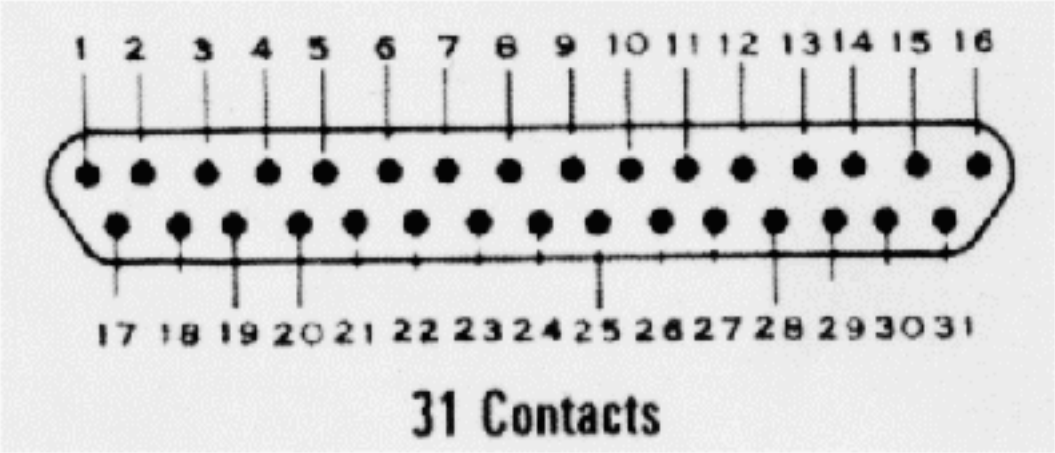
1 2 3 4 5 6 7 8 9 10 11 12 13 14 15 16
17 18 19 20 21 22 23 24 25 26 27 28 29 30 31
31 Contacts

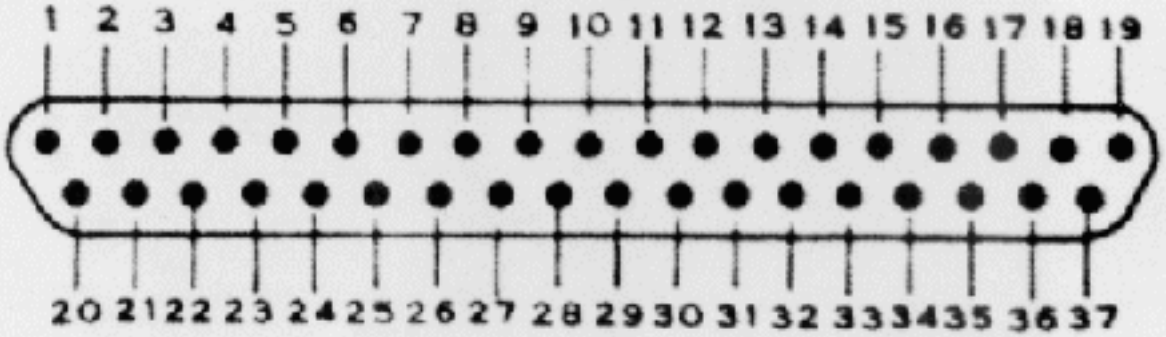
1 2 3 4 5 6 7 8 9 10 11 12 13 14 15 16 17 18 19
20 21 22 23 24 25 26 27 28 29 30 31 32 33 34 35 36 37

37 Contacts

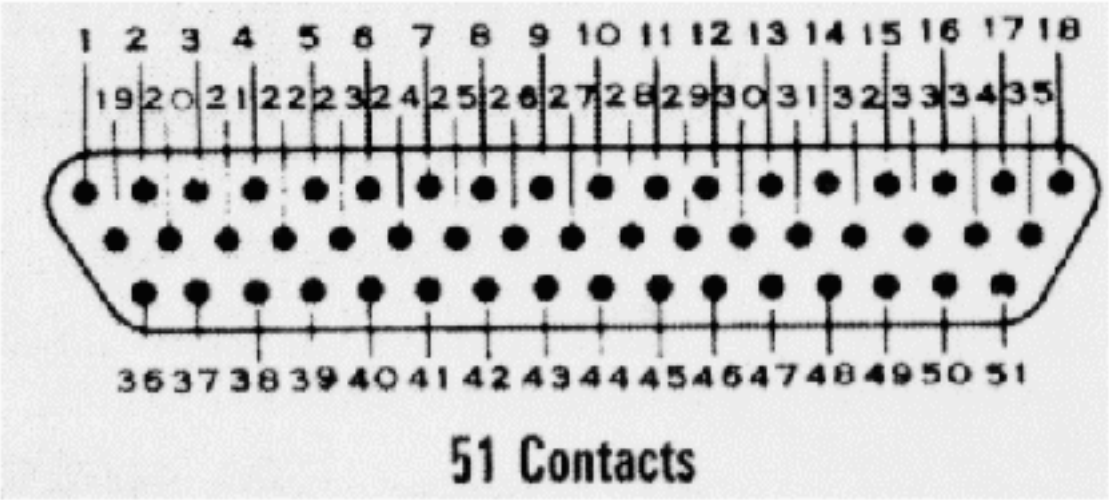
1 2 3 4 5 6 7 8 9 10 11 12 13 14 15 16 17 18
19 20 21 22 23 24 25 26 27 28 29 30 31 32 33 34 35
36 37 38 39 40 41 42 43 44 45 46 47 48 49 50 51
51 Contacts

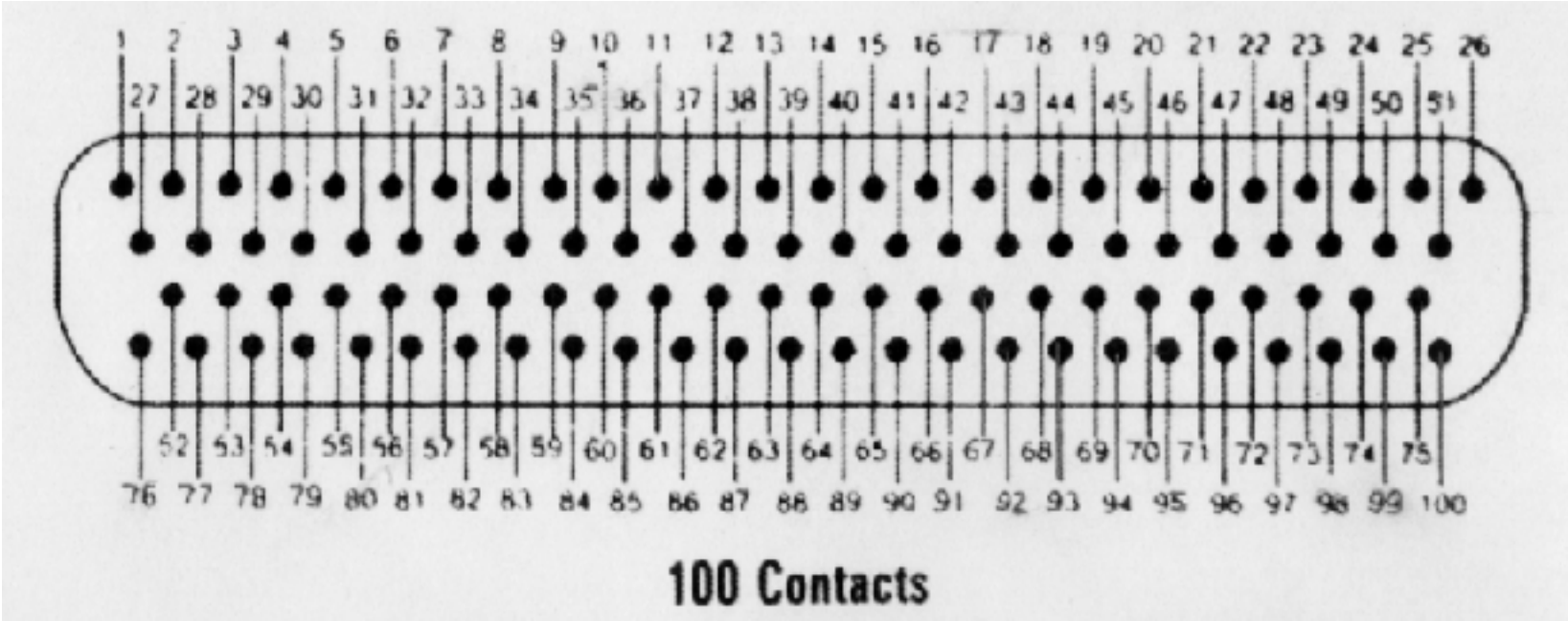

MIL-PRF-83513 Microminiature Connectors Manufacturer Listing

And Links to Manufacturer Homepages

Click

here

for detailed information regarding part technologies offered by manufacturers listed in the

PSAP

Core Suppliers List

Listed below are links to manufacturer data sites that may provide additional part related information. The linked sites are not under the control of NPSL and NASA is not responsible for information contained in the linked site. We are providing these links for your convenience only.

AIRBORN, INC.

4321 AIRBORN DRIVE

ADDISON, TX 75001

CAGE Code: 10400

Tel.: 972-931-3200

CINCH CONNECTOR

1521 MORSE AVENUE

ELK GROVE VILLAGE, IL 60007

CAGE Code: 71785
Tel.: 708-981-6000
CRISTEK INTERCONNECTS INC.
1301 SOUTH LEWIS ST.
ANAHEIM, CA 92805
CAGE Code: 67720
Tel.: 714-970-9388
ITT CANNON
666 EAST DYER RD
SANTA ANA, CA 92705
CAGE Code: 71468
Tel.: 714-557-4700
ULTI MATE, INC.
641 N. POPLAR STREET
ORANGE, CA 92668
CAGE Code: 58967
Tel.: 714-973-9388

Diodes

Transistors

Thermistors

Wire and Cable

Printed Circuit Connectors

The following printed circuit connector types are available for selection:

Type Designation	Description	Specification
M55302/XX	Printed Circuit Connector	MIL-C-55302

Parts

|

Packaging

|

Radiation

|

Publications

|

Calendar

|

Experts

Admin Login

|

Request Account

|

Feedback

|

Site Map

|

Help

|

Search

NEPP Program Manager:

Chuck Barnes, Jet Propulsion Laboratory

Responsible NASA Official:

Michael Sampson, NEPAG Manager

Website Comments:

Web Development Team

Last Modified:

MIL-C-55302 Printed Circuit Connectors

-65deg.C to +125deg.C

Part Number/Ordering Explanation

Important! Application Notes

Available Sources

Recent NASA Parts Selection List Updates for MIL-C-55302 Connectors

Last Updated: 03/10/98

MIL-C-55302 Printed Circuit Connectors

-65deg.C to +125deg.C

APPLICATION NOTES

1) Connectors are preferred for use in Level 2 applications. The following is recommended for additional testing for Level 1 applications:

100% Dielectric Withstanding Voltage and Insulation Resistance Followed By

10 Cycles of Thermal Shock

Low Level Signal Contact Resistance on One Sample

2) MIL-C-55302/190 through /193 connectors have 0.075 inch spacing between contacts. All other connectors have 0.100 inch spacing between contacts.

3) Hand soldering of these connectors is recommended. The use of wave soldering or infrared reflow equipment may overheat connectors, resulting in warpage or shifting of contact positions, and may cause high mating force or insufficient contact engagements.

4) For "D" shaped guidepin hardware only, style "Y", a polarization code may be added to the part number. This part number may appear on parts lists for assembly or other documents required for procurement, but is not marked on the part. Polarization code may be 1 through 64 in accordance with the

polarization figure

shown in the part number/ordering explanation page. Unless otherwise specified, all connectors are supplied in the -1 polarization position, and may be repolarized by using the M55302/57-01 spanner wrench procured separately per MIL-C-55302/57. Hardware shall be secured with low-outgassing adhesive.

5) MIL-C-55302/65 and /66 connectors contain crimp removable socket contacts which are supplied with the connectors. Replacement contact part numbers per MIL-C-55302/65 are M55302/65-01 for normal insertion force and M55302/65-02 for low insertion force.

6) Other contact termination styles are available. However, the letter designations for these options are not consistent between the detail specifications, and these termination styles are not offered in each detail specification. Consult detail specification and latest MIL-C-55302 QPL for availability.

7) For MIL-C-55302/57, /59 and /138 hardware options S and H, jackscrew length is 0.135 inches rather than 0.200 inches.

8) Connector materials have good outgassing characteristics.

Recent NASA Parts Selection List Updates for MIL-C-55302

03/10/98	Added detail to Application Note 1 covering additional screening recommendations for Level 1 applications
03/05/98	Initial Release of MIL-C-55302 Connector Section in the NPSL On-Line

MIL-C-55302 Printed Circuit Connectors

-65deg.C to +125deg.C

Part Number Ordering Information:

Example of P/N:

M55302/58LA14Y15

, where

M55302	/58	L	A	14	Y	15
Military Specification Number	Detail Specification	Socket Contact Type (Omit for Pin Contacts)	Terminal Type	Number of Contacts	Mounting Hardware Type	Optional Polarization Code (for Hardware Style

Click Here for Mating Information

0.100 Inch Spacing Between Contacts

Part Number	Type Description	Terminal Type	No. of Contacts	Mounting Hardware Options
M55302/55XXXXX	Plug, Socket Contacts, Straight	See Table 2	10, 14, 20, 34, 26, 30, 36, 40, 44, 50, 54, 56, 60, 66, 70	L, M, S, H
M55302/56XXXX	Receptacle, Pin Contacts	See Table 2	"	Jackset
M55302/57XXXX	Plug, Pin Contacts, Right Angle	See Table 1	"	X, Y, S, H
M55302/58XXXXX	Receptacle, Socket Contacts	See Table 2	"	X, Y, F, S, H
M55302/61XXXX	Plug, Pin contacts, Right Angle	See Table 1	"	Jackset
M55302/62XXXXX	Receptacle, Socket Contacts	See Table 2	"	L, M, S, H
M55302/63XXXX	Plug, Pin Contacts, Straight	See Table 2	"	L, M, S, F, H, X, Y
M55302/64XXXXX	Receptacle, Socket Contacts	See Table 2	"	F, X, Y
M55302/65XXXXX	Receptacle, Socket Contacts	Crimp Removable	"	X, Y, F, S, H
M55302/66XXXXX	Receptacle, Socket Contacts	Crimp Removable	"	L, M, S, F, H
M55302/59XXXX	Plug, Pin Contacts, Right Angle	See Table 1	90, 100, 120	X, Y, F, S, H
M55302/60XXXXX	Receptacle, Socket Contacts	See Table 2	90, 100, 120	X, Y, F, S, H
M55302/138XXXXX	Plug, Pin Contacts, Right Angle	See Table 1	160	X, Y, F, S, H
M55302/139XXXXX	Receptacle, Socket Contacts	See Slash Sheet	160	X, Y, F, S, H

0.075 Inch Spacing Between Contacts

Part Number	Type Description	Terminal Type	No. of Contacts	Mounting Hardware Options
M55302/190LXXXX	Receptacle, Socket Contacts	See Table 3	100	X, Y, F, S, N, L, M
M55302/191XXXXX	Plug, Pin Contacts, Right Angle	See Table 1	100	X, Y, F, S, N, L, M
M55302/192LXXXX	Receptacle, Socket Contacts	See Table 3	122, 152	X, Y, F, S, N, L, M
M55302/193XXXXX	Plug, Pin Contacts, Right Angle	See Table 1	122, 152	X, Y, F, S, N, L, M

Socket Contact Type Code	Description

-	Normal Insertion Force (Not Available for /190 or /192)
L	Low Insertion Force

Table 1: Contact Termination Options for M55302/57, /59, /61, /138, /191, /193

Terminal Type Code	Description
A	.109L Dip Terminal
B	.140L Dip Terminal
C	.172L Dip Terminal

Table 2: Contact Termination Options for M55302/55, /56, /58, /60, /62, /63, /64

Terminal Type Code	Description
A	Solder Cup
B	.140L Dip Terminal
C	.172L Dip Terminal
F	.100 Flex Circuit Terminal (Not Applicable to /60, /63)

Table 3: Contact Termination Options for M55302/190, /192

Terminal Type Code	Description
A	Solder Cup
B	.109L Dip Terminal
C	.140L Dip Terminal
D	.172L Dip Terminal
E	.093 Flex Circuit Terminal

Mounting Hardware Option Code	Description
L	Long Slotted Turning Jackscrew (.700)
M	Medium Slotted Turning Jackscrew (.500)
S	Short Slotted Turning Jackscrew (.200); See Application Note 7
F	Fixed Jackscrew
H	Short Hex Turning Jackscrew (.200); See Application Note 7
X	Full Round Guidepins
Y	D Shaped Guidepins

Mating Information

Plug Detail Specification	Mating Receptacle Detail Specification

/55	/56
/57, /61, /63	/58, /62, /64, /65, /66
/138	/139
/191	/190
/193	/192

Connector Polarization Code with D Shaped Guide Pins and Sockets for Hardware Style "Y"

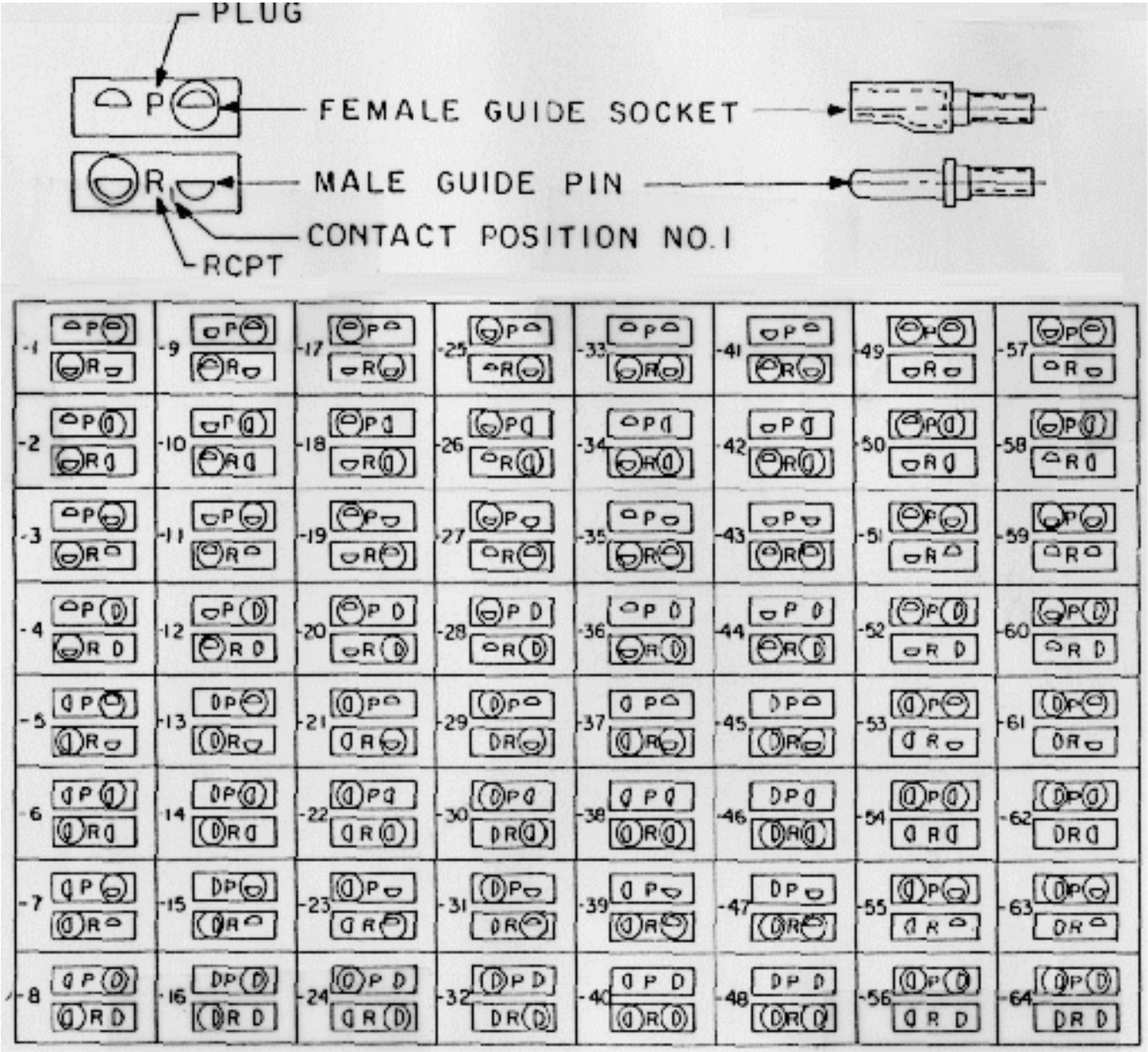
PLUG
FEMALE GUIDE SOCKET
MALE GUIDE PIN
CONTACT POSITION NO.1
RCPT

MIL-C-55302 Printed Circuit Connectors Manufacturer Listing

And Links to Manufacturer Homepages

Click

here

for detailed information regarding part technologies offered by manufacturers listed in the

PSAP

Core Suppliers List

Listed below are links to manufacturer data sites that may provide additional part related information. The linked sites are not under the control of NPSL and NASA is not responsible for information contained in the linked site. We are providing these links for your convenience only.

AIRBORN, INC.

4321 AIRBORN DRIVE

ADDISON, TX 75001

Cage Code: 10400

Tel.: 972-931-3200

INDUSTRIAL ELECTRONIC HARDWARE CORP. (IEH)

140 58TH STREET -8E

BAY RIDGE, NY 11220

Cage Code: 97913

Tel.: 718-492-4440

TEXAS INSTRUMENTS, INC.

34 FOREST STREET

ATTLEBORO, MA 02703

Cage Code: 59350

Tel.: 508-236-3800

TRI-STAR ELECTRONICS

2201 ROSECRANE AVENUE

EL SEGUNDO, CA 90245

Cage Code: 55104

Tel.: 310-536-0444

WINCHESTER ELECTRONICS

400 PARK ROAD

WATERTOWN, CT 06795

Cage Code: 81312

Tel.: 860-945-5000

About NPSL
Prohibited Materials
Parts Selection Table of Contents
Capacitors
Circuit Protection Devices
Fuses
Connectors
Filters
Inductors
Microcircuits
NEW!
Monolithics
Hybrids
Resistors
Semiconductors
(Summary)
Diodes
Transistors
Thermistors
Wire and Cable

Satellite Interface Connectors

The following power connector types are available for selection:

Type Designation	Description	Specification
700-42	Satellite Interface Connectors, Crimp Removable Contacts	GSFC S-311-P-718
700-42/1	Connectors, Electrical, Rectangular, Polarized Shell	GSFC S-311-P-718 /1
	Contacts, Power and Coaxial, Removable for Electrical Connectors (Sizes 1, 2 and 3)	GSFC S-311-P-718 /2
700-42/3	Connectors, Electrical, Rectangular, Polarized Shell, EMI Shielding (Size 1)	GSFC S-311-P-718 /3
	Backshell Kits, Connector, Rectangular, EMI Shielding, Strain Relief (Sizes 1, 2 and 3)	GSFC S-311-P-718 /4
700-42/5	Connectors, Electrical, Rectangular, Polarized Shell, EMI Shielding (Size 2)	GSFC S-311-P-718 /5
700-42/6	Connectors, Electrical, Rectangular, Polarized Shell, EMI Shielding (Size 3)	GSFC S-311-P-718/6

Packaging
|
Radiation
|
Publications
|
Calendar
|
Experts
Admin Login
|
Request Account
|
Feedback
|
Site Map
|
Help
|
Search
NEPP Program Manager:
Chuck Barnes, Jet Propulsion Laboratory
Responsible NASA Official:
Michael Sampson, NEPAG Manager
Website Comments:
Web Development Team
Last Modified:

August 8, 2001
AETD IT Security Banner
NASA Privacy Statement

Home
|
NASA Parts Selection List (NPSL)
|
Connectors
| Connector Contacts
About NPSL
Prohibited Materials
Parts Selection Table of Contents

Capacitors

Circuit Protection Devices

Fuses

Connectors

Filters

Inductors

Microcircuits

NEW!

Monolithics

Hybrids

Resistors

Semiconductors

(Summary)

Diodes

Transistors

Thermistors

Wire and Cable

Connector Contacts

The following connector contact types are available for selection:

Type Designation	Description	Specification
M39029/XX	Contacts, Electrical Connector	MIL-C-39029

Parts

|

Packaging

|

Radiation

|

Publications

|

Calendar

|

Experts

Admin Login

|

Request Account

|

Feedback

|

Site Map

|

Help

|

Search

NEPP Program Manager:

Chuck Barnes, Jet Propulsion Laboratory

Responsible NASA Official:

Michael Sampson, NEPAG Manager

Website Comments:

Web Development Team

Last Modified:

August 8, 2001

AETD IT Security Banner

NASA Privacy Statement

Home

|

NASA Parts Selection List (NPSL)

|

Connectors

| Connector Assemblies

About NPSL

Prohibited Materials

Parts Selection Table of Contents

Capacitors

Circuit Protection Devices

Fuses

Connectors

Filters

Inductors

Microcircuits

NEW!

Monolithics

Hybrids

Resistors

Semiconductors

(Summary)

Diodes

Transistors

Thermistors

Wire and Cable

Connector Accessories

The following connector accessory types are available for selection:

Type Designation	Description	Specification
M85049/XX	Backshell Connector Accessories	MIL-C-85049

Parts

|

Packaging

|

Radiation

|

Publications

|

Calendar

|

Experts

Admin Login

|

Request Account

|

Feedback

|

Site Map

|

Help

|

Search

NEPP Program Manager:

Chuck Barnes, Jet Propulsion Laboratory

Responsible NASA Official:

Michael Sampson, NEPAG Manager

Website Comments:

Web Development Team

Last Modified:

August 8, 2001

AETD IT Security Banner

FILTERS, EMI/RFI

The following Filter specifications are available for selection:

Military Specification	Generic Designator	Description
MIL-PRF-28861	FSXX	Filter, Radio Frequency/Electromagnetic Interference Suppression

|

Calendar

|

Experts

Admin Login

|

Request Account

|

Feedback

|

Site Map

|

Help

|

Search

NEPP Program Manager:

Chuck Barnes, Jet Propulsion Laboratory

Responsible NASA Official:

Michael Sampson, NEPAG Manager

Website Comments:

Web Development Team

Last Modified:

August 8, 2001

AETD IT Security Banner

NASA Privacy Statement

APPLICATION NOTES FOR MIL-PRF-28861

1) CAUTION! Special care must be exercised during installation of these parts. Parts covered by this specification may contain internal soldered connections that can reflow during installation.

2) WARNING! Strict adherence to the specification recommended torque is imperative. Excessive torque may crack the filter case and/or its internal components. Cracked discoidal capacitors may go undetected through post installation checkout, but lead to filter malfunction later on.

3) Presently, there are no Level 1 filters available because no sources have qualified to the "Class S" Product Assurance Level. For critical applications that require Level 1 reliability, procurement of filters to a source control drawing based on "Class S" requirements of MIL-PRF-28861 is recommended. In particular, such an SCD should include the Group B test flow for "Class S" filters of MIL-PRF-28861 on every lot.

4) MIL-PRF-28861/6 filters are NOT included in this listing because of reliability concerns. These filters are not hermetically sealed at one end and have inherent difficulties in assembly which may lead to latent and/or catastrophic failures. To accommodate the threads for the screw body of this small part, the case walls are extremely thin and are therefore susceptible to twisting and rupture during installation even when torqued using finger tightening.

Part Number Ordering Information, example and explanation:

M28861/01-001TB where,

M28861	/01	-001	T	B
Military Specification Number (Conforming to MIL-PRF-28861)	Slash Sheet	Dash Number	Case Finish	Product Assurance Level

Click Here for Outline Dimensions

Part number ordering options are developed using the following criteria:

Detail Specification	Style
MIL-PRF-28861/1	FS10, FS11
MIL-PRF-28861/2	FS20
MIL-PRF-28861/4	FS40
MIL-PRF-28861/5	FS50

Case Finish Designator	Case Finish		Product Assurance Level Designator	Product Assurance Level
T	Tin Plated/Tin-Lead Plated		B	Class B
G	Gold-Plated		S	Class S (Not Currently Available)

Dash Number is a three digit number which uniquely specifies the filter configuration and parameters. See the parts listing sections for details.

Product Assurance Level denotes the quality assurance provisions required of the manufacturer per MIL-PRF-28861. "Class S" filters have more stringent quality and screening requirements than "Class B" filters. Some of the additional requirements for "Class S" are:

MIL-C-123 (Space Level Ceramic Capacitor Specification) Group A and B requirements for the discoidal capacitors used in the filter

Group A and B testing required on every lot

Finished filter DPA required

Refer to MIL-PRF-28861 for details of these requirements. Currently, there are no suppliers qualified for "Class S". See the Application Notes for suggestions for critical applications such as Level 1.

Recent NASA Parts Selection List Updates for MIL-PRF-28861

11/28/01	Updated source of supply information to remove RFI due to ongoing shipment hold concerns.
06/25/01	Updated available source of supply information including removal of Maxwell Sierra Filters from list of Sources. Maxwell voluntarily removed themselves from Qualified supplier status as they no longe
12/29/97	Initial Release of MIL-PRF-28861 Filter Section in the NPSL

Go to -

NEPP

|

NPSL

|

Filters

MIL-PRF-28861, FILTERS

Filters, Radio Interference/Electromagnetic Interference Suppression

FS Styles

Part Number/Ordering Explanation

Important! Application Notes

Recent NASA Parts Selection List Updates for MIL-PRF-28861

Last Updated November 28, 2001

Click on the link below to see the associated parts selection listing:

Style	Detail Specification (Click Here for Dimensions)
FS10, FS11	MIL-PRF-28861/1
FS20	MIL-PRF-28861/2
FS40	MIL-PRF-28861/4
FS50	MIL-PRF-28861/5

Circuit Configurations

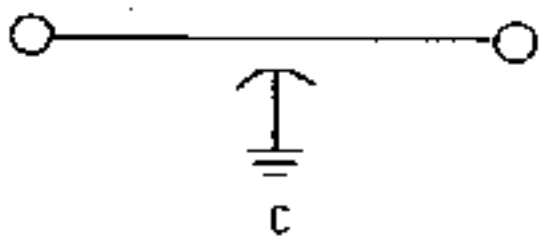

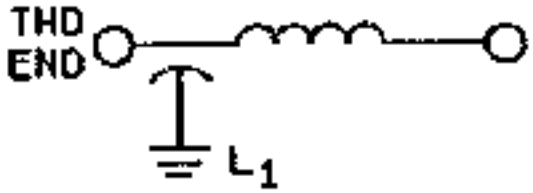

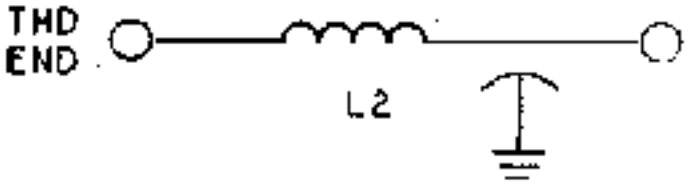

M28861/01

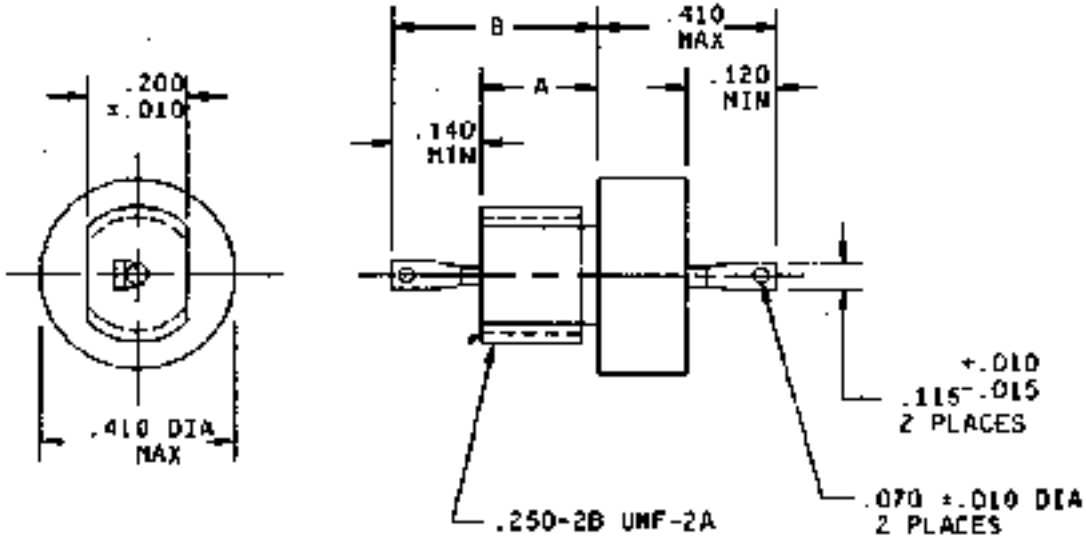

STYLES FS10 AND FS11

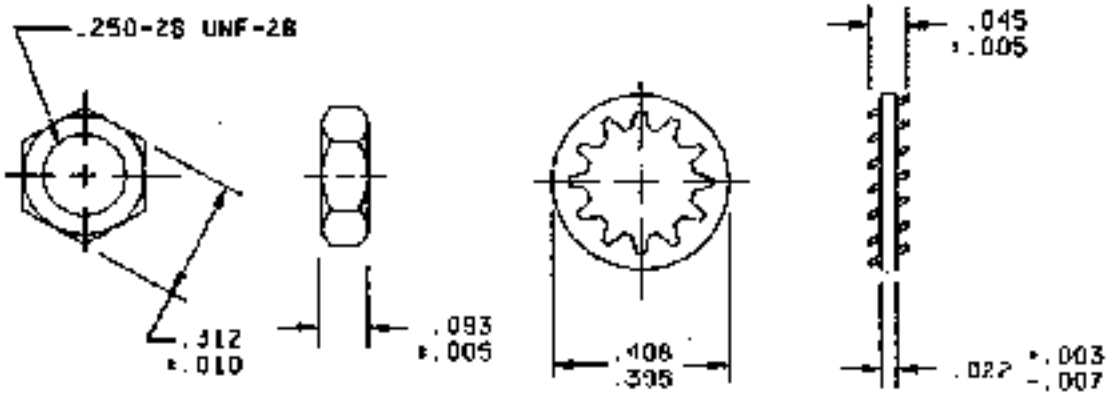

HEX NUT

LOCKWASHER

Dash Number	A Dimension (+/-0.010")	B Dimension Max.
001 through 010	0.187	0.357
011 through 020	0.312	0.482
021 through 026	0.187	0.357
031 through 036	0.312	0.482

M28861/02

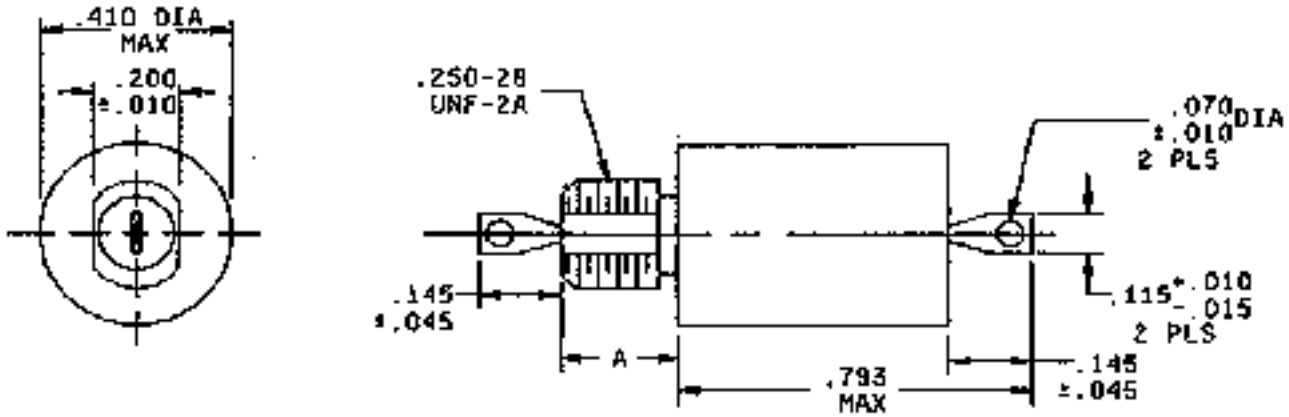

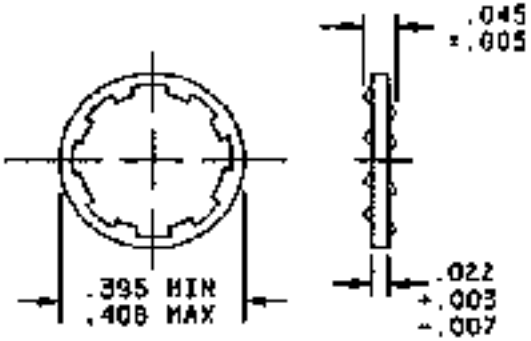

LOCKWASHER

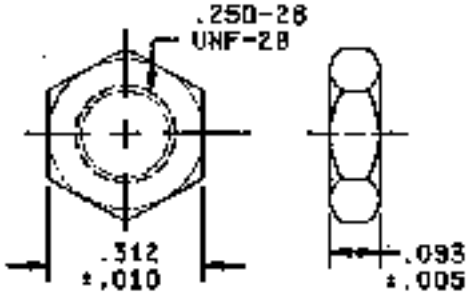

HEX NUT

Dash Number	A Dimension (+/-0.010")
001 through 012	0.187
013 through 024	0.312

M28861/04

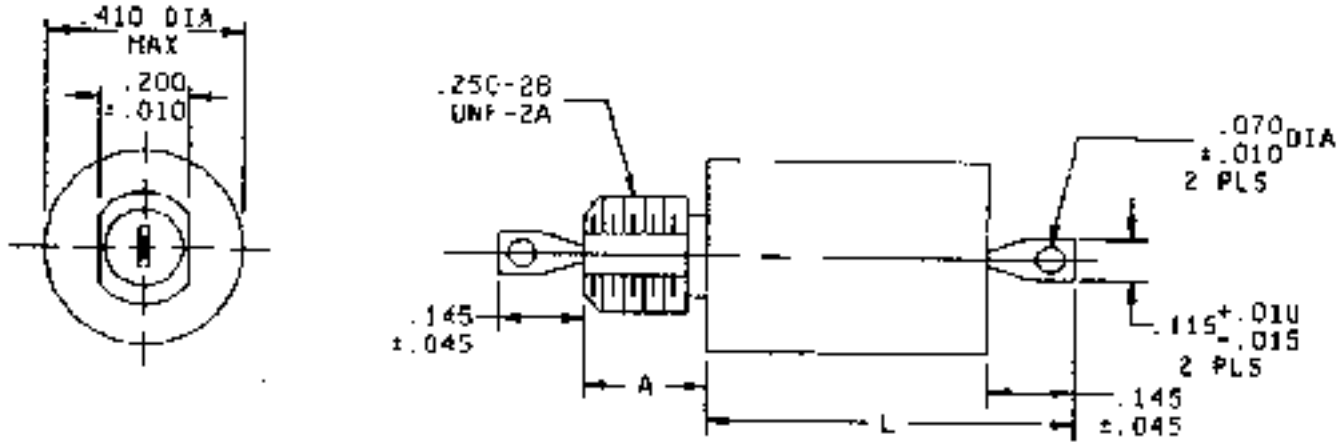

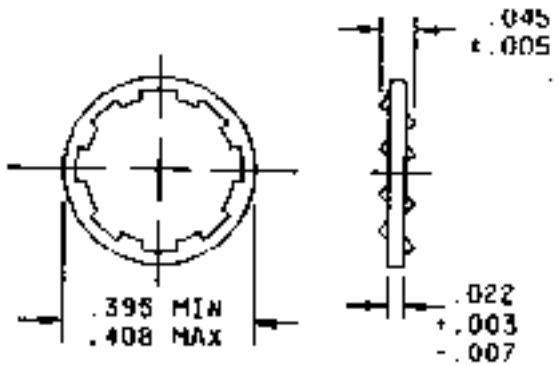

LOCKWASHER

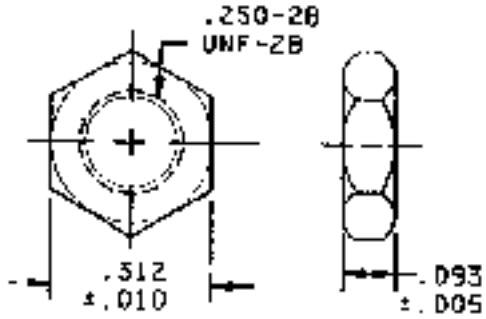

HEX NUT

Dash Number	A Dimension (+/-0.010")	L Dimension Max.	Dash Number	A Dimension (+/-0.010")	L Dimension Max.
001	0.187	0.630	019	0.312	0.630

002	0.187	0.630	020	0.312	0.630
003	0.187	0.730	021	0.312	0.730
004	0.187	0.630	022	0.312	0.630
005	0.187	0.630	023	0.312	0.630
006	0.187	0.730	024	0.312	0.730
007	0.187	0.630	025	0.312	0.630
008	0.187	0.630	026	0.312	0.630
009	0.187	0.730	027	0.312	0.730
010	0.187	0.630	028	0.312	0.630
011	0.187	0.630	029	0.312	0.630
012	0.187	0.730	030	0.312	0.730
013	0.187	0.630	031	0.312	0.630
014	0.187	0.630	032	0.312	0.630
015	0.187	0.730	033	0.312	0.730
016	0.187	0.630	034	0.312	0.630
017	0.187	0.630	035	0.312	0.630
018	0.187	0.730	036	0.312	0.730

M28861/05

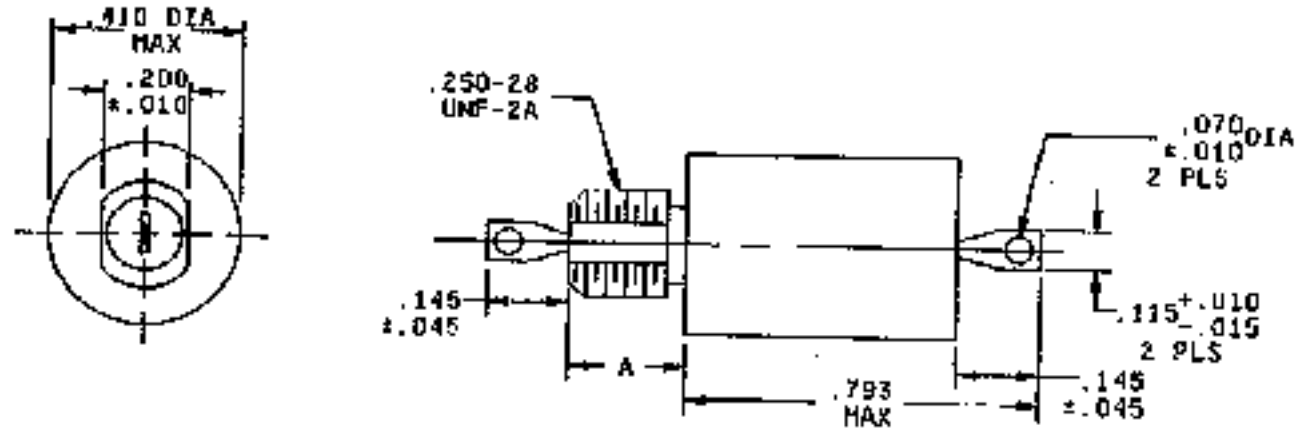

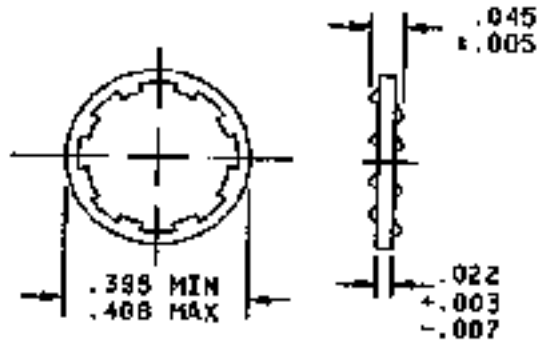

LOCKWASHER

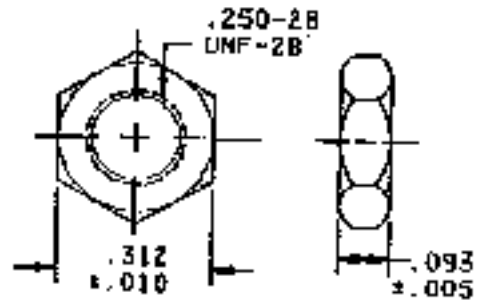

HEX NUT

Dash Number	A Dimension (+/-0.010")
001 through 012	0.187
013 through 024	0.312

M28861/01 Filters

Click Here for Outline Dimensions

Part Number	Style	Circuit Config.	DC Rated Voltage (V)	AC Rated Voltage (V)	Min. Cap. (uF)	Case Finish (&)	Level 2 (#)	Manufacturer
M28861/01-001&#	FS10	L2	50	---	1.2	T, G	B	AVX,SCI
M28861/01-002&#	FS10	C	50	---	1.2	T, G	B	AVX,SCI
M28861/01-003&#	FS11	L2	70	---	0.7	T, G	B	AVX,SCI
M28861/01-004&#	FS11	C	70	---	0.7	T, G	B	AVX,SCI
M28861/01-005&#	FS11	L2	100	---	0.45	T, G	B	AVX,PAE,SCI
M28861/01-006&#	FS11	C	100	---	0.45	T, G	B	AVX,PAE,SCI
M28861/01-007&#	FS11	L2	150	---	0.25	T	B	SCI
M28861/01-008&#	FS11	C	150	---	0.25	T	B	SCI
M28861/01-009&#	FS11	L2	200	125	0.15	T, G	B	AVX,PAE,SCI
M28861/01-010&#	FS11	C	200	125	0.15	T, G	B	AVX,PAE,SCI
M28861/01-011&#	FS11	L2	50	---	1.2	T, G	B	AVX,SCI
M28861/01-012&#	FS11	C	50	---	1.2	T, G	B	AVX,SCI
M28861/01-013&#	FS11	L2	70	---	0.7	T, G	B	AVX,SCI
M28861/01-014&#	FS11	C	70	---	0.7	T, G	B	AVX,SCI
M28861/01-015&#	FS11	L2	100	---	0.45	T, G	B	AVX,PAE,SCI
M28861/01-016&#	FS11	C	100	---	0.45	T, G	B	AVX,PAE,SCI
M28861/01-017&#	FS11	L2	150	---	0.25	T	B	SCI
M28861/01-018&#	FS11	C	150	---	0.25	T	B	SCI
M28861/01-019&#	FS11	L2	200	125	0.15	T, G	B	AVX,PAE,SCI
M28861/01-020&#	FS11	C	200	125	0.15	T, G	B	AVX,PAE,SCI
M28861/01-021&#	FS11	L2	200	125	0.01	T, G	B	AVX,SCI
M28861/01-022&#	FS11	C	200	125	0.01	T, G	B	AVX,SCI
M28861/01-023&#	FS11	L2	200	125	0.0027	T, G	B	AVX,SCI
M28861/01-024&#	FS11	C	200	125	0.0027	T, G	B	AVX,SCI
M28861/01-025&#	FS11	L2	200	125	0.001	T, G	B	AVX,SCI
M28861/01-026&#	FS11	C	200	125	0.001	T, G	B	AVX,SCI
M28861/01-031&#	FS11	L2	200	125	0.01	T, G	B	AVX,SCI
M28861/01-032&#	FS11	C	200	125	0.01	T, G	B	AVX,SCI
M28861/01-033&#	FS11	L2	200	125	0.0027	T, G	B	AVX,SCI
M28861/01-034&#	FS11	C	200	125	0.0027	T, G	B	AVX,SCI
M28861/01-035&#	FS11	L2	200	125	0.001	T, G	B	AVX,SCI
M28861/01-036&#	FS11	C	200	125	0.001	T, G	B	AVX,SCI

M28861/02 Filters

Click Here for Outline Dimensions

Part Number	Style	Circuit Config.	DC Rated Voltage (V)	Max. Current (Amps)	Min. Cap. (uF)	Case Finish (&)	Level 2 (#)	Manufacturer
M28861/02-001&#	FS20	L1	100	0.25	0.45	T	B	PAE,SCI
M28861/02-002&#	FS20	L2	100	0.25	0.45	T	B	PAE,SCI

M28861/02-003&#	FS20	PI	100	0.25	0.90	T	B	PAE,SCI
M28861/02-004&#	FS20	L1	100	1.0	0.45	T	B	PAE,SCI
M28861/02-005&#	FS20	L2	100	1.0	0.45	T	B	PAE,SCI
M28861/02-006&#	FS20	PI	100	1.0	0.90	T	B	PAE,SCI
M28861/02-007&#	FS20	L1	100	3.0	0.45	T	B	PAE,SCI
M28861/02-008&#	FS20	L2	100	3.0	0.45	T	B	PAE,SCI
M28861/02-009&#	FS20	PI	100	3.0	0.90	T	B	PAE,SCI
M28861/02-010&#	FS20	L1	100	5.0	0.45	T	B	PAE,SCI
M28861/02-011&#	FS20	L2	100	5.0	0.45	T	B	PAE,SCI
M28861/02-012&#	FS20	PI	100	5.0	0.90	T	B	PAE,SCI
M28861/02-013&#	FS20	L1	100	0.25	0.45	T	B	PAE,SCI
M28861/02-014&#	FS20	L2	100	0.25	0.45	T	B	PAE,SCI
M28861/02-015&#	FS20	PI	100	0.25	0.90	T	B	PAE,SCI
M28861/02-016&#	FS20	L1	100	1.0	0.45	T	B	PAE,SCI
M28861/02-017&#	FS20	L2	100	1.0	0.45	T	B	PAE,SCI
M28861/02-018&#	FS20	P1	100	1.0	0.90	T	B	PAE,SCI
M28861/02-019&#	FS20	L1	100	3.0	0.45	T	B	PAE,SCI
M28861/02-020&#	FS20	L2	100	3.0	0.45	T	B	PAE,SCI
M28861/02-021&#	FS20	PI	100	3.0	0.90	T	B	PAE,SCI
M28861/02-022&#	FS20	L1	100	5.0	0.45	T	B	PAE,SCI
M28861/02-023&#	FS20	L2	100	5.0	0.45	T	B	PAE,SCI
M28861/02-024&#	FS20	PI	100	5.0	0.90	T	B	PAE,SCI

M28861/04 Filters

Click Here for Outline Dimensions

Part Number	Style	Circuit Config.	DC Rated Voltage (V)	Max. Current (Amps)	Min. Cap. (uF)	Case Finish (&)	Level 2 (#)	Manufacturer
M28861/04-001&#	FS40	L1	70	0.10	0.70	T, G	B	AVX
M28861/04-002&#	FS40	L2	70	0.10	0.70	T, G	B	AVX
M28861/04-003&#	FS40	PI	70	0.10	1.4	T, G	B	AVX
M28861/04-004&#	FS40	L1	70	0.30	0.70	T, G	B	AVX
M28861/04-005&#	FS40	L2	70	0.30	0.70	T, G	B	AVX
M28861/04-006&#	FS40	PI	70	0.30	1.4	T, G	B	AVX
M28861/04-007&#	FS40	L1	70	0.50	0.70	T, G	B	AVX
M28861/04-008&#	FS40	L2	70	0.50	0.70	T, G	B	AVX
M28861/04-009&#	FS40	PI	70	0.50	1.4	T, G	B	AVX
M28861/04-010&#	FS40	L1	70	1.0	0.70	T, G	B	AVX
M28861/04-011&#	FS40	L2	70	1.0	0.70	T, G	B	AVX
M28861/04-012&#	FS40	PI	70	1.0	1.4	T, G	B	AVX
M28861/04-013&#	FS40	L1	70	3.0	0.70	T, G	B	AVX
M28861/04-014&#	FS40	L2	70	3.0	0.70	T, G	B	AVX
M28861/04-015&#	FS40	PI	70	3.0	1.4	T, G	B	AVX
M28861/04-016&#	FS40	L1	70	5.0	0.70	T, G	B	AVX
M28861/04-017&#	FS40	L2	70	5.0	0.70	T, G	B	AVX
M28861/04-018&#	FS40	P1	70	5.0	1.4	T, G	B	AVX

M28861/04-019&#	FS40	L1	70	0.10	0.70	T, G	B	AVX
M28861/04-020&#	FS40	L2	70	0.10	0.70	T, G	B	AVX
M28861/04-021&#	FS40	PI	70	0.10	1.4	T, G	B	AVX
M28861/04-022&#	FS40	L1	70	0.30	0.70	T, G	B	AVX
M28861/04-023&#	FS40	L2	70	0.30	0.70	T, G	B	AVX
M28861/04-024&#	FS40	PI	70	0.30	1.4	T, G	B	AVX
M28861/04-025&#	FS40	L1	70	0.50	0.70	T, G	B	AVX
M28861/04-026&#	FS40	L2	70	0.50	0.70	T, G	B	AVX
M28861/04-027&#	FS40	PI	70	0.50	1.4	T, G	B	AVX
M28861/04-028&#	FS40	L1	70	1.0	0.70	T, G	B	AVX
M28861/04-029&#	FS40	L2	70	1.0	0.70	T, G	B	AVX
M28861/04-030&#	FS40	PI	70	1.0	1.4	T, G	B	AVX
M28861/04-031&#	FS40	L1	70	3.0	0.70	T, G	B	AVX
M28861/04-032&#	FS40	L2	70	3.0	0.70	T, G	B	AVX
M28861/04-033&#	FS40	PI	70	3.0	1.4	T, G	B	AVX
M28861/04-034&#	FS40	L1	70	5.0	0.70	T, G	B	AVX
M28861/04-035&#	FS40	L2	70	5.0	0.70	T, G	B	AVX
M28861/04-036&#	FS40	PI	70	5.0	1.4	T, G	B	AVX

M28861/05 Filters

Click Here for Outline Dimensions

Part Number	Style	Circuit Config.	DC Rated Voltage (V)	Max. Current (Amps)	Cap. +100%, -0% (uF)	Case Finish (&)	Level 2 (#)	Manufacturer
M28861/05-001&#	FS50	L1	200	0.25	0.15	T, G	B	AVX,SCI
M28861/05-002&#	FS50	L2	200	0.25	0.15	T, G	B	AVX,SCI
M28861/05-003&#	FS50	PI	200	0.25	0.30	T, G	B	AVX,SCI
M28861/05-004&#	FS50	L1	200	1.0	0.15	T, G	B	AVX,SCI
M28861/05-005&#	FS50	L2	200	1.0	0.15	T, G	B	AVX,SCI
M28861/05-006&#	FS50	PI	200	1.0	0.30	T, G	B	AVX,SCI
M28861/05-007&#	FS50	L1	200	3.0	0.15	T, G	B	AVX,SCI
M28861/05-008&#	FS50	L2	200	3.0	0.15	T, G	B	AVX,SCI
M28861/05-009&#	FS50	PI	200	3.0	0.30	T, G	B	AVX,SCI
M28861/05-010&#	FS50	L1	200	5.0	0.15	T, G	B	AVX,SCI
M28861/05-011&#	FS50	L2	200	5.0	0.15	T, G	B	AVX,SCI
M28861/05-012&#	FS50	PI	200	5.0	0.30	T, G	B	AVX,SCI
M28861/05-013&#	FS50	L1	200	0.25	0.15	T, G	B	AVX,SCI
M28861/05-014&#	FS50	L2	200	0.25	0.15	T, G	B	AVX,SCI
M28861/05-015&#	FS50	PI	200	0.25	0.30	T, G	B	AVX,SCI
M28861/05-016&#	FS50	L1	200	1.0	0.15	T, G	B	AVX,SCI
M28861/05-017&#	FS50	L2	200	1.0	0.15	T, G	B	AVX,SCI
M28861/05-018&#	FS50	P1	200	1.0	0.30	T, G	B	AVX,SCI
M28861/05-019&#	FS50	L1	200	3.0	0.15	T, G	B	AVX,SCI
M28861/05-020&#	FS50	L2	200	3.0	0.15	T, G	B	AVX,SCI
M28861/05-021&#	FS50	PI	200	3.0	0.30	T, G	B	AVX,SCI
M28861/05-022&#	FS50	L1	200	5.0	0.15	T, G	B	AVX,SCI

M28861/05-023&#	FS50	L2	200	5.0	0.15	T, G	B	AVX,SCI
M28861/05-024&#	FS50	PI	200	5.0	0.30	T, G	B	AVX,SCI

Filter Manufacturer Listing

Listed below are links to manufacturer data sites that may provide additional part related information. The linked sites are not under the control of NPSL and NASA is not responsible for information contained in the linked site. We are providing these links for your convenience only.

AVX

AVX Filters Corporation

11144 Penrose Street

Sun Valley, CA 91352

CAGE Code: 59942

Tel: 213-767-6770

PAE

(formerly known as Ceramic Devices, Inc.)

Pacific Aerospace and Electronics, Inc.

434 Olds Station Road

Wenatchee, WA 98801

CAGE Code: 66230

SCI

Spectrum Control, Inc.

8061 Avonia Road

Fairview, PA 16415

CAGE Code: 33095

Tel: 814-474-1571

NASA Parts Selection List

Coils and Inductors

The following Coil and Inductor specifications are available for selection:

Military Specification	Description
MIL-PRF-39010	Coil, Fixed, Radio Frequency, Molded, Established Reliability
MIL-PRF-83446	Coil, Fixed or Variable, Radio Frequency

|
Publications
|
Calendar
|
Experts
Admin Login
|
Request Account
|
Feedback
|
Site Map
|
Help
|
Search
NEPP Program Manager:
Chuck Barnes, Jet Propulsion Laboratory
Responsible NASA Official:
Michael Sampson, NEPAG Manager
Website Comments:
Web Development Team
Last Modified:
August 8, 2001
AETD IT Security Banner
NASA Privacy Statement
Go to -
NEPP
|
NPSL
|
Coils
MIL-PRF-39010, COILS
Coils, Fixed, Radio Frequency, Established Reliability
39010 Styles
Part Number/Ordering Explanation
Important! Application Notes
Revision History for MIL-PRF-39010 Listing in the NPSL
Last Updated 08/13/01

Click on the link below to see the associated parts selection listing:

Detail Specification	Description (Click Here for Dimensions)
MIL-PRF-39010/1	Coils, Microminiature, Magnetically Shielded (Phenolic Core, Iron Sleeve) 0.10 uH to 0.82 uH
MIL-PRF-39010/2	Coils, Microminiature, Magnetically Shielded (Iron Core, Iron Sleeve) 1.0 uH to 12.0 uH
MIL-PRF-39010/3	Coils, Microminiature, Magnetically Shielded (Ferrite Core, Ferrite Sleeve) 15 uH to 100,000 uH
MIL-PRF-39010/6	Coils, Microminiature, Magnetically Shielded (Phenolic Core) 0.15 uH to 4.7 uH
MIL-PRF-39010/7	Coils, Microminiature, Magnetically Shielded (Powdered Iron Core) 5.6 uH to 33 uH

APPLICATION NOTES FOR MIL-PRF-39010

1) These parts are suitable for Level 2 applications. However, they may be used in Level 1 applications if they meet the Class S requirements of MIL-STD-981.

2) Parts covered by this specification may contain internal soldered connections that may reflow during installation. Special care must be exercised whe soldering to prevent internal solder reflow.

Revision History for MIL-PRF-39010 Listing in the NPSL

12/29/97	Initial Release of MIL-PRF-39010 Coils Section in the NPSL

Part Number Ordering Information, example and explanation:

M39010/01-AR10JP where,

M39010	/01	-A	R10	J	P
Military Specification Number (Conforming to MIL-PRF-39010)	Slash Sheet	Class Maximum Operating Temperature	Inductance Value	Inductance Tolerance	Failure Rate Level

Click Here for Outline Dimensions

Part number ordering options are developed using the following criteria:

Detail Specification	Description
MIL-PRF-39010/01	Coils, Microminiature, Magnetically Shielded (Phenolic Core, Iron Sleeve)
MIL-PRF-39010/02	Coils, Microminiature, Magnetically Shielded (Iron Core, Iron Sleeve)
MIL-PRF-39010/03	Coils, Microminiature, Magnetically Shielded (Ferrite Core, Ferrite Sleeve)
MIL-PRF-39010/06	Coils, Microminiature, Magnetically Shielded (Phenolic Core)
MIL-PRF-39010/07	Coils, Microminiature, Magnetically Shielded (Powdered Iron Core)

Class Character	Operating Temperature (Maximum)		Tolerance Character	Inductance Tolerance (+/-%)
A	+105deg.C		J	5
B	+125deg.C		K	10
F	+150deg.C		L	20

Failure Rate Designator	Failure Rate Level (%/1000 hrs)
S	0.001
R	0.010
P	0.100

Inductance in microhenries (uH) is expressed by three characters. For less than 10 uH, two digits represent significant figures and the letter "R" represents the decimal point location. For values of 10 uH and over, the first two digits represent significant figures and the third digit represents the number of zeroes to follow.

Examples: R12 = 0.12 uH

3R9 = 3.9 uH

100 = 10 uH

272 = 2700 uH

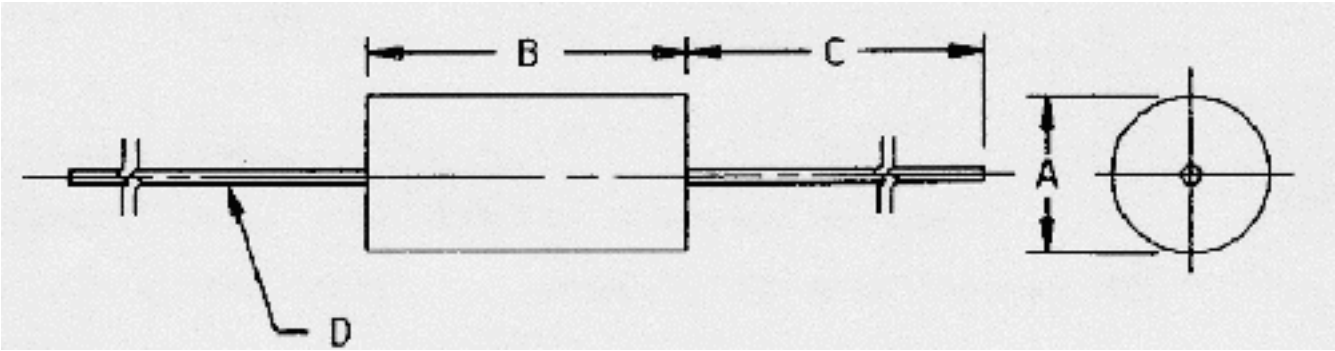

	A		B		C		D	
Style	Min. (in.)	Max. (in.)	Min. (in.)	Max. (in.)	Min. (in.)	Max. (in.)	Min. (in.)	Max. (in.)
M39010/01	0.152	0.172	0.390	0.430	1.250	1.626	0.023	0.027
M39010/02	0.152	0.172	0.390	0.430	1.250	1.626	0.023	0.027
M39010/03	0.152	0.172	0.390	0.430	1.250	1.626	0.023	0.027
M39010/06	0.146	0.166	0.365	0.385	1.250	1.626	0.023	0.027
M39010/07	0.146	0.166	0.365	0.385	1.250	1.626	0.023	0.027

M39010/01 Coils

Click Here for Outline Dimensions

Part Number	Inductance (uH)	Q (Min.)	Inductance Tolerance (%)	Rated DC Current (mA)	Level 2 (#)	Manufacturer
M39010/01-AR10%#	0.10	50	J, K	1790	P or R	API, DAL
M39010/01-AR12%#	0.12	50	J, K	1530	P or R	API, DAL
M39010/01-AR15%#	0.15	50	J, K	1470	P or R	API, DAL
M39010/01-AR18%#	0.18	50	J, K	1300	P or R	API, DAL
M39010/01-AR22%#	0.22	49	J, K	1100	P or R	API, DAL
M39010/01-AR27%#	0.27	47	J, K	853	P or R	API, DAL
M39010/01-AR33%#	0.33	46	J, K	780	P or R	API, DAL
M39010/01-AR39%#	0.39	44	J, K	670	P or R	API, DAL
M39010/01-AR47%#	0.47	44	J, K	565	P or R	API, DAL
M39010/01-AR56%#	0.56	43	J, K	490	P or R	API, DAL
M39010/01-AR68%#	0.68	42	J, K	420	P or R	API, DAL
M39010/01-AR82%#	0.82	40	J, K	370	P or R	API, DAL

M39010/02 Coils

Click Here for Outline Dimensions

Part Number	Inductance (uH)	Q (Min.)	Inductance Tolerance (%)	Rated DC Current (mA)	Level 2 (#)	Manufacturer
M39010/02-A1R0%#	1.0	44	J, K	1070	P or R	API, DAL
M39010/02-A1R2%#	1.2	44	J, K	895	P or R	API, DAL
M39010/02-A1R5%#	1.5	44	J, K	815	P or R	API, DAL
M39010/02-A1R8%#	1.8	44	J, K	755	P or R	API, DAL
M39010/02-A2R2%#	2.2	44	J, K	650	P or R	API, DAL
M39010/02-A2R7%#	2.7	44	J, K	535	P or R	API, DAL
M39010/02-A3R3%#	3.3	44	J, K	480	P or R	API, DAL
M39010/02-A3R9%#	3.9	44	J, K	450	P or R	API, DAL
M39010/02-A4R7%#	4.7	44	J, K	380	P or R	API, DAL
M39010/02-A5R6%#	5.6	44	J, K	335	P or R	API, DAL
M39010/02-A6R8%#	6.8	50	J, K	280	P or R	API, DAL
M39010/02-A8R2%#	8.2	50	J, K	245	P or R	API, DAL
M39010/02-A100%#	10.0	50	J, K	220	P or R	API, DAL
M39010/02-A120%#	12.0	55	J, K	200	P or R	API, DAL

M39010/03 Coils

Click Here for Outline Dimensions

Part Number	Inductance (uH)	Q (Min.)	Inductance Tolerance (%)	Rated DC Current (mA)	Level 2 (#)	Manufacturer
M39010/03-A150%#	15	45	J, K, L	315	P or R	API
M39010/03-A180%#	18	45	J, K, L	300	P or R	API
M39010/03-A220%#	22	45	J, K, L	290	P or R	API

M39010/03-A270%#	27	45	J, K, L	260	P or R	API
M39010/03-A330%#	33	45	J, K, L	240	P or R	API
M39010/03-A390%#	39	50	J, K, L	205	P or R	API
M39010/03-A470%#	47	50	J, K, L	195	P or R	API
M39010/03-A560%#	56	50	J, K, L	190	P or R	API
M39010/03-A680%#	68	50	J, K, L	180	P or R	API
M39010/03-A820%#	82	50	J, K, L	170	P or R	API
M39010/03-A101%#	100	50	J, K, L	160	P or R	API
M39010/03-A121%#	120	55	J, K, L	150	P or R	API
M39010/03-A151%#	150	55	J, K, L	140	P or R	API
M39010/03-A181%#	180	55	J, K, L	135	P or R	API
M39010/03-A221%#	220	55	J, K, L	125	P or R	API
M39010/03-A271%#	270	55	J, K, L	115	P or R	API
M39010/03-A331%#	330	55	J, K, L	110	P or R	API
M39010/03-A391%#	390	60	J, K, L	105	P or R	API
M39010/03-A471%#	470	60	J, K, L	92	P or R	API
M39010/03-A561%#	560	60	J, K, L	90	P or R	API
M39010/03-A681%#	680	60	J, K, L	80	P or R	API
M39010/03-A821%#	820	60	J, K, L	80	P or R	API
M39010/03-A102%#	1,000	60	J, K, L	70	P or R	API
M39010/03-A122%#	1,200	45	J, K, L	60	P or R	API
M39010/03-A152%#	1,500	45	J, K, L	55	P or R	API
M39010/03-A182%#	1,800	45	J, K, L	50	P or R	API
M39010/03-A222%#	2,200	45	J, K, L	50	P or R	API
M39010/03-A272%#	2,700	45	J, K, L	40	P or R	API
M39010/03-A332%#	3,300	45	J, K, L	40	P or R	API
M39010/03-A392%#	3,900	45	J, K, L	35	P or R	API
M39010/03-A472%#	4,700	45	J, K, L	31	P or R	API
M39010/03-A562%#	5,600	44	J, K, L	28	P or R	API
M39010/03-A682%#	6,800	40	J, K, L	27	P or R	API
M39010/03-A822%#	8,200	40	J, K, L	26	P or R	API
M39010/03-A103%#	10,000	40	J, K, L	24	P or R	API
M39010/03-A123%#	12,000	30	J, K, L	23	P or R	API
M39010/03-A153%#	15,000	30	J, K, L	22	P or R	API
M39010/03-A183%#	18,000	30	J, K, L	21	P or R	API
M39010/03-A223%#	22,000	27	J, K, L	17	P or R	API
M39010/03-A273%#	27,000	27	J, K, L	16	P or R	API
M39010/03-A333%#	33,000	27	J, K, L	15	P or R	API
M39010/03-A393%#	39,000	27	J, K, L	15	P or R	API
M39010/03-A473%#	47,000	23	J, K, L	13	P or R	API
M39010/03-A563%#	56,000	23	J, K, L	13	P or R	API
M39010/03-A683%#	68,000	23	J, K, L	12	P or R	API
M39010/03-A823%#	82,000	21	J, K, L	11	P or R	API
M39010/03-A104%#	100,000	18	J, K, L	11	P or R	API

Click Here for Outline Dimensions

Part Number	Inductance (uH)	Q (Min.)	Inductance Tolerance (%)	Rated DC Current (mA)	Level 2 (#)	Manufacturer
M39010/06-BR15%#	0.15	50	J, K, L	2450	P or R	API, DAL
M39010/06-BR22%#	0.22	50	J, K, L	1810	P or R	API, DAL
M39010/06-BR33%#	0.33	45	J, K, L	1400	P or R	API, DAL
M39010/06-BR47%#	0.47	45	J, K, L	1225	P or R	API, DAL
M39010/06-BR56%#	0.56	50	J, K, L	1150	P or R	API, DAL
M39010/06-BR68%#	0.68	50	J, K, L	1100	P or R	API, DAL
M39010/06-BR82%#	0.82	50	J, K, L	900	P or R	API, DAL
M39010/06-B1R0%#	1.0	50	J, K, L	785	P or R	API, DAL
M39010/06-B1R2%#	1.2	33	J, K, L	650	P or R	API, DAL
M39010/06-B1R5%#	1.5	33	J, K, L	600	P or R	API, DAL
M39010/06-B1R8%#	1.8	33	J, K, L	525	P or R	API, DAL
M39010/06-B2R2%#	2.2	33	J, K, L	435	P or R	API, DAL
M39010/06-B2R7%#	2.7	33	J, K, L	385	P or R	API, DAL
M39010/06-B3R3%#	3.3	33	J, K, L	300	P or R	API, DAL
M39010/06-B3R9%#	3.9	33	J, K, L	280	P or R	API, DAL
M39010/06-B4R7%#	4.7	33	J, K, L	260	P or R	API, DAL

M39010/07 Coils

Click Here for Outline Dimensions

Part Number	Inductance (uH)	Q (Min.)	Inductance Tolerance (%)	Rated DC Current (mA)	Level 2 (#)	Manufacturer
M39010/07-A5R6%#	5.6	45	J, K	495	P or R	API, DAL
M39010/07-A6R8%#	6.8	50	J, K	395	P or R	API, DAL
M39010/07-A8R2%#	8.2	50	J, K	360	P or R	API, DAL
M39010/07-A100%#	10.0	55	J, K	290	P or R	API, DAL
M39010/07-A120%#	12.0	65	J, K	265	P or R	API, DAL
M39010/07-A150%#	15.0	65	J, K	240	P or R	API, DAL
M39010/07-A180%#	18.0	75	J, K	185	P or R	API, DAL
M39010/07-A220%#	22.0	75	J, K	175	P or R	API, DAL
M39010/07-A270%#	27.0	60	J, K	170	P or R	API, DAL
M39010/07-A330%#	33.0	65	J, K	165	P or R	API, DAL

Go to -
NEPP
|
NPSL
|
Capacitors
MIL-PRF-83446, COILS

Coils, Chip, Fixed or Variable, Radio Frequency

83446 Styles

Part Number/Ordering Explanation

Important! Application Notes

Revision History for MIL-PRF-83446 Listing in the NPSL

Last Updated 08/13/01

Click on the link below to see the associated parts selection listing:

Detail Specification	Description (Click Here for Dimensions)
MIL-PRF-83446/04	Coils, Chip, Fixed, Radio Frequency 0.01 uH to 27.0 uH
MIL-PRF-83446/05	Coils, Chip, Fixed, Radio Frequency 0.01 uH to 10.0 uH
MIL-PRF-83446/07	Coils, Chip, Variable, Radio Frequency [0.016 uH - 0.019 uH] through [59.8 uH - 76.1 uH]
MIL-PRF-83446/09	Coils, Chip, Variable, Radio Frequency [0.015 uH - 0.021 uH] through [90.0 uH - 150.0 uH]
MIL-PRF-83446/10	Coils, Chip, Fixed, Radio Frequency 0.01 uH to 1,000 uH

APPLICATION NOTES FOR MIL-PRF-83446

1) These parts are suitable for Level 2 applications. However, they may be used in Level 1 applications if they meet the Class S requirements of MIL-STD-981.

2) The epoxy coated coils of MIL-PRF-83446/4 are sensitive to operation at or near the maximum operating temperature of 125deg.C. It is suggested that these coils be restricted in application to a temperature of 105deg.C maximum.

Revision History for MIL-PRF-83446 Listing in the NPSL

08/13/01	Per manufacturer request, I updated Advanced Chip Magnetics manufacturer listing to include the word "COAST" in their name as well as update their address/phone/www page listing. Also, added manufactu
12/29/97	Initial Release of MIL-PRF-83446 Chip Coils Section in the NPSL

Part Number Ordering Information, example and explanation:

M83446/04-01F where,

M83446	/04	-01	F
Military Specification Number (Conforming to MIL-PRF-83446)	Slash Sheet	Dash Number	Termination Finish

Click Here for Outline Dimensions

Part number ordering options are developed using the following criteria:

Detail Specification	Description
MIL-PRF-83446/04	Coils, Chip, Fixed, Radio Frequency
MIL-PRF-83446/05	Coils, Chip, Fixed, Radio Frequency
MIL-PRF-83446/07	Coils, Chip, Variable, Radio Frequency
MIL-PRF-83446/09	Coils, Chip, Variable, Radio Frequency
MIL-PRF-83446/10	Coils, Chip, Fixed, Radio Frequency

Termination Finish Designator	Termination Finish
A	Gold Over Nickel
B	Tin-Lead Over Nickel
C	Tin Plated
D	Platinum-Gold
E	Palladium-Silver
F	Tin-Lead

The two digit dash number specifies the individual inductor characteristics. The individual parts listing sections provide details.

M83446/04

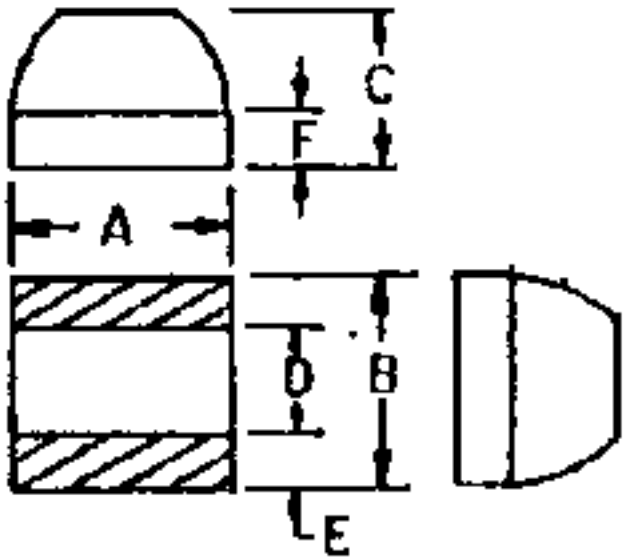

A	B	C	D	E	F
0.100+/-0.010	0.100+/-0.010	0.085 max.	0.030 min.	0.015 min.	0.020 max.

M83446/05

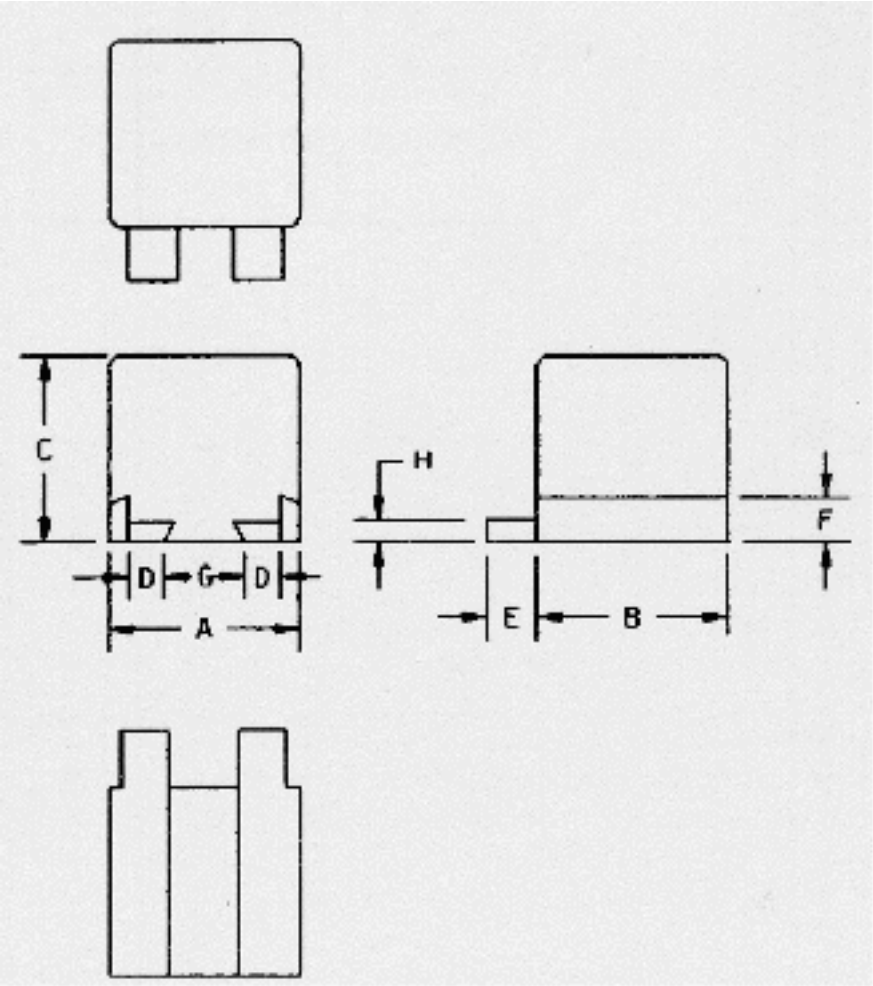

A	B	C	D	E	F	G	H
0.110 max.	0.105 max.	0.085 max.	0.030+/-0.005	0.040+/-0.010	0.018+/-0.005	0.038+/-0.010	0.005+/-0.002

M83446/07

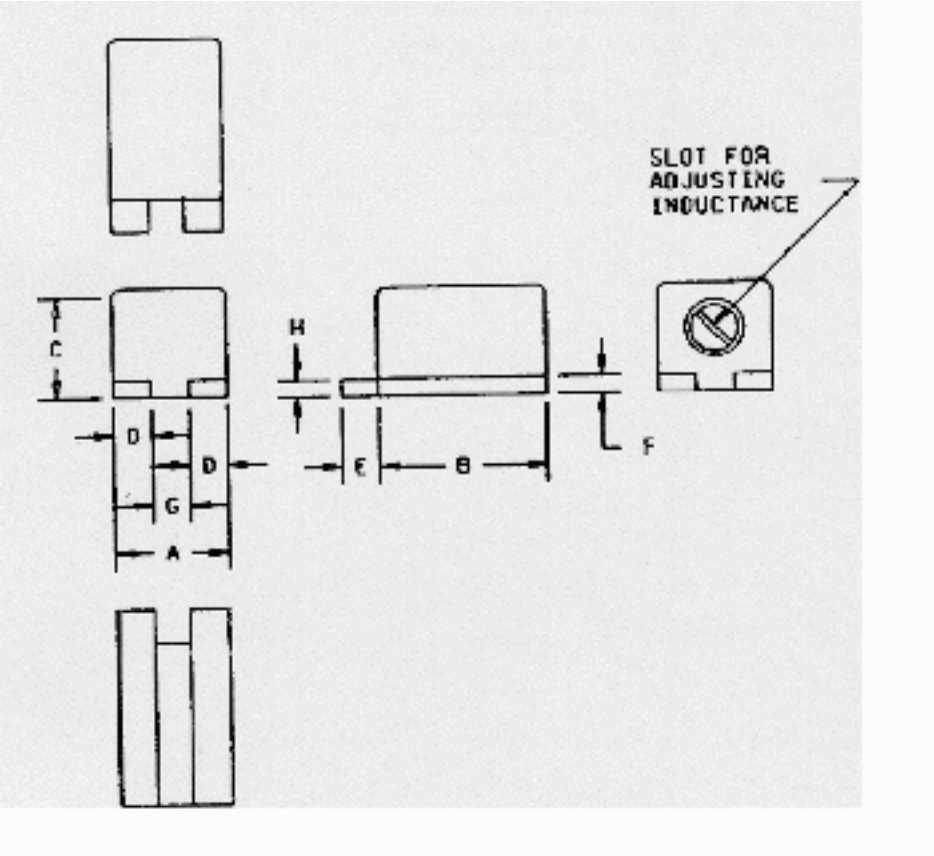

A	B	C	D	E	F	G	H
0.115 max.	0.170 max.	0.115 max.	0.030+/-0.005	0.040 +0.015, -0.010	0.007+/-0.003	0.038+/-0.010	0.005+/-0.002

M83446/09

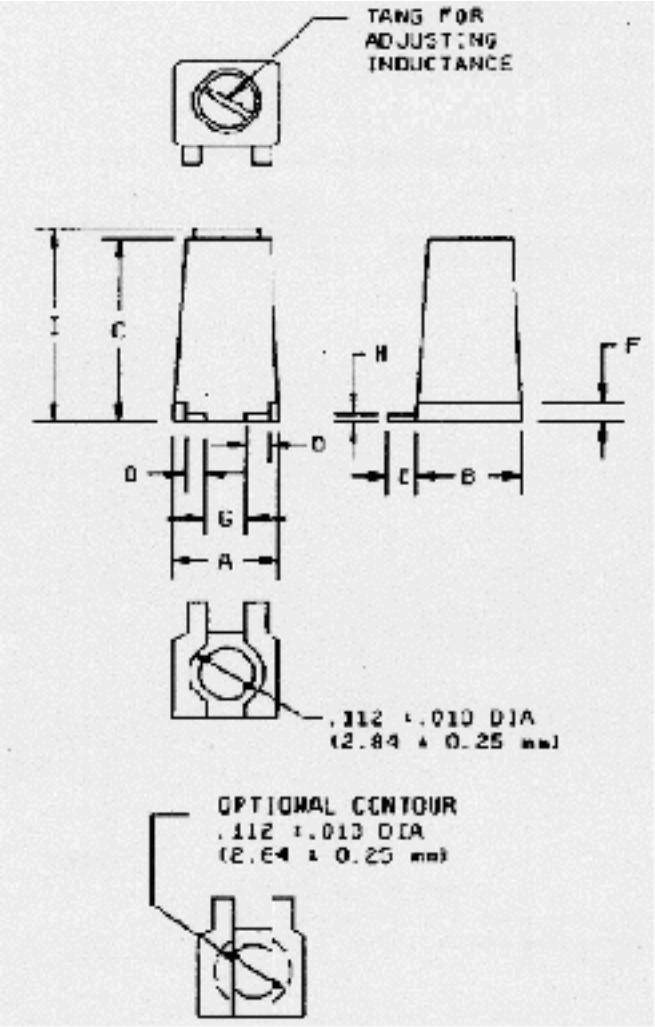

A	B	C	D	E	F	G	H	I
0.165 max.	0.130 max.	0.225 max.	0.030+/-0.010	0.040 +0.015, -0.010	0.020+/-0.005	0.073 min.	0.005+/-0.002	0.250 max.

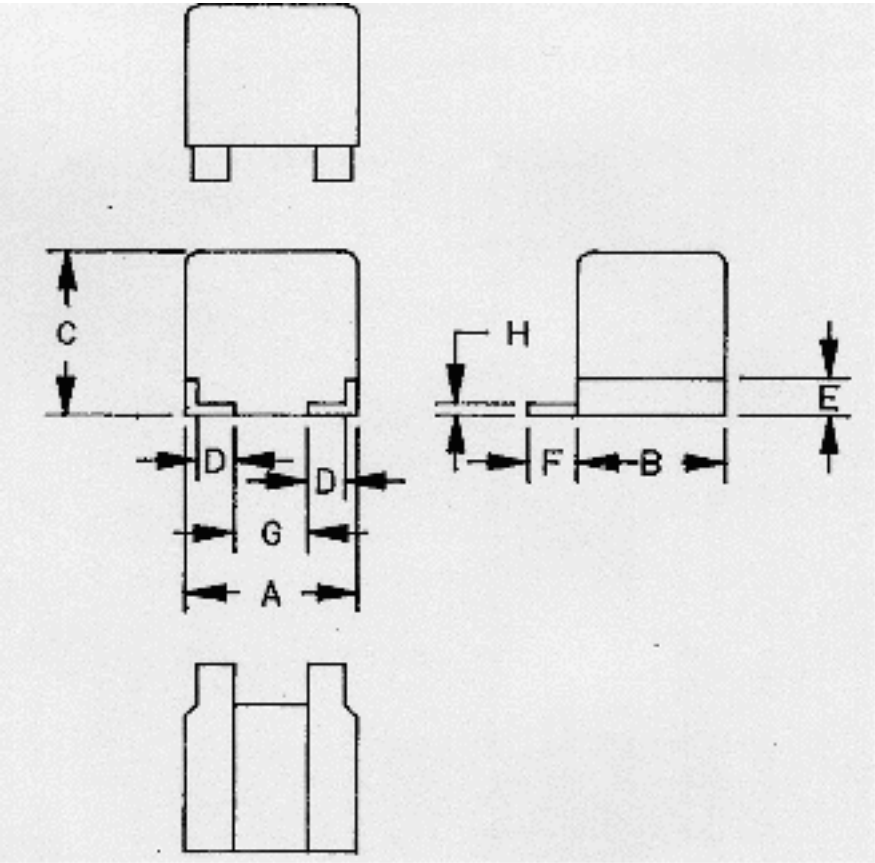

A	B	C	D	E	F	G	H
0.155+/-0.008	0.125+/-0.008	0.130 max.	0.037+/-0.003	0.020+/-0.005	0.040 +0.015, -0.010	0.073 min.	0.005+/-0.002

M83446/04 Fixed, Chip Coils

Click Here for Outline Dimensions

Part Number	Inductance (uH)	Q (Min.)	Inductance Tolerance	Rated DC Current (mA)	Termination (#)	Level	Manufacturer
M83446/04-01#	0.10	30	+/-10%	880	A,B,C,E,F	2	API
M83446/04-02#	0.15	25	+/-10%	745	A,B,C,E,F	2	API
M83446/04-03#	0.18	25	+/-10%	695	A,B,C,E,F	2	API
M83446/04-04#	0.22	25	+/-10%	665	A,B,C,E,F	2	API
M83446/04-05#	0.27	25	+/-10%	650	A,B,C,E,F	2	API
M83446/04-06#	0.33	25	+/-10%	645	A,B,C,E,F	2	API
M83446/04-07#	0.39	22	+/-10%	635	A,B,C,E,F	2	API
M83446/04-08#	0.47	22	+/-10%	610	A,B,C,E,F	2	API
M83446/04-09#	0.56	22	+/-10%	590	A,B,C,E,F	2	API
M83446/04-10#	0.68	22	+/-10%	435	A,B,C,E,F	2	API
M83446/04-11#	0.82	22	+/-10%	430	A,B,C,E,F	2	API
M83446/04-12#	1.00	22	+/-10%	425	A,B,C,E,F	2	API
M83446/04-13#	1.2	22	+/-10%	360	A,B,C,E,F	2	API
M83446/04-14#	1.5	22	+/-10%	340	A,B,C,E,F	2	API
M83446/04-15#	1.8	22	+/-10%	325	A,B,C,E,F	2	API
M83446/04-16#	2.2	22	+/-10%	310	A,B,C,E,F	2	API
M83446/04-17#	2.7	24	+/-10%	290	A,B,C,E,F	2	API
M83446/04-18#	3.3	24	+/-10%	260	A,B,C,E,F	2	API
M83446/04-19#	3.9	24	+/-10%	250	A,B,C,E,F	2	API
M83446/04-20#	4.7	24	+/-10%	230	A,B,C,E,F	2	API
M83446/04-21#	5.6	22	+/-10%	220	A,B,C,E,F	2	API
M83446/04-22#	6.8	22	+/-10%	210	A,B,C,E,F	2	API
M83446/04-23#	8.2	22	+/-10%	195	A,B,C,E,F	2	API
M83446/04-24#	10.0	24	+/-10%	165	A,B,C,E,F	2	API
M83446/04-25#	12.0	25	+/-10%	160	A,B,C,E,F	2	API
M83446/04-26#	15.0	25	+/-10%	135	A,B,C,E,F	2	API
M83446/04-27#	18.0	25	+/-10%	130	A,B,C,E,F	2	API
M83446/04-28#	22.0	25	+/-10%	125	A,B,C,E,F	2	API
M83446/04-29#	27.0	25	+/-10%	120	A,B,C,E,F	2	API
M83446/04-30#	0.010	60	+/-20%	1270	A,B,C,E,F	2	API
M83446/04-31#	0.015	55	+/-20%	1110	A,B,C,E,F	2	API
M83446/04-32#	0.022	50	+/-20%	950	A,B,C,E,F	2	API
M83446/04-33#	0.033	48	+/-20%	900	A,B,C,E,F	2	API
M83446/04-34#	0.047	42	+/-20%	820	A,B,C,E,F	2	API
M83446/04-35#	0.068	36	+/-20%	705	A,B,C,E,F	2	API
M83446/04-36#	0.100	32	+/-20%	650	A,B,C,E,F	2	API

M83446/05 Fixed, Chip Coils

Click Here for Outline Dimensions

Part Number	Inductance (uH)	Q (Min.)	Inductance Tolerance	Rated DC Current (mA)	Termination (#)	Level	Manufacturer
M83446/05-01#	0.010	60	+/-10%	750	A,B,C,D,E,F	2	ACM,MAG,VAN

M83446/05-02#	0.012	60	+/-10%	750	A,B,C,D,E,F	2	ACM,MAG,VAN
M83446/05-03#	0.015	60	+/-10%	750	A,B,C,D,E,F	2	ACM,MAG,VAN
M83446/05-04#	0.018	60	+/-10%	750	A,B,C,D,E,F	2	ACM,MAG,VAN
M83446/05-05#	0.022	51	+/-10%	750	A,B,C,D,E,F	2	ACM,MAG,VAN
M83446/05-06#	0.027	51	+/-10%	750	A,B,C,D,E,F	2	ACM,MAG,VAN
M83446/05-07#	0.033	47	+/-10%	640	A,B,C,D,E,F	2	ACM,MAG,VAN
M83446/05-08#	0.039	47	+/-10%	600	A,B,C,D,E,F	2	ACM,MAG,VAN
M83446/05-09#	0.047	47	+/-10%	550	A,B,C,D,E,F	2	ACM,MAG,VAN
M83446/05-10#	0.056	47	+/-10%	520	A,B,C,D,E,F	2	ACM,MAG,VAN
M83446/05-11#	0.068	47	+/-10%	480	A,B,C,D,E,F	2	ACM,MAG,VAN
M83446/05-12#	0.082	47	+/-10%	470	A,B,C,D,E,F	2	ACM,MAG,VAN
M83446/05-13#	0.10	47	+/-10%	470	A,B,C,D,E,F	2	ACM,MAG,VAN
M83446/05-14#	0.12	47	+/-10%	470	A,B,C,D,E,F	2	ACM,MAG,VAN
M83446/05-15#	0.15	47	+/-10%	450	A,B,C,D,E,F	2	ACM,MAG,VAN
M83446/05-16#	0.18	51	+/-10%	430	A,B,C,D,E,F	2	ACM,MAG,VAN
M83446/05-17#	0.22	51	+/-10%	350	A,B,C,D,E,F	2	ACM,MAG,VAN
M83446/05-18#	0.27	51	+/-10%	310	A,B,C,D,E,F	2	ACM,MAG,VAN
M83446/05-19#	0.33	51	+/-10%	280	A,B,C,D,E,F	2	ACM,MAG,VAN
M83446/05-20#	0.39	47	+/-10%	240	A,B,C,D,E,F	2	ACM,MAG,VAN
M83446/05-21#	0.47	47	+/-10%	230	A,B,C,D,E,F	2	ACM,MAG,VAN
M83446/05-22#	0.56	52	+/-10%	220	A,B,C,D,E,F	2	ACM,MAG,VAN
M83446/05-23#	0.68	52	+/-10%	210	A,B,C,D,E,F	2	ACM,MAG,VAN
M83446/05-24#	0.82	52	+/-10%	200	A,B,C,D,E,F	2	ACM,MAG,VAN
M83446/05-25#	1.00	52	+/-10%	190	A,B,C,D,E,F	2	ACM,MAG,VAN
M83446/05-26#	1.20	42	+/-10%	180	A,B,C,D,E,F	2	ACM,MAG,VAN
M83446/05-27#	1.50	42	+/-10%	160	A,B,C,D,E,F	2	ACM,MAG,VAN
M83446/05-28#	1.80	48	+/-10%	150	A,B,C,D,E,F	2	ACM,MAG,VAN
M83446/05-29#	2.20	48	+/-10%	140	A,B,C,D,E,F	2	ACM,MAG,VAN
M83446/05-30#	2.70	48	+/-10%	130	A,B,C,D,E,F	2	ACM,MAG,VAN
M83446/05-31#	3.30	48	+/-10%	120	A,B,C,D,E,F	2	ACM,MAG,VAN
M83446/05-32#	3.90	48	+/-10%	110	A,B,C,D,E,F	2	ACM,MAG,VAN
M83446/05-33#	4.70	48	+/-10%	100	A,B,C,D,E,F	2	ACM,MAG,VAN
M83446/05-34#	5.60	48	+/-10%	100	A,B,C,D,E,F	2	ACM,MAG,VAN
M83446/05-35#	6.80	46	+/-10%	98	A,B,C,D,E,F	2	ACM,MAG,VAN
M83446/05-36#	8.20	46	+/-10%	95	A,B,C,D,E,F	2	ACM,MAG,VAN
M83446/05-37#	10.0	46	+/-10%	87	A,B,C,D,E,F	2	ACM,MAG,VAN

M83446/07 Variable, Chip Coils

Click Here for Outline Dimensions

Part Number	Inductance (uH)	Q (Min.)	Rated DC Current (mA)	Termination (#)	Level	Manufacturer
M83446/07-01#	0.016-0.019	52	750	A,B,C,D,E,F	2	VAN
M83446/07-02#	0.019-0.024	55	750	A,B,C,D,E,F	2	VAN
M83446/07-03#	0.024-0.030	55	750	A,B,C,D,E,F	2	VAN
M83446/07-04#	0.029-0.037	52	750	A,B,C,D,E,F	2	VAN

M83446/07-05#	0.035-0.043	52	750	A,B,C,D,E,F	2	VAN
M83446/07-06#	0.042-0.052	52	750	A,B,C,D,E,F	2	VAN
M83446/07-07#	0.049-0.062	55	750	A,B,C,D,E,F	2	VAN
M83446/07-08#	0.060-0.076	55	750	A,B,C,D,E,F	2	VAN
M83446/07-09#	0.072-0.092	55	640	A,B,C,D,E,F	2	VAN
M83446/07-10#	0.090-0.110	50	600	A,B,C,D,E,F	2	VAN
M83446/07-11#	0.105-0.135	50	600	A,B,C,D,E,F	2	VAN
M83446/07-12#	0.13-0.17	45	480	A,B,C,D,E,F	2	VAN
M83446/07-13#	0.16-0.20	454	450	A,B,C,D,E,F	2	VAN
M83446/07-14#	0.19-0.25	45	400	A,B,C,D,E,F	2	VAN
M83446/07-15#	0.24-0.31	45	350	A,B,C,D,E,F	2	VAN
M83446/07-16#	0.29-0.37	45	300	A,B,C,D,E,F	2	VAN
M83446/07-17#	0.35-0.44	42	260	A,B,C,D,E,F	2	VAN
M83446/07-18#	0.42-0.52	40	250	A,B,C,D,E,F	2	VAN
M83446/07-19#	0.50-0.62	40	230	A,B,C,D,E,F	2	VAN
M83446/07-20#	0.60-0.76	40	180	A,B,C,D,E,F	2	VAN
M83446/07-21#	0.73-0.92	40	160	A,B,C,D,E,F	2	VAN
M83446/07-22#	0.88-1.12	40	120	A,B,C,D,E,F	2	VAN
M83446/07-23#	1.05-1.35	40	115	A,B,C,D,E,F	2	VAN
M83446/07-24#	1.3-1.7	22	90	A,B,C,D,E,F	2	VAN
M83446/07-25#	1.5-2.0	22	85	A,B,C,D,E,F	2	VAN
M83446/07-26#	1.9-2.5	19	62	A,B,C,D,E,F	2	VAN
M83446/07-27#	2.4-3.0	19	60	A,B,C,D,E,F	2	VAN
M83446/07-28#	2.9-3.7	19	55	A,B,C,D,E,F	2	VAN
M83446/07-29#	3.5-4.3	19	50	A,B,C,D,E,F	2	VAN
M83446/07-30#	4.2-5.2	19	100	A,B,C,D,E,F	2	VAN
M83446/07-31#	5.0-6.2	22	100	A,B,C,D,E,F	2	VAN
M83446/07-32#	6.0-7.5	22	85	A,B,C,D,E,F	2	VAN
M83446/07-33#	7.3-9.1	21	75	A,B,C,D,E,F	2	VAN
M83446/07-34#	8.8-11.2	21	70	A,B,C,D,E,F	2	VAN
M83446/07-35#	10.6-13.4	21	65	A,B,C,D,E,F	2	VAN
M83446/07-36#	13.2-16.8	22	60	A,B,C,D,E,F	2	VAN
M83446/07-37#	15.8-20.1	22	47	A,B,C,D,E,F	2	VAN
M83446/07-38#	19.4-24.6	22	45	A,B,C,D,E,F	2	VAN
M83446/07-39#	23.7-30.2	22	43	A,B,C,D,E,F	2	VAN
M83446/07-40#	29.1-36.9	22	42	A,B,C,D,E,F	2	VAN
M83446/07-41#	34.3-43.6	22	37	A,B,C,D,E,F	2	VAN
M83446/07-42#	41.3-52.6	22	35	A,B,C,D,E,F	2	VAN
M83446/07-43#	49.2-62.7	22	34	A,B,C,D,E,F	2	VAN
M83446/07-44#	59.8-76.1	22	32	A,B,C,D,E,F	2	VAN

M83446/09 Variable, Chip Coils

Click Here for Outline Dimensions

Part Number	Inductance (uH)	Q (Min.)	Rated DC Current (mA)	Termination (#)	Level	Manufacturer

M83446/09-01#	0.015-0.021	50	750	A,B,C,D,E,F	2	VAN
M83446/09-02#	0.018-0.026	55	750	A,B,C,D,E,F	2	VAN
M83446/09-03#	0.022-0.032	55	750	A,B,C,D,E,F	2	VAN
M83446/09-04#	0.027-0.039	55	750	A,B,C,D,E,F	2	VAN
M83446/09-05#	0.033-0.047	55	750	A,B,C,D,E,F	2	VAN
M83446/09-06#	0.039-0.056	55	750	A,B,C,D,E,F	2	VAN
M83446/09-07#	0.047-0.068	55	700	A,B,C,D,E,F	2	VAN
M83446/09-08#	0.055-0.083	55	700	A,B,C,D,E,F	2	VAN
M83446/09-09#	0.067-0.099	55	645	A,B,C,D,E,F	2	VAN
M83446/09-10#	0.080-0.120	55	645	A,B,C,D,E,F	2	VAN
M83446/09-11#	0.096-0.144	50	600	A,B,C,D,E,F	2	VAN
M83446/09-12#	0.120-0.180	50	560	A,B,C,D,E,F	2	VAN
M83446/09-13#	0.140-0.220	50	525	A,B,C,D,E,F	2	VAN
M83446/09-14#	0.170-0.270	50	500	A,B,C,D,E,F	2	VAN
M83446/09-15#	0.210-0.330	50	400	A,B,C,D,E,F	2	VAN
M83446/09-16#	0.260-0.400	50	360	A,B,C,D,E,F	2	VAN
M83446/09-17#	0.320-0.470	40	300	A,B,C,D,E,F	2	VAN
M83446/09-18#	0.370-0.570	40	280	A,B,C,D,E,F	2	VAN
M83446/09-19#	0.460-0.680	40	250	A,B,C,D,E,F	2	VAN
M83446/09-20#	0.540-8.20	40	200	A,B,C,D,E,F	2	VAN
M83446/09-21#	0.680-1.000	40	180	A,B,C,D,E,F	2	VAN
M83446/09-22#	0.750-1.250	40	160	A,B,C,D,E,F	2	VAN
M83446/09-23#	0.900-1.500	40	150	A,B,C,D,E,F	2	VAN
M83446/09-24#	1.13-1.87	35	135	A,B,C,D,E,F	2	VAN
M83446/09-25#	1.35-2.25	35	120	A,B,C,D,E,F	2	VAN
M83446/09-26#	1.65-2.75	35	100	A,B,C,D,E,F	2	VAN
M83446/09-27#	2.02-3.37	25	90	A,B,C,D,E,F	2	VAN
M83446/09-28#	2.48-4.12	25	80	A,B,C,D,E,F	2	VAN
M83446/09-29#	2.92-4.87	25	80	A,B,C,D,E,F	2	VAN
M83446/09-30#	3.52-5.88	25	80	A,B,C,D,E,F	2	VAN
M83446/09-31#	4.20-7.00	22	75	A,B,C,D,E,F	2	VAN
M83446/09-32#	5.10-8.50	22	75	A,B,C,D,E,F	2	VAN
M83446/09-33#	6.10-10.2	22	72	A,B,C,D,E,F	2	VAN
M83446/09-34#	7.50-12.5	22	72	A,B,C,D,E,F	2	VAN
M83446/09-35#	9.00-15.0	22	70	A,B,C,D,E,F	2	VAN
M83446/09-36#	11.2-18.7	22	65	A,B,C,D,E,F	2	VAN
M83446/09-37#	13.5-22.5	22	55	A,B,C,D,E,F	2	VAN
M83446/09-38#	16.5-27.5	22	50	A,B,C,D,E,F	2	VAN
M83446/09-39#	20.2-31.3	22	45	A,B,C,D,E,F	2	VAN
M83446/09-40#	24.7-41.2	22	43	A,B,C,D,E,F	2	VAN
M83446/09-41#	29.2-48.8	22	42	A,B,C,D,E,F	2	VAN
M83446/09-42#	35.2-58.8	22	40	A,B,C,D,E,F	2	VAN
M83446/09-43#	42.0-70.0	22	36	A,B,C,D,E,F	2	VAN
M83446/09-44#	51.0-85.0	22	32	A,B,C,D,E,F	2	VAN
M83446/09-45#	62.0-102.0	25	28	A,B,C,D,E,F	2	VAN
M83446/09-46#	75.0-125.0	25	25	A,B,C,D,E,F	2	VAN
M83446/09-47#	90.0-150.0	25	22	A,B,C,D,E,F	2	VAN

M83446/10 Fixed, Chip Coils

Click Here for Outline Dimensions

Part Number	Inductance (uH)	Q (Min.)	Inductance Tolerance	Rated DC Current (mA)	Termination (#)	Level	Manufacturer
M83446/10-01#	0.010	60	+/-10%	1000	A,B,C,D,E,F	2	ACM,MAG,VAN
M83446/10-02#	0.012	70	+/-10%	1000	A,B,C,D,E,F	2	ACM,MAG,VAN
M83446/10-03#	0.015	75	+/-10%	1000	A,B,C,D,E,F	2	ACM,MAG,VAN
M83446/10-04#	0.018	75	+/-10%	1000	A,B,C,D,E,F	2	ACM,MAG,VAN
M83446/10-05#	0.022	60	+/-10%	1000	A,B,C,D,E,F	2	ACM,MAG,VAN
M83446/10-06#	0.027	60	+/-10%	1000	A,B,C,D,E,F	2	ACM,MAG,VAN
M83446/10-07#	0.033	60	+/-10%	1000	A,B,C,D,E,F	2	ACM,MAG,VAN
M83446/10-08#	0.039	60	+/-10%	900	A,B,C,D,E,F	2	ACM,MAG,VAN
M83446/10-09#	0.047	65	+/-10%	900	A,B,C,D,E,F	2	ACM,MAG,VAN
M83446/10-10#	0.056	65	+/-10%	900	A,B,C,D,E,F	2	ACM,MAG,VAN
M83446/10-11#	0.068	65	+/-10%	840	A,B,C,D,E,F	2	ACM,MAG,VAN
M83446/10-12#	0.082	65	+/-10%	840	A,B,C,D,E,F	2	ACM,MAG,VAN
M83446/10-13#	0.10	65	+/-10%	840	A,B,C,D,E,F	2	ACM,MAG,VAN
M83446/10-14#	0.12	65	+/-10%	840	A,B,C,D,E,F	2	ACM,MAG,VAN
M83446/10-15#	0.15	75	+/-10%	790	A,B,C,D,E,F	2	ACM,MAG,VAN
M83446/10-16#	0.18	75	+/-10%	790	A,B,C,D,E,F	2	ACM,MAG,VAN
M83446/10-17#	0.22	70	+/-10%	790	A,B,C,D,E,F	2	ACM,MAG,VAN
M83446/10-18#	0.27	70	+/-10%	700	A,B,C,D,E,F	2	ACM,MAG,VAN
M83446/10-19#	0.33	70	+/-10%	700	A,B,C,D,E,F	2	ACM,MAG,VAN
M83446/10-20#	0.39	70	+/-10%	700	A,B,C,D,E,F	2	ACM,MAG,VAN
M83446/10-21#	0.47	70	+/-10%	590	A,B,C,D,E,F	2	ACM,MAG,VAN
M83446/10-22#	0.56	70	+/-10%	510	A,B,C,D,E,F	2	ACM,MAG,VAN
M83446/10-23#	0.68	70	+/-10%	430	A,B,C,D,E,F	2	ACM,MAG,VAN
M83446/10-24#	0.82	75	+/-10%	400	A,B,C,D,E,F	2	ACM,MAG,VAN
M83446/10-25#	1.00	75	+/-10%	380	A,B,C,D,E,F	2	ACM,MAG,VAN
M83446/10-26#	1.20	65	+/-10%	330	A,B,C,D,E,F	2	ACM,MAG,VAN
M83446/10-27#	1.50	65	+/-10%	290	A,B,C,D,E,F	2	ACM,MAG,VAN
M83446/10-28#	1.80	65	+/-10%	260	A,B,C,D,E,F	2	ACM,MAG,VAN
M83446/10-29#	2.20	65	+/-10%	230	A,B,C,D,E,F	2	ACM,MAG,VAN
M83446/10-30#	2.70	65	+/-10%	210	A,B,C,D,E,F	2	ACM,MAG,VAN
M83446/10-31#	3.30	60	+/-10%	200	A,B,C,D,E,F	2	ACM,MAG,VAN
M83446/10-32#	3.90	60	+/-10%	180	A,B,C,D,E,F	2	ACM,MAG,VAN
M83446/10-33#	4.70	60	+/-10%	170	A,B,C,D,E,F	2	ACM,MAG,VAN
M83446/10-34#	5.60	65	+/-10%	160	A,B,C,D,E,F	2	ACM,MAG,VAN
M83446/10-35#	6.80	65	+/-10%	140	A,B,C,D,E,F	2	ACM,MAG,VAN
M83446/10-36#	8.20	65	+/-10%	130	A,B,C,D,E,F	2	ACM,MAG,VAN
M83446/10-37#	10.0	65	+/-10%	120	A,B,C,D,E,F	2	ACM,MAG,VAN
M83446/10-38#	12.0	60	+/-10%	118	A,B,C,D,E,F	2	ACM,MAG,VAN
M83446/10-39#	15.0	60	+/-10%	115	A,B,C,D,E,F	2	ACM,MAG,VAN
M83446/10-40#	18.0	60	+/-10%	114	A,B,C,D,E,F	2	ACM,MAG,VAN

M83446/10-41#	22.0	60	+/-10%	113	A,B,C,D,E,F	2	ACM,MAG,VAN
M83446/10-42#	27.0	65	+/-10%	110	A,B,C,D,E,F	2	ACM,MAG,VAN
M83446/10-43#	33.0	65	+/-10%	100	A,B,C,D,E,F	2	ACM,MAG,VAN
M83446/10-44#	39.0	65	+/-10%	84	A,B,C,D,E,F	2	ACM,MAG,VAN
M83446/10-45#	47.0	70	+/-10%	79	A,B,C,D,E,F	2	ACM,MAG,VAN
M83446/10-46#	56.0	70	+/-10%	70	A,B,C,D,E,F	2	ACM,MAG,VAN
M83446/10-47#	68.0	65	+/-10%	67	A,B,C,D,E,F	2	ACM,MAG,VAN
M83446/10-48#	82.0	60	+/-10%	64	A,B,C,D,E,F	2	ACM,MAG,VAN
M83446/10-49#	100.0	60	+/-10%	62	A,B,C,D,E,F	2	ACM,MAG,VAN
M83446/10-50#	120.0	40	+/-10%	59	A,B,C,D,E,F	2	ACM,MAG,VAN
M83446/10-51#	150.0	40	+/-10%	56	A,B,C,D,E,F	2	ACM,MAG,VAN
M83446/10-52#	180.0	40	+/-10%	52	A,B,C,D,E,F	2	ACM,MAG,VAN
M83446/10-53#	220.0	40	+/-10%	45	A,B,C,D,E,F	2	ACM,MAG,VAN
M83446/10-54#	270.0	40	+/-10%	44	A,B,C,D,E,F	2	ACM,MAG,VAN
M83446/10-55#	330.0	40	+/-10%	41	A,B,C,D,E,F	2	ACM,MAG,VAN
M83446/10-56#	390.0	40	+/-10%	39	A,B,C,D,E,F	2	ACM,MAG,VAN
M83446/10-57#	470.0	35	+/-10%	37	A,B,C,D,E,F	2	ACM,MAG,VAN
M83446/10-58#	560.0	35	+/-10%	33	A,B,C,D,E,F	2	ACM,MAG,VAN
M83446/10-59#	680.0	35	+/-10%	30	A,B,C,D,E,F	2	ACM,MAG,VAN
M83446/10-60#	820.0	30	+/-10%	26	A,B,C,D,E,F	2	ACM,MAG,VAN
M83446/10-61#	1000.0	30	+/-10%	25	A,B,C,D,E,F	2	ACM,MAG,VAN

Coil and Inductor Manufacturer Listing and Links to Manufactures Homepages

Click

here

for detailed information regarding part technologies offered by manufacturers listed in the

PSAP

Core Suppliers List

Listed below are links to manufacturer data sites that may provide additional part related information. The linked sites are not under the control of NPSL and NASA is not responsible for information contained in the linked site. We are providing these links for your convenience only.

ACM

Coast/Advanced Chip Magnetics

5301 W. Washington Boulevard

Los Angeles, CA 90016

CAGE Code: 22558

Tel: 323-936-8028

API

American Precision Industries, Inc. (Delevan Division)

270 Quaker Road

East Aurora, NY 14052

CAGE Code: 99800

Tel:

DAL

Dale Electronics, Inc.
East Highway 50
Yankton, SD 57078
CAGE Code: 09969
Tel:
MAG
Magnespec, Inc.
3037 E. Harcourt Street
Rancho Dominguez, CA 90221
CAGE Code: 53854
Tel:
PIC
Piconics, Inc.
20 Cummings Road
Tyngsboro, MA 01879
CAGE Code: 26618
Tel:
VAN
Vanguard Electronics Company, Inc.
1480 West 178th Street
Gardena, CA 90248
CAGE Code: 03550
Tel:

NASA Parts Selection List (NPSL)
MICROCIRCUITS
(
Last Updated: April 21, 2003
)

NOTE: Unless specifically stated within the parts selection tables of the NPSL, listing of a device technology herein does NOT imply/guarantee Radiation Hardness Assurance (RHA). Applications concerned with a de

Level 1 Microcircuits
Level 1 microcircuits are defined as those currently qualified to
MIL-PRF-38535 "Integrated Circuits (Microcircuits) Manufacturing, General Specification for" as
QML Class V
or,

MIL-M-38510 "Microcircuits, General Specification for" as

QPL JAN Class S

or,

Space quality source control drawings (SCDs), where QML/QPL does not exist, which meet all of the technical requirements of MIL-STD-883, Method 5004 and 5005 for a Class S device

European Space Agency

(ESA)

SCC Level B Lot Acceptance Level 2 (LA2)

National Space Development Agency of Japan

(NASDA) QTS Class I

Level 2 Microcircuits

Level 2 microcircuits are defined as those currently qualified to

MIL-PRF-38535 "Integrated Circuits (Microcircuits) Manufacturing, General Specification for"

as QML Class Q

or,

MIL-M-38510 "Microcircuits, General Specification for" as

QPL JAN Class B

, when modified/screened per mission requirements for space

European Space Agency

(ESA) SCC Level C [

Note 1

]

National Space Development Agency of Japan

(NASDA) QTS Class II

Notes:

1) ESA has gone to a single Level system based on ESA SCC Level B, so that new product will only be available as SCC Level B. ESA SCC Level C products may remain available for previously manufactured product while stocks last.

Useful Links:

The following links provide additional information to facilitate selection of qualified/available microcircuits

U.S. Military Specifications from the

Defense Supply Center Columbus (DSCC)

Qualified Manufacturers: QML-38535 and QPL-38510

Part Specifications: MIL-PRF-38535 and MIL-M-38510

European Space Agency SCC Specifications

U.S. Military Specification Microcircuit Part Number Explanation

"For Reference Only":

ARCHIVE of NPSL Detailed Microcircuit Listings

On April 21, 2003 the microcircuit section of the NASA Parts Selection List (NPSL) was updated to simplify the listing to show only the acceptable Levels (

see above

). This change has the effect of expanding upon the previous NPSL microcircuit section of acceptable part types without providing a detailed listing of part numbers and descriptions. Previous revisions of the NPSL microcircuit section used these same basic definitions for acceptable Levels, but also

included a detailed list of part numbers, descriptions and sources. Due to the constant state of change in availability of qualified microcircuit technologies and associated sources, this type of detailed listing within the NPSL was never able to remain current. For this reason future updates to the NPSL will no longer attempt to maintain such a detailed listing for microcircuits. For "reference only" the detailed listing from the past NPSL microcircuit section has been retained as an

archive

. Users of the NPSL are advised that the archived listing forms only a small subset of the device technologies considered acceptable per the NPSL guidelines. In addition, the archive is not being maintained, therefore users should consult the latest QML or QPL for current qualification status of these devices.

Parts

|

Packaging

|

Radiation

|

Publications

|

Calendar

|

Experts

Admin Login

|

Request Account

|

Feedback

|

Site Map

|

Help

|

Search

NEPP Program Manager:

Chuck Barnes, Jet Propulsion Laboratory

Responsible NASA Official:

Michael Sampson, NEPAG Manager

Website Comments:

Web Development Team

Last Modified:

July 23, 2002

AETD IT Security Banner

NASA Privacy Statement

NASA Parts Selection List (NPSL)

For REFERENCE ONLY:

ARCHIVE of Detailed Microcircuit Part Number Listings

The following sections contain an "archive" of the detailed microcircuit part number listings previously maintained in the NPSL. It is retained here "for reference only". On April 10, 2003, the NPSL adopted a new approach for defining acceptable microcircuits for Level 1 and Level 2 applications. The new approach defines Level 1 and 2 parts in the same manner as prescribed in this archive, but effectively expands the number of acceptable part types. Refer to the

New NPSL Guidelines for Acceptable Microcircuits

for Level 1 and 2 applications.

NOTE: Unless specifically stated within the parts selection tables of the NPSL, listing of a device technology herein does NOT imply/guarantee Radiation Hardness Assurance (RHA). Applications concerned with a de

SUMMARY OF MICROCIRCUITS

(ARCHIVE)

Specification	Description	Type

MIL-PRF-38535, MIL-M-38510	Microcircuits	Monolithic
MIL-PRF-38534	Microcircuits	Hybrids
MIL-PRF-38535	Microcircuits (older technology parts)	Monolithic
NASDA-QTS-38510A	Microcircuits	General Information

Parts

|

Packaging

|

Radiation

|

Publications

|

Calendar

|

Experts

Admin Login

|

Request Account

|

Feedback

|

Site Map

|

Help

|

Search

NEPP Program Manager:

Chuck Barnes, Jet Propulsion Laboratory

Responsible NASA Official:

Michael Sampson, NEPAG Manager

Website Comments:

Web Development Team

Last Modified:

July 23, 2002

AETD IT Security Banner

NASA Privacy Statement

Part Number/Procurement Details

Example 1:

MICROCIRCUITS, MIL-PRF-38535

QML - One Part-One Part Number SMD

MIL-PRF-38535 Part Number Explanation.

5962A9215305#*X where,

5962

Federal Stock Class Designator (1)

A

"A" indicates no Radiation Hardness Assurance (RHA)

92153

Drawing Designator

05

Device Type

#

Device Class:

V = Level 1

Q = Level 2

M = Level 3

*

Case Outline (For specific choices of package styles refer to detail device drawing or Standard Military Drawing (SMD)

X

Lead Finish (MIL-PRF-38535)

(1)

Drawings initiated prior to 1986 may not contain a federal stock class designator

Example 2:

MICROCIRCUITS, MIL-PRF-38535

(MIL-M-38510)

MIL-M-38510 Part Number Explanation.

M38510/65001#*X where,

M38510

Military Specification Number (MIL-M-38510 has been incorporated into MIL-I-38535)

/, -

A "/" or "-" indicates no Radiation Hardness Assurance (RHA).

650

Detail Device Procurement Specification Number

01

Device Type

#

Device Class:

S = Level 1

B = Level 2

*

Case Outline (For specific choices of package styles refer to detail device procurement specification)

X

Lead Finish (MIL-PRF-38535)

Example 3:

MICROCIRCUITS, MIL-PRF-38534 (HYBRIDS)

QML - One Part-One Part Number SMD

MIL-PRF-38534 Part Number Explanation.

5962H9215305#*X where,

5962

Federal Stock Class Designator (1)

H

Indicates Radiation Hardness Assurance (RHA) level.

92153

Drawing Designator

01

Device Type

#

Device Class:

K = Level 1

H = Level 2

*

Case Outline (For specific choices of package styles refer to detail device procurement specification)

X

Lead Finish (MIL-PRF-38535)

(1)

Drawings initiated prior to 1986 may not contain a federal stock class designator

LEAD FINISH

Lead Finish Designator	Finish
A	Hot solder dip
B	Tin plating
C	Gold plating
D	Palladium plating

Radiation Hardness Assurance Designator

RHA Designator	Total Ionizing Dose [RAD (Si)]	Neutron Fluence (n/cm**2)

A, /, or -	No RHA	No RHA
M	3 x 10**3	2 x 10**12
D	1 x 10**4	2 x 10**12
P	3 x 10**4	2 x 10**12
L	5 x 10**4	2 x 10**12
R	1 x 10**5	2 x 10**12
F	3 x 10**5	2 x 10**12
G	5 x 10**5	2 x 10**12
H	1 x 10**6	2 x 10**12

NOTE: Unless specifically stated within the parts selection tables of the NPSL, listing of a device technology herein does NOT imply/guarantee Radiation Hardness Assurance (RHA). Applications concerned with a device's ability to tolerate exposure to various forms of space radiation (e.g., total ionizing dose, single event effects, etc.) should be reviewed and have the device assessed by the Program's radiation assurance experts. The following resources may also be consulted for initial guidance:

NASA Goddard Radiation Effects and Analysis

Jet Propulsion Laboratory Radiation Effects

NASA Parts Selection List (NPSL)

Older Technology Parts

NOTE: Unless specifically stated within the parts selection tables of the NPSL, listing of a device technology herein does NOT imply/guarantee Radiation Hardness Assurance (RHA). Applications concerned with a device's ability to tolerate exposure to various forms of space radiation (e.g., total ionizing dose, single event effects, etc.) should be reviewed and have the device assessed by the Program's radiation assurance experts. The following resources may also be consulted for initial guidance:

NASA Goddard Radiation Effects and Analysis

Jet Propulsion Laboratory Radiation Effects

Description
CMOS, Digital, High Speed
CMOS, Digital, High Speed, TTL Compatible

Parts

|

Packaging

|

Radiation

|

Publications

|

Calendar

|

Experts

Admin Login

|

Request Account

|

Feedback

|

Site Map

|

Help

|

Search

NEPP Program Manager:

Chuck Barnes, Jet Propulsion Laboratory

Responsible NASA Official:

Michael Sampson, NEPAG Manager

Website Comments:

Web Development Team

Last Modified:

July 23, 2002

AETD IT Security Banner

NASA Privacy Statement

Home

|

NASA Parts Selection List (NPSL)

| Monolithic Microcircuits

About NPSL

Prohibited Materials

Parts Selection Table of Contents

Capacitors

Circuit Protection Devices

Fuses

Connectors

Filters

Inductors

Microcircuits

NEW!

Monolithics

Hybrids

Resistors

Semiconductors

(Summary)

Diodes

Transistors

Thermistors

Wire and Cable

NASA Parts Selection List (NPSL)

NOTE: Unless specifically stated within the parts selection tables of the NPSL, listing of a device technology herein does NOT imply/guarantee Radiation Hardness Assurance (RHA). Applications concerned with a device's ability to tolerate exposure to various forms of space radiation (e.g., total ionizing dose, single event effects, etc.) should be reviewed and have the device assessed by the Program's radiation assurance experts. The following resources may also be consulted for initial guidance:

NASA Goddard Radiation Effects and Analysis

Jet Propulsion Laboratory Radiation Effects

Microcircuits

(Monolithic)

Digital, Glue-Logic, BIPOLAR --

LS, ALS, ABT

Digital, Glue-Logic, ADVANCED CMOS--
AC, ACT, ACQ, ACTQ
Digital, CMOS, Radiation Hardened (SOS) --
HCS, HCTS
Digital, CMOS, Radiation Hardened (Bulk and SOS) --
ACS, ACTS
Memories, CMOS --
PROMs
Memories, CMOS --
SRAMs
Memories, CMOS -- DRAMs (under construction)
Microprocessors and Peripherals --
MOS
Microcontrollers --
CMOS
Application Specific Integrated Circuits --
(ASICs)
Programmable Logic Devices (PLDs) and Field Programmable Gate Arrays --
(FPGAs)
Microcircuits, Linear --
BIPOLAR and CMOS
Interface/Bus Controllers --
CMOS
CMOS, Digital, High Speed (older technology parts) --
HC
CMOS, Digital, High Speed, TTL Compatible (older technology parts) --
HCT
NASDA Qualified Microcircuits and Semiconductors --
General Information
NOTE:
The activity responsible for the MIL-PRF-38535, MIL-PRF-38534, and MIL-M-38510 Qualified parts is the Defence Supply Center Columbus (DSCC).
The activity responsible for the QTS-38510A qualified parts is the National Space Development Agency of Japan (NASDA).
Parts
|
Packaging
|
Radiation
|
Publications
|

Calendar
|
Experts
Admin Login
|
Request Account
|
Feedback
|
Site Map
|
Help
|
Search
NEPP Program Manager:
Chuck Barnes, Jet Propulsion Laboratory
Responsible NASA Official:
Michael Sampson, NEPAG Manager
Website Comments:
Web Development Team
Last Modified:
August 8, 2001
AETD IT Security Banner
NASA Privacy Statement

Home
|
NASA Parts Selection List (NPLS)
|
Monolithic Microcircuits
| Digital, Glue-Logic, ADVANCED CMOS
About NPSL
Prohibited Materials
Parts Selection Table of Contents
Capacitors
Circuit Protection Devices
Fuses
Connectors
Filters
Inductors

Microcircuits

NEW!

Monolithics

Hybrids

Resistors

Semiconductors

(Summary)

Diodes

Transistors

Thermistors

Wire and Cable

NASA Parts Selection List (NPSL)

MICROCIRCUITS

(Monolithic)

DIGITAL, GLUE-LOGIC, ADVANCED CMOS

TYPE	TECHNOLOGY	TECHNOLOGY	TECHNOLOGY	TECHNOLOGY
	54AC	TTL Compatible 54ACT	Quiet Series 54ACQ	Quiet Series, TTL-Compatible 54ACTQ
Buffers/Drivers	X	X	X	X
Comparators	X	-	-	-
Counters	-	-	-	-
Flip-Flops	X	X	X	X
Gates	X	X	-	X
Latches	-	-	X	X
Shift Registers	X	-	-	-

Parts

|

Packaging

|

Radiation

|

Publications

|

Calendar

|

Experts

Admin Login

|

Request Account

|

Feedback

|

Site Map

|

Help

|

Search

NEPP Program Manager:

Chuck Barnes, Jet Propulsion Laboratory

Responsible NASA Official:

Michael Sampson, NEPAG Manager

Website Comments:

Web Development Team

Last Modified:

August 8, 2001

AETD IT Security Banner

NASA Privacy Statement

Home

|

NASA Parts Selection List (NPLS)

|

Monolithic Microcircuits

|

Digital, Glue-Logic, ADVANCED CMOS

|

Advanced CMOS (AC), Digital

Buffers/Drivers

About NPSL

Prohibited Materials

Parts Selection Table of Contents

Capacitors

Circuit Protection Devices

Fuses

Connectors

Filters

Inductors

Microcircuits

NEW!

Monolithics

Hybrids

Resistors

Semiconductors

(Summary)

Diodes

Transistors

Thermistors

Wire and Cable

NASA Parts Selection List (NPSL)

Radiation Test:

GSFC SEU Radiation Data Bank

JPL's Radiation Data Bank

Manufacturer:

Active Supplier Assessment Program (ASAP) Core Suppliers List

Part Procurement:

Part Number/Procurement details

Application Notes:

Applicable details

Last Update:

March 1998

Advanced CMOS (AC), Digital

Buffers/Drivers

Generic or Manufacturer Part #	Description	Procurement Specification	Manufacturer	Device Class or Flow	Rad-Hard Level	Notes
54AC240	Octal Buffer/Line Driver W/Inverse 3-State Outputs	M38510R75703#*X	NSC	S, B	100K	-
54AC241	Octal Buffer/Line Driver W/3-State Outputs	M38510R75704#*X	NSC	S, B	100K	-
54AC244	Octal Buffer/Line Driver W/3-State Outputs	M38510R75705#*X	NSC	S, B	100K	-
54AC245	Octal, Bi-Directional W/3-State Outputs	M38510R75503#*X	NSC	S, B	100K	-
54AC541	Octal Buffer/Line Driver W/3 State Outputs	M38510/75711#*X	NSC	S, B	-	-

Parts

|

Packaging

|

Radiation

|

Publications

|

Calendar

|
Experts
Admin Login
|
Request Account
|
Feedback
|
Site Map
|
Help
|
Search
NEPP Program Manager:
Chuck Barnes, Jet Propulsion Laboratory
Responsible NASA Official:
Michael Sampson, NEPAG Manager
Website Comments:
Web Development Team
Last Modified:
August 8, 2001
AETD IT Security Banner
NASA Privacy Statement

Home
|
NASA Parts Selection List (NPLS)
|
Monolithic Microcircuits
|
Digital, Glue-Logic, ADVANCED CMOS
| Advanced CMOS (AC), Digital
Comparators
About NPSL
Prohibited Materials
Parts Selection Table of Contents
Capacitors
Circuit Protection Devices
Fuses
Connectors

Filters

Inductors

Microcircuits

NEW!

Monolithics

Hybrids

Resistors

Semiconductors

(Summary)

Diodes

Transistors

Thermistors

Wire and Cable

NASA Parts Selection List (NPSL)

Radiation Test:

GSFC SEU Radiation Data Bank

JPL's Radiation Data Bank

Manufacturer:

Active Supplier Assessment Program (ASAP) Core Suppliers List

Part Procurement:

Part Number/Procurement details

Application Notes:

Applicable details

Last Update:

March 1998

Advanced CMOS (AC), Digital

Comparators

Generic or Manufacturer Part #	Description	Procurement Specification	Manufacturer	Device Class or Flow	Rad-Hard Level	Notes
54AC520	8-Bit Magnitude Comparator	5962-9091601#*X	NSC,TI	S, B	-	-
54AC521	8-Bit Identify Comparator	5962R9098501#*X	NSC	S, B	-	-

Parts

|

Packaging

|

Radiation

|

Publications
|
Calendar
|
Experts
Admin Login
|
Request Account
|
Feedback
|
Site Map
|
Help
|
Search
NEPP Program Manager:
Chuck Barnes, Jet Propulsion Laboratory
Responsible NASA Official:
Michael Sampson, NEPAG Manager
Website Comments:
Web Development Team
Last Modified:
August 8, 2001
AETD IT Security Banner
NASA Privacy Statement

Home
|
NASA Parts Selection List (NPLS)
|
Monolithic Microcircuits
|
Digital, Glue-Logic, ADVANCED CMOS
|
Advanced CMOS (AC), Digital
Flip Fops
About NPSL
Prohibited Materials
Parts Selection Table of Contents

Capacitors

Circuit Protection Devices

Fuses

Connectors

Filters

Inductors

Microcircuits

NEW!

Monolithics

Hybrids

Resistors

Semiconductors

(Summary)

Diodes

Transistors

Thermistors

Wire and Cable

NASA Parts Selection List (NPSL)

Radiation Test:

GSFC SEU Radiation Data Bank

JPL's Radiation Data Bank

Manufacturer:

Active Supplier Assessment Program (ASAP) Core Suppliers List

Part Procurement:

Part Number/Procurement details

Application Notes:

Applicable details

Last Update:

March 1998

Advanced CMOS (AC), Digital

Flip-Flops

Generic or Manufacturer Part #	Description	Procurement Specification	Manufacturer	Device Class or Flow	Rad-Hard Level	Notes
54AC74	Dual D-Type, Positive Edge-Trigger	M38510/75302#*X	NSC	S, B	-	-
54AC109	Dual JK Positive Edge-Trigger	M38510/75304#*X	NSC	S, B	-	-
54AC174	Hex D-Type Flip-Flop W/ Master Reset	M38510/75307#*X	NSC	S, B	-	-
54AC273	Octal D-Type Flip-Flop W/Reset	M38510/75601#*X	NSC	S, B	-	-
54AC373	D-Type Octal, W/3-State Outputs	M38510/75403#*X	NSC	S, B	-	-
54AC373	Octal Transparent, W/3-State Outputs	M38510R75403#*X	NSC	S, B	100K	-
54AC374	Octal D-Type W/3-State Outputs	M38510/75602#*X	NSC	S, B	-	-

54AC377	Octal D-Type W/Clock Enable	M38510/75603#*X	NSC	S, B	-	-
54AC574	Octal D-Type W/3-State Outputs	M38510/75604#*X	NSC	S, B	-	-

Parts

|

Packaging

|

Radiation

|

Publications

|

Calendar

|

Experts

Admin Login

|

Request Account

|

Feedback

|

Site Map

|

Help

|

Search

NEPP Program Manager:

Chuck Barnes, Jet Propulsion Laboratory

Responsible NASA Official:

Michael Sampson, NEPAG Manager

Website Comments:

Web Development Team

Last Modified:

August 8, 2001

AETD IT Security Banner

NASA Privacy Statement

Home

|

NASA Parts Selection List (NPLS)

|

Monolithic Microcircuits

|

Digital, Glue-Logic, ADVANCED CMOS

|

Advanced CMOS (AC), Digital

Gates

About NPSL

Prohibited Materials

Parts Selection Table of Contents

Capacitors

Circuit Protection Devices

Fuses

Connectors

Filters

Inductors

Microcircuits

NEW!

Monolithics

Hybrids

Resistors

Semiconductors

(Summary)

Diodes

Transistors

Thermistors

Wire and Cable

NASA Parts Selection List (NPSL)

Radiation Test:

GSFC SEU Radiation Data Bank

JPL's Radiation Data Bank

Manufacturer:

Active Supplier Assessment Program (ASAP) Core Suppliers List

Part Procurement:

Part Number/Procurement details

Application Notes:

Applicable details

Last Update:

March 1998

Advanced CMOS (AC), Digital

Gates

Generic or Manufacturer Part #	Description	Procurement Specification	Manufacturer	Device Class or Flow	Rad-Hard Level	Notes
54AC00	NAND, Quad 2-Input	M38510R75001#*X	NSC	S, B	100K	-
54AC02	NOR, Quad 2-Input	M38510R75101#*X	NSC	S, B	100K	-
54AC04	Hex Inverter	M38510R75701#*X	NSC	S, B	100K	-
54AC05	Hex Inv. W/ Open Drain Outputs	5962-9059001#*X	NSC	S, B	-	-
54AC08	AND, Quad 2-Input	M38510R75203#*X	NSC	S, B	100K	-
54AC10	NAND, Triple, 3-Input	M38510R75002#*X	NSC	S, B	100K	-
54AC11	AND, Triple, 3-Input	M38510/75204#*X	NSC	S, B	-	-
54AC14	HEX Invert Schmitt Trigger	M38510R75702#*X	NSC	S, B	-	-
54AC20	NAND, Dual 4-Input	M38510R75003#*X	NSC	S, B	100K	-
54AC32	OR, Quad 2-Input	M38510R75201#*X	NSC	S, B	100K	-
54AC86	XOR, Quad 2-Input	M38510R75202#*X	NSC	S, B	100K	-
54AC138	1-Of-8 Decoder/Demux	M38510/75802#*X	NSC	S, B	-	-
54AC139	Dual 1-Of-4 Decoder/Demux	M38510/75803#*X	NSC	S, B	-	-
54AC151	8-Input Multiplexer	M38510/76201#*X	NSC	S, B	-	-
54AC153	Dual 4-Input Multiplexer	M38510/76202#*X	NSC	S, B	-	-
54AC157	Quad 2-Input Multiplexer	M38510/76203#*X	NSC	S, B	-	-

Chuck Barnes, Jet Propulsion Laboratory

Responsible NASA Official:

Michael Sampson, NEPAG Manager

Website Comments:

Web Development Team

Last Modified:

August 8, 2001

AETD IT Security Banner

NASA Privacy Statement

Home

|

NASA Parts Selection List (NPLS)

|

Monolithic Microcircuits

|

Digital, Glue-Logic, ADVANCED CMOS

|

Advanced CMOS (AC), Digital

Shift Registers

About NPSL

Prohibited Materials

Parts Selection Table of Contents

Capacitors

Circuit Protection Devices

Fuses

Connectors

Filters

Inductors

Microcircuits

NEW!

Monolithics

Hybrids

Resistors

Semiconductors

(Summary)

Diodes

Transistors

Thermistors

Wire and Cable

NASA Parts Selection List (NPSL)

Radiation Test:

GSFC SEU Radiation Data Bank

JPL's Radiation Data Bank

Manufacturer:

Active Supplier Assessment Program (ASAP) Core Suppliers List

Part Procurement:

Part Number/Procurement details

Application Notes:

Applicable details

Last Update:

March 1998

Advanced CMOS (AC), Digital

Shift Registers

Generic or Manufacturer Part #	Description	Procurement Specification	Manufacturer	Device Class or Flow	Rad-Hard Level	Notes
54AC299	8-Bit Universal Shift Register	M38510R76506#*X	NSC	S, B	100K	-

Parts

|

Packaging

|

Radiation

|

Publications

|

Calendar

|

Experts

Admin Login

|

Request Account

|

Feedback

|

Site Map

|

Help

|

Search

NEPP Program Manager:

Chuck Barnes, Jet Propulsion Laboratory

Responsible NASA Official:

Michael Sampson, NEPAG Manager

Website Comments:

Web Development Team

Last Modified:

August 8, 2001

AETD IT Security Banner

NASA Privacy Statement

Home

|

NASA Parts Selection List (NPLS)

|

Monolithic Microcircuits

|

Digital, Glue-Logic, ADVANCED CMOS

|

Advanced CMOS, TTL Compatible (ACT), Digital

Buffers/Drivers

About NPSL

Prohibited Materials

Parts Selection Table of Contents

Capacitors

Circuit Protection Devices

Fuses

Connectors

Filters

Inductors

Microcircuits

NEW!

Monolithics

Hybrids

Resistors

Semiconductors

(Summary)

Diodes

Transistors

Thermistors

Wire and Cable

NASA Parts Selection List (NPSL)

Radiation Test:

GSFC SEU Radiation Data Bank

JPL's Radiation Data Bank

Manufacturer:

Active Supplier Assessment Program (ASAP) Core Suppliers List

Part Procurement:

Part Number/Procurement details

Application Notes:

Applicable details

Last Update:

March 1998

Advanced CMOS, TTL Compatible (ACT), Digital,

Buffers/Drivers

Generic or Manufacturer Part #	Description	Procurement Specification	Manufacturer	Device Class or Flow	Rad-Hard Level	Notes
54ACT240	Octal Buff/Line Driver W/3-State Outputs	5962-8775901#*X	NSC	S, B	-	-
54ACT240	Octal Buff/Line Driver W/3-State Outputs	5962R8775901#*X	NSC	S, B	100K	-
54ACT244	Octal Buff/Line Driver W/3 State Outputs	5962-8776001#*X	NSC	S, B	-	-
54ACT244	Octal Buff/Line Driver W/3-State Outputs	5962R8776001#*X	NSC	S, B	-	-
54ACT245	Octal Bi-Drectional Xceivers W/3-State I/O	5962-8766301#*X	NSC	S, B	-	-
54ACT245	Octal Bi-Directional Xceivers W/3-State I/O	5962R8766301#*X	NSC	S, B	-	-

Parts

|

Packaging

|

Radiation

|

Publications

|

Calendar

|

Experts

Admin Login

|

Request Account

|

Feedback
|
Site Map
|
Help
|
Search
NEPP Program Manager:
Chuck Barnes, Jet Propulsion Laboratory
Responsible NASA Official:
Michael Sampson, NEPAG Manager
Website Comments:
Web Development Team
Last Modified:
August 8, 2001
AETD IT Security Banner
NASA Privacy Statement

Home
|
NASA Parts Selection List (NPLS)
|
Monolithic Microcircuits
|
Digital, Glue-Logic, ADVANCED CMOS
|
Advanced CMOS, TTL Compatible (ACT), Digital Flip Flops
About NPSL
Prohibited Materials
Parts Selection Table of Contents
Capacitors
Circuit Protection Devices
Fuses
Connectors
Filters
Inductors
Microcircuits
NEW!
Monolithics
Hybrids

Resistors

Semiconductors

(Summary)

Diodes

Transistors

Thermistors

Wire and Cable

NASA Parts Selection List (NPSL)

Radiation Test:

GSFC SEU Radiation Data Bank

JPL's Radiation Data Bank

Manufacturer:

Active Supplier Assessment Program (ASAP) Core Suppliers List

Part Procurement:

Part Number/Procurement details

Application Notes:

Applicable details

Last Update:

March 1998

Advanced CMOS, TTL Compatible (ACT), Digital

Flip-Flops

Generic or Manufacturer Part #	Description	Procurement Specification	Manufacturer	Device Class or Flow	Rad-Hard Level	Notes
54ACT74	Dual D Positive Edge-Trigger Flip-Flop	5962-8752501#*X	NSC	S, B	-	-
54ACT112	Dual J-K Negative Edge-Trigger Flip-Flop	5962-8995001#*X	NSC	S, B	-	-
54ACT377	Octal D Flip-Flop W/ Clock Cable	5962-8769701#*X	NSC	S, B	-	-
54ACT574	Octal D Flip-Flop W/ 3-State Outputs	5962-8960101#*X	NSC	S, B	-	-

Parts

|

Packaging

|

Radiation

|

Publications

|

Calendar

|

Experts

Admin Login

|

Request Account

|

Feedback

|

Site Map

|

Help

|

Search

NEPP Program Manager:

Chuck Barnes, Jet Propulsion Laboratory

Responsible NASA Official:

Michael Sampson, NEPAG Manager

Website Comments:

Web Development Team

Last Modified:

August 8, 2001

AETD IT Security Banner

NASA Privacy Statement

Home

|

NASA Parts Selection List (NPLS)

|

Monolithic Microcircuits

|

Digital, Glue-Logic, ADVANCED CMOS

|

Advanced CMOS, TTL Compatible (ACT), Digital Gates

About NPSL

Prohibited Materials

Parts Selection Table of Contents

Capacitors

Circuit Protection Devices

Fuses

Connectors

Filters

Inductors

Microcircuits

NEW!

Monolithics

Hybrids

Resistors

Semiconductors

(Summary)

Diodes

Transistors

Thermistors

Wire and Cable

NASA Parts Selection List (NPSL)

Radiation Test:

GSFC SEU Radiation Data Bank

JPL's Radiation Data Bank

Manufacturer:

Active Supplier Assessment Program (ASAP) Core Suppliers List

Part Procurement:

Part Number/Procurement details

Application Notes:

Applicable details

Last Update:

March 1998

Advanced CMOS, TTL Compatible (ACT), Digital,

Gates

Generic or Manufacturer Part #	Description	Procurement Specification	Manufacturer	Device Class or Flow	Rad-Hard Level	Notes
54ACT00	NAND, Quad 2-Input	5962-8769901#*X	NSC	S, B	-	-
54ACT00	NAND, Quad 2-Input	5962R8769901#*X	NSC	S, B	100K	-
54ACT138	1-To-8 Line Decoder	5962-8755401#*X	NSC	S, B	-	-
54ACT151	8-Input Multiplexer	5962-8875601#*X	NSC	S, B	-	-

Parts

|

Packaging

|

Radiation

|

Publications

|

Calendar

|

Experts

Admin Login

|

Request Account

|

Feedback

|

Site Map

|

Help

|

Search

NEPP Program Manager:

Chuck Barnes, Jet Propulsion Laboratory

Responsible NASA Official:

Michael Sampson, NEPAG Manager

Website Comments:

Web Development Team

Last Modified:

August 8, 2001

AETD IT Security Banner

NASA Privacy Statement

Home

|

NASA Parts Selection List (NPLS)

|

Monolithic Microcircuits

|

Digital, Glue-Logic, ADVANCED CMOS

|

Advanced CMOS,Quiet Series (ACQ), Digital Buffers/Drivers

About NPSL

Prohibited Materials

Parts Selection Table of Contents

Capacitors

Circuit Protection Devices

Fuses

Connectors

Filters

Inductors

Microcircuits

NEW!

Monolithics

Hybrids

Resistors

Semiconductors

(Summary)

Diodes

Transistors

Thermistors

Wire and Cable

NASA Parts Selection List (NPSL)

Radiation Test:

GSFC SEU Radiation Data Bank

JPL's Radiation Data Bank

Manufacturer:

Active Supplier Assessment Program (ASAP) Core Suppliers List

Part Procurement:

Part Number/Procurement details

Application Notes:

Applicable details

Last Update:

March 1998

Advanced CMOS, Quiet Series (ACQ), Digital,

Buffers/Drivers

Generic or Manufacturer Part #	Description	Procurement Specification 5962-	Manufacturer	Device Class or Flow	Rad-Hard Level	Notes
54ACQ244DMQB	Buffer/Dri., Octal, Noninverting, With 3-State Outputs	9217601#*X	NSC	M		
54ACQ244FMQB	Buffer/Dri., Octal, Noninverting, With 3-State Outputs	9217601#*X	NSC	M		
54ACQ244LMQB	Buffer/Dri., Octal, Noninverting, With 3-State Outputs	9217601#*X	NSC	M		

Parts

|

Packaging

|

Radiation

|
Publications
|
Calendar
|
Experts
Admin Login
|
Request Account
|
Feedback
|
Site Map
|
Help
|
Search
NEPP Program Manager:
Chuck Barnes, Jet Propulsion Laboratory
Responsible NASA Official:
Michael Sampson, NEPAG Manager
Website Comments:
Web Development Team
Last Modified:
August 8, 2001
AETD IT Security Banner
NASA Privacy Statement

Home
|
NASA Parts Selection List (NPLS)
|
Monolithic Microcircuits
|
Digital, Glue-Logic, ADVANCED CMOS
|
Advanced CMOS,Quiet Series (ACQ), Digital Flip Flops
About NPSL
Prohibited Materials
Parts Selection Table of Contents

Capacitors

Circuit Protection Devices

Fuses

Connectors

Filters

Inductors

Microcircuits

NEW!

Monolithics

Hybrids

Resistors

Semiconductors

(Summary)

Diodes

Transistors

Thermistors

Wire and Cable

NASA Parts Selection List (NPSL)

Radiation Test:

GSFC SEU Radiation Data Bank

JPL's Radiation Data Bank

Manufacturer:

Active Supplier Assessment Program (ASAP) Core Suppliers List

Part Procurement:

Part Number/Procurement details

Application Notes:

Applicable details

Last Update:

March 1998

Advanced CMOS, Quiet Series (ACQ), Digital,

Flip-Flops

Generic or Manufacturer Part #	Description	Procurement Specification 5962-	Manufacturer	Device Class or Flow	Rad-Hard Level	Notes
54ACQ374DMQB	Flip-Flop, D-Type, With 3-State Outputs	9217901#*X	NSC	M		
54ACQ374FMQB	Flip-Flop, D-Type, With 3-State Outputs	9217901#*X	NSC	M		
54ACQ374LMQB	Flip-Flop, D-Type, With 3-State Outputs	9217901#*X	NSC	M		

Parts

|

Packaging

|
Radiation
|
Publications
|
Calendar
|
Experts
Admin Login
|
Request Account
|
Feedback
|
Site Map
|
Help
|
Search
NEPP Program Manager:
Chuck Barnes, Jet Propulsion Laboratory
Responsible NASA Official:
Michael Sampson, NEPAG Manager
Website Comments:
Web Development Team
Last Modified:
August 8, 2001
AETD IT Security Banner
NASA Privacy Statement

Home
|
NASA Parts Selection List (NPLS)
|
Monolithic Microcircuits
|
Digital, Glue-Logic, ADVANCED CMOS
|
Advanced CMOS,Quiet Series (ACQ), Digital Latches
About NPSL

Prohibited Materials

Parts Selection Table of Contents

Capacitors

Circuit Protection Devices

Fuses

Connectors

Filters

Inductors

Microcircuits

NEW!

Monolithics

Hybrids

Resistors

Semiconductors

(Summary)

Diodes

Transistors

Thermistors

Wire and Cable

NASA Parts Selection List (NPSL)

Radiation Test:

GSFC SEU Radiation Data Bank

JPL's Radiation Data Bank

Manufacturer:

Active Supplier Assessment Program (ASAP) Core Suppliers List

Part Procurement:

Part Number/Procurement details

Application Notes:

Applicable details

Last Update:

March 1998

Advanced CMOS, Quiet Series (ACQ), Digital,

Latches

Generic or Manufacturer Part #	Description	Procurement Specification 5962-	Manufacturer	Device Class or Flow	Rad-Hard Level	Notes
54ACQ373DMQB	Latch, D-Type, 8-Bit, With 3-State Outputs	9217801#*X	NSC	M		
54ACQ373FMQB	Latch, D-Type, 8-Bit, With 3-State Outputs	9217801#*X	NSC	M		
54ACQ373LMQB	Latch, D-Type, 8-Bit, With 3-State Outputs	9217801#*X	NSC	M		
54ACQ573DMQB	Latch, D-Type, 8-Bit, With 3-State Outputs	9218001#*X	NSC	M		
54ACQ573FMQB	Latch, D-Type, 8-Bit, With 3-State Outputs	9218001#*X	NSC	M		

54ACQ573LMQB	Latch, D-Type, 8-Bit, With 3-State Outputs	9218001#*X	NSC	M		

Parts

|

Packaging

|

Radiation

|

Publications

|

Calendar

|

Experts

Admin Login

|

Request Account

|

Feedback

|

Site Map

|

Help

|

Search

NEPP Program Manager:

Chuck Barnes, Jet Propulsion Laboratory

Responsible NASA Official:

Michael Sampson, NEPAG Manager

Website Comments:

Web Development Team

Last Modified:

August 8, 2001

AETD IT Security Banner

NASA Privacy Statement

Home

|

NASA Parts Selection List (NPLS)

|

Monolithic Microcircuits

|

Digital, Glue-Logic, ADVANCED CMOS

|

Advanced CMOS,TTL Compatible, Quiet Series (ACTQ), Digital Buffers/Drivers

About NPSL

Prohibited Materials

Parts Selection Table of Contents

Capacitors

Circuit Protection Devices

Fuses

Connectors

Filters

Inductors

Microcircuits

NEW!

Monolithics

Hybrids

Resistors

Semiconductors

(Summary)

Diodes

Transistors

Thermistors

Wire and Cable

NASA Parts Selection List (NPSL)

Radiation Test:

GSFC SEU Radiation Data Bank

JPL's Radiation Data Bank

Manufacturer:

Active Supplier Assessment Program (ASAP) Core Suppliers List

Part Procurement:

Part Number/Procurement details

Application Notes:

Applicable details

Last Update:

March 1998

Advanced CMOS, TTL Compatible, Quiet Series (ACTQ)

Digital, Buffers/Drivers

Generic or Manufacturer Part #	Description	Procurement Specification 5962-	Manufacturer	Device Class or Flow	Rad-Hard Level	Notes
54ACTQ16240W	Buffer/Driver, 16-Bit, With Inverting Three-State Outputs, Digital Adv Cmos	9688001#*X	NSC	Q		
54ACTQ16244FMQB	Buffer/Driver, 16-Bit, With 3-State Outputs, TTL-Comp. Inputs	9561901#*X	NSC	Q		
54ACTQ16244WQV	Buffer/Driver, 16-Bit, With 3-State Outputs, TTL-Comp. Inputs	9561901#*X	NSC	V		
54ACTQ240DMQB	Buffer/Line Driver, Octal, With Inverting 3-State Outputs, TTL-Compatible Inputs	9218401#*X	NSC	M		
54ACTQ240FMQB	Buffer/Line Driver, Octal, With Inverting 3-State Outputs, TTL-Compatible Inputs	9218401#*X	NSC	M		
54ACTQ240LMQB	Buffer/Line Driver, Octal, With Inverting 3-State Outputs, TTL-Compatible Inputs	9218401#*X	NSC	M		
54ACTQ241DMQB	Buffer/Driver, Octal, Noninverting, With 3-State Outputs, TTL-Compatible Inputs	9218501#*X	NSC	M		
54ACTQ241FMQB	Buffer/Driver, Octal, Noninverting, With 3-State Outputs, TTL-Compatible Inputs	9218501#*X	NSC	M		
54ACTQ241LMQB	Buffer/Driver, Octal, Noninverting, With 3-State Outputs, TTL-Compatible Inputs	9218501#*X	NSC	M		
54ACTQ244DMQB	Buffer/Line Driver, Octal, With Noninverting 3-State Outputs, TTL-Comp. Inputs	9218601#*X	NSC	M		
54ACTQ244EV	Buffer/Line Driver, Octal, With Noninverting 3-State Outputs, TTL-Comp. Inputs	9218601#*X	NSC	V		
54ACTQ244FMQB	Buffer/Line Driver, Octal, With Noninverting 3-State Outputs, TTL-Comp. Inputs	9218601#*X	NSC	M		
54ACTQ244J	Buffer/Line Driver, Octal, With Noninverting 3-State Outputs, TTL-Comp. Inputs	9218601#*X	NSC	V		
54ACTQ244LMQB	Buffer/Line Driver, Octal, With Noninverting 3-State Outputs, TTL-Comp. Inputs	9218601M#*X	NSC	M		
54ACTQ541DMQB	Buffer/Driver, Octal, Noninverting, With 3-State Outputs	9682901#*X	NSC	Q		
54ACTQ541FMQB	Buffer/Driver, Octal, Noninverting, With 3-State Outputs	9682901#*X	NSC	Q		
54ACTQ541LMQB	Buffer/Driver, Octal, Noninverting, With 3-State Outputs	9682901#*X	NSC	Q		
54ACTQ827FMQB	Bus Driver, 10-Bit, Noninverting 3-State Outputs, TTL-Compatible Inputs	9219901#*X	NSC	M		
54ACTQ827LMQB	Bus Driver, 10-Bit, Noninverting 3-State Outputs, TTL-Compatible Inputs	9219901#*X	NSC	M		
54ACTQ827SDMQB	Bus Driver, 10-Bit, Noninverting 3-State Outputs, TTL-Compatible Inputs	9219901#*X	NSC	M		
54ACTQ16245FMQB	Bus Transceiver, 16-Bit, With 3-State Outputs, TTL Compatible Inputs	9562001#*X	NSC	Q		
54ACTQ16245W-QV	Bus Transceiver, 16-Bit, With 3-State Outputs, TTL Compatible Inputs	9562001#*X	NSC	V		
54ACTQ244WV	Buffer/Line Driver, Octal, With Noninverting 3-State Outputs, TTL-Comp. Inputs	9218601#*X	NSC	V		
54ACTQ245DMQB	Bus Transceiver, 8-Bit, Bidirectional, With 3-State Inputs/Outputs	9218701#*X	NSC	M		
54ACTQ245FMQB	Bus Transceiver, 8-Bit, Bidirectional, With 3-State Inputs/Outputs	9218701#*X	NSC	M		
54ACTQ646FMQB	Transceiver/Register, 8-Bit, With 3-State Outputs	9219601#*X	NSC	M		
54ACTQ646LMQB	Transceiver/Register, 8-Bit, With 3-State Outputs	9219601#*X	NSC	M		

Request Account

|

Feedback

|

Site Map

|

Help

|

Search

NEPP Program Manager:

Chuck Barnes, Jet Propulsion Laboratory

Responsible NASA Official:

Michael Sampson, NEPAG Manager

Website Comments:

Web Development Team

Last Modified:

August 8, 2001

AETD IT Security Banner

NASA Privacy Statement

Home

|

NASA Parts Selection List (NPLS)

|

Monolithic Microcircuits

|

Digital, Glue-Logic, ADVANCED CMOS

|

Advanced CMOS,TTL Compatible, Quiet Series (ACTQ), Digital Flip Flops

About NPSL

Prohibited Materials

Parts Selection Table of Contents

Capacitors

Circuit Protection Devices

Fuses

Connectors

Filters

Inductors

Microcircuits

NEW!

Monolithics

Hybrids

Resistors

Semiconductors

(Summary)

Diodes

Transistors

Thermistors

Wire and Cable

NASA Parts Selection List (NPSL)

Radiation Test:

GSFC SEU Radiation Data Bank

JPL's Radiation Data Bank

Manufacturer:

Active Supplier Assessment Program (ASAP) Core Suppliers List

Part Procurement:

Part Number/Procurement details

Application Notes:

Applicable details

Last Update:

March 1998

Advanced CMOS, TTL Compatible, Quiet Series (ACTQ)

Digital, Flip-Flops

Generic or Manufacturer Part #	Description	Procurement Specification	Manufacturer	Device Class or Flow	Rad-Hard Level	Notes
54ACTQ16374FMQB	Flip-Flop, D-Type, 16-Bit	5962-9452801Q#*X	NSC	Q		
54ACTQ16374WQV	Flip-Flop, D-Type, 16-Bit	5962-9452801V#*X	NSC	V		
54ACTQ273DMQB	Flip-Flop, D-Type, 4-Bit, With Reset, TTL-Compatible Inputs	5962-8973501RA	NSC	-		
54ACTQ273EV	Flip-Flop, D-Type, 4-Bit, With Reset, TTL-Compatible Inputs	5962-8973501V#*X	NSC	V		
54ACTQ273FMQB	Flip-Flop, D-Type, 4-Bit, With Reset, TTL-Compatible Inputs	5962-8973501SA	NSC	-		
54ACTQ273JV	Flip-Flop, D-Type, 4-Bit, With Reset, TTL-Compatible Inputs	5962-8973501#*X	NSC	V		
54ACTQ273LMQB	Flip-Flop, D-Type, 4-Bit, With Reset, TTL-Compatible Inputs	5962-89735012A	NSC			
54ACTQ273WV	Flip-Flop, D-Type, 4-Bit, With Reset, TTL-Compatible Inputs	5962-8973501#*X	NSC	V		
54ACTQ374DMQB	Flip-Flop, D-Type, 8-Bit, With 3-State Outputs, TTL-Compatible Inputs	5962-9218901#*X	NSC	M		
54ACTQ374FMQB	Flip-Flop, D-Type, 8-Bit, With 3-State Outputs, TTL-Compatible Inputs	5962-9218901#*X	NSC	M		
54ACTQ374LMQB	Flip-Flop, D-Type, 8-Bit, With 3-State Outputs, TTL-Compatible Inputs	5962-9218901#*X	NSC	M		
54ACTQ377DMQB	Flip-Flop, D-Type, 8-Bit, W/Clock Enable, TTL-Compatible Inputs	5962-9219001#*X	NSC	M		
54ACTQ377FMQB	Flip-Flop, D-Type, 8-Bit, W/Clock Enable, TTL-Compatible Inputs	5962-9219001M#*X	NSC	M		
54ACTQ377LMQB	Flip-Flop, D-Type, 8-Bit, W/Clock Enable, TTL-Compatible Inputs	5962-9219001M#*X	NSC	M		

Parts

|
Packaging
|
Radiation
|
Publications
|
Calendar
|
Experts
Admin Login
|
Request Account
|
Feedback
|
Site Map
|
Help
|
Search
NEPP Program Manager:
Chuck Barnes, Jet Propulsion Laboratory
Responsible NASA Official:
Michael Sampson, NEPAG Manager
Website Comments:
Web Development Team
Last Modified:
August 8, 2001
AETD IT Security Banner
NASA Privacy Statement

Home
|
NASA Parts Selection List (NPLS)
|
Monolithic Microcircuits
|
Digital, Glue-Logic, ADVANCED CMOS
|

Advanced CMOS,TTL Compatible, Quiet Series (ACTQ), Digital Gates

About NPSL

Prohibited Materials

Parts Selection Table of Contents

Capacitors

Circuit Protection Devices

Fuses

Connectors

Filters

Inductors

Microcircuits

NEW!

Monolithics

Hybrids

Resistors

Semiconductors

(Summary)

Diodes

Transistors

Thermistors

Wire and Cable

NASA Parts Selection List (NPSL)

Radiation Test:

GSFC SEU Radiation Data Bank

JPL's Radiation Data Bank

Manufacturer:

Active Supplier Assessment Program (ASAP) Core Suppliers List

Part Procurement:

Part Number/Procurement details

Application Notes:

Applicable details

Last Update:

March 1998

Advanced CMOS, TTL Compatible, Quiet Series (ACTQ)

Digital, Gates

Generic or Manufacturer Part #	Description	Procurement Specification 5962-	Manufacturer	Device Class or Flow	Rad-Hard Level	Notes
54ACTQ04DMQB	Hex Inverter, TTL-Compatible Inputs	8973401CA	NSC	-		
54ACTQ04FMQB	Hex Inverter, TTL-Compatible Inputs	8973401DA	NSC	-		
54ACTQ04LMQB	Hex Inverter, TTL-Compatible Inputs	89734012A	NSC	-		

54ACTQ14DMQB	Hex Inverter, TTL-Compatible, Schmitt Trigger Inputs	9218301MCA#*X	NSC	M		
54ACTQ14FMQB	Hex Inverter, TTL-Compatible, Schmitt Trigger Inputs	9218301#*X	NSC	M		
54ACTQ14LMQB	Hex Inverter, TTL-Compatible, Schmitt Trigger Inputs	9218301M2A	NSC	M		
54ACTQ02DMQB	Nor Gate, Quad 2-Input, TTL-Compatible Inputs	9218101#*X	NSC	M		
54ACTQ02FMQB	Nor Gate, Quad 2-Input, TTL-Compatible Inputs	9218101#*X	NSC	M		
54ACTQ02LMQB	Nor Gate, Quad 2-Input, TTL-Compatible Inputs	9218101#*X	NSC	M		
54ACTQ08DMQB	And Gate, Quad 2-Input, With TTL-Compatible Inputs	8954702CA	NSC	-		
54ACTQ08FMQB	And Gate, Quad 2-Input, With TTL-Compatible Inputs	8954702DA	NSC	-		
54ACTQ08LMQB	And Gate, Quad 2-Input, With TTL-Compatible Inputs	89547022A	NSC	-		
54ACTQ10DMQB	Nand Gate, Triple 3-Input, TTL-Compatible Inputs	9218201#*X	NSC	M		
54ACTQ10FMQB	Nand Gate, Triple 3-Input, TTL-Compatible Inputs	9218201#*X	NSC	M		
54ACTQ10LMQB	Nand Gate, Triple 3-Input, TTL-Compatible Inputs	9218201#*X	NSC	M		
54ACTQ32DMQB	Or Gate, Quad 2-Input, With TTL-Compatible Inputs	8973601CA	NSC	-		
54ACTQ32FMQB	Or Gate, Quad 2-Input, With TTL-Compatible Inputs	8973601DA	NSC	-		
54ACTQ32LMQB	Or Gate, Quad 2-Input, With TTL-Compatible Inputs	89736012A	NSC	-		

NEPP Program Manager:
Chuck Barnes, Jet Propulsion Laboratory
Responsible NASA Official:
Michael Sampson, NEPAG Manager

Website Comments:

Web Development Team

Last Modified:

August 8, 2001

AETD IT Security Banner

NASA Privacy Statement

Home

|

NASA Parts Selection List (NPLS)

|

Monolithic Microcircuits

|

Digital, Glue-Logic, ADVANCED CMOS

|

Advanced CMOS,TTL Compatible, Quiet Series (ACTQ), Digital Latches

About NPSL

Prohibited Materials

Parts Selection Table of Contents

Capacitors

Circuit Protection Devices

Fuses

Connectors

Filters

Inductors

Microcircuits

NEW!

Monolithics

Hybrids

Resistors

Semiconductors

(Summary)

Diodes

Transistors

Thermistors

Wire and Cable

NASA Parts Selection List (NPSL)

Radiation Test:

GSFC SEU Radiation Data Bank

JPL's Radiation Data Bank

Manufacturer:

Active Supplier Assessment Program (ASAP) Core Suppliers List

Part Procurement:

Part Number/Procurement details

Application Notes:

Applicable details

Last Update:

March 1998

Advanced CMOS, TTL Compatible, Quiet Series (ACTQ)

Digital, Latches

Generic or Manufacturer Part #	Description	Procurement Specification 5962-	Manufacturer	Device Class or Flow	Rad-Hard Level	Notes
54ACTQ16373FMQB	Latch, D-Type, 16-Bit, Transparent, With 3-State Outputs, TTL-Compatible Inputs	9561801#*X	NSC	Q		
54ACTQ373DMQB	Latch, D-Type, 8-Bit, With 3-State Outputs, TTL-Compatible Inputs	9218801#*X	NSC	M		
54ACTQ373FMQB	Latch, D-Type, 8-Bit, With 3-State Outputs, TTL-Compatible Inputs	9218801#*X	NSC	M		
54ACTQ373LMQB	Latch, D-Type, 8-Bit, With 3-State Outputs, TTL-Compatible Inputs	9218801#*X	NSC	M		
54ACTQ573DMQB	Latch, 8-Bit, Transparent, With 3-State Outputs, TTL-Compatible Inputs	9219401#*X	NSC	M		
54ACTQ573FMQB	Latch, 8-Bit, Transparent, With 3-State Outputs, TTL-Compatible Inputs	9219401#*X	NSC	M		
54ACTQ573LMQB	Latch, 8-Bit, Transparent, With 3-State Outputs, TTL-Compatible Inputs	9219401#*X	NSC	M		
54ACTQ841FMQB	Latch, 10-Bit, With 3-State Outputs, TTL-Compatible Inputs	9220001#*X	NSC	M		
54ACTQ841LMQB	Latch, 10-Bit, With 3-State Outputs, TTL-Compatible Inputs	9220001#*X	NSC	M		
54ACTQ841SDMQB	Latch, 10-Bit, With 3-State Outputs, TTL-Compatible Inputs	9220001#*X	NSC	M		

Parts

|

Packaging

|

Radiation

|

Publications

|

Calendar

|

Experts

Admin Login

|

Request Account

|

Feedback

|

Site Map

|

Help

|

Search

NEPP Program Manager:

Chuck Barnes, Jet Propulsion Laboratory

Responsible NASA Official:

Michael Sampson, NEPAG Manager

Website Comments:

Web Development Team

Last Modified:

September 11, 2001

AETD IT Security Banner

NASA Privacy Statement

Home

|

NASA Parts Selection List (NPSL)

|

Monolithic Microcircuits

| Digital, Glue-Logic, BIPOLAR -- LS, ALS, ABT

About NPSL

Prohibited Materials

Parts Selection Table of Contents

Capacitors

Circuit Protection Devices

Fuses

Connectors

Filters

Inductors

Microcircuits

NEW!

Monolithics

Hybrids

Resistors

Semiconductors

(Summary)

Diodes

Transistors

Thermistors

Wire and Cable

NASA Parts Selection List (NPSL)

MICROCIRCUITS

(Monolithic)

DIGITAL, GLUE-LOGIC, BIPOLAR

TYPE	TECHNOLOGY	TECHNOLOGY	TECHNOLOGY
	Schottky, Low Power, 54LS	Schottky, Advanced Low Power, 54ALS	Advanced BiCMOS, 54ABT
Buffers/Drivers	X	X	X
Counters	X	X	
Flip-Flops	X	X	
Gates	X	X	
Latches	X		
Shift Registers	X		

Parts

|

Packaging

|

Radiation

|

Publications

|

Calendar

|

Experts

Admin Login

|

Request Account

|

Feedback

|

Site Map

|

Help

|

Search

NEPP Program Manager:

Chuck Barnes, Jet Propulsion Laboratory

Responsible NASA Official:

Michael Sampson, NEPAG Manager

Website Comments:

Web Development Team

Last Modified:

August 8, 2001

AETD IT Security Banner

NASA Privacy Statement

Home

|

NASA Parts Selection List (NPSL)

|

Monolithic Microcircuits

|

Digital, Glue-Logic, BIPOLAR -- LS, ALS, ABT

|

Schottky,

Low Power,

54LS - Buf

fers/Drivers

About NPSL

Prohibited Materials

Parts Selection Table of Contents

Capacitors

Circuit Protection Devices

Fuses

Connectors

Filters

Inductors

Microcircuits

NEW!

Monolithics

Hybrids

Resistors

Semiconductors

(Summary)

Diodes

Transistors

Thermistors

Wire and Cable

NASA Parts Selection List (NPSL)

Radiation Test:

GSFC SEU Radiation Data Bank

JPL's Radiation Data Bank

Manufacturer:

Active Supplier Assessment Program (ASAP) Core Suppliers List

Part Procurement:

Part Number/Procurement details

Application Notes:

Applicable details

Last Update:

March 1998

Schottky, Low Power (LS)

Buffers/Drivers

Generic or Manufacturer Part #	Description	Procurement Specification MIL-M-38510	Manufacturer	Device Class or Flow	Rad-Hard Level	Notes
54LS38	Quad, 2-Input Nand, Open-Col.	/30203#*X	T.I	B	-	-
54LS125A	Quad, Noninv 3-State	/32301#*X	T.I	B	-	-
54LS126	Quad, Noninv 3-State	/32302#*X	T.I	B	-	-
54LS240	Octal, Inverter, 3-State	/32401#*X	NSC, T.I	B	-	-
54LS241	Octal, Noninv, 3-State Outputs	/32402#*X	T.I	B	-	-
54LS244	Octal, Noninv, 3-State Outputs	/32403#*X	NSC, T.I	B	-	-
54LS245	Octal, Bus Transceiver, 3-State	/32803#*X	NSC, T.I	B	-	-
54LS365	Hex, Common Enable, 3-State	/32201#*X	NSC, T.I	B	-	-
54LS366	Hex, Inv, Common Enable, 3-State	/32202#*X	T.I	B	-	-
54LS367	Hex, 4-Bit/2-Bit, Noninv, 3-State	/32203#*X	NSC, T.I	B	-	-
54LS368	Hex, 4-Bit/2-Bit, Inverting, 3-State	/32204#*X	NSC, T.I	B	-	-
54LS541	Octal, Noninverting, 3-State Outputs	/32405#*X	T.I	B	-	-

Parts

|

Packaging

|

Radiation

|

Publications

|

Calendar

|

Experts

Admin Login
|
Request Account
|
Feedback
|
Site Map
|
Help
|
Search
NEPP Program Manager:
Chuck Barnes, Jet Propulsion Laboratory
Responsible NASA Official:
Michael Sampson, NEPAG Manager
Website Comments:
Web Development Team
Last Modified:
August 8, 2001
AETD IT Security Banner
NASA Privacy Statement

Home
|
NASA Parts Selection List (NPSL)
|
Monolithic Microcircuits
|
Digital, Glue-Logic, BIPOLAR -- LS, ALS, ABT
|
Schottky,
Low Power,
54LS -
Counters
About NPSL
Prohibited Materials
Parts Selection Table of Contents
Capacitors
Circuit Protection Devices
Fuses

Connectors

Filters

Inductors

Microcircuits

NEW!

Monolithics

Hybrids

Resistors

Semiconductors

(Summary)

Diodes

Transistors

Thermistors

Wire and Cable

NASA Parts Selection List (NPSL)

Radiation Test:	JPL's Radiation Data Bank
Radiation Test:	GSFC SEU Radiation Data Bank
Manufacturer:	Active Supplier Assessment Program (ASAP) Core Suppliers List
Part Procurement:	Part Number/Procurement details
Application Notes:	Applicable details
Last Update:	March 1998

Schottky, Low Power (LS)

Counters

Generic or Manufacturer Part #	Description	Procurement Specification MIL-M-38510	Manufacturer	Device Class or Flow	Rad-Hard Level	Notes
54LS90	4-Bit Decade	/31501#*X	T.I.	B	-	-
54LS92	Divide-By-12	/31510#*X	T.I.	B	-	-
54LS93	4-Bit Decade	/31502#*X	T.I.	B	-	-
54LS160A	4-Bit Sync Decade	/31503#*X	T.I.	B	-	-
54LS161	4-Bit Sync Binary, Async Reset	/31504#*X	NSC, T.I.	B	-	-
54LS163A	4-Bit Sync Binary, Sync Reset	/31512#*X	T.I.	B	-	-
54LS191	4-Bit Sync Bin Up/Down	/31509#*X	T.I.	B	-	-
54LS193	4-Bit Sync Bin Up/Down	/31508#*X	NSC, T.I.	B	-	-
54LS197	Preset 50/30 Mhz Binary	/32002#*X	T.I.	B	-	-
54LS390	Dual 4-Bit A&B I/P Decade	/32701#*X	T.I.	B	-	-
54LS393	Dual 4-Bit Binary	/32702#*X	T.I.	B	-	-

Parts

|

Packaging
|
Radiation
|
Publications
|
Calendar
|
Experts
Admin Login
|
Request Account
|
Feedback
|
Site Map
|
Help
|
Search
NEPP Program Manager:
Chuck Barnes, Jet Propulsion Laboratory
Responsible NASA Official:
Michael Sampson, NEPAG Manager
Website Comments:
Web Development Team
Last Modified:

August 8, 2001
AETD IT Security Banner
NASA Privacy Statement

Home
|
NASA Parts Selection List (NPSL)
|
Monolithic Microcircuits
|
Digital, Glue-Logic, BIPOLAR -- LS, ALS, ABT
|
Schottky,

NASA Parts Selection List (NPSL)

Radiation Test:	GSFC SEU Radiation Data Bank
Radiation Test:	JPL's Radiation Data Bank
Manufacturer:	Active Supplier Assessment Program (ASAP) Core Suppliers List
Part Procurement:	Part Number/Procurement details
Application Notes:	Applicable details
Last Update:	March 1998

Schottky, Low Power (LS)
Flip Flop

Generic or Manufacturer Part #	Description	Procurement Specification MIL-M-38510	Manufacturer	Device Class or Flow	Rad-Hard Level	Notes
54LS74A	D-Type, Dual	/30102#*X	NSC, T.I.	S, B	-	-
54LS76A	JK, Dual, Negative Edg-Trig	/30110#*X	T.I.	B	-	-
54LS109	JK, Dual With Reset/Clear,Pos.	/30109#*X	NSC. T.I.	B	-	-
54LS112	JK, Dual With Reset/Clear, Neg.	/30103#*X	T.I.	B	-	-

54LS113	JK, Dual With Reset/Clear	/30104#*X	T.I.	B	-	-
54LS123	Monostable, Dual, Retrig.	/31401#*X	T.I.	B	-	-
54LS173A	D-Type, Quad	/36101#*X	T.I.	B	-	-
54LS174	D-Type, Hex	/30106#*X	T.I.	B	-	-
54LS175	D-Type, Quad	/30107#*X	NSC, T.I.	B	-	-
54LS221	Monostable, Dual, Retrig.	/31402#*X	T.I.	B	-	-
54LS273	D-Type, Octal With Clear	/32501#*X	NSC, T.I.	B	-	-
54LS374	D-Type, Octal, 3-State Outputs	/32503#*X	T.I.	B	-	-

NASA Parts Selection List (NPSL)

Radiation Test:	GSFC SEU Radiation Data Bank
Radiation Test:	JPL's Radiation Data Bank
Manufacturer:	Active Supplier Assessment Program (ASAP) Core Suppliers List
Part Procurement:	Part Number/Procurement details
Application Notes:	Applicable details

Last Update:	March 1998

Schottky, Low Power (LS)

Gates

Generic or Manufacturer Part #	Description	Procurement Specification MIL-M-38510	Manufacturer	Device Class or Flow	Rad-Hard Level	Notes
54LS00	Quad 2-Input, Nand	/30001#*X	NSC, T.I.	B	-	-
54LS02	Quad 2-Input Nor	/30301#*X	NSC, T.I.	B	-	-
54LS03	Quad 2-In, Nand, Open Collector	/30002#*X	NSC	S, B	-	-
54LS04	Hex Inverter	/30003#*X	NSC, T.I.	S, B	-	-
54LS05	Hex Inverter Open-Collector O/P	/30004#*X	NSC	B	-	-
54LS08	Quad 2-Input And	/31004#*X	NSC, T.I.	B	-	-
54LS09	2-Input, Open Collector And	/31005#*X	T.I.	B	-	-
54LS10	Triple 3-Input Nand	/30005#*X	NSC, T.I.	S, B	-	-
54LS11	Triple 3-Input And	/31001#*X	NSC, T.I.	B	-	-
54LS20	Dual 4-Input Nand	/30007#*X	NSC, T.I.	S, B	-	-
54LS21	Dual 4-Input And	/31003#*X	NSC, T.I.	B	-	-
54LS26	2-Input Open Collector. Nand	/32102#*X	T.I.	B	-	-
54LS27	Triple 3-Input Nor	/30302#*X	NSC, T.I.	S, B	-	-
54LS32	Quad 2-Input Or	/30501#*X	NSC, T.I.	B	-	-
54LS42	Bcd-To-7-Segment Decoder	/30703#*X	NSC, T.I.	S, B	-	-
54LS51	Dual 2-Wide And-Or-Inverter	/30401#*X	T.I.	B	-	-
54LS83A	4-Bit Full Adder, Fast Carry	/31201#*X	T.I.	B	-	-
54LS85	4-Bit Magnitude Comparator	/31101#*X	NSC, T.I.	B	-	-
54LS86	Quad 2-Input X-Or	/30502#*X	NSC, T.I.	B	-	-
54LS138	3-Line-To-8-Line Decoder	/30701#*X	NSC, T.I.	B	-	-
54LS139	Dual 2-Line-To-4-Line Decoder	/30702#*X	NSC, T.I.	S, B	-	-
54LS148	8-Line-To-3-Line Priority Encoder	/36001#*X	T.I.	B	-	-
54LS151	8-In Put Data Select/Mux	/30901#*X	NSC, T.I.	B	-	-
54LS153	Dual 4-Input Data Select/Mux	/30902#*X	NSC, T.I.	S, B	-	-
54LS157	Quad 2-Input Data Select/Mux	/30903#*X	NSC, T.I.	S, B	-	-
54LS158	Quad 2-Input Inv. Outputs Mux	/30904#*X	NSC, T.I.	S, B	-	-
54LS251	8-Bit 3-State, Data Select/Mux	/30905#*X	NSC, T.I.	S, B	-	-
54LS253	4-Input 3- State Data Select/Mux	/30908#*X	T.I.	B	-	-
54LS257B	2-Input 3- State Data Select/Mux	/30906#*X	NSC, T.I.	B	-	-
54LS258B	2-Input 3- State Data Select/Mux	/30907#*X	T.I.	B	-	-
54LS280	9-Bit Parity Generator/Checker	/32901#*X	T.I.	B	-	-
54LS283	4-Bit Full Adder , Fast Carry	/31202#*X	NSC, T.I.	B	-	-
54LS348	8-To-3-Line Priority Encoder	/36002#*X	T.I.	B	-	-

Parts

|

Packaging

|
Radiation
|
Publications
|
Calendar
|
Experts
Admin Login
|
Request Account
|
Feedback
|
Site Map
|
Help
|
Search
NEPP Program Manager:
Chuck Barnes, Jet Propulsion Laboratory
Responsible NASA Official:
Michael Sampson, NEPAG Manager
Website Comments:
Web Development Team
Last Modified:
August 8, 2001
AETD IT Security Banner
NASA Privacy Statement

Home
|
NASA Parts Selection List (NPSL)
|
Monolithic Microcircuits
|
Digital, Glue-Logic, BIPOLAR -- LS, ALS, ABT
|
Schottky,
Low Power,

NASA Parts Selection List (NPSL)

Radiation Test:	GSFC SEU Radiation Data Bank JPL's Radiation Data Bank
Manufacturer:	Active Supplier Assessment Program (ASAP) Core Suppliers List
Part Procurement:	Part Number/Procurement details
Application Notes:	Applicable details
Last Update:	March 1998

Schottky, Low Power (LS)

Latches

Generic or Manufacturer Part #	Description	Procurement Specification MIL-M-38510	Manufacturer	Device Class or Flow	Rad-Hard Level	Notes
54LS75	D-Type, 4-Bit Bistable	/31601#*X	T.I.	B	-	-
54LS259	D-Type, Octal, Addressable	/31603#*X	T.I.	B	-	-
54LS279	RS, Quad	/31602#*X	NSC	B	-	-
54LS373	D-Type, Octal, Transparent	/32502#*X	T.I.	B	-	-
54LS377	D-Type, Octal	/32504#*X	T.I.	B	-	-

Parts
|
Packaging
|
Radiation
|
Publications
|
Calendar
|
Experts
Admin Login
|
Request Account
|
Feedback
|
Site Map
|
Help
|
Search
NEPP Program Manager:
Chuck Barnes, Jet Propulsion Laboratory
Responsible NASA Official:
Michael Sampson, NEPAG Manager
Website Comments:
Web Development Team
Last Modified:

August 8, 2001
AETD IT Security Banner
NASA Privacy Statement

Home
|
NASA Parts Selection List (NPSL)
|
Monolithic Microcircuits
|
Digital, Glue-Logic, BIPOLAR -- LS, ALS, ABT

NASA Parts Selection List (NPSL)

Radiation Test:	GSFC SEU Radiation Data Bank JPL's Radiation Data Bank
Manufacturer:	Active Supplier Assessment Program (ASAP) Core Suppliers List
Part Procurement:	Part Number/Procurement details
Application Notes:	Applicable details
Last Update:	March 1998

Schottky, Low Power (LS)

Shift Register

Generic or Manufacturer Part #	Description	Procurement Specification MIL-M-38510	Manufacturer	Device Class or Flow	Rad-Hard Level	Notes
54LS96	5-Bit Shift Register	/30604#*X	T.I.	B	-	-
54LS164	8-Bit Parallel-Out, Serial-In	/30605#*X	NSC, T.I.	B	-	-
54LS165A	8-Bit Parallel-In, Serial-Out	/30608#*X	T.I.	B	-	-

54LS166	8-Bit Parallel-In, Serial-Out	/30609#*X	T.I.	B	-	-
54LS194A	4-Bit Bidirectional	/30601#*X	T.I.	B	-	-
54LS195A	4-Bit Parallel Access	/30602#*X	T.I.	B	-	-
54LS295B	4-Bit Bidirectional	/30606#*X	SAR	B	-	-
54LS395A	4-Bit Universal	/30607#*X	T.I.	B	-	-
54LS670	4 X 4, 3-State Outputs Register File	/31901#*X	NSC	B	-	-

Parts
|
Packaging
|
Radiation
|
Publications
|
Calendar
|
Experts
Admin Login
|
Request Account
|
Feedback
|
Site Map
|
Help
|
Search
NEPP Program Manager:
Chuck Barnes, Jet Propulsion Laboratory
Responsible NASA Official:
Michael Sampson, NEPAG Manager
Website Comments:
Web Development Team
Last Modified:
August 8, 2001
AETD IT Security Banner
NASA Privacy Statement

Home

|

NASA Parts Selection List (NPSL)

|

Monolithic Microcircuits

|

Digital, Glue-Logic, BIPOLAR -- LS, ALS, ABT

|

Schottky, Advanced Low Power (ALS) Buffers/Drivers

About NPSL

Prohibited Materials

Parts Selection Table of Contents

Capacitors

Circuit Protection Devices

Fuses

Connectors

Filters

Inductors

Microcircuits

NEW!

Monolithics

Hybrids

Resistors

Semiconductors

(Summary)

Diodes

Transistors

Thermistors

Wire and Cable

NASA Parts Selection List (NPSL)

Radiation Test:

GSFC SEU Radiation Data Bank

JPL's Radiation Data Bank

Manufacturer:

Active Supplier Assessment Program (ASAP) Core Suppliers List

Part Procurement:

Part Number/Procurement details

Application Notes:

Applicable details

Last Update:

March 1998

Schottky, Advanced Low Power (ALS)

Buffers/Drivers

Generic or Manufacturer Part #	Description	Procurement Specification MIL-M-38510	Manufacturer	Device Class or Flow	Rad-Hard Level	Notes
54ALS240A	Octal, Buffer, Inv, 3-State Output	/38301#*X	T.I.	B	-	-
54ALS241	Octal, Buffer, Noninv, 3-State Output	/38302#*X	T.I.	B	-	-
54ALS244B	Octal, Buffer, Noninv, 3-State Output	/38303#*X	T.I.	B	-	-
54ALS1034	Hex , Noninv Buffer/Driver	/38411#*X	T.I.	B	-	-

Parts

|

Packaging

|

Radiation

|

Publications

|

Calendar

|

Experts

Admin Login

|

Request Account

|

Feedback

|

Site Map

|

Help

|

Search

NEPP Program Manager:

Chuck Barnes, Jet Propulsion Laboratory

Responsible NASA Official:

Michael Sampson, NEPAG Manager

Website Comments:

Web Development Team

Last Modified:

August 8, 2001

AETD IT Security Banner

NASA Privacy Statement

Home

|

NASA Parts Selection List (NPSL)

|

Monolithic Microcircuits

|

Digital, Glue-Logic, BIPOLAR -- LS, ALS, ABT

|

Schottky, Advanced Low Power (ALS) Counters

About NPSL

Prohibited Materials

Parts Selection Table of Contents

Capacitors

Circuit Protection Devices

Fuses

Connectors

Filters

Inductors

Microcircuits

NEW!

Monolithics

Hybrids

Resistors

Semiconductors

(Summary)

Diodes

Transistors

Thermistors

Wire and Cable

NASA Parts Selection List (NPSL)

Radiation Test:

GSFC SEU Radiation Data Bank

JPL's Radiation Data Bank

Manufacturer:

Active Supplier Assessment Program (ASAP) Core Suppliers List

Part Procurement:

Part Number/Procurement details

Application Notes:

Applicable details

Last Update:

March 1998

Schottky, Advanced Low Power (ALS)

Counters

Generic or Manufacturer Part #	Description	Procurement Specification MIL-M-38510	Manufacturer	Device Class or Flow	Rad-Hard Level	Notes
54ALS161B	4-Bit Sync, Binary	/38001#*X	T.I.	B	-	-
54ALS163B	4-Bit Sync, Clear Binary	/38002#*X	T.I.	B	-	-
54ALS169B	4-Bit Sync, Up/Down Binary	/38003#*X	T.I.	B	-	-

Parts

|

Packaging

|

Radiation

|

Publications

|

Calendar

|

Experts

Admin Login

|

Request Account

|

Feedback

|

Site Map

|

Help

|

Search

NEPP Program Manager:

Chuck Barnes, Jet Propulsion Laboratory

Responsible NASA Official:

Michael Sampson, NEPAG Manager

Website Comments:

Web Development Team

Last Modified:

August 8, 2001

AETD IT Security Banner

NASA Privacy Statement

Home

|

NASA Parts Selection List (NPSL)

|

Monolithic Microcircuits

|

Digital, Glue-Logic, BIPOLAR -- LS, ALS, ABT

|

Schottky, Advanced Low Power (ALS) Flip Flops

About NPSL

Prohibited Materials

Parts Selection Table of Contents

Capacitors

Circuit Protection Devices

Fuses

Connectors

Filters

Inductors

Microcircuits

NEW!

Monolithics

Hybrids

Resistors

Semiconductors

(Summary)

Diodes

Transistors

Thermistors

Wire and Cable

NASA Parts Selection List (NPSL)

Radiation Test:

GSFC SEU Radiation Data Bank

JPL's Radiation Data Bank

Manufacturer:

Active Supplier Assessment Program (ASAP) Core Suppliers List

Part Procurement:

Part Number/Procurement details

Application Notes:

Applicable details

Last Update:

March 1998

Schottky, Advanced Low Power (ALS)

Flip-Flops

Generic or Manufacturer Part #	Description	Procurement Specification MIL-M-38510	Manufacturer	Device Class or Flow	Rad-Hard Level	Notes
54ALS74A	D-Type, Dual-Positive Trigger	/37101#*X	T.I.	B	-	-
54ALS109A	JK, Dual, Preset, Active High	/37102#*X	T.I.	B	-	-
54ALS112A	JK, Dual, Preset, Active Low	/37103#*X	T.I.	B	-	-
54ALS174	D-Type, Hex, With Clear	/37201#*X	T.I.	B	-	-
54ALS175	D-Type, Quad, With Clear	/37202#*X	T.I.	B	-	-
54ALS373	D-Type, Octal, 3-State Outputs	/37203#*X	T.I.	B	-	-
54ALS374	D-Type, Octal, Edge-Trigger	/37204#*X	T.I.	B	-	-
54ALS573	D-Type,Octal, 3-State Outputs	/38201#*X	T.I.	B	-	-
54ALS574A	D-Type, Octal	/37104#*X	T.I.	B	-	-

|

Help

|

Search

NEPP Program Manager:

Chuck Barnes, Jet Propulsion Laboratory

Responsible NASA Official:

Michael Sampson, NEPAG Manager

Website Comments:

Web Development Team

Last Modified:

August 8, 2001

AETD IT Security Banner

NASA Privacy Statement

Home

|

NASA Parts Selection List (NPSL)

|

Monolithic Microcircuits

|

Digital, Glue-Logic, BIPOLAR -- LS, ALS, ABT

|

Schottky, Advanced Low Power (ALS) Gates

About NPSL

Prohibited Materials

Parts Selection Table of Contents

Capacitors

Circuit Protection Devices

Fuses

Connectors

Filters

Inductors

Microcircuits

NEW!

Monolithics

Hybrids

Resistors

Semiconductors

(Summary)

Diodes

Transistors

Thermistors

Wire and Cable

NASA Parts Selection List (NPSL)

Radiation Test:

GSFC SEU Radiation Data Bank

JPL's Radiation Data Bank

Manufacturer:

Active Supplier Assessment Program (ASAP) Core Suppliers List

Part Procurement:

Part Number/Procurement details

Application Notes:

Applicable details

Last Update:

March 1998

Schottky, Advanced Low Power (ALS)

Gates

Generic or Manufacturer Part #	Description	Procurement Specification MIL-M-38510	Manufacturer	Device Class or Flow	Rad-Hard Level	Notes
54ALS00A	Quad 2-Input Nand	/37001	T.I.	B	-	-
54ALS10	Triple 3-Input Nand	/37002	T.I.	B	-	-
54ALS20A	Dual 4-Input Nand	/37003	T.I.	B	-	-
54ALS30A	8-Input Nand	/37004	T.I.	B	-	-
54AL133	13-Input Nand	/37005	T.I.	B	-	-
54ALS04B	Hex Inverter	/37006	T.I.	B	-	-
54ALS02	Quad 2-Input Nor	/37301	T.I.	B	-	-
54ALS27	Triple 3-Input Nor	/37302	T.I.	B	-	-
54ALS08	Quad 2-Input And	/37401	T.I.	B	-	-
54ALS11	Triple 3-Input And	/37402	T.I.	B	-	-
54ALS32	Quad 2-Input Or	/37501	T.I.	B	-	-
54ALS1000A	Quad 2-Input Nand	/38401	T.I.	B	-	-
54ALS1002	Quad 2-Input Nor	/38402	T.I.	B	-	-
54ALS1020	Dual 4-Input Nand	/38407	T.I.	B	-	-
54ALS138	3-To-8-Line Decod/Demux	/37701	T.I.	B	-	-

Parts

|

Packaging

|

Radiation
|
Publications
|
Calendar
|
Experts
Admin Login
|
Request Account
|
Feedback
|
Site Map
|
Help
|
Search
NEPP Program Manager:
Chuck Barnes, Jet Propulsion Laboratory
Responsible NASA Official:
Michael Sampson, NEPAG Manager
Website Comments:
Web Development Team
Last Modified:

August 8, 2001
AETD IT Security Banner
NASA Privacy Statement

Home
|
NASA Parts Selection List (NPSL)
|
Monolithic Microcircuits
|
Digital, Glue-Logic, BIPOLAR -- LS, ALS, ABT
|
Advanced BiCMOS,
54ABT Buffers/Drivers
About NPSL

Prohibited Materials
Parts Selection Table of Contents
Capacitors
Circuit Protection Devices
Fuses
Connectors
Filters
Inductors
Microcircuits
NEW!
Monolithics
Hybrids
Resistors
Semiconductors
(Summary)
Diodes
Transistors
Thermistors
Wire and Cable

NASA Parts Selection List (NPSL)

Radiation Test:	GSFC SEU Radiation Data Bank JPL's Radiation Data Bank
Manufacturer:	Active Supplier Assessment Program (ASAP) Core Suppliers List
Part Procurement:	Part Number/Procurement details
Application Notes:	Applicable details
Last Update:	March 1998

Advanced BiCMOS Technology (ABT), Digital
Buffers/Drivers

Generic or Manufacturer Part #	Description	Procurement Specification 5962-	Manufacturer	Device Class or Flow	Rad- Hard Level	Note
54ABT16244W	Buffer/Driver, 16-Bit, With 3-State Outputs, TTL-Comp. Inputs	9317402#*X	NSC	Q	-	-
54ABT240E	Buffer/Driver, Octal, Inverting, With 3-State Outputs, TTL-Compatible Inputs	9318801#*X	NSC	Q	-	-
54ABT240J	Buffer/Driver, Octal, Inverting, With 3-State Outputs, TTL-Compatible Inputs	9318801#*X	NSC	Q	-	-
54ABT240W	Buffer/Driver, Octal, Inverting, With 3-State Outputs, TTL Compatible Inputs	9318801#*X	NSC	Q	-	-
54ABT241E	Octal, Noninverting, With 3-State Output, TTL-Compatible Inputs	9322701#*X	NSC	Q	-	-
54ABT241J	Octal, Noninverting, With 3-State Output, TTL-Compatible Inputs	9322701#*X	NSC	Q	-	--
54ABT241W	Octal, Noninverting, With 3-State Output, TTL-Compatible Inputs	9322701#*X	NSC	Q	-	-
54ABT244E	Octal, Noninverting, W/3-State Outputs, TTL-Compatible Inputs	9214701#*X	NSC	Q	-	-
54ABT244E	Octal, Noninverting, W/3-State Outputs, TTL-Compatible Inputs	9214701#*X	NSC	V	-	-
54ABT244J	Buffer/Driver, Octal, Noninverting, W/3-State Outputs, TTL-Compatible Inputs	9214701#*X	NSC	Q	-	-
54ABT244J	Octal, Noninverting, W/3-State Outputs, TTL-Compatible Inputs	9214701#*X	NSC	V	-	-
54ABT244W	Octal, Noninverting, W/3-State Outputs, TTL-Compatible Inputs	9214701#*X	NSC	Q	-	-
54ABT244W	Octal, Noninverting, W/3-State Outputs, TTL-Compatible Inputs	9214701#*X	NSC	V	-	-
54ABT541E	Octal, Non-Inverting, W/3-State Outputs, TTL Compatible Inputs	9471801#*X	NSC	Q	-	-
54ABT541J	Octal, Non-Inverting, W/3-State Outputs, TTL Compatible Inputs	9471801#*X	NSC	Q	-	-
54ABT541W	Octal, Non-Inverting, W/3-State Outputs, TTL Compatible Inputs	9471801#*X	NSC	Q	-	-
SNJ54ABT162244WD	16-Bit, Noninverting, With 3-State Outputs, TTL-Compatible Inputs	9458701#*X	T.I.	Q	-	-
SNJ54ABT16240WD	Buffer/Driver, 16-Bit, Inverting, With 3-State Outputs, TTL-Compatible Inputs	9319901#*X	T.I.	M	-	-
SNJ54ABT16241WD	Buffer/Driver, 16-Bit, Non-Inverting, W/ 3-State Outputs, TTL Compatible Inputs	9450101#*X	T.I.	Q	-	-
SNJ54ABT16244WD	Buffer/Driver, 16-Bit, With 3-State Outputs, TTL-Comp. Inputs	9317401#*X	T.I.	M	-	-
SNJ54ABT2240FK	Buffer/Driver, Octal, W/Inverting 3-State Outpus And 25 Ohm Series Resistors	9469701#*X	T.I.	Q	-	-
SNJ54ABT2240J	Buffer/Driver, Octal, W/Inverting 3-State Outpus And 25 Ohm Series Resistors	9469701#*X	T.I.	Q	-	-
SNJ54ABT2240W	Buffer/Driver, Octal, W/Inverting 3-State Outpus And 25 Ohm Series Resistors	9469701#*X	T.I.	Q	-	-
SNJ54ABT2244FK	Buffer/Driver, Octal, With Noninverting 3-State Outputs, TTL-Compatible Inputs	9467301#*X	T.I.	Q	-	-
SNJ54ABT2244J	Buffer/Driver, Octal, With Noninverting 3-State Outputs, TTL-Compatible Inputs	9467301#*X	T.I.	Q	-	-
SNJ54ABT2244W	Buffer/Driver, Octal, With Noninverting 3-State Outputs, TTL-Compatible Inputs	9467301#*X	T.I.	Q	-	-
SNJ54ABT240FK	Buffer/Driver, Octal, Inverting, With 3-State Outputs, TTL-Compatible Inputs	9318801#*X	T.I.	M	-	-
SNJ54ABT240J	Buffer/Driver, Octal, Inverting, With 3-State Outputs, TTL-Compatible Inputs	9318801#*X	T.I.	M	-	-
SNJ54ABT240W	Buffer/Driver, Octal, Inverting, With 3-State Outputs, TTL-Compatible Inputs	9318801#*X	T.I.	M	-	-
SNJ54ABT241FK	Buffer/Driver, Octal, Noninverting, With 3-State Output, TTL-Compatible Inputs	9322701#*X	T.I.	Q	-	-
SNJ54ABT241J	Buffer/Driver, Octal, Noninverting, With 3-State Output, TTL-Compatible Inputs	9322701#*X	T.I.	Q	-	-
SNJ54ABT241W	Buffer/Driver, Octal, Noninverting, With 3-State Output, TTL-Compatible Inputs	9322701#*X	T.I.	Q	-	-
SNJ54ABT244J	Buffer/Driver, Octal, Noninverting, W/3-State Outputs, TTL-Compatible Inputs	9214701#*X	T.I.	M	-	-
SNJ54ABT541FK	Buffer/Driver, Octal, Non-Inverting, W/3-State Outputs, TTL Compatible Inputs	9471801#*X	T.I.	Q	-	-
SNJ54ABT541J	Buffer/Driver, Octal, Non-Inverting, W/3-State Outputs, TTL Compatible Inputs	9471801#*X	T.I.	Q	-	-
SNJ54ABT541W	Buffer/Driver, Octal, Non-Inverting, W/3-State Outputs, TTL Compatible Inputs	9471801#*X	T.I.	Q	-	-
SNJ54ABT827FK	Bus Driver, 10-Bit, Noninverting 3-State Outputs, TTL-Compatible Inputs	9450901#*X	T.I.	Q	-	-
SNJ54ABT827JT	Bus Driver, 10-Bit, Noninverting 3-State Outputs, TTL-Compatible Inputs	9450901#*X	T.I.	Q	-	-
SNJ54ABT827W	Bus Driver, 10-Bit, Noninverting 3-State Outputs, TTL-Compatible Inputs	9450901#*X	T.I.	Q	-	-
54ABT16245W	Bus Transceiver, 16-Bit, With 3-State Outputs, TTL-Compatible Inputs	9317502#*X	NSC	Q	-	-
54ABT16500W	Bus Transceiver, 18-Bit Universal, With Three-State Outputs	9687001#*X	NSC	Q	-	-
54ABT16646W	Bus Transceiver/Register, 16-Bit, W/3-State Outputs, TTL Compatible Inputs	9450202#*X	NSC	Q	-	-
54ABT245E	Bus Transceiver, 8-Bit, 3-State Outputs, TTL-Compatible Inputs	9214801#*X	NSC	Q	-	-
54ABT245J	Bus Transceiver, 8-Bit, 3-State Outputs, TTL-Compatible Inputs	9214801#*X	NSC	Q	-	-
54ABT245W	Bus Transceiver, 8-Bit, 3-State Outputs, TTL-Compatible Inputs	9214801#*X	NSC	Q	-	-

Parts
|
Packaging
|
Radiation
|
Publications
|
Calendar
|
Experts
Admin Login
|
Request Account
|
Feedback
|
Site Map
|
Help
|
Search
NEPP Program Manager:
Chuck Barnes, Jet Propulsion Laboratory
Responsible NASA Official:
Michael Sampson, NEPAG Manager
Website Comments:
Web Development Team
Last Modified:

August 8, 2001
AETD IT Security Banner
NASA Privacy Statement

Home
|
NASA Parts Selection List (NPLS)
|
Monolithic Microcircuits
|

NASA Parts Selection List (NPSL)
MICROCIRCUITS
(Monolithic)
DIGITAL, CMOS, HIGH SPEED, RADIATION HARDENED
SILICON-ON-SAPPHIRE (SOS)

TYPE	TECHNOLOGY	TECHNOLOGY
	54HCS	54HCTS TTL-Compatible
Buffers/Drivers	X	X
Counters	X	X
Decoder/Multiplexer	X	X
Flip-flops	X	X
Gates	X	X
Latches	X	X
Shift Registers	X	X

Parts
|
Packaging
|

Radiation
|
Publications
|
Calendar
|
Experts
Admin Login
|
Request Account
|
Feedback
|
Site Map
|
Help
|
Search
NEPP Program Manager:
Chuck Barnes, Jet Propulsion Laboratory
Responsible NASA Official:
Michael Sampson, NEPAG Manager
Website Comments:
Web Development Team
Last Modified:

August 8, 2001
AETD IT Security Banner
NASA Privacy Statement

Home
|
NASA Parts Selection List (NPLS)
|
Monolithic Microcircuits
|
Digital, CMOS, Radiation Hardened (SOS)
|
CMOS, High Speed (HCS), Radiation Hardened Silicon-On-Sapphire (SOS) Buffers/Drivers
About NPSL
Prohibited Materials

Parts Selection Table of Contents
Capacitors
Circuit Protection Devices
Fuses
Connectors
Filters
Inductors
Microcircuits
NEW!
Monolithics
Hybrids
Resistors
Semiconductors
(Summary)
Diodes
Transistors
Thermistors
Wire and Cable

NASA Parts Selection List (NPSL)
Radiation Test:
GSFC SEU Radiation Data Bank
JPL's Radiation Data Bank
Manufacturer:
Active Supplier Assessment Program (ASAP) Core Suppliers List
Part Procurement:
Part Number/Procurement details
Application Notes:
Applicable details
Last Update:
April 1998
CMOS, High Speed (HCS), Radiation Hardened
Silicon-On-Sapphire (SOS)
Buffers/Drivers

Generic or Manufacturer Part #	Description	Procurement Specification	Manufacturer	Device Class or Flow	Rad-Hard Level	Notes
HCS125MS	Buffer/Driver, Quad, Non-Inverting, With 3-State Outputs (Low Enable)	5962R9580301#*X	HSC	V	R	
HCS240MS	Buffer/Driver, Octal, Inverting, With 3-State Outputs	5962R9580901#*X	HSC	V	R	
HCS241MS	Buffer/Driver, Octal, Non-Inverting, With 3-State Outputs	5962R9581001#*X	HSC	V	R	
HCS244MS	Buffer/Driver, Octal, Non-Inverting, With 3-State Outputs	5962R9573101#*X	HSC	V	R	

Parts
|
Packaging
|
Radiation
|
Publications
|
Calendar
|
Experts
Admin Login
|
Request Account
|
Feedback
|
Site Map
|
Help
|
Search
NEPP Program Manager:
Chuck Barnes, Jet Propulsion Laboratory
Responsible NASA Official:
Michael Sampson, NEPAG Manager
Website Comments:
Web Development Team
Last Modified:
August 8, 2001
AETD IT Security Banner
NASA Privacy Statement

Home
|
NASA Parts Selection List (NPLS)
|
Monolithic Microcircuits
|
Digital, CMOS, Radiation Hardened (SOS)

|

CMOS, High Speed (HCS), Radiation Hardened Silicon-On-Sapphire (SOS) Counters

About NPSL

Prohibited Materials

Parts Selection Table of Contents

Capacitors

Circuit Protection Devices

Fuses

Connectors

Filters

Inductors

Microcircuits

NEW!

Monolithics

Hybrids

Resistors

Semiconductors

(Summary)

Diodes

Transistors

Thermistors

Wire and Cable

NASA Parts Selection List (NPSL)

Radiation Test:

GSFC SEU Radiation Data Bank

JPL's Radiation Data Bank

Manufacturer:

Active Supplier Assessment Program (ASAP) Core Suppliers List

Part Procurement:

Part Number/Procurement details

Application Notes:

Applicable details

Last Update:

April 1998

CMOS, High Speed (HCS), Radiation Hardened

Silicon-On-Sapphire (SOS)

Counters

Generic or Manufacturer Part #	Description	Procurement Specification	Manufacturer	Device Class or Flow	Rad-Hard Level	Notes
HCS160MS	Decade Counter, 4-Bit Synchronous, With Asynchronous Reset	5962R9580601#*X	HSC	V	R	

HCS161MS	Binary Counter, 4-Bit Synchronous, With Asynchronous Clear	5962R9573001#*X	HSC	V	R	
HCS163MS	Binary Counter, 4-Bit Synchronous, With Synchronous Clear	5962R9580701#*X	HSC	V	R	
HCS190MS	Decade Counter, 4-Bit Synchronous Up/Down	5962R9580801#*X	HSC	V	R	
HCS193MS	Binary Counter, 4-Bit Synchronous Up/Down, Presettable	5962R9578801#*X	HSC	V	R	

Parts

|

Packaging

|

Radiation

|

Publications

|

Calendar

|

Experts

Admin Login

|

Request Account

|

Feedback

|

Site Map

|

Help

|

Search

NEPP Program Manager:

Chuck Barnes, Jet Propulsion Laboratory

Responsible NASA Official:

Michael Sampson, NEPAG Manager

Website Comments:

Web Development Team

Last Modified:

August 8, 2001

AETD IT Security Banner

NASA Privacy Statement

Home

|

NASA Parts Selection List (NPLS)

|

Monolithic Microcircuits

|

Digital, CMOS, Radiation Hardened (SOS)

|

CMOS, High Speed (HCS), Radiation Hardened Silicon-On-Sapphire (SOS) Decoder/Multiplexer

About NPSL

Prohibited Materials

Parts Selection Table of Contents

Capacitors

Circuit Protection Devices

Fuses

Connectors

Filters

Inductors

Microcircuits

NEW!

Monolithics

Hybrids

Resistors

Semiconductors

(Summary)

Diodes

Transistors

Thermistors

Wire and Cable

NASA Parts Selection List (NPSL)

Radiation Test:

GSFC SEU Radiation Data Bank

JPL's Radiation Data Bank

Manufacturer:

Active Supplier Assessment Program (ASAP) Core Suppliers List

Part Procurement:

Part Number/Procurement details

Application Notes:

Applicable details

Last Update:

April 1998

CMOS, High Speed (HCS), Radiation Hardened

Silicon-On-Sapphire (SOS)

Decoder/Multiplexer

Generic or Manufacturer Part #	Description	Procurement Specification	Manufacturer	Device Class or Flow	Rad-Hard Level	Notes
HCS138MS	Decoder, 3-To-8-Line	5962R9572701#*X	HSC	V	R	
HCS139MS	Decoder, Dual 2-To-4-Line	5962R9580401#*X	HSC	V	R	
HCS151MS	Data Sel/Multiplexer, 8-Input, With Enable	5962R9572801#*X	HSC	V	R	
HCS154MS	Decoder, 4-To-16-Line	5962R9572901#*X	HSC	V	R	
HCS157MS	Data Sel/Multiplexer, Quad 2-Input	5962R9580501#*X	HSC	V	R	
HCS253MS	Data Sel/Multiplexer, Dual 4-Input, With 3-State Outputs	5962R9579001#*X	HSC	V	R	

NEPP Program Manager:

Chuck Barnes, Jet Propulsion Laboratory

Responsible NASA Official:

Michael Sampson, NEPAG Manager

Website Comments:

Web Development Team

Last Modified:

August 8, 2001

AETD IT Security Banner

NASA Privacy Statement

Home

|

NASA Parts Selection List (NPLS)

|

Monolithic Microcircuits

|

Digital, CMOS, Radiation Hardened (SOS)

|

CMOS, High Speed (HCS), Radiation Hardened Silicon-On-Sapphire (SOS) Flip Flops

About NPSL

Prohibited Materials

Parts Selection Table of Contents

Capacitors

Circuit Protection Devices

Fuses

Connectors

Filters

Inductors

Microcircuits

NEW!

Monolithics

Hybrids

Resistors

Semiconductors

(Summary)

Diodes

Transistors

Thermistors

Wire and Cable

NASA Parts Selection List (NPSL)

Radiation Test:

GSFC SEU Radiation Data Bank

JPL's Radiation Data Bank

Manufacturer:

Active Supplier Assessment Program (ASAP) Core Suppliers List

Part Procurement:

Part Number/Procurement details

Application Notes:

Applicable details

Last Update:

April 1998

CMOS, High Speed (HCS), Radiation Hardened

Silicon-On-Sapphire (SOS)

Flip-flops

Generic or Manufacturer Part #	Description	Procurement Specification	Manufacturer	Device Class or Flow	Rad-Hard Level	Notes
HCS74MS	Flip-flop, D-Type, Dual, With Preset and Clear	5962R9578201#*X	HSC	V	R	
HCS109MS	Flip-flop, JK, Dual	5962R9578401#*X	HSC	V	R	
HCS112MS	Flip-flop, JK, Dual, With Set and Reset	5962R9580201#*X	HSC	V	R	
HCS273MS	Flip-flop, D-Type, 8-Bit, With Clear	5962R9579101#*X	HSC	V	R	
HCS374MS	Flip-flop, D-Type, 8-Bit, With 3-State Outputs	5962R9579301#*X	HSC	V	R	

Parts

|

Packaging

|

Radiation

|

Publications

|

Calendar

|

Experts

Admin Login

|

Request Account

|

Feedback

|

Site Map

|

Help

|

Search

NEPP Program Manager:

Chuck Barnes, Jet Propulsion Laboratory

Responsible NASA Official:

Michael Sampson, NEPAG Manager

Website Comments:

Web Development Team

Last Modified:

August 8, 2001

AETD IT Security Banner

NASA Privacy Statement

Home

|

NASA Parts Selection List (NPLS)

|

Monolithic Microcircuits

|

Digital, CMOS, Radiation Hardened (SOS)

|

CMOS, High Speed (HCS), Radiation Hardened Silicon-On-Sapphire (SOS) Gates

About NPSL

Prohibited Materials

Parts Selection Table of Contents

Capacitors

Circuit Protection Devices

Fuses

Connectors

Filters

Inductors

Microcircuits

NEW!

Monolithics

Hybrids

Resistors

Semiconductors

(Summary)

Diodes

Transistors

Thermistors

Wire and Cable

NASA Parts Selection List (NPSL)

Radiation Test:

GSFC SEU Radiation Data Bank

JPL's Radiation Data Bank

Manufacturer:

Active Supplier Assessment Program (ASAP) Core Suppliers List

Part Procurement:

Part Number/Procurement details

Application Notes:

Applicable details

Last Update:

April 1998

CMOS, High Speed (HCS), Radiation Hardened

Silicon-On-Sapphire (SOS)

Gates

Generic or Manufacturer Part #	Description	Procurement Specification	Manufacturer	Device Class or Flow	Rad-Hard Level	Notes
HCS00MS	Nand Gate, Quad 2-Input	5962R9572401#*X	HSC	V	R	
HCS02MS	Nor Gate, 2-Input, Quad	5962R9567901#*X	HSC	V	R	
HCS04MS	Hex Inverter	5962R9572501#*X	HSC	V	R	
HCS05MS	Hex Inverter, With Open-Drain Outputs	5962R9580101#*X	HSC	V	R	
HCS08MS	And Gate, Quad, 2-Input	5962R9568001#*X	HSC	V	R	
HCS10MS	Nand Gate, Triple 3-Input	5962R9577701#*X	HSC	V	R	
HCS11MS	And Gate, Triple 3-Input	5962R9572001#*X	HSC	V	R	
HCS20MS	Nand Gate, Dual 4-Input	5962R9577801#*X	HSC	V	R	
HCS21MS	And Gate, Dual 4-Input	5962R9577901#*X	HSC	V	R	
HCS27MS	Nor Gate, Triple 3-Input	5962R9578001#*X	HSC	V	R	
HCS32MS	Or Gate, Quad 2-Input	5962R9578101#*X	HSC	V	R	
HCS86MS	Exclusive-Or Gate, Quad 2-Input	5962R9578301#*X	HSC	V	R	
HCS132MS	Nand Gate, Quad 2-Input, Schmitt Trigger	5962R9572601#*X	HSC	V	R	

Parts

|

Packaging

|

Radiation

|

Publications

|

Calendar

|

Experts

Admin Login

|

Request Account
|
Feedback
|
Site Map
|
Help
|
Search
NEPP Program Manager:
Chuck Barnes, Jet Propulsion Laboratory
Responsible NASA Official:
Michael Sampson, NEPAG Manager
Website Comments:
Web Development Team
Last Modified:
August 8, 2001
AETD IT Security Banner
NASA Privacy Statement

Home
|
NASA Parts Selection List (NPLS)
|
Monolithic Microcircuits
|
Digital, CMOS, Radiation Hardened (SOS)
|
CMOS, High Speed (HCS), Radiation Hardened Silicon-On-Sapphire (SOS) Latches
About NPSL
Prohibited Materials
Parts Selection Table of Contents
Capacitors
Circuit Protection Devices
Fuses
Connectors
Filters
Inductors
Microcircuits
NEW!

Monolithics

Hybrids

Resistors

Semiconductors

(Summary)

Diodes

Transistors

Thermistors

Wire and Cable

NASA Parts Selection List (NPSL)

Radiation Test:

GSFC SEU Radiation Data Bank

JPL's Radiation Data Bank

Manufacturer:

Active Supplier Assessment Program (ASAP) Core Suppliers List

Part Procurement:

Part Number/Procurement details

Application Notes:

Applicable details

Last Update:

April 1998

CMOS, High Speed (HCS), Radiation Hardened

Silicon-On-Sapphire (SOS)

Latches

Generic or Manufacturer Part #	Description	Procurement Specification	Manufacturer	Device Class or Flow	Rad-Hard Level	Notes
HCS373MS	Latch, D-Type, 8-Bit, With 3-State Outputs	5962R9579201#*X	HSC	V	R	
HCS573MS	Latch, D-Type, 8-Bit, With 3-State Outputs	5962R9579401#*X	HSC	V	R	

Parts

|

Packaging

|

Radiation

|

Publications

|

Calendar

|

Experts
Admin Login
|
Request Account
|
Feedback
|
Site Map
|
Help
|
Search
NEPP Program Manager:
Chuck Barnes, Jet Propulsion Laboratory
Responsible NASA Official:
Michael Sampson, NEPAG Manager
Website Comments:
Web Development Team
Last Modified:
August 8, 2001
AETD IT Security Banner
NASA Privacy Statement

Home
|
NASA Parts Selection List (NPLS)
|
Monolithic Microcircuits
|
Digital, CMOS, Radiation Hardened (SOS)
|
CMOS, High Speed (HCS), Radiation Hardened Silicon-On-Sapphire (SOS) Shift Registers
About NPSL
Prohibited Materials
Parts Selection Table of Contents
Capacitors
Circuit Protection Devices
Fuses
Connectors
Filters

Inductors

Microcircuits

NEW!

Monolithics

Hybrids

Resistors

Semiconductors

(Summary)

Diodes

Transistors

Thermistors

Wire and Cable

NASA Parts Selection List (NPSL)

Radiation Test:

GSFC SEU Radiation Data Bank

JPL's Radiation Data Bank

Manufacturer:

Active Supplier Assessment Program (ASAP) Core Suppliers List

Part Procurement:

Part Number/Procurement details

Application Notes:

Applicable details

Last Update:

April 1998

CMOS, High Speed (HCS), Radiation Hardened

Silicon-On-Sapphire (SOS)

Shift Registers

Generic or Manufacturer Part #	Description	Procurement Specification	Manufacturer	Device Class or Flow	Rad-Hard Level	Notes
HCS164MS	Shift Register, 8-Bit Serial-In, Parallel-Out	5962R9578501#*X	HSC	V	R	
HCS165MS	Shift Register, 8-Bit Parallel-In, Serial-Out	5962R9578601#*X	HSC	V	R	
HCS166MS	Shift Register, 8-Bit Par/Ser In, Ser Out	5962R9578701#*X	HSC	V	R	
HCS195MS	Shift Register, 4-Bit Parallel	5962R9578901#*X	HSC	V	R	

Parts

|

Packaging

|

Radiation

|

Publications
|
Calendar
|
Experts
Admin Login
|
Request Account
|
Feedback
|
Site Map
|
Help
|
Search
NEPP Program Manager:
Chuck Barnes, Jet Propulsion Laboratory
Responsible NASA Official:
Michael Sampson, NEPAG Manager
Website Comments:
Web Development Team
Last Modified:
August 8, 2001
AETD IT Security Banner
NASA Privacy Statement

Home
|
NASA Parts Selection List (NPLS)
|
Monolithic Microcircuits
|
Digital, CMOS, Radiation Hardened (SOS)
|
CMOS, High Speed, TTL Compatible (HCTS), Radiation Hardened Silicon-On-Sapphire (SOS) Buffers/Drivers
About NPSL
Prohibited Materials
Parts Selection Table of Contents
Capacitors

Circuit Protection Devices

Fuses

Connectors

Filters

Inductors

Microcircuits

NEW!

Monolithics

Hybrids

Resistors

Semiconductors

(Summary)

Diodes

Transistors

Thermistors

Wire and Cable

NASA Parts Selection List (NPSL)

Radiation Test:

GSFC SEU Radiation Data Bank

JPL's Radiation Data Bank

Manufacturer:

Active Supplier Assessment Program (ASAP) Core Suppliers List

Part Procurement:

Part Number/Procurement details

Application Notes:

Applicable details

Last Update:

April 1998

CMOS, High Speed, TTL Compatible (HCTS),

Radiation Hardened

Silicon-On-Sapphire (SOS)

Buffers/Drivers

Generic or Manufacturer Part #	Description	Procurement Specification	Manufacturer	Device Class or Flow	Rad-Hard Level	Notes
HCTS240MS	Buffer/Driver, Octal, Inverting, With 3-State Outputs	5962R9577201#*X	HSC	V	R	
HCTS244MS	Buffer/Driver, Octal, Non-Inverting, With 3-State Outputs	5962R9574401#*X	HSC	V	R	
HCTS365MS	Buffer/Driver, Hex, Non-Inverting, With 3-State Outputs	5962R9577501#*X	HSC	V	R	
HCTS541MS	Buffer/Driver, Octal, Non-Inverting, With 3-State Outputs	5962R9575101#*X	HSC	V	R	

|
Packaging
|
Radiation
|
Publications
|
Calendar
|
Experts
Admin Login
|
Request Account
|
Feedback
|
Site Map
|
Help
|
Search
NEPP Program Manager:
Chuck Barnes, Jet Propulsion Laboratory
Responsible NASA Official:
Michael Sampson, NEPAG Manager
Website Comments:
Web Development Team
Last Modified:
August 8, 2001
AETD IT Security Banner
NASA Privacy Statement

Home
|
NASA Parts Selection List (NPLS)
|
Monolithic Microcircuits
|
Digital, CMOS, Radiation Hardened (SOS)
|

CMOS, High Speed, TTL Compatible (HCTS), Radiation Hardened Silicon-On-Sapphire (SOS) Counters

About NPSL

Prohibited Materials

Parts Selection Table of Contents

Capacitors

Circuit Protection Devices

Fuses

Connectors

Filters

Inductors

Microcircuits

NEW!

Monolithics

Hybrids

Resistors

Semiconductors

(Summary)

Diodes

Transistors

Thermistors

Wire and Cable

NASA Parts Selection List (NPSL)

Radiation Test:

GSFC SEU Radiation Data Bank

JPL's Radiation Data Bank

Manufacturer:

Active Supplier Assessment Program (ASAP) Core Suppliers List

Part Procurement:

Part Number/Procurement details

Application Notes:

Applicable details

Last Update:

April 1998

CMOS, High Speed, TTL Compatible (HCTS),

Radiation Hardened

Silicon-On-Sapphire (SOS)

Counters

Generic or Manufacturer Part #	Description	Procurement Specification	Manufacturer	Device Class or Flow	Rad-Hard Level	Notes
HCTS93MS	Binary Counter, 4-Bit, TTL-Compatible Inputs	5962R9573701#*X	HSC	V	R	
HCTS160MS	Decade Counter, Asynchronous Reset, TTL-Compatible Inputs	5962R9574201#*X	HSC	V	R	
HCTS161MS	Binary Counter, 4-Bit Synchronous, With Async. Clear and LSTTL-Compatible Inputs	5962R9577001#*X	HSC	V	R	
HCTS163MS	Binary Counter, 4-Bit Synchronous, Pre-Settable, TTL-Compatible Inputs	5962R9574301#*X	HSC	V	R	
HCTS190MS	Decade Counter, 4-Bit Synchronous Up/Down	5962R9577101#*X	HSC	V	R	
HCTS191MS	Binary Counter, 4-Bit Synchronous Up/Down, Pre-Settable, TTL-Compatible Inputs	5962R9575601#*X	HSC	V	R	
HCTS193MS	Counter, 4-Bit, Binary, Up/Down, With TTL-Compatible Inputs	5962R9575701#*X	HSC	V	R	
HCTS390MS	Decade Counter, Dual 4-Bit, With A and B Inputs	5962R9574901#*X	HSC	V	R	
HCTS393MS	Binary Counter, Dual 4-Stage, TTL-Compatible Inputs	5962R9575001#*X	HSC	V	R	

NEPP Program Manager:
Chuck Barnes, Jet Propulsion Laboratory
Responsible NASA Official:
Michael Sampson, NEPAG Manager
Website Comments:
Web Development Team
Last Modified:
August 8, 2001

AETD IT Security Banner
NASA Privacy Statement

Home
|
NASA Parts Selection List (NPLS)
|
Monolithic Microcircuits
|
Digital, CMOS, Radiation Hardened (SOS)
|
CMOS, High Speed, TTL Compatible (HCTS), Radiation Hardened Silicon-On-Sapphire (SOS) Decoder/Multiplexer
About NPSL
Prohibited Materials
Parts Selection Table of Contents
Capacitors
Circuit Protection Devices
Fuses
Connectors
Filters
Inductors
Microcircuits
NEW!
Monolithics
Hybrids
Resistors
Semiconductors
(Summary)
Diodes
Transistors
Thermistors
Wire and Cable

NASA Parts
Selection List (NPSL)
Radiation Test:
GSFC SEU Radiation Data Bank
JPL's Radiation Data Bank
Manufacturer:
Active Supplier Assessment Program (ASAP) Core Suppliers List
Part Procurement:

Part Number/Procurement details

Application Notes:

Applicable details

Last Update:

April 1998

CMOS, High Speed, TTL Compatible (HCTS),

Radiation Hardened

Silicon-On-Sapphire (SOS)

Decoder/Multiplexer

Generic or Manufacturer Part #	Description	Procurement Specification	Manufacturer	Device Class or Flow	Rad-Hard Level	Notes
HCTS138MS	Decoder, 3-To-8-Line	5962R9574001#*X	HSC	V	R	
HCTS139MS	Decoder, Dual 2-To-4-Line	5962R9575301#*X	HSC	V	R	
HCTS147MS	Priority Encoder, 10-To-4-Line	5962R9574101#*X	HSC	V	R	
HCTS153MS	Data Sel/Multiplexer, Dual 4-Input, TTL-Compatible Inputs	5962R9575401#*X	HSC	V	R	
HCTS157MS	Data Sel/Multiplexer, Quad 2-Input, Non-Inverting, TTL-Compatible Inputs	5962R9575501#*X	HSC	V	R	

Parts

|

Packaging

|

Radiation

|

Publications

|

Calendar

|

Experts

Admin Login

|

Request Account

|

Feedback

|

Site Map

|

Help

|

Search

NEPP Program Manager:

Chuck Barnes, Jet Propulsion Laboratory

Responsible NASA Official:

Michael Sampson, NEPAG Manager

Website Comments:

Web Development Team

Last Modified:

August 8, 2001

AETD IT Security Banner

NASA Privacy Statement

Home

|

NASA Parts Selection List (NPLS)

|

Monolithic Microcircuits

|

Digital, CMOS, Radiation Hardened (SOS)

|

CMOS, High Speed, TTL Compatible (HCTS), Radiation Hardened Silicon-On-Sapphire (SOS) Flip Flops

About NPSL

Prohibited Materials

Parts Selection Table of Contents

Capacitors

Circuit Protection Devices

Fuses

Connectors

Filters

Inductors

Microcircuits

NEW!

Monolithics

Hybrids

Resistors

Semiconductors

(Summary)

Diodes

Transistors

Thermistors

Wire and Cable

Radiation Test:

GSFC SEU Radiation Data Bank

JPL's Radiation Data Bank

Manufacturer:

Active Supplier Assessment Program (ASAP) Core Suppliers List

Part Procurement:

Part Number/Procurement details

Application Notes:

Applicable details

Last Update:

April 1998

CMOS, High Speed, TTL Compatible (HCTS),

Radiation Hardened

Silicon-On-Sapphire (SOS)

Flip-flops

Generic or Manufacturer Part #	Description	Procurement Specification	Manufacturer	Device Class or Flow	Rad-Hard Level	Notes
HCTS109MS	Flip-flop, JK, Dual, With Set and Reset, TTL-Compatible Inputs	5962R9576901#*X	HSC	V	R	
HCTS112MS	Flip-flop, JK, Dual, With Set and Reset, TTL-Compatible Inputs	5962R9573801#*X	HSC	V	R	
HCTS273MS	Flip-flop, D-Type, 8-Bit, With Clear, TTL-Compatible Inputs	5962R9576401#*X	HSC	V	R	
HCTS374MS	Flip-flop, D-Type, 8-Bit, With Non-Inverting 3-State Outputs	5962R9574801#*X	HSC	V	R	
HCTS74MS	Flip-flop, D-Type, Dual, With Preset and Clear With TTL-Compatible Inputs	5962R9576301#*X	HSC	V	R	
HCTS574MS	Flip-flop, D-Type, 8-Bit, With 3-State Outputs	5962R9575801#*X	HSC	V	R	

Parts

|

Packaging

|

Radiation

|

Publications

|

Calendar

|

Experts

Admin Login

|

Request Account

|

Feedback

|

Site Map

|

Help

|

Search

NEPP Program Manager:

Chuck Barnes, Jet Propulsion Laboratory

Responsible NASA Official:

Michael Sampson, NEPAG Manager

Website Comments:

Web Development Team

Last Modified:

August 8, 2001

AETD IT Security Banner

NASA Privacy Statement

Home

|

NASA Parts Selection List (NPLS)

|

Monolithic Microcircuits

|

Digital, CMOS, Radiation Hardened (SOS)

|

CMOS, High Speed, TTL Compatible (HCTS), Radiation Hardened Silicon-On-Sapphire (SOS) Gates

About NPSL

Prohibited Materials

Parts Selection Table of Contents

Capacitors

Circuit Protection Devices

Fuses

Connectors

Filters

Inductors

Microcircuits

NEW!

Monolithics

Hybrids

Resistors

Semiconductors

(Summary)

Diodes

Transistors

Thermistors

Wire and Cable

NASA Parts Selection List (NPSL)

Radiation Test:

GSFC SEU Radiation Data Bank

JPL's Radiation Data Bank

Manufacturer:

Active Supplier Assessment Program (ASAP) Core Suppliers List

Part Procurement:

Part Number/Procurement details

Application Notes:

Applicable details

Last Update:

April 1998

CMOS, High Speed, TTL Compatible (HCTS),

Radiation Hardened

Silicon-On

-Sapphire (SOS)

Gates

Generic or Manufacturer Part #	Description	Procurement Specification	Manufacturer	Device Class or Flow	Rad-Hard Level	Notes
HCTS00MS	Nand Gate, Quad 2-Input, With TTL-Compatible Inputs	5962R9563701#*X	HSC	V	R	
HCTS02MS	Nor Gate, 2-Input, Quad, TTL-Compatible Inputs	5962R9568201#*X	HSC	V	R	
HCTS04MS	Hex Inverter, TTL-Compatible Inputs	5962R9573201#*X	HSC	V	R	
HCTS08MS	And Gate, Quad 2-Input, TTL-Compatible Inputs	5962R9568301#*X	HSC	V	R	
HCTS10MS	Nand Gate, Triple 3-Input, TTL Compatible Inputs	5962R9576501#*X	HSC	V	R	
HCTS11MS	And Gate, Triple 3-Input, TTL-Compatible Inputs	5962R9572101#*X	HSC	V	R	
HCTS14MS	Hex Inverter, Schmitt Trigger, With TTL-Compatible Inputs	5962R9571901#*X	HSC	V	R	
HCTS20MS	Nand Gate, Dual 4-Input, TTL-Compatible Inputs	5962R9573301#*X	HSC	V	R	
HCTS21MS	And Gate, Dual 4-Input, With TTL-Compatible Inputs	5962R9576601#*X	HSC	V	R	< /td>
HCTS27MS	Nor Gate, Triple 3-Input, TTL-Compatible Inputs	5962R9573401#*X	HSC	V	R	
HCTS30MS	Nand Gate, 8-Input, TTL-Compatible Inputs	5962R9573501#*X	HSC	V	R	
HCTS32MS	Or Gate, Quad 2-Input, With TTL-Compatible Inputs	5962R9573601#*X	HSC	V	R	
HCTS86MS	Exclusive-Or Gate, Quad 2-Input, TTL-Compatible Inputs	5962R9581401#*X	HSC	V	R	
HCTS132MS	Nand Gate, Quad 2-Input, Schmitt Trigger, TTL-Compatible Inputs	5962R9573901#*X	HSC	V	R	
HCTS4002MS	Nor Gate, Dual 4-Input, TTL-Compatible Inputs	5962R9576001#*X	HSC	V	R	
HCTS7266MS	Exclusive-Nor Gate, Quad 2-Input, With TTL-Compatible Inputs	5962R9575201#*X	HSC	V	R	

Parts

|
Packaging
|
Radiation
|
Publications
|
Calendar
|
Experts
Admin Login
|
Request Account
|
Feedback
|
Site Map
|
Help
|
Search
NEPP Program Manager:
Chuck Barnes, Jet Propulsion Laboratory
Responsible NASA Official:
Michael Sampson, NEPAG Manager
Website Comments:
Web Development Team
Last Modified:
August 8, 2001
AETD IT Security Banner
NASA Privacy Statement

Home
|
NASA Parts Selection List (NPLS)
|
Monolithic Microcircuits
|
Digital, CMOS, Radiation Hardened (SOS)
|

CMOS, High Speed, TTL Compatible (HCTS), Radiation Hardened Silicon-On-Sapphire (SOS) Latches

About NPSL

Prohibited Materials

Parts Selection Table of Contents

Capacitors

Circuit Protection Devices

Fuses

Connectors

Filters

Inductors

Microcircuits

NEW!

Monolithics

Hybrids

Resistors

Semiconductors

(Summary)

Diodes

Transistors

Thermistors

Wire and Cable

NASA Parts Selection List (NPSL)

Radiation Test:

GSFC SEU Radiation Data Bank

JPL's Radiation Data Bank

Manufacturer:

Active Supplier Assessment Program (ASAP) Core Suppliers List

Part Procurement:

Part Number/Procurement details

Application Notes:

Applicable details

Last Update:

April 1998

CMOS, High Speed, TTL Compatible (HCTS),

Radiation Hardened

Silicon-On

-Sapphire (SOS)

Latches

Generic or Manufacturer Part #	Description	Procurement Specification	Manufacturer	Device Class or Flow	Rad-Hard Level	Notes
HCTS75MS	Latch, Dual 2-Bit, Bi-Stable, Transparent, TTL-Compatible Inputs	5962R9576701#*X	HSC	V	R	
HCTS373MS	Latch, D-Type, 8-Bit, Transparent, With 3-State Outputs, TTL-Compatible Inputs	5962R9574701#*X	HSC	V	R	

Parts

|

Packaging

|

Radiation

|

Publications

|

Calendar

|

Experts

Admin Login

|

Request Account

|

Feedback

|

Site Map

|

Help

|

Search

NEPP Program Manager:

Chuck Barnes, Jet Propulsion Laboratory

Responsible NASA Official:

Michael Sampson, NEPAG Manager

Website Comments:

Web Development Team

Last Modified:

August 8, 2001

AETD IT Security Banner

NASA Privacy Statement

Home

|

NASA Parts Selection List (NPLS)

|

Monolithic Microcircuits

|

Digital, CMOS, Radiation Hardened (SOS)

|

CMOS, High Speed, TTL Compatible (HCTS), Radiation Hardened Silicon-On-Sapphire (SOS) Shift Registers

About NPSL

Prohibited Materials

Parts Selection Table of Contents

Capacitors

Circuit Protection Devices

Fuses

Connectors

Filters

Inductors

Microcircuits

NEW!

Monolithics

Hybrids

Resistors

Semiconductors

(Summary)

Diodes

Transistors

Thermistors

Wire and Cable

NASA Parts Selection List (NPSL)

Radiation Test:

GSFC SEU Radiation Data Bank

JPL's Radiation Data Bank

Manufacturer:

Active Supplier Assessment Program (ASAP) Core Suppliers List

Part Procurement:

Part Number/Procurement details

Application Notes:

Applicable details

Last Update:

April 1998

CMOS, High Speed, TTL Compatible (HCTS), Radiation Hardened

Silicon-On-Sapphire (SOS)

Shift Registers

Generic or Manufacturer Part #	Description	Procurement Specification	Manufacturer	Device Class or Flow	Rad-Hard Level	Notes
HCTS164MS	Shift Register, 8-Bit, Serial-In/Parallel-Out, TTL Comp. Inputs	5962R9566301#*X	HSC	V	R	
HCTS299MS	Shift Register, 8-Bit Universal, With 3-State Outputs	5962R9574601#*X	HSC	V	R	

Parts

|

Packaging

|

Radiation

|

Publications

|

Calendar

|

Experts

Admin Login

|

Request Account

|

Feedback

|

Site Map

|

Help

|

Search

NEPP Program Manager:

Chuck Barnes, Jet Propulsion Laboratory

Responsible NASA Official:

Michael Sampson, NEPAG Manager

Website Comments:

Web Development Team

Last Modified:

August 8, 2001

AETD IT Security Banner

NASA Privacy Statement

Home

|

NASA Parts Selection List (NPSL)

|

Monolithic Microcircuits

| Digital, CMOS, Radiation Hardened (Bulk and SOS)

About NPSL

Prohibited Materials

Parts Selection Table of Contents

Capacitors

Circuit Protection Devices

Fuses

Connectors

Filters

Inductors

Microcircuits

NEW!

Monolithics

Hybrids

Resistors

Semiconductors

(Summary)

Diodes

Transistors

Thermistors

Wire and Cable

NASA Parts Selection List (NPSL)

MICROCIRCUITS

(Monolithic)

DIGITAL, ADVANCED CMOS

SILICON-ON-SAPPHIRE (SOS) and BULK MSI

RADIATION HARDENED

TYPE	TECHNOLOGY	TECHNOLOGY
	ACS	ACTS TTL-Compatible
Buffers/Drivers	X	X
Counters	X	X
Flip-Flops	X	X
Gates	X	X
Latches	X	X
Multiplexers/Demux (Decoders)	X	X

Shift Registers	X	X
Transceivers	X	X

Parts

|

Packaging

|

Radiation

|

Publications

|

Calendar

|

Experts

Admin Login

|

Request Account

|

Feedback

|

Site Map

|

Help

|

Search

NEPP Program Manager:

Chuck Barnes, Jet Propulsion Laboratory

Responsible NASA Official:

Michael Sampson, NEPAG Manager

Website Comments:

Web Development Team

Last Modified:

August 8, 2001

AETD IT Security Banner

NASA Privacy Statement

Home

|

NASA Parts Selection List (NPSL)

|

Monolithic Microcircuits

|

Digital, CMOS, Radiation Hardened (Bulk and SOS)

|

Advanced CMOS (ACS)

Radiation Hardened

Buffers/Drivers

About NPSL

Prohibited Materials

Parts Selection Table of Contents

Capacitors

Circuit Protection Devices

Fuses

Connectors

Filters

Inductors

Microcircuits

NEW!

Monolithics

Hybrids

Resistors

Semiconductors

(Summary)

Diodes

Transistors

Thermistors

Wire and Cable

NASA Parts Selection List (NPSL)

Radiation Test:

GSFC SEU Radiation Data Bank

JPL's Radiation Data Bank

Manufacturer:

Active Supplier Assessment Program (ASAP) Core Suppliers List

Part Procurement:

Part Number/Procurement details

Application Notes:

Applicable details

Last Update:

July 1998

Advanced CMOS (ACS)

Radiation Hardened

Buffers/Drivers

Generic or Manufacturer Part #	Description	Procurement Specification	Manufacturer	Device Class or Flow	Rad-Hard Level	Notes
ACS125	Buffer, Quad, 3-State Output	5962F9670501#*X	HSC	V	F	1
ACS541	Buffer/Driver, Octal, Non1Inv., 3-State Output	5962F9671001#*X	HSC	V	F	1
UT54ACS11	Buffer, Hex, Non-Inv.	5962H9653001#*X	UTMC	V, Q	H	1
UT54ACS240	Buffer/Driver, Octal, Inverting, 3-State Output	5962H9656801#*X	UTMC	V, Q	H	1
UT54ACS244	Buffer/Driver, Octal, Non-Inv., 3-State Output	5962H9657001#*X	UTMC	V, Q	H	1
UT54ACS365	Buffer/Line Driver, Hex, Non-Inv., 3-State Output	5962H9658601#*X	UTMC	V, Q	H	1
UT54ACS540	Buffer/Driver, Octal, Inverting, 3-State Output	5962H9659201#*X	UTMC	V, Q	H	1
UT54ACS541	Buffer/Driver, Octal, Non-Inv., 3-State Output	5962H9659401#*X	UTMC	V, Q	H	1

NEPP Program Manager:

Chuck Barnes, Jet Propulsion Laboratory

Responsible NASA Official:

Michael Sampson, NEPAG Manager

Website Comments:

Web Development Team

Last Modified:

August 8, 2001

AETD IT Security Banner

NASA Privacy Statement

Home

|

NASA Parts Selection List (NPSL)

|

Monolithic Microcircuits

|

Digital, CMOS, Radiation Hardened (Bulk and SOS)

|

Advanced CMOS (ACS)

Radiation Hardened

Buffers/Drivers

| Aplication Notes

About NPSL

Prohibited Materials

Parts Selection Table of Contents

Capacitors

Circuit Protection Devices

Fuses

Connectors

Filters

Inductors

Microcircuits

NEW!

Monolithics

Hybrids

Resistors

Semiconductors

(Summary)

Diodes

Transistors

Thermistors

Wire and Cable

NASA Parts Selection List (NPSL)

Advanced CMOS (ACS) Radiation Hardened Buffers/Drivers

APPLICATION NOTES

(1) The ACS/ACTS families from Harris Semiconductor are fabricated using Silicon-on-Sapphire (SOS) technology, whereas UTMC ACS/ACTS devices are fabricated on Bulk CMOS Radiation Hardened technology.

NEPP Program Manager:

Chuck Barnes, Jet Propulsion Laboratory

Responsible NASA Official:

Michael Sampson, NEPAG Manager

Website Comments:

Web Development Team

Last Modified:

August 8, 2001

AETD IT Security Banner

NASA Privacy Statement

NASA Parts Selection List (NPSL)

|

Monolithic Microcircuits

|

Digital, CMOS, Radiation Hardened (Bulk and SOS)

|

Advanced CMOS (ACS)

Radiation Hardened

Counters

About NPSL

Prohibited Materials

Parts Selection Table of Contents

Capacitors

Circuit Protection Devices

Fuses

Connectors

Filters

Inductors

Microcircuits

NEW!

Monolithics

Hybrids

Resistors

Semiconductors

(Summary)

Diodes

Transistors

Thermistors

Wire and Cable

NASA Parts Selection List (NPSL)

Radiation Test:

GSFC SEU Radiation Data Bank

JPL's Radiation Data Bank

Manufacturer:

Active Supplier Assessment Program (ASAP) Core Suppliers List

Part Procurement:

Part Number/Procurement details

Application Notes:

Applicable details

Last Update:

July 1998

Advanced CMOS (ACS)

Radiation Hardened

Counters

Generic or Manufacturer Part #	Description	Procurement Specification	Manufacturer	Device Class or Flow	Rad-Hard Level	Notes
ACS161	Binary Counter, 4-Bit, Synchronous, Presettable	5962F9670601#*X	HSC	V	F	1
UT54ACS163	Binary Counter, 4-Bit, Synchronous, Presettable	5962H9655401#*X	UTMC	V, Q	H	1
UT54ACS169	Binary Counter, 4-Bit Synchronous Up/Down	5962H9656001#*X	UTMC	V, Q	H	1
UT54ACS190	Counter, Decade 4-Bit Synchronous Up/Down	5962H9656201#*X	UTMC	V, Q	H	1
UT54ACS191	Binary Counter, 4-Bit Synchronous Up/Down	5962H9656401#*X	UTMC	V, Q	H	1
UT54ACS193	Binary Counter, 4-Bit Syn Up/Down, Presettable	5962H9656601#*X	UTMC	V, Q	H	1

NEPP Program Manager:

Chuck Barnes, Jet Propulsion Laboratory

Responsible NASA Official:

Michael Sampson, NEPAG Manager

Website Comments:

Web Development Team

Last Modified:

August 8, 2001

AETD IT Security Banner

NASA Privacy Statement

Home

|

NASA Parts Selection List (NPSL)

|

Monolithic Microcircuits

|

Digital, CMOS, Radiation Hardened (Bulk and SOS)

|

Advanced CMOS (ACS)

Radiation Hardened

Counters

| Application Notes

About NPSL

Prohibited Materials

Parts Selection Table of Contents

Capacitors

Circuit Protection Devices

Fuses

Connectors

Filters

Inductors

Microcircuits

NEW!

Monolithics

Hybrids

Resistors

Semiconductors

(Summary)

Diodes

Transistors

Thermistors

Wire and Cable

NASA Parts Selection List (NPSL)

Advanced CMOS (ACS)

Radiation Hardened

Counters

APPLICATION NOTES

(1) The ACS/ACTS families from Harris Semiconductor are fabricated using Silicon-on-Sapphire (SOS) technology, whereas UTMC ACS/ACTS devices are fabricated on Bulk CMOS Radiation Hardened technology.

Parts

|

Packaging

|

Radiation

|

Publications

|

Calendar

|

Experts

Admin Login

|

Request Account

|

Feedback

|

Site Map

|

Help

|

Search

NEPP Program Manager:

Chuck Barnes, Jet Propulsion Laboratory

Responsible NASA Official:

Michael Sampson, NEPAG Manager

Website Comments:

Web Development Team

Last Modified:

August 8, 2001

AETD IT Security Banner

NASA Privacy Statement

Home

|

NASA Parts Selection List (NPSL)

|

Monolithic Microcircuits

|

Digital, CMOS, Radiation Hardened (Bulk and SOS)

|

Advanced CMOS (ACS)

Radiation Hardened

Flip Flops

About NPSL

Prohibited Materials

Parts Selection Table of Contents

Capacitors

Circuit Protection Devices

Fuses

Connectors

Filters

Inductors

Microcircuits

NEW!

Monolithics

Hybrids

Resistors

Semiconductors

(Summary)

Diodes

Transistors

Thermistors

Wire and Cable

NASA Parts Selection List (NPSL)

Radiation Test:

GSFC SEU Radiation Data Bank

JPL's Radiation Data Bank

Manufacturer:

Active Supplier Assessment Program (ASAP) Core Suppliers List

Part Procurement:

Part Number/Procurement details

Application Notes:

Applicable details

Last Update:

July 1998

Advanced CMOS (ACS)

Radiation Hardened

Flip-Flops

Generic or Manufacturer Part #	Description	Procurement Specification	Manufacturer		Device Class or Flow	Rad-Hard Level	Notes
ACS74	Flip-Flop, D-Type, Dual, Positive Edge-Triggered, Set and Clear	5962F9679901#*X	HSC		V, Q	F	1
ACS112	Flip-Flop, JK, Dual, Negative Edge-Triggered, Asynchronous Set and Clear	5962F9670401#*X	HSC		V, Q	F	1
ACS374	Flip-Flop, D-Type, 8-Bit, 3-State Output	5962F9565601#*X	HSC		V, Q	F	1
UT54ACS74	Flip-Flop, D-Type, Dual, Positive Edge-Triggered, Set and Clear	5962H9653401#*X	UTMC		V, Q	H	1
UT54ACS109	Flip-Flop, JK, Dual, Positive Edge-Triggered, Set and Clear	5962H9654001#*X	UTMC		V, Q	H	1
UT54ACS273	Flip-Flop, D-Type, 8-Bit, with Clear	5962H9657801#*X	UTMC		V, Q	H	1
UT54ACS374	Flip-Flop, D-Type, 8-Bit, 3-State Output	5962H9659001#*X	UTMC		V, Q	H	1

Parts

|

Packaging

|

Radiation

|

Publications

|

Calendar

|

Experts

Admin Login

|

Request Account

|

Feedback

|

Site Map

|

Help

|

Search

NEPP Program Manager:

Chuck Barnes, Jet Propulsion Laboratory

Responsible NASA Official:

Michael Sampson, NEPAG Manager

Website Comments:

Web Development Team

Last Modified:

September 11, 2001

AETD IT Security Banner

NASA Privacy Statement

Home

|

NASA Parts Selection List (NPSL)

|

Monolithic Microcircuits

|

Digital, CMOS, Radiation Hardened (Bulk and SOS)

|

Advanced CMOS (ACS)

Radiation Hardened

Flip Flops

| Application Notes

About NPSL

Prohibited Materials

Parts Selection Table of Contents

Capacitors

Circuit Protection Devices

Fuses

Connectors

Filters

Inductors

Microcircuits

NEW!

Monolithics

Hybrids

Resistors

Semiconductors

(Summary)

Diodes

Transistors

Thermistors

Wire and Cable

Field Programmable Gate Arrays (FPGAs)

APPLICATION NOTES

(1) The RH1020 and RH1280 are processed on Actel's 0.8 micron epitaxial bulk CMOS process. The manufacturer guarantees device performance to 300Krads.

NEPP Program Manager:

Chuck Barnes, Jet Propulsion Laboratory

Responsible NASA Official:

Michael Sampson, NEPAG Manager

Website Comments:

Web Development Team

Last Modified:

August 8, 2001

AETD IT Security Banner

NASA Privacy Statement

|

Monolithic Microcircuits

|

Digital, CMOS, Radiation Hardened (Bulk and SOS)

|

Advanced CMOS (ACS)

Radiation Hardened

Gates

About NPSL

Prohibited Materials

Parts Selection Table of Contents

Capacitors

Circuit Protection Devices

Fuses

Connectors

Filters

Inductors

Microcircuits

NEW!

Monolithics

Hybrids

Resistors

Semiconductors

(Summary)

Diodes

Transistors

Thermistors

Wire and Cable

NASA Parts Selection List (NPSL)

Radiation Test:

GSFC SEU Radiation Data Bank

JPL's Radiation Data Bank

Manufacturer:

Active Supplier Assessment Program (ASAP) Core Suppliers List

Part Procurement:

Part Number/Procurement details

Application Notes:

Applicable details

Last Update:

July 1998

Advanced CMOS (ACS)

Radiation Hardened

Gates

Generic or Manufacturer Part #	Description	Procurement Specification	Manufacturer	Device Class or Flow	Rad-Hard Level	Notes
ACS00	NAND Gate, Quad 2-Input	5962F9565001#*X	HSC	V	F	1
ACS03	NAND Gate, Quad 2-Input, Open Drain Output	5962F9670301#*X	HSC	V	F	1
ACS08	AND Gate, Quad 2-Input	5962F9565101#*X	HSC	V	F	1
ACS10	NAND Gate, Triple 3-Input	5962F9565201#*X	HSC	V	F	1
ACS20	NAND Gate, Dual 4-Input	5962F9565301#*X	HSC	V	F	1
ACS86	Exclusive-OR Gate, Quad 2-Input	5962F9565401#*X	HSC	V	F	1
UT54ACS00	NAND Gate, Quad 2-Input	5962H9651201#*X	UTMC	V, Q	H	1
UT54ACS08	AND Gate, Quad 2-Input	5962H9651801#*X	UTMC	V, Q	H	1
UT54ACS11	AND Gate, Triple 3-Input	5962H9652201#*X	UTMC	V, Q	H	1
UT54ACS20	NAND Gate, Dual 4-Input	5962H9652601#*X	UTMC	V, Q	H	1
UT54ACS27	NOR Gate, Triple 3-Input	5962H9652801#*X	UTMC	V, Q	H	1
UT54ACS54	AND-OR-Invert Gate, 4-Wide 2-Input	5962H9653201#*X	UTMC	V, Q	H	1
UT54ACS86	Exclusive-OR Gate, Quad 2-Input	5962H9653801#*X	UTMC	V, Q	H	1
UT54ACS132	NAND Gate, Quad 2-Input, Schmitt Trigger	5962H9654201#*X	UTMC	V, Q	H	1

Search

NEPP Program Manager:

Chuck Barnes, Jet Propulsion Laboratory

Responsible NASA Official:

Michael Sampson, NEPAG Manager

Website Comments:

Web Development Team

Last Modified:

August 8, 2001

AETD IT Security Banner

NASA Privacy Statement

Home

|

NASA Parts Selection List (NPSL)

|

Monolithic Microcircuits

|

Digital, CMOS, Radiation Hardened (Bulk and SOS)

|

Advanced CMOS (ACS)

Radiation Hardened

Gates

| Application Notes

About NPSL

Prohibited Materials

Parts Selection Table of Contents

Capacitors

Circuit Protection Devices

Fuses

Connectors

Filters

Inductors

Microcircuits

NEW!

Monolithics

Hybrids

Resistors

Semiconductors

(Summary)

Diodes

Transistors

Thermistors

Wire and Cable

NASA Parts Selection List (NPSL)

Advanced CMOS (ACS)

Radiation Hardened

Gates

APPLICATION NOTES

(1) The ACS/ACTS families from Harris Semiconductor are fabricated using Silicon-on-Sapphire (SOS) technology, whereas UTMC ACS/ACTS devices are fabricated on Bulk CMOS Radiation Hardened technology.

Parts

|

Packaging

|

Radiation

|

Publications

|

Calendar

|

Experts

Admin Login

|

Request Account

|

Feedback

|

Site Map

|

Help

|

Search

NEPP Program Manager:

Chuck Barnes, Jet Propulsion Laboratory

Responsible NASA Official:

Michael Sampson, NEPAG Manager

Website Comments:

Web Development Team

Last Modified:

August 8, 2001

AETD IT Security Banner

NASA Privacy Statement

Home

|

NASA Parts Selection List (NPSL)

|

Monolithic Microcircuits

|

Digital, CMOS, Radiation Hardened (Bulk and SOS)

|

Advanced CMOS (ACS)

Radiation Hardened

Latches

About NPSL

Prohibited Materials

Parts Selection Table of Contents

Capacitors

Circuit Protection Devices

Fuses

Connectors

Filters

Inductors

Microcircuits

NEW!

Monolithics

Hybrids

Resistors

Semiconductors

(Summary)

Diodes

Transistors

Thermistors

Wire and Cable

NASA Parts Selection List (NPSL)

Radiation Test:

GSFC SEU Radiation Data Bank

JPL's Radiation Data Bank

Manufacturer:

Active Supplier Assessment Program (ASAP) Core Suppliers List

Part Procurement:

Part Number/Procurement details

Application Notes:

Applicable details

Last Update:

July 1998

Advanced CMOS (ACS)

Radiation Hardened

Latches

Generic or Manufacturer Part #	Description	Procurement Specification	Manufacturer	Device Class or Flow	Rad-Hard Level	Notes
ACS373	Latch, D-Type, 8-Bit, Transparent 3-State Output	5962F9565501#*X	HSC	V, Q	F	1
ACS573	Latch, D-Type, 8-Bit, 3-State Output	5962F9672401#*X	HSC	V, Q	F	1
UT54ACS279	Latch, RS, 4-Bit	5962H9658001#*X	UTMC	V, Q	H	1
UT54ACS373	Latch, D-Type, 8-Bit, Transparent, 3-State Output	5962H9658801#*X	UTMC	V, Q	H	1

Parts

|

Packaging

|

Radiation

|

Publications

|

Calendar

|

Experts

Admin Login

|

Request Account

|

Feedback

|

Site Map

|

Help

|

Search

NEPP Program Manager:

Chuck Barnes, Jet Propulsion Laboratory

Responsible NASA Official:

Michael Sampson, NEPAG Manager

Website Comments:

Web Development Team

Last Modified:

August 8, 2001

AETD IT Security Banner

NASA Privacy Statement

Home

|

NASA Parts Selection List (NPSL)

|

Monolithic Microcircuits

|

Digital, CMOS, Radiation Hardened (Bulk and SOS)

|

Advanced CMOS (ACS)

Radiation Hardened Buffers/Drivers

| Application Notes

About NPSL

Prohibited Materials

Parts Selection Table of Contents

Capacitors

Circuit Protection Devices

Fuses

Connectors

Filters

Inductors

Microcircuits

NEW!

Monolithics

Hybrids

Resistors

Semiconductors

(Summary)

Diodes

Transistors

Thermistors

Wire and Cable

NASA Parts Selection List (NPSL)

Advanced CMOS (ACS) Radiation Hardened Latches

APPLICATION NOTES

(1) The ACS/ACTS families from Harris Semiconductor are fabricated using Silicon-on-Sapphire (SOS) technology, whereas UTMC ACS/ACTS devices are fabricated on Bulk CMOS Radiation Hardened technology.

Parts

|

Packaging

|

Radiation

|

Publications

|

Calendar

|

Experts

Admin Login

|

Request Account

|

Feedback

|

Site Map

|

Help

|

Search

NEPP Program Manager:

Chuck Barnes, Jet Propulsion Laboratory

Responsible NASA Official:

Michael Sampson, NEPAG Manager

Website Comments:

Web Development Team

Last Modified:

August 8, 2001

AETD IT Security Banner

NASA Privacy Statement

Home
|
NASA Parts Selection List (NPSL)
|
Monolithic Microcircuits
|
Digital, CMOS, Radiation Hardened (Bulk and SOS)
|
Advanced CMOS (ACS)
Radiation Hardened Mulitplexers/Demux (Decoders)
About NPSL
Prohibited Materials
Parts Selection Table of Contents
Capacitors
Circuit Protection Devices
Fuses
Connectors
Filters
Inductors
Microcircuits
NEW!
Monolithics
Hybrids
Resistors
Semiconductors
(Summary)
Diodes
Transistors
Thermistors
Wire and Cable

NASA Parts Selection List (NPSL)
Radiation Test:
GSFC SEU Radiation Data Bank

JPL's Radiation Data Bank
Manufacturer:
Active Supplier Assessment Program (ASAP) Core Suppliers List
Part Procurement:
Part Number/Procurement details

Application Notes:

Applicable details

Last Update:

July 1998

Advanced CMOS Silicon-on-Sapphire (ACS)

Radiation Hardened

Multiplexers/Demux (Decoders)

Generic or Manufacturer Part #	Description	Procurement Specification	Manufacturer	Device Class or Flow	Rad-Hard Level	Notes
UT54ACS138	Demux/Decoder, 3-8 Line	5962H9655401#*X	UTMC	V, Q	H	1
UT54ACS139	Decoder, Dual 2-4 Line	5962H9654601#*X	UTMC	V, Q	H	1
UT54ACS151	Data Sel/Mux, 8-Input	5962H9654801#*X	UTMC	V, Q	H	1
UT54ACS153	Data Sel/Mux, Dual 4-Input	5962H9655001#*X	UTMC	V, Q	H	1
UT54ACS157	Data Sel/Mux, Quad 2-Input	5962H9655201#*X	UTMC	V, Q	H	1
UT54ACS253	Data Sel/Mux, Dual 4-Input, 3-State Output	5962H9657401#*X	UTMC	V, Q	H	1

Parts

|

Packaging

|

Radiation

|

Publications

|

Calendar

|

Experts

Admin Login

|

Request Account

|

Feedback

|

Site Map

|

Help

|

Search

NEPP Program Manager:

Chuck Barnes, Jet Propulsion Laboratory

Responsible NASA Official:

Michael Sampson, NEPAG Manager

Website Comments:

Web Development Team

Last Modified:

August 8, 2001

AETD IT Security Banner

NASA Privacy Statement

Home

|

NASA Parts Selection List (NPSL)

|

Monolithic Microcircuits

|

Digital, CMOS, Radiation Hardened (Bulk and SOS)

|

Advanced CMOS (ACS)

Radiation Hardened Mulitplexer/Demux (Decoders)

| Application Notes

About NPSL

Prohibited Materials

Parts Selection Table of Contents

Capacitors

Circuit Protection Devices

Fuses

Connectors

Filters

Inductors

Microcircuits

NEW!

Monolithics

Hybrids

Resistors

Semiconductors

(Summary)

Diodes

Transistors

Thermistors

Wire and Cable

NASA Parts Selection List (NPSL)

Advanced CMOS (ACS) Radiation Hardened Multiplexers/Demux (Decoders)

APPLICATION NOTES

(1) The ACS/ACTS families from Harris Semiconductor are fabricated using Silicon-on-Sapphire (SOS) technology, whereas UTMC ACS/ACTS devices are fabricated on Bulk CMOS Radiation Hardened technology.

Parts

|

Packaging

|

Radiation

|

Publications

|

Calendar

|

Experts

Admin Login

|

Request Account

|

Feedback

|

Site Map

|

Help

|

Search

NEPP Program Manager:

Chuck Barnes, Jet Propulsion Laboratory

Responsible NASA Official:

Michael Sampson, NEPAG Manager

Website Comments:

Web Development Team

Last Modified:

August 8, 2001

AETD IT Security Banner

NASA Privacy Statement

Home

|

NASA Parts Selection List (NPSL)

|

Monolithic Microcircuits

|

Digital, CMOS, Radiation Hardened (Bulk and SOS)

|

Advanced CMOS (ACS)

Radiation Hardened

Shift Registers

About NPSL

Prohibited Materials

Parts Selection Table of Contents

Capacitors

Circuit Protection Devices

Fuses

Connectors

Filters

Inductors

Microcircuits

NEW!

Monolithics

Hybrids

Resistors

Semiconductors

(Summary)

Diodes

Transistors

Thermistors

Wire and Cable

NASA Parts Selection List (NPSL)

Radiation Test:

GSFC SEU Radiation Data Bank

JPL's Radiation Data Bank

Manufacturer:

Active Supplier Assessment Program (ASAP) Core Suppliers List

Part Procurement:

Part Number/Procurement details

Application Notes:

Applicable details

Last Update:

July 1998

Advanced CMOS (ACS)

Radiation Hardened

Shift Registers

Generic or Manufacturer Part #	Description	Procurement Specification	Manufacturer		Device Class or Flow	Rad-Hard Level	Notes
UT54ACS164	Shift Register, 8-Bit Serial-In, Parallel-Out	5962H9655601#*X	UTMC		V, Q	H	1
UT54ACS165	Shift Register, 8-Bit Parallel-In, Serial-Out	5962H9655801#*X	UTMC		V, Q	H	1

Parts

|

Packaging

|

Radiation

|

Publications

|

Calendar

|

Experts

Admin Login

|

Request Account

|

Feedback

|

Site Map

|

Help

|

Search

NEPP Program Manager:

Chuck Barnes, Jet Propulsion Laboratory

Responsible NASA Official:

Michael Sampson, NEPAG Manager

Website Comments:

Web Development Team

Last Modified:

August 8, 2001

AETD IT Security Banner

NASA Privacy Statement

Home

|

NASA Parts Selection List (NPSL)

|

Monolithic Microcircuits

|

Digital, CMOS, Radiation Hardened (Bulk and SOS)

|

Advanced CMOS (ACS)

Radiation Hardened

Shift Registers

| Application Notes

About NPSL

Prohibited Materials

Parts Selection Table of Contents

Capacitors

Circuit Protection Devices

Fuses

Connectors

Filters

Inductors

Microcircuits

NEW!

Monolithics

Hybrids

Resistors

Semiconductors

(Summary)

Diodes

Transistors

Thermistors

Wire and Cable

NASA Parts Selection List (NPSL)

Advanced CMOS (ACS) Radiation Hardened Shift Registers

APPLICATION NOTES

(1) The ACS/ACTS families from Harris Semiconductor are fabricated using Silicon-on-Sapphire (SOS) technology, whereas UTMC ACS/ACTS devices are fabricated on Bulk CMOS Radiation Hardened technology.

Parts

|

Packaging

|

Radiation

|

Publications

|

Calendar

|

Experts

Admin Login

|

Request Account

|

Feedback

|

Site Map

|

Help

|

Search

NEPP Program Manager:

Chuck Barnes, Jet Propulsion Laboratory

Responsible NASA Official:

Michael Sampson, NEPAG Manager

Website Comments:

Web Development Team

Last Modified:

August 8, 2001

AETD IT Security Banner

NASA Privacy Statement

Home

|

NASA Parts Selection List (NPSL)

|

Monolithic Microcircuits

|

Digital, CMOS, Radiation Hardened (Bulk and SOS)

|

Advanced CMOS (ACS)

Radiation Hardened

Transceivers

About NPSL

Prohibited Materials

Parts Selection Table of Contents

Capacitors

Circuit Protection Devices

Fuses

Connectors

Filters

Inductors

Microcircuits

NEW!

Monolithics

Hybrids

Resistors

Semiconductors

(Summary)

Diodes

Transistors

Thermistors

Wire and Cable

NASA Parts Selection List (NPSL)

Radiation Test:

GSFC SEU Radiation Data Bank

JPL's Radiation Data Bank

Manufacturer:

Active Supplier Assessment Program (ASAP) Core Suppliers List

Part Procurement:

Part Number/Procurement details

Application Notes:

Applicable details

Last Update:

July 1998

Advanced CMOS (ACS)

Radiation Hardened

Transceivers

Generic or Manufacturer Part #	Description	Procurement Specification	Manufacturer	Device Class or Flow	Rad-Hard Level	Notes
ACS245	Bus Transceiver, 8-Bit, Bidirectional, 3-State inputs/outputs	5962F9670701#*X	HSC	V	F	1
ACS245	Bus Transceiver, 8-Bit, Bidirectional, 3-State inputs/outputs	5962F9670702#*X	HSC	V	F	1
UT54ACS245	Bus Transceiver, 8-Bit, Bidirectional, 3-State inputs/outputs	5962H9657201#*X	UTMC	V, Q	H	1
UT54ACS245	Bus Transceiver, 8-Bit, Bidirectional, 3-State inputs/outputs	5962H9657202#*X	UTMC	V, Q	H	1

Parts

|

Packaging

|

Radiation

|

Publications

|

Calendar

|

Experts

Admin Login

|

Request Account

|

Feedback

|

Site Map

|

Help

|

Search

NEPP Program Manager:

Chuck Barnes, Jet Propulsion Laboratory

Responsible NASA Official:

Michael Sampson, NEPAG Manager

Website Comments:

Web Development Team

Last Modified:

August 8, 2001

NASA Parts Selection List (NPSL)

Advanced CMOS (ACS) Radiation Hardened Transceivers

APPLICATION NOTES

(1) The ACS/ACTS families from Harris Semiconductor are fabricated using Silicon-on-Sapphire (SOS) technology, whereas UTMC ACS/ACTS devices are fabricated on Bulk CMOS Radiation Hardened technology.

Parts
|
Packaging
|
Radiation
|
Publications
|
Calendar
|
Experts
Admin Login
|
Request Account
|
Feedback
|
Site Map
|
Help
|
Search
NEPP Program Manager:
Chuck Barnes, Jet Propulsion Laboratory
Responsible NASA Official:
Michael Sampson, NEPAG Manager
Website Comments:
Web Development Team
Last Modified:

August 8, 2001
AETD IT Security Banner
NASA Privacy Statement

Home
|
NASA Parts Selection List (NPSL)
|
Monolithic Microcircuits
|
Digital, CMOS, Radiation Hardened (Bulk and SOS)

|

Advanced CMOS TTL Compatible (ACTS)

Radiation Hardened

Buffers/Drivers

About NPSL

Prohibited Materials

Parts Selection Table of Contents

Capacitors

Circuit Protection Devices

Fuses

Connectors

Filters

Inductors

Microcircuits

NEW!

Monolithics

Hybrids

Resistors

Semiconductors

(Summary)

Diodes

Transistors

Thermistors

Wire and Cable

NASA Parts Selection List (NPSL)

Radiation Test:

GSFC SEU Radiation Data Bank

JPL's Radiation Data Bank

Manufacturer:

Active Supplier Assessment Program (ASAP) Core Suppliers List

Part Procurement:

Part Number/Procurement details

Application Notes:

Applicable details

Last Update:

July 1998

Advanced CMOS TTL Compatible (ACTS)

Radiation Hardened

Buffers/Drivers

Generic or Manufacturer Part #	Description	Procurement Specification	Manufacturer	Device Class or Flow	Rad-Hard Level	Notes
ACTS125	Buffer, Quad, 3-State Outputs, TTL-Comp. Inputs	5962F9671501#*X	HSC	V, Q	F	-
ACTS240	Buffer/Driver, Octal, Inverting, 3-State Outputs, TTL-Comp. Inputs	5962F9671701#*X	HSC	V, Q	F	-
ACTS244	Buffer/Driver, Noninverting, 3-State Outputs, TTL-Comp. Inputs	5962F9671801#*X	HSC	V, Q	F	-
ACTS541	Buffer/Driver, Noninverting, 3-State Outputs, TTL-Comp. Inputs	5962F9672601#*X	HSC	V, Q	F	-
UT54ACTS34	Buffer, Hex, Noninverting	5962H9653101#*X	UTMC	V, Q	H	1
UT54ACTS240	Buffer/Driver, Octal, Inverting, 3-State Outputs, TTL-Comp.,Inputs	5962H9656901#*X	UTMC	V, Q	H	1
UT54ACTS244	Buffer/Driver, Noninverting, 3-State Outputs, TTL-Comp. Inputs	5962H9657101#*X	UTMC	V, Q	H	1
UT54ACTS365	Buffer/Line Driver, 3-State Outputs	5962H9658701#*X	UTMC	V, Q	H	1
UT54ACTS541	Buffer/Driver, 3-State Outputs, TTL-Comp. Inputs	5962H9659501#*X	UTMC	V, Q	H	1

NEPP Program Manager:
Chuck Barnes, Jet Propulsion Laboratory
Responsible NASA Official:
Michael Sampson, NEPAG Manager
Website Comments:
Web Development Team

Last Modified:

August 8, 2001

AETD IT Security Banner

NASA Privacy Statement

Home

|

NASA Parts Selection List (NPSL)

|

Monolithic Microcircuits

|

Digital, CMOS, Radiation Hardened (Bulk and SOS)

|

Advanced CMOS TTL Compatible (ACTS)

Radiation Hardened

Buffers/Drivers

| Application Notes

About NPSL

Prohibited Materials

Parts Selection Table of Contents

Capacitors

Circuit Protection Devices

Fuses

Connectors

Filters

Inductors

Microcircuits

NEW!

Monolithics

Hybrids

Resistors

Semiconductors

(Summary)

Diodes

Transistors

Thermistors

Wire and Cable

NASA Parts Selection List (NPSL)

Advanced CMOS TTL Compatible (ACTS)

Radiation Hardened Buffers/Drivers

APPLICATION NOTES

(1) The ACS/ACTS families from Harris Semiconductor are fabricated using Silicon-on-Sapphire (SOS) technology, whereas UTMC ACS/ACTS devices are fabricated on Bulk CMOS Radiation Hardened technology.

NEPP Program Manager:

Chuck Barnes, Jet Propulsion Laboratory

Responsible NASA Official:

Michael Sampson, NEPAG Manager

Website Comments:

Web Development Team

Last Modified:

August 8, 2001

AETD IT Security Banner

NASA Privacy Statement

NASA Parts Selection List (NPSL)

|

Monolithic Microcircuits

|

Digital, CMOS, Radiation Hardened (Bulk and SOS)

|

Advanced CMOS TTL Compatible (ACTS)

Radiation Hardened

Counters

About NPSL

Prohibited Materials

Parts Selection Table of Contents

Capacitors

Circuit Protection Devices

Fuses

Connectors

Filters

Inductors

Microcircuits

NEW!

Monolithics

Hybrids

Resistors

Semiconductors

(Summary)

Diodes

Transistors

Thermistors

Wire and Cable

NASA Parts Selection List (NPSL)

Radiation Test:

GSFC SEU Radiation Data Bank

JPL's Radiation Data Bank

Manufacturer:

Active Supplier Assessment Program (ASAP) Core Suppliers List

Part Procurement:

Part Number/Procurement details

Application Notes:

Applicable details

Last Update:

July 1998

Advanced CMOS TTL Compatible (ACTS)

Radiation Hardened

Counters

Generic or Manufacturer Part #	Description	Procurement Specification	Manufacturer	Device Class or Flow	Rad-Hard Level	Notes
ACTS161	Binary Counter, 4-Bit Synchronous, Presettable, TTL-Comp.	5962F9671601#*X	HSC	V, Q	F	-
UT54ACTS163	Binary Counter, 4-Bit Synchronous, Presettable, TTL-Comp.	5962H9655501#*X	UTMC	V, Q	H	1
UT54ACTS169	Binary Counter, 4-Bit Synchronous Up/Down	5962H9656101#*X	UTMC	V, Q	H	1
UT54ACTS190	Counter, 4-Bit Up/Down BCD Decade, Synchronous	5962H9656301#*X	UTMC	V, Q	H	1
UT54ACTS191	Synchronous 4-Bit Up/Down Binary Counter	5962H9656501#*X	UTMC	V, Q	H	1
UT54ACTS193	Binary Counter, 4-Bit Synchronous Up/Down, Presettable, TTL-Comp. Inputs	5962H9656701#*X	UTMC	V, Q	H	1

NEPP Program Manager:

Chuck Barnes, Jet Propulsion Laboratory

Responsible NASA Official:

Michael Sampson, NEPAG Manager

Website Comments:

Web Development Team

Last Modified:

August 8, 2001

AETD IT Security Banner

NASA Privacy Statement

Home

|

NASA Parts Selection List (NPSL)

|

Monolithic Microcircuits

|

Digital, CMOS, Radiation Hardened (Bulk and SOS)

|

Advanced CMOS TTL Compatible (ACTS)

Radiation Hardened

Counters

| Application Notes

About NPSL

Prohibited Materials

Parts Selection Table of Contents

Capacitors

Circuit Protection Devices

Fuses

Connectors

Filters

Inductors

Microcircuits

NEW!

Monolithics

Hybrids

Resistors

Semiconductors

(Summary)

Diodes

Transistors

Thermistors

Wire and Cable

NASA Parts Selection List (NPSL)

Advanced CMOS TTL Compatible (ACTS) Radiation Hardened Counters

APPLICATION NOTES

(1) The ACS/ACTS families from Harris Semiconductor are fabricated using Silicon-on-Sapphire (SOS) technology, whereas UTMC ACS/ACTS devices are fabricated on Bulk CMOS Radiation Hardened technology.

NEPP Program Manager:

Chuck Barnes, Jet Propulsion Laboratory

Responsible NASA Official:

Michael Sampson, NEPAG Manager

Website Comments:

Web Development Team

Last Modified:

August 8, 2001

AETD IT Security Banner

NASA Privacy Statement

NASA Parts Selection List (NPSL)

|

Monolithic Microcircuits

|

Digital, CMOS, Radiation Hardened (Bulk and SOS)

|

Advanced CMOS TTL Compatible (ACTS)

Radiation Hardened Flip Flops

About NPSL

Prohibited Materials

Parts Selection Table of Contents

Capacitors

Circuit Protection Devices

Fuses

Connectors

Filters

Inductors

Microcircuits

NEW!

Monolithics

Hybrids

Resistors

Semiconductors

(Summary)

Diodes

Transistors

Thermistors

Wire and Cable

NASA Parts Selection List (NPSL)

Radiation Test:

GSFC SEU Radiation Data Bank

JPL's Radiation Data Bank

Manufacturer:

Active Supplier Assessment Program (ASAP) Core Suppliers List

Part Procurement:

Part Number/Procurement details

Application Notes:

Applicable details

Last Update:

July 1998

Advanced CMOS TTL Compatible (ACTS)

Radiation Hardened

Flip-Flops

Generic or Manufacturer Part #	Description	Procurement Specification	Manufacturer	Device Class or Flow	Rad-Hard Level	Notes
ACTS112	Flip-Flop, JK, Dual, Asynchronous Set And Clear	5962F9671401#*X	HSC	V, Q	F	-
ACTS374	Flip-Flop, D-Type, 8-Bit, 3-State Outputs, TTL-Comp. Inputs	5962F9566201#*X	HSC	V, Q	F	-
UT54ACTS74	Flip-Flop, D-Type, Dual, Reset And Clear And TTL-Comp. Inputs	5962H9653501#*X	UTMC	V, Q	H	1
UT54ACTS109	Flip-Flop, JK, Dual, Positive Edge-Triggered, TTL-Comp. Inputs	5962H9654101#*X	UTMC	V, Q	H	1
UT54ACTS273	Flip-Flop, D-Type, 4-Bit, Reset, TTL-Comp. Inputs	5962H9657901#*X	UTMC	V, Q	H	1
UT54ACTS374	Flip-Flop, D-Type, 8-Bit, 3-State Outputs, TTL-Comp. Inputs	5962H9659101#*X	UTMC	V, Q	H	1

Parts

|

Packaging

|

Radiation

|

Publications

|

Calendar

|

Experts

Admin Login

|

Request Account

|

Feedback

|

Site Map

|

Help

|

Search

NEPP Program Manager:

Chuck Barnes, Jet Propulsion Laboratory

Responsible NASA Official:

Michael Sampson, NEPAG Manager

Website Comments:

Web Development Team

Last Modified:

August 8, 2001

AETD IT Security Banner

NASA Privacy Statement

Home

|

NASA Parts Selection List (NPSL)

|

Monolithic Microcircuits

|

Digital, CMOS, Radiation Hardened (Bulk and SOS)

|

Advanced CMOS TTL Compatible (ACTS)

Radiation Hardened Flip Flops

| Application Notes

About NPSL

Prohibited Materials

Parts Selection Table of Contents

Capacitors

Circuit Protection Devices

Fuses

Connectors

Filters

Inductors

Microcircuits

NEW!

Monolithics

Hybrids

Resistors

Semiconductors

(Summary)

Diodes

Transistors

Thermistors

Wire and Cable

NASA Parts Selection List (NPSL)

Advanced CMOS TTL Compatible (ACTS)

Radiation Hardened

Flip-Flops

APPLICATION NOTES

(1) The ACS/ACTS families from Harris Semiconductor are fabricated using Silicon-on-Sapphire (SOS) technology, whereas UTMC ACS/ACTS devices are fabricated on Bulk CMOS Radiation Hardened technology.

NEPP Program Manager:

Chuck Barnes, Jet Propulsion Laboratory

Responsible NASA Official:

Michael Sampson, NEPAG Manager

Website Comments:

Web Development Team

Last Modified:

August 8, 2001

AETD IT Security Banner

NASA Privacy Statement

NASA Parts Selection List (NPSL)

Advanced CMOS TTL Compatible (ACTS)

Radiation Hardened

Gates

APPLICATION NOTES

(1) The ACS/ACTS families from Harris Semiconductor are fabricated using Silicon-on-Sapphire (SOS) technology, whereas UTMC ACS/ACTS devices are fabricated on Bulk CMOS Radiation Hardened technology.

Parts

|

Packaging

|
Radiation
|
Publications
|
Calendar
|
Experts
Admin Login
|
Request Account
|
Feedback
|
Site Map
|
Help
|
Search
NEPP Program Manager:
Chuck Barnes, Jet Propulsion Laboratory
Responsible NASA Official:
Michael Sampson, NEPAG Manager
Website Comments:
Web Development Team
Last Modified:
August 8, 2001
AETD IT Security Banner
NASA Privacy Statement

Home
|
NASA Parts Selection List (NPSL)
|
Monolithic Microcircuits
|
Digital, CMOS, Radiation Hardened (Bulk and SOS)
|
Advanced CMOS TTL Compatible (ACTS)
Radiation Hardened Gates

Advanced CMOS TTL Compatible (ACTS)

Radiation Hardened

Gates

Generic or Manufacturer Part #	Description	Procurement Specification	Manufacturer	Device Class or Flow	Rad-Hard Level	Notes
ACTS00	Nand Gate, Quad 2-Input, TTL-Compatible Inputs	5962F9563601#*X	HSC	V, Q	F	-
ACTS08	And Gate, Quad 2-Input, TTL-Comp. Inputs	5962F9565701#*X	HSC	V, Q	F	-

ACTS10	Nand Gate, Triple 3-Input, TTL-Comp. Inputs	5962F9565801#*X	HSC	V, Q	F	-
ACTS20	Nand Gate, Dual 4-Input	5962F9565901#*X	HSC	V, Q	F	-
ACTS86	Exclusive-Or Gate, Quad 2-Input, TTL-Comp. Inputs	5962F9566001#*X	HSC	V, Q	F	-
UT54ACTS00	Nand Gate, Quad 2-Input, TTL-Comp. Inputs	5962H9651301#*X	UTMC	V, Q	H	1
UT54ACTS02	Nor Gate, Quad 2-Input, TTL-Comp. Inputs	5962H9651501#*X	UTMC	V, Q	H	1
UT54ACTS08	And Gate, Quad 2-Input, TTL-Comp. Inputs	5962H9651901#*X	UTMC	V, Q	H	1
UT54ACTS10	Nand Gate, Triple 3-Input	5962H9652001#*X	UTMC	V, Q	H	1
UT54ACTS11	And Gate, Triple 3-Input, TTL-Comp. Inputs	5962H9652301#*X	UTMC	V, Q	H	1
UT54ACTS20	Nand Gate, Dual 4-Input	5962H9652701#*X	UTMC	V, Q	H	1
UT54ACTS27	Nor Gate, Triple 3-Input, TTL-Comp. Inputs	5962H9652901#*X	UTMC	V, Q	H	1
UT54ACTS54	And-Or-Invert Gate, 4-Wide 2-Input, TTL-Comp. Inputs	5962H9653301#*X	UTMC	V, Q	H	1
UT54ACTS86	Exclusive-Or Gate, Quad 2-Input, TTL-Comp. Inputs	5962H9653901#*X	UTMC	V, Q	H	1
UT54ACTS132	Nand Gate, Quad 2-Input, Schmitt Trigger, TTL-Comp. Inputs	5962H9654301#*X	UTMC	V, Q	H	1
UT54ACTS4002	Nor Gate, Dual 4-Input	5962H9659701#*X	UTMC	V, Q	H	1

NEPP Program Manager:
Chuck Barnes, Jet Propulsion Laboratory
Responsible NASA Official:
Michael Sampson, NEPAG Manager

Website Comments:
Web Development Team
Last Modified:
August 8, 2001
AETD IT Security Banner
NASA Privacy Statement

Home
|
NASA Parts Selection List (NPSL)
|
Monolithic Microcircuits
|
Digital, CMOS, Radiation Hardened (Bulk and SOS)
|
Advanced CMOS TTL Compatible (ACTS)
Radiation Hardened Latches
About NPSL
Prohibited Materials
Parts Selection Table of Contents
Capacitors
Circuit Protection Devices
Fuses
Connectors
Filters
Inductors
Microcircuits
NEW!
Monolithics
Hybrids
Resistors
Semiconductors
(Summary)
Diodes
Transistors
Thermistors
Wire and Cable
NASA Parts Selection List (NPSL)
Radiation Test:
GSFC SEU Radiation Data Bank

JPL's Radiation Data Bank

Manufacturer:

Active Supplier Assessment Program (ASAP) Core Suppliers List

Part Procurement:

Part Number/Procurement details

Application Notes:

Applicable details

Last Update:

July 1998

Advanced CMOS TTL Compatible (ACTS)

Radiation Hardened

Latches

Generic or Manufacturer Part #	Description	Procurement Specification	Manufacturer	Device Class or Flow	Rad-Hard Level	Notes
ACTS373	Latch, D-Type, 8-Bit, Transparent, 3-State Outputs, TTL-Comp. Inputs	5962F9566101#*X	HSC	V, Q	F	-
ACTS573	Latch, D-Type, 8-Bit, 3-State Outputs, TTL-Comp. Inputs	5962F9672501#*X	HSC	V, Q	F	-
UT54ACTS279	Latch, 4-Bit, TTL-Comp. Inputs	5962H9658101#*X	UTMC	V, Q	H	1
UT54ACTS373	Latch, D-Type, 8-Bit, Transparent, 3-State Outputs, TTL-Comp. Inputs	5962H9658901#*X	UTMC	V, Q	H	1

Parts

|

Packaging

|

Radiation

|

Publications

|

Calendar

|

Experts

Admin Login

|

Request Account

|

Feedback

|

Site Map

|

Help

|

Search

NEPP Program Manager:

Chuck Barnes, Jet Propulsion Laboratory

Responsible NASA Official:

Michael Sampson, NEPAG Manager

Website Comments:

Web Development Team

Last Modified:

August 8, 2001

AETD IT Security Banner

NASA Privacy Statement

Home

|

NASA Parts Selection List (NPSL)

|

Monolithic Microcircuits

|

Digital, CMOS, Radiation Hardened (Bulk and SOS)

|

Advanced CMOS TTL Compatible (ACTS)

Radiation Hardened Latches

| Application Notes

About NPSL

Prohibited Materials

Parts Selection Table of Contents

Capacitors

Circuit Protection Devices

Fuses

Connectors

Filters

Inductors

Microcircuits

NEW!

Monolithics

Hybrids

Resistors

Semiconductors

(Summary)

Diodes

Transistors

Thermistors

Wire and Cable

NASA Parts Selection List (NPSL)

Advanced CMOS TTL Compatible (ACTS)

Radiation Hardened

Latches

APPLICATION NOTES

(1) The ACS/ACTS families from Harris Semiconductor are fabricated using Silicon-on-Sapphire (SOS) technology, whereas UTMC ACS/ACTS devices are fabricated on Bulk CMOS Radiation Hardened technology.

Parts

|

Packaging

|

Radiation

|

Publications

|

Calendar

|

Experts

Admin Login

|

Request Account

|

Feedback

|

Site Map

|

Help

|

Search

NEPP Program Manager:

Chuck Barnes, Jet Propulsion Laboratory

Responsible NASA Official:

Michael Sampson, NEPAG Manager

Website Comments:

Web Development Team

Last Modified:

August 8, 2001

AETD IT Security Banner

NASA Privacy Statement

Home

|

NASA Parts Selection List (NPSL)

|

Monolithic Microcircuits

|

Digital, CMOS, Radiation Hardened (Bulk and SOS)

|

Advanced CMOS TTL Compatible (ACTS)

Radiation Hardened Multiplexers/Demux (Decoders)

About NPSL

Prohibited Materials

Parts Selection Table of Contents

Capacitors

Circuit Protection Devices

Fuses

Connectors

Filters

Inductors

Microcircuits

NEW!

Monolithics

Hybrids

Resistors

Semiconductors

(Summary)

Diodes

Transistors

Thermistors

Wire and Cable

NASA Parts Selection List (NPSL)

Radiation Test:

GSFC SEU Radiation Data Bank

JPL's Radiation Data Bank

Manufacturer:

Active Supplier Assessment Program (ASAP) Core Suppliers List

Part Procurement:

Part Number/Procurement details

Application Notes:

Applicable details

Last Update:

July 1998

Advanced CMOS TTL Compatible (ACTS)

Radiation Hardened

Multiplexers/Demux (Decoders)

Generic or Manufacturer Part #	Description	Procurement Specification	Manufacturer	Device Class or Flow	Rad-Hard Level	Notes
UT54ACTS138	Demux/Decoder, 3-8-Line	5962H9655501#*X	UTMC	V, Q	H	1
UT54ACTS139	Demux/Decoder, Dual, 2-4 Line	5962H9654701#*X	UTMC	V, Q	H	1
UT54ACTS151	Demux/Decoder, 8-Input, TTL-Comp.	5962H9654901#*X	UTMC	V, Q	H	1
UT54ACTS153	Data Sel/Mux, Dual 4-Input, TTL-Comp. Inputs	5962H9655101#*X	UTMC	V, Q	H	1
UT54ACTS157	Data Sel/Mux, Quad 2-Input, TTL-Comp. Inputs	5962H9655301#*X	UTMC	V, Q	H	1

Parts

|

Packaging

|

Radiation

|

Publications

|

Calendar

|

Experts

Admin Login

|

Request Account

|

Feedback

|

Site Map

|

Help

|

Search

NEPP Program Manager:

Chuck Barnes, Jet Propulsion Laboratory

Responsible NASA Official:

Michael Sampson, NEPAG Manager

Website Comments:

Web Development Team

Last Modified:

August 8, 2001

AETD IT Security Banner

NASA Privacy Statement

Home

|

NASA Parts Selection List (NPSL)

|

Monolithic Microcircuits

|

Digital, CMOS, Radiation Hardened (Bulk and SOS)

|

Advanced CMOS TTL Compatible (ACTS)

Radiation Hardened Multiplexers/Demux (Decoders)

| Application Notes

About NPSL

Prohibited Materials

Parts Selection Table of Contents

Capacitors

Circuit Protection Devices

Fuses

Connectors

Filters

Inductors

Microcircuits

NEW!

Monolithics

Hybrids

Resistors

Semiconductors

(Summary)

Diodes

Transistors

Thermistors

Wire and Cable

NASA Parts Selection List (NPSL)

Advanced CMOS TTL Compatible (ACTS) Radiation Hardened Multiplexers/Demux (Decoders)

APPLICATION NOTES

(1) The ACS/ACTS families from Harris Semiconductor are fabricated using Silicon-on-Sapphire (SOS) technology, whereas UTMC ACS/ACTS devices are fabricated on Bulk CMOS Radiation Hardened technology.

Parts

|

Packaging

|

Radiation

|

Publications

|

Calendar

|

Experts

Admin Login

|

Request Account

|

Feedback

|

Site Map

|

Help

|

Search

NEPP Program Manager:

Chuck Barnes, Jet Propulsion Laboratory

Responsible NASA Official:

Michael Sampson, NEPAG Manager

Website Comments:

Web Development Team

Last Modified:

August 8, 2001

AETD IT Security Banner

NASA Privacy Statement

Home

|

NASA Parts Selection List (NPSL)

|

Monolithic Microcircuits

|

Digital, CMOS, Radiation Hardened (Bulk and SOS)

|

Advanced CMOS TTL Compatible (ACTS)

Radiation Hardened

Shift Registers

About NPSL

Prohibited Materials

Parts Selection Table of Contents

Capacitors

Circuit Protection Devices

Fuses

Connectors

Filters

Inductors

Microcircuits

NEW!

Monolithics

Hybrids

Resistors

Semiconductors

(Summary)

Diodes

Transistors

Thermistors

Wire and Cable

NASA Parts Selection List (NPSL)

Radiation Test:

GSFC SEU Radiation Data Bank

JPL's Radiation Data Bank

Manufacturer:

Active Supplier Assessment Program (ASAP) Core Suppliers List

Part Procurement:

Part Number/Procurement details

Application Notes:

Applicable details

Last Update:

July 1998

Advanced CMOS TTL Compatible (ACTS)

Radiation Hardened

Shift Registers

Generic or Manufacturer Part #	Description	Procurement Specification	Manufacturer	Device Class or Flow	Rad-Hard Level	Notes
UT54ACTS164	Shift Register, 8-Bit Serial-In, Parallel-Out, TTL-Comp. Inputs	5962H9655701#*X	UTMC	V, Q	H	1
UT54ACTS165	Shift Register, 8-Bit Parallel-In, Serial-Out, LSTTL-Comp. Inputs	5962H9655901#*X	UTMC	V, Q	H	1

Parts

|

Packaging

|

Radiation

|

Publications

|

Calendar

|

Experts

Admin Login

|

Request Account

|

Feedback

|

Site Map

|

Help

|

Search

NEPP Program Manager:

Chuck Barnes, Jet Propulsion Laboratory

Responsible NASA Official:

Michael Sampson, NEPAG Manager

Website Comments:

Web Development Team

Last Modified:

August 8, 2001

AETD IT Security Banner

NASA Privacy Statement

Home

|

NASA Parts Selection List (NPSL)

|

Monolithic Microcircuits

|

Digital, CMOS, Radiation Hardened (Bulk and SOS)

|

Advanced CMOS TTL Compatible (ACTS)

Radiation Hardened

Shift Registers

| Application Notes

About NPSL

Prohibited Materials

Parts Selection Table of Contents

Capacitors

Circuit Protection Devices

Fuses

Connectors

Filters

Inductors

Microcircuits

NEW!

Monolithics

Hybrids

Resistors

Semiconductors

(Summary)

Diodes

Transistors

Thermistors

Wire and Cable

Advanced CMOS TTL Compatible (ACTS) Radiation Hardened Shift Registers

APPLICATION NOTES

(1) The ACS/ACTS families from Harris Semiconductor are fabricated using Silicon-on-Sapphire (SOS) technology, whereas UTMC ACS/ACTS devices are fabricated on Bulk CMOS Radiation Hardened technology.

NEPP Program Manager:

Chuck Barnes, Jet Propulsion Laboratory

Responsible NASA Official:

Michael Sampson, NEPAG Manager

Website Comments:

Web Development Team

Last Modified:

August 8, 2001

AETD IT Security Banner

NASA Privacy Statement

NASA Parts Selection List (NPSL)

|

Monolithic Microcircuits

|

Digital, CMOS, Radiation Hardened (Bulk and SOS)

|

Advanced CMOS TTL Compatible (ACTS)

Radiation Hardened

Transceivers

About NPSL

Prohibited Materials

Parts Selection Table of Contents

Capacitors

Circuit Protection Devices

Fuses

Connectors

Filters

Inductors

Microcircuits

NEW!

Monolithics

Hybrids

Resistors

Semiconductors

(Summary)

Diodes

Transistors

Thermistors

Wire and Cable

NASA Parts Selection List (NPSL)

Radiation Test:

GSFC SEU Radiation Data Bank

JPL's Radiation Data Bank

Manufacturer:

Active Supplier Assessment Program (ASAP) Core Suppliers List

Part Procurement:

Part Number/Procurement details

Application Notes:

Applicable details

Last Update:

July 1998

Advanced CMOS TTL Compatible (ACTS)

Radiation Hardened

Transceivers

Generic or Manufacturer Part #	Description	Procurement Specification	Manufacturer	Device Class or Flow	Rad-Hard Level	Notes
ACTS245	Bus Transceiver, 8-Bit, Bidirectional, 3-State, TTL Compatible Inputs/Outputs	5962F9671901#*X	HSC	V, Q	F	1
UT54ACTS245	Bus Transceiver, 8-Bit, Bidirectional, 3-State, TTL Compatible Inputs/Outputs	5962H9657301#*X	UTMC	V, Q	H	1

Parts

|

Packaging

|

Radiation

|

Publications

|

Calendar

|

Experts

Admin Login

|

Request Account

|

Feedback

|

Site Map

|

Help

|

Search

NEPP Program Manager:

Chuck Barnes, Jet Propulsion Laboratory

Responsible NASA Official:

Michael Sampson, NEPAG Manager

Website Comments:

Web Development Team

Last Modified:

August 8, 2001

AETD IT Security Banner

NASA Privacy Statement

Home

|

NASA Parts Selection List (NPSL)

|

Monolithic Microcircuits

|

Digital, CMOS, Radiation Hardened (Bulk and SOS)

|

Advanced CMOS TTL Compatible (ACTS)

Radiation Hardened

Transceivers

| Application Notes

About NPSL

Prohibited Materials

Parts Selection Table of Contents

Capacitors

Circuit Protection Devices

Fuses

Connectors

Filters

Inductors

Microcircuits

NEW!

Monolithics

Hybrids

Resistors

Semiconductors

(Summary)

Diodes

Transistors

Thermistors

Wire and Cable

NASA Parts Selection List (NPSL)

Advanced CMOS TTL Compatible (ACTS)

Radiation Hardened

Transceivers

APPLICATION NOTES

(1) The ACS/ACTS families from Harris Semiconductor are fabricated using Silicon-on-Sapphire (SOS) technology, whereas UTMC ACS/ACTS devices are fabricated on Bulk CMOS Radiation Hardened technology.

Parts

|

Packaging

|

Radiation

|

Publications

|

Calendar

|

Experts

Admin Login

|

Request Account

|

Feedback

|

Site Map

|

Help

|

Search

NEPP Program Manager:

Chuck Barnes, Jet Propulsion Laboratory

Responsible NASA Official:

Michael Sampson, NEPAG Manager

Website Comments:

Web Development Team

Last Modified:

August 8, 2001

AETD IT Security Banner

NASA Privacy Statement

Home

|

NASA Parts Selection List (NPSL)

|

NASA Parts Selection List (NPSL)
MICROCIRCUITS
(Monolithic)
MEMORIES
PROGRAMMABLE READ-ONLY MEMORY (PROM) (CMOS)

TYPE	TECHNOLOGY
	CMOS
PROM	X
PROM, Electrically Erasable	X

|
Calendar
|
Experts
Admin Login
|
Request Account
|
Feedback
|
Site Map
|
Help
|
Search
NEPP Program Manager:
Chuck Barnes, Jet Propulsion Laboratory
Responsible NASA Official:
Michael Sampson, NEPAG Manager
Website Comments:
Web Development Team
Last Modified:
August 8, 2001
AETD IT Security Banner
NASA Privacy Statement

Home
|
NASA Parts Selection List (NPSL)
|
Monolithic Microcircuits
|
Memories, CMOS
| PROM
About NPSL
Prohibited Materials
Parts Selection Table of Contents
Capacitors
Circuit Protection Devices
Fuses

Connectors

Filters

Inductors

Microcircuits

NEW!

Monolithics

Hybrids

Resistors

Semiconductors

(Summary)

Diodes

Transistors

Thermistors

Wire and Cable

NASA Parts Selection List (NPSL)

Radiation Test:

GSFC SEU Radiation Data Bank

JPL's Radiation Data Bank

Manufacturer:

Active Supplier Assessment Program (ASAP) Core Suppliers List

Part Procurement:

Part Number/Procurement details

Application Notes:

Applicable details

Last Update:

September 1999

MEMORIES, BIPOLAR

Programmable Read-Only Memory (PROM)

Generic or Manufacturer Part #	Description	Procurement Specification	Manufacturer	Device Class or Flow	Rad-Hard Level rads (Si) TD	Notes
82S23	32 X 8 W/ Open Collector Outputs	M38510/20701#*X	PS	B	-	
82S115	512 X 8 W/3-State Outputs	M38510/20803#*X	PS	B	-	
82S123A	32 X 8 W/3-State Outputs	M38510/20704#*X	PS	B	-	
82S126	256 X 4 W/ Open Collector	M38510/20301#*X	PS	B	-	
82S129	256 X 4 W/3-State Outputs	M38510/20302#*X	PS	B	-	
82S129A	256 X 4 W/3-State Outputs	M38510/20304#*X	PS	B	-	
82S130	512 X 4 W/ Open Collector	M38510/20401#*X	PS	B	-	
82S131	512 X 4 W/3-State Outputs	M38510/20402#*X	PS	B	-	
82S131A	512 X 4 W/3-State Outputs	M38510/20404#*X	PS	B	-	
82S137	1K X 4 W/3-State Outputs	M38510/20602#*X	AMD	B	-	
82S137A	1K X 4 W/3-State Outputs	M38510/20604#*X	PS	B	-	

82S141	512 X 8 W/3-State Outputs	M38510/20802#*X	PS	B	-	
82S181	1K X 8 W/3-State Outputs	M38510/20904#*X	PS	B	-	
82S181A	1K X 8 W/3-State Outputs	M38510/20909#*X	PS	B	-	
82S185	2K X 4 W/3-State Outputs	M38510/20902#*X	RAY	B	-	
82S185A	2K X 4 W/3-State Outputs	M38510/20910#*X	PS	B	-	
82S191	2K X 8 W/3-State Outputs	M38510/21002#*X	PS	B	-	
82S191A	2K X 8 W/3-State Outputs	M38510/21004#*X	RAY	B	-	
HS9-6617RH	2K X 8 Bit	5962R9570801V*X	HSC	V	100 K	
LMP2568C-Q45X	32K X 8, Tri-State, CMOS Input	5962R9689101Q*X	LMFS	Q	100 K	
LMP2568T-V45X	32K X 8, Tri-State	5962R9689102V*X	LMFS	V	100 K	
UT28F64T	8K X 8, Unprogrammed	5962R9687301Q*X	UTMC	Q	100 K	
UT28F256	32K X 8, Asynchr.	5962-96891#*X	UTMC	V, Q	0.5 M	

Parts

|

Packaging

|

Radiation

|

Publications

|

Calendar

|

Experts

Admin Login

|

Request Account

|

Feedback

|

Site Map

|

Help

|

Search

NEPP Program Manager:

Chuck Barnes, Jet Propulsion Laboratory

Responsible NASA Official:

Michael Sampson, NEPAG Manager

Website Comments:

Web Development Team

Last Modified:

August 8, 2001

AETD IT Security Banner

NASA Privacy Statement

Home

|

NASA Parts Selection List (NPSL)

|

Monolithic Microcircuits

|

Memories, CMOS

|

PROM, Electrically Erasable

About NPSL

Prohibited Materials

Parts Selection Table of Contents

Capacitors

Circuit Protection Devices

Fuses

Connectors

Filters

Inductors

Microcircuits

NEW!

Monolithics

Hybrids

Resistors

Semiconductors

(Summary)

Diodes

Transistors

Thermistors

Wire and Cable

NASA Parts Selection List (NPSL)

Radiation Test:

GSFC SEU Radiation Data Bank

JPL's Radiation Data Bank

Manufacturer:

Active Supplier Assessment Program (ASAP) Core Suppliers List

Part Procurement:

Part Number/Procurement details

Application Notes:

Applicable details

Last Update:

October 1999

Electrically Erasable Programmable Read Only Memory (EEPROM)

(CMOS)

Generic or Manufacturer Part #	Description	Procurement Specification	Manufacturer	Device Class or Flow	Rad-Hard Level rads (Si) TD	Notes
AS58C1001SF	128K x 8, 150 ns Access Time	5962-3826718QNA	AS	Q	-	-
AS58C1001SF	128K x 8, 200 ns Access Time	5962-3826717QNA	AS	Q	-	-
AS58C1001SF	128K x 8, 250 ns Access Time	5962-3826716QNA	AS	Q	-	-

Parts

|

Packaging

|

Radiation

|

Publications

|

Calendar

|

Experts

Admin Login

|

Request Account

|

Feedback

|

Site Map

|

Help

|

Search

NEPP Program Manager:

Chuck Barnes, Jet Propulsion Laboratory

Responsible NASA Official:

Michael Sampson, NEPAG Manager

Website Comments:

Web Development Team

Last Modified:

August 8, 2001

AETD IT Security Banner

NASA Privacy Statement

Memories, Bipolar, PROM

APPLICATION NOTES

The only remaining QPL supplier for this device will no longer be producing this device type in this grade. These parts are not recommended for new designs. Consult with the supplier for final shipment dates and/or availability information.

Home

|

NASA Parts Selection List (NPSL)

|

Monolithic Microcircuits

| Memories, CMOS - SRAM

About NPSL

Prohibited Materials

Parts Selection Table of Contents

Capacitors

Circuit Protection Devices

Fuses

Connectors

Filters

Inductors

Microcircuits

NEW!

Monolithics

Hybrids

Resistors

Semiconductors

(Summary)

Diodes

Transistors

Thermistors

Wire and Cable

NASA Parts Selection List (NPSL)

MICROCIRCUITS

(Monolithic)

TYPE	TECHNOLOGY
	CMOS
SRAM, Radiation Hardened	X

NEPP Program Manager:

Chuck Barnes, Jet Propulsion Laboratory

Responsible NASA Official:

Michael Sampson, NEPAG Manager

Website Comments:

Web Development Team

Last Modified:

August 8, 2001

AETD IT Security Banner

NASA Privacy Statement

About NPSL
Prohibited Materials
Parts Selection Table of Contents
Capacitors
Circuit Protection Devices
Fuses
Connectors
Filters
Inductors
Microcircuits
NEW!
Monolithics
Hybrids
Resistors
Semiconductors
(Summary)
Diodes
Transistors
Thermistors
Wire and Cable

NASA Parts Selection List (NPSL)

Radiation Test:	GSFC SEU Radiation Data Bank JPL's Radiation Data Bank
Manufacturer:	Active Supplier Assessment Program (ASAP) Core Suppliers List
Part Procurement:	Part Number/Procurement details
Application Notes:	Applicable details
Last Update:	October 1999

MEMORIES, CMOS

Static Random Access Memory (SRAM)

Generic or Manufacturer Part #	Description	Procurement Specification	Manufacturer	Device Class or Flow	Rad-Hard Level rads (Si) TD	Notes
2147	4096x1, 3 State Outputs	M38510/23801#*X	INTEL	B	-	-
7C147	4096x1, 35 ns	M38510/28901#*X	CYP	B	-	-
6504	4096x1, 3 State Outputs	M38510/24501#*X	INT	B	-	-
6504R	4096x1, Synch,	M38510R24503#*X	INT	S	100 K	-
6514	1024x4, 3 State Outputs	M38510/24502#*X	INT	B	-	-
6516	2kx8, 200 ns	M38510/29102#*X	INT	B	-	-
65642	8kx8, Selectable Mode	M38510/229205#*X	INT	B	-	-
6716485	8kx8, 85 ns	M38510H3829435#*X	UTMC	S	1 M	-
6716470	8kx8, 70 ns	M38510H3829436#*X	UTMC	S	1 M	-
6716455	8kx8, 55 ns	M38510H3829437#*X	UTMC	S	1 M	-
65262	16kx1, 85 ns	M38510/29103#*X	INT	B	-	-
HC6364/1X#HBT	8kx8	5962H3829438#9X	HON	V, Q	1 M	-
HC6364/1X#HBC	8kx8	5962H3829440#9X	HON	V, Q	1 M	-
HC6364/1X#HCT	8kx8	5962H3829442#9X	HON	V, Q	1 M	-
HC6364/1X#HCC	8kx8	5962H3829443#9X	HON	V, Q	1 M	-
HC6856/1W#HZC	32Kx8, 60 ns	5962H9215305#UX	HON	Q	1 M	-
HC6856/1X#HZC	32Kx8, 60 ns	5962H9215305#ZX	HON	Q	1 M	-
HC6856/1W#HZT	32Kx8, 60 ns	5962H9215306#UX	HON	Q	1 M	-
HC6856/1X#HZT	32Kx8, 60 ns	5962H9215306#ZX	HON	Q	1 M	-
HC6856/1W#HAC	32Kx8, 40 ns	5962H9215307#UX	HON	Q	1 M	-
HC6856/1X#HAC	32Kx8, 40 ns	5962H9215307#ZX	HON	Q	1 M	-
HC6856/1W#HAT	32Kx8, 40 ns	5962H9215308#UX	HON	Q	1 M	-
HC6856/1X# HAT	32Kx8, 40 ns	5962H9215308#ZX	HON	Q	1 M	-
HC6856/1W#RZC	32Kx8, 60 ns	5962R9215305#UX	HON	Q	100 K	-
HC6856/1X#RZC	32Kx8, 60 ns	5962R9215305#ZX	HON	Q	100 K	-
HC6856/1W#RZT	32Kx8, 60 ns	5962R9215306#UX	HON	Q	100 K	-
HC6856/1X#RZT	32Kx8, 60 ns	5962R9215306#ZX	HON	Q	100 K	-
HC6856/1W#RAC	32Kx8, 40 ns	5962R9215307#UX	HON	Q	100 K	-
HC6856/1X#RAC	32Kx8, 40 ns	5962R9215307#ZX	HON	Q	100 K	-
HC6856/1W#RAT	32Kx8, 40 ns	5962R9215308#UX	HON	Q	100 K	-
HC6856/1X#RAT	32Kx8, 40 ns	5962R9215308#ZX	HON	Q	100 K	-
LOR6408C-#55Y	8Kx8	5962H3829444#9C	LMFS	V, Q	1 M	-
LOR6401C-#55X	64x1, 55 ns, CMOS	5962H9215401#ZC	LMFS	V, Q	1 M	-
LOR6401C-#55G	64x1, 55 ns, CMOS	5962H9215401#YC	LMFS	V, Q	1 M	-
LOR6401C-#55X	64x1, 55 ns, TTL	5962H9215402#XC	LMFS	V, Q	1 M	-
LOR6401C-#55G	64x1, 55 ns, TTL	5962H9215402#YC	LMFS	V, Q	1 M	-
LOR2568C-#60X	32Kx8, 60 ns	5962H9215301#XC	LMFS	V, Q	1 M	-
LOR2568C-#60Y	32Kx8, 60 ns	5962H9215301#YC	LMFS	V, Q	1 M	-
LOR2568C-#60I	32Kx8, 60 ns	5962H9215301#NC	LMFS	V, Q	1 M	-
LOR2568T-#60X	32Kx8, 60 ns	5962H9215302#XC	LMFS	V, Q	1 M	-
LOR2568T-#60Y	32Kx8, 60 ns	5962H9215302#YC	LMFS	V, Q	1 M	-
LOR2568T-#60I	32Kx8, 60 ns	5962H9215302#NC	LMFS	V, Q	1 M	-
LOR2568C-#40X	32Kx8, 60 ns	5962H9215303#XC	LMFS	V, Q	1 M	-
LOR2568C-#40Y	32Kx8, 40 ns	5962H9215303#YC	LMFS	V, Q	1 M	-
LOR2568C-#40I	32Kx8, 40 ns	5962H9215303#NC	LMFS	V, Q	1 M	-
LOR2568T-#40X	32Kx8, 40 ns	5962H9215304#XC	LMFS	V, Q	1 M	-

LOR2568T-#40Y	32Kx8, 40 ns	5962H9215304#YC	LMFS	V, Q	1 M	-
LOR2568T-#40I	32Kx8, 40 ns	5962H9215304#NC	LMFS	V, Q	1 M	-
LOR2568C-#30X	32Kx8, 30 ns	5962H9215313#XC	LMFS	V, Q	1 M	-
LOR2568C-#30Y	32Kx8, 30 ns	5962H9215313#YC	LMFS	V, Q	1 M	-
LOR2568C-#30I	32Kx8, 30 ns	5962H9215313#NC	LMFS	V, Q	1 M	-
LOR2568T-#30X	32Kx8, 30 ns	5962H9215314#XC	LMFS	V, Q	1 M	-
LOR2568T-#30Y	32Kx8, 30 ns	5962H9212802#YC	LMFS	V, Q	1 M	-
LOR2568T-#30I	32Kx8, 30 ns	5962H925314#NC	LMFS	V, Q	1 M	-
LOR2561C-#60X	256Kx1, 60 ns	5962H9312801#XC	LMFS	V, Q	1 M	-
LOR2561C-#60Y	256Kx1, 60 ns	5962H9312801#YC	LMFS	V, Q	1 M	-
LOR2561C-#60I	256Kx1, 60 ns	5962H9312801#ZC	LMFS	V, Q	1 M	-
LOR2561T-#60X	256Kx1, 60 ns	5962H9312802#XC	LMFS	V, Q	1 M	-
LOR2561T-#60Y	256Kx1, 60 ns	5962H9312802#YC	LMFS	V, Q	1 M	-
LOR2561T-#60I	256Kx1, 60 ns	5962H9312802#ZC	LMFS	V, Q	1 M	-
LOR2561C-#40Y	256Kx1, 40 ns	5962H9312803#XC	LMFS	V, Q	1 M	-
LOR2561C-#40Y	256Kx1, 40 ns	5962H9312803#YC	LMFS	V, Q	1 M	-
LOR2561T-#50X	256Kx1, 50 ns	5962H9312805#XC	LMFS	V, Q	1 M	-
LOR2561T-#50Y	256Kx1, 50 ns	5962H9312805#YC	LMFS	V, Q	1 M	-
LOR2561T-#50I	256Kx1, 50 ns	5962H9312805#ZC	LMFS	V, Q	1 M	-
201A072	Dual, 256K x 8, Rad Hard	5962H99541V*X	LMFS	V	1 M	(1)
HX6356XQRC	Dual Enable, CMOS, 32Kx8	5962R9584503Q*X	HON	Q	100 K	-
HX6356XVRC	Dual Enable, CMOS, 32Kx8	5962R9584503V*X	HON	V	100 K	-

Parts

|

Packaging

|

Radiation

|

Publications

|

Calendar

|

Experts

Admin Login

|

Request Account

|

Feedback

|

Site Map

|

Help

|

Search

NEPP Program Manager:

Chuck Barnes, Jet Propulsion Laboratory

Responsible NASA Official:

Michael Sampson, NEPAG Manager

Website Comments:

Web Development Team

Last Modified:

August 8, 2001

AETD IT Security Banner

NASA Privacy Statement

Home

|

NASA Parts Selection List (NPSL)

|

Monolithic Microcircuits

|

Microprocessors and Peripherals

About NPSL

Prohibited Materials

Parts Selection Table of Contents

Capacitors

Circuit Protection Devices

Fuses

Connectors

Filters

Inductors

Microcircuits

NEW!

Monolithics

Hybrids

Resistors

Semiconductors

(Summary)

Diodes

Transistors

Thermistors

Wire and Cable

NASA Parts Selection List (NPSL)

MICROCIRCUITS

(Monolithic)

MICROPROCESSORS and PERIPHERALS

TYPE	TECHNOLOGY
	MOS
Microprocessors and Peripheral	X
Microprocessors, Rad-Hard	(under construction)

Parts

|

Packaging

|

Radiation

|

Publications

|

Calendar

|

Experts

Admin Login

|

Request Account

|

Feedback

|

Site Map

|

Help

|

Search

NEPP Program Manager:

Chuck Barnes, Jet Propulsion Laboratory

Responsible NASA Official:

Michael Sampson, NEPAG Manager

Website Comments:

Web Development Team

Last Modified:

August 8, 2001

AETD IT Security Banner

NASA Privacy Statement

Home

|

NASA Parts Selection List (NPSL)

|

Monolithic Microcircuits

|

Microprocessors and Peripherals

| Microprocessors and Peripheral

About NPSL

Prohibited Materials

Parts Selection Table of Contents

Capacitors

Circuit Protection Devices

Fuses

Connectors

Filters

Inductors

Microcircuits

NEW!

Monolithics

Hybrids

Resistors

Semiconductors

(Summary)

Diodes

Transistors

Thermistors

Wire and Cable

NASA Parts Selection List (NPSL)

Radiation Test:

GSFC SEU Radiation Data Bank

JPL's Radiation Data Bank

Manufacturer:

Active Supplier Assessment Program (ASAP) Core Suppliers List

Part Procurement:

Part Number/Procurement details

Application Notes:

Applicable details

Last Update:

October 1999

Microprocessors and Peripherals

(MOS)

Generic or Manufacturer Part #	Description	Procurement Specification	Manufacturer	Device Class or Flow	Rad-Hard Level rads (Si) TD	Notes
FLPC - #47F	Floating Point Processor	5962H9210301#*X	LMFS	V, Q	1 M&	
FXPC - #49F	Fixed Point Processor	5962-9202601#*X	LMFS	V, Q	-	
APIC - #47F	Address Processor	5962H9210401#*X	LMFS	V, Q	1 M	
IBMAP2 - #45Z	Address Processor	5962H9210601#*X	LMFS	V, Q	1 M	
MG80486DX250	32-Bit, 50 MHz Microprocessor	5962-9310503#*X	INTEL	Q	-	
MQ80486DX250	32-Bit, 50 MHz Microprocessor	5962-9310503#*X	INTEL	Q	-	
MG80486DX33	32-Bit, 33 MHz, JTAG Comp. Microprocessor	5962-9310506#*X	INTEL	Q	-	
MG80486DX266	32-Bit, 66 MHz Microprocessor	5962-9310504#*X	INTEL	Q	-	
MQ80486DX266	32-Bit, 66 MHz Microprocessor	5962-9310504#*X	INTEL	Q	-	
MG80486DX25	32-Bit, 25 MHz Microprocessor	5962-9310505#*X	INTEL	Q	-	

Parts

|

Packaging

|

Radiation

|

Publications

|

Calendar

|

Experts

Admin Login

|

Request Account

|

Feedback

|

Site Map

|

Help

|

Search

NEPP Program Manager:

Chuck Barnes, Jet Propulsion Laboratory

Responsible NASA Official:

Michael Sampson, NEPAG Manager

Website Comments:

Web Development Team

Last Modified:

August 8, 2001

AETD IT Security Banner

NASA Privacy Statement

NASA Parts Selection List (NPSL)

Microprocessor

APPLICATION NOTES

Additional preferred products may be available from these flows. Other SMD products produced to the "V" and "Q" assurance levels on these flows are also considered suitable for space applications.

NPSL

Parts Selection

Monolithic Microcircuits

Hybrids

Home

|

NASA Parts Selection List (NPSL)

|

Monolithic Microcircuits

|

Microprocessors and Peripherals

|

Microcontrollers

About NPSL

Prohibited Materials

Parts Selection Table of Contents

Capacitors

Circuit Protection Devices

Fuses

Connectors

Filters

Inductors

Microcircuits

NEW!

Monolithics

Hybrids

Resistors

Semiconductors

(Summary)

Diodes

Transistors

Thermistors

Wire and Cable

NASA Parts Selection List (NPSL)

Radiation Test:

GSFC SEU Radiation Data Bank

JPL's Radiation Data Bank

Manufacturer:

Active Supplier Assessment Program (ASAP) Core Suppliers List

Part Procurement:

Part Number/Procurement details

Application Notes:

Applicable details

Last Update:

October 1999

MICROCONTROLLERS

Generic or Manufacturer Part #	Description	Procurement Specification	Manufacturer	Device Class or Flow	Rad-Hard Level rads (Si) TD	Notes
HS8-RTX2010RH-Q	16-Bit, Rad Hard, Microcontroller	5962F9563501V*X	INT	V	300 K	-
UT69R00016WCC	16-Bit, Two Port, Rad Hard, High Performance Microcontroller	5962H9855202V*X	UTMC	V	1 M	-
UT69RH051WC	8-Bit, Rad Hard, High Performance Microcontroller	5962H9563801Q*X	UTMC	Q	1 M	-

Parts

|

Packaging

|

Radiation

|

Publications

|

Calendar

|

Experts

Admin Login

|

Request Account

|

Feedback

|

Site Map

|

Help

|

Search

NEPP Program Manager:

Chuck Barnes, Jet Propulsion Laboratory

Responsible NASA Official:

Michael Sampson, NEPAG Manager

Website Comments:

Web Development Team

Last Modified:

September 11, 2001

AETD IT Security Banner

NASA Privacy Statement

Microcontrollers

APPLICATION NOTES

Harris recently sold its semiconductor business to Intersil Corporation. All semiconductor parts previously listed under Harris are now listed as Intersil parts. The generic semiconductor part numbers and the SMD numbers used by Harris have not changed including the Cage Code.

Memories, CMOS, SRAM

APPLICATION NOTES

This LMFS Rad Hard CMOS 256K X 8 SRAM device is composed of two 128K X 8 memory die assembled in a single, double-sided ceramic substrate (Stack of two 1 MBit die). The device is available in a 40 Pin flat pack package.

Harris recently sold its semiconductor business to Intersil Corporation. All semiconductor parts previously listed under Harris are now listed as Intersil parts. The generic semiconductor part numbers and the SMD numbers used by Harris have not changed including the Cage Code.

Home

|

NASA Parts Selection List (NPSL)

|

Monolithic Microcircuits

|

Application Specific Integrated Circuits

About NPSL

Prohibited Materials

Parts Selection Table of Contents

Capacitors

Circuit Protection Devices
Fuses
Connectors
Filters
Inductors
Microcircuits
NEW!
Monolithics
Hybrids
Resistors
Semiconductors
(Summary)
Diodes
Transistors
Thermistors
Wire and Cable

NASA Parts Selection List (NPSL)
MICROCIRCUITS
(Monolithic)
Application Specific Integrated Circuits (ASICs)
Gate Arrays, CMOS

TYPE	GATES AVAILABLE
Gate Array Family	
Semicustom	15,001 - 25,000
Semicustom	45,001 - 55,000

Parts
|
Packaging
|
Radiation
|
Publications
|
Calendar
|
Experts
Admin Login

|

Request Account

|

Feedback

|

Site Map

|

Help

|

Search

NEPP Program Manager:

Chuck Barnes, Jet Propulsion Laboratory

Responsible NASA Official:

Michael Sampson, NEPAG Manager

Website Comments:

Web Development Team

Last Modified:

August 8, 2001

AETD IT Security Banner

NASA Privacy Statement

Home

|

NASA Parts Selection List (NPSL)

|

Monolithic Microcircuits

|

Application Specific Integrated Circuits

| Semicustom 15,001 - 25,000

About NPSL

Prohibited Materials

Parts Selection Table of Contents

Capacitors

Circuit Protection Devices

Fuses

Connectors

Filters

Inductors

Microcircuits

NEW!

Monolithics

Hybrids

Resistors

Semiconductors

(Summary)

Diodes

Transistors

Thermistors

Wire and Cable

NASA Parts Selection List (NPSL)

Radiation Test:

GSFC SEU Radiation Data Bank

JPL's Radiation Data Bank

Manufacturer:

Active Supplier Assessment Program (ASAP) Core Suppliers List

Part Procurement:

Part Number/Procurement details

Application Notes:

Applicable details

Last Update:

March 1998

Application Specific Integrated Circuits (ASICs)

Gate Arrays (15-25K Gates)

Generic or Manufacturer Part #	Description	Procurement Specification	Manufacturer	Device Class or Flow	Rad-Hard Level	Notes
-	15,001-25,000 Gates	M38510H60514#*X	UTMC	S, B	1M	-
-	15,001-25,000 Gates	M38510/60614#*X	UTMC	S, B	1M	-
-	15,001-25,000 Gates	M38510/60714#*X	UTMC	S, B	1M	-
-	15,001-25,000 Gates	M38510H60814#*X	UTMC	S, B	1M	-

Parts

|

Packaging

|

Radiation

|

Publications

|

Calendar

|

Experts
Admin Login
|
Request Account
|
Feedback
|
Site Map
|
Help
|
Search
NEPP Program Manager:
Chuck Barnes, Jet Propulsion Laboratory
Responsible NASA Official:
Michael Sampson, NEPAG Manager
Website Comments:
Web Development Team
Last Modified:
August 8, 2001
AETD IT Security Banner
NASA Privacy Statement

Home
|
NASA Parts Selection List (NPSL)
|
Monolithic Microcircuits
|
Application Specific Integrated Circuits
| Semicustom 45,000 - 55,000
About NPSL
Prohibited Materials
Parts Selection Table of Contents
Capacitors
Circuit Protection Devices
Fuses
Connectors
Filters
Inductors

Microcircuits

NEW!

Monolithics

Hybrids

Resistors

Semiconductors

(Summary)

Diodes

Transistors

Thermistors

Wire and Cable

NASA Parts Selection List (NPSL)

Radiation Test:

GSFC SEU Radiation Data Bank

JPL's Radiation Data Bank

Manufacturer:

Active Supplier Assessment Program (ASAP) Core Suppliers List

Part Procurement:

Part Number/Procurement details

Application Notes:

Applicable details

Last Update:

March 1998

Application Specific Integrated Circuits (ASICs)

Gate Array (45-55K Gates)

Generic or Manufacturer Part #	Description	Procurement Specification	Manufacturer	Device Class or Flow	Rad-Hard Level	Notes
-	45,001-55,000 Gates	M38510H60617#*X	UTMC	S, B	1M	-
-	45,001-55,000 Gates	M38510/60717#*X	UTMC	S, B	1M	-

Parts

|

Packaging

|

Radiation

|

Publications

|

Calendar

|
Experts
Admin Login
|
Request Account
|
Feedback
|
Site Map
|
Help
|
Search
NEPP Program Manager:
Chuck Barnes, Jet Propulsion Laboratory
Responsible NASA Official:
Michael Sampson, NEPAG Manager
Website Comments:
Web Development Team
Last Modified:
August 8, 2001
AETD IT Security Banner
NASA Privacy Statement

Home
|
NASA Parts Selection List (NPSL)
|
Monolithic Microcircuits
|
Programmable Logic Devices (PLDs) and Field Programmable Gate Arrays
About NPSL
Prohibited Materials
Parts Selection Table of Contents
Capacitors
Circuit Protection Devices
Fuses
Connectors
Filters
Inductors

Microcircuits

NEW!

Monolithics

Hybrids

Resistors

Semiconductors

(Summary)

Diodes

Transistors

Thermistors

Wire and Cable

NASA Parts Selection List (NPSL)

MICROCIRCUITS

(Monolithic)

Programmable Logic Devices (PLDs) and Field Programmable Gate Arrays (FPGAs)

TYPE	TECHNOLOGY	TECHNOLOGY
	Bipolar	CMOS
PLDs	X	
Linear Cell Arrays	X	
FPGAs	-	(Under construction)

Parts

|

Packaging

|

Radiation

|

Publications

|

Calendar

|

Experts

Admin Login

|

Request Account

|

Feedback

|

Site Map

|

Help

|

Search

NEPP Program Manager:

Chuck Barnes, Jet Propulsion Laboratory

Responsible NASA Official:

Michael Sampson, NEPAG Manager

Website Comments:

Web Development Team

Last Modified:

August 8, 2001

AETD IT Security Banner

NASA Privacy Statement

Home

|

NASA Parts Selection List (NPSL)

|

Monolithic Microcircuits

|

Programmable Logic Devices (PLDs) and Field Programmable Gate Arrays

| PLDs

About NPSL

Prohibited Materials

Parts Selection Table of Contents

Capacitors

Circuit Protection Devices

Fuses

Connectors

Filters

Inductors

Microcircuits

NEW!

Monolithics

Hybrids

Resistors

Semiconductors

(Summary)

Diodes

Transistors

Thermistors

Wire and Cable

NASA Parts Selection List (NPSL)

Radiation Test:

GSFC SEU Radiation Data Bank

JPL's Radiation Data Bank

Manufacturer:

Active Supplier Assessment Program (ASAP) Core Suppliers List

Part Procurement:

Part Number/Procurement details

Application Notes:

Applicable details

Last Update:

March 1998

Programmable Logic Devices (PLDs)

Generic or Manufacturer Part #	Description	Procurement Specification	Manufacturer	Device Class or Flow	Rad-Hard Level rads (Si) TD	Notes
16L8A	16-Input 8-Output And-Or-Invert	M38510/50401BRA	T.I.	B	-	
16R8A	16-Input 8-Output And-Or	M38510/50402BRA	T.I.	B	-	
16R6A	16-Input 6-Output And-Or	M38510/50403BRA	T.I.	B	-	
16R4A	16-Input 4-Output And-Or	M38510/50404BRA	T.I.	B	-	
16L8A-2	16-Input 8 Output And-Or-Invert	M38510/50407BRA	T.I.	B	-	
16R8A-2	16-Input 8-Output Registered And-Or	M38510/50408BRA	T.I.	B	-	
16R6A-2	16-Input 6-Output Registered And-Or	M38510/50409BRA	T.I.	B	-	
16R4A-2	16-Input 4-Output Registered And-Or	M38510/50410BRA	T.I.	B	-	
20L8-15	20-Input 8-Output And-Or-Invert	M38510/50501BLA	T.I.	B	-	
20R8-15	20-Input 8-Output Registered And-Or	M38510/50502BLA	T.I.	B	-	
20R6-15	20-Input 6-Output Registered And-Or	M38510/50503BLA	T.I.	B	-	
20R4-15	20-Input 4-Output Registered And-Or	M38510/50504BLA	T.I.	B	-	
16L8A-15	16-Input 8-Output And-Or-Invert	M38510/50601BRA	T.I.	B	-	
16R8A-15	16-Input 8-Output Registered And-Or	M38510/50602BRA	T.I.	B	-	
16R6A-15	16-Input 6-Output Registered And-Or	M38510/50603BRA	T.I.	B	-	
16R4A-15	16-Input 4-Output Registered And-Or	M38510/50604BRA	T.I.	B	-	
16L8A	16-Input 8-Output And-Or-Invert	M38510/50605BRA	T.I.	B	-	
16R8A	16-Input 8-Output Registered And-Or	M38510/50606BRA	T.I.	B	-	
16R6A	16-Input 6-Output Registered And-Or	M38510/50607BRA	T.I.	B	-	
16R4A	16-Input 4-Output Registered And-Or	M38510/50608BRA	T.I.	B	-	

Parts

|

Packaging

|
Radiation
|
Publications
|
Calendar
|
Experts
Admin Login
|
Request Account
|
Feedback
|
Site Map
|
Help
|
Search
NEPP Program Manager:
Chuck Barnes, Jet Propulsion Laboratory
Responsible NASA Official:
Michael Sampson, NEPAG Manager
Website Comments:
Web Development Team
Last Modified:
August 8, 2001
AETD IT Security Banner
NASA Privacy Statement

Home
|
NASA Parts Selection List (NPSL)
|
Monolithic Microcircuits
|
Programmable Logic Devices (PLDs) and Field Programmable Gate Arrays
|
Linear Cell Arrays
About NPSL

Prohibited Materials

Parts Selection Table of Contents

Capacitors

Circuit Protection Devices

Fuses

Connectors

Filters

Inductors

Microcircuits

NEW!

Monolithics

Hybrids

Resistors

Semiconductors

(Summary)

Diodes

Transistors

Thermistors

Wire and Cable

NASA Parts Selection List (NPSL)

Radiation Test:

GSFC SEU Radiation Data Bank

JPL's Radiation Data Bank

Manufacturer:

Active Supplier Assessment Program (ASAP) Core Suppliers List

Part Procurement:

Part Number/Procurement details

Application Notes:

Applicable details

Last Update:

March 1998

Semi-custom Linear Cell Arrays

Generic or Manufacturer Part #	Description	Procurement Specification	Manufacturer	Device Class or Flow	Rad-Hard Level rads (Si) TD	Notes
RLA80	8 Macrocell Locations	M38510/70601	RAY	B	-	
RLA120	12 Macrocell Locations	M38510/70602	RAY	B	-	
RLA160	12 Macrocell Locations	M38510/70603	RAY	B	-	

Parts

|

Packaging

|

Radiation

|

Publications

|

Calendar

|

Experts

Admin Login

|

Request Account

|

Feedback

|

Site Map

|

Help

|

Search

NEPP Program Manager:

Chuck Barnes, Jet Propulsion Laboratory

Responsible NASA Official:

Michael Sampson, NEPAG Manager

Website Comments:

Web Development Team

Last Modified:

August 8, 2001

AETD IT Security Banner

NASA Privacy Statement

Programmable Logic Devices (PLDs)

and

Field Programmable Gate Arrays (FPGAs)

APPLICATION NOTES

Additional preferred products may be available from these flows. Other SMD products produced to the "V" and "Q" assurance levels on these flows are also considered suitable for space applications.

Home

|

NASA Parts Selection List (NPSL)

|

Monolithic Microcircuits

|

Microcircuits, Linear

About NPSL

Prohibited Materials

Parts Selection Table of Contents

Capacitors

Circuit Protection Devices

Fuses

Connectors

Filters

Inductors

Microcircuits

NEW!

Monolithics

Hybrids

Resistors

Semiconductors

(Summary)

Diodes

Transistors

Thermistors

Wire and Cable

NASA Parts Selection List (NPSL)

MICROCIRCUITS

(Monolithic)

LINEAR

BIPOLAR AND CMOS

NASA Advisory NA-GSFC-2002-02

: Single Event Transients in Linear Technology Microcircuits

TYPE	TECHNOLOGY	TECHNOLOGY
	Bipolar	CMOS
Analog Mux/Demux		X
Analog Switches		X
Converters, A/D-D/A	X	
Line Receivers/Drivers	X	
OP-Amps	X	
Pulse Width Modulators	X	_
Sample and Hold Amplifier	X	

Timers	X	
Voltage Comparators	X	
Voltage Reference	X	
Voltage Regulators	X	

Parts

|

Packaging

|

Radiation

|

Publications

|

Calendar

|

Experts

Admin Login

|

Request Account

|

Feedback

|

Site Map

|

Help

|

Search

NEPP Program Manager:

Chuck Barnes, Jet Propulsion Laboratory

Responsible NASA Official:

Michael Sampson, NEPAG Manager

Website Comments:

Web Development Team

Last Modified:

July 24, 2002

AETD IT Security Banner

NASA Privacy Statement

Home

|

About NPSL
Prohibited Materials
Parts Selection Table of Contents
Capacitors
Circuit Protection Devices
Fuses
Connectors
Filters
Inductors
Microcircuits
NEW!
Monolithics
Hybrids
Resistors
Semiconductors
(Summary)
Diodes
Transistors
Thermistors
Wire and Cable

NASA Parts Selection List (NPSL)

Radiation Test:	GSFC SEU Radiation Data Bank JPL's Radiation Data Bank
Manufacturer:	Active Supplier Assessment Program (ASAP) Core Suppliers List
Part Procurement:	Part Number/Procurement details
Application Notes:	Applicable details
Last Update:	October 1999

Linear

Converters

Analog to Digital (A/D)

Generic or Manufacturer Part #	Description	Procurement Specification	Manufacturer	Device Class or Flow	Rad-Hard Level sub rads (Si) TD	Notes
AD976	16-Bit A/D, Parallel Interface	5962-9756401Q*X	ANA	Q	-	-

HS1-9008RH	8-Bit A/D, Flash	5962F9669601V*X	INT	V	300 K	-
574AT	12 Bit A/D W/ m P Interface	M38510/14002#*X	ANA	B	-	-
574AU	12 Bit A/D W/ m P Interface	M38510/14001#*X	ANA	B	-	-

Converters

Digital to Analog (D/A)

Generic or Manufacturer Part #	Description	Procurement Specification	Manufacturer	Device Class or Flow	Rad-Hard Level sub rads (Si) TD	Notes
DAC-08	8-Bit D/A, 0.19% Linearity	M38510/11301#*X	ANA, RAY	B	-	-
DAC-08A	8-Bit D/A, 0.10% Linearity	M38510/11302#*X	ANA, RAY	S	-	-
HS9-565ARH	12-Bit D/A	5962R9675501V*X	INT	V	100 K	-
561	10 Bit Binary D/A, Internal Reference	M38510/13301#*X	ANA	B	-	-
562	12 Bit D/A, External Reference	M38510/12101#*X	ANA	B	-	-
565	12 Bit D/A, Internal Reference, High Speed	M38510/12103#*X	ANA	B	-	-
7521	12 Bit D/A, W/ 10 Bit End-Point Linearity	M38510/12703#*X	ANA	B	-	-

Parts

|

Packaging

|

Radiation

|

Publications

|

Calendar

|

Experts

Admin Login

|

Request Account

|

Feedback

|

Site Map

|

Help

|

Search

NEPP Program Manager:

Chuck Barnes, Jet Propulsion Laboratory

Responsible NASA Official:

Michael Sampson, NEPAG Manager

Website Comments:

Web Development Team

Last Modified:

August 8, 2001

AETD IT Security Banner

NASA Privacy Statement

Home

|

NASA Parts Selection List (NPSL)

|

Monolithic Microcircuits

|

Microcircuits, Linear

|

Converters, A/D-D/A

| Application Notes

About NPSL

Prohibited Materials

Parts Selection Table of Contents

Capacitors

Circuit Protection Devices

Fuses

Connectors

Filters

Inductors

Microcircuits

NEW!

Monolithics

Hybrids

Resistors

Semiconductors

(Summary)

Diodes

Transistors

Thermistors

Wire and Cable

Linear, Converters

Analog to Digital (A/D) Digital to Analog (D/A)

APPLICATION NOTES

1) Harris recently sold its semiconductor business to Intersil Corporation. All semiconductor parts previously listed under Harris are now listed as Intersil parts. The generic semiconductor part numbers and the SMD numbers used by Harris have not changed including the Cage Code.

NEPP Program Manager:

Chuck Barnes, Jet Propulsion Laboratory

Responsible NASA Official:

Michael Sampson, NEPAG Manager

Website Comments:

Web Development Team

Last Modified:

August 8, 2001

AETD IT Security Banner

NASA Privacy Statement

NASA Parts Selection List (NPSL)

|

Monolithic Microcircuits

|

Microcircuits, Linear

|

Linear

CMOS

Analog Switches

About NPSL

Prohibited Materials

Parts Selection Table of Contents

Capacitors

Circuit Protection Devices

Fuses

Connectors

Filters

Inductors

Microcircuits

NEW!

Monolithics

Hybrids

Resistors

Semiconductors

(Summary)

Diodes

Transistors

Thermistors

Wire and Cable

NASA Parts Selection List (NPSL)

Radiation Test:

GSFC SEU Radiation Data Bank

JPL's Radiation Data Bank

Manufacturer:

Active Supplier Assessment Program (ASAP) Core Suppliers List

Part Procurement:

Part Number/Procurement details

Application Notes:

Applicable details

Last Update:

October 1999

Linear

CMOS

Analog Switches

Generic or Manufacturer Part #	Description	Procurement Specification	Manufacturer	Device Class or Flow	Rad-Hard Level rads (Si) TD	Notes
HS1-302RH-Q	Dual Channel, DPST, Rad Hard	5962R9581201VCX	INT	V	100 K	-
HS1-303RH-Q	Dual Channel, SPDT, Rad Hard	5962R9581301VCX	INT	V	100 K	-
181A	Dual Channel, 30 Ohm SPST	M38510/11101#*X	SIL	B	-	-
182A	Dual Channel, 75 Ohm SPST	M38510/11102#*X	SIL	B	-	-
184A	Dual Channel, 30 Ohm DPST	M38510/11103#*X	SIL	B	-	-
185A	Dual Channel, 75 Ohm DPST	M38510/11104#*X	SIL	B	-	-
187A	Single Channel, 30 Ohm SPDT	M38510/11105#*X	SIL	B	-	-
188A	Single Channel, 75 Ohm SPDT	M38510/11106#*X	SIL	B	-	-
190A	Dual Channel, 30 Ohm SPDT	M38510/11107#*X	SIL	B	-	-
191A	Dual Channel, 75 Ohm SPDT	M38510/11108#*X	SIL	B	-	-

Parts

|

Packaging

|

Radiation

|

Publications

|

Calendar

|

Experts

Admin Login

|

Request Account

|

Feedback

|

Site Map

|

Help

|

Search

NEPP Program Manager:

Chuck Barnes, Jet Propulsion Laboratory

Responsible NASA Official:

Michael Sampson, NEPAG Manager

Website Comments:

Web Development Team

Last Modified:

August 8, 2001

AETD IT Security Banner

NASA Privacy Statement

Home

|

NASA Parts Selection List (NPSL)

|

Monolithic Microcircuits

|

Microcircuits, Linear

|

Linear

CMOS

Analog Switches

| Application Notes

About NPSL

Prohibited Materials

Parts Selection Table of Contents

Capacitors

Circuit Protection Devices

Fuses

Connectors

Filters

Inductors

Microcircuits

NEW!

Monolithics

Hybrids

Resistors

Semiconductors

(Summary)

Diodes

Transistors

Thermistors

Wire and Cable

NASA Parts Selection List (NPSL)

Linear, CMOS

Analog Switches

APPLICATION NOTES

1) Harris recently sold its semiconductor business to Intersil Corporation. All semiconductor parts previously listed under Harris are now listed as Intersil parts. The generic semiconductor part numbers and the SMD numbers used by Harris have not changed including the Cage Code.

Parts

|

Packaging

|

Radiation

|

Publications

|

Calendar

|

Experts

Admin Login

|

Request Account

|

Feedback

|

Site Map

|

Help

|

Search

NEPP Program Manager:

Chuck Barnes, Jet Propulsion Laboratory

Responsible NASA Official:

Michael Sampson, NEPAG Manager

Website Comments:

Web Development Team

Last Modified:

August 8, 2001

AETD IT Security Banner

NASA Privacy Statement

Home

|

NASA Parts Selection List (NPSL)

|

Monolithic Microcircuits

|

Microcircuits, Linear

| Linear Voltage Comparators

About NPSL

Prohibited Materials

Parts Selection Table of Contents

Capacitors

Circuit Protection Devices

Fuses

Connectors

Filters

Inductors

Microcircuits

NEW!

Monolithics

Hybrids

Resistors

Semiconductors

(Summary)

Diodes

Transistors

Thermistors

Wire and Cable

NASA Parts Selection List (NPSL)

Radiation Test:

GSFC SEU Radiation Data Bank

JPL's Radiation Data Bank

Manufacturer:

Active Supplier Assessment Program (ASAP) Core Suppliers List

Part Procurement:

Part Number/Procurement details

Application Notes:

Applicable details

Last Update:

October 1999

Linear

Voltage Comparators

Generic or Manufacturer Part #	Description	Procurement Specification	Manufacturer	Device Class or Flow	Rad-Hard Level rads (Si) TD	Notes
AD9696	Single, Voltage Comp./Latch	5962-9234703V*X	ANA	V	-	-
LM119	Dual, High	5962-9679801V*X	NSC	V	-	-
LM139	Quad, Voltage Comp.	5962-8773901V*X	NSC	V	-	-
111	Precision Buffer	M38510/10304#*X	NSC,TI	S, B	-	-
119	Dual, High Speed	M38510/10306#*X	LTC, NSC	S, B	-	-
139	Quad, Single Supply, Low Power	M38510/11201#*X	NSC, TI	S, B	-	-
193	Dual, Low Power, Low Offset	M38510/11202#*X	NSC, TI	S, B	-	-
710	Single, Differential	M38510/10301#*X	NSC	B	-	-
2111	Dual Precision Voltage Comp/Buffer	M38510/10305#*X	NSC	S, B	-	-

Parts

|

Packaging

|

Radiation

|

Publications

|

Calendar

|

Experts

Admin Login

|

Request Account

|

Feedback

|

Site Map

|

Help

|

Search

NEPP Program Manager:

Chuck Barnes, Jet Propulsion Laboratory

Responsible NASA Official:

Michael Sampson, NEPAG Manager

Website Comments:

Web Development Team

Last Modified:

August 8, 2001

AETD IT Security Banner

NASA Privacy Statement

Home

|

NASA Parts Selection List (NPSL)

|

Monolithic Microcircuits

|

Microcircuits, Linear

|

Linear

Operational Amplifiers (Op-Amps)

About NPSL

Prohibited Materials

Parts Selection Table of Contents

Capacitors

Circuit Protection Devices

Fuses

Connectors

Filters

Inductors

Microcircuits

NEW!

Monolithics

Hybrids

Resistors

Semiconductors

(Summary)

Diodes

Transistors

Thermistors

Wire and Cable

NASA Parts Selection List (NPSL)

Radiation Test:

GSFC SEU Radiation Data Bank

JPL's Radiation Data Bank

Manufacturer:

Active Supplier Assessment Program (ASAP) Core Suppliers List

Part Procurement:

Part Number/Procurement details

Application Notes:

Applicable details

Last Update:

October 1999

Linear

Operational Amplifiers (Op-Amps)

Generic or Manufacturer Part #	Description	Procurement Specification	Manufacturer	Device Class or Flow	Rad-Hard Level rads (Si) TD	Notes
HS1-5104ARH-Q	Quad, Low-Noise, Rad Hard	5962R9569001V*X	INT	V	100 K	-
HS9-5104ARH-Q	Quad, Low-Noise, Rad Hard	5962R9569001V*X	INT	V	100 K	-
LM124AW	Quad, Rad Hard	5962R9950401#*X	INT	V, Q	100 K	-
LM158A	Dual, Rad Hard	5962L8771002#*X	INT	V, Q	50 K	-
LMC6464A	Quad, Low Power	5962-9560302Q*X	INT	Q	-	-
OP07	Single, Low Offset, Internally Compensated	M38510/13502#*X	LTC, ANA, RAY, NSC	B	-	-
OP07A	Single, Ultra Low Offset, Internally Compensated	M38510/13501#*X	LTC, ANA, RAY	S, B	-	-
OP27A	Single, Ultra Low Noise and Offset, Internally Compensated	M38510/13503#*X	TI	S, B	-	-
OP37AL	Low Noise, High Speed	5962-8853701V*X	ANA	V	-	-
OP43AJ	Fast, JFET	5962-9763701V*X	ANA	V	-	-
OP200AZ	Dual	5962-8859301V*X	ANA	V	-	-
OP400AY	Quad, Low Power	5962-8777101V*X	ANA	V	-	-
26C31	Dual	5962-9163901Q*X	NSC	Q	-	-
118	Precision, High-Speed	M38510/10107#*X	NSC, TI	S, B	-	-
124	Quad, Single Supply, Low Power	M38510/11005#*X	NSC, TI	S, B	-	-
148	Quad, Medium Power, Internally Compensated	M38510/11001#*X	NSC	S, B	-	-
155	JFET Input, Low Power	M38510/11401#*X	NSC	S, B	-	-
156	JFET Input, Wide Band	M38510/11402#*X	NSC	S, B	-	-
1558	Dual, Internally Compensated	M38510/10108#*X	NSC	S, B	-	-
2500	High Slew Rate, Internally Compensated, Precision	M38510/12204#*X	INT	B	-	-
2510	Single, Internally Compensated	M38510/12205#*X	INT	B	-	-
2520	Single, Internally Compensated	M38510/12206#*X	INT	B	-	-
2600	Single, High Impedance, Internally Compensated, Wide Band	M38510/12202#*X	INT	B	-	-
2620	Single, Externally Compensated,High Impedance Wide	M38510/12203#*X	INT	B	-	-
101A	Single, Externally Compensated	M38510/10103#*X	NSC, LINF	S, B	-	-
108A	Single, Externally Compensated	M38510/10104#*X	NSC, TI, MOT	S, B	-	-
155A	JFET Input, High Performance, Low Power, Low Offset	M38510/11404#*X	LTC, ANA	S, B	-	-
156A	JFET Input, High Performance Wide Band, Low Offset	M38510/11406#*X	LTC	B	-	-
157A	JFET Input, High Performance Wide Band, Low Offset	M38510/11406#*X	LTC	B	-	-
741A	Single, Internally Compensated	M38510/10101#*X	NSC	S,B	-	-
747A	Dual, Internally Compensated	M38510/10102#*X	NSC	S, B	-	-
2101A	Dual, Externally Compensated	M38510/10105#*X	LINF, RAY	B	-	-
2108A	Dual, Externally Compensated	M38510/10106#*X	RAY	S, B	-	-

Parts
|
Packaging
|
Radiation
|
Publications
|
Calendar
|
Experts
Admin Login
|
Request Account
|
Feedback
|
Site Map
|
Help
|
Search
NEPP Program Manager:
Chuck Barnes, Jet Propulsion Laboratory
Responsible NASA Official:
Michael Sampson, NEPAG Manager
Website Comments:
Web Development Team
Last Modified:

August 8, 2001
AETD IT Security Banner
NASA Privacy Statement

Home
|
NASA Parts Selection List (NPSL)
|
Monolithic Microcircuits
|

Microcircuits, Linear

|

Linear

Operational Amplifiers (Op-Amps)

| Application Notes

About NPSL

Prohibited Materials

Parts Selection Table of Contents

Capacitors

Circuit Protection Devices

Fuses

Connectors

Filters

Inductors

Microcircuits

NEW!

Monolithics

Hybrids

Resistors

Semiconductors

(Summary)

Diodes

Transistors

Thermistors

Wire and Cable

NASA Parts Selection List (NPSL)

Linear

Operational Amplifiers (Op-Amps)

APPLICATION NOTES

1) Harris recently sold its semiconductor business to Intersil Corporation. All semiconductor parts previously listed under Harris are now listed as Intersil parts. The generic semiconductor part numbers and the SMD numbers used by Harris.

Parts

|

Packaging

|

Radiation

|

Publications

|

Calendar

|
Experts
Admin Login
|
Request Account
|
Feedback
|
Site Map
|
Help
|
Search
NEPP Program Manager:
Chuck Barnes, Jet Propulsion Laboratory
Responsible NASA Official:
Michael Sampson, NEPAG Manager
Website Comments:
Web Development Team
Last Modified:

August 8, 2001
AETD IT Security Banner
NASA Privacy Statement

Home
|
About NPSL
Prohibited Materials
Parts Selection Table of Contents
Capacitors
Circuit Protection Devices
Fuses
Connectors
Filters
Inductors
Microcircuits
NEW!
Monolithics
Hybrids
Resistors

Semiconductors

(Summary)

Diodes

Transistors

Thermistors

Wire and Cable

NASA Parts Selection List (NPSL)

Radiation Test:

GSFC SEU Radiation Data Bank

JPL's Radiation Data Bank

Manufacturer:

Active Supplier Assessment Program (ASAP) Core Suppliers List

Part Procurement:

Part Number/Procurement details

Application Notes:

Applicable details

Last Update:

October 1999

Linear

Pulse-Width Modulators

Generic or Manufacturer Part #	Description	Procurement Specification	Manufacturer	Device Class or Flow	Rad-Hard Level rads (Si) TD	Notes
1524	Regulating Pulse-Width Modulator	M38510/12601#*X	LINF	S, B	-	-
1525A	Regulating Pulse-Width Modulator	M38510/12602#*X	LINF	B	-	-
1526	Regulating Pulse-Width Modulator	M38510/12603#*X	LINF	B	-	-

Parts

|

Packaging

|

Radiation

|

Publications

|

Calendar

|

Experts

Admin Login

|

Request Account

|
Feedback
|
Site Map
|
Help
|
Search
NEPP Program Manager:
Chuck Barnes, Jet Propulsion Laboratory
Responsible NASA Official:
Michael Sampson, NEPAG Manager
Website Comments:
Web Development Team
Last Modified:
August 8, 2001
AETD IT Security Banner
NASA Privacy Statement

Home
|
NASA Parts Selection List (NPSL)
|
Monolithic Microcircuits
|
Microcircuits, Linear
| Line Receivers/Drivers
About NPSL
Prohibited Materials
Parts Selection Table of Contents
Capacitors
Circuit Protection Devices
Fuses
Connectors
Filters
Inductors
Microcircuits
NEW!
Monolithics
Hybrids

Resistors

Semiconductors

(Summary)

Diodes

Transistors

Thermistors

Wire and Cable

NASA Parts Selection List (NPSL)

Radiation Test:

GSFC SEU Radiation Data Bank

JPL's Radiation Data Bank

Manufacturer:

Active Supplier Assessment Program (ASAP) Core Suppliers List

Part Procurement:

Part Number/Procurement details

Application Notes:

Applicable details

Last Update:

October 1999

Linear

Line Receivers/Drivers

Generic or Manufacturer Part #	Description	Procurement Specification	Manufacturer	Device Class or Flow	Rad-Hard Level rads (Si) TD	Notes
HS1-26C31RH-Q	Quad Differential Line Receiver	5962F9666301V	INT	V	300 K	-
HS1-26C32RH-Q	Quad Differential Line Receiver	5962F9568901V	INT	V	300 K	-
HS1-26CT31RH-Q	Quad Differential Line Receiver	5962F9563201V	INT	V	300 K	-
HS1-26CT32RH-Q	Quad Differential Line Receiver	5962F9563101V	INT	V	300 K	-
HS1-26CT31RH-8	Quad Differential Line Receiver	5962F9563201Q	INT	Q	300 K	-
HS1-26CT32RH-8	Quad Differential Line Receiver	5962F9563101Q	INT	Q	300 K	-
55107	Dual Line Receiver	M38510/10401#*X	NSC,TI	B	-	-
55108	Dual Line Receiver, Open Collector	M38510/10402#*X	NSC	B	-	-
55113	Dual Differential Line Driver, 3-State Outputs	M38510/10405#*X	TI	B	-	-
55451	Driver, Dual AND	M38510/12902#*X	TI	B	-	-
55452	Driver, Dual NAND	M38510/12903#*X	TI	B	-	-
55454	Driver, Dual NOR	M38510/12905#*X	TI	B	-	-
55462	Driver, Dual AND	M38510/12908#*X	TI	B	-	-
55463	Driver, Dual High Voltage, Medium Speed Switching	M38510/12909#*X	TI	B	-	-

Parts

|

Packaging

|
Radiation
|
Publications
|
Calendar
|
Experts
Admin Login
|
Request Account
|
Feedback
|
Site Map
|
Help
|
Search
NEPP Program Manager:
Chuck Barnes, Jet Propulsion Laboratory
Responsible NASA Official:
Michael Sampson, NEPAG Manager
Website Comments:
Web Development Team
Last Modified:

August 8, 2001
AETD IT Security Banner
NASA Privacy Statement

Home
|
NASA Parts Selection List (NPSL)
|
Monolithic Microcircuits
|
Microcircuits, Linear
|
Line Receivers/Drivers
| Application Notes

About NPSL

Prohibited Materials

Parts Selection Table of Contents

Capacitors

Circuit Protection Devices

Fuses

Connectors

Filters

Inductors

Microcircuits

NEW!

Monolithics

Hybrids

Resistors

Semiconductors

(Summary)

Diodes

Transistors

Thermistors

Wire and Cable

NASA Parts Selection List (NPSL)

Linear

Line Receivers/Drivers

APPLICATION NOTES

1) Harris recently sold its semiconductor business to Intersil Corporation. All semiconductor parts previously listed under Harris are now listed as Intersil parts. The generic semiconductor part numbers and the SMD numbers used by Harris have not changed including the Cage Code.

Parts

|

Packaging

|

Radiation

|

Publications

|

Calendar

|

Experts

Admin Login

|

Request Account

|
Feedback
|
Site Map
|
Help
|
Search
NEPP Program Manager:
Chuck Barnes, Jet Propulsion Laboratory
Responsible NASA Official:
Michael Sampson, NEPAG Manager
Website Comments:
Web Development Team
Last Modified:
August 8, 2001
AETD IT Security Banner
NASA Privacy Statement

Home
|
NASA Parts Selection List (NPSL)
|
Monolithic Microcircuits
|
Microcircuits, Linear
| Linear Sample and Hold Amplifier
About NPSL
Prohibited Materials
Parts Selection Table of Contents
Capacitors
Circuit Protection Devices
Fuses
Connectors
Filters
Inductors
Microcircuits
NEW!
Monolithics
Hybrids

Resistors

Semiconductors

(Summary)

Diodes

Transistors

Thermistors

Wire and Cable

NASA Parts Selection List (NPSL)

Radiation Test:

GSFC SEU Radiation Data Bank

JPL's Radiation Data Bank

Manufacturer:

Active Supplier Assessment Program (ASAP) Core Suppliers List

Part Procurement:

Part Number/Procurement details

Application Notes:

Applicable details

Last Update:

March 1998

Linear

Sample and Hold Amplifier

Generic or Manufacturer Part #	Description	Procurement Specification	Manufacturer	Device Class or Flow	Rad-Hard Level rads (Si) TD	Notes
198	Sample and Hold, 10K	M38510/12501#*X	LTC, NSC	S, B	-	-

Parts

|

Packaging

|

Radiation

|

Publications

|

Calendar

|

Experts

Admin Login

|

Request Account

|

Feedback

|

Site Map

|

Help

|

Search

NEPP Program Manager:

Chuck Barnes, Jet Propulsion Laboratory

Responsible NASA Official:

Michael Sampson, NEPAG Manager

Website Comments:

Web Development Team

Last Modified:

August 8, 2001

AETD IT Security Banner

NASA Privacy Statement

Home

|

NASA Parts Selection List (NPSL)

|

Monolithic Microcircuits

|

Microcircuits, Linear

| Linear Timers

About NPSL

Prohibited Materials

Parts Selection Table of Contents

Capacitors

Circuit Protection Devices

Fuses

Connectors

Filters

Inductors

Microcircuits

NEW!

Monolithics

Hybrids

Resistors

Semiconductors

(Summary)

Diodes

Transistors

Thermistors

Wire and Cable

NASA Parts Selection List (NPSL)

Radiation Test:

GSFC SEU Radiation Data Bank

JPL's Radiation Data Bank

Manufacturer:

Active Supplier Assessment Program (ASAP) Core Suppliers List

Part Procurement:

Part Number/Procurement details

Application Notes:

Applicable details

Last Update:

March 1998

Linear

Timers

Generic or Manufacturer Part #	Description	Procurement Specification	Manufacturer	Device Class or Flow	Rad-Hard Level rads (Si) TD	Notes
555	Timer, Single, Precision	M38510/10901#*X	NSC,TI	S, B	-	-
556	Timer, Dual, Precision	M38510/10902#*X	TI	B	-	-

Parts

|

Packaging

|

Radiation

|

Publications

|

Calendar

|

Experts

Admin Login

|

Request Account

|

Feedback

|

Site Map

|

Help

|

Search

NEPP Program Manager:

Chuck Barnes, Jet Propulsion Laboratory

Responsible NASA Official:

Michael Sampson, NEPAG Manager

Website Comments:

Web Development Team

Last Modified:

August 8, 2001

AETD IT Security Banner

NASA Privacy Statement

Home

|

NASA Parts Selection List (NPSL)

|

About NPSL

Prohibited Materials

Parts Selection Table of Contents

Capacitors

Circuit Protection Devices

Fuses

Connectors

Filters

Inductors

Microcircuits

NEW!

Monolithics

Hybrids

Resistors

Semiconductors

(Summary)

Diodes

Transistors

Thermistors

Wire and Cable

NASA Parts Selection List (NPSL)

Radiation Test:

GSFC SEU Radiation Data Bank

JPL's Radiation Data Bank

Manufacturer:

Active Supplier Assessment Program (ASAP) Core Suppliers List

Part Procurement:

Part Number/Procurement details

Application Notes:

Applicable details

Last Update:

September 1999

Linear

Transceivers

Generic or Manufacturer Part #	Description	Procurement Specification	Manufacturer	Device Class or Flow	Rad-Hard Level rads (Si) TD	Notes
UT63M-147	Digital, Dual Channel, Bus Transceiver	5962H9322603Q*X	UTMC	Q	1 M	-

Parts

|

Packaging

|

Radiation

|

Publications

|

Calendar

|

Experts

Admin Login

|

Request Account

|

Feedback

|

Site Map

|

Help

|

Search

NEPP Program Manager:

Chuck Barnes, Jet Propulsion Laboratory

Responsible NASA Official:

Michael Sampson, NEPAG Manager

Website Comments:

Web Development Team

Last Modified:

July 23, 2002

AETD IT Security Banner

NASA Privacy Statement

Home

|

NASA Parts Selection List (NPSL)

|

Monolithic Microcircuits

|

Microcircuits, Linear

| Linear Voltage Reference

About NPSL

Prohibited Materials

Parts Selection Table of Contents

Capacitors

Circuit Protection Devices

Fuses

Connectors

Filters

Inductors

Microcircuits

NEW!

Monolithics

Hybrids

Resistors

Semiconductors

(Summary)

Diodes

Transistors

Thermistors

Wire and Cable

NASA Parts Selection List (NPSL)

Radiation Test:

GSFC SEU Radiation Data Bank

JPL's Radiation Data Bank

Manufacturer:

Active Supplier Assessment Program (ASAP) Core Suppliers List

Part Procurement:

Part Number/Procurement details

Application Notes:

Applicable details

Last Update:

October 1999

Linear

Voltage Reference

Generic or Manufacturer Part #	Description	Procurement Specification	Manufacturer	Device Class or Flow	Rad-Hard Level rads (Si) TD	Notes
HS9-REF05RH-Q	Voltage Reference, Temperature Compensated	5962-96A0301VRX	INT	V	-	-

Parts

|

Packaging

|

Radiation

|

Publications

|

Calendar

|

Experts

Admin Login

|

Request Account

|

Feedback

|

Site Map

|

Help

|

Search

NEPP Program Manager:

Chuck Barnes, Jet Propulsion Laboratory

Responsible NASA Official:

Michael Sampson, NEPAG Manager

Website Comments:

Web Development Team

Last Modified:

August 8, 2001

AETD IT Security Banner

NASA Privacy Statement

Home

|

NASA Parts Selection List (NPSL)

|

Monolithic Microcircuits

|

Microcircuits, Linear

| Linear Voltage Regulators

About NPSL

Prohibited Materials

Parts Selection Table of Contents

Capacitors

Circuit Protection Devices

Fuses

Connectors

Filters

Inductors

Microcircuits

NEW!

Monolithics

Hybrids

Resistors

Semiconductors

(Summary)

Diodes

Transistors

Thermistors

Wire and Cable

NASA Parts Selection List (NPSL)

Radiation Test:

GSFC SEU Radiation Data Bank

JPL's Radiation Data Bank

Manufacturer:

Active Supplier Assessment Program (ASAP) Core Suppliers List

Part Procurement:

Part Number/Procurement details

Application Notes:

Applicable details

Last Update:

October 1999

Linear

Voltage Regulators

Generic or Manufacturer Part #	Description	Procurement Specification	Manufacturer	Device Class or Flow	Rad-Hard Level rads (Si) TD	Notes
109	5-Volt Positive Regulator, 1.5 A	M38510/10701#*X	LINF, NSC	S, B	-	-
117H	3-Terminal Adjustable Regulator, 0.5 A	M38510/11703#*X	NSC, LINF	S, B	-	-
117K	3-Terminal Adjustable Regulator, 1.5 A	M38510/11704#*X	LINF, NSC	S, B	-	-
120H-05	5-Volt Negative Voltage Regulator, 0.5 A	M38510/11501#*X	NSC, LINF	S, B	-	-
120H-12	12-Volt Negative Voltage Regulator, 0.5 A	M38510/11502#*X	NSC, LINF	S, B	-	-
120H-15	15-Volt Negative Voltage Regulator, 0.5 A	M38510/11503#*X	NSC, LINF	S, B	-	-
120K-05	5-Volt Negative Voltage Regulator, 1.0 A	M38510/11505#*X	NSC, LINF	S, B	-	-
120K-12	12-Volt Negative Voltage Regulator, 1.0 A	M38510/11506#*X	NSC, LINF	S, B	-	-
120K-15	15-Volt Negative Voltage Regulator, 1.0 A	M38510/11507#*X	NSC, LINF	S, B	-	-
137H	3 Terminal Adjustable Regulator, 0.5 A	M38510/11803#*X	NSC	S, B	-	-
137K	3 Terminal Adjustable Regulator, 1.5 A	M38510/11804#*X	NSC, LINF	S, B	-	-
140K-05	5-Volt Positive Voltage Regulator, 1.0 A	M38510/10706#*X	NSC, LINF	S, B	-	-
140K-12	12-Volt Positive Voltage Regulator, 1.0 A	M38510/10707#*X	NSC, LINF	S, B	-	-
140K-15	15-Volt Positive Voltage Regulator, 1.0 A	M38510/10708#*X	NSC, LINF	S, B	-	-
140K-24	24-Volt Positive Voltage Regulator, 1.0 A	M38510/10709#*X	NSC	S, B	-	-
78M05	5-Volt Positive Voltage Regulator, 0.5 A	M38510/10702#*X	LINF, NSC	S, B	-	-
78M12	12-Volt Positive Voltage Regulator, 0.5 A	M38510/10703#*X	LINF, NSC	S, B	-	-
78M15	15-Volt Positive Voltage Regulator, 0.5 A	M38510/10704#*X	NSC	S, B	-	-

Parts

|

Packaging

|

Radiation

|

Publications
|
Calendar
|
Experts
Admin Login
|
Request Account
|
Feedback
|
Site Map
|
Help
|
Search
NEPP Program Manager:
Chuck Barnes, Jet Propulsion Laboratory
Responsible NASA Official:
Michael Sampson, NEPAG Manager
Website Comments:
Web Development Team
Last Modified:

August 8, 2001
AETD IT Security Banner
NASA Privacy Statement

Home
|
NASA Parts Selection List (NPSL)
|
Monolithic Microcircuits
|
Microcircuits, Linear
|
Linear Voltage Reference
| Application Notes
About NPSL
Prohibited Materials
Parts Selection Table of Contents

Capacitors

Circuit Protection Devices

Fuses

Connectors

Filters

Inductors

Microcircuits

NEW!

Monolithics

Hybrids

Resistors

Semiconductors

(Summary)

Diodes

Transistors

Thermistors

Wire and Cable

NASA Parts Selection List (NPSL)

Linear

Voltage Reference

APPLICATION NOTES

1) Harris recently sold its semiconductor business to Intersil Corporation. All semiconductor parts previously listed under Harris are now listed as Intersil parts. The generic semiconductor part numbers and the SMD numbers used by Harris have not changed including the Cage Code.

Parts

|

Packaging

|

Radiation

|

Publications

|

Calendar

|

Experts

Admin Login

|

Request Account

|

Feedback

|

Site Map

|

Help

|

Search

NEPP Program Manager:

Chuck Barnes, Jet Propulsion Laboratory

Responsible NASA Official:

Michael Sampson, NEPAG Manager

Website Comments:

Web Development Team

Last Modified:

August 8, 2001

AETD IT Security Banner

NASA Privacy Statement

Home

|

NASA Parts Selection List (NPSL)

|

Monolithic Microcircuits

|

Microcircuits, Linear

| Linear CMOS Multiplexer/Demultiplexer

About NPSL

Prohibited Materials

Parts Selection Table of Contents

Capacitors

Circuit Protection Devices

Fuses

Connectors

Filters

Inductors

Microcircuits

NEW!

Monolithics

Hybrids

Resistors

Semiconductors

(Summary)

Diodes

Transistors

Thermistors

Wire and Cable

NASA Parts Selection List (NPSL)

Radiation Test:

GSFC SEU Radiation Data Bank

JPL's Radiation Data Bank

Manufacturer:

Active Supplier Assessment Program (ASAP) Core Suppliers List

Part Procurement:

Part Number/Procurement details

Application Notes:

Applicable details

Last Update:

October 1999

Linear

CMOS

Multiplexer/Demultiplexer

Generic or Manufacturer Part #	Description	Procurement Specification	Manufacturer	Device Class or Flow	Rad-Hard Level rads (Si) TD	Notes
HS1-508ARH	Mux/Demux, 8-Ch	5962R9674201V*X	INT	V	100 K	-
HS9-1840RH	Mux, 16 to 1	5962R9563001V*X	INT	V	100 K	-
506	Mux, 16-CH	M38510/11101#*X	SIL	B	-	-
507	Mux, Diff., 8-Ch	M38510/11103#*X	SIL	B	-	-
508	Mux/Demux, 8-Ch	M38510/11105#*X	SIL	B	-	-
509	Mux/Demux, 4-Ch	M38510/11107#*X	SIL	B	-	-
506A	Mux/Demux, 16 Ch	M38510/11102#*X	SIL	B	-	-
507A	Mux/Demux, 8-Ch	M38510/11104#*X	SIL	B	-	-
508A	Mux/Demux, 8-Ch	M38510/11106#*X	SIL	B	-	-
509A	Mux/Demux, Diff., 8-Ch	M38510/11108#*X	SIL	B	-	-

Parts

|

Packaging

|

Radiation

|

Publications

|

Calendar

|
Experts
Admin Login
|
Request Account
|
Feedback
|
Site Map
|
Help
|
Search
NEPP Program Manager:
Chuck Barnes, Jet Propulsion Laboratory
Responsible NASA Official:
Michael Sampson, NEPAG Manager
Website Comments:
Web Development Team
Last Modified:
August 8, 2001
AETD IT Security Banner
NASA Privacy Statement

Home
|
NASA Parts Selection List (NPSL)
|
Monolithic Microcircuits
|
Microcircuits, Linear
|
Linear CMOS Multiplexer/Demultiplexer
| Application Notes
About NPSL
Prohibited Materials
Parts Selection Table of Contents
Capacitors
Circuit Protection Devices
Fuses

Connectors

Filters

Inductors

Microcircuits

NEW!

Monolithics

Hybrids

Resistors

Semiconductors

(Summary)

Diodes

Transistors

Thermistors

Wire and Cable

NASA Parts Selection List (NPSL)

Linear, CMOS

Multiplexer/Demultiplexer

APPLICATION NOTES

1) Harris recently sold its semiconductor business to Intersil Corporation. All semiconductor parts previously listed under Harris are now listed as Intersil parts. The generic semiconductor part numbers and the SMD numbers used by Harris have not changed including the Cage Code.

Parts

|

Packaging

|

Radiation

|

Publications

|

Calendar

|

Experts

Admin Login

|

Request Account

|

Feedback

|

Site Map

|

Help

|

Search

NEPP Program Manager:

Chuck Barnes, Jet Propulsion Laboratory

Responsible NASA Official:

Michael Sampson, NEPAG Manager

Website Comments:

Web Development Team

Last Modified:

August 8, 2001

AETD IT Security Banner

NASA Privacy Statement

Home

|

NASA Parts Selection List (NPSL)

|

Monolithic Microcircuits

|

Microcircuits, Linear

| Interface/Bus Controllers

About NPSL

Prohibited Materials

Parts Selection Table of Contents

Capacitors

Circuit Protection Devices

Fuses

Connectors

Filters

Inductors

Microcircuits

NEW!

Monolithics

Hybrids

Resistors

Semiconductors

(Summary)

Diodes

Transistors

Thermistors

Wire and Cable

NASA Parts Selection List (NPSL)

Radiation Test:

GSFC SEU Radiation Data Bank

JPL's Radiation Data Bank

Manufacturer:

Active Supplier Assessment Program (ASAP) Core Suppliers List

Part Procurement:

Part Number/Procurement details

Application Notes:

Applicable details

Last Update:

October 1999

Interface/Bus Controllers

Generic or Manufacturer Part #	Description	Procurement Specification	Manufacturer	Device Class or Flow	Rad-Hard Level rads (Si) TD	Notes
UT63M-147	Digital, Dual Channel, Bus Transceiver	5962H9322603Q*X	UTMC	Q	1 M	-
UT1553B-BCRTV	Bus Controller, Remote Control	5962H8862801V*X	UTMC	V	1 M	-
UT69151EWB	Serial, Micro-coded, Multi-mode, Intelligent Terminal	5962R9211802V*X	UTMC	V	100 K	-

NPSL Home Page

Parts Selection

Monolithic Microcircuits

Hybrids

Parts

|

Packaging

|

Radiation

|

Publications

|

Calendar

|

Experts

Admin Login

|

Request Account

|

Feedback
|
Site Map
|
Help
|
Search
NEPP Program Manager:
Chuck Barnes, Jet Propulsion Laboratory
Responsible NASA Official:
Michael Sampson, NEPAG Manager
Website Comments:
Web Development Team
Last Modified:
August 8, 2001
AETD IT Security Banner
NASA Privacy Statement

Home
|
NASA Parts Selection List (NPSL)
|
Monolithic Microcircuits
|
Microcircuits, Linear
|
High Speed CMOS (HC), Digital
(Older Technology Parts)
About NPSL
Prohibited Materials
Parts Selection Table of Contents
Capacitors
Circuit Protection Devices
Fuses
Connectors
Filters
Inductors
Microcircuits
NEW!
Monolithics

Hybrids

Resistors

Semiconductors

(Summary)

Diodes

Transistors

Thermistors

Wire and Cable

NASA Parts Selection List (NPSL)

Radiation Test:

GSFC SEU Radiation Data Bank

JPL's Radiation Data Bank

Manufacturer:

Active Supplier Assessment Program (ASAP) Core Suppliers List

Part Procurement:

Part Number/Procurement details

Application Notes:

Applicable details

Last Update:

April 1997

High Speed CMOS (HC), Digital

(Older Technology Parts)

Generic or Manufacturer Part #	Description	Procurement Specification	Manufacturer	Device Class or Flow	Rad Hard Level	Notes
54HC00	Gate, NAND, Quad 2 Input	M38510/65001#*X	TI	B	-	-
54HC02	Gate, NOR, Quad 2 Input	M38510/65101#*X	TI	B	-	-
54HC04	Gate, HEX Inverter	M38510/65701#*X	TI	B	-	--
54HC08	Gate, AND, Quad 2 Input	M38510/65203#*X	TI	B	-	-
54HC10	Gate, NAND, Triple 3 Input	M38510/65002#*X	TI	B	-	-
54HC11	Gate, AND, Triple 3 Input	M38510/65204#*X	TI	B	-	-
54HC14	Gate, Hex Invert, Schmitt Trigger	M38510/65702#*X	TI	B	-	-
54HC20	Gate, NAND, Dual 4 Input	M38510/65003#*X	TI	B	-	-
54HC27	Gate, NOR, Triple 3 Input	M38510/65102#*X	TI	B	-	-
54HC30	Gate, NAND, 8 Input	M38510/65004#*X	TI	B	-	-
54HC32	Gate, OR, Quad 2 Input	M38510/65201#*X	TI	B	-	-
54HC74	Counter, Dual D, Positive Edge Trigger. W/Clear And Preset	M38510/65302#*X	TI	B	-	-
54HC86	Gate, XOR, Quad 2 Input	M38510/65202#*X	TI	B	-	-
54HC109	Counter, Dual J-K, + Edge Trigger. W/Clear And Preset	M38510/65304#*X	TI	B	-	-
54HC112	Counter, Dual J-K, - Edge Trigger. W/Clear And Preset	M38510/65305#*X	TI	B	-	-
54HC138	Decoder/MUX, 3-To-8 Line Decoder	M38510/65802#*X	TI	B	-	-
54HC139	Decoder/MUX, Dual 2-To-4 Line Decoder	M38510/65803#*X	TI	B	-	-

54HC158	Decoder/MUX, Quad 2-Input Data Select/MUX	M38510/66204#*X	TI	B	-	-
54HC161	Gate, 4-Bit Binary Control, Async. Reset, Sync. Load	M38510/66302#*X	TI	B	-	-
54HC163	Counter, 4-Bit Binary Control, Sync. Reset And Load	M38510/66304#*X	TI	B	-	-
54HC164	Register, 8-Bit Parallel-Out Shift Register.	M38510/66501#*X	TI	B	-	-
54HC165	Register, 8-Bit Parallel-In Shift Register.	M38510/66502#*X	TI	B	-	-
54HC173	Counter, Quad D-Type W/ 3-St Outputs And Clear	M38510/65306#*X	TI	B	-	-
54HC174	Counter, Hex D-Flip-Flop W/ Clear	M38510/65307#*X	TI	B	-	-
54HC175	Flip-Flop, Quad D-Flip-Flop W/ Clear	M38510/65308#*X	TI	B	-	-
54HC240	Buffer, Octal Invert Buff W/ 3-State Outputs	M38510/65703#*X	TI	B	-	-
54HC241	Buffer, Octal Buff W/ 3-State Outputs	M38510/65704#*X	TI	B	-	-
54HC244	Gate, Octal Non-Inv. Buff W/3-State Buffer	M38510/65705#*X	TI	B	-	-
54HC245	Transceiver, Octal Noninv., W/ 3-State Outputs	M38510/65503#*X	TI	B	-	--
54HC259	Latch, 8 Bit Addressable Latch	M38510/65402#*X	TI	B	-	-
54HC273	Flip-Flop, Octal D-Type W/ Dir. Clear Input	M38510/65601#*X	TI	B	-	-
54HC365	Driver, Hex Bus Driver W/ 3-St Outputs	M38510/65706#*X	TI	B	-	-
54HC367	Driver, Hex Bus Driver W/ 3-St Outputs	M38510/65708#*X	TI	B	-	-
54HC368	Driver, Hex Inv Bus Driver W/ 3-St Outputs	M38510/65709#*X	TI	B	-	-
54HC373	Latch, Octal D-Type W/ 3 State Outputs	M38510/65403#*X	TI	B	-	-
54HC374	Flip-Flop, Octal D-Type W/ 3-St Outputs	M38510/65602#*X	TI	B	-	-
54HC393	Counter, Dual 4-Bit Sync. Binarycontrol, Async. Reset	M38510/66309#*X	TI	B	-	-
54HC540	Driver, Octal Inv Bus Driver W/ 3-St Outputs	M38510/65710#*X	TI	B	-	-
54HC541	Driver, Octal Noninv. W/ 3-State Outputs	M38510/65711#*X	TI	B	-	-
54HC573	Latch, Octal D-Type W/ 3-St Outputs	M38510/65406#*X	TI	B	-	-
54HC574	Flip-Flop, Octal D-Type W/ 3-State Outputs	M38510/65604#*X	TI	B	-	-
54HC4002	Gate, NOR, Dual 4-Input	M38510/65104#*X	TI	B	-	-

Site Map

|

Help

|

Search

NEPP Program Manager:

Chuck Barnes, Jet Propulsion Laboratory

Responsible NASA Official:

Michael Sampson, NEPAG Manager

Website Comments:

Web Development Team

Last Modified:

August 8, 2001

AETD IT Security Banner

NASA Privacy Statement

Home

|

NASA Parts Selection List (NPSL)

|

Monolithic Microcircuits

|

Microcircuits, Linear

|

High Speed CMOS (HC), Digital

(Older Technology Parts)

| Application Notes

About NPSL

Prohibited Materials

Parts Selection Table of Contents

Capacitors

Circuit Protection Devices

Fuses

Connectors

Filters

Inductors

Microcircuits

NEW!

Monolithics

Hybrids

Resistors

Semiconductors

(Summary)

Diodes

Transistors

Thermistors

Wire and Cable

NASA Parts Selection List (NPSL)

CMOS, Digital, High speed (Older Technology Parts)

APPLICATION NOTES

The HC technology has been shown to be vulnerable to total dose radiation levels as low as 3 Krads. DC parametric specification limits were exceeded after radiation exposure as low as 3 Krads and functional failures occurred at levels as low as 20 Krads. Lot by lot radiation testing is recommended.

The only remaining QPL supplier for this device will no longer be producing this device type in this grade. These parts are not recommended for new designs. Consult with the supplier for final shipment dates and/or availability information.

Parts

|

Packaging

|

Radiation

|

Publications

|

Calendar

|

Experts

Admin Login

|

Request Account

|

Feedback

|

Site Map

|

Help

|

Search

NEPP Program Manager:

Chuck Barnes, Jet Propulsion Laboratory

Responsible NASA Official:

Michael Sampson, NEPAG Manager

Website Comments:

Web Development Team

Last Modified:

August 8, 2001

AETD IT Security Banner

NASA Privacy Statement

Home

|

NASA Parts Selection List (NPSL)

|

Monolithic Microcircuits

|

Microcircuits, Linear

|

High Speed CMOS, TTL Compatible (HCT), Digital,

(Older Technology Parts)

About NPSL

Prohibited Materials

Parts Selection Table of Contents

Capacitors

Circuit Protection Devices

Fuses

Connectors

Filters

Inductors

Microcircuits

NEW!

Monolithics

Hybrids

Resistors

Semiconductors

(Summary)

Diodes

Transistors

Thermistors

Wire and Cable

NASA Parts Selection List (NPSL)

Radiation Test:	GSFC SEU Radiation Data Bank JPL's Radiation Data Bank
Manufacturer:	Active Supplier Assessment Program (ASAP) Core Suppliers List
Part Procurement:	Part Number/Procurement details
Application Notes:	Applicable details
Last Update:	April 1997

High Speed CMOS, TTL Compatible (HCT), Digital,
(Older Technology Parts)

Generic or Manufacturer Part #	Description	Procurement Specification	Manufacturer	Device Class or Flow	Rad-Hard Level	Notes
54HCT04	Gate, Hex Inverter	M38510/65751#*X	TI	B	-	-
54HCT74	Flip-Flop, Dual D-Type	M38510/65352#*X	TI	B	-	-
54HCT138	Decoder, 3 To 8 Line Decoder	M38510/65852#*X	TI	B	-	-
54HCT240	Buff, Invert Octal 3-St Buffer	M38510/65753#*X	TI	B	-	-
54HCT244	Buff, Octal Buff W/ 3-State Outputs	M38510/65755#*X	TI	B	-	-
54HCT245	Bus Xceiver, Octal Non-Invert W/3 State Outputs	M38510/65553#*X	TI	B	-	-
54HCT373	Flip-Flop, Octal D-Type W/3-State Outputs	M38510/65453#*X	TI	B	-	-
54HCT374	Flip-Flop, Octal D-Type W/3-State Outputs	M38510/65652#*X	TI	B	-	-
54HCT540	Buff, Octal Inv Bus Driver W/ 3-State Outputs	M38510/65760#*X	TI	B	-	-
54HCT541	Buffer, Octal Noninvert. Bus Driver W/3-State Outputs	M38510/65761#*X	TI	B	-	-

|

Search

NEPP Program Manager:

Chuck Barnes, Jet Propulsion Laboratory

Responsible NASA Official:

Michael Sampson, NEPAG Manager

Website Comments:

Web Development Team

Last Modified:

August 8, 2001

AETD IT Security Banner

NASA Privacy Statement

Home

|

NASA Parts Selection List (NPSL)

|

Monolithic Microcircuits

|

Microcircuits, Linear

|

High Speed CMOS, TTL Compatible (HCT), Digital,

(Older Technology Parts)

| Application Notes

About NPSL

Prohibited Materials

Parts Selection Table of Contents

Capacitors

Circuit Protection Devices

Fuses

Connectors

Filters

Inductors

Microcircuits

NEW!

Monolithics

Hybrids

Resistors

Semiconductors

(Summary)

Diodes

Transistors

Thermistors

Wire and Cable

NASA Parts Selection List (NPSL)

CMOS, Digital, High speed, TTL Compatible (Older Technology Parts)

APPLICATION NOTES

The HC technology has been shown to be vulnerable to total dose radiation levels as low as 3 Krads. DC parametric specification limits were exceeded after radiation exposure as low as 3 Krads and functional failures occurred at levels as low as 20 Krads. Lot by lot radiation testing is recommended.

The only remaining QPL supplier for this device will no longer be producing this device type in this grade. These parts are not recommended for new designs. Consult with the supplier for final shipment dates and/or availability information.

Parts

|

Packaging

|

Radiation

|

Publications

|

Calendar

|

Experts

Admin Login

|

Request Account

|

Feedback

|

Site Map

|

Help

|

Search

NEPP Program Manager:

Chuck Barnes, Jet Propulsion Laboratory

Responsible NASA Official:

Michael Sampson, NEPAG Manager

Website Comments:

Web Development Team

Last Modified:

August 8, 2001

AETD IT Security Banner

NASA Privacy Statement

Monolithic and Hybrid Microcircuit Manufacturer Listing

Listed below are links to manufacturer data sites that may provide additional part related information. The linked sites are not under the control of NPSL and NASA is not responsible for information contained in the linked site. We are providing these links for your convenience only.

ACT

Actel Corporation

East Arques Avenue

Sunnyvale, CA 94086-4533

Cage Code: 0J4Z0

Phone No: (408) 522-4584

AMD

Advanced Micro Devices

901 Thompson Pl.

Sunnyvale, CA 94086-3453

Cage Code: 34335

Phone No: (408) 732-2400

ANA

Analog Devices

804 Wilburn Street

Wilmington, MA 01887

Cage Code: 51640

Phone No: (617) 937-2470

AS

Austin Semiconductor

8701 Cross Park Drive

Austin, TX 78754-4566

Cage Code: OEU86

Phone No: (512) 339-1188

CYP

Cypress Semiconductor

3901 North First Street

San Jose, CA 95134-1599

Cage Code: 65786

Phone No: (408) 943-2656

HON

Honeywell SSEC

12001 State Highway 55

Plymouth, MN 55441-4799

Cage Code: 34168
Phone No: (612) 954-2956
HSC
Harris Semiconductor Products
2401 Palm Bay Road Northeast
Palm Bay, FL 32905
Cage Code: 34371
Phone No: (407) 724-7783
INTEL
Intel Corporation
500 West Chandler Boulevard
Chandler, AZ 85226-4702
Cage Code: 34649
Phone No: (602) 554-8450
LINF
Linfinity
11861 Western Avenue
Garden Grove, CA 92641-2119
Cage Code: 34333
Phone No: (714) 898-8121
LMFS
Lockheed Martin Federal Systems
(Formerly Loral Federal Systems Corporation)
9500 Godwin Drive
Manassas, VA 20110-4157
Cage Code: 52088
Phone No: (703) 367-1378
LTC
Linear Technology
1630 McCarthy Blvd.
Milpitas, CA 95035-7487
Cage Code: 64155
Phone No: (408) 432-1900
MOT
Motorola
1303 E. Algonquin Rd.
Shaumburg, IL 60196-1065
Cage Code: 34344
Phone No: (708) 576-6700
NSC

National Semiconductor Corporation
2900 Semiconductor Drive
Santa Clara, CA 95052-8090
Cage Code: 27014
Phone No: (408) 721-4189
PS
Phillips Semiconductor
811 East Arques Avenue
Sunnyvale, CA 94088
Cage Code: 18324
Phone No: (408) 991-2720
RAY
Raytheon
Semiconductor Div. HQ
350 Ellis St.
Mountain View, CA 94039-7016
Cage Code: 07933
Phone No: (415) 968-9211
SIL
Siliconix, Inc.
2201 Laurelwood Road
Santa Clara, CA 95056-0951
Cage Code: 17856
Phone: No: (408) 970-5260
TI
Texas Instruments
Post Office Box 60448
Midland, TX 79711-0448
Cage Code: 01295
Phone No: (915) 561-6614
UTMC
United Technologies Microelectronics Center
1575 Garden of the Gods Road
Colorado Springs, CO 80907-3486
Cage Code: 6534
Phone No: (719) 594-8000

Home
|
NASA Parts Selection List (NPSL)
|
Hybrids
| Converters, DC/DC
About NPSL
Prohibited Materials
Parts Selection Table of Contents
Capacitors
Circuit Protection Devices
Fuses
Connectors
Filters
Inductors
Microcircuits
NEW!
Monolithics
Hybrids
Resistors
Semiconductors
(Summary)
Diodes
Transistors
Thermistors
Wire and Cable

NASA Parts Selection List (NPSL)

HYBRID MICROCIRCUITS
Converters, DC/DC

Under construction

Parts
|
Packaging
|
Radiation
|
Publications

|
Calendar
|
Experts
Admin Login
|
Request Account
|
Feedback
|
Site Map
|
Help
|
Search
NEPP Program Manager:
Chuck Barnes, Jet Propulsion Laboratory
Responsible NASA Official:
Michael Sampson, NEPAG Manager
Website Comments:
Web Development Team
Last Modified:
August 8, 2001
AETD IT Security Banner
NASA Privacy Statement

Home
|
NASA Parts Selection List (NPSL)
|
Hybrids
| Hybrid Microprocessors and Peripherals
About NPSL
Prohibited Materials
Parts Selection Table of Contents
Capacitors
Circuit Protection Devices
Fuses
Connectors
Filters

Inductors
Microcircuits
NEW!
Monolithics
Hybrids
Resistors
Semiconductors
(Summary)
Diodes
Transistors
Thermistors
Wire and Cable

NASA Parts Selection List (NPSL)

HYBRID MICROCIRCUITS
Microprocessors and Peripherals

Under construction
Parts
|
Packaging
|
Radiation
|
Publications
|
Calendar
|
Experts
Admin Login
|
Request Account
|
Feedback
|
Site Map
|
Help
|
Search
NEPP Program Manager:

Chuck Barnes, Jet Propulsion Laboratory

Responsible NASA Official:

Michael Sampson, NEPAG Manager

Website Comments:

Web Development Team

Last Modified:

August 8, 2001

AETD IT Security Banner

NASA Privacy Statement

Home

|

NASA Parts Selection List (NPSL)

| Microcircuits

About NPSL

Prohibited Materials

Parts Selection Table of Contents

Capacitors

Circuit Protection Devices

Fuses

Connectors

Filters

Inductors

Microcircuits

NEW!

Monolithics

Hybrids

Resistors

Semiconductors

(Summary)

Diodes

Transistors

Thermistors

Wire and Cable

NASA Parts Selection List (NPSL)

MICROCIRCUITS

(Hybrids and MCMs)

Description

Converters, DC/DC (Under Construction!)

Microprocessors and Peripherals (Under Construction!)

Parts

|

Packaging

|

Radiation

|

Publications

|

Calendar

|

Experts

Admin Login

|

Request Account

|

Feedback

|

Site Map

|

Help

|

Search

NEPP Program Manager:

Chuck Barnes, Jet Propulsion Laboratory

Responsible NASA Official:

Michael Sampson, NEPAG Manager

Website Comments:

Web Development Team

Last Modified:

August 8, 2001

AETD IT Security Banner

NASA Privacy Statement

APPLICATION NOTES FOR MIL-PRF-39005

1) The maximum resistance value of preferred wirewound resistors is constrained by the size of the wire used in their construction. Wire size of less than 0.001 inch (0.03 mm) in nominal diameter is not recommended for NASA use.

Part Number Ordering Information, example and explanation:

RBR54L10001BR where,

RBR	54	L	10001	B
Style (Fixed, Wirewound, (Accurate), Established Reliability Resistors Conforming to MIL-PRF-39005)	Shape, Dimensions, Power Rating of the Resistor	Terminal Characteristics	Resistance Value (Ohms)	Resist

Part number ordering options are developed using the following criteria:

Style	Detail Specification
RBR52	MIL-PRF-39005/1
RBR54	MIL-PRF-39005/3
RBR56	MIL-PRF-39005/5
RBR57	MIL-PRF-39005/7
RBR71	MIL-PRF-39005/6
RBR74	MIL-PRF-39005/8
RBR75	MIL-PRF-39005/9

Terminal Characteristics
U = Weldable
L = Solderable

Failure Rate Level
P = 0.1%/1000 hrs (Level 2)
R = 0.01%/1000 hrs (Level 1)

Resistance Tolerance
T = +/- 0.01 %
Q = +/- 0.02 %
A = +/- 0.05 %
B = +/- 0.1%

Resistance Values:

Resistance values in ohms are contained in the following listing. When ordering, the first four digits represent significant figures and the last digit specifies the number of zeroes to follow. For example 10001 indicates 10,000 ohms and 10002 indicates 100,000 ohms. For values less than or equal to 1000 ohms the letter "R" is used to indicate a decimal point. For example 10R00 indicates 10.00 ohms.

Revision History for MIL-PRF-39005 Listing in the NPSL

06/28/04	Corrected Typo in part number scheme (All Styles). Updated source of supply info to reflect Vishay Ultronix dropping off QPL
03/10/98	Corrected parts listing tables to fix error in the available "decade" values. Errors existed for all decade values from 767 through 976.
03/04/98	Added dimensional drawings to this section
07/01/97	Initial Release of MIL-R-39005 Section in the NPSL

Go to -

NEPP

|

NPSL

|

Resistors

MIL-PRF-39005, RESISTORS

Fixed, Resistor, Wirewound, (Accurate), Established Reliability

RBR Styles

Part Number/Ordering Explanation

Important! Application Notes

Revision History for MIL-PRF-39005 Listing in the NPSL

Last Revision: 06/24/04

Click on the link below to see the associated parts selection listing:

Style	Detail Specification	Description (Length x Diameter) [Click the Links Below for Dimensional Drawings]
RBR52	MIL-PRF-39005/1	1/2 Watt, Tubular, Axial Lead (1.000" x 0.375") 10 ohms to 1.21 Mohms
RBR54	MIL-PRF-39005/3	1/4 Watt, Tubular, Axial Lead (0.750" x 0.250") 4.99 ohms to 562 kohms
RBR56	MIL-PRF-39005/5	1/8 Watt, Tubular, Axial Lead (0.344" x 0.250") 10 ohms to 220 kohms
RBR57	MIL-PRF-39005/7	3/4 Watt, Tubular, Axial Lead (1.000" x 0.500") 10 ohms to 1.37 Mohms
RBR71	MIL-PRF-39005/6	1/8 Watt, Tubular, Radial Lead (0.312" x 0.250") 10 ohms to 150 kohms
RBR74	MIL-PRF-39005/8	1/8 Watt, Tubular, Axial Lead (0.500" x 0.193") 100 ohms to 6.57 kohms
RBR75	MIL-PRF-39005/9	1/8 Watt, Tubular, Axial Lead (0.295" x 0.250") 10 ohms to 150 kohms

RBR52 Wirewound Resistors

	Resistance	Power	Terminal	Resistance	Level 1	Level 2	
Part Number	Value (Ohms)	Rating (W)	Characteristic (#)	Tolerance (%)	(FRL)(&)	(FRL)(&)	Manufacturer
RBR52%10R00#&	10.00	1/2	L, U	T, Q, A, B	R	P	SHA, ULT
RBR52%10R10#&	10.10	1/2	L, U	T, Q, A, B	R	P	SHA, ULT
RBR52%10R20#&	10.20	1/2	L, U	T, Q, A, B	R	P	SHA, ULT

RBR52%10R40#&	10.40	1/2	L, U	T, Q, A, B	R	P	SHA, ULT
RBR52%10R50#&	10.50	1/2	L, U	T, Q, A, B	R	P	SHA, ULT
RBR52%10R60#&	10.60	1/2	L, U	T, Q, A, B	R	P	SHA, ULT
RBR52%10R70#&	10.70	1/2	L, U	T, Q, A, B	R	P	SHA, ULT
RBR52%10R90#&	10.90	1/2	L, U	T, Q, A, B	R	P	SHA, ULT
RBR52%11R00#&	11.00	1/2	L, U	T, Q, A, B	R	P	SHA, ULT
RBR52%11R10#&	11.10	1/2	L, U	T, Q, A, B	R	P	SHA, ULT
RBR52%11R30#&	11.30	1/2	L, U	T, Q, A, B	R	P	SHA, ULT
RBR52%11R40#&	11.40	1/2	L, U	T, Q, A, B	R	P	SHA, ULT
RBR52%11R50#&	11.50	1/2	L, U	T, Q, A, B	R	P	SHA, ULT
RBR52%11R70#&	11.70	1/2	L, U	T, Q, A, B	R	P	SHA, ULT
RBR52%11R80#&	11.80	1/2	L, U	T, Q, A, B	R	P	SHA, ULT
RBR52%12R00#&	12.00	1/2	L, U	T, Q, A, B	R	P	SHA, ULT
RBR52%12R10#&	12.10	1/2	L, U	T, Q, A, B	R	P	SHA, ULT
RBR52%12R30#&	12.30	1/2	L, U	T, Q, A, B	R	P	SHA, ULT
RBR52%12R40#&	12.40	1/2	L, U	T, Q, A, B	R	P	SHA, ULT
RBR52%12R60#&	12.60	1/2	L, U	T, Q, A, B	R	P	SHA, ULT
RBR52%12R70#&	12.70	1/2	L, U	T, Q, A, B	R	P	SHA, ULT
RBR52%12R90#&	12.90	1/2	L, U	T, Q, A, B	R	P	SHA, ULT
RBR52%13R00#&	13.00	1/2	L, U	T, Q, A, B	R	P	SHA, ULT
RBR52%13R20#&	13.20	1/2	L, U	T, Q, A, B	R	P	SHA, ULT
RBR52%13R30#&	13.30	1/2	L, U	T, Q, A, B	R	P	SHA, ULT
RBR52%13R50#&	13.50	1/2	L, U	T, Q, A, B	R	P	SHA, ULT
RBR52%13R70#&	13.70	1/2	L, U	T, Q, A, B	R	P	SHA, ULT
RBR52%13R80#&	13.80	1/2	L, U	T, Q, A, B	R	P	SHA, ULT
RBR52%14R00#&	14.00	1/2	L, U	T, Q, A, B	R	P	SHA, ULT
RBR52%14R20#&	14.20	1/2	L, U	T, Q, A, B	R	P	SHA, ULT
RBR52%14R30#&	14.30	1/2	L, U	T, Q, A, B	R	P	SHA, ULT
RBR52%14R50#&	14.50	1/2	L, U	T, Q, A, B	R	P	SHA, ULT
RBR52%14R70#&	14.70	1/2	L, U	T, Q, A, B	R	P	SHA, ULT
RBR52%14R90#&	14.90	1/2	L, U	T, Q, A, B	R	P	SHA, ULT
RBR52%15R00#&	15.00	1/2	L, U	T, Q, A, B	R	P	SHA, ULT
RBR52%15R20#&	15.20	1/2	L, U	T, Q, A, B	R	P	SHA, ULT
RBR52%15R40#&	15.40	1/2	L, U	T, Q, A, B	R	P	SHA, ULT
RBR52%15R60#&	15.60	1/2	L, U	T, Q, A, B	R	P	SHA, ULT
RBR52%15R80#&	15.80	1/2	L, U	T, Q, A, B	R	P	SHA, ULT
RBR52%16R00#&	16.00	1/2	L, U	T, Q, A, B	R	P	SHA, ULT
RBR52%16R20#&	16.20	1/2	L, U	T, Q, A, B	R	P	SHA, ULT
RBR52%16R40#&	16.40	1/2	L, U	T, Q, A, B	R	P	SHA, ULT
RBR52%16R50#&	16.50	1/2	L, U	T, Q, A, B	R	P	SHA, ULT
RBR52%16R70#&	16.70	1/2	L, U	T, Q, A, B	R	P	SHA, ULT
RBR52%16R90#&	16.90	1/2	L, U	T, Q, A, B	R	P	SHA, ULT
RBR52%17R20#&	17.20	1/2	L, U	T, Q, A, B	R	P	SHA, ULT
RBR52%17R40#&	17.40	1/2	L, U	T, Q, A, B	R	P	SHA, ULT
RBR52%17R60#&	17.60	1/2	L, U	T, Q, A, B	R	P	SHA, ULT
RBR52%17R80#&	17.80	1/2	L, U	T, Q, A, B	R	P	SHA, ULT
RBR52%18R00#&	18.00	1/2	L, U	T, Q, A, B	R	P	SHA, ULT

RBR52%18R20#&	18.20	1/2	L, U	T, Q, A, B	R	P	SHA, ULT
RBR52%18R40#&	18.40	1/2	L, U	T, Q, A, B	R	P	SHA, ULT
RBR52%18R70#&	18.70	1/2	L, U	T, Q, A, B	R	P	SHA, ULT
RBR52%18R90#&	18.90	1/2	L, U	T, Q, A, B	R	P	SHA, ULT
RBR52%19R10#&	19.10	1/2	L, U	T, Q, A, B	R	P	SHA, ULT
RBR52%19R30#&	19.30	1/2	L, U	T, Q, A, B	R	P	SHA, ULT
RBR52%19R60#&	19.60	1/2	L, U	T, Q, A, B	R	P	SHA, ULT
RBR52%19R80#&	19.80	1/2	L, U	T, Q, A, B	R	P	SHA, ULT
RBR52%20R00#&	20.00	1/2	L, U	T, Q, A, B	R	P	SHA, ULT
RBR52%20R30#&	20.30	1/2	L, U	T, Q, A, B	R	P	SHA, ULT
RBR52%20R50#&	20.50	1/2	L, U	T, Q, A, B	R	P	SHA, ULT
RBR52%20R80#&	20.80	1/2	L, U	T, Q, A, B	R	P	SHA, ULT
RBR52%21R00#&	21.00	1/2	L, U	T, Q, A, B	R	P	SHA, ULT
RBR52%21R30#&	21.30	1/2	L, U	T, Q, A, B	R	P	SHA, ULT
RBR52%21R50#&	21.50	1/2	L, U	T, Q, A, B	R	P	SHA, ULT
RBR52%21R80#&	21.80	1/2	L, U	T, Q, A, B	R	P	SHA, ULT
RBR52%22R10#&	22.10	1/2	L, U	T, Q, A, B	R	P	SHA, ULT
RBR52%22R30#&	22.30	1/2	L, U	T, Q, A, B	R	P	SHA, ULT
RBR52%22R60#&	22.60	1/2	L, U	T, Q, A, B	R	P	SHA, ULT
RBR52%22R90#&	22.90	1/2	L, U	T, Q, A, B	R	P	SHA, ULT
RBR52%23R20#&	23.20	1/2	L, U	T, Q, A, B	R	P	SHA, ULT
RBR52%23R40#&	23.40	1/2	L, U	T, Q, A, B	R	P	SHA, ULT
RBR52%23R70#&	23.70	1/2	L, U	T, Q, A, B	R	P	SHA, ULT
RBR52%24R00#&	24.00	1/2	L, U	T, Q, A, B	R	P	SHA, ULT
RBR52%24R30#&	24.30	1/2	L, U	T, Q, A, B	R	P	SHA, ULT
RBR52%24R60#&	24.60	1/2	L, U	T, Q, A, B	R	P	SHA, ULT
RBR52%24R90#&	24.90	1/2	L, U	T, Q, A, B	R	P	SHA, ULT
RBR52%25R20#&	25.20	1/2	L, U	T, Q, A, B	R	P	SHA, ULT
RBR52%25R50#&	25.50	1/2	L, U	T, Q, A, B	R	P	SHA, ULT
RBR52%25R80#&	25.80	1/2	L, U	T, Q, A, B	R	P	SHA, ULT
RBR52%26R10#&	26.10	1/2	L, U	T, Q, A, B	R	P	SHA, ULT
RBR52%26R40#&	26.40	1/2	L, U	T, Q, A, B	R	P	SHA, ULT
RBR52%26R70#&	26.70	1/2	L, U	T, Q, A, B	R	P	SHA, ULT
RBR52%27R10#&	27.10	1/2	L, U	T, Q, A, B	R	P	SHA, ULT
RBR52%27R40#&	27.40	1/2	L, U	T, Q, A, B	R	P	SHA, ULT
RBR52%27R70#&	27.70	1/2	L, U	T, Q, A, B	R	P	SHA, ULT
RBR52%28R00#&	28.00	1/2	L, U	T, Q, A, B	R	P	SHA, ULT
RBR52%28R40#&	28.40	1/2	L, U	T, Q, A, B	R	P	SHA, ULT
RBR52%28R70#&	28.70	1/2	L, U	T, Q, A, B	R	P	SHA, ULT
RBR52%29R10#&	29.10	1/2	L, U	T, Q, A, B	R	P	SHA, ULT
RBR52%29R40#&	29.40	1/2	L, U	T, Q, A, B	R	P	SHA, ULT
RBR52%29R80#&	29.80	1/2	L, U	T, Q, A, B	R	P	SHA, ULT
RBR52%30R10#&	30.10	1/2	L, U	T, Q, A, B	R	P	SHA, ULT
RBR52%30R50#&	30.50	1/2	L, U	T, Q, A, B	R	P	SHA, ULT
RBR52%30R90#&	30.90	1/2	L, U	T, Q, A, B	R	P	SHA, ULT
RBR52%31R20#&	31.20	1/2	L, U	T, Q, A, B	R	P	SHA, ULT
RBR52%31R60#&	31.60	1/2	L, U	T, Q, A, B	R	P	SHA, ULT

RBR52%32R00#&	32.00	1/2	L, U	T, Q, A, B	R	P	SHA, ULT
RBR52%32R40#&	32.40	1/2	L, U	T, Q, A, B	R	P	SHA, ULT
RBR52%32R80#&	32.80	1/2	L, U	T, Q, A, B	R	P	SHA, ULT
RBR52%33R20#&	33.20	1/2	L, U	T, Q, A, B	R	P	SHA, ULT
RBR52%33R60#&	33.60	1/2	L, U	T, Q, A, B	R	P	SHA, ULT
RBR52%34R00#&	34.00	1/2	L, U	T, Q, A, B	R	P	SHA, ULT
RBR52%34R40#&	34.40	1/2	L, U	T, Q, A, B	R	P	SHA, ULT
RBR52%34R80#&	34.80	1/2	L, U	T, Q, A, B	R	P	SHA, ULT
RBR52%35R20#&	35.20	1/2	L, U	T, Q, A, B	R	P	SHA, ULT
RBR52%35R70#&	35.70	1/2	L, U	T, Q, A, B	R	P	SHA, ULT
RBR52%36R10#&	36.10	1/2	L, U	T, Q, A, B	R	P	SHA, ULT
RBR52%36R50#&	36.50	1/2	L, U	T, Q, A, B	R	P	SHA, ULT
RBR52%37R00#&	37.00	1/2	L, U	T, Q, A, B	R	P	SHA, ULT
RBR52%37R40#&	37.40	1/2	L, U	T, Q, A, B	R	P	SHA, ULT
RBR52%37R90#&	37.90	1/2	L, U	T, Q, A, B	R	P	SHA, ULT
RBR52%38R30#&	38.30	1/2	L, U	T, Q, A, B	R	P	SHA, ULT
RBR52%38R80#&	38.80	1/2	L, U	T, Q, A, B	R	P	SHA, ULT
RBR52%39R20#&	39.20	1/2	L, U	T, Q, A, B	R	P	SHA, ULT
RBR52%39R70#&	39.70	1/2	L, U	T, Q, A, B	R	P	SHA, ULT
RBR52%40R20#&	40.20	1/2	L, U	T, Q, A, B	R	P	SHA, ULT
RBR52%40R70#&	40.70	1/2	L, U	T, Q, A, B	R	P	SHA, ULT
RBR52%41R20#&	41.20	1/2	L, U	T, Q, A, B	R	P	SHA, ULT
RBR52%41R70#&	41.70	1/2	L, U	T, Q, A, B	R	P	SHA, ULT
RBR52%42R20#&	42.20	1/2	L, U	T, Q, A, B	R	P	SHA, ULT
RBR52%42R70#&	42.70	1/2	L, U	T, Q, A, B	R	P	SHA, ULT
RBR52%43R20#&	43.20	1/2	L, U	T, Q, A, B	R	P	SHA, ULT
RBR52%43R70#&	43.70	1/2	L, U	T, Q, A, B	R	P	SHA, ULT
RBR52%44R20#&	44.20	1/2	L, U	T, Q, A, B	R	P	SHA, ULT
RBR52%44R80#&	44.80	1/2	L, U	T, Q, A, B	R	P	SHA, ULT
RBR52%45R30#&	45.30	1/2	L, U	T, Q, A, B	R	P	SHA, ULT
RBR52%45R90#&	45.90	1/2	L, U	T, Q, A, B	R	P	SHA, ULT
RBR52%46R40#&	46.40	1/2	L, U	T, Q, A, B	R	P	SHA, ULT
RBR52%47R00#&	47.00	1/2	L, U	T, Q, A, B	R	P	SHA, ULT
RBR52%47R50#&	47.50	1/2	L, U	T, Q, A, B	R	P	SHA, ULT
RBR52%48R10#&	48.10	1/2	L, U	T, Q, A, B	R	P	SHA, ULT
RBR52%48R70#&	48.70	1/2	L, U	T, Q, A, B	R	P	SHA, ULT
RBR52%49R30#&	49.30	1/2	L, U	T, Q, A, B	R	P	SHA, ULT
RBR52%49R90#&	49.90	1/2	L, U	T, Q, A, B	R	P	SHA, ULT
RBR52%50R50#&	50.50	1/2	L, U	T, Q, A, B	R	P	SHA, ULT
RBR52%51R10#&	51.10	1/2	L, U	T, Q, A, B	R	P	SHA, ULT
RBR52%51R70#&	51.70	1/2	L, U	T, Q, A, B	R	P	SHA, ULT
RBR52%52R30#&	52.30	1/2	L, U	T, Q, A, B	R	P	SHA, ULT
RBR52%53R00#&	53.00	1/2	L, U	T, Q, A, B	R	P	SHA, ULT
RBR52%53R60#&	53.60	1/2	L, U	T, Q, A, B	R	P	SHA, ULT
RBR52%54R20#&	54.20	1/2	L, U	T, Q, A, B	R	P	SHA, ULT
RBR52%54R90#&	54.90	1/2	L, U	T, Q, A, B	R	P	SHA, ULT
RBR52%55R60#&	55.60	1/2	L, U	T, Q, A, B	R	P	SHA, ULT

RBR52%56R20#&	56.20	1/2	L, U	T, Q, A, B	R	P	SHA, ULT
RBR52%56R90#&	56.90	1/2	L, U	T, Q, A, B	R	P	SHA, ULT
RBR52%57R60#&	57.60	1/2	L, U	T, Q, A, B	R	P	SHA, ULT
RBR52%58R30#&	58.30	1/2	L, U	T, Q, A, B	R	P	SHA, ULT
RBR52%59R00#&	59.00	1/2	L, U	T, Q, A, B	R	P	SHA, ULT
RBR52%59R70#&	59.70	1/2	L, U	T, Q, A, B	R	P	SHA, ULT
RBR52%60R40#&	60.40	1/2	L, U	T, Q, A, B	R	P	SHA, ULT
RBR52%61R20#&	61.20	1/2	L, U	T, Q, A, B	R	P	SHA, ULT
RBR52%61R90#&	61.90	1/2	L, U	T, Q, A, B	R	P	SHA, ULT
RBR52%62R60#&	62.60	1/2	L, U	T, Q, A, B	R	P	SHA, ULT
RBR52%63R40#&	63.40	1/2	L, U	T, Q, A, B	R	P	SHA, ULT
RBR52%64R20#&	64.20	1/2	L, U	T, Q, A, B	R	P	SHA, ULT
RBR52%64R90#&	64.90	1/2	L, U	T, Q, A, B	R	P	SHA, ULT
RBR52%65R70#&	65.70	1/2	L, U	T, Q, A, B	R	P	SHA, ULT
RBR52%66R50#&	66.50	1/2	L, U	T, Q, A, B	R	P	SHA, ULT
RBR52%67R30#&	67.30	1/2	L, U	T, Q, A, B	R	P	SHA, ULT
RBR52%68R10#&	68.10	1/2	L, U	T, Q, A, B	R	P	SHA, ULT
RBR52%69R00#&	69.00	1/2	L, U	T, Q, A, B	R	P	SHA, ULT
RBR52%69R80#&	69.80	1/2	L, U	T, Q, A, B	R	P	SHA, ULT
RBR52%70R60#&	70.60	1/2	L, U	T, Q, A, B	R	P	SHA, ULT
RBR52%71R50#&	71.50	1/2	L, U	T, Q, A, B	R	P	SHA, ULT
RBR52%72R30#&	72.30	1/2	L, U	T, Q, A, B	R	P	SHA, ULT
RBR52%73R20#&	73.20	1/2	L, U	T, Q, A, B	R	P	SHA, ULT
RBR52%74R10#&	74.10	1/2	L, U	T, Q, A, B	R	P	SHA, ULT
RBR52%75R00#&	75.00	1/2	L, U	T, Q, A, B	R	P	SHA, ULT
RBR52%75R90#&	75.90	1/2	L, U	T, Q, A, B	R	P	SHA, ULT
RBR52%76R80#&	76.80	1/2	L, U	T, Q, A, B	R	P	SHA, ULT
RBR52%77R70#&	77.70	1/2	L, U	T, Q, A, B	R	P	SHA, ULT
RBR52%78R70#&	78.70	1/2	L, U	T, Q, A, B	R	P	SHA, ULT
RBR52%79R60#&	79.60	1/2	L, U	T, Q, A, B	R	P	SHA, ULT
RBR52%80R60#&	80.60	1/2	L, U	T, Q, A, B	R	P	SHA, ULT
RBR52%81R60#&	81.60	1/2	L, U	T, Q, A, B	R	P	SHA, ULT
RBR52%82R50#&	82.50	1/2	L, U	T, Q, A, B	R	P	SHA, ULT
RBR52%83R50#&	83.50	1/2	L, U	T, Q, A, B	R	P	SHA, ULT
RBR52%84R50#&	84.50	1/2	L, U	T, Q, A, B	R	P	SHA, ULT
RBR52%85R60#&	85.60	1/2	L, U	T, Q, A, B	R	P	SHA, ULT
RBR52%86R60#&	86.60	1/2	L, U	T, Q, A, B	R	P	SHA, ULT
RBR52%87R60#&	87.60	1/2	L, U	T, Q, A, B	R	P	SHA, ULT
RBR52%88R70#&	88.70	1/2	L, U	T, Q, A, B	R	P	SHA, ULT
RBR52%89R80#&	89.80	1/2	L, U	T, Q, A, B	R	P	SHA, ULT
RBR52%90R90#&	90.90	1/2	L, U	T, Q, A, B	R	P	SHA, ULT
RBR52%92R00#&	92.00	1/2	L, U	T, Q, A, B	R	P	SHA, ULT
RBR52%93R10#&	93.10	1/2	L, U	T, Q, A, B	R	P	SHA, ULT
RBR52%94R20#&	94.20	1/2	L, U	T, Q, A, B	R	P	SHA, ULT
RBR52%95R30#&	95.30	1/2	L, U	T, Q, A, B	R	P	SHA, ULT
RBR52%96R50#&	96.50	1/2	L, U	T, Q, A, B	R	P	SHA, ULT
RBR52%97R60#&	97.60	1/2	L, U	T, Q, A, B	R	P	SHA, ULT

RBR52%98R80#&	98.80	1/2	L, U	T, Q, A, B	R	P	SHA, ULT
RBR52%100R0#&	100.0	1/2	L, U	T, Q, A, B	R	P	SHA, ULT
RBR52%101R0#&	101.0	1/2	L, U	T, Q, A, B	R	P	SHA, ULT
RBR52%102R0#&	102.0	1/2	L, U	T, Q, A, B	R	P	SHA, ULT
RBR52%104R0#&	104.0	1/2	L, U	T, Q, A, B	R	P	SHA, ULT
RBR52%105R0#&	105.0	1/2	L, U	T, Q, A, B	R	P	SHA, ULT
RBR52%106R0#&	106.0	1/2	L, U	T, Q, A, B	R	P	SHA, ULT
RBR52%107R0#&	107.0	1/2	L, U	T, Q, A, B	R	P	SHA, ULT
RBR52%109R0#&	109.0	1/2	L, U	T, Q, A, B	R	P	SHA, ULT
RBR52%110R0#&	110.0	1/2	L, U	T, Q, A, B	R	P	SHA, ULT
RBR52%111R0#&	111.0	1/2	L, U	T, Q, A, B	R	P	SHA, ULT
RBR52%113R0#&	113.0	1/2	L, U	T, Q, A, B	R	P	SHA, ULT
RBR52%114R0#&	114.0	1/2	L, U	T, Q, A, B	R	P	SHA, ULT
RBR52%115R0#&	115.0	1/2	L, U	T, Q, A, B	R	P	SHA, ULT
RBR52%117R0#&	117.0	1/2	L, U	T, Q, A, B	R	P	SHA, ULT
RBR52%118R0#&	118.0	1/2	L, U	T, Q, A, B	R	P	SHA, ULT
RBR52%120R0#&	120.0	1/2	L, U	T, Q, A, B	R	P	SHA, ULT
RBR52%121R0#&	121.0	1/2	L, U	T, Q, A, B	R	P	SHA, ULT
RBR52%123R0#&	123.0	1/2	L, U	T, Q, A, B	R	P	SHA, ULT
RBR52%124R0#&	124.0	1/2	L, U	T, Q, A, B	R	P	SHA, ULT
RBR52%126R0#&	126.0	1/2	L, U	T, Q, A, B	R	P	SHA, ULT
RBR52%127R0#&	127.0	1/2	L, U	T, Q, A, B	R	P	SHA, ULT
RBR52%129R0#&	129.0	1/2	L, U	T, Q, A, B	R	P	SHA, ULT
RBR52%130R0#&	130.0	1/2	L, U	T, Q, A, B	R	P	SHA, ULT
RBR52%132R0#&	132.0	1/2	L, U	T, Q, A, B	R	P	SHA, ULT
RBR52%133R0#&	133.0	1/2	L, U	T, Q, A, B	R	P	SHA, ULT
RBR52%135R0#&	135.0	1/2	L, U	T, Q, A, B	R	P	SHA, ULT
RBR52%137R0#&	137.0	1/2	L, U	T, Q, A, B	R	P	SHA, ULT
RBR52%138R0#&	138.0	1/2	L, U	T, Q, A, B	R	P	SHA, ULT
RBR52%140R0#&	140.0	1/2	L, U	T, Q, A, B	R	P	SHA, ULT
RBR52%142R0#&	142.0	1/2	L, U	T, Q, A, B	R	P	SHA, ULT
RBR52%143R0#&	143.0	1/2	L, U	T, Q, A, B	R	P	SHA, ULT
RBR52%145R0#&	145.0	1/2	L, U	T, Q, A, B	R	P	SHA, ULT
RBR52%147R0#&	147.0	1/2	L, U	T, Q, A, B	R	P	SHA, ULT
RBR52%149R0#&	149.0	1/2	L, U	T, Q, A, B	R	P	SHA, ULT
RBR52%150R0#&	150.0	1/2	L, U	T, Q, A, B	R	P	SHA, ULT
RBR52%152R0#&	152.0	1/2	L, U	T, Q, A, B	R	P	SHA, ULT
RBR52%154R0#&	154.0	1/2	L, U	T, Q, A, B	R	P	SHA, ULT
RBR52%156R0#&	156.0	1/2	L, U	T, Q, A, B	R	P	SHA, ULT
RBR52%158R0#&	158.0	1/2	L, U	T, Q, A, B	R	P	SHA, ULT
RBR52%160R0#&	160.0	1/2	L, U	T, Q, A, B	R	P	SHA, ULT
RBR52%162R0#&	162.0	1/2	L, U	T, Q, A, B	R	P	SHA, ULT
RBR52%164R0#&	164.0	1/2	L, U	T, Q, A, B	R	P	SHA, ULT
RBR52%165R0#&	165.0	1/2	L, U	T, Q, A, B	R	P	SHA, ULT
RBR52%167R0#&	167.0	1/2	L, U	T, Q, A, B	R	P	SHA, ULT
RBR52%169R0#&	169.0	1/2	L, U	T, Q, A, B	R	P	SHA, ULT
RBR52%172R0#&	172.0	1/2	L, U	T, Q, A, B	R	P	SHA, ULT

RBR52%174R0#&	174.0	1/2	L, U	T, Q, A, B	R	P	SHA, ULT
RBR52%176R0#&	176.0	1/2	L, U	T, Q, A, B	R	P	SHA, ULT
RBR52%178R0#&	178.0	1/2	L, U	T, Q, A, B	R	P	SHA, ULT
RBR52%180R0#&	180.0	1/2	L, U	T, Q, A, B	R	P	SHA, ULT
RBR52%182R0#&	182.0	1/2	L, U	T, Q, A, B	R	P	SHA, ULT
RBR52%184R0#&	184.0	1/2	L, U	T, Q, A, B	R	P	SHA, ULT
RBR52%187R0#&	187.0	1/2	L, U	T, Q, A, B	R	P	SHA, ULT
RBR52%189R0#&	189.0	1/2	L, U	T, Q, A, B	R	P	SHA, ULT
RBR52%191R0#&	191.0	1/2	L, U	T, Q, A, B	R	P	SHA, ULT
RBR52%193R0#&	193.0	1/2	L, U	T, Q, A, B	R	P	SHA, ULT
RBR52%196R0#&	196.0	1/2	L, U	T, Q, A, B	R	P	SHA, ULT
RBR52%198R0#&	198.0	1/2	L, U	T, Q, A, B	R	P	SHA, ULT
RBR52%200R0#&	200.0	1/2	L, U	T, Q, A, B	R	P	SHA, ULT
RBR52%203R0#&	203.0	1/2	L, U	T, Q, A, B	R	P	SHA, ULT
RBR52%205R0#&	205.0	1/2	L, U	T, Q, A, B	R	P	SHA, ULT
RBR52%208R0#&	208.0	1/2	L, U	T, Q, A, B	R	P	SHA, ULT
RBR52%210R0#&	210.0	1/2	L, U	T, Q, A, B	R	P	SHA, ULT
RBR52%213R0#&	213.0	1/2	L, U	T, Q, A, B	R	P	SHA, ULT
RBR52%215R0#&	215.0	1/2	L, U	T, Q, A, B	R	P	SHA, ULT
RBR52%218R0#&	218.0	1/2	L, U	T, Q, A, B	R	P	SHA, ULT
RBR52%221R0#&	221.0	1/2	L, U	T, Q, A, B	R	P	SHA, ULT
RBR52%223R0#&	223.0	1/2	L, U	T, Q, A, B	R	P	SHA, ULT
RBR52%226R0#&	226.0	1/2	L, U	T, Q, A, B	R	P	SHA, ULT
RBR52%229R0#&	229.0	1/2	L, U	T, Q, A, B	R	P	SHA, ULT
RBR52%232R0#&	232.0	1/2	L, U	T, Q, A, B	R	P	SHA, ULT
RBR52%234R0#&	234.0	1/2	L, U	T, Q, A, B	R	P	SHA, ULT
RBR52%237R0#&	237.0	1/2	L, U	T, Q, A, B	R	P	SHA, ULT
RBR52%240R0#&	240.0	1/2	L, U	T, Q, A, B	R	P	SHA, ULT
RBR52%243R0#&	243.0	1/2	L, U	T, Q, A, B	R	P	SHA, ULT
RBR52%246R0#&	246.0	1/2	L, U	T, Q, A, B	R	P	SHA, ULT
RBR52%249R0#&	249.0	1/2	L, U	T, Q, A, B	R	P	SHA, ULT
RBR52%252R0#&	252.0	1/2	L, U	T, Q, A, B	R	P	SHA, ULT
RBR52%255R0#&	255.0	1/2	L, U	T, Q, A, B	R	P	SHA, ULT
RBR52%258R0#&	258.0	1/2	L, U	T, Q, A, B	R	P	SHA, ULT
RBR52%261R0#&	261.0	1/2	L, U	T, Q, A, B	R	P	SHA, ULT
RBR52%264R0#&	264.0	1/2	L, U	T, Q, A, B	R	P	SHA, ULT
RBR52%267R0#&	267.0	1/2	L, U	T, Q, A, B	R	P	SHA, ULT
RBR52%271R0#&	271.0	1/2	L, U	T, Q, A, B	R	P	SHA, ULT
RBR52%274R0#&	274.0	1/2	L, U	T, Q, A, B	R	P	SHA, ULT
RBR52%277R0#&	277.0	1/2	L, U	T, Q, A, B	R	P	SHA, ULT
RBR52%280R0#&	280.0	1/2	L, U	T, Q, A, B	R	P	SHA, ULT
RBR52%284R0#&	284.0	1/2	L, U	T, Q, A, B	R	P	SHA, ULT
RBR52%287R0#&	287.0	1/2	L, U	T, Q, A, B	R	P	SHA, ULT
RBR52%291R0#&	291.0	1/2	L, U	T, Q, A, B	R	P	SHA, ULT
RBR52%294R0#&	294.0	1/2	L, U	T, Q, A, B	R	P	SHA, ULT
RBR52%298R0#&	298.0	1/2	L, U	T, Q, A, B	R	P	SHA, ULT
RBR52%301R0#&	301.0	1/2	L, U	T, Q, A, B	R	P	SHA, ULT

RBR52%305R0#&	305.0	1/2	L, U	T, Q, A, B	R	P	SHA, ULT
RBR52%309R0#&	309.0	1/2	L, U	T, Q, A, B	R	P	SHA, ULT
RBR52%312R0#&	312.0	1/2	L, U	T, Q, A, B	R	P	SHA, ULT
RBR52%316R0#&	316.0	1/2	L, U	T, Q, A, B	R	P	SHA, ULT
RBR52%320R0#&	320.0	1/2	L, U	T, Q, A, B	R	P	SHA, ULT
RBR52%324R0#&	324.0	1/2	L, U	T, Q, A, B	R	P	SHA, ULT
RBR52%328R0#&	328.0	1/2	L, U	T, Q, A, B	R	P	SHA, ULT
RBR52%332R0#&	332.0	1/2	L, U	T, Q, A, B	R	P	SHA, ULT
RBR52%336R0#&	336.0	1/2	L, U	T, Q, A, B	R	P	SHA, ULT
RBR52%340R0#&	340.0	1/2	L, U	T, Q, A, B	R	P	SHA, ULT
RBR52%344R0#&	344.0	1/2	L, U	T, Q, A, B	R	P	SHA, ULT
RBR52%348R0#&	348.0	1/2	L, U	T, Q, A, B	R	P	SHA, ULT
RBR52%352R0#&	352.0	1/2	L, U	T, Q, A, B	R	P	SHA, ULT
RBR52%357R0#&	357.0	1/2	L, U	T, Q, A, B	R	P	SHA, ULT
RBR52%361R0#&	361.0	1/2	L, U	T, Q, A, B	R	P	SHA, ULT
RBR52%365R0#&	365.0	1/2	L, U	T, Q, A, B	R	P	SHA, ULT
RBR52%370R0#&	370.0	1/2	L, U	T, Q, A, B	R	P	SHA, ULT
RBR52%374R0#&	374.0	1/2	L, U	T, Q, A, B	R	P	SHA, ULT
RBR52%379R0#&	379.0	1/2	L, U	T, Q, A, B	R	P	SHA, ULT
RBR52%383R0#&	383.0	1/2	L, U	T, Q, A, B	R	P	SHA, ULT
RBR52%388R0#&	388.0	1/2	L, U	T, Q, A, B	R	P	SHA, ULT
RBR52%392R0#&	392.0	1/2	L, U	T, Q, A, B	R	P	SHA, ULT
RBR52%397R0#&	397.0	1/2	L, U	T, Q, A, B	R	P	SHA, ULT
RBR52%402R0#&	402.0	1/2	L, U	T, Q, A, B	R	P	SHA, ULT
RBR52%407R0#&	407.0	1/2	L, U	T, Q, A, B	R	P	SHA, ULT
RBR52%412R0#&	412.0	1/2	L, U	T, Q, A, B	R	P	SHA, ULT
RBR52%417R0#&	417.0	1/2	L, U	T, Q, A, B	R	P	SHA, ULT
RBR52%422R0#&	422.0	1/2	L, U	T, Q, A, B	R	P	SHA, ULT
RBR52%427R0#&	427.0	1/2	L, U	T, Q, A, B	R	P	SHA, ULT
RBR52%432R0#&	432.0	1/2	L, U	T, Q, A, B	R	P	SHA, ULT
RBR52%437R0#&	437.0	1/2	L, U	T, Q, A, B	R	P	SHA, ULT
RBR52%442R0#&	442.0	1/2	L, U	T, Q, A, B	R	P	SHA, ULT
RBR52%448R0#&	448.0	1/2	L, U	T, Q, A, B	R	P	SHA, ULT
RBR52%453R0#&	453.0	1/2	L, U	T, Q, A, B	R	P	SHA, ULT
RBR52%459R0#&	459.0	1/2	L, U	T, Q, A, B	R	P	SHA, ULT
RBR52%464R0#&	464.0	1/2	L, U	T, Q, A, B	R	P	SHA, ULT
RBR52%470R0#&	470.0	1/2	L, U	T, Q, A, B	R	P	SHA, ULT
RBR52%475R0#&	475.0	1/2	L, U	T, Q, A, B	R	P	SHA, ULT
RBR52%481R0#&	481.0	1/2	L, U	T, Q, A, B	R	P	SHA, ULT
RBR52%487R0#&	487.0	1/2	L, U	T, Q, A, B	R	P	SHA, ULT
RBR52%493R0#&	493.0	1/2	L, U	T, Q, A, B	R	P	SHA, ULT
RBR52%499R0#&	499.0	1/2	L, U	T, Q, A, B	R	P	SHA, ULT
RBR52%505R0#&	505.0	1/2	L, U	T, Q, A, B	R	P	SHA, ULT
RBR52%511R0#&	511.0	1/2	L, U	T, Q, A, B	R	P	SHA, ULT
RBR52%517R0#&	517.0	1/2	L, U	T, Q, A, B	R	P	SHA, ULT
RBR52%523R0#&	523.0	1/2	L, U	T, Q, A, B	R	P	SHA, ULT
RBR52%530R0#&	530.0	1/2	L, U	T, Q, A, B	R	P	SHA, ULT

RBR52%536R0#&	536.0	1/2	L, U	T, Q, A, B	R	P	SHA, ULT
RBR52%542R0#&	542.0	1/2	L, U	T, Q, A, B	R	P	SHA, ULT
RBR52%549R0#&	549.0	1/2	L, U	T, Q, A, B	R	P	SHA, ULT
RBR52%556R0#&	556.0	1/2	L, U	T, Q, A, B	R	P	SHA, ULT
RBR52%562R0#&	562.0	1/2	L, U	T, Q, A, B	R	P	SHA, ULT
RBR52%569R0#&	569.0	1/2	L, U	T, Q, A, B	R	P	SHA, ULT
RBR52%576R0#&	576.0	1/2	L, U	T, Q, A, B	R	P	SHA, ULT
RBR52%583R0#&	583.0	1/2	L, U	T, Q, A, B	R	P	SHA, ULT
RBR52%590R0#&	590.0	1/2	L, U	T, Q, A, B	R	P	SHA, ULT
RBR52%597R0#&	597.0	1/2	L, U	T, Q, A, B	R	P	SHA, ULT
RBR52%604R0#&	604.0	1/2	L, U	T, Q, A, B	R	P	SHA, ULT
RBR52%612R0#&	612.0	1/2	L, U	T, Q, A, B	R	P	SHA, ULT
RBR52%619R0#&	619.0	1/2	L, U	T, Q, A, B	R	P	SHA, ULT
RBR52%626R0#&	626.0	1/2	L, U	T, Q, A, B	R	P	SHA, ULT
RBR52%634R0#&	634.0	1/2	L, U	T, Q, A, B	R	P	SHA, ULT
RBR52%642R0#&	642.0	1/2	L, U	T, Q, A, B	R	P	SHA, ULT
RBR52%649R0#&	649.0	1/2	L, U	T, Q, A, B	R	P	SHA, ULT
RBR52%657R0#&	657.0	1/2	L, U	T, Q, A, B	R	P	SHA, ULT
RBR52%665R0#&	665.0	1/2	L, U	T, Q, A, B	R	P	SHA, ULT
RBR52%673R0#&	673.0	1/2	L, U	T, Q, A, B	R	P	SHA, ULT
RBR52%681R0#&	681.0	1/2	L, U	T, Q, A, B	R	P	SHA, ULT
RBR52%690R0#&	690.0	1/2	L, U	T, Q, A, B	R	P	SHA, ULT
RBR52%698R0#&	698.0	1/2	L, U	T, Q, A, B	R	P	SHA, ULT
RBR52%706R0#&	706.0	1/2	L, U	T, Q, A, B	R	P	SHA, ULT
RBR52%715R0#&	715.0	1/2	L, U	T, Q, A, B	R	P	SHA, ULT
RBR52%723R0#&	723.0	1/2	L, U	T, Q, A, B	R	P	SHA, ULT
RBR52%732R0#&	732.0	1/2	L, U	T, Q, A, B	R	P	SHA, ULT
RBR52%741R0#&	741.0	1/2	L, U	T, Q, A, B	R	P	SHA, ULT
RBR52%750R0#&	750.0	1/2	L, U	T, Q, A, B	R	P	SHA, ULT
RBR52%759R0#&	759.0	1/2	L, U	T, Q, A, B	R	P	SHA, ULT
RBR52%768R0#&	768.0	1/2	L, U	T, Q, A, B	R	P	SHA, ULT
RBR52%777R0#&	777.0	1/2	L, U	T, Q, A, B	R	P	SHA, ULT
RBR52%787R0#&	787.0	1/2	L, U	T, Q, A, B	R	P	SHA, ULT
RBR52%796R0#&	796.0	1/2	L, U	T, Q, A, B	R	P	SHA, ULT
RBR52%806R0#&	806.0	1/2	L, U	T, Q, A, B	R	P	SHA, ULT
RBR52%816R0#&	816.0	1/2	L, U	T, Q, A, B	R	P	SHA, ULT
RBR52%825R0#&	825.0	1/2	L, U	T, Q, A, B	R	P	SHA, ULT
RBR52%835R0#&	835.0	1/2	L, U	T, Q, A, B	R	P	SHA, ULT
RBR52%845R0#&	845.0	1/2	L, U	T, Q, A, B	R	P	SHA, ULT
RBR52%856R0#&	856.0	1/2	L, U	T, Q, A, B	R	P	SHA, ULT
RBR52%866R0#&	866.0	1/2	L, U	T, Q, A, B	R	P	SHA, ULT
RBR52%876R0#&	876.0	1/2	L, U	T, Q, A, B	R	P	SHA, ULT
RBR52%887R0#&	887.0	1/2	L, U	T, Q, A, B	R	P	SHA, ULT
RBR52%898R0#&	898.0	1/2	L, U	T, Q, A, B	R	P	SHA, ULT
RBR52%909R0#&	909.0	1/2	L, U	T, Q, A, B	R	P	SHA, ULT
RBR52%920R0#&	920.0	1/2	L, U	T, Q, A, B	R	P	SHA, ULT
RBR52%931R0#&	931.0	1/2	L, U	T, Q, A, B	R	P	SHA, ULT

RBR52%942R0#&	942.0	1/2	L, U	T, Q, A, B	R	P	SHA, ULT
RBR52%953R0#&	953.0	1/2	L, U	T, Q, A, B	R	P	SHA, ULT
RBR52%965R0#&	965.0	1/2	L, U	T, Q, A, B	R	P	SHA, ULT
RBR52%976R0#&	976.0	1/2	L, U	T, Q, A, B	R	P	SHA, ULT
RBR52%988R0#&	988.0	1/2	L, U	T, Q, A, B	R	P	SHA, ULT
RBR52%10000#&	1,000	1/2	L, U	T, Q, A, B	R	P	SHA, ULT
RBR52%10100#&	1,010	1/2	L, U	T, Q, A, B	R	P	SHA, ULT
RBR52%10200#&	1,020	1/2	L, U	T, Q, A, B	R	P	SHA, ULT
RBR52%10400#&	1,040	1/2	L, U	T, Q, A, B	R	P	SHA, ULT
RBR52%10500#&	1,050	1/2	L, U	T, Q, A, B	R	P	SHA, ULT
RBR52%10600#&	1,060	1/2	L, U	T, Q, A, B	R	P	SHA, ULT
RBR52%10700#&	1,070	1/2	L, U	T, Q, A, B	R	P	SHA, ULT
RBR52%10900#&	1,090	1/2	L, U	T, Q, A, B	R	P	SHA, ULT
RBR52%11000#&	1,100	1/2	L, U	T, Q, A, B	R	P	SHA, ULT
RBR52%11100#&	1,110	1/2	L, U	T, Q, A, B	R	P	SHA, ULT
RBR52%11300#&	1,130	1/2	L, U	T, Q, A, B	R	P	SHA, ULT
RBR52%11400#&	1,140	1/2	L, U	T, Q, A, B	R	P	SHA, ULT
RBR52%11500#&	1,150	1/2	L, U	T, Q, A, B	R	P	SHA, ULT
RBR52%11700#&	1,170	1/2	L, U	T, Q, A, B	R	P	SHA, ULT
RBR52%11800#&	1,180	1/2	L, U	T, Q, A, B	R	P	SHA, ULT
RBR52%12000#&	1,200	1/2	L, U	T, Q, A, B	R	P	SHA, ULT
RBR52%12100#&	1,210	1/2	L, U	T, Q, A, B	R	P	SHA, ULT
RBR52%12300#&	1,230	1/2	L, U	T, Q, A, B	R	P	SHA, ULT
RBR52%12400#&	1,240	1/2	L, U	T, Q, A, B	R	P	SHA, ULT
RBR52%12600#&	1,260	1/2	L, U	T, Q, A, B	R	P	SHA, ULT
RBR52%12700#&	1,270	1/2	L, U	T, Q, A, B	R	P	SHA, ULT
RBR52%12900#&	1,290	1/2	L, U	T, Q, A, B	R	P	SHA, ULT
RBR52%13000#&	1,300	1/2	L, U	T, Q, A, B	R	P	SHA, ULT
RBR52%13200#&	1,320	1/2	L, U	T, Q, A, B	R	P	SHA, ULT
RBR52%13300#&	1,330	1/2	L, U	T, Q, A, B	R	P	SHA, ULT
RBR52%13500#&	1,350	1/2	L, U	T, Q, A, B	R	P	SHA, ULT
RBR52%13700#&	1,370	1/2	L, U	T, Q, A, B	R	P	SHA, ULT
RBR52%13800#&	1,380	1/2	L, U	T, Q, A, B	R	P	SHA, ULT
RBR52%14000#&	1,400	1/2	L, U	T, Q, A, B	R	P	SHA, ULT
RBR52%14200#&	1,420	1/2	L, U	T, Q, A, B	R	P	SHA, ULT
RBR52%14300#&	1,430	1/2	L, U	T, Q, A, B	R	P	SHA, ULT
RBR52%14500#&	1,450	1/2	L, U	T, Q, A, B	R	P	SHA, ULT
RBR52%14700#&	1,470	1/2	L, U	T, Q, A, B	R	P	SHA, ULT
RBR52%14900#&	1,490	1/2	L, U	T, Q, A, B	R	P	SHA, ULT
RBR52%15000#&	1,500	1/2	L, U	T, Q, A, B	R	P	SHA, ULT
RBR52%15200#&	1,520	1/2	L, U	T, Q, A, B	R	P	SHA, ULT
RBR52%15400#&	1,540	1/2	L, U	T, Q, A, B	R	P	SHA, ULT
RBR52%15600#&	1,560	1/2	L, U	T, Q, A, B	R	P	SHA, ULT
RBR52%15800#&	1,580	1/2	L, U	T, Q, A, B	R	P	SHA, ULT
RBR52%16000#&	1,600	1/2	L, U	T, Q, A, B	R	P	SHA, ULT
RBR52%16200#&	1,620	1/2	L, U	T, Q, A, B	R	P	SHA, ULT
RBR52%16400#&	1,640	1/2	L, U	T, Q, A, B	R	P	SHA, ULT

RBR52%16500#&	1,650	1/2	L, U	T, Q, A, B	R	P	SHA, ULT
RBR52%16700#&	1,670	1/2	L, U	T, Q, A, B	R	P	SHA, ULT
RBR52%16900#&	1,690	1/2	L, U	T, Q, A, B	R	P	SHA, ULT
RBR52%17200#&	1,720	1/2	L, U	T, Q, A, B	R	P	SHA, ULT
RBR52%17400#&	1,740	1/2	L, U	T, Q, A, B	R	P	SHA, ULT
RBR52%17600#&	1,760	1/2	L, U	T, Q, A, B	R	P	SHA, ULT
RBR52%17800#&	1,780	1/2	L, U	T, Q, A, B	R	P	SHA, ULT
RBR52%18000#&	1,800	1/2	L, U	T, Q, A, B	R	P	SHA, ULT
RBR52%18200#&	1,820	1/2	L, U	T, Q, A, B	R	P	SHA, ULT
RBR52%18400#&	1,840	1/2	L, U	T, Q, A, B	R	P	SHA, ULT
RBR52%18700#&	1,870	1/2	L, U	T, Q, A, B	R	P	SHA, ULT
RBR52%18900#&	1,890	1/2	L, U	T, Q, A, B	R	P	SHA, ULT
RBR52%19100#&	1,910	1/2	L, U	T, Q, A, B	R	P	SHA, ULT
RBR52%19300#&	1,930	1/2	L, U	T, Q, A, B	R	P	SHA, ULT
RBR52%19600#&	1,960	1/2	L, U	T, Q, A, B	R	P	SHA, ULT
RBR52%19800#&	1,980	1/2	L, U	T, Q, A, B	R	P	SHA, ULT
RBR52%20000#&	2,000	1/2	L, U	T, Q, A, B	R	P	SHA, ULT
RBR52%20300#&	2,030	1/2	L, U	T, Q, A, B	R	P	SHA, ULT
RBR52%20500#&	2,050	1/2	L, U	T, Q, A, B	R	P	SHA, ULT
RBR52%20800#&	2,080	1/2	L, U	T, Q, A, B	R	P	SHA, ULT
RBR52%21000#&	2,100	1/2	L, U	T, Q, A, B	R	P	SHA, ULT
RBR52%21300#&	2,130	1/2	L, U	T, Q, A, B	R	P	SHA, ULT
RBR52%21500#&	2,150	1/2	L, U	T, Q, A, B	R	P	SHA, ULT
RBR52%21800#&	2,180	1/2	L, U	T, Q, A, B	R	P	SHA, ULT
RBR52%22100#&	2,210	1/2	L, U	T, Q, A, B	R	P	SHA, ULT
RBR52%22300#&	2,230	1/2	L, U	T, Q, A, B	R	P	SHA, ULT
RBR52%22600#&	2,260	1/2	L, U	T, Q, A, B	R	P	SHA, ULT
RBR52%22900#&	2,290	1/2	L, U	T, Q, A, B	R	P	SHA, ULT
RBR52%23200#&	2,320	1/2	L, U	T, Q, A, B	R	P	SHA, ULT
RBR52%23400#&	2,340	1/2	L, U	T, Q, A, B	R	P	SHA, ULT
RBR52%23700#&	2,370	1/2	L, U	T, Q, A, B	R	P	SHA, ULT
RBR52%24000#&	2,400	1/2	L, U	T, Q, A, B	R	P	SHA, ULT
RBR52%24300#&	2,430	1/2	L, U	T, Q, A, B	R	P	SHA, ULT
RBR52%24600#&	2,460	1/2	L, U	T, Q, A, B	R	P	SHA, ULT
RBR52%24900#&	2,490	1/2	L, U	T, Q, A, B	R	P	SHA, ULT
RBR52%25200#&	2,520	1/2	L, U	T, Q, A, B	R	P	SHA, ULT
RBR52%25500#&	2,550	1/2	L, U	T, Q, A, B	R	P	SHA, ULT
RBR52%25800#&	2,580	1/2	L, U	T, Q, A, B	R	P	SHA, ULT
RBR52%26100#&	2,610	1/2	L, U	T, Q, A, B	R	P	SHA, ULT
RBR52%26400#&	2,640	1/2	L, U	T, Q, A, B	R	P	SHA, ULT
RBR52%26700#&	2,670	1/2	L, U	T, Q, A, B	R	P	SHA, ULT
RBR52%27100#&	2,710	1/2	L, U	T, Q, A, B	R	P	SHA, ULT
RBR52%27400#&	2,740	1/2	L, U	T, Q, A, B	R	P	SHA, ULT
RBR52%27700#&	2,770	1/2	L, U	T, Q, A, B	R	P	SHA, ULT
RBR52%28000#&	2,800	1/2	L, U	T, Q, A, B	R	P	SHA, ULT
RBR52%28400#&	2,840	1/2	L, U	T, Q, A, B	R	P	SHA, ULT
RBR52%28700#&	2,870	1/2	L, U	T, Q, A, B	R	P	SHA, ULT

RBR52%29100#&	2,910	1/2	L, U	T, Q, A, B	R	P	SHA, ULT
RBR52%29400#&	2,940	1/2	L, U	T, Q, A, B	R	P	SHA, ULT
RBR52%29800#&	2,980	1/2	L, U	T, Q, A, B	R	P	SHA, ULT
RBR52%30100#&	3,010	1/2	L, U	T, Q, A, B	R	P	SHA, ULT
RBR52%30500#&	3,050	1/2	L, U	T, Q, A, B	R	P	SHA, ULT
RBR52%30900#&	3,090	1/2	L, U	T, Q, A, B	R	P	SHA, ULT
RBR52%31200#&	3,120	1/2	L, U	T, Q, A, B	R	P	SHA, ULT
RBR52%31600#&	3,160	1/2	L, U	T, Q, A, B	R	P	SHA, ULT
RBR52%32000#&	3,200	1/2	L, U	T, Q, A, B	R	P	SHA, ULT
RBR52%32400#&	3,240	1/2	L, U	T, Q, A, B	R	P	SHA, ULT
RBR52%32800#&	3,280	1/2	L, U	T, Q, A, B	R	P	SHA, ULT
RBR52%33200#&	3,320	1/2	L, U	T, Q, A, B	R	P	SHA, ULT
RBR52%33600#&	3,360	1/2	L, U	T, Q, A, B	R	P	SHA, ULT
RBR52%34000#&	3,400	1/2	L, U	T, Q, A, B	R	P	SHA, ULT
RBR52%34400#&	3,440	1/2	L, U	T, Q, A, B	R	P	SHA, ULT
RBR52%34800#&	3,480	1/2	L, U	T, Q, A, B	R	P	SHA, ULT
RBR52%35200#&	3,520	1/2	L, U	T, Q, A, B	R	P	SHA, ULT
RBR52%35700#&	3,570	1/2	L, U	T, Q, A, B	R	P	SHA, ULT
RBR52%36100#&	3,610	1/2	L, U	T, Q, A, B	R	P	SHA, ULT
RBR52%36500#&	3,650	1/2	L, U	T, Q, A, B	R	P	SHA, ULT
RBR52%37000#&	3,700	1/2	L, U	T, Q, A, B	R	P	SHA, ULT
RBR52%37400#&	3,740	1/2	L, U	T, Q, A, B	R	P	SHA, ULT
RBR52%37900#&	3,790	1/2	L, U	T, Q, A, B	R	P	SHA, ULT
RBR52%38300#&	3,830	1/2	L, U	T, Q, A, B	R	P	SHA, ULT
RBR52%38800#&	3,880	1/2	L, U	T, Q, A, B	R	P	SHA, ULT
RBR52%39200#&	3,920	1/2	L, U	T, Q, A, B	R	P	SHA, ULT
RBR52%39700#&	3,970	1/2	L, U	T, Q, A, B	R	P	SHA, ULT
RBR52%40200#&	4,020	1/2	L, U	T, Q, A, B	R	P	SHA, ULT
RBR52%40700#&	4,070	1/2	L, U	T, Q, A, B	R	P	SHA, ULT
RBR52%41200#&	4,120	1/2	L, U	T, Q, A, B	R	P	SHA, ULT
RBR52%41700#&	4,170	1/2	L, U	T, Q, A, B	R	P	SHA, ULT
RBR52%42200#&	4,220	1/2	L, U	T, Q, A, B	R	P	SHA, ULT
RBR52%42700#&	4,270	1/2	L, U	T, Q, A, B	R	P	SHA, ULT
RBR52%43200#&	4,320	1/2	L, U	T, Q, A, B	R	P	SHA, ULT
RBR52%43700#&	4,370	1/2	L, U	T, Q, A, B	R	P	SHA, ULT
RBR52%44200#&	4,420	1/2	L, U	T, Q, A, B	R	P	SHA, ULT
RBR52%44800#&	4,480	1/2	L, U	T, Q, A, B	R	P	SHA, ULT
RBR52%45300#&	4,530	1/2	L, U	T, Q, A, B	R	P	SHA, ULT
RBR52%45900#&	4,590	1/2	L, U	T, Q, A, B	R	P	SHA, ULT
RBR52%46400#&	4,640	1/2	L, U	T, Q, A, B	R	P	SHA, ULT
RBR52%47000#&	4,700	1/2	L, U	T, Q, A, B	R	P	SHA, ULT
RBR52%47500#&	4,750	1/2	L, U	T, Q, A, B	R	P	SHA, ULT
RBR52%48100#&	4,810	1/2	L, U	T, Q, A, B	R	P	SHA, ULT
RBR52%48700#&	4,870	1/2	L, U	T, Q, A, B	R	P	SHA, ULT
RBR52%49300#&	4,930	1/2	L, U	T, Q, A, B	R	P	SHA, ULT
RBR52%49900#&	4,990	1/2	L, U	T, Q, A, B	R	P	SHA, ULT
RBR52%50500#&	5,050	1/2	L, U	T, Q, A, B	R	P	SHA, ULT

RBR52%51100#&	5,110	1/2	L, U	T, Q, A, B	R	P	SHA, ULT
RBR52%51700#&	5,170	1/2	L, U	T, Q, A, B	R	P	SHA, ULT
RBR52%52300#&	5,230	1/2	L, U	T, Q, A, B	R	P	SHA, ULT
RBR52%53000#&	5,300	1/2	L, U	T, Q, A, B	R	P	SHA, ULT
RBR52%53600#&	5,360	1/2	L, U	T, Q, A, B	R	P	SHA, ULT
RBR52%54200#&	5,420	1/2	L, U	T, Q, A, B	R	P	SHA, ULT
RBR52%54900#&	5,490	1/2	L, U	T, Q, A, B	R	P	SHA, ULT
RBR52%55600#&	5,560	1/2	L, U	T, Q, A, B	R	P	SHA, ULT
RBR52%56200#&	5,620	1/2	L, U	T, Q, A, B	R	P	SHA, ULT
RBR52%56900#&	5,690	1/2	L, U	T, Q, A, B	R	P	SHA, ULT
RBR52%57600#&	5,760	1/2	L, U	T, Q, A, B	R	P	SHA, ULT
RBR52%58300#&	5,830	1/2	L, U	T, Q, A, B	R	P	SHA, ULT
RBR52%59000#&	5,900	1/2	L, U	T, Q, A, B	R	P	SHA, ULT
RBR52%59700#&	5,970	1/2	L, U	T, Q, A, B	R	P	SHA, ULT
RBR52%60400#&	6,040	1/2	L, U	T, Q, A, B	R	P	SHA, ULT
RBR52%61200#&	6,120	1/2	L, U	T, Q, A, B	R	P	SHA, ULT
RBR52%61900#&	6,190	1/2	L, U	T, Q, A, B	R	P	SHA, ULT
RBR52%62600#&	6,260	1/2	L, U	T, Q, A, B	R	P	SHA, ULT
RBR52%63400#&	6,340	1/2	L, U	T, Q, A, B	R	P	SHA, ULT
RBR52%64200#&	6,420	1/2	L, U	T, Q, A, B	R	P	SHA, ULT
RBR52%64900#&	6,490	1/2	L, U	T, Q, A, B	R	P	SHA, ULT
RBR52%65700#&	6,570	1/2	L, U	T, Q, A, B	R	P	SHA, ULT
RBR52%66500#&	6,650	1/2	L, U	T, Q, A, B	R	P	SHA, ULT
RBR52%67300#&	6,730	1/2	L, U	T, Q, A, B	R	P	SHA, ULT
RBR52%68100#&	6,810	1/2	L, U	T, Q, A, B	R	P	SHA, ULT
RBR52%69000#&	6,900	1/2	L, U	T, Q, A, B	R	P	SHA, ULT
RBR52%69800#&	6,980	1/2	L, U	T, Q, A, B	R	P	SHA, ULT
RBR52%70600#&	7,060	1/2	L, U	T, Q, A, B	R	P	SHA, ULT
RBR52%71500#&	7,150	1/2	L, U	T, Q, A, B	R	P	SHA, ULT
RBR52%72300#&	7,230	1/2	L, U	T, Q, A, B	R	P	SHA, ULT
RBR52%73200#&	7,320	1/2	L, U	T, Q, A, B	R	P	SHA, ULT
RBR52%74100#&	7,410	1/2	L, U	T, Q, A, B	R	P	SHA, ULT
RBR52%75000#&	7,500	1/2	L, U	T, Q, A, B	R	P	SHA, ULT
RBR52%75900#&	7,590	1/2	L, U	T, Q, A, B	R	P	SHA, ULT
RBR52%76800#&	7,680	1/2	L, U	T, Q, A, B	R	P	SHA, ULT
RBR52%77700#&	7,770	1/2	L, U	T, Q, A, B	R	P	SHA, ULT
RBR52%78700#&	7,870	1/2	L, U	T, Q, A, B	R	P	SHA, ULT
RBR52%79600#&	7,960	1/2	L, U	T, Q, A, B	R	P	SHA, ULT
RBR52%80600#&	8,060	1/2	L, U	T, Q, A, B	R	P	SHA, ULT
RBR52%81600#&	8,160	1/2	L, U	T, Q, A, B	R	P	SHA, ULT
RBR52%82500#&	8,250	1/2	L, U	T, Q, A, B	R	P	SHA, ULT
RBR52%83500#&	8,350	1/2	L, U	T, Q, A, B	R	P	SHA, ULT
RBR52%84500#&	8,450	1/2	L, U	T, Q, A, B	R	P	SHA, ULT
RBR52%85600#&	8,560	1/2	L, U	T, Q, A, B	R	P	SHA, ULT
RBR52%86600#&	8,660	1/2	L, U	T, Q, A, B	R	P	SHA, ULT
RBR52%87600#&	8,760	1/2	L, U	T, Q, A, B	R	P	SHA, ULT
RBR52%88700#&	8,870	1/2	L, U	T, Q, A, B	R	P	SHA, ULT

RBR52%89800#&	8,980	1/2	L, U	T, Q, A, B	R	P	SHA, ULT
RBR52%90900#&	9,090	1/2	L, U	T, Q, A, B	R	P	SHA, ULT
RBR52%92000#&	9,190	1/2	L, U	T, Q, A, B	R	P	SHA, ULT
RBR52%93100#&	9,310	1/2	L, U	T, Q, A, B	R	P	SHA, ULT
RBR52%94200#&	9,420	1/2	L, U	T, Q, A, B	R	P	SHA, ULT
RBR52%95300#&	9,530	1/2	L, U	T, Q, A, B	R	P	SHA, ULT
RBR52%96500#&	9,650	1/2	L, U	T, Q, A, B	R	P	SHA, ULT
RBR52%97600#&	9,760	1/2	L, U	T, Q, A, B	R	P	SHA, ULT
RBR52%98800#&	9,880	1/2	L, U	T, Q, A, B	R	P	SHA, ULT
RBR52%10001#&	10,000	1/2	L, U	T, Q, A, B	R	P	SHA, ULT
RBR52%10101#&	10,100	1/2	L, U	T, Q, A, B	R	P	SHA, ULT
RBR52%10201#&	10,200	1/2	L, U	T, Q, A, B	R	P	SHA, ULT
RBR52%10401#&	10,400	1/2	L, U	T, Q, A, B	R	P	SHA, ULT
RBR52%10501#&	10,500	1/2	L, U	T, Q, A, B	R	P	SHA, ULT
RBR52%10601#&	10,600	1/2	L, U	T, Q, A, B	R	P	SHA, ULT
RBR52%10701#&	10,700	1/2	L, U	T, Q, A, B	R	P	SHA, ULT
RBR52%10901#&	10,900	1/2	L, U	T, Q, A, B	R	P	SHA, ULT
RBR52%11001#&	11,000	1/2	L, U	T, Q, A, B	R	P	SHA, ULT
RBR52%11101#&	11,100	1/2	L, U	T, Q, A, B	R	P	SHA, ULT
RBR52%11301#&	11,300	1/2	L, U	T, Q, A, B	R	P	SHA, ULT
RBR52%11401#&	11,400	1/2	L, U	T, Q, A, B	R	P	SHA, ULT
RBR52%11501#&	11,500	1/2	L, U	T, Q, A, B	R	P	SHA, ULT
RBR52%11701#&	11,700	1/2	L, U	T, Q, A, B	R	P	SHA, ULT
RBR52%11801#&	11,800	1/2	L, U	T, Q, A, B	R	P	SHA, ULT
RBR52%12001#&	12,000	1/2	L, U	T, Q, A, B	R	P	SHA, ULT
RBR52%12101#&	12,100	1/2	L, U	T, Q, A, B	R	P	SHA, ULT
RBR52%12301#&	12,300	1/2	L, U	T, Q, A, B	R	P	SHA, ULT
RBR52%12401#&	12,400	1/2	L, U	T, Q, A, B	R	P	SHA, ULT
RBR52%12601#&	12,600	1/2	L, U	T, Q, A, B	R	P	SHA, ULT
RBR52%12701#&	12,700	1/2	L, U	T, Q, A, B	R	P	SHA, ULT
RBR52%12901#&	12,900	1/2	L, U	T, Q, A, B	R	P	SHA, ULT
RBR52%13001#&	13,000	1/2	L, U	T, Q, A, B	R	P	SHA, ULT
RBR52%13201#&	13,200	1/2	L, U	T, Q, A, B	R	P	SHA, ULT
RBR52%13301#&	13,300	1/2	L, U	T, Q, A, B	R	P	SHA, ULT
RBR52%13501#&	13,500	1/2	L, U	T, Q, A, B	R	P	SHA, ULT
RBR52%13701#&	13,700	1/2	L, U	T, Q, A, B	R	P	SHA, ULT
RBR52%13801#&	13,800	1/2	L, U	T, Q, A, B	R	P	SHA, ULT
RBR52%14001#&	14,000	1/2	L, U	T, Q, A, B	R	P	SHA, ULT
RBR52%14201#&	14,200	1/2	L, U	T, Q, A, B	R	P	SHA, ULT
RBR52%14301#&	14,300	1/2	L, U	T, Q, A, B	R	P	SHA, ULT
RBR52%14501#&	14,500	1/2	L, U	T, Q, A, B	R	P	SHA, ULT
RBR52%14701#&	14,700	1/2	L, U	T, Q, A, B	R	P	SHA, ULT
RBR52%14901#&	14,900	1/2	L, U	T, Q, A, B	R	P	SHA, ULT
RBR52%15001#&	15,000	1/2	L, U	T, Q, A, B	R	P	SHA, ULT
RBR52%15201#&	15,200	1/2	L, U	T, Q, A, B	R	P	SHA, ULT
RBR52%15401#&	15,400	1/2	L, U	T, Q, A, B	R	P	SHA, ULT
RBR52%15601#&	15,600	1/2	L, U	T, Q, A, B	R	P	SHA, ULT

RBR52%15801#&	15,800	1/2	L, U	T, Q, A, B	R	P	SHA, ULT
RBR52%16001#&	16,000	1/2	L, U	T, Q, A, B	R	P	SHA, ULT
RBR52%16201#&	16,200	1/2	L, U	T, Q, A, B	R	P	SHA, ULT
RBR52%16401#&	16,400	1/2	L, U	T, Q, A, B	R	P	SHA, ULT
RBR52%16501#&	16,500	1/2	L, U	T, Q, A, B	R	P	SHA, ULT
RBR52%16701#&	16,700	1/2	L, U	T, Q, A, B	R	P	SHA, ULT
RBR52%16901#&	16,900	1/2	L, U	T, Q, A, B	R	P	SHA, ULT
RBR52%17201#&	17,200	1/2	L, U	T, Q, A, B	R	P	SHA, ULT
RBR52%17401#&	17,400	1/2	L, U	T, Q, A, B	R	P	SHA, ULT
RBR52%17601#&	17,600	1/2	L, U	T, Q, A, B	R	P	SHA, ULT
RBR52%17801#&	17,800	1/2	L, U	T, Q, A, B	R	P	SHA, ULT
RBR52%18001#&	18,000	1/2	L, U	T, Q, A, B	R	P	SHA, ULT
RBR52%18201#&	18,200	1/2	L, U	T, Q, A, B	R	P	SHA, ULT
RBR52%18401#&	18,400	1/2	L, U	T, Q, A, B	R	P	SHA, ULT
RBR52%18701#&	18,700	1/2	L, U	T, Q, A, B	R	P	SHA, ULT
RBR52%18901#&	18,900	1/2	L, U	T, Q, A, B	R	P	SHA, ULT
RBR52%19101#&	19,100	1/2	L, U	T, Q, A, B	R	P	SHA, ULT
RBR52%19301#&	19,300	1/2	L, U	T, Q, A, B	R	P	SHA, ULT
RBR52%19601#&	19,600	1/2	L, U	T, Q, A, B	R	P	SHA, ULT
RBR52%19801#&	19,800	1/2	L, U	T, Q, A, B	R	P	SHA, ULT
RBR52%20001#&	20,000	1/2	L, U	T, Q, A, B	R	P	SHA, ULT
RBR52%20301#&	20,300	1/2	L, U	T, Q, A, B	R	P	SHA, ULT
RBR52%20501#&	20,500	1/2	L, U	T, Q, A, B	R	P	SHA, ULT
RBR52%20801#&	20,800	1/2	L, U	T, Q, A, B	R	P	SHA, ULT
RBR52%21001#&	21,000	1/2	L, U	T, Q, A, B	R	P	SHA, ULT
RBR52%21301#&	21,300	1/2	L, U	T, Q, A, B	R	P	SHA, ULT
RBR52%21501#&	21,500	1/2	L, U	T, Q, A, B	R	P	SHA, ULT
RBR52%21801#&	21,800	1/2	L, U	T, Q, A, B	R	P	SHA, ULT
RBR52%22101#&	22,100	1/2	L, U	T, Q, A, B	R	P	SHA, ULT
RBR52%22301#&	22,300	1/2	L, U	T, Q, A, B	R	P	SHA, ULT
RBR52%22601#&	22,600	1/2	L, U	T, Q, A, B	R	P	SHA, ULT
RBR52%22901#&	22,900	1/2	L, U	T, Q, A, B	R	P	SHA, ULT
RBR52%23201#&	23,200	1/2	L, U	T, Q, A, B	R	P	SHA, ULT
RBR52%23401#&	23,400	1/2	L, U	T, Q, A, B	R	P	SHA, ULT
RBR52%23701#&	23,700	1/2	L, U	T, Q, A, B	R	P	SHA, ULT
RBR52%24001#&	24,000	1/2	L, U	T, Q, A, B	R	P	SHA, ULT
RBR52%24301#&	24,300	1/2	L, U	T, Q, A, B	R	P	SHA, ULT
RBR52%24601#&	24,600	1/2	L, U	T, Q, A, B	R	P	SHA, ULT
RBR52%24901#&	24,900	1/2	L, U	T, Q, A, B	R	P	SHA, ULT
RBR52%25201#&	25,200	1/2	L, U	T, Q, A, B	R	P	SHA, ULT
RBR52%25501#&	25,500	1/2	L, U	T, Q, A, B	R	P	SHA, ULT
RBR52%25801#&	25,800	1/2	L, U	T, Q, A, B	R	P	SHA, ULT
RBR52%26101#&	26,100	1/2	L, U	T, Q, A, B	R	P	SHA, ULT
RBR52%26401#&	26,400	1/2	L, U	T, Q, A, B	R	P	SHA, ULT
RBR52%26701#&	26,700	1/2	L, U	T, Q, A, B	R	P	SHA, ULT
RBR52%27101#&	27,100	1/2	L, U	T, Q, A, B	R	P	SHA, ULT
RBR52%27401#&	27,400	1/2	L, U	T, Q, A, B	R	P	SHA, ULT

RBR52%27701#&	27,700	1/2	L, U	T, Q, A, B	R	P	SHA, ULT
RBR52%28001#&	28,000	1/2	L, U	T, Q, A, B	R	P	SHA, ULT
RBR52%28401#&	28,400	1/2	L, U	T, Q, A, B	R	P	SHA, ULT
RBR52%28701#&	28,700	1/2	L, U	T, Q, A, B	R	P	SHA, ULT
RBR52%29101#&	29,100	1/2	L, U	T, Q, A, B	R	P	SHA, ULT
RBR52%29401#&	29,400	1/2	L, U	T, Q, A, B	R	P	SHA, ULT
RBR52%29801#&	29,800	1/2	L, U	T, Q, A, B	R	P	SHA, ULT
RBR52%30101#&	30,100	1/2	L, U	T, Q, A, B	R	P	SHA, ULT
RBR52%30501#&	30,500	1/2	L, U	T, Q, A, B	R	P	SHA, ULT
RBR52%30901#&	30,900	1/2	L, U	T, Q, A, B	R	P	SHA, ULT
RBR52%31201#&	31,200	1/2	L, U	T, Q, A, B	R	P	SHA, ULT
RBR52%31601#&	31,600	1/2	L, U	T, Q, A, B	R	P	SHA, ULT
RBR52%32001#&	32,000	1/2	L, U	T, Q, A, B	R	P	SHA, ULT
RBR52%32401#&	32,400	1/2	L, U	T, Q, A, B	R	P	SHA, ULT
RBR52%32801#&	32,800	1/2	L, U	T, Q, A, B	R	P	SHA, ULT
RBR52%33201#&	33,200	1/2	L, U	T, Q, A, B	R	P	SHA, ULT
RBR52%33601#&	33,600	1/2	L, U	T, Q, A, B	R	P	SHA, ULT
RBR52%34001#&	34,000	1/2	L, U	T, Q, A, B	R	P	SHA, ULT
RBR52%34401#&	34,400	1/2	L, U	T, Q, A, B	R	P	SHA, ULT
RBR52%34801#&	34,800	1/2	L, U	T, Q, A, B	R	P	SHA, ULT
RBR52%35201#&	35,200	1/2	L, U	T, Q, A, B	R	P	SHA, ULT
RBR52%35701#&	35,700	1/2	L, U	T, Q, A, B	R	P	SHA, ULT
RBR52%36101#&	36,100	1/2	L, U	T, Q, A, B	R	P	SHA, ULT
RBR52%36501#&	36,500	1/2	L, U	T, Q, A, B	R	P	SHA, ULT
RBR52%37001#&	37,000	1/2	L, U	T, Q, A, B	R	P	SHA, ULT
RBR52%37401#&	37,400	1/2	L, U	T, Q, A, B	R	P	SHA, ULT
RBR52%37901#&	37,900	1/2	L, U	T, Q, A, B	R	P	SHA, ULT
RBR52%38301#&	38,300	1/2	L, U	T, Q, A, B	R	P	SHA, ULT
RBR52%38801#&	38,800	1/2	L, U	T, Q, A, B	R	P	SHA, ULT
RBR52%39201#&	39,200	1/2	L, U	T, Q, A, B	R	P	SHA, ULT
RBR52%39701#&	39,700	1/2	L, U	T, Q, A, B	R	P	SHA, ULT
RBR52%40201#&	40,200	1/2	L, U	T, Q, A, B	R	P	SHA, ULT
RBR52%40701#&	40,700	1/2	L, U	T, Q, A, B	R	P	SHA, ULT
RBR52%41201#&	41,200	1/2	L, U	T, Q, A, B	R	P	SHA, ULT
RBR52%41701#&	41,700	1/2	L, U	T, Q, A, B	R	P	SHA, ULT
RBR52%42201#&	42,200	1/2	L, U	T, Q, A, B	R	P	SHA, ULT
RBR52%42701#&	42,700	1/2	L, U	T, Q, A, B	R	P	SHA, ULT
RBR52%43201#&	43,200	1/2	L, U	T, Q, A, B	R	P	SHA, ULT
RBR52%43701#&	43,700	1/2	L, U	T, Q, A, B	R	P	SHA, ULT
RBR52%44201#&	44,200	1/2	L, U	T, Q, A, B	R	P	SHA, ULT
RBR52%44801#&	44,800	1/2	L, U	T, Q, A, B	R	P	SHA, ULT
RBR52%45301#&	45,300	1/2	L, U	T, Q, A, B	R	P	SHA, ULT
RBR52%45901#&	45,900	1/2	L, U	T, Q, A, B	R	P	SHA, ULT
RBR52%46401#&	46,400	1/2	L, U	T, Q, A, B	R	P	SHA, ULT
RBR52%47001#&	47,000	1/2	L, U	T, Q, A, B	R	P	SHA, ULT
RBR52%47501#&	47,500	1/2	L, U	T, Q, A, B	R	P	SHA, ULT
RBR52%48101#&	48,100	1/2	L, U	T, Q, A, B	R	P	SHA, ULT

RBR52%48701#&	48,700	1/2	L, U	T, Q, A, B	R	P	SHA, ULT
RBR52%49301#&	49,300	1/2	L, U	T, Q, A, B	R	P	SHA, ULT
RBR52%49901#&	49,900	1/2	L, U	T, Q, A, B	R	P	SHA, ULT
RBR52%50501#&	50,500	1/2	L, U	T, Q, A, B	R	P	SHA, ULT
RBR52%51101#&	51,100	1/2	L, U	T, Q, A, B	R	P	SHA, ULT
RBR52%51701#&	51,700	1/2	L, U	T, Q, A, B	R	P	SHA, ULT
RBR52%52301#&	52,300	1/2	L, U	T, Q, A, B	R	P	SHA, ULT
RBR52%53001#&	53,000	1/2	L, U	T, Q, A, B	R	P	SHA, ULT
RBR52%53601#&	53,600	1/2	L, U	T, Q, A, B	R	P	SHA, ULT
RBR52%54201#&	54,200	1/2	L, U	T, Q, A, B	R	P	SHA, ULT
RBR52%54901#&	54,900	1/2	L, U	T, Q, A, B	R	P	SHA, ULT
RBR52%55601#&	55,600	1/2	L, U	T, Q, A, B	R	P	SHA, ULT
RBR52%56201#&	56,200	1/2	L, U	T, Q, A, B	R	P	SHA, ULT
RBR52%56901#&	56,900	1/2	L, U	T, Q, A, B	R	P	SHA, ULT
RBR52%57601#&	57,600	1/2	L, U	T, Q, A, B	R	P	SHA, ULT
RBR52%58301#&	58,300	1/2	L, U	T, Q, A, B	R	P	SHA, ULT
RBR52%59001#&	59,000	1/2	L, U	T, Q, A, B	R	P	SHA, ULT
RBR52%59701#&	59,700	1/2	L, U	T, Q, A, B	R	P	SHA, ULT
RBR52%60401#&	60,400	1/2	L, U	T, Q, A, B	R	P	SHA, ULT
RBR52%61201#&	61,200	1/2	L, U	T, Q, A, B	R	P	SHA, ULT
RBR52%61901#&	61,900	1/2	L, U	T, Q, A, B	R	P	SHA, ULT
RBR52%62601#&	62,600	1/2	L, U	T, Q, A, B	R	P	SHA, ULT
RBR52%63401#&	63,400	1/2	L, U	T, Q, A, B	R	P	SHA, ULT
RBR52%64201#&	64,200	1/2	L, U	T, Q, A, B	R	P	SHA, ULT
RBR52%64901#&	64,900	1/2	L, U	T, Q, A, B	R	P	SHA, ULT
RBR52%65701#&	65,700	1/2	L, U	T, Q, A, B	R	P	SHA, ULT
RBR52%66501#&	66,500	1/2	L, U	T, Q, A, B	R	P	SHA, ULT
RBR52%67301#&	67,300	1/2	L, U	T, Q, A, B	R	P	SHA, ULT
RBR52%68101#&	68,100	1/2	L, U	T, Q, A, B	R	P	SHA, ULT
RBR52%69001#&	69,000	1/2	L, U	T, Q, A, B	R	P	SHA, ULT
RBR52%69801#&	69,800	1/2	L, U	T, Q, A, B	R	P	SHA, ULT
RBR52%70601#&	70,600	1/2	L, U	T, Q, A, B	R	P	SHA, ULT
RBR52%71501#&	71,500	1/2	L, U	T, Q, A, B	R	P	SHA, ULT
RBR52%72301#&	72,300	1/2	L, U	T, Q, A, B	R	P	SHA, ULT
RBR52%73201#&	73,200	1/2	L, U	T, Q, A, B	R	P	SHA, ULT
RBR52%74101#&	74,100	1/2	L, U	T, Q, A, B	R	P	SHA, ULT
RBR52%75001#&	75,000	1/2	L, U	T, Q, A, B	R	P	SHA, ULT
RBR52%75901#&	75,900	1/2	L, U	T, Q, A, B	R	P	SHA, ULT
RBR52%76802#&	76,800	1/2	L, U	T, Q, A, B	R	P	SHA, ULT
RBR52%77702#&	77,700	1/2	L, U	T, Q, A, B	R	P	SHA, ULT
RBR52%78702#&	78,700	1/2	L, U	T, Q, A, B	R	P	SHA, ULT
RBR52%79602#&	79,600	1/2	L, U	T, Q, A, B	R	P	SHA, ULT
RBR52%80602#&	80,600	1/2	L, U	T, Q, A, B	R	P	SHA, ULT
RBR52%81602#&	81,600	1/2	L, U	T, Q, A, B	R	P	SHA, ULT
RBR52%82502#&	82,500	1/2	L, U	T, Q, A, B	R	P	SHA, ULT
RBR52%83502#&	83,500	1/2	L, U	T, Q, A, B	R	P	SHA, ULT
RBR52%84502#&	84,500	1/2	L, U	T, Q, A, B	R	P	SHA, ULT

RBR52%85602#&	85,600	1/2	L, U	T, Q, A, B	R	P	SHA, ULT
RBR52%86602#&	86,600	1/2	L, U	T, Q, A, B	R	P	SHA, ULT
RBR52%87602#&	87,600	1/2	L, U	T, Q, A, B	R	P	SHA, ULT
RBR52%88702#&	88,700	1/2	L, U	T, Q, A, B	R	P	SHA, ULT
RBR52%89802#&	89,800	1/2	L, U	T, Q, A, B	R	P	SHA, ULT
RBR52%90902#&	90,900	1/2	L, U	T, Q, A, B	R	P	SHA, ULT
RBR52%92002#&	92,000	1/2	L, U	T, Q, A, B	R	P	SHA, ULT
RBR52%93102#&	93,100	1/2	L, U	T, Q, A, B	R	P	SHA, ULT
RBR52%94202#&	94,200	1/2	L, U	T, Q, A, B	R	P	SHA, ULT
RBR52%95302#&	95,300	1/2	L, U	T, Q, A, B	R	P	SHA, ULT
RBR52%96502#&	96,500	1/2	L, U	T, Q, A, B	R	P	SHA, ULT
RBR52%97602#&	97,600	1/2	L, U	T, Q, A, B	R	P	SHA, ULT
RBR52%98802#&	98,800	1/2	L, U	T, Q, A, B	R	P	SHA, ULT
RBR52%10002#&	100,000	1/2	L, U	T, Q, A, B	R	P	SHA, ULT
RBR52%10102#&	101,000	1/2	L, U	T, Q, A, B	R	P	SHA, ULT
RBR52%10202#&	102,000	1/2	L, U	T, Q, A, B	R	P	SHA, ULT
RBR52%10402#&	104,000	1/2	L, U	T, Q, A, B	R	P	SHA, ULT
RBR52%10502#&	105,000	1/2	L, U	T, Q, A, B	R	P	SHA, ULT
RBR52%10602#&	106,000	1/2	L, U	T, Q, A, B	R	P	SHA, ULT
RBR52%10702#&	107,000	1/2	L, U	T, Q, A, B	R	P	SHA, ULT
RBR52%10902#&	109,000	1/2	L, U	T, Q, A, B	R	P	SHA, ULT
RBR52%11002#&	110,000	1/2	L, U	T, Q, A, B	R	P	SHA, ULT
RBR52%11102#&	111,000	1/2	L, U	T, Q, A, B	R	P	SHA, ULT
RBR52%11302#&	113,000	1/2	L, U	T, Q, A, B	R	P	SHA, ULT
RBR52%11402#&	114,000	1/2	L, U	T, Q, A, B	R	P	SHA, ULT
RBR52%11502#&	115,000	1/2	L, U	T, Q, A, B	R	P	SHA, ULT
RBR52%11702#&	117,000	1/2	L, U	T, Q, A, B	R	P	SHA, ULT
RBR52%11802#&	118,000	1/2	L, U	T, Q, A, B	R	P	SHA, ULT
RBR52%12002#&	120,000	1/2	L, U	T, Q, A, B	R	P	SHA, ULT
RBR52%12102#&	121,000	1/2	L, U	T, Q, A, B	R	P	SHA, ULT
RBR52%12302#&	123,000	1/2	L, U	T, Q, A, B	R	P	SHA, ULT
RBR52%12402#&	124,000	1/2	L, U	T, Q, A, B	R	P	SHA, ULT
RBR52%12602#&	126,000	1/2	L, U	T, Q, A, B	R	P	SHA, ULT
RBR52%12702#&	127,000	1/2	L, U	T, Q, A, B	R	P	SHA, ULT
RBR52%12902#&	129,000	1/2	L, U	T, Q, A, B	R	P	SHA, ULT
RBR52%13002#&	130,000	1/2	L, U	T, Q, A, B	R	P	SHA, ULT
RBR52%13202#&	132,000	1/2	L, U	T, Q, A, B	R	P	SHA, ULT
RBR52%13302#&	133,000	1/2	L, U	T, Q, A, B	R	P	SHA, ULT
RBR52%13502#&	135,000	1/2	L, U	T, Q, A, B	R	P	SHA, ULT
RBR52%13702#&	137,000	1/2	L, U	T, Q, A, B	R	P	SHA, ULT
RBR52%13802#&	138,000	1/2	L, U	T, Q, A, B	R	P	SHA, ULT
RBR52%14002#&	140,000	1/2	L, U	T, Q, A, B	R	P	SHA, ULT
RBR52%14202#&	142,000	1/2	L, U	T, Q, A, B	R	P	SHA, ULT
RBR52%14302#&	143,000	1/2	L, U	T, Q, A, B	R	P	SHA, ULT
RBR52%14502#&	145,000	1/2	L, U	T, Q, A, B	R	P	SHA, ULT
RBR52%14702#&	147,000	1/2	L, U	T, Q, A, B	R	P	SHA, ULT
RBR52%14902#&	149,000	1/2	L, U	T, Q, A, B	R	P	SHA, ULT

RBR52%15002#&	150,000	1/2	L, U	T, Q, A, B	R	P	SHA, ULT
RBR52%15202#&	152,000	1/2	L, U	T, Q, A, B	R	P	SHA, ULT
RBR52%15402#&	154,000	1/2	L, U	T, Q, A, B	R	P	SHA, ULT
RBR52%15602#&	156,000	1/2	L, U	T, Q, A, B	R	P	SHA, ULT
RBR52%15802#&	158,000	1/2	L, U	T, Q, A, B	R	P	SHA, ULT
RBR52%16002#&	160,000	1/2	L, U	T, Q, A, B	R	P	SHA, ULT
RBR52%16202#&	162,000	1/2	L, U	T, Q, A, B	R	P	SHA, ULT
RBR52%16402#&	164,000	1/2	L, U	T, Q, A, B	R	P	SHA, ULT
RBR52%16502#&	165,000	1/2	L, U	T, Q, A, B	R	P	SHA, ULT
RBR52%16702#&	167,000	1/2	L, U	T, Q, A, B	R	P	SHA, ULT
RBR52%16902#&	169,000	1/2	L, U	T, Q, A, B	R	P	SHA, ULT
RBR52%17202#&	172,000	1/2	L, U	T, Q, A, B	R	P	SHA, ULT
RBR52%17402#&	174,000	1/2	L, U	T, Q, A, B	R	P	SHA, ULT
RBR52%17602#&	176,000	1/2	L, U	T, Q, A, B	R	P	SHA, ULT
RBR52%17802#&	178,000	1/2	L, U	T, Q, A, B	R	P	SHA, ULT
RBR52%18002#&	180,000	1/2	L, U	T, Q, A, B	R	P	SHA, ULT
RBR52%18202#&	182,000	1/2	L, U	T, Q, A, B	R	P	SHA, ULT
RBR52%18402#&	184,000	1/2	L, U	T, Q, A, B	R	P	SHA, ULT
RBR52%18702#&	187,000	1/2	L, U	T, Q, A, B	R	P	SHA, ULT
RBR52%18902#&	189,000	1/2	L, U	T, Q, A, B	R	P	SHA, ULT
RBR52%19102#&	191,000	1/2	L, U	T, Q, A, B	R	P	SHA, ULT
RBR52%19302#&	193,000	1/2	L, U	T, Q, A, B	R	P	SHA, ULT
RBR52%19602#&	196,000	1/2	L, U	T, Q, A, B	R	P	SHA, ULT
RBR52%19802#&	198,000	1/2	L, U	T, Q, A, B	R	P	SHA, ULT
RBR52%20002#&	200,000	1/2	L, U	T, Q, A, B	R	P	SHA, ULT
RBR52%20302#&	203,000	1/2	L, U	T, Q, A, B	R	P	SHA, ULT
RBR52%20502#&	205,000	1/2	L, U	T, Q, A, B	R	P	SHA, ULT
RBR52%20802#&	208,000	1/2	L, U	T, Q, A, B	R	P	SHA, ULT
RBR52%21002#&	210,000	1/2	L, U	T, Q, A, B	R	P	SHA, ULT
RBR52%21302#&	213,000	1/2	L, U	T, Q, A, B	R	P	SHA, ULT
RBR52%21502#&	215,000	1/2	L, U	T, Q, A, B	R	P	SHA, ULT
RBR52%21802#&	218,000	1/2	L, U	T, Q, A, B	R	P	SHA, ULT
RBR52%22102#&	221,000	1/2	L, U	T, Q, A, B	R	P	SHA, ULT
RBR52%22302#&	223,000	1/2	L, U	T, Q, A, B	R	P	SHA, ULT
RBR52%22602#&	226,000	1/2	L, U	T, Q, A, B	R	P	SHA, ULT
RBR52%22902#&	229,000	1/2	L, U	T, Q, A, B	R	P	SHA, ULT
RBR52%23202#&	232,000	1/2	L, U	T, Q, A, B	R	P	SHA, ULT
RBR52%23402#&	234,000	1/2	L, U	T, Q, A, B	R	P	SHA, ULT
RBR52%23702#&	237,000	1/2	L, U	T, Q, A, B	R	P	SHA, ULT
RBR52%24002#&	240,000	1/2	L, U	T, Q, A, B	R	P	SHA, ULT
RBR52%24302#&	243,000	1/2	L, U	T, Q, A, B	R	P	SHA, ULT
RBR52%24602#&	246,000	1/2	L, U	T, Q, A, B	R	P	SHA, ULT
RBR52%24902#&	249,000	1/2	L, U	T, Q, A, B	R	P	SHA, ULT
RBR52%25202#&	252,000	1/2	L, U	T, Q, A, B	R	P	SHA, ULT
RBR52%25502#&	255,000	1/2	L, U	T, Q, A, B	R	P	SHA, ULT
RBR52%25802#&	258,000	1/2	L, U	T, Q, A, B	R	P	SHA, ULT
RBR52%26102#&	261,000	1/2	L, U	T, Q, A, B	R	P	SHA, ULT

RBR52%26402#&	264,000	1/2	L, U	T, Q, A, B	R	P	SHA, ULT
RBR52%26702#&	267,000	1/2	L, U	T, Q, A, B	R	P	SHA, ULT
RBR52%27102#&	271,000	1/2	L, U	T, Q, A, B	R	P	SHA, ULT
RBR52%27402#&	274,000	1/2	L, U	T, Q, A, B	R	P	SHA, ULT
RBR52%27702#&	277,000	1/2	L, U	T, Q, A, B	R	P	SHA, ULT
RBR52%28002#&	280,000	1/2	L, U	T, Q, A, B	R	P	SHA, ULT
RBR52%28402#&	284,000	1/2	L, U	T, Q, A, B	R	P	SHA, ULT
RBR52%28702#&	287,000	1/2	L, U	T, Q, A, B	R	P	SHA, ULT
RBR52%29102#&	291,000	1/2	L, U	T, Q, A, B	R	P	SHA, ULT
RBR52%29402#&	294,000	1/2	L, U	T, Q, A, B	R	P	SHA, ULT
RBR52%29802#&	298,000	1/2	L, U	T, Q, A, B	R	P	SHA, ULT
RBR52%30102#&	301,000	1/2	L, U	T, Q, A, B	R	P	SHA, ULT
RBR52%30502#&	305,000	1/2	L, U	T, Q, A, B	R	P	SHA, ULT
RBR52%30902#&	309,000	1/2	L, U	T, Q, A, B	R	P	SHA, ULT
RBR52%31202#&	312,000	1/2	L, U	T, Q, A, B	R	P	SHA, ULT
RBR52%31602#&	316,000	1/2	L, U	T, Q, A, B	R	P	SHA, ULT
RBR52%32002#&	320,000	1/2	L, U	T, Q, A, B	R	P	SHA, ULT
RBR52%32402#&	324,000	1/2	L, U	T, Q, A, B	R	P	SHA, ULT
RBR52%32802#&	328,000	1/2	L, U	T, Q, A, B	R	P	SHA, ULT
RBR52%33202#&	332,000	1/2	L, U	T, Q, A, B	R	P	SHA, ULT
RBR52%33602#&	336,000	1/2	L, U	T, Q, A, B	R	P	SHA, ULT
RBR52%34002#&	340,000	1/2	L, U	T, Q, A, B	R	P	SHA, ULT
RBR52%34402#&	344,000	1/2	L, U	T, Q, A, B	R	P	SHA, ULT
RBR52%34802#&	348,000	1/2	L, U	T, Q, A, B	R	P	SHA, ULT
RBR52%35202#&	352,000	1/2	L, U	T, Q, A, B	R	P	SHA, ULT
RBR52%35702#&	357,000	1/2	L, U	T, Q, A, B	R	P	SHA, ULT
RBR52%36102#&	361,000	1/2	L, U	T, Q, A, B	R	P	SHA, ULT
RBR52%36502#&	365,000	1/2	L, U	T, Q, A, B	R	P	SHA, ULT
RBR52%37002#&	370,000	1/2	L, U	T, Q, A, B	R	P	SHA, ULT
RBR52%37402#&	374,000	1/2	L, U	T, Q, A, B	R	P	SHA, ULT
RBR52%37902#&	379,000	1/2	L, U	T, Q, A, B	R	P	SHA, ULT
RBR52%38302#&	383,000	1/2	L, U	T, Q, A, B	R	P	SHA, ULT
RBR52%38802#&	388,000	1/2	L, U	T, Q, A, B	R	P	SHA, ULT
RBR52%39202#&	392,000	1/2	L, U	T, Q, A, B	R	P	SHA, ULT
RBR52%39702#&	397,000	1/2	L, U	T, Q, A, B	R	P	SHA, ULT
RBR52%40202#&	402,000	1/2	L, U	T, Q, A, B	R	P	SHA, ULT
RBR52%40702#&	407,000	1/2	L, U	T, Q, A, B	R	P	SHA, ULT
RBR52%41202#&	412,000	1/2	L, U	T, Q, A, B	R	P	SHA, ULT
RBR52%41702#&	417,000	1/2	L, U	T, Q, A, B	R	P	SHA, ULT
RBR52%42202#&	422,000	1/2	L, U	T, Q, A, B	R	P	SHA, ULT
RBR52%42702#&	427,000	1/2	L, U	T, Q, A, B	R	P	SHA, ULT
RBR52%43202#&	432,000	1/2	L, U	T, Q, A, B	R	P	SHA, ULT
RBR52%43702#&	437,000	1/2	L, U	T, Q, A, B	R	P	SHA, ULT
RBR52%44202#&	442,000	1/2	L, U	T, Q, A, B	R	P	SHA, ULT
RBR52%44802#&	448,000	1/2	L, U	T, Q, A, B	R	P	SHA, ULT
RBR52%45302#&	453,000	1/2	L, U	T, Q, A, B	R	P	SHA, ULT
RBR52%45902#&	459,000	1/2	L, U	T, Q, A, B	R	P	SHA, ULT

RBR52%46402#&	464,000	1/2	L, U	T, Q, A, B	R	P	SHA, ULT
RBR52%47002#&	470,000	1/2	L, U	T, Q, A, B	R	P	SHA, ULT
RBR52%47502#&	475,000	1/2	L, U	T, Q, A, B	R	P	SHA, ULT
RBR52%48102#&	481,000	1/2	L, U	T, Q, A, B	R	P	SHA, ULT
RBR52%48702#&	487,000	1/2	L, U	T, Q, A, B	R	P	SHA, ULT
RBR52%49302#&	493,000	1/2	L, U	T, Q, A, B	R	P	SHA, ULT
RBR52%49902#&	499,000	1/2	L, U	T, Q, A, B	R	P	SHA, ULT
RBR52%50502#&	505,000	1/2	L, U	T, Q, A, B	R	P	SHA, ULT
RBR52%51102#&	511,000	1/2	L, U	T, Q, A, B	R	P	SHA, ULT
RBR52%51702#&	517,000	1/2	L, U	T, Q, A, B	R	P	SHA, ULT
RBR52%52302#&	523,000	1/2	L, U	T, Q, A, B	R	P	SHA, ULT
RBR52%53002#&	530,000	1/2	L, U	T, Q, A, B	R	P	SHA, ULT
RBR52%53602#&	536,000	1/2	L, U	T, Q, A, B	R	P	SHA, ULT
RBR52%54202#&	542,000	1/2	L, U	T, Q, A, B	R	P	SHA, ULT
RBR52%54902#&	549,000	1/2	L, U	T, Q, A, B	R	P	SHA, ULT
RBR52%55602#&	556,000	1/2	L, U	T, Q, A, B	R	P	SHA, ULT
RBR52%56202#&	562,000	1/2	L, U	T, Q, A, B	R	P	SHA, ULT
RBR52%56902#&	569,000	1/2	L, U	T, Q, A, B	R	P	SHA, ULT
RBR52%57602#&	576,000	1/2	L, U	T, Q, A, B	R	P	SHA, ULT
RBR52%58302#&	583,000	1/2	L, U	T, Q, A, B	R	P	SHA, ULT
RBR52%59002#&	590,000	1/2	L, U	T, Q, A, B	R	P	SHA, ULT
RBR52%59702#&	597,000	1/2	L, U	T, Q, A, B	R	P	SHA, ULT
RBR52%60402#&	604,000	1/2	L, U	T, Q, A, B	R	P	SHA, ULT
RBR52%61202#&	612,000	1/2	L, U	T, Q, A, B	R	P	SHA, ULT
RBR52%61902#&	619,000	1/2	L, U	T, Q, A, B	R	P	SHA, ULT
RBR52%62602#&	626,000	1/2	L, U	T, Q, A, B	R	P	SHA, ULT
RBR52%63402#&	634,000	1/2	L, U	T, Q, A, B	R	P	SHA, ULT
RBR52%64202#&	642,000	1/2	L, U	T, Q, A, B	R	P	SHA, ULT
RBR52%64902#&	649,000	1/2	L, U	T, Q, A, B	R	P	SHA, ULT
RBR52%65702#&	657,000	1/2	L, U	T, Q, A, B	R	P	SHA, ULT
RBR52%66502#&	665,000	1/2	L, U	T, Q, A, B	R	P	SHA, ULT
RBR52%67302#&	673,000	1/2	L, U	T, Q, A, B	R	P	SHA, ULT
RBR52%68102#&	681,000	1/2	L, U	T, Q, A, B	R	P	SHA, ULT
RBR52%69002#&	690,000	1/2	L, U	T, Q, A, B	R	P	SHA, ULT
RBR52%69802#&	698,000	1/2	L, U	T, Q, A, B	R	P	SHA, ULT
RBR52%70602#&	706,000	1/2	L, U	T, Q, A, B	R	P	SHA, ULT
RBR52%71502#&	715,000	1/2	L, U	T, Q, A, B	R	P	SHA, ULT
RBR52%72302#&	723,000	1/2	L, U	T, Q, A, B	R	P	SHA, ULT
RBR52%73202#&	732,000	1/2	L, U	T, Q, A, B	R	P	SHA, ULT
RBR52%74102#&	741,000	1/2	L, U	T, Q, A, B	R	P	SHA, ULT
RBR52%75002#&	750,000	1/2	L, U	T, Q, A, B	R	P	SHA, ULT
RBR52%75902#&	759,000	1/2	L, U	T, Q, A, B	R	P	SHA, ULT
RBR52%76802#&	768,000	1/2	L, U	T, Q, A, B	R	P	SHA, ULT
RBR52%77702#&	777,000	1/2	L, U	T, Q, A, B	R	P	SHA, ULT
RBR52%78702#&	787,000	1/2	L, U	T, Q, A, B	R	P	SHA, ULT
RBR52%79602#&	796,000	1/2	L, U	T, Q, A, B	R	P	SHA, ULT
RBR52%80602#&	806,000	1/2	L, U	T, Q, A, B	R	P	SHA, ULT

RBR52%81602#&	816,000	1/2	L, U	T, Q, A, B	R	P	SHA, ULT
RBR52%82502#&	825,000	1/2	L, U	T, Q, A, B	R	P	SHA, ULT
RBR52%83502#&	835,000	1/2	L, U	T, Q, A, B	R	P	SHA, ULT
RBR52%84502#&	845,000	1/2	L, U	T, Q, A, B	R	P	SHA, ULT
RBR52%85602#&	856,000	1/2	L, U	T, Q, A, B	R	P	SHA, ULT
RBR52%86602#&	866,000	1/2	L, U	T, Q, A, B	R	P	SHA, ULT
RBR52%87602#&	876,000	1/2	L, U	T, Q, A, B	R	P	SHA, ULT
RBR52%88702#&	887,000	1/2	L, U	T, Q, A, B	R	P	SHA, ULT
RBR52%89802#&	898,000	1/2	L, U	T, Q, A, B	R	P	SHA, ULT
RBR52%90902#&	909,000	1/2	L, U	T, Q, A, B	R	P	SHA, ULT
RBR52%92002#&	920,000	1/2	L, U	T, Q, A, B	R	P	SHA, ULT
RBR52%93102#&	931,000	1/2	L, U	T, Q, A, B	R	P	SHA, ULT
RBR52%94202#&	942,000	1/2	L, U	T, Q, A, B	R	P	SHA, ULT
RBR52%95302#&	953,000	1/2	L, U	T, Q, A, B	R	P	SHA, ULT
RBR52%96502#&	965,000	1/2	L, U	T, Q, A, B	R	P	SHA, ULT
RBR52%97602#&	976,000	1/2	L, U	T, Q, A, B	R	P	SHA, ULT
RBR52%98802#&	988,000	1/2	L, U	T, Q, A, B	R	P	SHA, ULT
RBR52%10003#&	1,000,000	1/2	L, U	T, Q, A, B	R	P	SHA, ULT
RBR52%10103#&	1,010,000	1/2	L, U	T, Q, A, B	R	P	SHA, ULT
RBR52%10203#&	1,020,000	1/2	L, U	T, Q, A, B	R	P	SHA, ULT
RBR52%10403#&	1,040,000	1/2	L, U	T, Q, A, B	R	P	SHA, ULT
RBR52%10503#&	1,050,000	1/2	L, U	T, Q, A, B	R	P	SHA, ULT
RBR52%10603#&	1,060,000	1/2	L, U	T, Q, A, B	R	P	SHA, ULT
RBR52%10703#&	1,070,000	1/2	L, U	T, Q, A, B	R	P	SHA, ULT
RBR52%10903#&	1,090,000	1/2	L, U	T, Q, A, B	R	P	SHA, ULT
RBR52%11003#&	1,100,000	1/2	L, U	T, Q, A, B	R	P	SHA, ULT
RBR52%11103#&	1,110,000	1/2	L, U	T, Q, A, B	R	P	SHA, ULT
RBR52%11303#&	1,130,000	1/2	L, U	T, Q, A, B	R	P	SHA, ULT
RBR52%11403#&	1,140,000	1/2	L, U	T, Q, A, B	R	P	SHA, ULT
RBR52%11503#&	1,150,000	1/2	L, U	T, Q, A, B	R	P	SHA, ULT
RBR52%11703#&	1,170,000	1/2	L, U	T, Q, A, B	R	P	SHA, ULT
RBR52%11803#&	1,180,000	1/2	L, U	T, Q, A, B	R	P	SHA, ULT
RBR52%12003#&	1,200,000	1/2	L, U	T, Q, A, B	R	P	SHA, ULT
RBR52%12103#&	1,210,000	1/2	L, U	T, Q, A, B	R	P	SHA, ULT

RBR52 RESISTORS DECADE BREAKDOWN

Click on the link below to see the associated parts selection listing:

Resistance Range
10.00 Ohms through 98.80 Ohms
100.0 Ohms through 988.0 Ohms
1,000 Ohms through 9,880 Ohms
10,000 Ohms through 98,800 Ohms
100,000 Ohms through 988,000 Ohms
1,000,000 Ohms through 1,210,000 Ohms

RBR52 Wirewound Resistors: 10.00 Ohms through 98.80 Ohms

	Resistance	Power	Terminal	Resistance	Level 1	Level 2	
Part Number	Value (Ohms)	Rating (W)	Characteristic (#)	Tolerance (%)	(FRL)(&)	(FRL)(&)	Manufacturer
RBR52#10R00%&	10.00	1/2	L, U	T, Q, A, B	R	P	SHA
RBR52#10R10%&	10.10	1/2	L, U	T, Q, A, B	R	P	SHA
RBR52#10R20%&	10.20	1/2	L, U	T, Q, A, B	R	P	SHA
RBR52#10R40%&	10.40	1/2	L, U	T, Q, A, B	R	P	SHA
RBR52#10R50%&	10.50	1/2	L, U	T, Q, A, B	R	P	SHA
RBR52#10R60%&	10.60	1/2	L, U	T, Q, A, B	R	P	SHA
RBR52#10R70%&	10.70	1/2	L, U	T, Q, A, B	R	P	SHA
RBR52#10R90%&	10.90	1/2	L, U	T, Q, A, B	R	P	SHA
RBR52#11R00%&	11.00	1/2	L, U	T, Q, A, B	R	P	SHA
RBR52#11R10%&	11.10	1/2	L, U	T, Q, A, B	R	P	SHA
RBR52#11R30%&	11.30	1/2	L, U	T, Q, A, B	R	P	SHA
RBR52#11R40%&	11.40	1/2	L, U	T, Q, A, B	R	P	SHA
RBR52#11R50%&	11.50	1/2	L, U	T, Q, A, B	R	P	SHA
RBR52#11R70%&	11.70	1/2	L, U	T, Q, A, B	R	P	SHA
	Resistance	Power	Terminal	Resistance	Level 1	Level 2	
Part Number	Value (Ohms)	Rating (W)	Characteristic (#)	Tolerance (%)	(FRL)(&)	(FRL)(&)	Manufacturer
RBR52#12R10%&	12.10	1/2	L, U	T, Q, A, B	R	P	SHA
RBR52#12R30%&	12.30	1/2	L, U	T, Q, A, B	R	P	SHA
RBR52#12R40%&	12.40	1/2	L, U	T, Q, A, B	R	P	SHA
RBR52#12R60%&	12.60	1/2	L, U	T, Q, A, B	R	P	SHA
RBR52#12R70%&	12.70	1/2	L, U	T, Q, A, B	R	P	SHA
RBR52#12R90%&	12.90	1/2	L, U	T, Q, A, B	R	P	SHA
RBR52#13R00%&	13.00	1/2	L, U	T, Q, A, B	R	P	SHA
RBR52#13R20%&	13.20	1/2	L, U	T, Q, A, B	R	P	SHA
RBR52#13R30%&	13.30	1/2	L, U	T, Q, A, B	R	P	SHA
RBR52#13R50%&	13.50	1/2	L, U	T, Q, A, B	R	P	SHA
RBR52#13R70%&	13.70	1/2	L, U	T, Q, A, B	R	P	SHA
RBR52#13R80%&	13.80	1/2	L, U	T, Q, A, B	R	P	SHA
RBR52#14R00%&	14.00	1/2	L, U	T, Q, A, B	R	P	SHA
	Resistance	Power	Terminal	Resistance	Level 1	Level 2	
Part Number	Value (Ohms)	Rating (W)	Characteristic (#)	Tolerance (%)	(FRL)(&)	(FRL)(&)	Manufacturer
RBR52#14R50%&	14.50	1/2	L, U	T, Q, A, B	R	P	SHA
RBR52#14R70%&	14.70	1/2	L, U	T, Q, A, B	R	P	SHA
RBR52#14R90%&	14.90	1/2	L, U	T, Q, A, B	R	P	SHA
RBR52#15R00%&	15.00	1/2	L, U	T, Q, A, B	R	P	SHA
RBR52#15R20%&	15.20	1/2	L, U	T, Q, A, B	R	P	SHA
RBR52#15R40%&	15.40	1/2	L, U	T, Q, A, B	R	P	SHA
RBR52#15R60%&	15.60	1/2	L, U	T, Q, A, B	R	P	SHA
RBR52#15R80%&	15.80	1/2	L, U	T, Q, A, B	R	P	SHA
RBR52#16R00%&	16.00	1/2	L, U	T, Q, A, B	R	P	SHA

RBR52#16R20%&	16.20	1/2	L, U	T, Q, A, B	R	P	SHA
RBR52#16R40%&	16.40	1/2	L, U	T, Q, A, B	R	P	SHA
RBR52#16R50%&	16.50	1/2	L, U	T, Q, A, B	R	P	SHA
RBR52#16R70%&	16.70	1/2	L, U	T, Q, A, B	R	P	SHA
	Resistance	Power	Terminal	Resistance	Level 1	Level 2	
Part Number	Value (Ohms)	Rating (W)	Characteristic (#)	Tolerance (%)	(FRL)(&)	(FRL)(&)	Manufacturer
RBR52#17R40%&	17.40	1/2	L, U	T, Q, A, B	R	P	SHA
RBR52#17R60%&	17.60	1/2	L, U	T, Q, A, B	R	P	SHA
RBR52#17R80%&	17.80	1/2	L, U	T, Q, A, B	R	P	SHA
RBR52#18R00%&	18.00	1/2	L, U	T, Q, A, B	R	P	SHA
RBR52#18R20%&	18.20	1/2	L, U	T, Q, A, B	R	P	SHA
RBR52#18R40%&	18.40	1/2	L, U	T, Q, A, B	R	P	SHA
RBR52#18R70%&	18.70	1/2	L, U	T, Q, A, B	R	P	SHA
RBR52#18R90%&	18.90	1/2	L, U	T, Q, A, B	R	P	SHA
RBR52#19R10%&	19.10	1/2	L, U	T, Q, A, B	R	P	SHA
RBR52#19R30%&	19.30	1/2	L, U	T, Q, A, B	R	P	SHA
RBR52#19R60%&	19.60	1/2	L, U	T, Q, A, B	R	P	SHA
RBR52#19R80%&	19.80	1/2	L, U	T, Q, A, B	R	P	SHA
RBR52#20R00%&	20.00	1/2	L, U	T, Q, A, B	R	P	SHA
	Resistance	Power	Terminal	Resistance	Level 1	Level 2	
Part Number	Value (Ohms)	Rating (W)	Characteristic (#)	Tolerance (%)	(FRL)(&)	(FRL)(&)	Manufacturer
RBR52#20R80%&	20.80	1/2	L, U	T, Q, A, B	R	P	SHA
RBR52#21R00%&	21.00	1/2	L, U	T, Q, A, B	R	P	SHA
RBR52#21R30%&	21.30	1/2	L, U	T, Q, A, B	R	P	SHA
RBR52#21R50%&	21.50	1/2	L, U	T, Q, A, B	R	P	SHA
RBR52#21R80%&	21.80	1/2	L, U	T, Q, A, B	R	P	SHA
RBR52#22R10%&	22.10	1/2	L, U	T, Q, A, B	R	P	SHA
RBR52#22R30%&	22.30	1/2	L, U	T, Q, A, B	R	P	SHA
RBR52#22R60%&	22.60	1/2	L, U	T, Q, A, B	R	P	SHA
RBR52#22R90%&	22.90	1/2	L, U	T, Q, A, B	R	P	SHA
RBR52#23R20%&	23.20	1/2	L, U	T, Q, A, B	R	P	SHA
RBR52#23R40%&	23.40	1/2	L, U	T, Q, A, B	R	P	SHA
RBR52#23R70%&	23.70	1/2	L, U	T, Q, A, B	R	P	SHA
RBR52#24R00%&	24.00	1/2	L, U	T, Q, A, B	R	P	SHA
	Resistance	Power	Terminal	Resistance	Level 1	Level 2	
Part Number	Value (Ohms)	Rating (W)	Characteristic (#)	Tolerance (%)	(FRL)(&)	(FRL)(&)	Manufacturer
RBR52#24R90%&	24.90	1/2	L, U	T, Q, A, B	R	P	SHA
RBR52#25R20%&	25.20	1/2	L, U	T, Q, A, B	R	P	SHA
RBR52#25R50%&	25.50	1/2	L, U	T, Q, A, B	R	P	SHA
RBR52#25R80%&	25.80	1/2	L, U	T, Q, A, B	R	P	SHA
RBR52#26R10%&	26.10	1/2	L, U	T, Q, A, B	R	P	SHA
RBR52#26R40%&	26.40	1/2	L, U	T, Q, A, B	R	P	SHA
RBR52#26R70%&	26.70	1/2	L, U	T, Q, A, B	R	P	SHA
RBR52#27R10%&	27.10	1/2	L, U	T, Q, A, B	R	P	SHA
RBR52#27R40%&	27.40	1/2	L, U	T, Q, A, B	R	P	SHA
RBR52#27R70%&	27.70	1/2	L, U	T, Q, A, B	R	P	SHA
RBR52#28R00%&	28.00	1/2	L, U	T, Q, A, B	R	P	SHA

RBR52#28R40%&	28.40	1/2	L, U	T, Q, A, B	R	P	SHA
RBR52#28R70%&	28.70	1/2	L, U	T, Q, A, B	R	P	SHA
	Resistance	Power	Terminal	Resistance	Level 1	Level 2	
Part Number	Value (Ohms)	Rating (W)	Characteristic (#)	Tolerance (%)	(FRL)(&)	(FRL)(&)	Manufacturer
RBR52#29R80%&	29.80	1/2	L, U	T, Q, A, B	R	P	SHA
RBR52#30R10%&	30.10	1/2	L, U	T, Q, A, B	R	P	SHA
RBR52#30R50%&	30.50	1/2	L, U	T, Q, A, B	R	P	SHA
RBR52#30R90%&	30.90	1/2	L, U	T, Q, A, B	R	P	SHA
RBR52#31R20%&	31.20	1/2	L, U	T, Q, A, B	R	P	SHA
RBR52#31R60%&	31.60	1/2	L, U	T, Q, A, B	R	P	SHA
RBR52#32R00%&	32.00	1/2	L, U	T, Q, A, B	R	P	SHA
RBR52#32R40%&	32.40	1/2	L, U	T, Q, A, B	R	P	SHA
RBR52#32R80%&	32.80	1/2	L, U	T, Q, A, B	R	P	SHA
RBR52#33R20%&	33.20	1/2	L, U	T, Q, A, B	R	P	SHA
RBR52#33R60%&	33.60	1/2	L, U	T, Q, A, B	R	P	SHA
RBR52#34R00%&	34.00	1/2	L, U	T, Q, A, B	R	P	SHA
RBR52#34R40%&	34.40	1/2	L, U	T, Q, A, B	R	P	SHA
	Resistance	Power	Terminal	Resistance	Level 1	Level 2	
Part Number	Value (Ohms)	Rating (W)	Characteristic (#)	Tolerance (%)	(FRL)(&)	(FRL)(&)	Manufacturer
RBR52#35R70%&	35.70	1/2	L, U	T, Q, A, B	R	P	SHA
RBR52#36R10%&	36.10	1/2	L, U	T, Q, A, B	R	P	SHA
RBR52#36R50%&	36.50	1/2	L, U	T, Q, A, B	R	P	SHA
RBR52#37R00%&	37.00	1/2	L, U	T, Q, A, B	R	P	SHA
RBR52#37R40%&	37.40	1/2	L, U	T, Q, A, B	R	P	SHA
RBR52#37R90%&	37.90	1/2	L, U	T, Q, A, B	R	P	SHA
RBR52#38R30%&	38.30	1/2	L, U	T, Q, A, B	R	P	SHA
RBR52#38R80%&	38.80	1/2	L, U	T, Q, A, B	R	P	SHA
RBR52#39R20%&	39.20	1/2	L, U	T, Q, A, B	R	P	SHA
RBR52#39R70%&	39.70	1/2	L, U	T, Q, A, B	R	P	SHA
RBR52#40R20%&	40.20	1/2	L, U	T, Q, A, B	R	P	SHA
RBR52#40R70%&	40.70	1/2	L, U	T, Q, A, B	R	P	SHA
RBR52#41R20%&	41.20	1/2	L, U	T, Q, A, B	R	P	SHA
	Resistance	Power	Terminal	Resistance	Level 1	Level 2	
Part Number	Value (Ohms)	Rating (W)	Characteristic (#)	Tolerance (%)	(FRL)(&)	(FRL)(&)	Manufacturer
RBR52#42R70%&	42.70	1/2	L, U	T, Q, A, B	R	P	SHA
RBR52#43R20%&	43.20	1/2	L, U	T, Q, A, B	R	P	SHA
RBR52#43R70%&	43.70	1/2	L, U	T, Q, A, B	R	P	SHA
RBR52#44R20%&	44.20	1/2	L, U	T, Q, A, B	R	P	SHA
RBR52#44R80%&	44.80	1/2	L, U	T, Q, A, B	R	P	SHA
RBR52#45R30%&	45.30	1/2	L, U	T, Q, A, B	R	P	SHA
RBR52#45R90%&	45.90	1/2	L, U	T, Q, A, B	R	P	SHA
RBR52#46R40%&	46.40	1/2	L, U	T, Q, A, B	R	P	SHA
RBR52#47R00%&	47.00	1/2	L, U	T, Q, A, B	R	P	SHA
RBR52#47R50%&	47.50	1/2	L, U	T, Q, A, B	R	P	SHA
RBR52#48R10%&	48.10	1/2	L, U	T, Q, A, B	R	P	SHA
RBR52#48R70%&	48.70	1/2	L, U	T, Q, A, B	R	P	SHA
RBR52#49R30%&	49.30	1/2	L, U	T, Q, A, B	R	P	SHA

	Resistance	Power	Terminal	Resistance	Level 1	Level 2	
Part Number	Value (Ohms)	Rating (W)	Characteristic (#)	Tolerance (%)	(FRL)(&)	(FRL)(&)	Manufacturer
RBR52#51R10%&	51.10	1/2	L, U	T, Q, A, B	R	P	SHA
RBR52#51R70%&	51.70	1/2	L, U	T, Q, A, B	R	P	SHA
RBR52#52R30%&	52.30	1/2	L, U	T, Q, A, B	R	P	SHA
RBR52#53R00%&	53.00	1/2	L, U	T, Q, A, B	R	P	SHA
RBR52#53R60%&	53.60	1/2	L, U	T, Q, A, B	R	P	SHA
RBR52#54R20%&	54.20	1/2	L, U	T, Q, A, B	R	P	SHA
RBR52#54R90%&	54.90	1/2	L, U	T, Q, A, B	R	P	SHA
RBR52#55R60%&	55.60	1/2	L, U	T, Q, A, B	R	P	SHA
RBR52#56R20%&	56.20	1/2	L, U	T, Q, A, B	R	P	SHA
RBR52#56R90%&	56.90	1/2	L, U	T, Q, A, B	R	P	SHA
RBR52#57R60%&	57.60	1/2	L, U	T, Q, A, B	R	P	SHA
RBR52#58R30%&	58.30	1/2	L, U	T, Q, A, B	R	P	SHA
RBR52#59R00%&	59.00	1/2	L, U	T, Q, A, B	R	P	SHA
	Resistance	Power	Terminal	Resistance	Level 1	Level 2	
Part Number	Value (Ohms)	Rating (W)	Characteristic (#)	Tolerance (%)	(FRL)(&)	(FRL)(&)	Manufacturer
RBR52#61R20%&	61.20	1/2	L, U	T, Q, A, B	R	P	SHA
RBR52#61R90%&	61.90	1/2	L, U	T, Q, A, B	R	P	SHA
RBR52#62R60%&	62.60	1/2	L, U	T, Q, A, B	R	P	SHA
RBR52#63R40%&	63.40	1/2	L, U	T, Q, A, B	R	P	SHA
RBR52#64R20%&	64.20	1/2	L, U	T, Q, A, B	R	P	SHA
RBR52#64R90%&	64.90	1/2	L, U	T, Q, A, B	R	P	SHA
RBR52#65R70%&	65.70	1/2	L, U	T, Q, A, B	R	P	SHA
RBR52#66R50%&	66.50	1/2	L, U	T, Q, A, B	R	P	SHA
RBR52#67R30%&	67.30	1/2	L, U	T, Q, A, B	R	P	SHA
RBR52#68R10%&	68.10	1/2	L, U	T, Q, A, B	R	P	SHA
RBR52#69R00%&	69.00	1/2	L, U	T, Q, A, B	R	P	SHA
RBR52#69R80%&	69.80	1/2	L, U	T, Q, A, B	R	P	SHA
RBR52#70R60%&	70.60	1/2	L, U	T, Q, A, B	R	P	SHA
	Resistance	Power	Terminal	Resistance	Level 1	Level 2	
Part Number	Value (Ohms)	Rating (W)	Characteristic (#)	Tolerance (%)	(FRL)(&)	(FRL)(&)	Manufacturer
RBR52#73R20%&	73.20	1/2	L, U	T, Q, A, B	R	P	SHA
RBR52#74R10%&	74.10	1/2	L, U	T, Q, A, B	R	P	SHA
RBR52#75R00%&	75.00	1/2	L, U	T, Q, A, B	R	P	SHA
RBR52#75R90%&	75.90	1/2	L, U	T, Q, A, B	R	P	SHA
RBR52#76R80%&	76.80	1/2	L, U	T, Q, A, B	R	P	SHA
RBR52#77R70%&	77.70	1/2	L, U	T, Q, A, B	R	P	SHA
RBR52#78R70%&	78.70	1/2	L, U	T, Q, A, B	R	P	SHA
RBR52#79R60%&	79.60	1/2	L, U	T, Q, A, B	R	P	SHA
RBR52#80R60%&	80.60	1/2	L, U	T, Q, A, B	R	P	SHA
RBR52#81R60%&	81.60	1/2	L, U	T, Q, A, B	R	P	SHA
RBR52#82R50%&	82.50	1/2	L, U	T, Q, A, B	R	P	SHA
RBR52#83R50%&	83.50	1/2	L, U	T, Q, A, B	R	P	SHA
RBR52#84R50%&	84.50	1/2	L, U	T, Q, A, B	R	P	SHA
	Resistance	Power	Terminal	Resistance	Level 1	Level 2	
Part Number	Value (Ohms)	Rating (W)	Characteristic (#)	Tolerance (%)	(FRL)(&)	(FRL)(&)	Manufacturer

RBR52#87R60%&	87.60	1/2	L, U	T, Q, A, B	R	P	SHA
RBR52#88R70%&	88.70	1/2	L, U	T, Q, A, B	R	P	SHA
RBR52#89R80%&	89.80	1/2	L, U	T, Q, A, B	R	P	SHA
RBR52#90R90%&	90.90	1/2	L, U	T, Q, A, B	R	P	SHA
RBR52#92R00%&	92.00	1/2	L, U	T, Q, A, B	R	P	SHA
RBR52#93R10%&	93.10	1/2	L, U	T, Q, A, B	R	P	SHA
RBR52#94R20%&	94.20	1/2	L, U	T, Q, A, B	R	P	SHA
RBR52#95R30%&	95.30	1/2	L, U	T, Q, A, B	R	P	SHA
RBR52#96R50%&	96.50	1/2	L, U	T, Q, A, B	R	P	SHA
RBR52#97R60%&	97.60	1/2	L, U	T, Q, A, B	R	P	SHA
RBR52#98R80%&	98.80	1/2	L, U	T, Q, A, B	R	P	SHA
	Resistance	Power	Terminal	Resistance	Level 1	Level 2	
Part Number	Value (Ohms)	Rating (W)	Characteristic (#)	Tolerance (%)	(FRL)(&)	(FRL)(&)	Manufacturer

RBR52 Wirewound Resistors: 100.0 Ohms through 988.0 Ohms

	Resistance	Power	Terminal	Resistance	Level 1	Level 2	
Part Number	Value (Ohms)	Rating (W)	Characteristic (#)	Tolerance (%)	(FRL)(&)	(FRL)(&)	Manufacturer
RBR52#100R0%&	100.0	1/2	L, U	T, Q, A, B	R	P	SHA
RBR52#101R0%&	101.0	1/2	L, U	T, Q, A, B	R	P	SHA
RBR52#102R0%&	102.0	1/2	L, U	T, Q, A, B	R	P	SHA
RBR52#104R0%&	104.0	1/2	L, U	T, Q, A, B	R	P	SHA
RBR52#105R0%&	105.0	1/2	L, U	T, Q, A, B	R	P	SHA
RBR52#106R0%&	106.0	1/2	L, U	T, Q, A, B	R	P	SHA
RBR52#107R0%&	107.0	1/2	L, U	T, Q, A, B	R	P	SHA
RBR52#109R0%&	109.0	1/2	L, U	T, Q, A, B	R	P	SHA
RBR52#110R0%&	110.0	1/2	L, U	T, Q, A, B	R	P	SHA
RBR52#111R0%&	111.0	1/2	L, U	T, Q, A, B	R	P	SHA
RBR52#113R0%&	113.0	1/2	L, U	T, Q, A, B	R	P	SHA
RBR52#114R0%&	114.0	1/2	L, U	T, Q, A, B	R	P	SHA
RBR52#115R0%&	115.0	1/2	L, U	T, Q, A, B	R	P	SHA
RBR52#117R0%&	117.0	1/2	L, U	T, Q, A, B	R	P	SHA
	Resistance	Power	Terminal	Resistance	Level 1	Level 2	
Part Number	Value (Ohms)	Rating (W)	Characteristic (#)	Tolerance (%)	(FRL)(&)	(FRL)(&)	Manufacturer
RBR52#118R0%&	118.0	1/2	L, U	T, Q, A, B	R	P	SHA
RBR52#120R0%&	120.0	1/2	L, U	T, Q, A, B	R	P	SHA
RBR52#121R0%&	121.0	1/2	L, U	T, Q, A, B	R	P	SHA
RBR52#123R0%&	123.0	1/2	L, U	T, Q, A, B	R	P	SHA
RBR52#124R0%&	124.0	1/2	L, U	T, Q, A, B	R	P	SHA
RBR52#126R0%&	126.0	1/2	L, U	T, Q, A, B	R	P	SHA
RBR52#127R0%&	127.0	1/2	L, U	T, Q, A, B	R	P	SHA
RBR52#129R0%&	129.0	1/2	L, U	T, Q, A, B	R	P	SHA
RBR52#130R0%&	130.0	1/2	L, U	T, Q, A, B	R	P	SHA
RBR52#132R0%&	132.0	1/2	L, U	T, Q, A, B	R	P	SHA
RBR52#133R0%&	133.0	1/2	L, U	T, Q, A, B	R	P	SHA

RBR52#135R0%&	135.0	1/2	L, U	T, Q, A, B	R	P	SHA
RBR52#137R0%&	137.0	1/2	L, U	T, Q, A, B	R	P	SHA
RBR52#138R0%&	138.0	1/2	L, U	T, Q, A, B	R	P	SHA
	Resistance	Power	Terminal	Resistance	Level 1	Level 2	
Part Number	Value (Ohms)	Rating (W)	Characteristic (#)	Tolerance (%)	(FRL)(&)	(FRL)(&)	Manufacturer
RBR52#140R0%&	140.0	1/2	L, U	T, Q, A, B	R	P	SHA
RBR52#142R0%&	142.0	1/2	L, U	T, Q, A, B	R	P	SHA
RBR52#143R0%&	143.0	1/2	L, U	T, Q, A, B	R	P	SHA
RBR52#145R0%&	145.0	1/2	L, U	T, Q, A, B	R	P	SHA
RBR52#147R0%&	147.0	1/2	L, U	T, Q, A, B	R	P	SHA
RBR52#149R0%&	149.0	1/2	L, U	T, Q, A, B	R	P	SHA
RBR52#150R0%&	150.0	1/2	L, U	T, Q, A, B	R	P	SHA
RBR52#152R0%&	152.0	1/2	L, U	T, Q, A, B	R	P	SHA
RBR52#154R0%&	154.0	1/2	L, U	T, Q, A, B	R	P	SHA
RBR52#156R0%&	156.0	1/2	L, U	T, Q, A, B	R	P	SHA
RBR52#158R0%&	158.0	1/2	L, U	T, Q, A, B	R	P	SHA
RBR52#160R0%&	160.0	1/2	L, U	T, Q, A, B	R	P	SHA
RBR52#162R0%&	162.0	1/2	L, U	T, Q, A, B	R	P	SHA
RBR52#164R0%&	164.0	1/2	L, U	T, Q, A, B	R	P	SHA
	Resistance	Power	Terminal	Resistance	Level 1	Level 2	
Part Number	Value (Ohms)	Rating (W)	Characteristic (#)	Tolerance (%)	(FRL)(&)	(FRL)(&)	Manufacturer
RBR52#165R0%&	165.0	1/2	L, U	T, Q, A, B	R	P	SHA
RBR52#167R0%&	167.0	1/2	L, U	T, Q, A, B	R	P	SHA
RBR52#169R0%&	169.0	1/2	L, U	T, Q, A, B	R	P	SHA
RBR52#172R0%&	172.0	1/2	L, U	T, Q, A, B	R	P	SHA
RBR52#174R0%&	174.0	1/2	L, U	T, Q, A, B	R	P	SHA
RBR52#176R0%&	176.0	1/2	L, U	T, Q, A, B	R	P	SHA
RBR52#178R0%&	178.0	1/2	L, U	T, Q, A, B	R	P	SHA
RBR52#180R0%&	180.0	1/2	L, U	T, Q, A, B	R	P	SHA
RBR52#182R0%&	182.0	1/2	L, U	T, Q, A, B	R	P	SHA
RBR52#184R0%&	184.0	1/2	L, U	T, Q, A, B	R	P	SHA
RBR52#187R0%&	187.0	1/2	L, U	T, Q, A, B	R	P	SHA
RBR52#189R0%&	189.0	1/2	L, U	T, Q, A, B	R	P	SHA
RBR52#191R0%&	191.0	1/2	L, U	T, Q, A, B	R	P	SHA
RBR52#193R0%&	193.0	1/2	L, U	T, Q, A, B	R	P	SHA
	Resistance	Power	Terminal	Resistance	Level 1	Level 2	
Part Number	Value (Ohms)	Rating (W)	Characteristic (#)	Tolerance (%)	(FRL)(&)	(FRL)(&)	Manufacturer
RBR52#196R0%&	196.0	1/2	L, U	T, Q, A, B	R	P	SHA
RBR52#198R0%&	198.0	1/2	L, U	T, Q, A, B	R	P	SHA
RBR52#200R0%&	200.0	1/2	L, U	T, Q, A, B	R	P	SHA
RBR52#203R0%&	203.0	1/2	L, U	T, Q, A, B	R	P	SHA
RBR52#205R0%&	205.0	1/2	L, U	T, Q, A, B	R	P	SHA
RBR52#208R0%&	208.0	1/2	L, U	T, Q, A, B	R	P	SHA
RBR52#210R0%&	210.0	1/2	L, U	T, Q, A, B	R	P	SHA
RBR52#213R0%&	213.0	1/2	L, U	T, Q, A, B	R	P	SHA
RBR52#215R0%&	215.0	1/2	L, U	T, Q, A, B	R	P	SHA
RBR52#218R0%&	218.0	1/2	L, U	T, Q, A, B	R	P	SHA

RBR52#221R0%&	221.0	1/2	L, U	T, Q, A, B	R	P	SHA
RBR52#223R0%&	223.0	1/2	L, U	T, Q, A, B	R	P	SHA
RBR52#226R0%&	226.0	1/2	L, U	T, Q, A, B	R	P	SHA
RBR52#229R0%&	229.0	1/2	L, U	T, Q, A, B	R	P	SHA
	Resistance	Power	Terminal	Resistance	Level 1	Level 2	
Part Number	Value (Ohms)	Rating (W)	Characteristic (#)	Tolerance (%)	(FRL)(&)	(FRL)(&)	Manufacturer
RBR52#232R0%&	232.0	1/2	L, U	T, Q, A, B	R	P	SHA
RBR52#234R0%&	234.0	1/2	L, U	T, Q, A, B	R	P	SHA
RBR52#237R0%&	237.0	1/2	L, U	T, Q, A, B	R	P	SHA
RBR52#240R0%&	240.0	1/2	L, U	T, Q, A, B	R	P	SHA
RBR52#243R0%&	243.0	1/2	L, U	T, Q, A, B	R	P	SHA
RBR52#246R0%&	246.0	1/2	L, U	T, Q, A, B	R	P	SHA
RBR52#249R0%&	249.0	1/2	L, U	T, Q, A, B	R	P	SHA
RBR52#252R0%&	252.0	1/2	L, U	T, Q, A, B	R	P	SHA
RBR52#255R0%&	255.0	1/2	L, U	T, Q, A, B	R	P	SHA
RBR52#258R0%&	258.0	1/2	L, U	T, Q, A, B	R	P	SHA
RBR52#261R0%&	261.0	1/2	L, U	T, Q, A, B	R	P	SHA
RBR52#264R0%&	264.0	1/2	L, U	T, Q, A, B	R	P	SHA
RBR52#267R0%&	267.0	1/2	L, U	T, Q, A, B	R	P	SHA
	Resistance	Power	Terminal	Resistance	Level 1	Level 2	
Part Number	Value (Ohms)	Rating (W)	Characteristic (#)	Tolerance (%)	(FRL)(&)	(FRL)(&)	Manufacturer
RBR52#271R0%&	271.0	1/2	L, U	T, Q, A, B	R	P	SHA
RBR52#274R0%&	274.0	1/2	L, U	T, Q, A, B	R	P	SHA
RBR52#277R0%&	277.0	1/2	L, U	T, Q, A, B	R	P	SHA
RBR52#280R0%&	280.0	1/2	L, U	T, Q, A, B	R	P	SHA
RBR52#284R0%&	284.0	1/2	L, U	T, Q, A, B	R	P	SHA
RBR52#287R0%&	287.0	1/2	L, U	T, Q, A, B	R	P	SHA
RBR52#291R0%&	291.0	1/2	L, U	T, Q, A, B	R	P	SHA
RBR52#294R0%&	294.0	1/2	L, U	T, Q, A, B	R	P	SHA
RBR52#298R0%&	298.0	1/2	L, U	T, Q, A, B	R	P	SHA
RBR52#301R0%&	301.0	1/2	L, U	T, Q, A, B	R	P	SHA
RBR52#305R0%&	305.0	1/2	L, U	T, Q, A, B	R	P	SHA
RBR52#309R0%&	309.0	1/2	L, U	T, Q, A, B	R	P	SHA
RBR52#312R0%&	312.0	1/2	L, U	T, Q, A, B	R	P	SHA
RBR52#316R0%&	316.0	1/2	L, U	T, Q, A, B	R	P	SHA
	Resistance	Power	Terminal	Resistance	Level 1	Level 2	
Part Number	Value (Ohms)	Rating (W)	Characteristic (#)	Tolerance (%)	(FRL)(&)	(FRL)(&)	Manufacturer
RBR52#320R0%&	320.0	1/2	L, U	T, Q, A, B	R	P	SHA
RBR52#324R0%&	324.0	1/2	L, U	T, Q, A, B	R	P	SHA
RBR52#328R0%&	328.0	1/2	L, U	T, Q, A, B	R	P	SHA
RBR52#332R0%&	332.0	1/2	L, U	T, Q, A, B	R	P	SHA
RBR52#336R0%&	336.0	1/2	L, U	T, Q, A, B	R	P	SHA
RBR52#340R0%&	340.0	1/2	L, U	T, Q, A, B	R	P	SHA
RBR52#344R0%&	344.0	1/2	L, U	T, Q, A, B	R	P	SHA
RBR52#348R0%&	348.0	1/2	L, U	T, Q, A, B	R	P	SHA
RBR52#352R0%&	352.0	1/2	L, U	T, Q, A, B	R	P	SHA
RBR52#357R0%&	357.0	1/2	L, U	T, Q, A, B	R	P	SHA

RBR52#361R0%&	361.0	1/2	L, U	T, Q, A, B	R	P	SHA
RBR52#365R0%&	365.0	1/2	L, U	T, Q, A, B	R	P	SHA
RBR52#370R0%&	370.0	1/2	L, U	T, Q, A, B	R	P	SHA
RBR52#374R0%&	374.0	1/2	L, U	T, Q, A, B	R	P	SHA
	Resistance	Power	Terminal	Resistance	Level 1	Level 2	
Part Number	Value (Ohms)	Rating (W)	Characteristic (#)	Tolerance (%)	(FRL)(&)	(FRL)(&)	Manufacturer
RBR52#379R0%&	379.0	1/2	L, U	T, Q, A, B	R	P	SHA
RBR52#383R0%&	383.0	1/2	L, U	T, Q, A, B	R	P	SHA
RBR52#388R0%&	388.0	1/2	L, U	T, Q, A, B	R	P	SHA
RBR52#392R0%&	392.0	1/2	L, U	T, Q, A, B	R	P	SHA
RBR52#397R0%&	397.0	1/2	L, U	T, Q, A, B	R	P	SHA
RBR52#402R0%&	402.0	1/2	L, U	T, Q, A, B	R	P	SHA
RBR52#407R0%&	407.0	1/2	L, U	T, Q, A, B	R	P	SHA
RBR52#412R0%&	412.0	1/2	L, U	T, Q, A, B	R	P	SHA
RBR52#417R0%&	417.0	1/2	L, U	T, Q, A, B	R	P	SHA
RBR52#422R0%&	422.0	1/2	L, U	T, Q, A, B	R	P	SHA
RBR52#427R0%&	427.0	1/2	L, U	T, Q, A, B	R	P	SHA
RBR52#432R0%&	432.0	1/2	L, U	T, Q, A, B	R	P	SHA
RBR52#437R0%&	437.0	1/2	L, U	T, Q, A, B	R	P	SHA
	Resistance	Power	Terminal	Resistance	Level 1	Level 2	
Part Number	Value (Ohms)	Rating (W)	Characteristic (#)	Tolerance (%)	(FRL)(&)	(FRL)(&)	Manufacturer
RBR52#442R0%&	442.0	1/2	L, U	T, Q, A, B	R	P	SHA
RBR52#448R0%&	448.0	1/2	L, U	T, Q, A, B	R	P	SHA
RBR52#453R0%&	453.0	1/2	L, U	T, Q, A, B	R	P	SHA
RBR52#459R0%&	459.0	1/2	L, U	T, Q, A, B	R	P	SHA
RBR52#464R0%&	464.0	1/2	L, U	T, Q, A, B	R	P	SHA
RBR52#470R0%&	470.0	1/2	L, U	T, Q, A, B	R	P	SHA
RBR52#475R0%&	475.0	1/2	L, U	T, Q, A, B	R	P	SHA
RBR52#481R0%&	481.0	1/2	L, U	T, Q, A, B	R	P	SHA
RBR52#487R0%&	487.0	1/2	L, U	T, Q, A, B	R	P	SHA
RBR52#493R0%&	493.0	1/2	L, U	T, Q, A, B	R	P	SHA
RBR52#499R0%&	499.0	1/2	L, U	T, Q, A, B	R	P	SHA
RBR52#505R0%&	505.0	1/2	L, U	T, Q, A, B	R	P	SHA
RBR52#511R0%&	511.0	1/2	L, U	T, Q, A, B	R	P	SHA
RBR52#517R0%&	517.0	1/2	L, U	T, Q, A, B	R	P	SHA
	Resistance	Power	Terminal	Resistance	Level 1	Level 2	
Part Number	Value (Ohms)	Rating (W)	Characteristic (#)	Tolerance (%)	(FRL)(&)	(FRL)(&)	Manufacturer
RBR52#523R0%&	523.0	1/2	L, U	T, Q, A, B	R	P	SHA
RBR52#530R0%&	530.0	1/2	L, U	T, Q, A, B	R	P	SHA
RBR52#536R0%&	536.0	1/2	L, U	T, Q, A, B	R	P	SHA
RBR52#542R0%&	542.0	1/2	L, U	T, Q, A, B	R	P	SHA
RBR52#549R0%&	549.0	1/2	L, U	T, Q, A, B	R	P	SHA
RBR52#556R0%&	556.0	1/2	L, U	T, Q, A, B	R	P	SHA
RBR52#562R0%&	562.0	1/2	L, U	T, Q, A, B	R	P	SHA
RBR52#569R0%&	569.0	1/2	L, U	T, Q, A, B	R	P	SHA
RBR52#576R0%&	576.0	1/2	L, U	T, Q, A, B	R	P	SHA
RBR52#583R0%&	583.0	1/2	L, U	T, Q, A, B	R	P	SHA

RBR52#590R0%&	590.0	1/2	L, U	T, Q, A, B	R	P	SHA
RBR52#597R0%&	597.0	1/2	L, U	T, Q, A, B	R	P	SHA
RBR52#604R0%&	604.0	1/2	L, U	T, Q, A, B	R	P	SHA
RBR52#612R0%&	612.0	1/2	L, U	T, Q, A, B	R	P	SHA
	Resistance	Power	Terminal	Resistance	Level 1	Level 2	
Part Number	Value (Ohms)	Rating (W)	Characteristic (#)	Tolerance (%)	(FRL)(&)	(FRL)(&)	Manufacturer
RBR52#619R0%&	619.0	1/2	L, U	T, Q, A, B	R	P	SHA
RBR52#626R0%&	626.0	1/2	L, U	T, Q, A, B	R	P	SHA
RBR52#634R0%&	634.0	1/2	L, U	T, Q, A, B	R	P	SHA
RBR52#642R0%&	642.0	1/2	L, U	T, Q, A, B	R	P	SHA
RBR52#649R0%&	649.0	1/2	L, U	T, Q, A, B	R	P	SHA
RBR52#657R0%&	657.0	1/2	L, U	T, Q, A, B	R	P	SHA
RBR52#665R0%&	665.0	1/2	L, U	T, Q, A, B	R	P	SHA
RBR52#673R0%&	673.0	1/2	L, U	T, Q, A, B	R	P	SHA
RBR52#681R0%&	681.0	1/2	L, U	T, Q, A, B	R	P	SHA
RBR52#690R0%&	690.0	1/2	L, U	T, Q, A, B	R	P	SHA
RBR52#698R0%&	698.0	1/2	L, U	T, Q, A, B	R	P	SHA
RBR52#706R0%&	706.0	1/2	L, U	T, Q, A, B	R	P	SHA
RBR52#715R0%&	715.0	1/2	L, U	T, Q, A, B	R	P	SHA
	Resistance	Power	Terminal	Resistance	Level 1	Level 2	
Part Number	Value (Ohms)	Rating (W)	Characteristic (#)	Tolerance (%)	(FRL)(&)	(FRL)(&)	Manufacturer
RBR52#723R0%&	723.0	1/2	L, U	T, Q, A, B	R	P	SHA
RBR52#732R0%&	732.0	1/2	L, U	T, Q, A, B	R	P	SHA
RBR52#741R0%&	741.0	1/2	L, U	T, Q, A, B	R	P	SHA
RBR52#750R0%&	750.0	1/2	L, U	T, Q, A, B	R	P	SHA
RBR52#759R0%&	759.0	1/2	L, U	T, Q, A, B	R	P	SHA
RBR52#768R0%&	768.0	1/2	L, U	T, Q, A, B	R	P	SHA
RBR52#777R0%&	777.0	1/2	L, U	T, Q, A, B	R	P	SHA
RBR52#787R0%&	787.0	1/2	L, U	T, Q, A, B	R	P	SHA
RBR52#796R0%&	796.0	1/2	L, U	T, Q, A, B	R	P	SHA
RBR52#806R0%&	806.0	1/2	L, U	T, Q, A, B	R	P	SHA
RBR52#816R0%&	816.0	1/2	L, U	T, Q, A, B	R	P	SHA
RBR52#825R0%&	825.0	1/2	L, U	T, Q, A, B	R	P	SHA
RBR52#835R0%&	835.0	1/2	L, U	T, Q, A, B	R	P	SHA
RBR52#845R0%&	845.0	1/2	L, U	T, Q, A, B	R	P	SHA
	Resistance	Power	Terminal	Resistance	Level 1	Level 2	
Part Number	Value (Ohms)	Rating (W)	Characteristic (#)	Tolerance (%)	(FRL)(&)	(FRL)(&)	Manufacturer
RBR52#856R0%&	856.0	1/2	L, U	T, Q, A, B	R	P	SHA
RBR52#866R0%&	866.0	1/2	L, U	T, Q, A, B	R	P	SHA
RBR52#876R0%&	876.0	1/2	L, U	T, Q, A, B	R	P	SHA
RBR52#887R0%&	887.0	1/2	L, U	T, Q, A, B	R	P	SHA
RBR52#898R0%&	898.0	1/2	L, U	T, Q, A, B	R	P	SHA
RBR52#909R0%&	909.0	1/2	L, U	T, Q, A, B	R	P	SHA
RBR52#920R0%&	920.0	1/2	L, U	T, Q, A, B	R	P	SHA
RBR52#931R0%&	931.0	1/2	L, U	T, Q, A, B	R	P	SHA
RBR52#942R0%&	942.0	1/2	L, U	T, Q, A, B	R	P	SHA
RBR52#953R0%&	953.0	1/2	L, U	T, Q, A, B	R	P	SHA

RBR52#965R0%&	965.0	1/2	L, U	T, Q, A, B	R	P	SHA
RBR52#976R0%&	976.0	1/2	L, U	T, Q, A, B	R	P	SHA
RBR52#988R0%&	988.0	1/2	L, U	T, Q, A, B	R	P	SHA
	Resistance	Power	Terminal	Resistance	Level 1	Level 2	
Part Number	Value (Ohms)	Rating (W)	Characteristic (#)	Tolerance (%)	(FRL)(&)	(FRL)(&)	Manufacturer

RBR52 Wirewound Resistors: 1000 Ohms through 9880 Ohms

	Resistance	Power	Terminal	Resistance	Level 1	Level 2	
Part Number	Value (Ohms)	Rating (W)	Characteristic (#)	Tolerance (%)	(FRL)(&)	(FRL)(&)	Manufacturer
RBR52#10000%&	1,000	1/2	L, U	T, Q, A, B	R	P	SHA
RBR52#10100%&	1,010	1/2	L, U	T, Q, A, B	R	P	SHA
RBR52#10200%&	1,020	1/2	L, U	T, Q, A, B	R	P	SHA
RBR52#10400%&	1,040	1/2	L, U	T, Q, A, B	R	P	SHA
RBR52#10500%&	1,050	1/2	L, U	T, Q, A, B	R	P	SHA
RBR52#10600%&	1,060	1/2	L, U	T, Q, A, B	R	P	SHA
RBR52#10700%&	1,070	1/2	L, U	T, Q, A, B	R	P	SHA
RBR52#10900%&	1,090	1/2	L, U	T, Q, A, B	R	P	SHA
RBR52#11000%&	1,100	1/2	L, U	T, Q, A, B	R	P	SHA
RBR52#11100%&	1,110	1/2	L, U	T, Q, A, B	R	P	SHA
RBR52#11300%&	1,130	1/2	L, U	T, Q, A, B	R	P	SHA
RBR52#11400%&	1,140	1/2	L, U	T, Q, A, B	R	P	SHA
RBR52#11500%&	1,150	1/2	L, U	T, Q, A, B	R	P	SHA
RBR52#11700%&	1,170	1/2	L, U	T, Q, A, B	R	P	SHA
	Resistance	Power	Terminal	Resistance	Level 1	Level 2	
Part Number	Value (Ohms)	Rating (W)	Characteristic (#)	Tolerance (%)	(FRL)(&)	(FRL)(&)	Manufacturer
RBR52#11800%&	1,180	1/2	L, U	T, Q, A, B	R	P	SHA
RBR52#12000%&	1,200	1/2	L, U	T, Q, A, B	R	P	SHA
RBR52#12100%&	1,210	1/2	L, U	T, Q, A, B	R	P	SHA
RBR52#12300%&	1,230	1/2	L, U	T, Q, A, B	R	P	SHA
RBR52#12400%&	1,240	1/2	L, U	T, Q, A, B	R	P	SHA
RBR52#12600%&	1,260	1/2	L, U	T, Q, A, B	R	P	SHA
RBR52#12700%&	1,270	1/2	L, U	T, Q, A, B	R	P	SHA
RBR52#12900%&	1,290	1/2	L, U	T, Q, A, B	R	P	SHA
RBR52#13000%&	1,300	1/2	L, U	T, Q, A, B	R	P	SHA
RBR52#13200%&	1,320	1/2	L, U	T, Q, A, B	R	P	SHA
RBR52#13300%&	1,330	1/2	L, U	T, Q, A, B	R	P	SHA
RBR52#13500%&	1,350	1/2	L, U	T, Q, A, B	R	P	SHA
RBR52#13700%&	1,370	1/2	L, U	T, Q, A, B	R	P	SHA
RBR52#13800%&	1,380	1/2	L, U	T, Q, A, B	R	P	SHA
	Resistance	Power	Terminal	Resistance	Level 1	Level 2	
Part Number	Value (Ohms)	Rating (W)	Characteristic (#)	Tolerance (%)	(FRL)(&)	(FRL)(&)	Manufacturer
	Resistance	Power	Terminal	Resistance	Level 1	Level 2	
Part Number	Value (Ohms)	Rating (W)	Characteristic (#)	Tolerance (%)	(FRL)(&)	(FRL)(&)	Manufacturer
RBR52#14000%&	1,400	1/2	L, U	T, Q, A, B	R	P	SHA

RBR52#14200%&	1,420	1/2	L, U	T, Q, A, B	R	P	SHA
RBR52#14300%&	1,430	1/2	L, U	T, Q, A, B	R	P	SHA
RBR52#14500%&	1,450	1/2	L, U	T, Q, A, B	R	P	SHA
RBR52#14700%&	1,470	1/2	L, U	T, Q, A, B	R	P	SHA
RBR52#14900%&	1,490	1/2	L, U	T, Q, A, B	R	P	SHA
RBR52#15000%&	1,500	1/2	L, U	T, Q, A, B	R	P	SHA
RBR52#15200%&	1,520	1/2	L, U	T, Q, A, B	R	P	SHA
RBR52#15400%&	1,540	1/2	L, U	T, Q, A, B	R	P	SHA
RBR52#15600%&	1,560	1/2	L, U	T, Q, A, B	R	P	SHA
RBR52#15800%&	1,580	1/2	L, U	T, Q, A, B	R	P	SHA
RBR52#16000%&	1,600	1/2	L, U	T, Q, A, B	R	P	SHA
RBR52#16200%&	1,620	1/2	L, U	T, Q, A, B	R	P	SHA
RBR52#16400%&	1,640	1/2	L, U	T, Q, A, B	R	P	SHA
	Resistance	Power	Terminal	Resistance	Level 1	Level 2	
Part Number	Value (Ohms)	Rating (W)	Characteristic (#)	Tolerance (%)	(FRL)(&)	(FRL)(&)	Manufacturer
RBR52#16500%&	1,650	1/2	L, U	T, Q, A, B	R	P	SHA
RBR52#16700%&	1,670	1/2	L, U	T, Q, A, B	R	P	SHA
RBR52#16900%&	1,690	1/2	L, U	T, Q, A, B	R	P	SHA
RBR52#17200%&	1,720	1/2	L, U	T, Q, A, B	R	P	SHA
RBR52#17400%&	1,740	1/2	L, U	T, Q, A, B	R	P	SHA
RBR52#17600%&	1,760	1/2	L, U	T, Q, A, B	R	P	SHA
RBR52#17800%&	1,780	1/2	L, U	T, Q, A, B	R	P	SHA
RBR52#18000%&	1,800	1/2	L, U	T, Q, A, B	R	P	SHA
RBR52#18200%&	1,820	1/2	L, U	T, Q, A, B	R	P	SHA
RBR52#18400%&	1,840	1/2	L, U	T, Q, A, B	R	P	SHA
RBR52#18700%&	1,870	1/2	L, U	T, Q, A, B	R	P	SHA
RBR52#18900%&	1,890	1/2	L, U	T, Q, A, B	R	P	SHA
RBR52#19100%&	1,910	1/2	L, U	T, Q, A, B	R	P	SHA
RBR52#19300%&	1,930	1/2	L, U	T, Q, A, B	R	P	SHA
	Resistance	Power	Terminal	Resistance	Level 1	Level 2	
Part Number	Value (Ohms)	Rating (W)	Characteristic (#)	Tolerance (%)	(FRL)(&)	(FRL)(&)	Manufacturer
RBR52#19600%&	1,960	1/2	L, U	T, Q, A, B	R	P	SHA
RBR52#19800%&	1,980	1/2	L, U	T, Q, A, B	R	P	SHA
RBR52#20000%&	2,000	1/2	L, U	T, Q, A, B	R	P	SHA
RBR52#20300%&	2,030	1/2	L, U	T, Q, A, B	R	P	SHA
RBR52#20500%&	2,050	1/2	L, U	T, Q, A, B	R	P	SHA
RBR52#20800%&	2,080	1/2	L, U	T, Q, A, B	R	P	SHA
RBR52#21000%&	2,100	1/2	L, U	T, Q, A, B	R	P	SHA
RBR52#21300%&	2,130	1/2	L, U	T, Q, A, B	R	P	SHA
RBR52#21500%&	2,150	1/2	L, U	T, Q, A, B	R	P	SHA
RBR52#21800%&	2,180	1/2	L, U	T, Q, A, B	R	P	SHA
RBR52#22100%&	2,210	1/2	L, U	T, Q, A, B	R	P	SHA
RBR52#22300%&	2,230	1/2	L, U	T, Q, A, B	R	P	SHA
RBR52#22600%&	2,260	1/2	L, U	T, Q, A, B	R	P	SHA
RBR52#22900%&	2,290	1/2	L, U	T, Q, A, B	R	P	SHA
	Resistance	Power	Terminal	Resistance	Level 1	Level 2	
Part Number	Value (Ohms)	Rating (W)	Characteristic (#)	Tolerance (%)	(FRL)(&)	(FRL)(&)	Manufacturer

RBR52#23200%&	2,320	1/2	L, U	T, Q, A, B	R	P	SHA
RBR52#23400%&	2,340	1/2	L, U	T, Q, A, B	R	P	SHA
RBR52#23700%&	2,370	1/2	L, U	T, Q, A, B	R	P	SHA
RBR52#24000%&	2,400	1/2	L, U	T, Q, A, B	R	P	SHA
RBR52#24300%&	2,430	1/2	L, U	T, Q, A, B	R	P	SHA
RBR52#24600%&	2,460	1/2	L, U	T, Q, A, B	R	P	SHA
RBR52#24900%&	2,490	1/2	L, U	T, Q, A, B	R	P	SHA
RBR52#25200%&	2,520	1/2	L, U	T, Q, A, B	R	P	SHA
RBR52#25500%&	2,550	1/2	L, U	T, Q, A, B	R	P	SHA
RBR52#25800%&	2,580	1/2	L, U	T, Q, A, B	R	P	SHA
RBR52#26100%&	2,610	1/2	L, U	T, Q, A, B	R	P	SHA
RBR52#26400%&	2,640	1/2	L, U	T, Q, A, B	R	P	SHA
RBR52#26700%&	2,670	1/2	L, U	T, Q, A, B	R	P	SHA
RBR52#27100%&	2,710	1/2	L, U	T, Q, A, B	R	P	SHA
	Resistance	Power	Terminal	Resistance	Level 1	Level 2	
Part Number	Value (Ohms)	Rating (W)	Characteristic (#)	Tolerance (%)	(FRL)(&)	(FRL)(&)	Manufacturer
RBR52#27400%&	2,740	1/2	L, U	T, Q, A, B	R	P	SHA
RBR52#27700%&	2,770	1/2	L, U	T, Q, A, B	R	P	SHA
RBR52#28000%&	2,800	1/2	L, U	T, Q, A, B	R	P	SHA
RBR52#28400%&	2,840	1/2	L, U	T, Q, A, B	R	P	SHA
RBR52#28700%&	2,870	1/2	L, U	T, Q, A, B	R	P	SHA
RBR52#29100%&	2,910	1/2	L, U	T, Q, A, B	R	P	SHA
RBR52#29400%&	2,940	1/2	L, U	T, Q, A, B	R	P	SHA
RBR52#29800%&	2,980	1/2	L, U	T, Q, A, B	R	P	SHA
RBR52#30100%&	3,010	1/2	L, U	T, Q, A, B	R	P	SHA
RBR52#30500%&	3,050	1/2	L, U	T, Q, A, B	R	P	SHA
RBR52#30900%&	3,090	1/2	L, U	T, Q, A, B	R	P	SHA
RBR52#31200%&	3,120	1/2	L, U	T, Q, A, B	R	P	SHA
	Resistance	Power	Terminal	Resistance	Level 1	Level 2	
Part Number	Value (Ohms)	Rating (W)	Characteristic (#)	Tolerance (%)	(FRL)(&)	(FRL)(&)	Manufacturer
RBR52#31600%&	3,160	1/2	L, U	T, Q, A, B	R	P	SHA
RBR52#32000%&	3,200	1/2	L, U	T, Q, A, B	R	P	SHA
RBR52#32400%&	3,240	1/2	L, U	T, Q, A, B	R	P	SHA
RBR52#32800%&	3,280	1/2	L, U	T, Q, A, B	R	P	SHA
RBR52#33200%&	3,320	1/2	L, U	T, Q, A, B	R	P	SHA
RBR52#33600%&	3,360	1/2	L, U	T, Q, A, B	R	P	SHA
RBR52#34000%&	3,400	1/2	L, U	T, Q, A, B	R	P	SHA
RBR52#34400%&	3,440	1/2	L, U	T, Q, A, B	R	P	SHA
RBR52#34800%&	3,480	1/2	L, U	T, Q, A, B	R	P	SHA
RBR52#35200%&	3,520	1/2	L, U	T, Q, A, B	R	P	SHA
RBR52#35700%&	3,570	1/2	L, U	T, Q, A, B	R	P	SHA
RBR52#36100%&	3,610	1/2	L, U	T, Q, A, B	R	P	SHA
RBR52#36500%&	3,650	1/2	L, U	T, Q, A, B	R	P	SHA
RBR52#37000%&	3,700	1/2	L, U	T, Q, A, B	R	P	SHA
	Resistance	Power	Terminal	Resistance	Level 1	Level 2	
Part Number	Value (Ohms)	Rating (W)	Characteristic (#)	Tolerance (%)	(FRL)(&)	(FRL)(&)	Manufacturer
RBR52#37400%&	3,740	1/2	L, U	T, Q, A, B	R	P	SHA

RBR52#37900%&	3,790	1/2	L, U	T, Q, A, B	R	P	SHA
RBR52#38300%&	3,830	1/2	L, U	T, Q, A, B	R	P	SHA
RBR52#38800%&	3,880	1/2	L, U	T, Q, A, B	R	P	SHA
RBR52#39200%&	3,920	1/2	L, U	T, Q, A, B	R	P	SHA
RBR52#39700%&	3,970	1/2	L, U	T, Q, A, B	R	P	SHA
RBR52#40200%&	4,020	1/2	L, U	T, Q, A, B	R	P	SHA
RBR52#40700%&	4,070	1/2	L, U	T, Q, A, B	R	P	SHA
RBR52#41200%&	4,120	1/2	L, U	T, Q, A, B	R	P	SHA
RBR52#41700%&	4,170	1/2	L, U	T, Q, A, B	R	P	SHA
RBR52#42200%&	4,220	1/2	L, U	T, Q, A, B	R	P	SHA
RBR52#42700%&	4,270	1/2	L, U	T, Q, A, B	R	P	SHA
RBR52#43200%&	4,320	1/2	L, U	T, Q, A, B	R	P	SHA
RBR52#43700%&	4,370	1/2	L, U	T, Q, A, B	R	P	SHA
	Resistance	Power	Terminal	Resistance	Level 1	Level 2	
Part Number	Value (Ohms)	Rating (W)	Characteristic (#)	Tolerance (%)	(FRL)(&)	(FRL)(&)	Manufacturer
RBR52#44200%&	4,420	1/2	L, U	T, Q, A, B	R	P	SHA
RBR52#44800%&	4,480	1/2	L, U	T, Q, A, B	R	P	SHA
RBR52#45300%&	4,530	1/2	L, U	T, Q, A, B	R	P	SHA
RBR52#45900%&	4,590	1/2	L, U	T, Q, A, B	R	P	SHA
RBR52#46400%&	4,640	1/2	L, U	T, Q, A, B	R	P	SHA
RBR52#47000%&	4,700	1/2	L, U	T, Q, A, B	R	P	SHA
RBR52#47500%&	4,750	1/2	L, U	T, Q, A, B	R	P	SHA
RBR52#48100%&	4,810	1/2	L, U	T, Q, A, B	R	P	SHA
RBR52#48700%&	4,870	1/2	L, U	T, Q, A, B	R	P	SHA
RBR52#49300%&	4,930	1/2	L, U	T, Q, A, B	R	P	SHA
RBR52#49900%&	4,990	1/2	L, U	T, Q, A, B	R	P	SHA
RBR52#50500%&	5,050	1/2	L, U	T, Q, A, B	R	P	SHA
RBR52#51100%&	5,110	1/2	L, U	T, Q, A, B	R	P	SHA
RBR52#51700%&	5,170	1/2	L, U	T, Q, A, B	R	P	SHA
	Resistance	Power	Terminal	Resistance	Level 1	Level 2	
Part Number	Value (Ohms)	Rating (W)	Characteristic (#)	Tolerance (%)	(FRL)(&)	(FRL)(&)	Manufacturer
RBR52#52300%&	5,230	1/2	L, U	T, Q, A, B	R	P	SHA
RBR52#53000%&	5,300	1/2	L, U	T, Q, A, B	R	P	SHA
RBR52#53600%&	5,360	1/2	L, U	T, Q, A, B	R	P	SHA
RBR52#54200%&	5,420	1/2	L, U	T, Q, A, B	R	P	SHA
RBR52#54900%&	5,490	1/2	L, U	T, Q, A, B	R	P	SHA
RBR52#55600%&	5,560	1/2	L, U	T, Q, A, B	R	P	SHA
RBR52#56200%&	5,620	1/2	L, U	T, Q, A, B	R	P	SHA
RBR52#56900%&	5,690	1/2	L, U	T, Q, A, B	R	P	SHA
RBR52#57600%&	5,760	1/2	L, U	T, Q, A, B	R	P	SHA
RBR52#58300%&	5,830	1/2	L, U	T, Q, A, B	R	P	SHA
RBR52#59000%&	5,900	1/2	L, U	T, Q, A, B	R	P	SHA
RBR52#59700%&	5,970	1/2	L, U	T, Q, A, B	R	P	SHA
RBR52#60400%&	6,040	1/2	L, U	T, Q, A, B	R	P	SHA
RBR52#61200%&	6,120	1/2	L, U	T, Q, A, B	R	P	SHA
	Resistance	Power	Terminal	Resistance	Level 1	Level 2	
Part Number	Value (Ohms)	Rating (W)	Characteristic (#)	Tolerance (%)	(FRL)(&)	(FRL)(&)	Manufacturer

RBR52#61900%&	6,190	1/2	L, U	T, Q, A, B	R	P	SHA
RBR52#62600%&	6,260	1/2	L, U	T, Q, A, B	R	P	SHA
RBR52#63400%&	6,340	1/2	L, U	T, Q, A, B	R	P	SHA
RBR52#64200%&	6,420	1/2	L, U	T, Q, A, B	R	P	SHA
RBR52#64900%&	6,490	1/2	L, U	T, Q, A, B	R	P	SHA
RBR52#65700%&	6,570	1/2	L, U	T, Q, A, B	R	P	SHA
RBR52#66500%&	6,650	1/2	L, U	T, Q, A, B	R	P	SHA
RBR52#67300%&	6,730	1/2	L, U	T, Q, A, B	R	P	SHA
RBR52#68100%&	6,810	1/2	L, U	T, Q, A, B	R	P	SHA
RBR52#69000%&	6,900	1/2	L, U	T, Q, A, B	R	P	SHA
RBR52#69800%&	6,980	1/2	L, U	T, Q, A, B	R	P	SHA
RBR52#70600%&	7,060	1/2	L, U	T, Q, A, B	R	P	SHA
	Resistance	Power	Terminal	Resistance	Level 1	Level 2	
Part Number	Value (Ohms)	Rating (W)	Characteristic (#)	Tolerance (%)	(FRL)(&)	(FRL)(&)	Manufacturer
RBR52#71500%&	7,150	1/2	L, U	T, Q, A, B	R	P	SHA
RBR52#72300%&	7,230	1/2	L, U	T, Q, A, B	R	P	SHA
RBR52#73200%&	7,320	1/2	L, U	T, Q, A, B	R	P	SHA
RBR52#74100%&	7,410	1/2	L, U	T, Q, A, B	R	P	SHA
RBR52#75000%&	7,500	1/2	L, U	T, Q, A, B	R	P	SHA
RBR52#75900%&	7,590	1/2	L, U	T, Q, A, B	R	P	SHA
RBR52#76800%&	7,680	1/2	L, U	T, Q, A, B	R	P	SHA
RBR52#77700%&	7,770	1/2	L, U	T, Q, A, B	R	P	SHA
RBR52#78700%&	7,870	1/2	L, U	T, Q, A, B	R	P	SHA
RBR52#79600%&	7,960	1/2	L, U	T, Q, A, B	R	P	SHA
RBR52#80600%&	8,060	1/2	L, U	T, Q, A, B	R	P	SHA
RBR52#81600%&	8,160	1/2	L, U	T, Q, A, B	R	P	SHA
RBR52#82500%&	8,250	1/2	L, U	T, Q, A, B	R	P	SHA
RBR52#83500%&	8,350	1/2	L, U	T, Q, A, B	R	P	SHA
	Resistance	Power	Terminal	Resistance	Level 1	Level 2	
Part Number	Value (Ohms)	Rating (W)	Characteristic (#)	Tolerance (%)	(FRL)(&)	(FRL)(&)	Manufacturer
RBR52#84500%&	8,450	1/2	L, U	T, Q, A, B	R	P	SHA
RBR52#85600%&	8,560	1/2	L, U	T, Q, A, B	R	P	SHA
RBR52#86600%&	8,660	1/2	L, U	T, Q, A, B	R	P	SHA
RBR52#87600%&	8,760	1/2	L, U	T, Q, A, B	R	P	SHA
RBR52#88700%&	8,870	1/2	L, U	T, Q, A, B	R	P	SHA
RBR52#89800%&	8,980	1/2	L, U	T, Q, A, B	R	P	SHA
RBR52#90900%&	9,090	1/2	L, U	T, Q, A, B	R	P	SHA
RBR52#92000%&	9,190	1/2	L, U	T, Q, A, B	R	P	SHA
RBR52#93100%&	9,310	1/2	L, U	T, Q, A, B	R	P	SHA
RBR52#94200%&	9,420	1/2	L, U	T, Q, A, B	R	P	SHA
RBR52#95300%&	9,530	1/2	L, U	T, Q, A, B	R	P	SHA
RBR52#96500%&	9,650	1/2	L, U	T, Q, A, B	R	P	SHA
RBR52#97600%&	9,760	1/2	L, U	T, Q, A, B	R	P	SHA
RBR52#98800%&	9,880	1/2	L, U	T, Q, A, B	R	P	SHA
	Resistance	Power	Terminal	Resistance	Level 1	Level 2	
Part Number	Value (Ohms)	Rating (W)	Characteristic (#)	Tolerance (%)	(FRL)(&)	(FRL)(&)	Manufacturer

RBR52 Wirewound Resistors: 10,000 Ohms through 98,800 Ohms

	Resistance	Power	Terminal	Resistance	Level 1	Level 2	
Part Number	Value (Ohms)	Rating (W)	Characteristic (#)	Tolerance (%)	(FRL)(&)	(FRL)(&)	Manufacturer
RBR52#10002%&	10,000	1/2	L, U	T, Q, A, B	R	P	SHA
RBR52#10102%&	10,100	1/2	L, U	T, Q, A, B	R	P	SHA
RBR52#10202%&	10,200	1/2	L, U	T, Q, A, B	R	P	SHA
RBR52#10402%&	10,400	1/2	L, U	T, Q, A, B	R	P	SHA
RBR52#10502%&	10,500	1/2	L, U	T, Q, A, B	R	P	SHA
RBR52#10602%&	10,600	1/2	L, U	T, Q, A, B	R	P	SHA
RBR52#10702%&	10,700	1/2	L, U	T, Q, A, B	R	P	SHA
RBR52#10902%&	10,900	1/2	L, U	T, Q, A, B	R	P	SHA
RBR52#11002%&	11,000	1/2	L, U	T, Q, A, B	R	P	SHA
RBR52#11102%&	11,100	1/2	L, U	T, Q, A, B	R	P	SHA
RBR52#11302%&	11,300	1/2	L, U	T, Q, A, B	R	P	SHA
RBR52#11402%&	11,400	1/2	L, U	T, Q, A, B	R	P	SHA
RBR52#11502%&	11,500	1/2	L, U	T, Q, A, B	R	P	SHA
RBR52#11702%&	11,700	1/2	L, U	T, Q, A, B	R	P	SHA
	Resistance	Power	Terminal	Resistance	Level 1	Level 2	
Part Number	Value (Ohms)	Rating (W)	Characteristic (#)	Tolerance (%)	(FRL)(&)	(FRL)(&)	Manufacturer
RBR52#11802%&	11,800	1/2	L, U	T, Q, A, B	R	P	SHA
RBR52#12002%&	12,000	1/2	L, U	T, Q, A, B	R	P	SHA
RBR52#12102%&	12,100	1/2	L, U	T, Q, A, B	R	P	SHA
RBR52#12302%&	12,300	1/2	L, U	T, Q, A, B	R	P	SHA
RBR52#12402%&	12,400	1/2	L, U	T, Q, A, B	R	P	SHA
RBR52#12602%&	12,600	1/2	L, U	T, Q, A, B	R	P	SHA
RBR52#12702%&	12,700	1/2	L, U	T, Q, A, B	R	P	SHA
RBR52#12902%&	12,900	1/2	L, U	T, Q, A, B	R	P	SHA
RBR52#13002%&	13,000	1/2	L, U	T, Q, A, B	R	P	SHA
RBR52#13202%&	13,200	1/2	L, U	T, Q, A, B	R	P	SHA
RBR52#13302%&	13,300	1/2	L, U	T, Q, A, B	R	P	SHA
RBR52#13502%&	13,500	1/2	L, U	T, Q, A, B	R	P	SHA
RBR52#13702%&	13,700	1/2	L, U	T, Q, A, B	R	P	SHA
RBR52#13802%&	13,800	1/2	L, U	T, Q, A, B	R	P	SHA
	Resistance	Power	Terminal	Resistance	Level 1	Level 2	
Part Number	Value (Ohms)	Rating (W)	Characteristic (#)	Tolerance (%)	(FRL)(&)	(FRL)(&)	Manufacturer
RBR52#14002%&	14,000	1/2	L, U	T, Q, A, B	R	P	SHA
RBR52#14202%&	14,200	1/2	L, U	T, Q, A, B	R	P	SHA
RBR52#14302%&	14,300	1/2	L, U	T, Q, A, B	R	P	SHA
RBR52#14502%&	14,500	1/2	L, U	T, Q, A, B	R	P	SHA
RBR52#14702%&	14,700	1/2	L, U	T, Q, A, B	R	P	SHA
RBR52#14902%&	14,900	1/2	L, U	T, Q, A, B	R	P	SHA
RBR52#15002%&	15,000	1/2	L, U	T, Q, A, B	R	P	SHA
RBR52#15202%&	15,200	1/2	L, U	T, Q, A, B	R	P	SHA

RBR52#15402%&	15,400	1/2	L, U	T, Q, A, B	R	P	SHA
RBR52#15602%&	15,600	1/2	L, U	T, Q, A, B	R	P	SHA
RBR52#15802%&	15,800	1/2	L, U	T, Q, A, B	R	P	SHA
RBR52#16002%&	16,000	1/2	L, U	T, Q, A, B	R	P	SHA
RBR52#16202%&	16,200	1/2	L, U	T, Q, A, B	R	P	SHA
RBR52#16402%&	16,400	1/2	L, U	T, Q, A, B	R	P	SHA
	Resistance	Power	Terminal	Resistance	Level 1	Level 2	
Part Number	Value (Ohms)	Rating (W)	Characteristic (#)	Tolerance (%)	(FRL)(&)	(FRL)(&)	Manufacturer
RBR52#16502%&	16,500	1/2	L, U	T, Q, A, B	R	P	SHA
RBR52#16702%&	16,700	1/2	L, U	T, Q, A, B	R	P	SHA
RBR52#16902%&	16,900	1/2	L, U	T, Q, A, B	R	P	SHA
RBR52#17202%&	17,200	1/2	L, U	T, Q, A, B	R	P	SHA
RBR52#17402%&	17,400	1/2	L, U	T, Q, A, B	R	P	SHA
RBR52#17602%&	17,600	1/2	L, U	T, Q, A, B	R	P	SHA
RBR52#17802%&	17,800	1/2	L, U	T, Q, A, B	R	P	SHA
RBR52#18002%&	18,000	1/2	L, U	T, Q, A, B	R	P	SHA
RBR52#18202%&	18,200	1/2	L, U	T, Q, A, B	R	P	SHA
RBR52#18402%&	18,400	1/2	L, U	T, Q, A, B	R	P	SHA
RBR52#18702%&	18,700	1/2	L, U	T, Q, A, B	R	P	SHA
RBR52#18902%&	18,900	1/2	L, U	T, Q, A, B	R	P	SHA
RBR52#19102%&	19,100	1/2	L, U	T, Q, A, B	R	P	SHA
RBR52#19302%&	19,300	1/2	L, U	T, Q, A, B	R	P	SHA
	Resistance	Power	Terminal	Resistance	Level 1	Level 2	
Part Number	Value (Ohms)	Rating (W)	Characteristic (#)	Tolerance (%)	(FRL)(&)	(FRL)(&)	Manufacturer
RBR52#19602%&	19,600	1/2	L, U	T, Q, A, B	R	P	SHA
RBR52#19802%&	19,800	1/2	L, U	T, Q, A, B	R	P	SHA
RBR52#20002%&	20,000	1/2	L, U	T, Q, A, B	R	P	SHA
RBR52#20302%&	20,300	1/2	L, U	T, Q, A, B	R	P	SHA
RBR52#20502%&	20,500	1/2	L, U	T, Q, A, B	R	P	SHA
RBR52#20802%&	20,800	1/2	L, U	T, Q, A, B	R	P	SHA
RBR52#21002%&	21,000	1/2	L, U	T, Q, A, B	R	P	SHA
RBR52#21302%&	21,300	1/2	L, U	T, Q, A, B	R	P	SHA
RBR52#21502%&	21,500	1/2	L, U	T, Q, A, B	R	P	SHA
RBR52#21802%&	21,800	1/2	L, U	T, Q, A, B	R	P	SHA
RBR52#22102%&	22,100	1/2	L, U	T, Q, A, B	R	P	SHA
RBR52#22302%&	22,300	1/2	L, U	T, Q, A, B	R	P	SHA
RBR52#22602%&	22,600	1/2	L, U	T, Q, A, B	R	P	SHA
RBR52#22902%&	22,900	1/2	L, U	T, Q, A, B	R	P	SHA
	Resistance	Power	Terminal	Resistance	Level 1	Level 2	
Part Number	Value (Ohms)	Rating (W)	Characteristic (#)	Tolerance (%)	(FRL)(&)	(FRL)(&)	Manufacturer
RBR52#23202%&	23,200	1/2	L, U	T, Q, A, B	R	P	SHA
RBR52#23402%&	23,400	1/2	L, U	T, Q, A, B	R	P	SHA
RBR52#23702%&	23,700	1/2	L, U	T, Q, A, B	R	P	SHA
RBR52#24002%&	24,000	1/2	L, U	T, Q, A, B	R	P	SHA
RBR52#24302%&	24,300	1/2	L, U	T, Q, A, B	R	P	SHA
RBR52#24602%&	24,600	1/2	L, U	T, Q, A, B	R	P	SHA
RBR52#24902%&	24,900	1/2	L, U	T, Q, A, B	R	P	SHA

RBR52#25202%&	25,200	1/2	L, U	T, Q, A, B	R	P	SHA
RBR52#25502%&	25,500	1/2	L, U	T, Q, A, B	R	P	SHA
RBR52#25802%&	25,800	1/2	L, U	T, Q, A, B	R	P	SHA
RBR52#26102%&	26,100	1/2	L, U	T, Q, A, B	R	P	SHA
RBR52#26402%&	26,400	1/2	L, U	T, Q, A, B	R	P	SHA
RBR52#26702%&	26,700	1/2	L, U	T, Q, A, B	R	P	SHA
RBR52#27102%&	27,100	1/2	L, U	T, Q, A, B	R	P	SHA
	Resistance	Power	Terminal	Resistance	Level 1	Level 2	
Part Number	Value (Ohms)	Rating (W)	Characteristic (#)	Tolerance (%)	(FRL)(&)	(FRL)(&)	Manufacturer
RBR52#27402%&	27,400	1/2	L, U	T, Q, A, B	R	P	SHA
RBR52#27702%&	27,700	1/2	L, U	T, Q, A, B	R	P	SHA
RBR52#28002%&	28,000	1/2	L, U	T, Q, A, B	R	P	SHA
RBR52#28402%&	28,400	1/2	L, U	T, Q, A, B	R	P	SHA
RBR52#28702%&	28,700	1/2	L, U	T, Q, A, B	R	P	SHA
RBR52#29102%&	29,100	1/2	L, U	T, Q, A, B	R	P	SHA
RBR52#29402%&	29,400	1/2	L, U	T, Q, A, B	R	P	SHA
RBR52#29802%&	29,800	1/2	L, U	T, Q, A, B	R	P	SHA
RBR52#30102%&	30,100	1/2	L, U	T, Q, A, B	R	P	SHA
RBR52#30502%&	30,500	1/2	L, U	T, Q, A, B	R	P	SHA
RBR52#30902%&	30,900	1/2	L, U	T, Q, A, B	R	P	SHA
RBR52#31202%&	31,200	1/2	L, U	T, Q, A, B	R	P	SHA
	Resistance	Power	Terminal	Resistance	Level 1	Level 2	
Part Number	Value (Ohms)	Rating (W)	Characteristic (#)	Tolerance (%)	(FRL)(&)	(FRL)(&)	Manufacturer
RBR52#31602%&	31,600	1/2	L, U	T, Q, A, B	R	P	SHA
RBR52#32002%&	32,000	1/2	L, U	T, Q, A, B	R	P	SHA
RBR52#32402%&	32,400	1/2	L, U	T, Q, A, B	R	P	SHA
RBR52#32802%&	32,800	1/2	L, U	T, Q, A, B	R	P	SHA
RBR52#33202%&	33,200	1/2	L, U	T, Q, A, B	R	P	SHA
RBR52#33602%&	33,600	1/2	L, U	T, Q, A, B	R	P	SHA
RBR52#34002%&	34,000	1/2	L, U	T, Q, A, B	R	P	SHA
RBR52#34402%&	34,400	1/2	L, U	T, Q, A, B	R	P	SHA
RBR52#34802%&	34,800	1/2	L, U	T, Q, A, B	R	P	SHA
RBR52#35202%&	35,200	1/2	L, U	T, Q, A, B	R	P	SHA
RBR52#35702%&	35,700	1/2	L, U	T, Q, A, B	R	P	SHA
RBR52#36102%&	36,100	1/2	L, U	T, Q, A, B	R	P	SHA
RBR52#36502%&	36,500	1/2	L, U	T, Q, A, B	R	P	SHA
RBR52#37002%&	37,000	1/2	L, U	T, Q, A, B	R	P	SHA
	Resistance	Power	Terminal	Resistance	Level 1	Level 2	
Part Number	Value (Ohms)	Rating (W)	Characteristic (#)	Tolerance (%)	(FRL)(&)	(FRL)(&)	Manufacturer
RBR52#37402%&	37,400	1/2	L, U	T, Q, A, B	R	P	SHA
RBR52#37902%&	37,900	1/2	L, U	T, Q, A, B	R	P	SHA
RBR52#38302%&	38,300	1/2	L, U	T, Q, A, B	R	P	SHA
RBR52#38802%&	38,800	1/2	L, U	T, Q, A, B	R	P	SHA
RBR52#39202%&	39,200	1/2	L, U	T, Q, A, B	R	P	SHA
RBR52#39702%&	39,700	1/2	L, U	T, Q, A, B	R	P	SHA
RBR52#40202%&	40,200	1/2	L, U	T, Q, A, B	R	P	SHA
RBR52#40702%&	40,700	1/2	L, U	T, Q, A, B	R	P	SHA

RBR52#41202%&	41,200	1/2	L, U	T, Q, A, B	R	P	SHA
RBR52#41702%&	41,700	1/2	L, U	T, Q, A, B	R	P	SHA
RBR52#42202%&	42,200	1/2	L, U	T, Q, A, B	R	P	SHA
RBR52#42702%&	42,700	1/2	L, U	T, Q, A, B	R	P	SHA
RBR52#43202%&	43,200	1/2	L, U	T, Q, A, B	R	P	SHA
RBR52#43702%&	43,700	1/2	L, U	T, Q, A, B	R	P	SHA
	Resistance	Power	Terminal	Resistance	Level 1	Level 2	
Part Number	Value (Ohms)	Rating (W)	Characteristic (#)	Tolerance (%)	(FRL)(&)	(FRL)(&)	Manufacturer
RBR52#44202%&	44,200	1/2	L, U	T, Q, A, B	R	P	SHA
RBR52#44802%&	44,800	1/2	L, U	T, Q, A, B	R	P	SHA
RBR52#45302%&	45,300	1/2	L, U	T, Q, A, B	R	P	SHA
RBR52#45902%&	45,900	1/2	L, U	T, Q, A, B	R	P	SHA
RBR52#46402%&	46,400	1/2	L, U	T, Q, A, B	R	P	SHA
RBR52#47002%&	47,000	1/2	L, U	T, Q, A, B	R	P	SHA
RBR52#47502%&	47,500	1/2	L, U	T, Q, A, B	R	P	SHA
RBR52#48102%&	48,100	1/2	L, U	T, Q, A, B	R	P	SHA
RBR52#48702%&	48,700	1/2	L, U	T, Q, A, B	R	P	SHA
RBR52#49302%&	49,300	1/2	L, U	T, Q, A, B	R	P	SHA
RBR52#49902%&	49,900	1/2	L, U	T, Q, A, B	R	P	SHA
RBR52#50502%&	50,500	1/2	L, U	T, Q, A, B	R	P	SHA
RBR52#51102%&	51,100	1/2	L, U	T, Q, A, B	R	P	SHA
RBR52#51702%&	51,700	1/2	L, U	T, Q, A, B	R	P	SHA
	Resistance	Power	Terminal	Resistance	Level 1	Level 2	
Part Number	Value (Ohms)	Rating (W)	Characteristic (#)	Tolerance (%)	(FRL)(&)	(FRL)(&)	Manufacturer
RBR52#52302%&	52,300	1/2	L, U	T, Q, A, B	R	P	SHA
RBR52#53002%&	53,000	1/2	L, U	T, Q, A, B	R	P	SHA
RBR52#53602%&	53,600	1/2	L, U	T, Q, A, B	R	P	SHA
RBR52#54202%&	54,200	1/2	L, U	T, Q, A, B	R	P	SHA
RBR52#54902%&	54,900	1/2	L, U	T, Q, A, B	R	P	SHA
RBR52#55602%&	55,600	1/2	L, U	T, Q, A, B	R	P	SHA
RBR52#56202%&	56,200	1/2	L, U	T, Q, A, B	R	P	SHA
RBR52#56902%&	56,900	1/2	L, U	T, Q, A, B	R	P	SHA
RBR52#57602%&	57,600	1/2	L, U	T, Q, A, B	R	P	SHA
RBR52#58302%&	58,300	1/2	L, U	T, Q, A, B	R	P	SHA
RBR52#59002%&	59,000	1/2	L, U	T, Q, A, B	R	P	SHA
RBR52#59702%&	59,700	1/2	L, U	T, Q, A, B	R	P	SHA
RBR52#60402%&	60,400	1/2	L, U	T, Q, A, B	R	P	SHA
RBR52#61202%&	61,200	1/2	L, U	T, Q, A, B	R	P	SHA
	Resistance	Power	Terminal	Resistance	Level 1	Level 2	
Part Number	Value (Ohms)	Rating (W)	Characteristic (#)	Tolerance (%)	(FRL)(&)	(FRL)(&)	Manufacturer
RBR52#61902%&	61,900	1/2	L, U	T, Q, A, B	R	P	SHA
RBR52#62602%&	62,600	1/2	L, U	T, Q, A, B	R	P	SHA
RBR52#63402%&	63,400	1/2	L, U	T, Q, A, B	R	P	SHA
RBR52#64202%&	64,200	1/2	L, U	T, Q, A, B	R	P	SHA
RBR52#64902%&	64,900	1/2	L, U	T, Q, A, B	R	P	SHA
RBR52#65702%&	65,700	1/2	L, U	T, Q, A, B	R	P	SHA
RBR52#66502%&	66,500	1/2	L, U	T, Q, A, B	R	P	SHA

RBR52#67302%&	67,300	1/2	L, U	T, Q, A, B	R	P	SHA
RBR52#68102%&	68,100	1/2	L, U	T, Q, A, B	R	P	SHA
RBR52#69002%&	69,000	1/2	L, U	T, Q, A, B	R	P	SHA
RBR52#69802%&	69,800	1/2	L, U	T, Q, A, B	R	P	SHA
RBR52#70602%&	70,600	1/2	L, U	T, Q, A, B	R	P	SHA
	Resistance	Power	Terminal	Resistance	Level 1	Level 2	
Part Number	Value (Ohms)	Rating (W)	Characteristic (#)	Tolerance (%)	(FRL)(&)	(FRL)(&)	Manufacturer
RBR52#71502%&	71,500	1/2	L, U	T, Q, A, B	R	P	SHA
RBR52#72302%&	72,300	1/2	L, U	T, Q, A, B	R	P	SHA
RBR52#73202%&	73,200	1/2	L, U	T, Q, A, B	R	P	SHA
RBR52#74102%&	74,100	1/2	L, U	T, Q, A, B	R	P	SHA
RBR52#75002%&	75,000	1/2	L, U	T, Q, A, B	R	P	SHA
RBR52#75902%&	75,900	1/2	L, U	T, Q, A, B	R	P	SHA
RBR52#76802%&	76,800	1/2	L, U	T, Q, A, B	R	P	SHA
RBR52#77702%&	77,700	1/2	L, U	T, Q, A, B	R	P	SHA
RBR52#78702%&	78,700	1/2	L, U	T, Q, A, B	R	P	SHA
RBR52#79602%&	79,600	1/2	L, U	T, Q, A, B	R	P	SHA
RBR52#80602%&	80,600	1/2	L, U	T, Q, A, B	R	P	SHA
RBR52#81602%&	81,600	1/2	L, U	T, Q, A, B	R	P	SHA
RBR52#82502%&	82,500	1/2	L, U	T, Q, A, B	R	P	SHA
RBR52#83502%&	83,500	1/2	L, U	T, Q, A, B	R	P	SHA
	Resistance	Power	Terminal	Resistance	Level 1	Level 2	
Part Number	Value (Ohms)	Rating (W)	Characteristic (#)	Tolerance (%)	(FRL)(&)	(FRL)(&)	Manufacturer
RBR52#84502%&	84,500	1/2	L, U	T, Q, A, B	R	P	SHA
RBR52#85602%&	85,600	1/2	L, U	T, Q, A, B	R	P	SHA
RBR52#86602%&	86,600	1/2	L, U	T, Q, A, B	R	P	SHA
RBR52#87602%&	87,600	1/2	L, U	T, Q, A, B	R	P	SHA
RBR52#88702%&	88,700	1/2	L, U	T, Q, A, B	R	P	SHA
RBR52#89802%&	89,800	1/2	L, U	T, Q, A, B	R	P	SHA
RBR52#90902%&	90,900	1/2	L, U	T, Q, A, B	R	P	SHA
RBR52#92002%&	92,000	1/2	L, U	T, Q, A, B	R	P	SHA
RBR52#93102%&	93,100	1/2	L, U	T, Q, A, B	R	P	SHA
RBR52#94202%&	94,200	1/2	L, U	T, Q, A, B	R	P	SHA
RBR52#95302%&	95,300	1/2	L, U	T, Q, A, B	R	P	SHA
RBR52#96502%&	96,500	1/2	L, U	T, Q, A, B	R	P	SHA
RBR52#97602%&	97,600	1/2	L, U	T, Q, A, B	R	P	SHA
RBR52#98802%&	98,800	1/2	L, U	T, Q, A, B	R	P	SHA
	Resistance	Power	Terminal	Resistance	Level 1	Level 2	
Part Number	Value (Ohms)	Rating (W)	Characteristic (#)	Tolerance (%)	(FRL)(&)	(FRL)(&)	Manufacturer

RBR52 Wirewound Resistors: 100,000 Ohms through 988,000 Ohms

	Resistance	Power	Terminal	Resistance	Level 1	Level 2	
Part Number	Value (Ohms)	Rating (W)	Characteristic (#)	Tolerance (%)	(FRL)(&)	(FRL)(&)	Manufacturer
RBR52#10002%&	100,000	1/2	L, U	T, Q, A, B	R	P	SHA

RBR52#10102%&	101,000	1/2	L, U	T, Q, A, B	R	P	SHA
RBR52#10202%&	102,000	1/2	L, U	T, Q, A, B	R	P	SHA
RBR52#10402%&	104,000	1/2	L, U	T, Q, A, B	R	P	SHA
RBR52#10502%&	105,000	1/2	L, U	T, Q, A, B	R	P	SHA
RBR52#10602%&	106,000	1/2	L, U	T, Q, A, B	R	P	SHA
RBR52#10702%&	107,000	1/2	L, U	T, Q, A, B	R	P	SHA
RBR52#10902%&	109,000	1/2	L, U	T, Q, A, B	R	P	SHA
RBR52#11002%&	110,000	1/2	L, U	T, Q, A, B	R	P	SHA
RBR52#11102%&	111,000	1/2	L, U	T, Q, A, B	R	P	SHA
RBR52#11302%&	113,000	1/2	L, U	T, Q, A, B	R	P	SHA
RBR52#11402%&	114,000	1/2	L, U	T, Q, A, B	R	P	SHA
RBR52#11502%&	115,000	1/2	L, U	T, Q, A, B	R	P	SHA
RBR52#11702%&	117,000	1/2	L, U	T, Q, A, B	R	P	SHA
	Resistance	Power	Terminal	Resistance	Level 1	Level 2	
Part Number	Value (Ohms)	Rating (W)	Characteristic (#)	Tolerance (%)	(FRL)(&)	(FRL)(&)	Manufacturer
RBR52#11802%&	118,000	1/2	L, U	T, Q, A, B	R	P	SHA
RBR52#12002%&	120,000	1/2	L, U	T, Q, A, B	R	P	SHA
RBR52#12102%&	121,000	1/2	L, U	T, Q, A, B	R	P	SHA
RBR52#12302%&	123,000	1/2	L, U	T, Q, A, B	R	P	SHA
RBR52#12402%&	124,000	1/2	L, U	T, Q, A, B	R	P	SHA
RBR52#12602%&	126,000	1/2	L, U	T, Q, A, B	R	P	SHA
RBR52#12702%&	127,000	1/2	L, U	T, Q, A, B	R	P	SHA
RBR52#12902%&	129,000	1/2	L, U	T, Q, A, B	R	P	SHA
RBR52#13002%&	130,000	1/2	L, U	T, Q, A, B	R	P	SHA
RBR52#13202%&	132,000	1/2	L, U	T, Q, A, B	R	P	SHA
RBR52#13302%&	133,000	1/2	L, U	T, Q, A, B	R	P	SHA
RBR52#13502%&	135,000	1/2	L, U	T, Q, A, B	R	P	SHA
RBR52#13702%&	137,000	1/2	L, U	T, Q, A, B	R	P	SHA
RBR52#13802%&	138,000	1/2	L, U	T, Q, A, B	R	P	SHA
	Resistance	Power	Terminal	Resistance	Level 1	Level 2	
Part Number	Value (Ohms)	Rating (W)	Characteristic (#)	Tolerance (%)	(FRL)(&)	(FRL)(&)	Manufacturer
RBR52#14002%&	140,000	1/2	L, U	T, Q, A, B	R	P	SHA
RBR52#14202%&	142,000	1/2	L, U	T, Q, A, B	R	P	SHA
RBR52#14302%&	143,000	1/2	L, U	T, Q, A, B	R	P	SHA
RBR52#14502%&	145,000	1/2	L, U	T, Q, A, B	R	P	SHA
RBR52#14702%&	147,000	1/2	L, U	T, Q, A, B	R	P	SHA
RBR52#14902%&	149,000	1/2	L, U	T, Q, A, B	R	P	SHA
RBR52#15002%&	150,000	1/2	L, U	T, Q, A, B	R	P	SHA
RBR52#15202%&	152,000	1/2	L, U	T, Q, A, B	R	P	SHA
RBR52#15402%&	154,000	1/2	L, U	T, Q, A, B	R	P	SHA
RBR52#15602%&	156,000	1/2	L, U	T, Q, A, B	R	P	SHA
RBR52#15802%&	158,000	1/2	L, U	T, Q, A, B	R	P	SHA
RBR52#16002%&	160,000	1/2	L, U	T, Q, A, B	R	P	SHA
RBR52#16202%&	162,000	1/2	L, U	T, Q, A, B	R	P	SHA
RBR52#16402%&	164,000	1/2	L, U	T, Q, A, B	R	P	SHA
	Resistance	Power	Terminal	Resistance	Level 1	Level 2	
Part Number	Value (Ohms)	Rating (W)	Characteristic (#)	Tolerance (%)	(FRL)(&)	(FRL)(&)	Manufacturer

RBR52#16502%&	165,000	1/2	L, U	T, Q, A, B	R	P	SHA
RBR52#16702%&	167,000	1/2	L, U	T, Q, A, B	R	P	SHA
RBR52#16902%&	169,000	1/2	L, U	T, Q, A, B	R	P	SHA
RBR52#17202%&	172,000	1/2	L, U	T, Q, A, B	R	P	SHA
RBR52#17402%&	174,000	1/2	L, U	T, Q, A, B	R	P	SHA
RBR52#17602%&	176,000	1/2	L, U	T, Q, A, B	R	P	SHA
RBR52#17802%&	178,000	1/2	L, U	T, Q, A, B	R	P	SHA
RBR52#18002%&	180,000	1/2	L, U	T, Q, A, B	R	P	SHA
RBR52#18202%&	182,000	1/2	L, U	T, Q, A, B	R	P	SHA
RBR52#18402%&	184,000	1/2	L, U	T, Q, A, B	R	P	SHA
RBR52#18702%&	187,000	1/2	L, U	T, Q, A, B	R	P	SHA
RBR52#18902%&	189,000	1/2	L, U	T, Q, A, B	R	P	SHA
RBR52#19102%&	191,000	1/2	L, U	T, Q, A, B	R	P	SHA
RBR52#19302%&	193,000	1/2	L, U	T, Q, A, B	R	P	SHA
	Resistance	Power	Terminal	Resistance	Level 1	Level 2	
Part Number	Value (Ohms)	Rating (W)	Characteristic (#)	Tolerance (%)	(FRL)(&)	(FRL)(&)	Manufacturer
RBR52#19602%&	196,000	1/2	L, U	T, Q, A, B	R	P	SHA
RBR52#19802%&	198,000	1/2	L, U	T, Q, A, B	R	P	SHA
RBR52#20002%&	200,000	1/2	L, U	T, Q, A, B	R	P	SHA
RBR52#20302%&	203,000	1/2	L, U	T, Q, A, B	R	P	SHA
RBR52#20502%&	205,000	1/2	L, U	T, Q, A, B	R	P	SHA
RBR52#20802%&	208,000	1/2	L, U	T, Q, A, B	R	P	SHA
RBR52#21002%&	210,000	1/2	L, U	T, Q, A, B	R	P	SHA
RBR52#21302%&	213,000	1/2	L, U	T, Q, A, B	R	P	SHA
RBR52#21502%&	215,000	1/2	L, U	T, Q, A, B	R	P	SHA
RBR52#21802%&	218,000	1/2	L, U	T, Q, A, B	R	P	SHA
RBR52#22102%&	221,000	1/2	L, U	T, Q, A, B	R	P	SHA
RBR52#22302%&	223,000	1/2	L, U	T, Q, A, B	R	P	SHA
RBR52#22602%&	226,000	1/2	L, U	T, Q, A, B	R	P	SHA
RBR52#22902%&	229,000	1/2	L, U	T, Q, A, B	R	P	SHA
	Resistance	Power	Terminal	Resistance	Level 1	Level 2	
Part Number	Value (Ohms)	Rating (W)	Characteristic (#)	Tolerance (%)	(FRL)(&)	(FRL)(&)	Manufacturer
RBR52#23202%&	232,000	1/2	L, U	T, Q, A, B	R	P	SHA
RBR52#23402%&	234,000	1/2	L, U	T, Q, A, B	R	P	SHA
RBR52#23702%&	237,000	1/2	L, U	T, Q, A, B	R	P	SHA
RBR52#24002%&	240,000	1/2	L, U	T, Q, A, B	R	P	SHA
RBR52#24302%&	243,000	1/2	L, U	T, Q, A, B	R	P	SHA
RBR52#24602%&	246,000	1/2	L, U	T, Q, A, B	R	P	SHA
RBR52#24902%&	249,000	1/2	L, U	T, Q, A, B	R	P	SHA
RBR52#25202%&	252,000	1/2	L, U	T, Q, A, B	R	P	SHA
RBR52#25502%&	255,000	1/2	L, U	T, Q, A, B	R	P	SHA
RBR52#25802%&	258,000	1/2	L, U	T, Q, A, B	R	P	SHA
RBR52#26102%&	261,000	1/2	L, U	T, Q, A, B	R	P	SHA
RBR52#26402%&	264,000	1/2	L, U	T, Q, A, B	R	P	SHA
RBR52#26702%&	267,000	1/2	L, U	T, Q, A, B	R	P	SHA
RBR52#27102%&	271,000	1/2	L, U	T, Q, A, B	R	P	SHA
	Resistance	Power	Terminal	Resistance	Level 1	Level 2	

Part Number	Value (Ohms)	Rating (W)	Characteristic (#)	Tolerance (%)	(FRL)(&)	(FRL)(&)	Manufacturer
RBR52#27402%&	274,000	1/2	L, U	T, Q, A, B	R	P	SHA
RBR52#27702%&	277,000	1/2	L, U	T, Q, A, B	R	P	SHA
RBR52#28002%&	280,000	1/2	L, U	T, Q, A, B	R	P	SHA
RBR52#28402%&	284,000	1/2	L, U	T, Q, A, B	R	P	SHA
RBR52#28702%&	287,000	1/2	L, U	T, Q, A, B	R	P	SHA
RBR52#29102%&	291,000	1/2	L, U	T, Q, A, B	R	P	SHA
RBR52#29402%&	294,000	1/2	L, U	T, Q, A, B	R	P	SHA
RBR52#29802%&	298,000	1/2	L, U	T, Q, A, B	R	P	SHA
RBR52#30102%&	301,000	1/2	L, U	T, Q, A, B	R	P	SHA
RBR52#30502%&	305,000	1/2	L, U	T, Q, A, B	R	P	SHA
RBR52#30902%&	309,000	1/2	L, U	T, Q, A, B	R	P	SHA
RBR52#31202%&	312,000	1/2	L, U	T, Q, A, B	R	P	SHA
	Resistance	Power	Terminal	Resistance	Level 1	Level 2	
Part Number	Value (Ohms)	Rating (W)	Characteristic (#)	Tolerance (%)	(FRL)(&)	(FRL)(&)	Manufacturer
RBR52#31602%&	316,000	1/2	L, U	T, Q, A, B	R	P	SHA
RBR52#32002%&	320,000	1/2	L, U	T, Q, A, B	R	P	SHA
RBR52#32402%&	324,000	1/2	L, U	T, Q, A, B	R	P	SHA
RBR52#32802%&	328,000	1/2	L, U	T, Q, A, B	R	P	SHA
RBR52#33202%&	332,000	1/2	L, U	T, Q, A, B	R	P	SHA
RBR52#33602%&	336,000	1/2	L, U	T, Q, A, B	R	P	SHA
RBR52#34002%&	340,000	1/2	L, U	T, Q, A, B	R	P	SHA
RBR52#34402%&	344,000	1/2	L, U	T, Q, A, B	R	P	SHA
RBR52#34802%&	348,000	1/2	L, U	T, Q, A, B	R	P	SHA
RBR52#35202%&	352,000	1/2	L, U	T, Q, A, B	R	P	SHA
RBR52#35702%&	357,000	1/2	L, U	T, Q, A, B	R	P	SHA
RBR52#36102%&	361,000	1/2	L, U	T, Q, A, B	R	P	SHA
RBR52#36502%&	365,000	1/2	L, U	T, Q, A, B	R	P	SHA
RBR52#37002%&	370,000	1/2	L, U	T, Q, A, B	R	P	SHA
	Resistance	Power	Terminal	Resistance	Level 1	Level 2	
Part Number	Value (Ohms)	Rating (W)	Characteristic (#)	Tolerance (%)	(FRL)(&)	(FRL)(&)	Manufacturer
RBR52#37402%&	374,000	1/2	L, U	T, Q, A, B	R	P	SHA
RBR52#37902%&	379,000	1/2	L, U	T, Q, A, B	R	P	SHA
RBR52#38302%&	383,000	1/2	L, U	T, Q, A, B	R	P	SHA
RBR52#38802%&	388,000	1/2	L, U	T, Q, A, B	R	P	SHA
RBR52#39202%&	392,000	1/2	L, U	T, Q, A, B	R	P	SHA
RBR52#39702%&	397,000	1/2	L, U	T, Q, A, B	R	P	SHA
RBR52#40202%&	402,000	1/2	L, U	T, Q, A, B	R	P	SHA
RBR52#40702%&	407,000	1/2	L, U	T, Q, A, B	R	P	SHA
RBR52#41202%&	412,000	1/2	L, U	T, Q, A, B	R	P	SHA
RBR52#41702%&	417,000	1/2	L, U	T, Q, A, B	R	P	SHA
RBR52#42202%&	422,000	1/2	L, U	T, Q, A, B	R	P	SHA
RBR52#42702%&	427,000	1/2	L, U	T, Q, A, B	R	P	SHA
RBR52#43202%&	432,000	1/2	L, U	T, Q, A, B	R	P	SHA
RBR52#43702%&	437,000	1/2	L, U	T, Q, A, B	R	P	SHA
	Resistance	Power	Terminal	Resistance	Level 1	Level 2	
Part Number	Value (Ohms)	Rating (W)	Characteristic (#)	Tolerance (%)	(FRL)(&)	(FRL)(&)	Manufacturer

RBR52#44202%&	442,000	1/2	L, U	T, Q, A, B	R	P	SHA
RBR52#44802%&	448,000	1/2	L, U	T, Q, A, B	R	P	SHA
RBR52#45302%&	453,000	1/2	L, U	T, Q, A, B	R	P	SHA
RBR52#45902%&	459,000	1/2	L, U	T, Q, A, B	R	P	SHA
RBR52#46402%&	464,000	1/2	L, U	T, Q, A, B	R	P	SHA
RBR52#47002%&	470,000	1/2	L, U	T, Q, A, B	R	P	SHA
RBR52#47502%&	475,000	1/2	L, U	T, Q, A, B	R	P	SHA
RBR52#48102%&	481,000	1/2	L, U	T, Q, A, B	R	P	SHA
RBR52#48702%&	487,000	1/2	L, U	T, Q, A, B	R	P	SHA
RBR52#49302%&	493,000	1/2	L, U	T, Q, A, B	R	P	SHA
RBR52#49902%&	499,000	1/2	L, U	T, Q, A, B	R	P	SHA
RBR52#50502%&	505,000	1/2	L, U	T, Q, A, B	R	P	SHA
RBR52#51102%&	511,000	1/2	L, U	T, Q, A, B	R	P	SHA
RBR52#51702%&	517,000	1/2	L, U	T, Q, A, B	R	P	SHA
	Resistance	Power	Terminal	Resistance	Level 1	Level 2	
Part Number	Value (Ohms)	Rating (W)	Characteristic (#)	Tolerance (%)	(FRL)(&)	(FRL)(&)	Manufacturer
RBR52#52302%&	523,000	1/2	L, U	T, Q, A, B	R	P	SHA
RBR52#53002%&	530,000	1/2	L, U	T, Q, A, B	R	P	SHA
RBR52#53602%&	536,000	1/2	L, U	T, Q, A, B	R	P	SHA
RBR52#54202%&	542,000	1/2	L, U	T, Q, A, B	R	P	SHA
RBR52#54902%&	549,000	1/2	L, U	T, Q, A, B	R	P	SHA
RBR52#55602%&	556,000	1/2	L, U	T, Q, A, B	R	P	SHA
RBR52#56202%&	562,000	1/2	L, U	T, Q, A, B	R	P	SHA
RBR52#56902%&	569,000	1/2	L, U	T, Q, A, B	R	P	SHA
RBR52#57602%&	576,000	1/2	L, U	T, Q, A, B	R	P	SHA
RBR52#58302%&	583,000	1/2	L, U	T, Q, A, B	R	P	SHA
RBR52#59002%&	590,000	1/2	L, U	T, Q, A, B	R	P	SHA
RBR52#59702%&	597,000	1/2	L, U	T, Q, A, B	R	P	SHA
RBR52#60402%&	604,000	1/2	L, U	T, Q, A, B	R	P	SHA
RBR52#61202%&	612,000	1/2	L, U	T, Q, A, B	R	P	SHA
	Resistance	Power	Terminal	Resistance	Level 1	Level 2	
Part Number	Value (Ohms)	Rating (W)	Characteristic (#)	Tolerance (%)	(FRL)(&)	(FRL)(&)	Manufacturer
RBR52#61902%&	619,000	1/2	L, U	T, Q, A, B	R	P	SHA
RBR52#62602%&	626,000	1/2	L, U	T, Q, A, B	R	P	SHA
RBR52#63402%&	634,000	1/2	L, U	T, Q, A, B	R	P	SHA
RBR52#64202%&	642,000	1/2	L, U	T, Q, A, B	R	P	SHA
RBR52#64902%&	649,000	1/2	L, U	T, Q, A, B	R	P	SHA
RBR52#65702%&	657,000	1/2	L, U	T, Q, A, B	R	P	SHA
RBR52#66502%&	665,000	1/2	L, U	T, Q, A, B	R	P	SHA
RBR52#67302%&	673,000	1/2	L, U	T, Q, A, B	R	P	SHA
RBR52#68102%&	681,000	1/2	L, U	T, Q, A, B	R	P	SHA
RBR52#69002%&	690,000	1/2	L, U	T, Q, A, B	R	P	SHA
RBR52#69802%&	698,000	1/2	L, U	T, Q, A, B	R	P	SHA
RBR52#70602%&	706,000	1/2	L, U	T, Q, A, B	R	P	SHA
	Resistance	Power	Terminal	Resistance	Level 1	Level 2	
Part Number	Value (Ohms)	Rating (W)	Characteristic (#)	Tolerance (%)	(FRL)(&)	(FRL)(&)	Manufacturer
RBR52#71502%&	715,000	1/2	L, U	T, Q, A, B	R	P	SHA

RBR52#72302%&	723,000	1/2	L, U	T, Q, A, B	R	P	SHA
RBR52#73202%&	732,000	1/2	L, U	T, Q, A, B	R	P	SHA
RBR52#74102%&	741,000	1/2	L, U	T, Q, A, B	R	P	SHA
RBR52#75002%&	750,000	1/2	L, U	T, Q, A, B	R	P	SHA
RBR52#75902%&	759,000	1/2	L, U	T, Q, A, B	R	P	SHA
RBR52#76802%&	768,000	1/2	L, U	T, Q, A, B	R	P	SHA
RBR52#77702%&	777,000	1/2	L, U	T, Q, A, B	R	P	SHA
RBR52#78702%&	787,000	1/2	L, U	T, Q, A, B	R	P	SHA
RBR52#79602%&	796,000	1/2	L, U	T, Q, A, B	R	P	SHA
RBR52#80602%&	806,000	1/2	L, U	T, Q, A, B	R	P	SHA
RBR52#81602%&	816,000	1/2	L, U	T, Q, A, B	R	P	SHA
RBR52#82502%&	825,000	1/2	L, U	T, Q, A, B	R	P	SHA
RBR52#83502%&	835,000	1/2	L, U	T, Q, A, B	R	P	SHA
	Resistance	Power	Terminal	Resistance	Level 1	Level 2	
Part Number	Value (Ohms)	Rating (W)	Characteristic (#)	Tolerance (%)	(FRL)(&)	(FRL)(&)	Manufacturer
RBR52#84502%&	845,000	1/2	L, U	T, Q, A, B	R	P	SHA
RBR52#85602%&	856,000	1/2	L, U	T, Q, A, B	R	P	SHA
RBR52#86602%&	866,000	1/2	L, U	T, Q, A, B	R	P	SHA
RBR52#87602%&	876,000	1/2	L, U	T, Q, A, B	R	P	SHA
RBR52#88702%&	887,000	1/2	L, U	T, Q, A, B	R	P	SHA
RBR52#89802%&	898,000	1/2	L, U	T, Q, A, B	R	P	SHA
RBR52#90902%&	909,000	1/2	L, U	T, Q, A, B	R	P	SHA
RBR52#92002%&	920,000	1/2	L, U	T, Q, A, B	R	P	SHA
RBR52#93102%&	931,000	1/2	L, U	T, Q, A, B	R	P	SHA
RBR52#94202%&	942,000	1/2	L, U	T, Q, A, B	R	P	SHA
RBR52#95302%&	953,000	1/2	L, U	T, Q, A, B	R	P	SHA
RBR52#96502%&	965,000	1/2	L, U	T, Q, A, B	R	P	SHA
RBR52#97602%&	976,000	1/2	L, U	T, Q, A, B	R	P	SHA
RBR52#98802%&	988,000	1/2	L, U	T, Q, A, B	R	P	SHA
	Resistance	Power	Terminal	Resistance	Level 1	Level 2	
Part Number	Value (Ohms)	Rating (W)	Characteristic (#)	Tolerance (%)	(FRL)(&)	(FRL)(&)	Manufacturer

RBR52 Wirewound Resistors: 1,000,000 Ohms through 1,210,000 Ohms

	Resistance	Power	Terminal	Resistance	Level 1	Level 2	
Part Number	Value (Ohms)	Rating (W)	Characteristic (#)	Tolerance (%)	(FRL)(&)	(FRL)(&)	Manufacturer
RBR52#10003%&	1,000,000	1/2	L, U	T, Q, A, B	R	P	SHA
RBR52#10103%&	1,010,000	1/2	L, U	T, Q, A, B	R	P	SHA
RBR52#10203%&	1,020,000	1/2	L, U	T, Q, A, B	R	P	SHA
RBR52#10403%&	1,040,000	1/2	L, U	T, Q, A, B	R	P	SHA
RBR52#10503%&	1,050,000	1/2	L, U	T, Q, A, B	R	P	SHA
RBR52#10603%&	1,060,000	1/2	L, U	T, Q, A, B	R	P	SHA
RBR52#10703%&	1,070,000	1/2	L, U	T, Q, A, B	R	P	SHA
RBR52#10903%&	1,090,000	1/2	L, U	T, Q, A, B	R	P	SHA
RBR52#11003%&	1,100,000	1/2	L, U	T, Q, A, B	R	P	SHA

RBR52#11103%&	1,110,000	1/2	L, U	T, Q, A, B	R	P	SHA
RBR52#11303%&	1,130,000	1/2	L, U	T, Q, A, B	R	P	SHA
RBR52#11403%&	1,140,000	1/2	L, U	T, Q, A, B	R	P	SHA
RBR52#11503%&	1,150,000	1/2	L, U	T, Q, A, B	R	P	SHA
RBR52#11703%&	1,170,000	1/2	L, U	T, Q, A, B	R	P	SHA
	Resistance	Power	Terminal	Resistance	Level 1	Level 2	
Part Number	Value (Ohms)	Rating (W)	Characteristic (#)	Tolerance (%)	(FRL)(&)	(FRL)(&)	Manufacturer
RBR52#11803%&	1,180,000	1/2	L, U	T, Q, A, B	R	P	SHA
RBR52#12003%&	1,200,000	1/2	L, U	T, Q, A, B	R	P	SHA
RBR52#12103%&	1,210,000	1/2	L, U	T, Q, A, B	R	P	SHA

RBR54 Wirewound Resistors

	Resistance	Power	Terminal	Resistance	Level 1	Level 2	
Part Number	Value (Ohms)	Rating (W)	Characteristic (#)	Tolerance (%)	(FRL)(&)	(FRL)(&)	Manufacturer
RBR54%4R990#&	4.990	1/4	L, U	T, Q, A, B	R	P	SHA, ULT
RBR54%5R050#&	5.050	1/4	L, U	T, Q, A, B	R	P	SHA, ULT
RBR54%5R110#&	5.110	1/4	L, U	T, Q, A, B	R	P	SHA, ULT
RBR54%5R170#&	5.170	1/4	L, U	T, Q, A, B	R	P	SHA, ULT
RBR54%5R230#&	5.230	1/4	L, U	T, Q, A, B	R	P	SHA, ULT
RBR54%5R300#&	5.300	1/4	L, U	T, Q, A, B	R	P	SHA, ULT
RBR54%5R360#&	5.360	1/4	L, U	T, Q, A, B	R	P	SHA, ULT
RBR54%5R420#&	5.420	1/4	L, U	T, Q, A, B	R	P	SHA, ULT
RBR54%5R490#&	5.490	1/4	L, U	T, Q, A, B	R	P	SHA, ULT
RBR54%5R560#&	5.560	1/4	L, U	T, Q, A, B	R	P	SHA, ULT
RBR54%5R620#&	5.620	1/4	L, U	T, Q, A, B	R	P	SHA, ULT
RBR54%5R690#&	5.690	1/4	L, U	T, Q, A, B	R	P	SHA, ULT
RBR54%5R760#&	5.760	1/4	L, U	T, Q, A, B	R	P	SHA, ULT
RBR54%5R830#&	5.830	1/4	L, U	T, Q, A, B	R	P	SHA, ULT
RBR54%5R900#&	5.900	1/4	L, U	T, Q, A, B	R	P	SHA, ULT
RBR54%5R970#&	5.970	1/4	L, U	T, Q, A, B	R	P	SHA, ULT
RBR54%6R040#&	6.040	1/4	L, U	T, Q, A, B	R	P	SHA, ULT
RBR54%6R120#&	6.120	1/4	L, U	T, Q, A, B	R	P	SHA, ULT
RBR54%6R190#&	6.190	1/4	L, U	T, Q, A, B	R	P	SHA, ULT
RBR54%6R260#&	6.260	1/4	L, U	T, Q, A, B	R	P	SHA, ULT
RBR54%6R340#&	6.340	1/4	L, U	T, Q, A, B	R	P	SHA, ULT
RBR54%6R420#&	6.420	1/4	L, U	T, Q, A, B	R	P	SHA, ULT
RBR54%6R490#&	6.490	1/4	L, U	T, Q, A, B	R	P	SHA, ULT
RBR54%6R570#&	6.570	1/4	L, U	T, Q, A, B	R	P	SHA, ULT
RBR54%6R650#&	6.650	1/4	L, U	T, Q, A, B	R	P	SHA, ULT
RBR54%6R730#&	6.730	1/4	L, U	T, Q, A, B	R	P	SHA, ULT
RBR54%6R810#&	6.810	1/4	L, U	T, Q, A, B	R	P	SHA, ULT
RBR54%6R900#&	6.900	1/4	L, U	T, Q, A, B	R	P	SHA, ULT
RBR54%6R980#&	6.980	1/4	L, U	T, Q, A, B	R	P	SHA, ULT
RBR54%7R060#&	7.060	1/4	L, U	T, Q, A, B	R	P	SHA, ULT

RBR54%7R150#&	7.150	1/4	L, U	T, Q, A, B	R	P	SHA, ULT
RBR54%7R230#&	7.230	1/4	L, U	T, Q, A, B	R	P	SHA, ULT
RBR54%7R320#&	7.320	1/4	L, U	T, Q, A, B	R	P	SHA, ULT
RBR54%7R410#&	7.410	1/4	L, U	T, Q, A, B	R	P	SHA, ULT
RBR54%7R500#&	7.500	1/4	L, U	T, Q, A, B	R	P	SHA, ULT
RBR54%7R590#&	7.590	1/4	L, U	T, Q, A, B	R	P	SHA, ULT
RBR54%7R680#&	7.680	1/4	L, U	T, Q, A, B	R	P	SHA, ULT
RBR54%7R770#&	7.770	1/4	L, U	T, Q, A, B	R	P	SHA, ULT
RBR54%7R870#&	7.870	1/4	L, U	T, Q, A, B	R	P	SHA, ULT
RBR54%7R960#&	7.960	1/4	L, U	T, Q, A, B	R	P	SHA, ULT
RBR54%8R060#&	8.060	1/4	L, U	T, Q, A, B	R	P	SHA, ULT
RBR54%8R160#&	8.160	1/4	L, U	T, Q, A, B	R	P	SHA, ULT
RBR54%8R250#&	8.250	1/4	L, U	T, Q, A, B	R	P	SHA, ULT
RBR54%8R350#&	8.350	1/4	L, U	T, Q, A, B	R	P	SHA, ULT
RBR54%8R450#&	8.450	1/4	L, U	T, Q, A, B	R	P	SHA, ULT
RBR54%8R560#&	8.560	1/4	L, U	T, Q, A, B	R	P	SHA, ULT
RBR54%8R660#&	8.660	1/4	L, U	T, Q, A, B	R	P	SHA, ULT
RBR54%8R760#&	8.760	1/4	L, U	T, Q, A, B	R	P	SHA, ULT
RBR54%8R870#&	8.870	1/4	L, U	T, Q, A, B	R	P	SHA, ULT
RBR54%8R980#&	8.980	1/4	L, U	T, Q, A, B	R	P	SHA, ULT
RBR54%9R090#&	9.090	1/4	L, U	T, Q, A, B	R	P	SHA, ULT
RBR54%9R200#&	9.200	1/4	L, U	T, Q, A, B	R	P	SHA, ULT
RBR54%9R310#&	9.310	1/4	L, U	T, Q, A, B	R	P	SHA, ULT
RBR54%9R420#&	9.420	1/4	L, U	T, Q, A, B	R	P	SHA, ULT
RBR54%9R530#&	9.530	1/4	L, U	T, Q, A, B	R	P	SHA, ULT
RBR54%9R650#&	9.650	1/4	L, U	T, Q, A, B	R	P	SHA, ULT
RBR54%9R760#&	9.760	1/4	L, U	T, Q, A, B	R	P	SHA, ULT
RBR54%9R880#&	9.880	1/4	L, U	T, Q, A, B	R	P	SHA, ULT
RBR54%10R00#&	10.00	1/4	L, U	T, Q, A, B	R	P	SHA, ULT
RBR54%10R10#&	10.10	1/4	L, U	T, Q, A, B	R	P	SHA, ULT
RBR54%10R20#&	10.20	1/4	L, U	T, Q, A, B	R	P	SHA, ULT
RBR54%10R40#&	10.40	1/4	L, U	T, Q, A, B	R	P	SHA, ULT
RBR54%10R50#&	10.50	1/4	L, U	T, Q, A, B	R	P	SHA, ULT
RBR54%10R60#&	10.60	1/4	L, U	T, Q, A, B	R	P	SHA, ULT
RBR54%10R70#&	10.70	1/4	L, U	T, Q, A, B	R	P	SHA, ULT
RBR54%10R90#&	10.90	1/4	L, U	T, Q, A, B	R	P	SHA, ULT
RBR54%11R00#&	11.00	1/4	L, U	T, Q, A, B	R	P	SHA, ULT
RBR54%11R10#&	11.10	1/4	L, U	T, Q, A, B	R	P	SHA, ULT
RBR54%11R30#&	11.30	1/4	L, U	T, Q, A, B	R	P	SHA, ULT
RBR54%11R40#&	11.40	1/4	L, U	T, Q, A, B	R	P	SHA, ULT
RBR54%11R50#&	11.50	1/4	L, U	T, Q, A, B	R	P	SHA, ULT
RBR54%11R70#&	11.70	1/4	L, U	T, Q, A, B	R	P	SHA, ULT
RBR54%11R80#&	11.80	1/4	L, U	T, Q, A, B	R	P	SHA, ULT
RBR54%12R00#&	12.00	1/4	L, U	T, Q, A, B	R	P	SHA, ULT
RBR54%12R10#&	12.10	1/4	L, U	T, Q, A, B	R	P	SHA, ULT
RBR54%12R30#&	12.30	1/4	L, U	T, Q, A, B	R	P	SHA, ULT
RBR54%12R40#&	12.40	1/4	L, U	T, Q, A, B	R	P	SHA, ULT

RBR54%12R60#&	12.60	1/4	L, U	T, Q, A, B	R	P	SHA, ULT
RBR54%12R70#&	12.70	1/4	L, U	T, Q, A, B	R	P	SHA, ULT
RBR54%12R90#&	12.90	1/4	L, U	T, Q, A, B	R	P	SHA, ULT
RBR54%13R00#&	13.00	1/4	L, U	T, Q, A, B	R	P	SHA, ULT
RBR54%13R20#&	13.20	1/4	L, U	T, Q, A, B	R	P	SHA, ULT
RBR54%13R30#&	13.30	1/4	L, U	T, Q, A, B	R	P	SHA, ULT
RBR54%13R50#&	13.50	1/4	L, U	T, Q, A, B	R	P	SHA, ULT
RBR54%13R70#&	13.70	1/4	L, U	T, Q, A, B	R	P	SHA, ULT
RBR54%13R80#&	13.80	1/4	L, U	T, Q, A, B	R	P	SHA, ULT
RBR54%14R00#&	14.00	1/4	L, U	T, Q, A, B	R	P	SHA, ULT
RBR54%14R20#&	14.20	1/4	L, U	T, Q, A, B	R	P	SHA, ULT
RBR54%14R30#&	14.30	1/4	L, U	T, Q, A, B	R	P	SHA, ULT
RBR54%14R50#&	14.50	1/4	L, U	T, Q, A, B	R	P	SHA, ULT
RBR54%14R70#&	14.70	1/4	L, U	T, Q, A, B	R	P	SHA, ULT
RBR54%14R90#&	14.90	1/4	L, U	T, Q, A, B	R	P	SHA, ULT
RBR54%15R00#&	15.00	1/4	L, U	T, Q, A, B	R	P	SHA, ULT
RBR54%15R20#&	15.20	1/4	L, U	T, Q, A, B	R	P	SHA, ULT
RBR54%15R40#&	15.40	1/4	L, U	T, Q, A, B	R	P	SHA, ULT
RBR54%15R60#&	15.60	1/4	L, U	T, Q, A, B	R	P	SHA, ULT
RBR54%15R80#&	15.80	1/4	L, U	T, Q, A, B	R	P	SHA, ULT
RBR54%16R00#&	16.00	1/4	L, U	T, Q, A, B	R	P	SHA, ULT
RBR54%16R20#&	16.20	1/4	L, U	T, Q, A, B	R	P	SHA, ULT
RBR54%16R40#&	16.40	1/4	L, U	T, Q, A, B	R	P	SHA, ULT
RBR54%16R50#&	16.50	1/4	L, U	T, Q, A, B	R	P	SHA, ULT
RBR54%16R70#&	16.70	1/4	L, U	T, Q, A, B	R	P	SHA, ULT
RBR54%16R90#&	16.90	1/4	L, U	T, Q, A, B	R	P	SHA, ULT
RBR54%17R20#&	17.20	1/4	L, U	T, Q, A, B	R	P	SHA, ULT
RBR54%17R40#&	17.40	1/4	L, U	T, Q, A, B	R	P	SHA, ULT
RBR54%17R60#&	17.60	1/4	L, U	T, Q, A, B	R	P	SHA, ULT
RBR54%17R80#&	17.80	1/4	L, U	T, Q, A, B	R	P	SHA, ULT
RBR54%18R00#&	18.00	1/4	L, U	T, Q, A, B	R	P	SHA, ULT
RBR54%18R20#&	18.20	1/4	L, U	T, Q, A, B	R	P	SHA, ULT
RBR54%18R40#&	18.40	1/4	L, U	T, Q, A, B	R	P	SHA, ULT
RBR54%18R70#&	18.70	1/4	L, U	T, Q, A, B	R	P	SHA, ULT
RBR54%18R90#&	18.90	1/4	L, U	T, Q, A, B	R	P	SHA, ULT
RBR54%19R10#&	19.10	1/4	L, U	T, Q, A, B	R	P	SHA, ULT
RBR54%19R30#&	19.30	1/4	L, U	T, Q, A, B	R	P	SHA, ULT
RBR54%19R60#&	19.60	1/4	L, U	T, Q, A, B	R	P	SHA, ULT
RBR54%19R80#&	19.80	1/4	L, U	T, Q, A, B	R	P	SHA, ULT
RBR54%20R00#&	20.00	1/4	L, U	T, Q, A, B	R	P	SHA, ULT
RBR54%20R30#&	20.30	1/4	L, U	T, Q, A, B	R	P	SHA, ULT
RBR54%20R50#&	20.50	1/4	L, U	T, Q, A, B	R	P	SHA, ULT
RBR54%20R80#&	20.80	1/4	L, U	T, Q, A, B	R	P	SHA, ULT
RBR54%21R00#&	21.00	1/4	L, U	T, Q, A, B	R	P	SHA, ULT
RBR54%21R30#&	21.30	1/4	L, U	T, Q, A, B	R	P	SHA, ULT
RBR54%21R50#&	21.50	1/4	L, U	T, Q, A, B	R	P	SHA, ULT
RBR54%21R80#&	21.80	1/4	L, U	T, Q, A, B	R	P	SHA, ULT

RBR54%22R10#&	22.10	1/4	L, U	T, Q, A, B	R	P	SHA, ULT
RBR54%22R30#&	22.30	1/4	L, U	T, Q, A, B	R	P	SHA, ULT
RBR54%22R60#&	22.60	1/4	L, U	T, Q, A, B	R	P	SHA, ULT
RBR54%22R90#&	22.90	1/4	L, U	T, Q, A, B	R	P	SHA, ULT
RBR54%23R20#&	23.20	1/4	L, U	T, Q, A, B	R	P	SHA, ULT
RBR54%23R40#&	23.40	1/4	L, U	T, Q, A, B	R	P	SHA, ULT
RBR54%23R70#&	23.70	1/4	L, U	T, Q, A, B	R	P	SHA, ULT
RBR54%24R00#&	24.00	1/4	L, U	T, Q, A, B	R	P	SHA, ULT
RBR54%24R30#&	24.30	1/4	L, U	T, Q, A, B	R	P	SHA, ULT
RBR54%24R60#&	24.60	1/4	L, U	T, Q, A, B	R	P	SHA, ULT
RBR54%24R90#&	24.90	1/4	L, U	T, Q, A, B	R	P	SHA, ULT
RBR54%25R20#&	25.20	1/4	L, U	T, Q, A, B	R	P	SHA, ULT
RBR54%25R50#&	25.50	1/4	L, U	T, Q, A, B	R	P	SHA, ULT
RBR54%25R80#&	25.80	1/4	L, U	T, Q, A, B	R	P	SHA, ULT
RBR54%26R10#&	26.10	1/4	L, U	T, Q, A, B	R	P	SHA, ULT
RBR54%26R40#&	26.40	1/4	L, U	T, Q, A, B	R	P	SHA, ULT
RBR54%26R70#&	26.70	1/4	L, U	T, Q, A, B	R	P	SHA, ULT
RBR54%27R10#&	27.10	1/4	L, U	T, Q, A, B	R	P	SHA, ULT
RBR54%27R40#&	27.40	1/4	L, U	T, Q, A, B	R	P	SHA, ULT
RBR54%27R70#&	27.70	1/4	L, U	T, Q, A, B	R	P	SHA, ULT
RBR54%28R00#&	28.00	1/4	L, U	T, Q, A, B	R	P	SHA, ULT
RBR54%28R40#&	28.40	1/4	L, U	T, Q, A, B	R	P	SHA, ULT
RBR54%28R70#&	28.70	1/4	L, U	T, Q, A, B	R	P	SHA, ULT
RBR54%29R10#&	29.10	1/4	L, U	T, Q, A, B	R	P	SHA, ULT
RBR54%29R40#&	29.40	1/4	L, U	T, Q, A, B	R	P	SHA, ULT
RBR54%29R80#&	29.80	1/4	L, U	T, Q, A, B	R	P	SHA, ULT
RBR54%30R10#&	30.10	1/4	L, U	T, Q, A, B	R	P	SHA, ULT
RBR54%30R50#&	30.50	1/4	L, U	T, Q, A, B	R	P	SHA, ULT
RBR54%30R90#&	30.90	1/4	L, U	T, Q, A, B	R	P	SHA, ULT
RBR54%31R20#&	31.20	1/4	L, U	T, Q, A, B	R	P	SHA, ULT
RBR54%31R60#&	31.60	1/4	L, U	T, Q, A, B	R	P	SHA, ULT
RBR54%32R00#&	32.00	1/4	L, U	T, Q, A, B	R	P	SHA, ULT
RBR54%32R40#&	32.40	1/4	L, U	T, Q, A, B	R	P	SHA, ULT
RBR54%32R80#&	32.80	1/4	L, U	T, Q, A, B	R	P	SHA, ULT
RBR54%33R20#&	33.20	1/4	L, U	T, Q, A, B	R	P	SHA, ULT
RBR54%33R60#&	33.60	1/4	L, U	T, Q, A, B	R	P	SHA, ULT
RBR54%34R00#&	34.00	1/4	L, U	T, Q, A, B	R	P	SHA, ULT
RBR54%34R40#&	34.40	1/4	L, U	T, Q, A, B	R	P	SHA, ULT
RBR54%34R80#&	34.80	1/4	L, U	T, Q, A, B	R	P	SHA, ULT
RBR54%35R20#&	35.20	1/4	L, U	T, Q, A, B	R	P	SHA, ULT
RBR54%35R70#&	35.70	1/4	L, U	T, Q, A, B	R	P	SHA, ULT
RBR54%36R10#&	36.10	1/4	L, U	T, Q, A, B	R	P	SHA, ULT
RBR54%36R50#&	36.50	1/4	L, U	T, Q, A, B	R	P	SHA, ULT
RBR54%37R00#&	37.00	1/4	L, U	T, Q, A, B	R	P	SHA, ULT
RBR54%37R40#&	37.40	1/4	L, U	T, Q, A, B	R	P	SHA, ULT
RBR54%37R90#&	37.90	1/4	L, U	T, Q, A, B	R	P	SHA, ULT
RBR54%38R30#&	38.30	1/4	L, U	T, Q, A, B	R	P	SHA, ULT

RBR54%38R80#&	38.80	1/4	L, U	T, Q, A, B	R	P	SHA, ULT
RBR54%39R20#&	39.20	1/4	L, U	T, Q, A, B	R	P	SHA, ULT
RBR54%39R70#&	39.70	1/4	L, U	T, Q, A, B	R	P	SHA, ULT
RBR54%40R20#&	40.20	1/4	L, U	T, Q, A, B	R	P	SHA, ULT
RBR54%40R70#&	40.70	1/4	L, U	T, Q, A, B	R	P	SHA, ULT
RBR54%41R20#&	41.20	1/4	L, U	T, Q, A, B	R	P	SHA, ULT
RBR54%41R70#&	41.70	1/4	L, U	T, Q, A, B	R	P	SHA, ULT
RBR54%42R20#&	42.20	1/4	L, U	T, Q, A, B	R	P	SHA, ULT
RBR54%42R70#&	42.70	1/4	L, U	T, Q, A, B	R	P	SHA, ULT
RBR54%43R20#&	43.20	1/4	L, U	T, Q, A, B	R	P	SHA, ULT
RBR54%43R70#&	43.70	1/4	L, U	T, Q, A, B	R	P	SHA, ULT
RBR54%44R20#&	44.20	1/4	L, U	T, Q, A, B	R	P	SHA, ULT
RBR54%44R80#&	44.80	1/4	L, U	T, Q, A, B	R	P	SHA, ULT
RBR54%45R30#&	45.30	1/4	L, U	T, Q, A, B	R	P	SHA, ULT
RBR54%45R90#&	45.90	1/4	L, U	T, Q, A, B	R	P	SHA, ULT
RBR54%46R40#&	46.40	1/4	L, U	T, Q, A, B	R	P	SHA, ULT
RBR54%47R00#&	47.00	1/4	L, U	T, Q, A, B	R	P	SHA, ULT
RBR54%47R50#&	47.50	1/4	L, U	T, Q, A, B	R	P	SHA, ULT
RBR54%48R10#&	48.10	1/4	L, U	T, Q, A, B	R	P	SHA, ULT
RBR54%48R70#&	48.70	1/4	L, U	T, Q, A, B	R	P	SHA, ULT
RBR54%49R30#&	49.30	1/4	L, U	T, Q, A, B	R	P	SHA, ULT
RBR54%49R90#&	49.90	1/4	L, U	T, Q, A, B	R	P	SHA, ULT
RBR54%50R50#&	50.50	1/4	L, U	T, Q, A, B	R	P	SHA, ULT
RBR54%51R10#&	51.10	1/4	L, U	T, Q, A, B	R	P	SHA, ULT
RBR54%51R70#&	51.70	1/4	L, U	T, Q, A, B	R	P	SHA, ULT
RBR54%52R30#&	52.30	1/4	L, U	T, Q, A, B	R	P	SHA, ULT
RBR54%53R00#&	53.00	1/4	L, U	T, Q, A, B	R	P	SHA, ULT
RBR54%53R60#&	53.60	1/4	L, U	T, Q, A, B	R	P	SHA, ULT
RBR54%54R20#&	54.20	1/4	L, U	T, Q, A, B	R	P	SHA, ULT
RBR54%54R90#&	54.90	1/4	L, U	T, Q, A, B	R	P	SHA, ULT
RBR54%55R60#&	55.60	1/4	L, U	T, Q, A, B	R	P	SHA, ULT
RBR54%56R20#&	56.20	1/4	L, U	T, Q, A, B	R	P	SHA, ULT
RBR54%56R90#&	56.90	1/4	L, U	T, Q, A, B	R	P	SHA, ULT
RBR54%57R60#&	57.60	1/4	L, U	T, Q, A, B	R	P	SHA, ULT
RBR54%58R30#&	58.30	1/4	L, U	T, Q, A, B	R	P	SHA, ULT
RBR54%59R00#&	59.00	1/4	L, U	T, Q, A, B	R	P	SHA, ULT
RBR54%59R70#&	59.70	1/4	L, U	T, Q, A, B	R	P	SHA, ULT
RBR54%60R40#&	60.40	1/4	L, U	T, Q, A, B	R	P	SHA, ULT
RBR54%61R20#&	61.20	1/4	L, U	T, Q, A, B	R	P	SHA, ULT
RBR54%61R90#&	61.90	1/4	L, U	T, Q, A, B	R	P	SHA, ULT
RBR54%62R60#&	62.60	1/4	L, U	T, Q, A, B	R	P	SHA, ULT
RBR54%63R40#&	63.40	1/4	L, U	T, Q, A, B	R	P	SHA, ULT
RBR54%64R20#&	64.20	1/4	L, U	T, Q, A, B	R	P	SHA, ULT
RBR54%64R90#&	64.90	1/4	L, U	T, Q, A, B	R	P	SHA, ULT
RBR54%65R70#&	65.70	1/4	L, U	T, Q, A, B	R	P	SHA, ULT
RBR54%66R50#&	66.50	1/4	L, U	T, Q, A, B	R	P	SHA, ULT
RBR54%67R30#&	67.30	1/4	L, U	T, Q, A, B	R	P	SHA, ULT

RBR54%68R10#&	68.10	1/4	L, U	T, Q, A, B	R	P	SHA, ULT
RBR54%69R00#&	69.00	1/4	L, U	T, Q, A, B	R	P	SHA, ULT
RBR54%69R80#&	69.80	1/4	L, U	T, Q, A, B	R	P	SHA, ULT
RBR54%70R60#&	70.60	1/4	L, U	T, Q, A, B	R	P	SHA, ULT
RBR54%71R50#&	71.50	1/4	L, U	T, Q, A, B	R	P	SHA, ULT
RBR54%72R30#&	72.30	1/4	L, U	T, Q, A, B	R	P	SHA, ULT
RBR54%73R20#&	73.20	1/4	L, U	T, Q, A, B	R	P	SHA, ULT
RBR54%74R10#&	74.10	1/4	L, U	T, Q, A, B	R	P	SHA, ULT
RBR54%75R00#&	75.00	1/4	L, U	T, Q, A, B	R	P	SHA, ULT
RBR54%75R90#&	75.90	1/4	L, U	T, Q, A, B	R	P	SHA, ULT
RBR54%76R80#&	76.80	1/4	L, U	T, Q, A, B	R	P	SHA, ULT
RBR54%77R70#&	77.70	1/4	L, U	T, Q, A, B	R	P	SHA, ULT
RBR54%78R70#&	78.70	1/4	L, U	T, Q, A, B	R	P	SHA, ULT
RBR54%79R60#&	79.60	1/4	L, U	T, Q, A, B	R	P	SHA, ULT
RBR54%80R60#&	80.60	1/4	L, U	T, Q, A, B	R	P	SHA, ULT
RBR54%81R60#&	81.60	1/4	L, U	T, Q, A, B	R	P	SHA, ULT
RBR54%82R50#&	82.50	1/4	L, U	T, Q, A, B	R	P	SHA, ULT
RBR54%83R50#&	83.50	1/4	L, U	T, Q, A, B	R	P	SHA, ULT
RBR54%84R50#&	84.50	1/4	L, U	T, Q, A, B	R	P	SHA, ULT
RBR54%85R60#&	85.60	1/4	L, U	T, Q, A, B	R	P	SHA, ULT
RBR54%86R60#&	86.60	1/4	L, U	T, Q, A, B	R	P	SHA, ULT
RBR54%87R60#&	87.60	1/4	L, U	T, Q, A, B	R	P	SHA, ULT
RBR54%88R70#&	88.70	1/4	L, U	T, Q, A, B	R	P	SHA, ULT
RBR54%89R80#&	89.80	1/4	L, U	T, Q, A, B	R	P	SHA, ULT
RBR54%90R90#&	90.90	1/4	L, U	T, Q, A, B	R	P	SHA, ULT
RBR54%92R00#&	92.00	1/4	L, U	T, Q, A, B	R	P	SHA, ULT
RBR54%93R10#&	93.10	1/4	L, U	T, Q, A, B	R	P	SHA, ULT
RBR54%94R20#&	94.20	1/4	L, U	T, Q, A, B	R	P	SHA, ULT
RBR54%95R30#&	95.30	1/4	L, U	T, Q, A, B	R	P	SHA, ULT
RBR54%96R50#&	96.50	1/4	L, U	T, Q, A, B	R	P	SHA, ULT
RBR54%97R60#&	97.60	1/4	L, U	T, Q, A, B	R	P	SHA, ULT
RBR54%98R80#&	98.80	1/4	L, U	T, Q, A, B	R	P	SHA, ULT
RBR54%100R0#&	100.0	1/4	L, U	T, Q, A, B	R	P	SHA, ULT
RBR54%101R0#&	101.0	1/4	L, U	T, Q, A, B	R	P	SHA, ULT
RBR54%102R0#&	102.0	1/4	L, U	T, Q, A, B	R	P	SHA, ULT
RBR54%104R0#&	104.0	1/4	L, U	T, Q, A, B	R	P	SHA, ULT
RBR54%105R0#&	105.0	1/4	L, U	T, Q, A, B	R	P	SHA, ULT
RBR54%106R0#&	106.0	1/4	L, U	T, Q, A, B	R	P	SHA, ULT
RBR54%107R0#&	107.0	1/4	L, U	T, Q, A, B	R	P	SHA, ULT
RBR54%109R0#&	109.0	1/4	L, U	T, Q, A, B	R	P	SHA, ULT
RBR54%110R0#&	110.0	1/4	L, U	T, Q, A, B	R	P	SHA, ULT
RBR54%111R0#&	111.0	1/4	L, U	T, Q, A, B	R	P	SHA, ULT
RBR54%113R0#&	113.0	1/4	L, U	T, Q, A, B	R	P	SHA, ULT
RBR54%114R0#&	114.0	1/4	L, U	T, Q, A, B	R	P	SHA, ULT
RBR54%115R0#&	115.0	1/4	L, U	T, Q, A, B	R	P	SHA, ULT
RBR54%117R0#&	117.0	1/4	L, U	T, Q, A, B	R	P	SHA, ULT
RBR54%118R0#&	118.0	1/4	L, U	T, Q, A, B	R	P	SHA, ULT

RBR54%120R0#&	120.0	1/4	L, U	T, Q, A, B	R	P	SHA, ULT
RBR54%121R0#&	121.0	1/4	L, U	T, Q, A, B	R	P	SHA, ULT
RBR54%123R0#&	123.0	1/4	L, U	T, Q, A, B	R	P	SHA, ULT
RBR54%124R0#&	124.0	1/4	L, U	T, Q, A, B	R	P	SHA, ULT
RBR54%126R0#&	126.0	1/4	L, U	T, Q, A, B	R	P	SHA, ULT
RBR54%127R0#&	127.0	1/4	L, U	T, Q, A, B	R	P	SHA, ULT
RBR54%129R0#&	129.0	1/4	L, U	T, Q, A, B	R	P	SHA, ULT
RBR54%130R0#&	130.0	1/4	L, U	T, Q, A, B	R	P	SHA, ULT
RBR54%132R0#&	132.0	1/4	L, U	T, Q, A, B	R	P	SHA, ULT
RBR54%133R0#&	133.0	1/4	L, U	T, Q, A, B	R	P	SHA, ULT
RBR54%135R0#&	135.0	1/4	L, U	T, Q, A, B	R	P	SHA, ULT
RBR54%137R0#&	137.0	1/4	L, U	T, Q, A, B	R	P	SHA, ULT
RBR54%138R0#&	138.0	1/4	L, U	T, Q, A, B	R	P	SHA, ULT
RBR54%140R0#&	140.0	1/4	L, U	T, Q, A, B	R	P	SHA, ULT
RBR54%142R0#&	142.0	1/4	L, U	T, Q, A, B	R	P	SHA, ULT
RBR54%143R0#&	143.0	1/4	L, U	T, Q, A, B	R	P	SHA, ULT
RBR54%145R0#&	145.0	1/4	L, U	T, Q, A, B	R	P	SHA, ULT
RBR54%147R0#&	147.0	1/4	L, U	T, Q, A, B	R	P	SHA, ULT
RBR54%149R0#&	149.0	1/4	L, U	T, Q, A, B	R	P	SHA, ULT
RBR54%150R0#&	150.0	1/4	L, U	T, Q, A, B	R	P	SHA, ULT
RBR54%152R0#&	152.0	1/4	L, U	T, Q, A, B	R	P	SHA, ULT
RBR54%154R0#&	154.0	1/4	L, U	T, Q, A, B	R	P	SHA, ULT
RBR54%156R0#&	156.0	1/4	L, U	T, Q, A, B	R	P	SHA, ULT
RBR54%158R0#&	158.0	1/4	L, U	T, Q, A, B	R	P	SHA, ULT
RBR54%160R0#&	160.0	1/4	L, U	T, Q, A, B	R	P	SHA, ULT
RBR54%162R0#&	162.0	1/4	L, U	T, Q, A, B	R	P	SHA, ULT
RBR54%164R0#&	164.0	1/4	L, U	T, Q, A, B	R	P	SHA, ULT
RBR54%165R0#&	165.0	1/4	L, U	T, Q, A, B	R	P	SHA, ULT
RBR54%167R0#&	167.0	1/4	L, U	T, Q, A, B	R	P	SHA, ULT
RBR54%169R0#&	169.0	1/4	L, U	T, Q, A, B	R	P	SHA, ULT
RBR54%172R0#&	172.0	1/4	L, U	T, Q, A, B	R	P	SHA, ULT
RBR54%174R0#&	174.0	1/4	L, U	T, Q, A, B	R	P	SHA, ULT
RBR54%176R0#&	176.0	1/4	L, U	T, Q, A, B	R	P	SHA, ULT
RBR54%178R0#&	178.0	1/4	L, U	T, Q, A, B	R	P	SHA, ULT
RBR54%180R0#&	180.0	1/4	L, U	T, Q, A, B	R	P	SHA, ULT
RBR54%182R0#&	182.0	1/4	L, U	T, Q, A, B	R	P	SHA, ULT
RBR54%184R0#&	184.0	1/4	L, U	T, Q, A, B	R	P	SHA, ULT
RBR54%187R0#&	187.0	1/4	L, U	T, Q, A, B	R	P	SHA, ULT
RBR54%189R0#&	189.0	1/4	L, U	T, Q, A, B	R	P	SHA, ULT
RBR54%191R0#&	191.0	1/4	L, U	T, Q, A, B	R	P	SHA, ULT
RBR54%193R0#&	193.0	1/4	L, U	T, Q, A, B	R	P	SHA, ULT
RBR54%196R0#&	196.0	1/4	L, U	T, Q, A, B	R	P	SHA, ULT
RBR54%198R0#&	198.0	1/4	L, U	T, Q, A, B	R	P	SHA, ULT
RBR54%200R0#&	200.0	1/4	L, U	T, Q, A, B	R	P	SHA, ULT
RBR54%203R0#&	203.0	1/4	L, U	T, Q, A, B	R	P	SHA, ULT
RBR54%205R0#&	205.0	1/4	L, U	T, Q, A, B	R	P	SHA, ULT
RBR54%208R0#&	208.0	1/4	L, U	T, Q, A, B	R	P	SHA, ULT

RBR54%210R0#&	210.0	1/4	L, U	T, Q, A, B	R	P	SHA, ULT
RBR54%213R0#&	213.0	1/4	L, U	T, Q, A, B	R	P	SHA, ULT
RBR54%215R0#&	215.0	1/4	L, U	T, Q, A, B	R	P	SHA, ULT
RBR54%218R0#&	218.0	1/4	L, U	T, Q, A, B	R	P	SHA, ULT
RBR54%221R0#&	221.0	1/4	L, U	T, Q, A, B	R	P	SHA, ULT
RBR54%223R0#&	223.0	1/4	L, U	T, Q, A, B	R	P	SHA, ULT
RBR54%226R0#&	226.0	1/4	L, U	T, Q, A, B	R	P	SHA, ULT
RBR54%229R0#&	229.0	1/4	L, U	T, Q, A, B	R	P	SHA, ULT
RBR54%232R0#&	232.0	1/4	L, U	T, Q, A, B	R	P	SHA, ULT
RBR54%234R0#&	234.0	1/4	L, U	T, Q, A, B	R	P	SHA, ULT
RBR54%237R0#&	237.0	1/4	L, U	T, Q, A, B	R	P	SHA, ULT
RBR54%240R0#&	240.0	1/4	L, U	T, Q, A, B	R	P	SHA, ULT
RBR54%243R0#&	243.0	1/4	L, U	T, Q, A, B	R	P	SHA, ULT
RBR54%246R0#&	246.0	1/4	L, U	T, Q, A, B	R	P	SHA, ULT
RBR54%249R0#&	249.0	1/4	L, U	T, Q, A, B	R	P	SHA, ULT
RBR54%252R0#&	252.0	1/4	L, U	T, Q, A, B	R	P	SHA, ULT
RBR54%255R0#&	255.0	1/4	L, U	T, Q, A, B	R	P	SHA, ULT
RBR54%258R0#&	258.0	1/4	L, U	T, Q, A, B	R	P	SHA, ULT
RBR54%261R0#&	261.0	1/4	L, U	T, Q, A, B	R	P	SHA, ULT
RBR54%264R0#&	264.0	1/4	L, U	T, Q, A, B	R	P	SHA, ULT
RBR54%267R0#&	267.0	1/4	L, U	T, Q, A, B	R	P	SHA, ULT
RBR54%271R0#&	271.0	1/4	L, U	T, Q, A, B	R	P	SHA, ULT
RBR54%274R0#&	274.0	1/4	L, U	T, Q, A, B	R	P	SHA, ULT
RBR54%277R0#&	277.0	1/4	L, U	T, Q, A, B	R	P	SHA, ULT
RBR54%280R0#&	280.0	1/4	L, U	T, Q, A, B	R	P	SHA, ULT
RBR54%284R0#&	284.0	1/4	L, U	T, Q, A, B	R	P	SHA, ULT
RBR54%287R0#&	287.0	1/4	L, U	T, Q, A, B	R	P	SHA, ULT
RBR54%291R0#&	291.0	1/4	L, U	T, Q, A, B	R	P	SHA, ULT
RBR54%294R0#&	294.0	1/4	L, U	T, Q, A, B	R	P	SHA, ULT
RBR54%298R0#&	298.0	1/4	L, U	T, Q, A, B	R	P	SHA, ULT
RBR54%301R0#&	301.0	1/4	L, U	T, Q, A, B	R	P	SHA, ULT
RBR54%305R0#&	305.0	1/4	L, U	T, Q, A, B	R	P	SHA, ULT
RBR54%309R0#&	309.0	1/4	L, U	T, Q, A, B	R	P	SHA, ULT
RBR54%312R0#&	312.0	1/4	L, U	T, Q, A, B	R	P	SHA, ULT
RBR54%316R0#&	316.0	1/4	L, U	T, Q, A, B	R	P	SHA, ULT
RBR54%320R0#&	320.0	1/4	L, U	T, Q, A, B	R	P	SHA, ULT
RBR54%324R0#&	324.0	1/4	L, U	T, Q, A, B	R	P	SHA, ULT
RBR54%328R0#&	328.0	1/4	L, U	T, Q, A, B	R	P	SHA, ULT
RBR54%332R0#&	332.0	1/4	L, U	T, Q, A, B	R	P	SHA, ULT
RBR54%336R0#&	336.0	1/4	L, U	T, Q, A, B	R	P	SHA, ULT
RBR54%340R0#&	340.0	1/4	L, U	T, Q, A, B	R	P	SHA, ULT
RBR54%344R0#&	344.0	1/4	L, U	T, Q, A, B	R	P	SHA, ULT
RBR54%348R0#&	348.0	1/4	L, U	T, Q, A, B	R	P	SHA, ULT
RBR54%352R0#&	352.0	1/4	L, U	T, Q, A, B	R	P	SHA, ULT
RBR54%357R0#&	357.0	1/4	L, U	T, Q, A, B	R	P	SHA, ULT
RBR54%361R0#&	361.0	1/4	L, U	T, Q, A, B	R	P	SHA, ULT
RBR54%365R0#&	365.0	1/4	L, U	T, Q, A, B	R	P	SHA, ULT

RBR54%370R0#&	370.0	1/4	L, U	T, Q, A, B	R	P	SHA, ULT
RBR54%374R0#&	374.0	1/4	L, U	T, Q, A, B	R	P	SHA, ULT
RBR54%379R0#&	379.0	1/4	L, U	T, Q, A, B	R	P	SHA, ULT
RBR54%383R0#&	383.0	1/4	L, U	T, Q, A, B	R	P	SHA, ULT
RBR54%388R0#&	388.0	1/4	L, U	T, Q, A, B	R	P	SHA, ULT
RBR54%392R0#&	392.0	1/4	L, U	T, Q, A, B	R	P	SHA, ULT
RBR54%397R0#&	397.0	1/4	L, U	T, Q, A, B	R	P	SHA, ULT
RBR54%402R0#&	402.0	1/4	L, U	T, Q, A, B	R	P	SHA, ULT
RBR54%407R0#&	407.0	1/4	L, U	T, Q, A, B	R	P	SHA, ULT
RBR54%412R0#&	412.0	1/4	L, U	T, Q, A, B	R	P	SHA, ULT
RBR54%417R0#&	417.0	1/4	L, U	T, Q, A, B	R	P	SHA, ULT
RBR54%422R0#&	422.0	1/4	L, U	T, Q, A, B	R	P	SHA, ULT
RBR54%427R0#&	427.0	1/4	L, U	T, Q, A, B	R	P	SHA, ULT
RBR54%432R0#&	432.0	1/4	L, U	T, Q, A, B	R	P	SHA, ULT
RBR54%437R0#&	437.0	1/4	L, U	T, Q, A, B	R	P	SHA, ULT
RBR54%442R0#&	442.0	1/4	L, U	T, Q, A, B	R	P	SHA, ULT
RBR54%448R0#&	448.0	1/4	L, U	T, Q, A, B	R	P	SHA, ULT
RBR54%453R0#&	453.0	1/4	L, U	T, Q, A, B	R	P	SHA, ULT
RBR54%459R0#&	459.0	1/4	L, U	T, Q, A, B	R	P	SHA, ULT
RBR54%464R0#&	464.0	1/4	L, U	T, Q, A, B	R	P	SHA, ULT
RBR54%470R0#&	470.0	1/4	L, U	T, Q, A, B	R	P	SHA, ULT
RBR54%475R0#&	475.0	1/4	L, U	T, Q, A, B	R	P	SHA, ULT
RBR54%481R0#&	481.0	1/4	L, U	T, Q, A, B	R	P	SHA, ULT
RBR54%487R0#&	487.0	1/4	L, U	T, Q, A, B	R	P	SHA, ULT
RBR54%493R0#&	493.0	1/4	L, U	T, Q, A, B	R	P	SHA, ULT
RBR54%499R0#&	499.0	1/4	L, U	T, Q, A, B	R	P	SHA, ULT
RBR54%505R0#&	505.0	1/4	L, U	T, Q, A, B	R	P	SHA, ULT
RBR54%511R0#&	511.0	1/4	L, U	T, Q, A, B	R	P	SHA, ULT
RBR54%517R0#&	517.0	1/4	L, U	T, Q, A, B	R	P	SHA, ULT
RBR54%523R0#&	523.0	1/4	L, U	T, Q, A, B	R	P	SHA, ULT
RBR54%530R0#&	530.0	1/4	L, U	T, Q, A, B	R	P	SHA, ULT
RBR54%536R0#&	536.0	1/4	L, U	T, Q, A, B	R	P	SHA, ULT
RBR54%542R0#&	542.0	1/4	L, U	T, Q, A, B	R	P	SHA, ULT
RBR54%549R0#&	549.0	1/4	L, U	T, Q, A, B	R	P	SHA, ULT
RBR54%556R0#&	556.0	1/4	L, U	T, Q, A, B	R	P	SHA, ULT
RBR54%562R0#&	562.0	1/4	L, U	T, Q, A, B	R	P	SHA, ULT
RBR54%569R0#&	569.0	1/4	L, U	T, Q, A, B	R	P	SHA, ULT
RBR54%576R0#&	576.0	1/4	L, U	T, Q, A, B	R	P	SHA, ULT
RBR54%583R0#&	583.0	1/4	L, U	T, Q, A, B	R	P	SHA, ULT
RBR54%590R0#&	590.0	1/4	L, U	T, Q, A, B	R	P	SHA, ULT
RBR54%597R0#&	597.0	1/4	L, U	T, Q, A, B	R	P	SHA, ULT
RBR54%604R0#&	604.0	1/4	L, U	T, Q, A, B	R	P	SHA, ULT
RBR54%612R0#&	612.0	1/4	L, U	T, Q, A, B	R	P	SHA, ULT
RBR54%619R0#&	619.0	1/4	L, U	T, Q, A, B	R	P	SHA, ULT
RBR54%626R0#&	626.0	1/4	L, U	T, Q, A, B	R	P	SHA, ULT
RBR54%634R0#&	634.0	1/4	L, U	T, Q, A, B	R	P	SHA, ULT
RBR54%642R0#&	642.0	1/4	L, U	T, Q, A, B	R	P	SHA, ULT

RBR54%649R0#&	649.0	1/4	L, U	T, Q, A, B	R	P	SHA, ULT
RBR54%657R0#&	657.0	1/4	L, U	T, Q, A, B	R	P	SHA, ULT
RBR54%665R0#&	665.0	1/4	L, U	T, Q, A, B	R	P	SHA, ULT
RBR54%673R0#&	673.0	1/4	L, U	T, Q, A, B	R	P	SHA, ULT
RBR54%681R0#&	681.0	1/4	L, U	T, Q, A, B	R	P	SHA, ULT
RBR54%690R0#&	690.0	1/4	L, U	T, Q, A, B	R	P	SHA, ULT
RBR54%698R0#&	698.0	1/4	L, U	T, Q, A, B	R	P	SHA, ULT
RBR54%706R0#&	706.0	1/4	L, U	T, Q, A, B	R	P	SHA, ULT
RBR54%715R0#&	715.0	1/4	L, U	T, Q, A, B	R	P	SHA, ULT
RBR54%723R0#&	723.0	1/4	L, U	T, Q, A, B	R	P	SHA, ULT
RBR54%732R0#&	732.0	1/4	L, U	T, Q, A, B	R	P	SHA, ULT
RBR54%741R0#&	741.0	1/4	L, U	T, Q, A, B	R	P	SHA, ULT
RBR54%750R0#&	750.0	1/4	L, U	T, Q, A, B	R	P	SHA, ULT
RBR54%759R0#&	759.0	1/4	L, U	T, Q, A, B	R	P	SHA, ULT
RBR54%768R0#&	768.0	1/4	L, U	T, Q, A, B	R	P	SHA, ULT
RBR54%777R0#&	777.0	1/4	L, U	T, Q, A, B	R	P	SHA, ULT
RBR54%787R0#&	787.0	1/4	L, U	T, Q, A, B	R	P	SHA, ULT
RBR54%796R0#&	796.0	1/4	L, U	T, Q, A, B	R	P	SHA, ULT
RBR54%806R0#&	806.0	1/4	L, U	T, Q, A, B	R	P	SHA, ULT
RBR54%816R0#&	816.0	1/4	L, U	T, Q, A, B	R	P	SHA, ULT
RBR54%825R0#&	825.0	1/4	L, U	T, Q, A, B	R	P	SHA, ULT
RBR54%835R0#&	835.0	1/4	L, U	T, Q, A, B	R	P	SHA, ULT
RBR54%845R0#&	845.0	1/4	L, U	T, Q, A, B	R	P	SHA, ULT
RBR54%856R0#&	856.0	1/4	L, U	T, Q, A, B	R	P	SHA, ULT
RBR54%866R0#&	866.0	1/4	L, U	T, Q, A, B	R	P	SHA, ULT
RBR54%876R0#&	876.0	1/4	L, U	T, Q, A, B	R	P	SHA, ULT
RBR54%887R0#&	887.0	1/4	L, U	T, Q, A, B	R	P	SHA, ULT
RBR54%898R0#&	898.0	1/4	L, U	T, Q, A, B	R	P	SHA, ULT
RBR54%909R0#&	909.0	1/4	L, U	T, Q, A, B	R	P	SHA, ULT
RBR54%920R0#&	920.0	1/4	L, U	T, Q, A, B	R	P	SHA, ULT
RBR54%931R0#&	931.0	1/4	L, U	T, Q, A, B	R	P	SHA, ULT
RBR54%942R0#&	942.0	1/4	L, U	T, Q, A, B	R	P	SHA, ULT
RBR54%953R0#&	953.0	1/4	L, U	T, Q, A, B	R	P	SHA, ULT
RBR54%965R0#&	965.0	1/4	L, U	T, Q, A, B	R	P	SHA, ULT
RBR54%976R0#&	976.0	1/4	L, U	T, Q, A, B	R	P	SHA, ULT
RBR54%988R0#&	988.0	1/4	L, U	T, Q, A, B	R	P	SHA, ULT
RBR54%10000#&	1,000	1/4	L, U	T, Q, A, B	R	P	SHA, ULT
RBR54%10100#&	1,010	1/4	L, U	T, Q, A, B	R	P	SHA, ULT
RBR54%10200#&	1,020	1/4	L, U	T, Q, A, B	R	P	SHA, ULT
RBR54%10400#&	1,040	1/4	L, U	T, Q, A, B	R	P	SHA, ULT
RBR54%10500#&	1,050	1/4	L, U	T, Q, A, B	R	P	SHA, ULT
RBR54%10600#&	1,060	1/4	L, U	T, Q, A, B	R	P	SHA, ULT
RBR54%10700#&	1,070	1/4	L, U	T, Q, A, B	R	P	SHA, ULT
RBR54%10900#&	1,090	1/4	L, U	T, Q, A, B	R	P	SHA, ULT
RBR54%11000#&	1,100	1/4	L, U	T, Q, A, B	R	P	SHA, ULT
RBR54%11100#&	1,110	1/4	L, U	T, Q, A, B	R	P	SHA, ULT
RBR54%11300#&	1,130	1/4	L, U	T, Q, A, B	R	P	SHA, ULT

RBR54%11400#&	1,140	1/4	L, U	T, Q, A, B	R	P	SHA, ULT
RBR54%11500#&	1,150	1/4	L, U	T, Q, A, B	R	P	SHA, ULT
RBR54%11700#&	1,170	1/4	L, U	T, Q, A, B	R	P	SHA, ULT
RBR54%11800#&	1,180	1/4	L, U	T, Q, A, B	R	P	SHA, ULT
RBR54%12000#&	1,200	1/4	L, U	T, Q, A, B	R	P	SHA, ULT
RBR54%12100#&	1,210	1/4	L, U	T, Q, A, B	R	P	SHA, ULT
RBR54%12300#&	1,230	1/4	L, U	T, Q, A, B	R	P	SHA, ULT
RBR54%12400#&	1,240	1/4	L, U	T, Q, A, B	R	P	SHA, ULT
RBR54%12600#&	1,260	1/4	L, U	T, Q, A, B	R	P	SHA, ULT
RBR54%12700#&	1,270	1/4	L, U	T, Q, A, B	R	P	SHA, ULT
RBR54%12900#&	1,290	1/4	L, U	T, Q, A, B	R	P	SHA, ULT
RBR54%13000#&	1,300	1/4	L, U	T, Q, A, B	R	P	SHA, ULT
RBR54%13200#&	1,320	1/4	L, U	T, Q, A, B	R	P	SHA, ULT
RBR54%13300#&	1,330	1/4	L, U	T, Q, A, B	R	P	SHA, ULT
RBR54%13500#&	1,350	1/4	L, U	T, Q, A, B	R	P	SHA, ULT
RBR54%13700#&	1,370	1/4	L, U	T, Q, A, B	R	P	SHA, ULT
RBR54%13800#&	1,380	1/4	L, U	T, Q, A, B	R	P	SHA, ULT
RBR54%14000#&	1,400	1/4	L, U	T, Q, A, B	R	P	SHA, ULT
RBR54%14200#&	1,420	1/4	L, U	T, Q, A, B	R	P	SHA, ULT
RBR54%14300#&	1,430	1/4	L, U	T, Q, A, B	R	P	SHA, ULT
RBR54%14500#&	1,450	1/4	L, U	T, Q, A, B	R	P	SHA, ULT
RBR54%14700#&	1,470	1/4	L, U	T, Q, A, B	R	P	SHA, ULT
RBR54%14900#&	1,490	1/4	L, U	T, Q, A, B	R	P	SHA, ULT
RBR54%15000#&	1,500	1/4	L, U	T, Q, A, B	R	P	SHA, ULT
RBR54%15200#&	1,520	1/4	L, U	T, Q, A, B	R	P	SHA, ULT
RBR54%15400#&	1,540	1/4	L, U	T, Q, A, B	R	P	SHA, ULT
RBR54%15600#&	1,560	1/4	L, U	T, Q, A, B	R	P	SHA, ULT
RBR54%15800#&	1,580	1/4	L, U	T, Q, A, B	R	P	SHA, ULT
RBR54%16000#&	1,600	1/4	L, U	T, Q, A, B	R	P	SHA, ULT
RBR54%16200#&	1,620	1/4	L, U	T, Q, A, B	R	P	SHA, ULT
RBR54%16400#&	1,640	1/4	L, U	T, Q, A, B	R	P	SHA, ULT
RBR54%16500#&	1,650	1/4	L, U	T, Q, A, B	R	P	SHA, ULT
RBR54%16700#&	1,670	1/4	L, U	T, Q, A, B	R	P	SHA, ULT
RBR54%16900#&	1,690	1/4	L, U	T, Q, A, B	R	P	SHA, ULT
RBR54%17200#&	1,720	1/4	L, U	T, Q, A, B	R	P	SHA, ULT
RBR54%17400#&	1,740	1/4	L, U	T, Q, A, B	R	P	SHA, ULT
RBR54%17600#&	1,760	1/4	L, U	T, Q, A, B	R	P	SHA, ULT
RBR54%17800#&	1,780	1/4	L, U	T, Q, A, B	R	P	SHA, ULT
RBR54%18000#&	1,800	1/4	L, U	T, Q, A, B	R	P	SHA, ULT
RBR54%18200#&	1,820	1/4	L, U	T, Q, A, B	R	P	SHA, ULT
RBR54%18400#&	1,840	1/4	L, U	T, Q, A, B	R	P	SHA, ULT
RBR54%18700#&	1,870	1/4	L, U	T, Q, A, B	R	P	SHA, ULT
RBR54%18900#&	1,890	1/4	L, U	T, Q, A, B	R	P	SHA, ULT
RBR54%19100#&	1,910	1/4	L, U	T, Q, A, B	R	P	SHA, ULT
RBR54%19300#&	1,930	1/4	L, U	T, Q, A, B	R	P	SHA, ULT
RBR54%19600#&	1,960	1/4	L, U	T, Q, A, B	R	P	SHA, ULT
RBR54%19800#&	1,980	1/4	L, U	T, Q, A, B	R	P	SHA, ULT

RBR54%20000#&	2,000	1/4	L, U	T, Q, A, B	R	P	SHA, ULT
RBR54%20300#&	2,030	1/4	L, U	T, Q, A, B	R	P	SHA, ULT
RBR54%20500#&	2,050	1/4	L, U	T, Q, A, B	R	P	SHA, ULT
RBR54%20800#&	2,080	1/4	L, U	T, Q, A, B	R	P	SHA, ULT
RBR54%21000#&	2,100	1/4	L, U	T, Q, A, B	R	P	SHA, ULT
RBR54%21300#&	2,130	1/4	L, U	T, Q, A, B	R	P	SHA, ULT
RBR54%21500#&	2,150	1/4	L, U	T, Q, A, B	R	P	SHA, ULT
RBR54%21800#&	2,180	1/4	L, U	T, Q, A, B	R	P	SHA, ULT
RBR54%22100#&	2,210	1/4	L, U	T, Q, A, B	R	P	SHA, ULT
RBR54%22300#&	2,230	1/4	L, U	T, Q, A, B	R	P	SHA, ULT
RBR54%22600#&	2,260	1/4	L, U	T, Q, A, B	R	P	SHA, ULT
RBR54%22900#&	2,290	1/4	L, U	T, Q, A, B	R	P	SHA, ULT
RBR54%23200#&	2,320	1/4	L, U	T, Q, A, B	R	P	SHA, ULT
RBR54%23400#&	2,340	1/4	L, U	T, Q, A, B	R	P	SHA, ULT
RBR54%23700#&	2,370	1/4	L, U	T, Q, A, B	R	P	SHA, ULT
RBR54%24000#&	2,400	1/4	L, U	T, Q, A, B	R	P	SHA, ULT
RBR54%24300#&	2,430	1/4	L, U	T, Q, A, B	R	P	SHA, ULT
RBR54%24600#&	2,460	1/4	L, U	T, Q, A, B	R	P	SHA, ULT
RBR54%24900#&	2,490	1/4	L, U	T, Q, A, B	R	P	SHA, ULT
RBR54%25200#&	2,520	1/4	L, U	T, Q, A, B	R	P	SHA, ULT
RBR54%25500#&	2,550	1/4	L, U	T, Q, A, B	R	P	SHA, ULT
RBR54%25800#&	2,580	1/4	L, U	T, Q, A, B	R	P	SHA, ULT
RBR54%26100#&	2,610	1/4	L, U	T, Q, A, B	R	P	SHA, ULT
RBR54%26400#&	2,640	1/4	L, U	T, Q, A, B	R	P	SHA, ULT
RBR54%26700#&	2,670	1/4	L, U	T, Q, A, B	R	P	SHA, ULT
RBR54%27100#&	2,710	1/4	L, U	T, Q, A, B	R	P	SHA, ULT
RBR54%27400#&	2,740	1/4	L, U	T, Q, A, B	R	P	SHA, ULT
RBR54%27700#&	2,770	1/4	L, U	T, Q, A, B	R	P	SHA, ULT
RBR54%28000#&	2,800	1/4	L, U	T, Q, A, B	R	P	SHA, ULT
RBR54%28400#&	2,840	1/4	L, U	T, Q, A, B	R	P	SHA, ULT
RBR54%28700#&	2,870	1/4	L, U	T, Q, A, B	R	P	SHA, ULT
RBR54%29100#&	2,910	1/4	L, U	T, Q, A, B	R	P	SHA, ULT
RBR54%29400#&	2,940	1/4	L, U	T, Q, A, B	R	P	SHA, ULT
RBR54%29800#&	2,980	1/4	L, U	T, Q, A, B	R	P	SHA, ULT
RBR54%30100#&	3,010	1/4	L, U	T, Q, A, B	R	P	SHA, ULT
RBR54%30500#&	3,050	1/4	L, U	T, Q, A, B	R	P	SHA, ULT
RBR54%30900#&	3,090	1/4	L, U	T, Q, A, B	R	P	SHA, ULT
RBR54%31200#&	3,120	1/4	L, U	T, Q, A, B	R	P	SHA, ULT
RBR54%31600#&	3,160	1/4	L, U	T, Q, A, B	R	P	SHA, ULT
RBR54%32000#&	3,200	1/4	L, U	T, Q, A, B	R	P	SHA, ULT
RBR54%32400#&	3,240	1/4	L, U	T, Q, A, B	R	P	SHA, ULT
RBR54%32800#&	3,280	1/4	L, U	T, Q, A, B	R	P	SHA, ULT
RBR54%33200#&	3,320	1/4	L, U	T, Q, A, B	R	P	SHA, ULT
RBR54%33600#&	3,360	1/4	L, U	T, Q, A, B	R	P	SHA, ULT
RBR54%34000#&	3,400	1/4	L, U	T, Q, A, B	R	P	SHA, ULT
RBR54%34400#&	3,440	1/4	L, U	T, Q, A, B	R	P	SHA, ULT
RBR54%34800#&	3,480	1/4	L, U	T, Q, A, B	R	P	SHA, ULT

RBR54%35200#&	3,520	1/4	L, U	T, Q, A, B	R	P	SHA, ULT
RBR54%35700#&	3,570	1/4	L, U	T, Q, A, B	R	P	SHA, ULT
RBR54%36100#&	3,610	1/4	L, U	T, Q, A, B	R	P	SHA, ULT
RBR54%36500#&	3,650	1/4	L, U	T, Q, A, B	R	P	SHA, ULT
RBR54%37000#&	3,700	1/4	L, U	T, Q, A, B	R	P	SHA, ULT
RBR54%37400#&	3,740	1/4	L, U	T, Q, A, B	R	P	SHA, ULT
RBR54%37900#&	3,790	1/4	L, U	T, Q, A, B	R	P	SHA, ULT
RBR54%38300#&	3,830	1/4	L, U	T, Q, A, B	R	P	SHA, ULT
RBR54%38800#&	3,880	1/4	L, U	T, Q, A, B	R	P	SHA, ULT
RBR54%39200#&	3,920	1/4	L, U	T, Q, A, B	R	P	SHA, ULT
RBR54%39700#&	3,970	1/4	L, U	T, Q, A, B	R	P	SHA, ULT
RBR54%40200#&	4,020	1/4	L, U	T, Q, A, B	R	P	SHA, ULT
RBR54%40700#&	4,070	1/4	L, U	T, Q, A, B	R	P	SHA, ULT
RBR54%41200#&	4,120	1/4	L, U	T, Q, A, B	R	P	SHA, ULT
RBR54%41700#&	4,170	1/4	L, U	T, Q, A, B	R	P	SHA, ULT
RBR54%42200#&	4,220	1/4	L, U	T, Q, A, B	R	P	SHA, ULT
RBR54%42700#&	4,270	1/4	L, U	T, Q, A, B	R	P	SHA, ULT
RBR54%43200#&	4,320	1/4	L, U	T, Q, A, B	R	P	SHA, ULT
RBR54%43700#&	4,370	1/4	L, U	T, Q, A, B	R	P	SHA, ULT
RBR54%44200#&	4,420	1/4	L, U	T, Q, A, B	R	P	SHA, ULT
RBR54%44800#&	4,480	1/4	L, U	T, Q, A, B	R	P	SHA, ULT
RBR54%45300#&	4,530	1/4	L, U	T, Q, A, B	R	P	SHA, ULT
RBR54%45900#&	4,590	1/4	L, U	T, Q, A, B	R	P	SHA, ULT
RBR54%46400#&	4,640	1/4	L, U	T, Q, A, B	R	P	SHA, ULT
RBR54%47000#&	4,700	1/4	L, U	T, Q, A, B	R	P	SHA, ULT
RBR54%47500#&	4,750	1/4	L, U	T, Q, A, B	R	P	SHA, ULT
RBR54%48100#&	4,810	1/4	L, U	T, Q, A, B	R	P	SHA, ULT
RBR54%48700#&	4,870	1/4	L, U	T, Q, A, B	R	P	SHA, ULT
RBR54%49300#&	4,930	1/4	L, U	T, Q, A, B	R	P	SHA, ULT
RBR54%49900#&	4,990	1/4	L, U	T, Q, A, B	R	P	SHA, ULT
RBR54%50500#&	5,050	1/4	L, U	T, Q, A, B	R	P	SHA, ULT
RBR54%51100#&	5,110	1/4	L, U	T, Q, A, B	R	P	SHA, ULT
RBR54%51700#&	5,170	1/4	L, U	T, Q, A, B	R	P	SHA, ULT
RBR54%52300#&	5,230	1/4	L, U	T, Q, A, B	R	P	SHA, ULT
RBR54%53000#&	5,300	1/4	L, U	T, Q, A, B	R	P	SHA, ULT
RBR54%53600#&	5,360	1/4	L, U	T, Q, A, B	R	P	SHA, ULT
RBR54%54200#&	5,420	1/4	L, U	T, Q, A, B	R	P	SHA, ULT
RBR54%54900#&	5,490	1/4	L, U	T, Q, A, B	R	P	SHA, ULT
RBR54%55600#&	5,560	1/4	L, U	T, Q, A, B	R	P	SHA, ULT
RBR54%56200#&	5,620	1/4	L, U	T, Q, A, B	R	P	SHA, ULT
RBR54%56900#&	5,690	1/4	L, U	T, Q, A, B	R	P	SHA, ULT
RBR54%57600#&	5,760	1/4	L, U	T, Q, A, B	R	P	SHA, ULT
RBR54%58300#&	5,830	1/4	L, U	T, Q, A, B	R	P	SHA, ULT
RBR54%59000#&	5,900	1/4	L, U	T, Q, A, B	R	P	SHA, ULT
RBR54%59700#&	5,970	1/4	L, U	T, Q, A, B	R	P	SHA, ULT
RBR54%60400#&	6,040	1/4	L, U	T, Q, A, B	R	P	SHA, ULT
RBR54%61200#&	6,120	1/4	L, U	T, Q, A, B	R	P	SHA, ULT

RBR54%61900#&	6,190	1/4	L, U	T, Q, A, B	R	P	SHA, ULT
RBR54%62600#&	6,260	1/4	L, U	T, Q, A, B	R	P	SHA, ULT
RBR54%63400#&	6,340	1/4	L, U	T, Q, A, B	R	P	SHA, ULT
RBR54%64200#&	6,420	1/4	L, U	T, Q, A, B	R	P	SHA, ULT
RBR54%64900#&	6,490	1/4	L, U	T, Q, A, B	R	P	SHA, ULT
RBR54%65700#&	6,570	1/4	L, U	T, Q, A, B	R	P	SHA, ULT
RBR54%66500#&	6,650	1/4	L, U	T, Q, A, B	R	P	SHA, ULT
RBR54%67300#&	6,730	1/4	L, U	T, Q, A, B	R	P	SHA, ULT
RBR54%68100#&	6,810	1/4	L, U	T, Q, A, B	R	P	SHA, ULT
RBR54%69000#&	6,900	1/4	L, U	T, Q, A, B	R	P	SHA, ULT
RBR54%69800#&	6,980	1/4	L, U	T, Q, A, B	R	P	SHA, ULT
RBR54%70600#&	7,060	1/4	L, U	T, Q, A, B	R	P	SHA, ULT
RBR54%71500#&	7,150	1/4	L, U	T, Q, A, B	R	P	SHA, ULT
RBR54%72300#&	7,230	1/4	L, U	T, Q, A, B	R	P	SHA, ULT
RBR54%73200#&	7,320	1/4	L, U	T, Q, A, B	R	P	SHA, ULT
RBR54%74100#&	7,410	1/4	L, U	T, Q, A, B	R	P	SHA, ULT
RBR54%75000#&	7,500	1/4	L, U	T, Q, A, B	R	P	SHA, ULT
RBR54%75900#&	7,590	1/4	L, U	T, Q, A, B	R	P	SHA, ULT
RBR54%76800#&	7,680	1/4	L, U	T, Q, A, B	R	P	SHA, ULT
RBR54%77700#&	7,770	1/4	L, U	T, Q, A, B	R	P	SHA, ULT
RBR54%78700#&	7,870	1/4	L, U	T, Q, A, B	R	P	SHA, ULT
RBR54%79600#&	7,960	1/4	L, U	T, Q, A, B	R	P	SHA, ULT
RBR54%80600#&	8,060	1/4	L, U	T, Q, A, B	R	P	SHA, ULT
RBR54%81600#&	8,160	1/4	L, U	T, Q, A, B	R	P	SHA, ULT
RBR54%82500#&	8,250	1/4	L, U	T, Q, A, B	R	P	SHA, ULT
RBR54%83500#&	8,350	1/4	L, U	T, Q, A, B	R	P	SHA, ULT
RBR54%84500#&	8,450	1/4	L, U	T, Q, A, B	R	P	SHA, ULT
RBR54%85600#&	8,560	1/4	L, U	T, Q, A, B	R	P	SHA, ULT
RBR54%86600#&	8,660	1/4	L, U	T, Q, A, B	R	P	SHA, ULT
RBR54%87600#&	8,760	1/4	L, U	T, Q, A, B	R	P	SHA, ULT
RBR54%88700#&	8,870	1/4	L, U	T, Q, A, B	R	P	SHA, ULT
RBR54%89800#&	8,980	1/4	L, U	T, Q, A, B	R	P	SHA, ULT
RBR54%90900#&	9,090	1/4	L, U	T, Q, A, B	R	P	SHA, ULT
RBR54%92000#&	9,190	1/4	L, U	T, Q, A, B	R	P	SHA, ULT
RBR54%93100#&	9,310	1/4	L, U	T, Q, A, B	R	P	SHA, ULT
RBR54%94200#&	9,420	1/4	L, U	T, Q, A, B	R	P	SHA, ULT
RBR54%95300#&	9,530	1/4	L, U	T, Q, A, B	R	P	SHA, ULT
RBR54%96500#&	9,650	1/4	L, U	T, Q, A, B	R	P	SHA, ULT
RBR54%97600#&	9,760	1/4	L, U	T, Q, A, B	R	P	SHA, ULT
RBR54%98800#&	9,880	1/4	L, U	T, Q, A, B	R	P	SHA, ULT
RBR54%10001#&	10,000	1/4	L, U	T, Q, A, B	R	P	SHA, ULT
RBR54%10101#&	10,100	1/4	L, U	T, Q, A, B	R	P	SHA, ULT
RBR54%10201#&	10,200	1/4	L, U	T, Q, A, B	R	P	SHA, ULT
RBR54%10401#&	10,400	1/4	L, U	T, Q, A, B	R	P	SHA, ULT
RBR54%10501#&	10,500	1/4	L, U	T, Q, A, B	R	P	SHA, ULT
RBR54%10601#&	10,600	1/4	L, U	T, Q, A, B	R	P	SHA, ULT
RBR54%10701#&	10,700	1/4	L, U	T, Q, A, B	R	P	SHA, ULT

RBR54%10901#&	10,900	1/4	L, U	T, Q, A, B	R	P	SHA, ULT
RBR54%11001#&	11,000	1/4	L, U	T, Q, A, B	R	P	SHA, ULT
RBR54%11101#&	11,100	1/4	L, U	T, Q, A, B	R	P	SHA, ULT
RBR54%11301#&	11,300	1/4	L, U	T, Q, A, B	R	P	SHA, ULT
RBR54%11401#&	11,400	1/4	L, U	T, Q, A, B	R	P	SHA, ULT
RBR54%11501#&	11,500	1/4	L, U	T, Q, A, B	R	P	SHA, ULT
RBR54%11701#&	11,700	1/4	L, U	T, Q, A, B	R	P	SHA, ULT
RBR54%11801#&	11,800	1/4	L, U	T, Q, A, B	R	P	SHA, ULT
RBR54%12001#&	12,000	1/4	L, U	T, Q, A, B	R	P	SHA, ULT
RBR54%12101#&	12,100	1/4	L, U	T, Q, A, B	R	P	SHA, ULT
RBR54%12301#&	12,300	1/4	L, U	T, Q, A, B	R	P	SHA, ULT
RBR54%12401#&	12,400	1/4	L, U	T, Q, A, B	R	P	SHA, ULT
RBR54%12601#&	12,600	1/4	L, U	T, Q, A, B	R	P	SHA, ULT
RBR54%12701#&	12,700	1/4	L, U	T, Q, A, B	R	P	SHA, ULT
RBR54%12901#&	12,900	1/4	L, U	T, Q, A, B	R	P	SHA, ULT
RBR54%13001#&	13,000	1/4	L, U	T, Q, A, B	R	P	SHA, ULT
RBR54%13201#&	13,200	1/4	L, U	T, Q, A, B	R	P	SHA, ULT
RBR54%13301#&	13,300	1/4	L, U	T, Q, A, B	R	P	SHA, ULT
RBR54%13501#&	13,500	1/4	L, U	T, Q, A, B	R	P	SHA, ULT
RBR54%13701#&	13,700	1/4	L, U	T, Q, A, B	R	P	SHA, ULT
RBR54%13801#&	13,800	1/4	L, U	T, Q, A, B	R	P	SHA, ULT
RBR54%14001#&	14,000	1/4	L, U	T, Q, A, B	R	P	SHA, ULT
RBR54%14201#&	14,200	1/4	L, U	T, Q, A, B	R	P	SHA, ULT
RBR54%14301#&	14,300	1/4	L, U	T, Q, A, B	R	P	SHA, ULT
RBR54%14501#&	14,500	1/4	L, U	T, Q, A, B	R	P	SHA, ULT
RBR54%14701#&	14,700	1/4	L, U	T, Q, A, B	R	P	SHA, ULT
RBR54%14901#&	14,900	1/4	L, U	T, Q, A, B	R	P	SHA, ULT
RBR54%15001#&	15,000	1/4	L, U	T, Q, A, B	R	P	SHA, ULT
RBR54%15201#&	15,200	1/4	L, U	T, Q, A, B	R	P	SHA, ULT
RBR54%15401#&	15,400	1/4	L, U	T, Q, A, B	R	P	SHA, ULT
RBR54%15601#&	15,600	1/4	L, U	T, Q, A, B	R	P	SHA, ULT
RBR54%15801#&	15,800	1/4	L, U	T, Q, A, B	R	P	SHA, ULT
RBR54%16001#&	16,000	1/4	L, U	T, Q, A, B	R	P	SHA, ULT
RBR54%16201#&	16,200	1/4	L, U	T, Q, A, B	R	P	SHA, ULT
RBR54%16401#&	16,400	1/4	L, U	T, Q, A, B	R	P	SHA, ULT
RBR54%16501#&	16,500	1/4	L, U	T, Q, A, B	R	P	SHA, ULT
RBR54%16701#&	16,700	1/4	L, U	T, Q, A, B	R	P	SHA, ULT
RBR54%16901#&	16,900	1/4	L, U	T, Q, A, B	R	P	SHA, ULT
RBR54%17201#&	17,200	1/4	L, U	T, Q, A, B	R	P	SHA, ULT
RBR54%17401#&	17,400	1/4	L, U	T, Q, A, B	R	P	SHA, ULT
RBR54%17601#&	17,600	1/4	L, U	T, Q, A, B	R	P	SHA, ULT
RBR54%17801#&	17,800	1/4	L, U	T, Q, A, B	R	P	SHA, ULT
RBR54%18001#&	18,000	1/4	L, U	T, Q, A, B	R	P	SHA, ULT
RBR54%18201#&	18,200	1/4	L, U	T, Q, A, B	R	P	SHA, ULT
RBR54%18401#&	18,400	1/4	L, U	T, Q, A, B	R	P	SHA, ULT
RBR54%18701#&	18,700	1/4	L, U	T, Q, A, B	R	P	SHA, ULT
RBR54%18901#&	18,900	1/4	L, U	T, Q, A, B	R	P	SHA, ULT

RBR54%19101#&	19,100	1/4	L, U	T, Q, A, B	R	P	SHA, ULT
RBR54%19301#&	19,300	1/4	L, U	T, Q, A, B	R	P	SHA, ULT
RBR54%19601#&	19,600	1/4	L, U	T, Q, A, B	R	P	SHA, ULT
RBR54%19801#&	19,800	1/4	L, U	T, Q, A, B	R	P	SHA, ULT
RBR54%20001#&	20,000	1/4	L, U	T, Q, A, B	R	P	SHA, ULT
RBR54%20301#&	20,300	1/4	L, U	T, Q, A, B	R	P	SHA, ULT
RBR54%20501#&	20,500	1/4	L, U	T, Q, A, B	R	P	SHA, ULT
RBR54%20801#&	20,800	1/4	L, U	T, Q, A, B	R	P	SHA, ULT
RBR54%21001#&	21,000	1/4	L, U	T, Q, A, B	R	P	SHA, ULT
RBR54%21301#&	21,300	1/4	L, U	T, Q, A, B	R	P	SHA, ULT
RBR54%21501#&	21,500	1/4	L, U	T, Q, A, B	R	P	SHA, ULT
RBR54%21801#&	21,800	1/4	L, U	T, Q, A, B	R	P	SHA, ULT
RBR54%22101#&	22,100	1/4	L, U	T, Q, A, B	R	P	SHA, ULT
RBR54%22301#&	22,300	1/4	L, U	T, Q, A, B	R	P	SHA, ULT
RBR54%22601#&	22,600	1/4	L, U	T, Q, A, B	R	P	SHA, ULT
RBR54%22901#&	22,900	1/4	L, U	T, Q, A, B	R	P	SHA, ULT
RBR54%23201#&	23,200	1/4	L, U	T, Q, A, B	R	P	SHA, ULT
RBR54%23401#&	23,400	1/4	L, U	T, Q, A, B	R	P	SHA, ULT
RBR54%23701#&	23,700	1/4	L, U	T, Q, A, B	R	P	SHA, ULT
RBR54%24001#&	24,000	1/4	L, U	T, Q, A, B	R	P	SHA, ULT
RBR54%24301#&	24,300	1/4	L, U	T, Q, A, B	R	P	SHA, ULT
RBR54%24601#&	24,600	1/4	L, U	T, Q, A, B	R	P	SHA, ULT
RBR54%24901#&	24,900	1/4	L, U	T, Q, A, B	R	P	SHA, ULT
RBR54%25201#&	25,200	1/4	L, U	T, Q, A, B	R	P	SHA, ULT
RBR54%25501#&	25,500	1/4	L, U	T, Q, A, B	R	P	SHA, ULT
RBR54%25801#&	25,800	1/4	L, U	T, Q, A, B	R	P	SHA, ULT
RBR54%26101#&	26,100	1/4	L, U	T, Q, A, B	R	P	SHA, ULT
RBR54%26401#&	26,400	1/4	L, U	T, Q, A, B	R	P	SHA, ULT
RBR54%26701#&	26,700	1/4	L, U	T, Q, A, B	R	P	SHA, ULT
RBR54%27101#&	27,100	1/4	L, U	T, Q, A, B	R	P	SHA, ULT
RBR54%27401#&	27,400	1/4	L, U	T, Q, A, B	R	P	SHA, ULT
RBR54%27701#&	27,700	1/4	L, U	T, Q, A, B	R	P	SHA, ULT
RBR54%28001#&	28,000	1/4	L, U	T, Q, A, B	R	P	SHA, ULT
RBR54%28401#&	28,400	1/4	L, U	T, Q, A, B	R	P	SHA, ULT
RBR54%28701#&	28,700	1/4	L, U	T, Q, A, B	R	P	SHA, ULT
RBR54%29101#&	29,100	1/4	L, U	T, Q, A, B	R	P	SHA, ULT
RBR54%29401#&	29,400	1/4	L, U	T, Q, A, B	R	P	SHA, ULT
RBR54%29801#&	29,800	1/4	L, U	T, Q, A, B	R	P	SHA, ULT
RBR54%30101#&	30,100	1/4	L, U	T, Q, A, B	R	P	SHA, ULT
RBR54%30501#&	30,500	1/4	L, U	T, Q, A, B	R	P	SHA, ULT
RBR54%30901#&	30,900	1/4	L, U	T, Q, A, B	R	P	SHA, ULT
RBR54%31201#&	31,200	1/4	L, U	T, Q, A, B	R	P	SHA, ULT
RBR54%31601#&	31,600	1/4	L, U	T, Q, A, B	R	P	SHA, ULT
RBR54%32001#&	32,000	1/4	L, U	T, Q, A, B	R	P	SHA, ULT
RBR54%32401#&	32,400	1/4	L, U	T, Q, A, B	R	P	SHA, ULT
RBR54%32801#&	32,800	1/4	L, U	T, Q, A, B	R	P	SHA, ULT
RBR54%33201#&	33,200	1/4	L, U	T, Q, A, B	R	P	SHA, ULT

RBR54%33601#&	33,600	1/4	L, U	T, Q, A, B	R	P	SHA, ULT
RBR54%34001#&	34,000	1/4	L, U	T, Q, A, B	R	P	SHA, ULT
RBR54%34401#&	34,400	1/4	L, U	T, Q, A, B	R	P	SHA, ULT
RBR54%34801#&	34,800	1/4	L, U	T, Q, A, B	R	P	SHA, ULT
RBR54%35201#&	35,200	1/4	L, U	T, Q, A, B	R	P	SHA, ULT
RBR54%35701#&	35,700	1/4	L, U	T, Q, A, B	R	P	SHA, ULT
RBR54%36101#&	36,100	1/4	L, U	T, Q, A, B	R	P	SHA, ULT
RBR54%36501#&	36,500	1/4	L, U	T, Q, A, B	R	P	SHA, ULT
RBR54%37001#&	37,000	1/4	L, U	T, Q, A, B	R	P	SHA, ULT
RBR54%37401#&	37,400	1/4	L, U	T, Q, A, B	R	P	SHA, ULT
RBR54%37901#&	37,900	1/4	L, U	T, Q, A, B	R	P	SHA, ULT
RBR54%38301#&	38,300	1/4	L, U	T, Q, A, B	R	P	SHA, ULT
RBR54%38801#&	38,800	1/4	L, U	T, Q, A, B	R	P	SHA, ULT
RBR54%39201#&	39,200	1/4	L, U	T, Q, A, B	R	P	SHA, ULT
RBR54%39701#&	39,700	1/4	L, U	T, Q, A, B	R	P	SHA, ULT
RBR54%40201#&	40,200	1/4	L, U	T, Q, A, B	R	P	SHA, ULT
RBR54%40701#&	40,700	1/4	L, U	T, Q, A, B	R	P	SHA, ULT
RBR54%41201#&	41,200	1/4	L, U	T, Q, A, B	R	P	SHA, ULT
RBR54%41701#&	41,700	1/4	L, U	T, Q, A, B	R	P	SHA, ULT
RBR54%42201#&	42,200	1/4	L, U	T, Q, A, B	R	P	SHA, ULT
RBR54%42701#&	42,700	1/4	L, U	T, Q, A, B	R	P	SHA, ULT
RBR54%43201#&	43,200	1/4	L, U	T, Q, A, B	R	P	SHA, ULT
RBR54%43701#&	43,700	1/4	L, U	T, Q, A, B	R	P	SHA, ULT
RBR54%44201#&	44,200	1/4	L, U	T, Q, A, B	R	P	SHA, ULT
RBR54%44801#&	44,800	1/4	L, U	T, Q, A, B	R	P	SHA, ULT
RBR54%45301#&	45,300	1/4	L, U	T, Q, A, B	R	P	SHA, ULT
RBR54%45901#&	45,900	1/4	L, U	T, Q, A, B	R	P	SHA, ULT
RBR54%46401#&	46,400	1/4	L, U	T, Q, A, B	R	P	SHA, ULT
RBR54%47001#&	47,000	1/4	L, U	T, Q, A, B	R	P	SHA, ULT
RBR54%47501#&	47,500	1/4	L, U	T, Q, A, B	R	P	SHA, ULT
RBR54%48101#&	48,100	1/4	L, U	T, Q, A, B	R	P	SHA, ULT
RBR54%48701#&	48,700	1/4	L, U	T, Q, A, B	R	P	SHA, ULT
RBR54%49301#&	49,300	1/4	L, U	T, Q, A, B	R	P	SHA, ULT
RBR54%49901#&	49,900	1/4	L, U	T, Q, A, B	R	P	SHA, ULT
RBR54%50501#&	50,500	1/4	L, U	T, Q, A, B	R	P	SHA, ULT
RBR54%51101#&	51,100	1/4	L, U	T, Q, A, B	R	P	SHA, ULT
RBR54%51701#&	51,700	1/4	L, U	T, Q, A, B	R	P	SHA, ULT
RBR54%52301#&	52,300	1/4	L, U	T, Q, A, B	R	P	SHA, ULT
RBR54%53001#&	53,000	1/4	L, U	T, Q, A, B	R	P	SHA, ULT
RBR54%53601#&	53,600	1/4	L, U	T, Q, A, B	R	P	SHA, ULT
RBR54%54201#&	54,200	1/4	L, U	T, Q, A, B	R	P	SHA, ULT
RBR54%54901#&	54,900	1/4	L, U	T, Q, A, B	R	P	SHA, ULT
RBR54%55601#&	55,600	1/4	L, U	T, Q, A, B	R	P	SHA, ULT
RBR54%56201#&	56,200	1/4	L, U	T, Q, A, B	R	P	SHA, ULT
RBR54%56901#&	56,900	1/4	L, U	T, Q, A, B	R	P	SHA, ULT
RBR54%57601#&	57,600	1/4	L, U	T, Q, A, B	R	P	SHA, ULT
RBR54%58301#&	58,300	1/4	L, U	T, Q, A, B	R	P	SHA, ULT

RBR54%59001#&	59,000	1/4	L, U	T, Q, A, B	R	P	SHA, ULT
RBR54%59701#&	59,700	1/4	L, U	T, Q, A, B	R	P	SHA, ULT
RBR54%60401#&	60,400	1/4	L, U	T, Q, A, B	R	P	SHA, ULT
RBR54%61201#&	61,200	1/4	L, U	T, Q, A, B	R	P	SHA, ULT
RBR54%61901#&	61,900	1/4	L, U	T, Q, A, B	R	P	SHA, ULT
RBR54%62601#&	62,600	1/4	L, U	T, Q, A, B	R	P	SHA, ULT
RBR54%63401#&	63,400	1/4	L, U	T, Q, A, B	R	P	SHA, ULT
RBR54%64201#&	64,200	1/4	L, U	T, Q, A, B	R	P	SHA, ULT
RBR54%64901#&	64,900	1/4	L, U	T, Q, A, B	R	P	SHA, ULT
RBR54%65701#&	65,700	1/4	L, U	T, Q, A, B	R	P	SHA, ULT
RBR54%66501#&	66,500	1/4	L, U	T, Q, A, B	R	P	SHA, ULT
RBR54%67301#&	67,300	1/4	L, U	T, Q, A, B	R	P	SHA, ULT
RBR54%68101#&	68,100	1/4	L, U	T, Q, A, B	R	P	SHA, ULT
RBR54%69001#&	69,000	1/4	L, U	T, Q, A, B	R	P	SHA, ULT
RBR54%69801#&	69,800	1/4	L, U	T, Q, A, B	R	P	SHA, ULT
RBR54%70601#&	70,600	1/4	L, U	T, Q, A, B	R	P	SHA, ULT
RBR54%71501#&	71,500	1/4	L, U	T, Q, A, B	R	P	SHA, ULT
RBR54%72301#&	72,300	1/4	L, U	T, Q, A, B	R	P	SHA, ULT
RBR54%73201#&	73,200	1/4	L, U	T, Q, A, B	R	P	SHA, ULT
RBR54%74101#&	74,100	1/4	L, U	T, Q, A, B	R	P	SHA, ULT
RBR54%75001#&	75,000	1/4	L, U	T, Q, A, B	R	P	SHA, ULT
RBR54%75901#&	75,900	1/4	L, U	T, Q, A, B	R	P	SHA, ULT
RBR54%76802#&	76,800	1/4	L, U	T, Q, A, B	R	P	SHA, ULT
RBR54%77702#&	77,700	1/4	L, U	T, Q, A, B	R	P	SHA, ULT
RBR54%78702#&	78,700	1/4	L, U	T, Q, A, B	R	P	SHA, ULT
RBR54%79602#&	79,600	1/4	L, U	T, Q, A, B	R	P	SHA, ULT
RBR54%80602#&	80,600	1/4	L, U	T, Q, A, B	R	P	SHA, ULT
RBR54%81602#&	81,600	1/4	L, U	T, Q, A, B	R	P	SHA, ULT
RBR54%82502#&	82,500	1/4	L, U	T, Q, A, B	R	P	SHA, ULT
RBR54%83502#&	83,500	1/4	L, U	T, Q, A, B	R	P	SHA, ULT
RBR54%84502#&	84,500	1/4	L, U	T, Q, A, B	R	P	SHA, ULT
RBR54%85602#&	85,600	1/4	L, U	T, Q, A, B	R	P	SHA, ULT
RBR54%86602#&	86,600	1/4	L, U	T, Q, A, B	R	P	SHA, ULT
RBR54%87602#&	87,600	1/4	L, U	T, Q, A, B	R	P	SHA, ULT
RBR54%88702#&	88,700	1/4	L, U	T, Q, A, B	R	P	SHA, ULT
RBR54%89802#&	89,800	1/4	L, U	T, Q, A, B	R	P	SHA, ULT
RBR54%90902#&	90,900	1/4	L, U	T, Q, A, B	R	P	SHA, ULT
RBR54%92002#&	92,000	1/4	L, U	T, Q, A, B	R	P	SHA, ULT
RBR54%93102#&	93,100	1/4	L, U	T, Q, A, B	R	P	SHA, ULT
RBR54%94202#&	94,200	1/4	L, U	T, Q, A, B	R	P	SHA, ULT
RBR54%95302#&	95,300	1/4	L, U	T, Q, A, B	R	P	SHA, ULT
RBR54%96502#&	96,500	1/4	L, U	T, Q, A, B	R	P	SHA, ULT
RBR54%97602#&	97,600	1/4	L, U	T, Q, A, B	R	P	SHA, ULT
RBR54%98802#&	98,800	1/4	L, U	T, Q, A, B	R	P	SHA, ULT
RBR54%10002#&	100,000	1/4	L, U	T, Q, A, B	R	P	SHA, ULT
RBR54%10102#&	101,000	1/4	L, U	T, Q, A, B	R	P	SHA, ULT
RBR54%10202#&	102,000	1/4	L, U	T, Q, A, B	R	P	SHA, ULT

RBR54%10402#&	104,000	1/4	L, U	T, Q, A, B	R	P	SHA, ULT
RBR54%10502#&	105,000	1/4	L, U	T, Q, A, B	R	P	SHA, ULT
RBR54%10602#&	106,000	1/4	L, U	T, Q, A, B	R	P	SHA, ULT
RBR54%10702#&	107,000	1/4	L, U	T, Q, A, B	R	P	SHA, ULT
RBR54%10902#&	109,000	1/4	L, U	T, Q, A, B	R	P	SHA, ULT
RBR54%11002#&	110,000	1/4	L, U	T, Q, A, B	R	P	SHA, ULT
RBR54%11102#&	111,000	1/4	L, U	T, Q, A, B	R	P	SHA, ULT
RBR54%11302#&	113,000	1/4	L, U	T, Q, A, B	R	P	SHA, ULT
RBR54%11402#&	114,000	1/4	L, U	T, Q, A, B	R	P	SHA, ULT
RBR54%11502#&	115,000	1/4	L, U	T, Q, A, B	R	P	SHA, ULT
RBR54%11702#&	117,000	1/4	L, U	T, Q, A, B	R	P	SHA, ULT
RBR54%11802#&	118,000	1/4	L, U	T, Q, A, B	R	P	SHA, ULT
RBR54%12002#&	120,000	1/4	L, U	T, Q, A, B	R	P	SHA, ULT
RBR54%12102#&	121,000	1/4	L, U	T, Q, A, B	R	P	SHA, ULT
RBR54%12302#&	123,000	1/4	L, U	T, Q, A, B	R	P	SHA, ULT
RBR54%12402#&	124,000	1/4	L, U	T, Q, A, B	R	P	SHA, ULT
RBR54%12602#&	126,000	1/4	L, U	T, Q, A, B	R	P	SHA, ULT
RBR54%12702#&	127,000	1/4	L, U	T, Q, A, B	R	P	SHA, ULT
RBR54%12902#&	129,000	1/4	L, U	T, Q, A, B	R	P	SHA, ULT
RBR54%13002#&	130,000	1/4	L, U	T, Q, A, B	R	P	SHA, ULT
RBR54%13202#&	132,000	1/4	L, U	T, Q, A, B	R	P	SHA, ULT
RBR54%13302#&	133,000	1/4	L, U	T, Q, A, B	R	P	SHA, ULT
RBR54%13502#&	135,000	1/4	L, U	T, Q, A, B	R	P	SHA, ULT
RBR54%13702#&	137,000	1/4	L, U	T, Q, A, B	R	P	SHA, ULT
RBR54%13802#&	138,000	1/4	L, U	T, Q, A, B	R	P	SHA, ULT
RBR54%14002#&	140,000	1/4	L, U	T, Q, A, B	R	P	SHA, ULT
RBR54%14202#&	142,000	1/4	L, U	T, Q, A, B	R	P	SHA, ULT
RBR54%14302#&	143,000	1/4	L, U	T, Q, A, B	R	P	SHA, ULT
RBR54%14502#&	145,000	1/4	L, U	T, Q, A, B	R	P	SHA, ULT
RBR54%14702#&	147,000	1/4	L, U	T, Q, A, B	R	P	SHA, ULT
RBR54%14902#&	149,000	1/4	L, U	T, Q, A, B	R	P	SHA, ULT
RBR54%15002#&	150,000	1/4	L, U	T, Q, A, B	R	P	SHA, ULT
RBR54%15202#&	152,000	1/4	L, U	T, Q, A, B	R	P	SHA, ULT
RBR54%15402#&	154,000	1/4	L, U	T, Q, A, B	R	P	SHA, ULT
RBR54%15602#&	156,000	1/4	L, U	T, Q, A, B	R	P	SHA, ULT
RBR54%15802#&	158,000	1/4	L, U	T, Q, A, B	R	P	SHA, ULT
RBR54%16002#&	160,000	1/4	L, U	T, Q, A, B	R	P	SHA, ULT
RBR54%16202#&	162,000	1/4	L, U	T, Q, A, B	R	P	SHA, ULT
RBR54%16402#&	164,000	1/4	L, U	T, Q, A, B	R	P	SHA, ULT
RBR54%16502#&	165,000	1/4	L, U	T, Q, A, B	R	P	SHA, ULT
RBR54%16702#&	167,000	1/4	L, U	T, Q, A, B	R	P	SHA, ULT
RBR54%16902#&	169,000	1/4	L, U	T, Q, A, B	R	P	SHA, ULT
RBR54%17202#&	172,000	1/4	L, U	T, Q, A, B	R	P	SHA, ULT
RBR54%17402#&	174,000	1/4	L, U	T, Q, A, B	R	P	SHA, ULT
RBR54%17602#&	176,000	1/4	L, U	T, Q, A, B	R	P	SHA, ULT
RBR54%17802#&	178,000	1/4	L, U	T, Q, A, B	R	P	SHA, ULT
RBR54%18002#&	180,000	1/4	L, U	T, Q, A, B	R	P	SHA, ULT

RBR54%18202#&	182,000	1/4	L, U	T, Q, A, B	R	P	SHA, ULT
RBR54%18402#&	184,000	1/4	L, U	T, Q, A, B	R	P	SHA, ULT
RBR54%18702#&	187,000	1/4	L, U	T, Q, A, B	R	P	SHA, ULT
RBR54%18902#&	189,000	1/4	L, U	T, Q, A, B	R	P	SHA, ULT
RBR54%19102#&	191,000	1/4	L, U	T, Q, A, B	R	P	SHA, ULT
RBR54%19302#&	193,000	1/4	L, U	T, Q, A, B	R	P	SHA, ULT
RBR54%19602#&	196,000	1/4	L, U	T, Q, A, B	R	P	SHA, ULT
RBR54%19802#&	198,000	1/4	L, U	T, Q, A, B	R	P	SHA, ULT
RBR54%20002#&	200,000	1/4	L, U	T, Q, A, B	R	P	SHA, ULT
RBR54%20302#&	203,000	1/4	L, U	T, Q, A, B	R	P	SHA, ULT
RBR54%20502#&	205,000	1/4	L, U	T, Q, A, B	R	P	SHA, ULT
RBR54%20802#&	208,000	1/4	L, U	T, Q, A, B	R	P	SHA, ULT
RBR54%21002#&	210,000	1/4	L, U	T, Q, A, B	R	P	SHA, ULT
RBR54%21302#&	213,000	1/4	L, U	T, Q, A, B	R	P	SHA, ULT
RBR54%21502#&	215,000	1/4	L, U	T, Q, A, B	R	P	SHA, ULT
RBR54%21802#&	218,000	1/4	L, U	T, Q, A, B	R	P	SHA, ULT
RBR54%22102#&	221,000	1/4	L, U	T, Q, A, B	R	P	SHA, ULT
RBR54%22302#&	223,000	1/4	L, U	T, Q, A, B	R	P	SHA, ULT
RBR54%22602#&	226,000	1/4	L, U	T, Q, A, B	R	P	SHA, ULT
RBR54%22902#&	229,000	1/4	L, U	T, Q, A, B	R	P	SHA, ULT
RBR54%23202#&	232,000	1/4	L, U	T, Q, A, B	R	P	SHA, ULT
RBR54%23402#&	234,000	1/4	L, U	T, Q, A, B	R	P	SHA, ULT
RBR54%23702#&	237,000	1/4	L, U	T, Q, A, B	R	P	SHA, ULT
RBR54%24002#&	240,000	1/4	L, U	T, Q, A, B	R	P	SHA, ULT
RBR54%24302#&	243,000	1/4	L, U	T, Q, A, B	R	P	SHA, ULT
RBR54%24602#&	246,000	1/4	L, U	T, Q, A, B	R	P	SHA, ULT
RBR54%24902#&	249,000	1/4	L, U	T, Q, A, B	R	P	SHA, ULT
RBR54%25202#&	252,000	1/4	L, U	T, Q, A, B	R	P	SHA, ULT
RBR54%25502#&	255,000	1/4	L, U	T, Q, A, B	R	P	SHA, ULT
RBR54%25802#&	258,000	1/4	L, U	T, Q, A, B	R	P	SHA, ULT
RBR54%26102#&	261,000	1/4	L, U	T, Q, A, B	R	P	SHA, ULT
RBR54%26402#&	264,000	1/4	L, U	T, Q, A, B	R	P	SHA, ULT
RBR54%26702#&	267,000	1/4	L, U	T, Q, A, B	R	P	SHA, ULT
RBR54%27102#&	271,000	1/4	L, U	T, Q, A, B	R	P	SHA, ULT
RBR54%27402#&	274,000	1/4	L, U	T, Q, A, B	R	P	SHA, ULT
RBR54%27702#&	277,000	1/4	L, U	T, Q, A, B	R	P	SHA, ULT
RBR54%28002#&	280,000	1/4	L, U	T, Q, A, B	R	P	SHA, ULT
RBR54%28402#&	284,000	1/4	L, U	T, Q, A, B	R	P	SHA, ULT
RBR54%28702#&	287,000	1/4	L, U	T, Q, A, B	R	P	SHA, ULT
RBR54%29102#&	291,000	1/4	L, U	T, Q, A, B	R	P	SHA, ULT
RBR54%29402#&	294,000	1/4	L, U	T, Q, A, B	R	P	SHA, ULT
RBR54%29802#&	298,000	1/4	L, U	T, Q, A, B	R	P	SHA, ULT
RBR54%30102#&	301,000	1/4	L, U	T, Q, A, B	R	P	SHA, ULT
RBR54%30502#&	305,000	1/4	L, U	T, Q, A, B	R	P	SHA, ULT
RBR54%30902#&	309,000	1/4	L, U	T, Q, A, B	R	P	SHA, ULT
RBR54%31202#&	312,000	1/4	L, U	T, Q, A, B	R	P	SHA, ULT
RBR54%31602#&	316,000	1/4	L, U	T, Q, A, B	R	P	SHA, ULT

RBR54%32002#&	320,000	1/4	L, U	T, Q, A, B	R	P	SHA, ULT
RBR54%32402#&	324,000	1/4	L, U	T, Q, A, B	R	P	SHA, ULT
RBR54%32802#&	328,000	1/4	L, U	T, Q, A, B	R	P	SHA, ULT
RBR54%33202#&	332,000	1/4	L, U	T, Q, A, B	R	P	SHA, ULT
RBR54%33602#&	336,000	1/4	L, U	T, Q, A, B	R	P	SHA, ULT
RBR54%34002#&	340,000	1/4	L, U	T, Q, A, B	R	P	SHA, ULT
RBR54%34402#&	344,000	1/4	L, U	T, Q, A, B	R	P	SHA, ULT
RBR54%34802#&	348,000	1/4	L, U	T, Q, A, B	R	P	SHA, ULT
RBR54%35202#&	352,000	1/4	L, U	T, Q, A, B	R	P	SHA, ULT
RBR54%35702#&	357,000	1/4	L, U	T, Q, A, B	R	P	SHA, ULT
RBR54%36102#&	361,000	1/4	L, U	T, Q, A, B	R	P	SHA, ULT
RBR54%36502#&	365,000	1/4	L, U	T, Q, A, B	R	P	SHA, ULT
RBR54%37002#&	370,000	1/4	L, U	T, Q, A, B	R	P	SHA, ULT
RBR54%37402#&	374,000	1/4	L, U	T, Q, A, B	R	P	SHA, ULT
RBR54%37902#&	379,000	1/4	L, U	T, Q, A, B	R	P	SHA, ULT
RBR54%38302#&	383,000	1/4	L, U	T, Q, A, B	R	P	SHA, ULT
RBR54%38802#&	388,000	1/4	L, U	T, Q, A, B	R	P	SHA, ULT
RBR54%39202#&	392,000	1/4	L, U	T, Q, A, B	R	P	SHA, ULT
RBR54%39702#&	397,000	1/4	L, U	T, Q, A, B	R	P	SHA, ULT
RBR54%40202#&	402,000	1/4	L, U	T, Q, A, B	R	P	SHA, ULT
RBR54%40702#&	407,000	1/4	L, U	T, Q, A, B	R	P	SHA, ULT
RBR54%41202#&	412,000	1/4	L, U	T, Q, A, B	R	P	SHA, ULT
RBR54%41702#&	417,000	1/4	L, U	T, Q, A, B	R	P	SHA, ULT
RBR54%42202#&	422,000	1/4	L, U	T, Q, A, B	R	P	SHA, ULT
RBR54%42702#&	427,000	1/4	L, U	T, Q, A, B	R	P	SHA, ULT
RBR54%43202#&	432,000	1/4	L, U	T, Q, A, B	R	P	SHA, ULT
RBR54%43702#&	437,000	1/4	L, U	T, Q, A, B	R	P	SHA, ULT
RBR54%44202#&	442,000	1/4	L, U	T, Q, A, B	R	P	SHA, ULT
RBR54%44802#&	448,000	1/4	L, U	T, Q, A, B	R	P	SHA, ULT
RBR54%45302#&	453,000	1/4	L, U	T, Q, A, B	R	P	SHA, ULT
RBR54%45902#&	459,000	1/4	L, U	T, Q, A, B	R	P	SHA, ULT
RBR54%46402#&	464,000	1/4	L, U	T, Q, A, B	R	P	SHA, ULT
RBR54%47002#&	470,000	1/4	L, U	T, Q, A, B	R	P	SHA, ULT
RBR54%47502#&	475,000	1/4	L, U	T, Q, A, B	R	P	SHA, ULT
RBR54%48102#&	481,000	1/4	L, U	T, Q, A, B	R	P	SHA, ULT
RBR54%48702#&	487,000	1/4	L, U	T, Q, A, B	R	P	SHA, ULT
RBR54%49302#&	493,000	1/4	L, U	T, Q, A, B	R	P	SHA, ULT
RBR54%49902#&	499,000	1/4	L, U	T, Q, A, B	R	P	SHA, ULT
RBR54%50502#&	505,000	1/4	L, U	T, Q, A, B	R	P	SHA, ULT
RBR54%51102#&	511,000	1/4	L, U	T, Q, A, B	R	P	SHA, ULT
RBR54%51702#&	517,000	1/4	L, U	T, Q, A, B	R	P	SHA, ULT
RBR54%52302#&	523,000	1/4	L, U	T, Q, A, B	R	P	SHA, ULT
RBR54%53002#&	530,000	1/4	L, U	T, Q, A, B	R	P	SHA, ULT
RBR54%53602#&	536,000	1/4	L, U	T, Q, A, B	R	P	SHA, ULT
RBR54%54202#&	542,000	1/4	L, U	T, Q, A, B	R	P	SHA, ULT
RBR54%54902#&	549,000	1/4	L, U	T, Q, A, B	R	P	SHA, ULT
RBR54%55602#&	556,000	1/4	L, U	T, Q, A, B	R	P	SHA, ULT

RBR54%56202#&	562,000	1/4	L, U	T, Q, A, B	R	P	SHA, ULT

RBR54 RESISTORS DECADE BREAKDOWN

Click on the link below to see the associated parts selection listing:

Resistance Range
4.990 Ohms through 9.800 Ohms
10.00 Ohms through 98.80 Ohms
100.0 Ohms through 988.0 Ohms
1,000 Ohms through 9,880 Ohms
10,000 Ohms through 98,800 Ohms
100,000 Ohms through 562,000 Ohms

RBR54 Wirewound Resistors: 4.990 Ohms through 9.880 Ohms

	Resistance	Power	Terminal	Resistance	Level 1	Level 2	
Part Number	Value (Ohms)	Rating (W)	Characteristic (#)	Tolerance (%)	(FRL)(&)	(FRL)(&)	Manufacturer
RBR54#4R990%&	4.990	1/4	L, U	T, Q, A, B	R	P	SHA
RBR54#5R050%&	5.050	1/4	L, U	T, Q, A, B	R	P	SHA
RBR54#5R110%&	5.110	1/4	L, U	T, Q, A, B	R	P	SHA
RBR54#5R170%&	5.170	1/4	L, U	T, Q, A, B	R	P	SHA
RBR54#5R230%&	5.230	1/4	L, U	T, Q, A, B	R	P	SHA
RBR54#5R300%&	5.300	1/4	L, U	T, Q, A, B	R	P	SHA
RBR54#5R360%&	5.360	1/4	L, U	T, Q, A, B	R	P	SHA
RBR54#5R420%&	5.420	1/4	L, U	T, Q, A, B	R	P	SHA
RBR54#5R490%&	5.490	1/4	L, U	T, Q, A, B	R	P	SHA
RBR54#5R560%&	5.560	1/4	L, U	T, Q, A, B	R	P	SHA
RBR54#5R620%&	5.620	1/4	L, U	T, Q, A, B	R	P	SHA
RBR54#5R690%&	5.690	1/4	L, U	T, Q, A, B	R	P	SHA
RBR54#5R760%&	5.760	1/4	L, U	T, Q, A, B	R	P	SHA
RBR54#5R830%&	5.830	1/4	L, U	T, Q, A, B	R	P	SHA
	Resistance	Power	Terminal	Resistance	Level 1	Level 2	
Part Number	Value (Ohms)	Rating (W)	Characteristic (#)	Tolerance (%)	(FRL)(&)	(FRL)(&)	Manufacturer
RBR54#5R900%&	5.900	1/4	L, U	T, Q, A, B	R	P	SHA
RBR54#5R970%&	5.970	1/4	L, U	T, Q, A, B	R	P	SHA
RBR54#6R040%&	6.040	1/4	L, U	T, Q, A, B	R	P	SHA
RBR54#6R120%&	6.120	1/4	L, U	T, Q, A, B	R	P	SHA
RBR54#6R190%&	6.190	1/4	L, U	T, Q, A, B	R	P	SHA
RBR54#6R260%&	6.260	1/4	L, U	T, Q, A, B	R	P	SHA
RBR54#6R340%&	6.340	1/4	L, U	T, Q, A, B	R	P	SHA
RBR54#6R420%&	6.420	1/4	L, U	T, Q, A, B	R	P	SHA
RBR54#6R490%&	6.490	1/4	L, U	T, Q, A, B	R	P	SHA
RBR54#6R570%&	6.570	1/4	L, U	T, Q, A, B	R	P	SHA
RBR54#6R650%&	6.650	1/4	L, U	T, Q, A, B	R	P	SHA

RBR54#6R730%&	6.730	1/4	L, U	T, Q, A, B	R	P	SHA
RBR54#6R810%&	6.810	1/4	L, U	T, Q, A, B	R	P	SHA
RBR54#6R900%&	6.900	1/4	L, U	T, Q, A, B	R	P	SHA
	Resistance	Power	Terminal	Resistance	Level 1	Level 2	
Part Number	Value (Ohms)	Rating (W)	Characteristic (#)	Tolerance (%)	(FRL)(&)	(FRL)(&)	Manufacturer
RBR54#6R980%&	6.980	1/4	L, U	T, Q, A, B	R	P	SHA
RBR54#7R060%&	7.060	1/4	L, U	T, Q, A, B	R	P	SHA
RBR54#7R150%&	7.150	1/4	L, U	T, Q, A, B	R	P	SHA
RBR54#7R230%&	7.230	1/4	L, U	T, Q, A, B	R	P	SHA
RBR54#7R320%&	7.320	1/4	L, U	T, Q, A, B	R	P	SHA
RBR54#7R410%&	7.410	1/4	L, U	T, Q, A, B	R	P	SHA
RBR54#7R500%&	7.500	1/4	L, U	T, Q, A, B	R	P	SHA
RBR54#7R590%&	7.590	1/4	L, U	T, Q, A, B	R	P	SHA
RBR54#7R680%&	7.680	1/4	L, U	T, Q, A, B	R	P	SHA
RBR54#7R770%&	7.770	1/4	L, U	T, Q, A, B	R	P	SHA
RBR54#7R870%&	7.870	1/4	L, U	T, Q, A, B	R	P	SHA
RBR54#7R960%&	7.960	1/4	L, U	T, Q, A, B	R	P	SHA
RBR54#8R060%&	8.060	1/4	L, U	T, Q, A, B	R	P	SHA
RBR54#8R160%&	8.160	1/4	L, U	T, Q, A, B	R	P	SHA
	Resistance	Power	Terminal	Resistance	Level 1	Level 2	
Part Number	Value (Ohms)	Rating (W)	Characteristic (#)	Tolerance (%)	(FRL)(&)	(FRL)(&)	Manufacturer
RBR54#8R250%&	8.250	1/4	L, U	T, Q, A, B	R	P	SHA
RBR54#8R350%&	8.350	1/4	L, U	T, Q, A, B	R	P	SHA
RBR54#8R450%&	8.450	1/4	L, U	T, Q, A, B	R	P	SHA
RBR54#8R560%&	8.560	1/4	L, U	T, Q, A, B	R	P	SHA
RBR54#8R660%&	8.660	1/4	L, U	T, Q, A, B	R	P	SHA
RBR54#8R760%&	8.760	1/4	L, U	T, Q, A, B	R	P	SHA
RBR54#8R870%&	8.870	1/4	L, U	T, Q, A, B	R	P	SHA
RBR54#8R980%&	8.980	1/4	L, U	T, Q, A, B	R	P	SHA
RBR54#9R090%&	9.080	1/4	L, U	T, Q, A, B	R	P	SHA
RBR54#9R200%&	9.200	1/4	L, U	T, Q, A, B	R	P	SHA
RBR54#9R310%&	9.310	1/4	L, U	T, Q, A, B	R	P	SHA
RBR54#9R420%&	9.420	1/4	L, U	T, Q, A, B	R	P	SHA
RBR54#9R530%&	9.530	1/4	L, U	T, Q, A, B	R	P	SHA
RBR54#9R650%&	9.650	1/4	L, U	T, Q, A, B	R	P	SHA
	Resistance	Power	Terminal	Resistance	Level 1	Level 2	
Part Number	Value (Ohms)	Rating (W)	Characteristic (#)	Tolerance (%)	(FRL)(&)	(FRL)(&)	Manufacturer
RBR54#9R760%&	9.760	1/4	L, U	T, Q, A, B	R	P	SHA
RBR54#9R880%&	9.880	1/4	L, U	T, Q, A, B	R	P	SHA

RBR54 Wirewound Resistors: 10.00 Ohms through 98.80 Ohms

	Resistance	Power	Terminal	Resistance	Level 1	Level 2	
Part Number	Value (Ohms)	Rating (W)	Characteristic (#)	Tolerance (%)	(FRL)(&)	(FRL)(&)	Manufacturer
RBR54#10R00%&	10.00	1/4	L, U	T, Q, A, B	R	P	SHA

RBR54#10R10%&	10.10	1/4	L, U	T, Q, A, B	R	P	SHA
RBR54#10R20%&	10.20	1/4	L, U	T, Q, A, B	R	P	SHA
RBR54#10R40%&	10.40	1/4	L, U	T, Q, A, B	R	P	SHA
RBR54#10R50%&	10.50	1/4	L, U	T, Q, A, B	R	P	SHA
RBR54#10R60%&	10.60	1/4	L, U	T, Q, A, B	R	P	SHA
RBR54#10R70%&	10.70	1/4	L, U	T, Q, A, B	R	P	SHA
RBR54#10R90%&	10.90	1/4	L, U	T, Q, A, B	R	P	SHA
RBR54#11R00%&	11.00	1/4	L, U	T, Q, A, B	R	P	SHA
RBR54#11R10%&	11.10	1/4	L, U	T, Q, A, B	R	P	SHA
RBR54#11R30%&	11.30	1/4	L, U	T, Q, A, B	R	P	SHA
RBR54#11R40%&	11.40	1/4	L, U	T, Q, A, B	R	P	SHA
RBR54#11R50%&	11.50	1/4	L, U	T, Q, A, B	R	P	SHA
RBR54#11R70%&	11.70	1/4	L, U	T, Q, A, B	R	P	SHA
	Resistance	Power	Terminal	Resistance	Level 1	Level 2	
Part Number	Value (Ohms)	Rating (W)	Characteristic (#)	Tolerance (%)	(FRL)(&)	(FRL)(&)	Manufacturer
RBR54#11R80%&	11.80	1/4	L, U	T, Q, A, B	R	P	SHA
RBR54#12R00%&	12.00	1/4	L, U	T, Q, A, B	R	P	SHA
RBR54#12R10%&	12.10	1/4	L, U	T, Q, A, B	R	P	SHA
RBR54#12R30%&	12.30	1/4	L, U	T, Q, A, B	R	P	SHA
RBR54#12R40%&	12.40	1/4	L, U	T, Q, A, B	R	P	SHA
RBR54#12R60%&	12.60	1/4	L, U	T, Q, A, B	R	P	SHA
RBR54#12R70%&	12.70	1/4	L, U	T, Q, A, B	R	P	SHA
RBR54#12R90%&	12.90	1/4	L, U	T, Q, A, B	R	P	SHA
RBR54#13R00%&	13.00	1/4	L, U	T, Q, A, B	R	P	SHA
RBR54#13R20%&	13.20	1/4	L, U	T, Q, A, B	R	P	SHA
RBR54#13R30%&	13.30	1/4	L, U	T, Q, A, B	R	P	SHA
RBR54#13R50%&	13.50	1/4	L, U	T, Q, A, B	R	P	SHA
RBR54#13R70%&	13.70	1/4	L, U	T, Q, A, B	R	P	SHA
RBR54#13R80%&	13.80	1/4	L, U	T, Q, A, B	R	P	SHA
	Resistance	Power	Terminal	Resistance	Level 1	Level 2	
Part Number	Value (Ohms)	Rating (W)	Characteristic (#)	Tolerance (%)	(FRL)(&)	(FRL)(&)	Manufacturer
RBR54#14R00%&	14.00	1/4	L, U	T, Q, A, B	R	P	SHA
RBR54#14R20%&	14.20	1/4	L, U	T, Q, A, B	R	P	SHA
RBR54#14R30%&	14.30	1/4	L, U	T, Q, A, B	R	P	SHA
RBR54#14R50%&	14.50	1/4	L, U	T, Q, A, B	R	P	SHA
RBR54#14R70%&	14.70	1/4	L, U	T, Q, A, B	R	P	SHA
RBR54#14R90%&	14.90	1/4	L, U	T, Q, A, B	R	P	SHA
RBR54#15R00%&	15.00	1/4	L, U	T, Q, A, B	R	P	SHA
RBR54#15R20%&	15.20	1/4	L, U	T, Q, A, B	R	P	SHA
RBR54#15R40%&	15.40	1/4	L, U	T, Q, A, B	R	P	SHA
RBR54#15R60%&	15.60	1/4	L, U	T, Q, A, B	R	P	SHA
RBR54#15R80%&	15.80	1/4	L, U	T, Q, A, B	R	P	SHA
RBR54#16R00%&	16.00	1/4	L, U	T, Q, A, B	R	P	SHA
RBR54#16R20%&	16.20	1/4	L, U	T, Q, A, B	R	P	SHA
RBR54#16R40%&	16.40	1/4	L, U	T, Q, A, B	R	P	SHA
	Resistance	Power	Terminal	Resistance	Level 1	Level 2	
Part Number	Value (Ohms)	Rating (W)	Characteristic (#)	Tolerance (%)	(FRL)(&)	(FRL)(&)	Manufacturer

RBR54#16R50%&	16.50	1/4	L, U	T, Q, A, B	R	P	SHA
RBR54#16R70%&	16.70	1/4	L, U	T, Q, A, B	R	P	SHA
RBR54#16R90%&	16.90	1/4	L, U	T, Q, A, B	R	P	SHA
RBR54#17R20%&	17.20	1/4	L, U	T, Q, A, B	R	P	SHA
RBR54#17R40%&	17.40	1/4	L, U	T, Q, A, B	R	P	SHA
RBR54#17R60%&	17.60	1/4	L, U	T, Q, A, B	R	P	SHA
RBR54#17R80%&	17.80	1/4	L, U	T, Q, A, B	R	P	SHA
RBR54#18R00%&	18.00	1/4	L, U	T, Q, A, B	R	P	SHA
RBR54#18R20%&	18.20	1/4	L, U	T, Q, A, B	R	P	SHA
RBR54#18R40%&	18.40	1/4	L, U	T, Q, A, B	R	P	SHA
RBR54#18R70%&	18.70	1/4	L, U	T, Q, A, B	R	P	SHA
RBR54#18R90%&	18.90	1/4	L, U	T, Q, A, B	R	P	SHA
RBR54#19R10%&	19.10	1/4	L, U	T, Q, A, B	R	P	SHA
RBR54#19R30%&	19.30	1/4	L, U	T, Q, A, B	R	P	SHA
	Resistance	Power	Terminal	Resistance	Level 1	Level 2	
Part Number	Value (Ohms)	Rating (W)	Characteristic (#)	Tolerance (%)	(FRL)(&)	(FRL)(&)	Manufacturer
RBR54#19R60%&	19.60	1/4	L, U	T, Q, A, B	R	P	SHA
RBR54#19R80%&	19.80	1/4	L, U	T, Q, A, B	R	P	SHA
RBR54#20R00%&	20.00	1/4	L, U	T, Q, A, B	R	P	SHA
RBR54#20R30%&	20.30	1/4	L, U	T, Q, A, B	R	P	SHA
RBR54#20R50%&	20.50	1/4	L, U	T, Q, A, B	R	P	SHA
RBR54#20R80%&	20.80	1/4	L, U	T, Q, A, B	R	P	SHA
RBR54#21R00%&	21.00	1/4	L, U	T, Q, A, B	R	P	SHA
RBR54#21R30%&	21.30	1/4	L, U	T, Q, A, B	R	P	SHA
RBR54#21R50%&	21.50	1/4	L, U	T, Q, A, B	R	P	SHA
RBR54#21R80%&	21.80	1/4	L, U	T, Q, A, B	R	P	SHA
RBR54#22R10%&	22.10	1/4	L, U	T, Q, A, B	R	P	SHA
RBR54#22R30%&	22.30	1/4	L, U	T, Q, A, B	R	P	SHA
RBR54#22R60%&	22.60	1/4	L, U	T, Q, A, B	R	P	SHA
RBR54#22R90%&	22.90	1/4	L, U	T, Q, A, B	R	P	SHA
	Resistance	Power	Terminal	Resistance	Level 1	Level 2	
Part Number	Value (Ohms)	Rating (W)	Characteristic (#)	Tolerance (%)	(FRL)(&)	(FRL)(&)	Manufacturer
RBR54#23R20%&	23.20	1/4	L, U	T, Q, A, B	R	P	SHA
RBR54#23R40%&	23.40	1/4	L, U	T, Q, A, B	R	P	SHA
RBR54#23R70%&	23.70	1/4	L, U	T, Q, A, B	R	P	SHA
RBR54#24R00%&	24.00	1/4	L, U	T, Q, A, B	R	P	SHA
RBR54#24R30%&	24.30	1/4	L, U	T, Q, A, B	R	P	SHA
RBR54#24R60%&	24.60	1/4	L, U	T, Q, A, B	R	P	SHA
RBR54#24R90%&	24.90	1/4	L, U	T, Q, A, B	R	P	SHA
RBR54#25R20%&	25.20	1/4	L, U	T, Q, A, B	R	P	SHA
RBR54#25R50%&	25.50	1/4	L, U	T, Q, A, B	R	P	SHA
RBR54#25R80%&	25.80	1/4	L, U	T, Q, A, B	R	P	SHA
RBR54#26R10%&	26.10	1/4	L, U	T, Q, A, B	R	P	SHA
RBR54#26R40%&	26.40	1/4	L, U	T, Q, A, B	R	P	SHA
RBR54#26R70%&	26.70	1/4	L, U	T, Q, A, B	R	P	SHA
	Resistance	Power	Terminal	Resistance	Level 1	Level 2	
Part Number	Value (Ohms)	Rating (W)	Characteristic (#)	Tolerance (%)	(FRL)(&)	(FRL)(&)	Manufacturer

RBR54#27R10%&	27.10	1/4	L, U	T, Q, A, B	R	P	SHA
RBR54#27R40%&	27.40	1/4	L, U	T, Q, A, B	R	P	SHA
RBR54#27R70%&	27.70	1/4	L, U	T, Q, A, B	R	P	SHA
RBR54#28R00%&	28.00	1/4	L, U	T, Q, A, B	R	P	SHA
RBR54#28R40%&	28.40	1/4	L, U	T, Q, A, B	R	P	SHA
RBR54#28R70%&	28.70	1/4	L, U	T, Q, A, B	R	P	SHA
RBR54#29R10%&	29.10	1/4	L, U	T, Q, A, B	R	P	SHA
RBR54#29R40%&	29.40	1/4	L, U	T, Q, A, B	R	P	SHA
RBR54#29R80%&	29.80	1/4	L, U	T, Q, A, B	R	P	SHA
RBR54#30R10%&	30.10	1/4	L, U	T, Q, A, B	R	P	SHA
RBR54#30R50%&	30.50	1/4	L, U	T, Q, A, B	R	P	SHA
RBR54#30R90%&	30.90	1/4	L, U	T, Q, A, B	R	P	SHA
RBR54#31R20%&	31.20	1/4	L, U	T, Q, A, B	R	P	SHA
RBR54#31R60%&	31.60	1/4	L, U	T, Q, A, B	R	P	SHA
	Resistance	Power	Terminal	Resistance	Level 1	Level 2	
Part Number	Value (Ohms)	Rating (W)	Characteristic (#)	Tolerance (%)	(FRL)(&)	(FRL)(&)	Manufacturer
RBR54#32R00%&	32.00	1/4	L, U	T, Q, A, B	R	P	SHA
RBR54#32R40%&	32.40	1/4	L, U	T, Q, A, B	R	P	SHA
RBR54#32R80%&	32.80	1/4	L, U	T, Q, A, B	R	P	SHA
RBR54#33R20%&	33.20	1/4	L, U	T, Q, A, B	R	P	SHA
RBR54#33R60%&	33.60	1/4	L, U	T, Q, A, B	R	P	SHA
RBR54#34R00%&	34.00	1/4	L, U	T, Q, A, B	R	P	SHA
RBR54#34R40%&	34.40	1/4	L, U	T, Q, A, B	R	P	SHA
RBR54#34R80%&	34.80	1/4	L, U	T, Q, A, B	R	P	SHA
RBR54#35R20%&	35.20	1/4	L, U	T, Q, A, B	R	P	SHA
RBR54#35R70%&	35.70	1/4	L, U	T, Q, A, B	R	P	SHA
RBR54#36R10%&	36.10	1/4	L, U	T, Q, A, B	R	P	SHA
RBR54#36R50%&	36.50	1/4	L, U	T, Q, A, B	R	P	SHA
RBR54#37R00%&	37.00	1/4	L, U	T, Q, A, B	R	P	SHA
RBR54#37R40%&	37.40	1/4	L, U	T, Q, A, B	R	P	SHA
	Resistance	Power	Terminal	Resistance	Level 1	Level 2	
Part Number	Value (Ohms)	Rating (W)	Characteristic (#)	Tolerance (%)	(FRL)(&)	(FRL)(&)	Manufacturer
RBR54#37R90%&	37.90	1/4	L, U	T, Q, A, B	R	P	SHA
RBR54#38R30%&	38.30	1/4	L, U	T, Q, A, B	R	P	SHA
RBR54#38R80%&	38.80	1/4	L, U	T, Q, A, B	R	P	SHA
RBR54#39R20%&	39.20	1/4	L, U	T, Q, A, B	R	P	SHA
RBR54#39R70%&	39.70	1/4	L, U	T, Q, A, B	R	P	SHA
RBR54#40R20%&	40.20	1/4	L, U	T, Q, A, B	R	P	SHA
RBR54#40R70%&	40.70	1/4	L, U	T, Q, A, B	R	P	SHA
RBR54#41R20%&	41.20	1/4	L, U	T, Q, A, B	R	P	SHA
RBR54#41R70%&	41.70	1/4	L, U	T, Q, A, B	R	P	SHA
RBR54#42R20%&	42.20	1/4	L, U	T, Q, A, B	R	P	SHA
RBR54#42R70%&	42.70	1/4	L, U	T, Q, A, B	R	P	SHA
RBR54#43R20%&	43.20	1/4	L, U	T, Q, A, B	R	P	SHA
RBR54#43R70%&	43.70	1/4	L, U	T, Q, A, B	R	P	SHA
	Resistance	Power	Terminal	Resistance	Level 1	Level 2	
Part Number	Value (Ohms)	Rating (W)	Characteristic (#)	Tolerance (%)	(FRL)(&)	(FRL)(&)	Manufacturer

RBR54#44R20%&	44.20	1/4	L, U	T, Q, A, B	R	P	SHA
RBR54#44R80%&	44.80	1/4	L, U	T, Q, A, B	R	P	SHA
RBR54#45R30%&	45.30	1/4	L, U	T, Q, A, B	R	P	SHA
RBR54#45R90%&	45.90	1/4	L, U	T, Q, A, B	R	P	SHA
RBR54#46R40%&	46.40	1/4	L, U	T, Q, A, B	R	P	SHA
RBR54#47R00%&	47.00	1/4	L, U	T, Q, A, B	R	P	SHA
RBR54#47R50%&	47.50	1/4	L, U	T, Q, A, B	R	P	SHA
RBR54#48R10%&	48.10	1/4	L, U	T, Q, A, B	R	P	SHA
RBR54#48R70%&	48.70	1/4	L, U	T, Q, A, B	R	P	SHA
RBR54#49R30%&	49.30	1/4	L, U	T, Q, A, B	R	P	SHA
RBR54#49R90%&	49.90	1/4	L, U	T, Q, A, B	R	P	SHA
RBR54#50R50%&	50.50	1/4	L, U	T, Q, A, B	R	P	SHA
RBR54#51R10%&	51.10	1/4	L, U	T, Q, A, B	R	P	SHA
RBR54#51R70%&	51.70	1/4	L, U	T, Q, A, B	R	P	SHA
	Resistance	Power	Terminal	Resistance	Level 1	Level 2	
Part Number	Value (Ohms)	Rating (W)	Characteristic (#)	Tolerance (%)	(FRL)(&)	(FRL)(&)	Manufacturer
RBR54#52R30%&	52.30	1/4	L, U	T, Q, A, B	R	P	SHA
RBR54#53R00%&	53.00	1/4	L, U	T, Q, A, B	R	P	SHA
RBR54#53R60%&	53.60	1/4	L, U	T, Q, A, B	R	P	SHA
RBR54#54R20%&	54.20	1/4	L, U	T, Q, A, B	R	P	SHA
RBR54#54R90%&	54.90	1/4	L, U	T, Q, A, B	R	P	SHA
RBR54#55R60%&	55.60	1/4	L, U	T, Q, A, B	R	P	SHA
RBR54#56R20%&	56.20	1/4	L, U	T, Q, A, B	R	P	SHA
RBR54#56R90%&	56.90	1/4	L, U	T, Q, A, B	R	P	SHA
RBR54#57R60%&	57.60	1/4	L, U	T, Q, A, B	R	P	SHA
RBR54#58R30%&	58.30	1/4	L, U	T, Q, A, B	R	P	SHA
RBR54#59R00%&	59.00	1/4	L, U	T, Q, A, B	R	P	SHA
RBR54#59R70%&	59.70	1/4	L, U	T, Q, A, B	R	P	SHA
RBR54#60R40%&	60.40	1/4	L, U	T, Q, A, B	R	P	SHA
RBR54#61R20%&	61.20	1/4	L, U	T, Q, A, B	R	P	SHA
	Resistance	Power	Terminal	Resistance	Level 1	Level 2	
Part Number	Value (Ohms)	Rating (W)	Characteristic (#)	Tolerance (%)	(FRL)(&)	(FRL)(&)	Manufacturer
RBR54#61R90%&	61.90	1/4	L, U	T, Q, A, B	R	P	SHA
RBR54#62R60%&	62.60	1/4	L, U	T, Q, A, B	R	P	SHA
RBR54#63R40%&	63.40	1/4	L, U	T, Q, A, B	R	P	SHA
RBR54#64R20%&	64.20	1/4	L, U	T, Q, A, B	R	P	SHA
RBR54#64R90%&	64.90	1/4	L, U	T, Q, A, B	R	P	SHA
RBR54#65R70%&	65.70	1/4	L, U	T, Q, A, B	R	P	SHA
RBR54#66R50%&	66.50	1/4	L, U	T, Q, A, B	R	P	SHA
RBR54#67R30%&	67.30	1/4	L, U	T, Q, A, B	R	P	SHA
RBR54#68R10%&	68.10	1/4	L, U	T, Q, A, B	R	P	SHA
RBR54#69R00%&	69.00	1/4	L, U	T, Q, A, B	R	P	SHA
RBR54#69R80%&	69.80	1/4	L, U	T, Q, A, B	R	P	SHA
RBR54#70R60%&	70.60	1/4	L, U	T, Q, A, B	R	P	SHA
RBR54#71R50%&	71.50	1/4	L, U	T, Q, A, B	R	P	SHA
	Resistance	Power	Terminal	Resistance	Level 1	Level 2	
Part Number	Value (Ohms)	Rating (W)	Characteristic (#)	Tolerance (%)	(FRL)(&)	(FRL)(&)	Manufacturer

RBR54#72R30%&	72.30	1/4	L, U	T, Q, A, B	R	P	SHA
RBR54#73R20%&	73.20	1/4	L, U	T, Q, A, B	R	P	SHA
RBR54#74R10%&	74.10	1/4	L, U	T, Q, A, B	R	P	SHA
RBR54#75R00%&	75.00	1/4	L, U	T, Q, A, B	R	P	SHA
RBR54#75R90%&	75.90	1/4	L, U	T, Q, A, B	R	P	SHA
RBR54#76R80%&	76.80	1/4	L, U	T, Q, A, B	R	P	SHA
RBR54#77R70%&	77.70	1/4	L, U	T, Q, A, B	R	P	SHA
RBR54#78R70%&	78.70	1/4	L, U	T, Q, A, B	R	P	SHA
RBR54#79R60%&	79.60	1/4	L, U	T, Q, A, B	R	P	SHA
RBR54#80R60%&	80.60	1/4	L, U	T, Q, A, B	R	P	SHA
RBR54#81R60%&	81.60	1/4	L, U	T, Q, A, B	R	P	SHA
RBR54#82R50%&	82.50	1/4	L, U	T, Q, A, B	R	P	SHA
RBR54#83R50%&	83.50	1/4	L, U	T, Q, A, B	R	P	SHA
RBR54#84R50%&	84.50	1/4	L, U	T, Q, A, B	R	P	SHA
	Resistance	Power	Terminal	Resistance	Level 1	Level 2	
Part Number	Value (Ohms)	Rating (W)	Characteristic (#)	Tolerance (%)	(FRL)(&)	(FRL)(&)	Manufacturer
RBR54#85R60%&	85.60	1/4	L, U	T, Q, A, B	R	P	SHA
RBR54#86R60%&	86.60	1/4	L, U	T, Q, A, B	R	P	SHA
RBR54#87R60%&	87.60	1/4	L, U	T, Q, A, B	R	P	SHA
RBR54#88R70%&	88.70	1/4	L, U	T, Q, A, B	R	P	SHA
RBR54#89R80%&	89.80	1/4	L, U	T, Q, A, B	R	P	SHA
RBR54#90R90%&	90.90	1/4	L, U	T, Q, A, B	R	P	SHA
RBR54#92R00%&	92.00	1/4	L, U	T, Q, A, B	R	P	SHA
RBR54#93R10%&	93.10	1/4	L, U	T, Q, A, B	R	P	SHA
RBR54#94R20%&	94.20	1/4	L, U	T, Q, A, B	R	P	SHA
RBR54#95R30%&	95.30	1/4	L, U	T, Q, A, B	R	P	SHA
RBR54#96R50%&	96.50	1/4	L, U	T, Q, A, B	R	P	SHA
RBR54#97R60%&	97.60	1/4	L, U	T, Q, A, B	R	P	SHA
RBR54#98R80%&	98.80	1/4	L, U	T, Q, A, B	R	P	SHA
	Resistance	Power	Terminal	Resistance	Level 1	Level 2	
Part Number	Value (Ohms)	Rating (W)	Characteristic (#)	Tolerance (%)	(FRL)(&)	(FRL)(&)	Manufacturer

RBR54 Wirewound Resistors: 100.0 Ohms through 988.0 Ohms

	Resistance	Power	Terminal	Resistance	Level 1	Level 2	
Part Number	Value (Ohms)	Rating (W)	Characteristic (#)	Tolerance (%)	(FRL)(&)	(FRL)(&)	Manufacturer
RBR54#100R0%&	100.0	1/4	L, U	T, Q, A, B	R	P	SHA
RBR54#101R0%&	101.0	1/4	L, U	T, Q, A, B	R	P	SHA
RBR54#102R0%&	102.0	1/4	L, U	T, Q, A, B	R	P	SHA
RBR54#104R0%&	104.0	1/4	L, U	T, Q, A, B	R	P	SHA
RBR54#105R0%&	105.0	1/4	L, U	T, Q, A, B	R	P	SHA
RBR54#106R0%&	106.0	1/4	L, U	T, Q, A, B	R	P	SHA
RBR54#107R0%&	107.0	1/4	L, U	T, Q, A, B	R	P	SHA
RBR54#109R0%&	109.0	1/4	L, U	T, Q, A, B	R	P	SHA
RBR54#110R0%&	110.0	1/4	L, U	T, Q, A, B	R	P	SHA

RBR54#111R0%&	111.0	1/4	L, U	T, Q, A, B	R	P	SHA
RBR54#113R0%&	113.0	1/4	L, U	T, Q, A, B	R	P	SHA
RBR54#114R0%&	114.0	1/4	L, U	T, Q, A, B	R	P	SHA
RBR54#115R0%&	115.0	1/4	L, U	T, Q, A, B	R	P	SHA
RBR54#117R0%&	117.0	1/4	L, U	T, Q, A, B	R	P	SHA
	Resistance	Power	Terminal	Resistance	Level 1	Level 2	
Part Number	Value (Ohms)	Rating (W)	Characteristic (#)	Tolerance (%)	(FRL)(&)	(FRL)(&)	Manufacturer
RBR54#118R0%&	118.0	1/4	L, U	T, Q, A, B	R	P	SHA
RBR54#120R0%&	120.0	1/4	L, U	T, Q, A, B	R	P	SHA
RBR54#121R0%&	121.0	1/4	L, U	T, Q, A, B	R	P	SHA
RBR54#123R0%&	123.0	1/4	L, U	T, Q, A, B	R	P	SHA
RBR54#124R0%&	124.0	1/4	L, U	T, Q, A, B	R	P	SHA
RBR54#126R0%&	126.0	1/4	L, U	T, Q, A, B	R	P	SHA
RBR54#127R0%&	127.0	1/4	L, U	T, Q, A, B	R	P	SHA
RBR54#129R0%&	129.0	1/4	L, U	T, Q, A, B	R	P	SHA
RBR54#130R0%&	130.0	1/4	L, U	T, Q, A, B	R	P	SHA
RBR54#132R0%&	132.0	1/4	L, U	T, Q, A, B	R	P	SHA
RBR54#133R0%&	133.0	1/4	L, U	T, Q, A, B	R	P	SHA
RBR54#135R0%&	135.0	1/4	L, U	T, Q, A, B	R	P	SHA
RBR54#137R0%&	137.0	1/4	L, U	T, Q, A, B	R	P	SHA
RBR54#138R0%&	138.0	1/4	L, U	T, Q, A, B	R	P	SHA
	Resistance	Power	Terminal	Resistance	Level 1	Level 2	
Part Number	Value (Ohms)	Rating (W)	Characteristic (#)	Tolerance (%)	(FRL)(&)	(FRL)(&)	Manufacturer
RBR54#140R0%&	140.0	1/4	L, U	T, Q, A, B	R	P	SHA
RBR54#142R0%&	142.0	1/4	L, U	T, Q, A, B	R	P	SHA
RBR54#143R0%&	143.0	1/4	L, U	T, Q, A, B	R	P	SHA
RBR54#145R0%&	145.0	1/4	L, U	T, Q, A, B	R	P	SHA
RBR54#147R0%&	147.0	1/4	L, U	T, Q, A, B	R	P	SHA
RBR54#149R0%&	149.0	1/4	L, U	T, Q, A, B	R	P	SHA
RBR54#150R0%&	150.0	1/4	L, U	T, Q, A, B	R	P	SHA
RBR54#152R0%&	152.0	1/4	L, U	T, Q, A, B	R	P	SHA
RBR54#154R0%&	154.0	1/4	L, U	T, Q, A, B	R	P	SHA
RBR54#156R0%&	156.0	1/4	L, U	T, Q, A, B	R	P	SHA
RBR54#158R0%&	158.0	1/4	L, U	T, Q, A, B	R	P	SHA
RBR54#160R0%&	160.0	1/4	L, U	T, Q, A, B	R	P	SHA
RBR54#162R0%&	162.0	1/4	L, U	T, Q, A, B	R	P	SHA
RBR54#164R0%&	164.0	1/4	L, U	T, Q, A, B	R	P	SHA
	Resistance	Power	Terminal	Resistance	Level 1	Level 2	
Part Number	Value (Ohms)	Rating (W)	Characteristic (#)	Tolerance (%)	(FRL)(&)	(FRL)(&)	Manufacturer
RBR54#165R0%&	165.0	1/4	L, U	T, Q, A, B	R	P	SHA
RBR54#167R0%&	167.0	1/4	L, U	T, Q, A, B	R	P	SHA
RBR54#169R0%&	169.0	1/4	L, U	T, Q, A, B	R	P	SHA
RBR54#172R0%&	172.0	1/4	L, U	T, Q, A, B	R	P	SHA
RBR54#174R0%&	174.0	1/4	L, U	T, Q, A, B	R	P	SHA
RBR54#176R0%&	176.0	1/4	L, U	T, Q, A, B	R	P	SHA
RBR54#178R0%&	178.0	1/4	L, U	T, Q, A, B	R	P	SHA
RBR54#180R0%&	180.0	1/4	L, U	T, Q, A, B	R	P	SHA

RBR54#182R0%&	182.0	1/4	L, U	T, Q, A, B	R	P	SHA
RBR54#184R0%&	184.0	1/4	L, U	T, Q, A, B	R	P	SHA
RBR54#187R0%&	187.0	1/4	L, U	T, Q, A, B	R	P	SHA
RBR54#189R0%&	189.0	1/4	L, U	T, Q, A, B	R	P	SHA
RBR54#191R0%&	191.0	1/4	L, U	T, Q, A, B	R	P	SHA
RBR54#193R0%&	193.0	1/4	L, U	T, Q, A, B	R	P	SHA
	Resistance	Power	Terminal	Resistance	Level 1	Level 2	
Part Number	Value (Ohms)	Rating (W)	Characteristic (#)	Tolerance (%)	(FRL)(&)	(FRL)(&)	Manufacturer
RBR54#196R0%&	196.0	1/4	L, U	T, Q, A, B	R	P	SHA
RBR54#198R0%&	198.0	1/4	L, U	T, Q, A, B	R	P	SHA
RBR54#200R0%&	200.0	1/4	L, U	T, Q, A, B	R	P	SHA
RBR54#203R0%&	203.0	1/4	L, U	T, Q, A, B	R	P	SHA
RBR54#205R0%&	205.0	1/4	L, U	T, Q, A, B	R	P	SHA
RBR54#208R0%&	208.0	1/4	L, U	T, Q, A, B	R	P	SHA
RBR54#210R0%&	210.0	1/4	L, U	T, Q, A, B	R	P	SHA
RBR54#213R0%&	213.0	1/4	L, U	T, Q, A, B	R	P	SHA
RBR54#215R0%&	215.0	1/4	L, U	T, Q, A, B	R	P	SHA
RBR54#218R0%&	218.0	1/4	L, U	T, Q, A, B	R	P	SHA
RBR54#221R0%&	221.0	1/4	L, U	T, Q, A, B	R	P	SHA
RBR54#223R0%&	223.0	1/4	L, U	T, Q, A, B	R	P	SHA
RBR54#226R0%&	226.0	1/4	L, U	T, Q, A, B	R	P	SHA
RBR54#229R0%&	229.0	1/4	L, U	T, Q, A, B	R	P	SHA
	Resistance	Power	Terminal	Resistance	Level 1	Level 2	
Part Number	Value (Ohms)	Rating (W)	Characteristic (#)	Tolerance (%)	(FRL)(&)	(FRL)(&)	Manufacturer
RBR54#232R0%&	232.0	1/4	L, U	T, Q, A, B	R	P	SHA
RBR54#234R0%&	234.0	1/4	L, U	T, Q, A, B	R	P	SHA
RBR54#237R0%&	237.0	1/4	L, U	T, Q, A, B	R	P	SHA
RBR54#240R0%&	240.0	1/4	L, U	T, Q, A, B	R	P	SHA
RBR54#243R0%&	243.0	1/4	L, U	T, Q, A, B	R	P	SHA
RBR54#246R0%&	246.0	1/4	L, U	T, Q, A, B	R	P	SHA
RBR54#249R0%&	249.0	1/4	L, U	T, Q, A, B	R	P	SHA
RBR54#252R0%&	252.0	1/4	L, U	T, Q, A, B	R	P	SHA
RBR54#255R0%&	255.0	1/4	L, U	T, Q, A, B	R	P	SHA
RBR54#258R0%&	258.0	1/4	L, U	T, Q, A, B	R	P	SHA
RBR54#261R0%&	261.0	1/4	L, U	T, Q, A, B	R	P	SHA
RBR54#264R0%&	264.0	1/4	L, U	T, Q, A, B	R	P	SHA
RBR54#267R0%&	267.0	1/4	L, U	T, Q, A, B	R	P	SHA
	Resistance	Power	Terminal	Resistance	Level 1	Level 2	
Part Number	Value (Ohms)	Rating (W)	Characteristic (#)	Tolerance (%)	(FRL)(&)	(FRL)(&)	Manufacturer
RBR54#271R0%&	271.0	1/4	L, U	T, Q, A, B	R	P	SHA
RBR54#274R0%&	274.0	1/4	L, U	T, Q, A, B	R	P	SHA
RBR54#277R0%&	277.0	1/4	L, U	T, Q, A, B	R	P	SHA
RBR54#280R0%&	280.0	1/4	L, U	T, Q, A, B	R	P	SHA
RBR54#284R0%&	284.0	1/4	L, U	T, Q, A, B	R	P	SHA
RBR54#287R0%&	287.0	1/4	L, U	T, Q, A, B	R	P	SHA
RBR54#291R0%&	291.0	1/4	L, U	T, Q, A, B	R	P	SHA
RBR54#294R0%&	294.0	1/4	L, U	T, Q, A, B	R	P	SHA

RBR54#298R0%&	298.0	1/4	L, U	T, Q, A, B	R	P	SHA
RBR54#301R0%&	301.0	1/4	L, U	T, Q, A, B	R	P	SHA
RBR54#305R0%&	305.0	1/4	L, U	T, Q, A, B	R	P	SHA
RBR54#309R0%&	309.0	1/4	L, U	T, Q, A, B	R	P	SHA
RBR54#312R0%&	312.0	1/4	L, U	T, Q, A, B	R	P	SHA
RBR54#316R0%&	316.0	1/4	L, U	T, Q, A, B	R	P	SHA
	Resistance	Power	Terminal	Resistance	Level 1	Level 2	
Part Number	Value (Ohms)	Rating (W)	Characteristic (#)	Tolerance (%)	(FRL)(&)	(FRL)(&)	Manufacturer
RBR54#320R0%&	320.0	1/4	L, U	T, Q, A, B	R	P	SHA
RBR54#324R0%&	324.0	1/4	L, U	T, Q, A, B	R	P	SHA
RBR54#328R0%&	328.0	1/4	L, U	T, Q, A, B	R	P	SHA
RBR54#332R0%&	332.0	1/4	L, U	T, Q, A, B	R	P	SHA
RBR54#336R0%&	336.0	1/4	L, U	T, Q, A, B	R	P	SHA
RBR54#340R0%&	340.0	1/4	L, U	T, Q, A, B	R	P	SHA
RBR54#344R0%&	344.0	1/4	L, U	T, Q, A, B	R	P	SHA
RBR54#348R0%&	348.0	1/4	L, U	T, Q, A, B	R	P	SHA
RBR54#352R0%&	352.0	1/4	L, U	T, Q, A, B	R	P	SHA
RBR54#357R0%&	357.0	1/4	L, U	T, Q, A, B	R	P	SHA
RBR54#361R0%&	361.0	1/4	L, U	T, Q, A, B	R	P	SHA
RBR54#365R0%&	365.0	1/4	L, U	T, Q, A, B	R	P	SHA
RBR54#370R0%&	370.0	1/4	L, U	T, Q, A, B	R	P	SHA
RBR54#374R0%&	374.0	1/4	L, U	T, Q, A, B	R	P	SHA
	Resistance	Power	Terminal	Resistance	Level 1	Level 2	
Part Number	Value (Ohms)	Rating (W)	Characteristic (#)	Tolerance (%)	(FRL)(&)	(FRL)(&)	Manufacturer
RBR54#379R0%&	379.0	1/4	L, U	T, Q, A, B	R	P	SHA
RBR54#383R0%&	383.0	1/4	L, U	T, Q, A, B	R	P	SHA
RBR54#388R0%&	388.0	1/4	L, U	T, Q, A, B	R	P	SHA
RBR54#392R0%&	392.0	1/4	L, U	T, Q, A, B	R	P	SHA
RBR54#397R0%&	397.0	1/4	L, U	T, Q, A, B	R	P	SHA
RBR54#402R0%&	402.0	1/4	L, U	T, Q, A, B	R	P	SHA
RBR54#407R0%&	407.0	1/4	L, U	T, Q, A, B	R	P	SHA
RBR54#412R0%&	412.0	1/4	L, U	T, Q, A, B	R	P	SHA
RBR54#417R0%&	417.0	1/4	L, U	T, Q, A, B	R	P	SHA
RBR54#422R0%&	422.0	1/4	L, U	T, Q, A, B	R	P	SHA
RBR54#427R0%&	427.0	1/4	L, U	T, Q, A, B	R	P	SHA
RBR54#432R0%&	432.0	1/4	L, U	T, Q, A, B	R	P	SHA
RBR54#437R0%&	437.0	1/4	L, U	T, Q, A, B	R	P	SHA
	Resistance	Power	Terminal	Resistance	Level 1	Level 2	
Part Number	Value (Ohms)	Rating (W)	Characteristic (#)	Tolerance (%)	(FRL)(&)	(FRL)(&)	Manufacturer
RBR54#442R0%&	442.0	1/4	L, U	T, Q, A, B	R	P	SHA
RBR54#448R0%&	448.0	1/4	L, U	T, Q, A, B	R	P	SHA
RBR54#453R0%&	453.0	1/4	L, U	T, Q, A, B	R	P	SHA
RBR54#459R0%&	459.0	1/4	L, U	T, Q, A, B	R	P	SHA
RBR54#464R0%&	464.0	1/4	L, U	T, Q, A, B	R	P	SHA
RBR54#470R0%&	470.0	1/4	L, U	T, Q, A, B	R	P	SHA
RBR54#475R0%&	475.0	1/4	L, U	T, Q, A, B	R	P	SHA
RBR54#481R0%&	481.0	1/4	L, U	T, Q, A, B	R	P	SHA

RBR54#487R0%&	487.0	1/4	L, U	T, Q, A, B	R	P	SHA
RBR54#493R0%&	493.0	1/4	L, U	T, Q, A, B	R	P	SHA
RBR54#499R0%&	499.0	1/4	L, U	T, Q, A, B	R	P	SHA
RBR54#505R0%&	505.0	1/4	L, U	T, Q, A, B	R	P	SHA
RBR54#511R0%&	511.0	1/4	L, U	T, Q, A, B	R	P	SHA
RBR54#517R0%&	517.0	1/4	L, U	T, Q, A, B	R	P	SHA
	Resistance	Power	Terminal	Resistance	Level 1	Level 2	
Part Number	Value (Ohms)	Rating (W)	Characteristic (#)	Tolerance (%)	(FRL)(&)	(FRL)(&)	Manufacturer
RBR54#523R0%&	523.0	1/4	L, U	T, Q, A, B	R	P	SHA
RBR54#530R0%&	530.0	1/4	L, U	T, Q, A, B	R	P	SHA
RBR54#536R0%&	536.0	1/4	L, U	T, Q, A, B	R	P	SHA
RBR54#542R0%&	542.0	1/4	L, U	T, Q, A, B	R	P	SHA
RBR54#549R0%&	549.0	1/4	L, U	T, Q, A, B	R	P	SHA
RBR54#556R0%&	556.0	1/4	L, U	T, Q, A, B	R	P	SHA
RBR54#562R0%&	562.0	1/4	L, U	T, Q, A, B	R	P	SHA
RBR54#569R0%&	569.0	1/4	L, U	T, Q, A, B	R	P	SHA
RBR54#576R0%&	576.0	1/4	L, U	T, Q, A, B	R	P	SHA
RBR54#583R0%&	583.0	1/4	L, U	T, Q, A, B	R	P	SHA
RBR54#590R0%&	590.0	1/4	L, U	T, Q, A, B	R	P	SHA
RBR54#597R0%&	597.0	1/4	L, U	T, Q, A, B	R	P	SHA
RBR54#604R0%&	604.0	1/4	L, U	T, Q, A, B	R	P	SHA
RBR54#612R0%&	612.0	1/4	L, U	T, Q, A, B	R	P	SHA
	Resistance	Power	Terminal	Resistance	Level 1	Level 2	
Part Number	Value (Ohms)	Rating (W)	Characteristic (#)	Tolerance (%)	(FRL)(&)	(FRL)(&)	Manufacturer
RBR54#619R0%&	619.0	1/4	L, U	T, Q, A, B	R	P	SHA
RBR54#626R0%&	626.0	1/4	L, U	T, Q, A, B	R	P	SHA
RBR54#634R0%&	634.0	1/4	L, U	T, Q, A, B	R	P	SHA
RBR54#642R0%&	642.0	1/4	L, U	T, Q, A, B	R	P	SHA
RBR54#649R0%&	649.0	1/4	L, U	T, Q, A, B	R	P	SHA
RBR54#657R0%&	657.0	1/4	L, U	T, Q, A, B	R	P	SHA
RBR54#665R0%&	665.0	1/4	L, U	T, Q, A, B	R	P	SHA
RBR54#673R0%&	673.0	1/4	L, U	T, Q, A, B	R	P	SHA
RBR54#681R0%&	681.0	1/4	L, U	T, Q, A, B	R	P	SHA
RBR54#690R0%&	690.0	1/4	L, U	T, Q, A, B	R	P	SHA
RBR54#698R0%&	698.0	1/4	L, U	T, Q, A, B	R	P	SHA
RBR54#706R0%&	706.0	1/4	L, U	T, Q, A, B	R	P	SHA
RBR54#715R0%&	715.0	1/4	L, U	T, Q, A, B	R	P	SHA
	Resistance	Power	Terminal	Resistance	Level 1	Level 2	
Part Number	Value (Ohms)	Rating (W)	Characteristic (#)	Tolerance (%)	(FRL)(&)	(FRL)(&)	Manufacturer
RBR54#723R0%&	723.0	1/4	L, U	T, Q, A, B	R	P	SHA
RBR54#732R0%&	732.0	1/4	L, U	T, Q, A, B	R	P	SHA
RBR54#741R0%&	741.0	1/4	L, U	T, Q, A, B	R	P	SHA
RBR54#750R0%&	750.0	1/4	L, U	T, Q, A, B	R	P	SHA
RBR54#759R0%&	759.0	1/4	L, U	T, Q, A, B	R	P	SHA
RBR54#768R0%&	768.0	1/4	L, U	T, Q, A, B	R	P	SHA
RBR54#777R0%&	777.0	1/4	L, U	T, Q, A, B	R	P	SHA
RBR54#787R0%&	787.0	1/4	L, U	T, Q, A, B	R	P	SHA

RBR54#796R0%&	796.0	1/4	L, U	T, Q, A, B	R	P	SHA
RBR54#806R0%&	806.0	1/4	L, U	T, Q, A, B	R	P	SHA
RBR54#816R0%&	816.0	1/4	L, U	T, Q, A, B	R	P	SHA
RBR54#825R0%&	825.0	1/4	L, U	T, Q, A, B	R	P	SHA
RBR54#835R0%&	835.0	1/4	L, U	T, Q, A, B	R	P	SHA
RBR54#845R0%&	845.0	1/4	L, U	T, Q, A, B	R	P	SHA
	Resistance	Power	Terminal	Resistance	Level 1	Level 2	
Part Number	Value (Ohms)	Rating (W)	Characteristic (#)	Tolerance (%)	(FRL)(&)	(FRL)(&)	Manufacturer
RBR54#856R0%&	856.0	1/4	L, U	T, Q, A, B	R	P	SHA
RBR54#866R0%&	866.0	1/4	L, U	T, Q, A, B	R	P	SHA
RBR54#876R0%&	876.0	1/4	L, U	T, Q, A, B	R	P	SHA
RBR54#887R0%&	887.0	1/4	L, U	T, Q, A, B	R	P	SHA
RBR54#898R0%&	898.0	1/4	L, U	T, Q, A, B	R	P	SHA
RBR54#909R0%&	909.0	1/4	L, U	T, Q, A, B	R	P	SHA
RBR54#920R0%&	920.0	1/4	L, U	T, Q, A, B	R	P	SHA
RBR54#931R0%&	931.0	1/4	L, U	T, Q, A, B	R	P	SHA
RBR54#942R0%&	942.0	1/4	L, U	T, Q, A, B	R	P	SHA
RBR54#953R0%&	953.0	1/4	L, U	T, Q, A, B	R	P	SHA
RBR54#965R0%&	965.0	1/4	L, U	T, Q, A, B	R	P	SHA
RBR54#976R0%&	976.0	1/4	L, U	T, Q, A, B	R	P	SHA
RBR54#988R0%&	988.0	1/4	L, U	T, Q, A, B	R	P	SHA
	Resistance	Power	Terminal	Resistance	Level 1	Level 2	
Part Number	Value (Ohms)	Rating (W)	Characteristic (#)	Tolerance (%)	(FRL)(&)	(FRL)(&)	Manufacturer

RBR54 Wirewound Resistors: 1,000 Ohms through 9,880 Ohms

	Resistance	Power	Terminal	Resistance	Level 1	Level 2	
Part Number	Value (Ohms)	Rating (W)	Characteristic (#)	Tolerance (%)	(FRL)(&)	(FRL)(&)	Manufacturer
RBR54#10000%&	1,000	1/4	L, U	T, Q, A, B	R	P	SHA
RBR54#10100%&	1,010	1/4	L, U	T, Q, A, B	R	P	SHA
RBR54#10200%&	1,020	1/4	L, U	T, Q, A, B	R	P	SHA
RBR54#10400%&	1,040	1/4	L, U	T, Q, A, B	R	P	SHA
RBR54#10500%&	1,050	1/4	L, U	T, Q, A, B	R	P	SHA
RBR54#10600%&	1,060	1/4	L, U	T, Q, A, B	R	P	SHA
RBR54#10700%&	1,070	1/4	L, U	T, Q, A, B	R	P	SHA
RBR54#10900%&	1,090	1/4	L, U	T, Q, A, B	R	P	SHA
RBR54#11000%&	1,100	1/4	L, U	T, Q, A, B	R	P	SHA
RBR54#11100%&	1,110	1/4	L, U	T, Q, A, B	R	P	SHA
RBR54#11300%&	1,130	1/4	L, U	T, Q, A, B	R	P	SHA
RBR54#11400%&	1,140	1/4	L, U	T, Q, A, B	R	P	SHA
RBR54#11500%&	1,150	1/4	L, U	T, Q, A, B	R	P	SHA
RBR54#11700%&	1,170	1/4	L, U	T, Q, A, B	R	P	SHA
	Resistance	Power	Terminal	Resistance	Level 1	Level 2	
Part Number	Value (Ohms)	Rating (W)	Characteristic (#)	Tolerance (%)	(FRL)(&)	(FRL)(&)	Manufacturer
RBR54#11800%&	1,180	1/4	L, U	T, Q, A, B	R	P	SHA

RBR54#12000%&	1,200	1/4	L, U	T, Q, A, B	R	P	SHA
RBR54#12100%&	1,210	1/4	L, U	T, Q, A, B	R	P	SHA
RBR54#12300%&	1,230	1/4	L, U	T, Q, A, B	R	P	SHA
RBR54#12400%&	1,240	1/4	L, U	T, Q, A, B	R	P	SHA
RBR54#12600%&	1,260	1/4	L, U	T, Q, A, B	R	P	SHA
RBR54#12700%&	1,270	1/4	L, U	T, Q, A, B	R	P	SHA
RBR54#12900%&	1,290	1/4	L, U	T, Q, A, B	R	P	SHA
RBR54#13000%&	1,300	1/4	L, U	T, Q, A, B	R	P	SHA
RBR54#13200%&	1,320	1/4	L, U	T, Q, A, B	R	P	SHA
RBR54#13300%&	1,330	1/4	L, U	T, Q, A, B	R	P	SHA
RBR54#13500%&	1,350	1/4	L, U	T, Q, A, B	R	P	SHA
RBR54#13700%&	1,370	1/4	L, U	T, Q, A, B	R	P	SHA
RBR54#13800%&	1,380	1/4	L, U	T, Q, A, B	R	P	SHA
	Resistance	Power	Terminal	Resistance	Level 1	Level 2	
Part Number	Value (Ohms)	Rating (W)	Characteristic (#)	Tolerance (%)	(FRL)(&)	(FRL)(&)	Manufacturer
	Resistance	Power	Terminal	Resistance	Level 1	Level 2	
Part Number	Value (Ohms)	Rating (W)	Characteristic (#)	Tolerance (%)	(FRL)(&)	(FRL)(&)	Manufacturer
RBR54#14000%&	1,400	1/4	L, U	T, Q, A, B	R	P	SHA
RBR54#14200%&	1,420	1/4	L, U	T, Q, A, B	R	P	SHA
RBR54#14300%&	1,430	1/4	L, U	T, Q, A, B	R	P	SHA
RBR54#14500%&	1,450	1/4	L, U	T, Q, A, B	R	P	SHA
RBR54#14700%&	1,470	1/4	L, U	T, Q, A, B	R	P	SHA
RBR54#14900%&	1,490	1/4	L, U	T, Q, A, B	R	P	SHA
RBR54#15000%&	1,500	1/4	L, U	T, Q, A, B	R	P	SHA
RBR54#15200%&	1,520	1/4	L, U	T, Q, A, B	R	P	SHA
RBR54#15400%&	1,540	1/4	L, U	T, Q, A, B	R	P	SHA
RBR54#15600%&	1,560	1/4	L, U	T, Q, A, B	R	P	SHA
RBR54#15800%&	1,580	1/4	L, U	T, Q, A, B	R	P	SHA
RBR54#16000%&	1,600	1/4	L, U	T, Q, A, B	R	P	SHA
RBR54#16200%&	1,620	1/4	L, U	T, Q, A, B	R	P	SHA
RBR54#16400%&	1,640	1/4	L, U	T, Q, A, B	R	P	SHA
	Resistance	Power	Terminal	Resistance	Level 1	Level 2	
Part Number	Value (Ohms)	Rating (W)	Characteristic (#)	Tolerance (%)	(FRL)(&)	(FRL)(&)	Manufacturer
RBR54#16500%&	1,650	1/4	L, U	T, Q, A, B	R	P	SHA
RBR54#16700%&	1,670	1/4	L, U	T, Q, A, B	R	P	SHA
RBR54#16900%&	1,690	1/4	L, U	T, Q, A, B	R	P	SHA
RBR54#17200%&	1,720	1/4	L, U	T, Q, A, B	R	P	SHA
RBR54#17400%&	1,740	1/4	L, U	T, Q, A, B	R	P	SHA
RBR54#17600%&	1,760	1/4	L, U	T, Q, A, B	R	P	SHA
RBR54#17800%&	1,780	1/4	L, U	T, Q, A, B	R	P	SHA
RBR54#18000%&	1,800	1/4	L, U	T, Q, A, B	R	P	SHA
RBR54#18200%&	1,820	1/4	L, U	T, Q, A, B	R	P	SHA
RBR54#18400%&	1,840	1/4	L, U	T, Q, A, B	R	P	SHA
RBR54#18700%&	1,870	1/4	L, U	T, Q, A, B	R	P	SHA
RBR54#18900%&	1,890	1/4	L, U	T, Q, A, B	R	P	SHA
RBR54#19100%&	1,910	1/4	L, U	T, Q, A, B	R	P	SHA
RBR54#19300%&	1,930	1/4	L, U	T, Q, A, B	R	P	SHA

	Resistance	Power	Terminal	Resistance	Level 1	Level 2	
Part Number	Value (Ohms)	Rating (W)	Characteristic (#)	Tolerance (%)	(FRL)(&)	(FRL)(&)	Manufacturer
RBR54#19600%&	1,960	1/4	L, U	T, Q, A, B	R	P	SHA
RBR54#19800%&	1,980	1/4	L, U	T, Q, A, B	R	P	SHA
RBR54#20000%&	2,000	1/4	L, U	T, Q, A, B	R	P	SHA
RBR54#20300%&	2,030	1/4	L, U	T, Q, A, B	R	P	SHA
RBR54#20500%&	2,050	1/4	L, U	T, Q, A, B	R	P	SHA
RBR54#20800%&	2,080	1/4	L, U	T, Q, A, B	R	P	SHA
RBR54#21000%&	2,100	1/4	L, U	T, Q, A, B	R	P	SHA
RBR54#21300%&	2,130	1/4	L, U	T, Q, A, B	R	P	SHA
RBR54#21500%&	2,150	1/4	L, U	T, Q, A, B	R	P	SHA
RBR54#21800%&	2,180	1/4	L, U	T, Q, A, B	R	P	SHA
RBR54#22100%&	2,210	1/4	L, U	T, Q, A, B	R	P	SHA
RBR54#22300%&	2,230	1/4	L, U	T, Q, A, B	R	P	SHA
RBR54#22600%&	2,260	1/4	L, U	T, Q, A, B	R	P	SHA
RBR54#22900%&	2,290	1/4	L, U	T, Q, A, B	R	P	SHA
	Resistance	Power	Terminal	Resistance	Level 1	Level 2	
Part Number	Value (Ohms)	Rating (W)	Characteristic (#)	Tolerance (%)	(FRL)(&)	(FRL)(&)	Manufacturer
RBR54#23200%&	2,320	1/4	L, U	T, Q, A, B	R	P	SHA
RBR54#23400%&	2,340	1/4	L, U	T, Q, A, B	R	P	SHA
RBR54#23700%&	2,370	1/4	L, U	T, Q, A, B	R	P	SHA
RBR54#24000%&	2,400	1/4	L, U	T, Q, A, B	R	P	SHA
RBR54#24300%&	2,430	1/4	L, U	T, Q, A, B	R	P	SHA
RBR54#24600%&	2,460	1/4	L, U	T, Q, A, B	R	P	SHA
RBR54#24900%&	2,490	1/4	L, U	T, Q, A, B	R	P	SHA
RBR54#25200%&	2,520	1/4	L, U	T, Q, A, B	R	P	SHA
RBR54#25500%&	2,550	1/4	L, U	T, Q, A, B	R	P	SHA
RBR54#25800%&	2,580	1/4	L, U	T, Q, A, B	R	P	SHA
RBR54#26100%&	2,610	1/4	L, U	T, Q, A, B	R	P	SHA
RBR54#26400%&	2,640	1/4	L, U	T, Q, A, B	R	P	SHA
RBR54#26700%&	2,670	1/4	L, U	T, Q, A, B	R	P	SHA
RBR54#27100%&	2,710	1/4	L, U	T, Q, A, B	R	P	SHA
	Resistance	Power	Terminal	Resistance	Level 1	Level 2	
Part Number	Value (Ohms)	Rating (W)	Characteristic (#)	Tolerance (%)	(FRL)(&)	(FRL)(&)	Manufacturer
RBR54#27400%&	2,740	1/4	L, U	T, Q, A, B	R	P	SHA
RBR54#27700%&	2,770	1/4	L, U	T, Q, A, B	R	P	SHA
RBR54#28000%&	2,800	1/4	L, U	T, Q, A, B	R	P	SHA
RBR54#28400%&	2,840	1/4	L, U	T, Q, A, B	R	P	SHA
RBR54#28700%&	2,870	1/4	L, U	T, Q, A, B	R	P	SHA
RBR54#29100%&	2,910	1/4	L, U	T, Q, A, B	R	P	SHA
RBR54#29400%&	2,940	1/4	L, U	T, Q, A, B	R	P	SHA
RBR54#29800%&	2,980	1/4	L, U	T, Q, A, B	R	P	SHA
RBR54#30100%&	3,010	1/4	L, U	T, Q, A, B	R	P	SHA
RBR54#30500%&	3,050	1/4	L, U	T, Q, A, B	R	P	SHA
RBR54#30900%&	3,090	1/4	L, U	T, Q, A, B	R	P	SHA
RBR54#31200%&	3,120	1/4	L, U	T, Q, A, B	R	P	SHA
	Resistance	Power	Terminal	Resistance	Level 1	Level 2	

Part Number	Value (Ohms)	Rating (W)	Characteristic (#)	Tolerance (%)	(FRL)(&)	(FRL)(&)	Manufacturer
RBR54#31600%&	3,160	1/4	L, U	T, Q, A, B	R	P	SHA
RBR54#32000%&	3,200	1/4	L, U	T, Q, A, B	R	P	SHA
RBR54#32400%&	3,240	1/4	L, U	T, Q, A, B	R	P	SHA
RBR54#32800%&	3,280	1/4	L, U	T, Q, A, B	R	P	SHA
RBR54#33200%&	3,320	1/4	L, U	T, Q, A, B	R	P	SHA
RBR54#33600%&	3,360	1/4	L, U	T, Q, A, B	R	P	SHA
RBR54#34000%&	3,400	1/4	L, U	T, Q, A, B	R	P	SHA
RBR54#34400%&	3,440	1/4	L, U	T, Q, A, B	R	P	SHA
RBR54#34800%&	3,480	1/4	L, U	T, Q, A, B	R	P	SHA
RBR54#35200%&	3,520	1/4	L, U	T, Q, A, B	R	P	SHA
RBR54#35700%&	3,570	1/4	L, U	T, Q, A, B	R	P	SHA
RBR54#36100%&	3,610	1/4	L, U	T, Q, A, B	R	P	SHA
RBR54#36500%&	3,650	1/4	L, U	T, Q, A, B	R	P	SHA
RBR54#37000%&	3,700	1/4	L, U	T, Q, A, B	R	P	SHA
	Resistance	Power	Terminal	Resistance	Level 1	Level 2	
Part Number	Value (Ohms)	Rating (W)	Characteristic (#)	Tolerance (%)	(FRL)(&)	(FRL)(&)	Manufacturer
RBR54#37400%&	3,740	1/4	L, U	T, Q, A, B	R	P	SHA
RBR54#37900%&	3,790	1/4	L, U	T, Q, A, B	R	P	SHA
RBR54#38300%&	3,830	1/4	L, U	T, Q, A, B	R	P	SHA
RBR54#38800%&	3,880	1/4	L, U	T, Q, A, B	R	P	SHA
RBR54#39200%&	3,920	1/4	L, U	T, Q, A, B	R	P	SHA
RBR54#39700%&	3,970	1/4	L, U	T, Q, A, B	R	P	SHA
RBR54#40200%&	4,020	1/4	L, U	T, Q, A, B	R	P	SHA
RBR54#40700%&	4,070	1/4	L, U	T, Q, A, B	R	P	SHA
RBR54#41200%&	4,120	1/4	L, U	T, Q, A, B	R	P	SHA
RBR54#41700%&	4,170	1/4	L, U	T, Q, A, B	R	P	SHA
RBR54#42200%&	4,220	1/4	L, U	T, Q, A, B	R	P	SHA
RBR54#42700%&	4,270	1/4	L, U	T, Q, A, B	R	P	SHA
RBR54#43200%&	4,320	1/4	L, U	T, Q, A, B	R	P	SHA
RBR54#43700%&	4,370	1/4	L, U	T, Q, A, B	R	P	SHA
	Resistance	Power	Terminal	Resistance	Level 1	Level 2	
Part Number	Value (Ohms)	Rating (W)	Characteristic (#)	Tolerance (%)	(FRL)(&)	(FRL)(&)	Manufacturer
RBR54#44200%&	4,420	1/4	L, U	T, Q, A, B	R	P	SHA
RBR54#44800%&	4,480	1/4	L, U	T, Q, A, B	R	P	SHA
RBR54#45300%&	4,530	1/4	L, U	T, Q, A, B	R	P	SHA
RBR54#45900%&	4,590	1/4	L, U	T, Q, A, B	R	P	SHA
RBR54#46400%&	4,640	1/4	L, U	T, Q, A, B	R	P	SHA
RBR54#47000%&	4,700	1/4	L, U	T, Q, A, B	R	P	SHA
RBR54#47500%&	4,750	1/4	L, U	T, Q, A, B	R	P	SHA
RBR54#48100%&	4,810	1/4	L, U	T, Q, A, B	R	P	SHA
RBR54#48700%&	4,870	1/4	L, U	T, Q, A, B	R	P	SHA
RBR54#49300%&	4,930	1/4	L, U	T, Q, A, B	R	P	SHA
RBR54#49900%&	4,990	1/4	L, U	T, Q, A, B	R	P	SHA
RBR54#50500%&	5,050	1/4	L, U	T, Q, A, B	R	P	SHA
RBR54#51100%&	5,110	1/4	L, U	T, Q, A, B	R	P	SHA
RBR54#51700%&	5,170	1/4	L, U	T, Q, A, B	R	P	SHA

	Resistance	Power	Terminal	Resistance	Level 1	Level 2	
Part Number	Value (Ohms)	Rating (W)	Characteristic (#)	Tolerance (%)	(FRL)(&)	(FRL)(&)	Manufacturer
RBR54#52300%&	5,230	1/4	L, U	T, Q, A, B	R	P	SHA
RBR54#53000%&	5,300	1/4	L, U	T, Q, A, B	R	P	SHA
RBR54#53600%&	5,360	1/4	L, U	T, Q, A, B	R	P	SHA
RBR54#54200%&	5,420	1/4	L, U	T, Q, A, B	R	P	SHA
RBR54#54900%&	5,490	1/4	L, U	T, Q, A, B	R	P	SHA
RBR54#55600%&	5,560	1/4	L, U	T, Q, A, B	R	P	SHA
RBR54#56200%&	5,620	1/4	L, U	T, Q, A, B	R	P	SHA
RBR54#56900%&	5,690	1/4	L, U	T, Q, A, B	R	P	SHA
RBR54#57600%&	5,760	1/4	L, U	T, Q, A, B	R	P	SHA
RBR54#58300%&	5,830	1/4	L, U	T, Q, A, B	R	P	SHA
RBR54#59000%&	5,900	1/4	L, U	T, Q, A, B	R	P	SHA
RBR54#59700%&	5,970	1/4	L, U	T, Q, A, B	R	P	SHA
RBR54#60400%&	6,040	1/4	L, U	T, Q, A, B	R	P	SHA
RBR54#61200%&	6,120	1/4	L, U	T, Q, A, B	R	P	SHA
	Resistance	Power	Terminal	Resistance	Level 1	Level 2	
Part Number	Value (Ohms)	Rating (W)	Characteristic (#)	Tolerance (%)	(FRL)(&)	(FRL)(&)	Manufacturer
RBR54#61900%&	6,190	1/4	L, U	T, Q, A, B	R	P	SHA
RBR54#62600%&	6,260	1/4	L, U	T, Q, A, B	R	P	SHA
RBR54#63400%&	6,340	1/4	L, U	T, Q, A, B	R	P	SHA
RBR54#64200%&	6,420	1/4	L, U	T, Q, A, B	R	P	SHA
RBR54#64900%&	6,490	1/4	L, U	T, Q, A, B	R	P	SHA
RBR54#65700%&	6,570	1/4	L, U	T, Q, A, B	R	P	SHA
RBR54#66500%&	6,650	1/4	L, U	T, Q, A, B	R	P	SHA
RBR54#67300%&	6,730	1/4	L, U	T, Q, A, B	R	P	SHA
RBR54#68100%&	6,810	1/4	L, U	T, Q, A, B	R	P	SHA
RBR54#69000%&	6,900	1/4	L, U	T, Q, A, B	R	P	SHA
RBR54#69800%&	6,980	1/4	L, U	T, Q, A, B	R	P	SHA
RBR54#70600%&	7,060	1/4	L, U	T, Q, A, B	R	P	SHA
	Resistance	Power	Terminal	Resistance	Level 1	Level 2	
Part Number	Value (Ohms)	Rating (W)	Characteristic (#)	Tolerance (%)	(FRL)(&)	(FRL)(&)	Manufacturer
RBR54#71500%&	7,150	1/4	L, U	T, Q, A, B	R	P	SHA
RBR54#72300%&	7,230	1/4	L, U	T, Q, A, B	R	P	SHA
RBR54#73200%&	7,320	1/4	L, U	T, Q, A, B	R	P	SHA
RBR54#74100%&	7,410	1/4	L, U	T, Q, A, B	R	P	SHA
RBR54#75000%&	7,500	1/4	L, U	T, Q, A, B	R	P	SHA
RBR54#75900%&	7,590	1/4	L, U	T, Q, A, B	R	P	SHA
RBR54#76800%&	7,680	1/4	L, U	T, Q, A, B	R	P	SHA
RBR54#77700%&	7,770	1/4	L, U	T, Q, A, B	R	P	SHA
RBR54#78700%&	7,870	1/4	L, U	T, Q, A, B	R	P	SHA
RBR54#79600%&	7,960	1/4	L, U	T, Q, A, B	R	P	SHA
RBR54#80600%&	8,060	1/4	L, U	T, Q, A, B	R	P	SHA
RBR54#81600%&	8,160	1/4	L, U	T, Q, A, B	R	P	SHA
RBR54#82500%&	8,250	1/4	L, U	T, Q, A, B	R	P	SHA
RBR54#83500%&	8,350	1/4	L, U	T, Q, A, B	R	P	SHA
	Resistance	Power	Terminal	Resistance	Level 1	Level 2	

Part Number	Value (Ohms)	Rating (W)	Characteristic (#)	Tolerance (%)	(FRL)(&)	(FRL)(&)	Manufacturer
RBR54#84500%&	8,450	1/4	L, U	T, Q, A, B	R	P	SHA
RBR54#85600%&	8,560	1/4	L, U	T, Q, A, B	R	P	SHA
RBR54#86600%&	8,660	1/4	L, U	T, Q, A, B	R	P	SHA
RBR54#87600%&	8,760	1/4	L, U	T, Q, A, B	R	P	SHA
RBR54#88700%&	8,870	1/4	L, U	T, Q, A, B	R	P	SHA
RBR54#89800%&	8,980	1/4	L, U	T, Q, A, B	R	P	SHA
RBR54#90900%&	9,090	1/4	L, U	T, Q, A, B	R	P	SHA
RBR54#92000%&	9,190	1/4	L, U	T, Q, A, B	R	P	SHA
RBR54#93100%&	9,310	1/4	L, U	T, Q, A, B	R	P	SHA
RBR54#94200%&	9,420	1/4	L, U	T, Q, A, B	R	P	SHA
RBR54#95300%&	9,530	1/4	L, U	T, Q, A, B	R	P	SHA
RBR54#96500%&	9,650	1/4	L, U	T, Q, A, B	R	P	SHA
RBR54#97600%&	9,760	1/4	L, U	T, Q, A, B	R	P	SHA
RBR54#98800%&	9,880	1/4	L, U	T, Q, A, B	R	P	SHA
	Resistance	Power	Terminal	Resistance	Level 1	Level 2	
Part Number	Value (Ohms)	Rating (W)	Characteristic (#)	Tolerance (%)	(FRL)(&)	(FRL)(&)	Manufacturer

RBR54 Wirewound Resistors: 10,000 Ohms through 98,800 Ohms

	Resistance	Power	Terminal	Resistance	Level 1	Level 2	
Part Number	Value (Ohms)	Rating (W)	Characteristic (#)	Tolerance (%)	(FRL)(&)	(FRL)(&)	Manufacturer
RBR54#10001%&	10,000	1/4	L, U	T, Q, A, B	R	P	SHA
RBR54#10101%&	10,100	1/4	L, U	T, Q, A, B	R	P	SHA
RBR54#10201%&	10,200	1/4	L, U	T, Q, A, B	R	P	SHA
RBR54#10401%&	10,400	1/4	L, U	T, Q, A, B	R	P	SHA
RBR54#10501%&	10,500	1/4	L, U	T, Q, A, B	R	P	SHA
RBR54#10601%&	10,600	1/4	L, U	T, Q, A, B	R	P	SHA
RBR54#10701%&	10,700	1/4	L, U	T, Q, A, B	R	P	SHA
RBR54#10901%&	10,900	1/4	L, U	T, Q, A, B	R	P	SHA
RBR54#11001%&	11,000	1/4	L, U	T, Q, A, B	R	P	SHA
RBR54#11101%&	11,100	1/4	L, U	T, Q, A, B	R	P	SHA
RBR54#11301%&	11,300	1/4	L, U	T, Q, A, B	R	P	SHA
RBR54#11401%&	11,400	1/4	L, U	T, Q, A, B	R	P	SHA
RBR54#11501%&	11,500	1/4	L, U	T, Q, A, B	R	P	SHA
RBR54#11701%&	11,700	1/4	L, U	T, Q, A, B	R	P	SHA
	Resistance	Power	Terminal	Resistance	Level 1	Level 2	
Part Number	Value (Ohms)	Rating (W)	Characteristic (#)	Tolerance (%)	(FRL)(&)	(FRL)(&)	Manufacturer
RBR54#11801%&	11,800	1/4	L, U	T, Q, A, B	R	P	SHA
RBR54#12001%&	12,000	1/4	L, U	T, Q, A, B	R	P	SHA
RBR54#12101%&	12,100	1/4	L, U	T, Q, A, B	R	P	SHA
RBR54#12301%&	12,300	1/4	L, U	T, Q, A, B	R	P	SHA

RBR54#12401%&	12,400	1/4	L, U	T, Q, A, B	R	P	SHA
RBR54#12601%&	12,600	1/4	L, U	T, Q, A, B	R	P	SHA
RBR54#12701%&	12,700	1/4	L, U	T, Q, A, B	R	P	SHA
RBR54#12901%&	12,900	1/4	L, U	T, Q, A, B	R	P	SHA
RBR54#13001%&	13,000	1/4	L, U	T, Q, A, B	R	P	SHA
RBR54#13201%&	13,200	1/4	L, U	T, Q, A, B	R	P	SHA
RBR54#13301%&	13,300	1/4	L, U	T, Q, A, B	R	P	SHA
RBR54#13501%&	13,500	1/4	L, U	T, Q, A, B	R	P	SHA
RBR54#13701%&	13,700	1/4	L, U	T, Q, A, B	R	P	SHA
RBR54#13801%&	13,800	1/4	L, U	T, Q, A, B	R	P	SHA
	Resistance	Power	Terminal	Resistance	Level 1	Level 2	
Part Number	Value (Ohms)	Rating (W)	Characteristic (#)	Tolerance (%)	(FRL)(&)	(FRL)(&)	Manufacturer
RBR54#14001%&	14,000	1/4	L, U	T, Q, A, B	R	P	SHA
RBR54#14201%&	14,200	1/4	L, U	T, Q, A, B	R	P	SHA
RBR54#14301%&	14,300	1/4	L, U	T, Q, A, B	R	P	SHA
RBR54#14501%&	14,500	1/4	L, U	T, Q, A, B	R	P	SHA
RBR54#14701%&	14,700	1/4	L, U	T, Q, A, B	R	P	SHA
RBR54#14901%&	14,900	1/4	L, U	T, Q, A, B	R	P	SHA
RBR54#15001%&	15,000	1/4	L, U	T, Q, A, B	R	P	SHA
RBR54#15201%&	15,200	1/4	L, U	T, Q, A, B	R	P	SHA
RBR54#15401%&	15,400	1/4	L, U	T, Q, A, B	R	P	SHA
RBR54#15601%&	15,600	1/4	L, U	T, Q, A, B	R	P	SHA
RBR54#15801%&	15,800	1/4	L, U	T, Q, A, B	R	P	SHA
RBR54#16001%&	16,000	1/4	L, U	T, Q, A, B	R	P	SHA
RBR54#16201%&	16,200	1/4	L, U	T, Q, A, B	R	P	SHA
RBR54#16401%&	16,400	1/4	L, U	T, Q, A, B	R	P	SHA
	Resistance	Power	Terminal	Resistance	Level 1	Level 2	
Part Number	Value (Ohms)	Rating (W)	Characteristic (#)	Tolerance (%)	(FRL)(&)	(FRL)(&)	Manufacturer
RBR54#16501%&	16,500	1/4	L, U	T, Q, A, B	R	P	SHA
RBR54#16701%&	16,700	1/4	L, U	T, Q, A, B	R	P	SHA
RBR54#16901%&	16,900	1/4	L, U	T, Q, A, B	R	P	SHA
RBR54#17201%&	17,200	1/4	L, U	T, Q, A, B	R	P	SHA
RBR54#17401%&	17,400	1/4	L, U	T, Q, A, B	R	P	SHA
RBR54#17601%&	17,600	1/4	L, U	T, Q, A, B	R	P	SHA
RBR54#17801%&	17,800	1/4	L, U	T, Q, A, B	R	P	SHA
RBR54#18001%&	18,000	1/4	L, U	T, Q, A, B	R	P	SHA
RBR54#18201%&	18,200	1/4	L, U	T, Q, A, B	R	P	SHA
RBR54#18401%&	18,400	1/4	L, U	T, Q, A, B	R	P	SHA
RBR54#18701%&	18,700	1/4	L, U	T, Q, A, B	R	P	SHA
RBR54#18901%&	18,900	1/4	L, U	T, Q, A, B	R	P	SHA
RBR54#19101%&	19,100	1/4	L, U	T, Q, A, B	R	P	SHA
RBR54#19301%&	19,300	1/4	L, U	T, Q, A, B	R	P	SHA
	Resistance	Power	Terminal	Resistance	Level 1	Level 2	
Part Number	Value (Ohms)	Rating (W)	Characteristic (#)	Tolerance (%)	(FRL)(&)	(FRL)(&)	Manufacturer
RBR54#19601%&	19,600	1/4	L, U	T, Q, A, B	R	P	SHA
RBR54#19801%&	19,800	1/4	L, U	T, Q, A, B	R	P	SHA
RBR54#20001%&	20,000	1/4	L, U	T, Q, A, B	R	P	SHA

RBR54#20301%&	20,300	1/4	L, U	T, Q, A, B	R	P	SHA
RBR54#20501%&	20,500	1/4	L, U	T, Q, A, B	R	P	SHA
RBR54#20801%&	20,800	1/4	L, U	T, Q, A, B	R	P	SHA
RBR54#21001%&	21,000	1/4	L, U	T, Q, A, B	R	P	SHA
RBR54#21301%&	21,300	1/4	L, U	T, Q, A, B	R	P	SHA
RBR54#21501%&	21,500	1/4	L, U	T, Q, A, B	R	P	SHA
RBR54#21801%&	21,800	1/4	L, U	T, Q, A, B	R	P	SHA
RBR54#22101%&	22,100	1/4	L, U	T, Q, A, B	R	P	SHA
RBR54#22301%&	22,300	1/4	L, U	T, Q, A, B	R	P	SHA
RBR54#22601%&	22,600	1/4	L, U	T, Q, A, B	R	P	SHA
RBR54#22901%&	22,900	1/4	L, U	T, Q, A, B	R	P	SHA
	Resistance	Power	Terminal	Resistance	Level 1	Level 2	
Part Number	Value (Ohms)	Rating (W)	Characteristic (#)	Tolerance (%)	(FRL)(&)	(FRL)(&)	Manufacturer
RBR54#23201%&	23,200	1/4	L, U	T, Q, A, B	R	P	SHA
RBR54#23401%&	23,400	1/4	L, U	T, Q, A, B	R	P	SHA
RBR54#23701%&	23,700	1/4	L, U	T, Q, A, B	R	P	SHA
RBR54#24001%&	24,000	1/4	L, U	T, Q, A, B	R	P	SHA
RBR54#24301%&	24,300	1/4	L, U	T, Q, A, B	R	P	SHA
RBR54#24601%&	24,600	1/4	L, U	T, Q, A, B	R	P	SHA
RBR54#24901%&	24,900	1/4	L, U	T, Q, A, B	R	P	SHA
RBR54#25201%&	25,200	1/4	L, U	T, Q, A, B	R	P	SHA
RBR54#25501%&	25,500	1/4	L, U	T, Q, A, B	R	P	SHA
RBR54#25801%&	25,800	1/4	L, U	T, Q, A, B	R	P	SHA
RBR54#26101%&	26,100	1/4	L, U	T, Q, A, B	R	P	SHA
RBR54#26401%&	26,400	1/4	L, U	T, Q, A, B	R	P	SHA
RBR54#26701%&	26,700	1/4	L, U	T, Q, A, B	R	P	SHA
RBR54#27101%&	27,100	1/4	L, U	T, Q, A, B	R	P	SHA
	Resistance	Power	Terminal	Resistance	Level 1	Level 2	
Part Number	Value (Ohms)	Rating (W)	Characteristic (#)	Tolerance (%)	(FRL)(&)	(FRL)(&)	Manufacturer
RBR54#27401%&	27,400	1/4	L, U	T, Q, A, B	R	P	SHA
RBR54#27701%&	27,700	1/4	L, U	T, Q, A, B	R	P	SHA
RBR54#28001%&	28,000	1/4	L, U	T, Q, A, B	R	P	SHA
RBR54#28401%&	28,400	1/4	L, U	T, Q, A, B	R	P	SHA
RBR54#28701%&	28,700	1/4	L, U	T, Q, A, B	R	P	SHA
RBR54#29101%&	29,100	1/4	L, U	T, Q, A, B	R	P	SHA
RBR54#29401%&	29,400	1/4	L, U	T, Q, A, B	R	P	SHA
RBR54#29801%&	29,800	1/4	L, U	T, Q, A, B	R	P	SHA
RBR54#30101%&	30,100	1/4	L, U	T, Q, A, B	R	P	SHA
RBR54#30501%&	30,500	1/4	L, U	T, Q, A, B	R	P	SHA
RBR54#30901%&	30,900	1/4	L, U	T, Q, A, B	R	P	SHA
RBR54#31201%&	31,200	1/4	L, U	T, Q, A, B	R	P	SHA
	Resistance	Power	Terminal	Resistance	Level 1	Level 2	
Part Number	Value (Ohms)	Rating (W)	Characteristic (#)	Tolerance (%)	(FRL)(&)	(FRL)(&)	Manufacturer
RBR54#31601%&	31,600	1/4	L, U	T, Q, A, B	R	P	SHA
RBR54#32001%&	32,000	1/4	L, U	T, Q, A, B	R	P	SHA
RBR54#32401%&	32,400	1/4	L, U	T, Q, A, B	R	P	SHA
RBR54#32801%&	32,800	1/4	L, U	T, Q, A, B	R	P	SHA

RBR54#33201%&	33,200	1/4	L, U	T, Q, A, B	R	P	SHA
RBR54#33601%&	33,600	1/4	L, U	T, Q, A, B	R	P	SHA
RBR54#34001%&	34,000	1/4	L, U	T, Q, A, B	R	P	SHA
RBR54#34401%&	34,400	1/4	L, U	T, Q, A, B	R	P	SHA
RBR54#34801%&	34,800	1/4	L, U	T, Q, A, B	R	P	SHA
RBR54#35201%&	35,200	1/4	L, U	T, Q, A, B	R	P	SHA
RBR54#35701%&	35,700	1/4	L, U	T, Q, A, B	R	P	SHA
RBR54#36101%&	36,100	1/4	L, U	T, Q, A, B	R	P	SHA
RBR54#36501%&	36,500	1/4	L, U	T, Q, A, B	R	P	SHA
RBR54#37001%&	37,000	1/4	L, U	T, Q, A, B	R	P	SHA
	Resistance	Power	Terminal	Resistance	Level 1	Level 2	
Part Number	Value (Ohms)	Rating (W)	Characteristic (#)	Tolerance (%)	(FRL)(&)	(FRL)(&)	Manufacturer
RBR54#37401%&	37,400	1/4	L, U	T, Q, A, B	R	P	SHA
RBR54#37901%&	37,900	1/4	L, U	T, Q, A, B	R	P	SHA
RBR54#38301%&	38,300	1/4	L, U	T, Q, A, B	R	P	SHA
RBR54#38801%&	38,800	1/4	L, U	T, Q, A, B	R	P	SHA
RBR54#39201%&	39,200	1/4	L, U	T, Q, A, B	R	P	SHA
RBR54#39701%&	39,700	1/4	L, U	T, Q, A, B	R	P	SHA
RBR54#40201%&	40,200	1/4	L, U	T, Q, A, B	R	P	SHA
RBR54#40701%&	40,700	1/4	L, U	T, Q, A, B	R	P	SHA
RBR54#41201%&	41,200	1/4	L, U	T, Q, A, B	R	P	SHA
RBR54#41701%&	41,700	1/4	L, U	T, Q, A, B	R	P	SHA
RBR54#42201%&	42,200	1/4	L, U	T, Q, A, B	R	P	SHA
RBR54#42701%&	42,700	1/4	L, U	T, Q, A, B	R	P	SHA
RBR54#43201%&	43,200	1/4	L, U	T, Q, A, B	R	P	SHA
RBR54#43701%&	43,700	1/4	L, U	T, Q, A, B	R	P	SHA
	Resistance	Power	Terminal	Resistance	Level 1	Level 2	
Part Number	Value (Ohms)	Rating (W)	Characteristic (#)	Tolerance (%)	(FRL)(&)	(FRL)(&)	Manufacturer
RBR54#44201%&	44,200	1/4	L, U	T, Q, A, B	R	P	SHA
RBR54#44801%&	44,800	1/4	L, U	T, Q, A, B	R	P	SHA
RBR54#45301%&	45,300	1/4	L, U	T, Q, A, B	R	P	SHA
RBR54#45901%&	45,900	1/4	L, U	T, Q, A, B	R	P	SHA
RBR54#46401%&	46,400	1/4	L, U	T, Q, A, B	R	P	SHA
RBR54#47001%&	47,000	1/4	L, U	T, Q, A, B	R	P	SHA
RBR54#47501%&	47,500	1/4	L, U	T, Q, A, B	R	P	SHA
RBR54#48101%&	48,100	1/4	L, U	T, Q, A, B	R	P	SHA
RBR54#48701%&	48,700	1/4	L, U	T, Q, A, B	R	P	SHA
RBR54#49301%&	49,300	1/4	L, U	T, Q, A, B	R	P	SHA
RBR54#49901%&	49,900	1/4	L, U	T, Q, A, B	R	P	SHA
RBR54#50501%&	50,500	1/4	L, U	T, Q, A, B	R	P	SHA
RBR54#51101%&	51,100	1/4	L, U	T, Q, A, B	R	P	SHA
RBR54#51701%&	51,700	1/4	L, U	T, Q, A, B	R	P	SHA
	Resistance	Power	Terminal	Resistance	Level 1	Level 2	
Part Number	Value (Ohms)	Rating (W)	Characteristic (#)	Tolerance (%)	(FRL)(&)	(FRL)(&)	Manufacturer
RBR54#52301%&	52,300	1/4	L, U	T, Q, A, B	R	P	SHA
RBR54#53001%&	53,000	1/4	L, U	T, Q, A, B	R	P	SHA
RBR54#53601%&	53,600	1/4	L, U	T, Q, A, B	R	P	SHA

RBR54#54201%&	54,200	1/4	L, U	T, Q, A, B	R	P	SHA
RBR54#54901%&	54,900	1/4	L, U	T, Q, A, B	R	P	SHA
RBR54#55601%&	55,600	1/4	L, U	T, Q, A, B	R	P	SHA
RBR54#56201%&	56,200	1/4	L, U	T, Q, A, B	R	P	SHA
RBR54#56901%&	56,900	1/4	L, U	T, Q, A, B	R	P	SHA
RBR54#57601%&	57,600	1/4	L, U	T, Q, A, B	R	P	SHA
RBR54#58301%&	58,300	1/4	L, U	T, Q, A, B	R	P	SHA
RBR54#59001%&	59,000	1/4	L, U	T, Q, A, B	R	P	SHA
RBR54#59701%&	59,700	1/4	L, U	T, Q, A, B	R	P	SHA
RBR54#60401%&	60,400	1/4	L, U	T, Q, A, B	R	P	SHA
RBR54#61201%&	61,200	1/4	L, U	T, Q, A, B	R	P	SHA
	Resistance	Power	Terminal	Resistance	Level 1	Level 2	
Part Number	Value (Ohms)	Rating (W)	Characteristic (#)	Tolerance (%)	(FRL)(&)	(FRL)(&)	Manufacturer
RBR54#61901%&	61,900	1/4	L, U	T, Q, A, B	R	P	SHA
RBR54#62601%&	62,600	1/4	L, U	T, Q, A, B	R	P	SHA
RBR54#63401%&	63,400	1/4	L, U	T, Q, A, B	R	P	SHA
RBR54#64201%&	64,200	1/4	L, U	T, Q, A, B	R	P	SHA
RBR54#64901%&	64,900	1/4	L, U	T, Q, A, B	R	P	SHA
RBR54#65701%&	65,700	1/4	L, U	T, Q, A, B	R	P	SHA
RBR54#66501%&	66,500	1/4	L, U	T, Q, A, B	R	P	SHA
RBR54#67301%&	67,300	1/4	L, U	T, Q, A, B	R	P	SHA
RBR54#68101%&	68,100	1/4	L, U	T, Q, A, B	R	P	SHA
RBR54#69001%&	69,000	1/4	L, U	T, Q, A, B	R	P	SHA
RBR54#69801%&	69,800	1/4	L, U	T, Q, A, B	R	P	SHA
RBR54#70601%&	70,600	1/4	L, U	T, Q, A, B	R	P	SHA
	Resistance	Power	Terminal	Resistance	Level 1	Level 2	
Part Number	Value (Ohms)	Rating (W)	Characteristic (#)	Tolerance (%)	(FRL)(&)	(FRL)(&)	Manufacturer
RBR54#71501%&	71,500	1/4	L, U	T, Q, A, B	R	P	SHA
RBR54#72301%&	72,300	1/4	L, U	T, Q, A, B	R	P	SHA
RBR54#73201%&	73,200	1/4	L, U	T, Q, A, B	R	P	SHA
RBR54#74101%&	74,100	1/4	L, U	T, Q, A, B	R	P	SHA
RBR54#75001%&	75,000	1/4	L, U	T, Q, A, B	R	P	SHA
RBR54#75901%&	75,900	1/4	L, U	T, Q, A, B	R	P	SHA
RBR54#76802%&	76,800	1/4	L, U	T, Q, A, B	R	P	SHA
RBR54#77702%&	77,700	1/4	L, U	T, Q, A, B	R	P	SHA
RBR54#78702%&	78,700	1/4	L, U	T, Q, A, B	R	P	SHA
RBR54#79602%&	79,600	1/4	L, U	T, Q, A, B	R	P	SHA
RBR54#80602%&	80,600	1/4	L, U	T, Q, A, B	R	P	SHA
RBR54#81602%&	81,600	1/4	L, U	T, Q, A, B	R	P	SHA
RBR54#82502%&	82,500	1/4	L, U	T, Q, A, B	R	P	SHA
RBR54#83502%&	83,500	1/4	L, U	T, Q, A, B	R	P	SHA
	Resistance	Power	Terminal	Resistance	Level 1	Level 2	
Part Number	Value (Ohms)	Rating (W)	Characteristic (#)	Tolerance (%)	(FRL)(&)	(FRL)(&)	Manufacturer
RBR54#84502%&	84,500	1/4	L, U	T, Q, A, B	R	P	SHA
RBR54#85602%&	85,600	1/4	L, U	T, Q, A, B	R	P	SHA
RBR54#86602%&	86,600	1/4	L, U	T, Q, A, B	R	P	SHA
RBR54#87602%&	87,600	1/4	L, U	T, Q, A, B	R	P	SHA

RBR54#88702%&	88,700	1/4	L, U	T, Q, A, B	R	P	SHA
RBR54#89802%&	89,800	1/4	L, U	T, Q, A, B	R	P	SHA
RBR54#90902%&	90,900	1/4	L, U	T, Q, A, B	R	P	SHA
RBR54#92002%&	92,000	1/4	L, U	T, Q, A, B	R	P	SHA
RBR54#93102%&	93,100	1/4	L, U	T, Q, A, B	R	P	SHA
RBR54#94202%&	94,200	1/4	L, U	T, Q, A, B	R	P	SHA
RBR54#95302%&	95,300	1/4	L, U	T, Q, A, B	R	P	SHA
RBR54#96502%&	96,500	1/4	L, U	T, Q, A, B	R	P	SHA
RBR54#97602%&	97,600	1/4	L, U	T, Q, A, B	R	P	SHA
RBR54#98802%&	98,800	1/4	L, U	T, Q, A, B	R	P	SHA
	Resistance	Power	Terminal	Resistance	Level 1	Level 2	
Part Number	Value (Ohms)	Rating (W)	Characteristic (#)	Tolerance (%)	(FRL)(&)	(FRL)(&)	Manufacturer

RBR54 Wirewound Resistors: 100,000 Ohms through 562,000 Ohms

	Resistance	Power	Terminal	Resistance	Level 1	Level 2	
Part Number	Value (Ohms)	Rating (W)	Characteristic (#)	Tolerance (%)	(FRL)(&)	(FRL)(&)	Manufacturer
RBR54#10002%&	100,000	1/4	L, U	T, Q, A, B	R	P	SHA
RBR54#10102%&	101,000	1/4	L, U	T, Q, A, B	R	P	SHA
RBR54#10202%&	102,000	1/4	L, U	T, Q, A, B	R	P	SHA
RBR54#10402%&	104,000	1/4	L, U	T, Q, A, B	R	P	SHA
RBR54#10502%&	105,000	1/4	L, U	T, Q, A, B	R	P	SHA
RBR54#10602%&	106,000	1/4	L, U	T, Q, A, B	R	P	SHA
RBR54#10702%&	107,000	1/4	L, U	T, Q, A, B	R	P	SHA
RBR54#10902%&	109,000	1/4	L, U	T, Q, A, B	R	P	SHA
RBR54#11002%&	110,000	1/4	L, U	T, Q, A, B	R	P	SHA
RBR54#11102%&	111,000	1/4	L, U	T, Q, A, B	R	P	SHA
RBR54#11302%&	113,000	1/4	L, U	T, Q, A, B	R	P	SHA
RBR54#11402%&	114,000	1/4	L, U	T, Q, A, B	R	P	SHA
RBR54#11502%&	115,000	1/4	L, U	T, Q, A, B	R	P	SHA
RBR54#11702%&	117,000	1/4	L, U	T, Q, A, B	R	P	SHA
	Resistance	Power	Terminal	Resistance	Level 1	Level 2	
Part Number	Value (Ohms)	Rating (W)	Characteristic (#)	Tolerance (%)	(FRL)(&)	(FRL)(&)	Manufacturer
RBR54#11802%&	118,000	1/4	L, U	T, Q, A, B	R	P	SHA
RBR54#12002%&	120,000	1/4	L, U	T, Q, A, B	R	P	SHA
RBR54#12102%&	121,000	1/4	L, U	T, Q, A, B	R	P	SHA
RBR54#12302%&	123,000	1/4	L, U	T, Q, A, B	R	P	SHA
RBR54#12402%&	124,000	1/4	L, U	T, Q, A, B	R	P	SHA
RBR54#12602%&	126,000	1/4	L, U	T, Q, A, B	R	P	SHA
RBR54#12702%&	127,000	1/4	L, U	T, Q, A, B	R	P	SHA
RBR54#12902%&	129,000	1/4	L, U	T, Q, A, B	R	P	SHA
RBR54#13002%&	130,000	1/4	L, U	T, Q, A, B	R	P	SHA
RBR54#13202%&	132,000	1/4	L, U	T, Q, A, B	R	P	SHA
RBR54#13302%&	133,000	1/4	L, U	T, Q, A, B	R	P	SHA
RBR54#13502%&	135,000	1/4	L, U	T, Q, A, B	R	P	SHA

RBR54#13702%&	137,000	1/4	L, U	T, Q, A, B	R	P	SHA
RBR54#13802%&	138,000	1/4	L, U	T, Q, A, B	R	P	SHA
	Resistance	Power	Terminal	Resistance	Level 1	Level 2	
Part Number	Value (Ohms)	Rating (W)	Characteristic (#)	Tolerance (%)	(FRL)(&)	(FRL)(&)	Manufacturer
RBR54#14002%&	140,000	1/4	L, U	T, Q, A, B	R	P	SHA
RBR54#14202%&	142,000	1/4	L, U	T, Q, A, B	R	P	SHA
RBR54#14302%&	143,000	1/4	L, U	T, Q, A, B	R	P	SHA
RBR54#14502%&	145,000	1/4	L, U	T, Q, A, B	R	P	SHA
RBR54#14702%&	147,000	1/4	L, U	T, Q, A, B	R	P	SHA
RBR54#14902%&	149,000	1/4	L, U	T, Q, A, B	R	P	SHA
RBR54#15002%&	150,000	1/4	L, U	T, Q, A, B	R	P	SHA
RBR54#15202%&	152,000	1/4	L, U	T, Q, A, B	R	P	SHA
RBR54#15402%&	154,000	1/4	L, U	T, Q, A, B	R	P	SHA
RBR54#15602%&	156,000	1/4	L, U	T, Q, A, B	R	P	SHA
RBR54#15802%&	158,000	1/4	L, U	T, Q, A, B	R	P	SHA
RBR54#16002%&	160,000	1/4	L, U	T, Q, A, B	R	P	SHA
RBR54#16202%&	162,000	1/4	L, U	T, Q, A, B	R	P	SHA
RBR54#16402%&	164,000	1/4	L, U	T, Q, A, B	R	P	SHA
	Resistance	Power	Terminal	Resistance	Level 1	Level 2	
Part Number	Value (Ohms)	Rating (W)	Characteristic (#)	Tolerance (%)	(FRL)(&)	(FRL)(&)	Manufacturer
RBR54#16502%&	165,000	1/4	L, U	T, Q, A, B	R	P	SHA
RBR54#16702%&	167,000	1/4	L, U	T, Q, A, B	R	P	SHA
RBR54#16902%&	169,000	1/4	L, U	T, Q, A, B	R	P	SHA
RBR54#17202%&	172,000	1/4	L, U	T, Q, A, B	R	P	SHA
RBR54#17402%&	174,000	1/4	L, U	T, Q, A, B	R	P	SHA
RBR54#17602%&	176,000	1/4	L, U	T, Q, A, B	R	P	SHA
RBR54#17802%&	178,000	1/4	L, U	T, Q, A, B	R	P	SHA
RBR54#18002%&	180,000	1/4	L, U	T, Q, A, B	R	P	SHA
RBR54#18202%&	182,000	1/4	L, U	T, Q, A, B	R	P	SHA
RBR54#18402%&	184,000	1/4	L, U	T, Q, A, B	R	P	SHA
RBR54#18702%&	187,000	1/4	L, U	T, Q, A, B	R	P	SHA
RBR54#18902%&	189,000	1/4	L, U	T, Q, A, B	R	P	SHA
RBR54#19102%&	191,000	1/4	L, U	T, Q, A, B	R	P	SHA
RBR54#19302%&	193,000	1/4	L, U	T, Q, A, B	R	P	SHA
	Resistance	Power	Terminal	Resistance	Level 1	Level 2	
Part Number	Value (Ohms)	Rating (W)	Characteristic (#)	Tolerance (%)	(FRL)(&)	(FRL)(&)	Manufacturer
RBR54#19602%&	196,000	1/4	L, U	T, Q, A, B	R	P	SHA
RBR54#19802%&	198,000	1/4	L, U	T, Q, A, B	R	P	SHA
RBR54#20002%&	200,000	1/4	L, U	T, Q, A, B	R	P	SHA
RBR54#20302%&	203,000	1/4	L, U	T, Q, A, B	R	P	SHA
RBR54#20502%&	205,000	1/4	L, U	T, Q, A, B	R	P	SHA
RBR54#20802%&	208,000	1/4	L, U	T, Q, A, B	R	P	SHA
RBR54#21002%&	210,000	1/4	L, U	T, Q, A, B	R	P	SHA
RBR54#21302%&	213,000	1/4	L, U	T, Q, A, B	R	P	SHA
RBR54#21502%&	215,000	1/4	L, U	T, Q, A, B	R	P	SHA
RBR54#21802%&	218,000	1/4	L, U	T, Q, A, B	R	P	SHA
RBR54#22102%&	221,000	1/4	L, U	T, Q, A, B	R	P	SHA

RBR54#22302%&	223,000	1/4	L, U	T, Q, A, B	R	P	SHA
RBR54#22602%&	226,000	1/4	L, U	T, Q, A, B	R	P	SHA
RBR54#22902%&	229,000	1/4	L, U	T, Q, A, B	R	P	SHA
	Resistance	Power	Terminal	Resistance	Level 1	Level 2	
Part Number	Value (Ohms)	Rating (W)	Characteristic (#)	Tolerance (%)	(FRL)(&)	(FRL)(&)	Manufacturer
RBR54#23202%&	232,000	1/4	L, U	T, Q, A, B	R	P	SHA
RBR54#23402%&	234,000	1/4	L, U	T, Q, A, B	R	P	SHA
RBR54#23702%&	237,000	1/4	L, U	T, Q, A, B	R	P	SHA
RBR54#24002%&	240,000	1/4	L, U	T, Q, A, B	R	P	SHA
RBR54#24302%&	243,000	1/4	L, U	T, Q, A, B	R	P	SHA
RBR54#24602%&	246,000	1/4	L, U	T, Q, A, B	R	P	SHA
RBR54#24902%&	249,000	1/4	L, U	T, Q, A, B	R	P	SHA
RBR54#25202%&	252,000	1/4	L, U	T, Q, A, B	R	P	SHA
RBR54#25502%&	255,000	1/4	L, U	T, Q, A, B	R	P	SHA
RBR54#25802%&	258,000	1/4	L, U	T, Q, A, B	R	P	SHA
RBR54#26102%&	261,000	1/4	L, U	T, Q, A, B	R	P	SHA
RBR54#26402%&	264,000	1/4	L, U	T, Q, A, B	R	P	SHA
RBR54#26702%&	267,000	1/4	L, U	T, Q, A, B	R	P	SHA
RBR54#27102%&	271,000	1/4	L, U	T, Q, A, B	R	P	SHA
	Resistance	Power	Terminal	Resistance	Level 1	Level 2	
Part Number	Value (Ohms)	Rating (W)	Characteristic (#)	Tolerance (%)	(FRL)(&)	(FRL)(&)	Manufacturer
RBR54#27402%&	274,000	1/4	L, U	T, Q, A, B	R	P	SHA
RBR54#27702%&	277,000	1/4	L, U	T, Q, A, B	R	P	SHA
RBR54#28002%&	280,000	1/4	L, U	T, Q, A, B	R	P	SHA
RBR54#28402%&	284,000	1/4	L, U	T, Q, A, B	R	P	SHA
RBR54#28702%&	287,000	1/4	L, U	T, Q, A, B	R	P	SHA
RBR54#29102%&	291,000	1/4	L, U	T, Q, A, B	R	P	SHA
RBR54#29402%&	294,000	1/4	L, U	T, Q, A, B	R	P	SHA
RBR54#29802%&	298,000	1/4	L, U	T, Q, A, B	R	P	SHA
RBR54#30102%&	301,000	1/4	L, U	T, Q, A, B	R	P	SHA
RBR54#30502%&	305,000	1/4	L, U	T, Q, A, B	R	P	SHA
RBR54#30902%&	309,000	1/4	L, U	T, Q, A, B	R	P	SHA
RBR54#31202%&	312,000	1/4	L, U	T, Q, A, B	R	P	SHA
	Resistance	Power	Terminal	Resistance	Level 1	Level 2	
Part Number	Value (Ohms)	Rating (W)	Characteristic (#)	Tolerance (%)	(FRL)(&)	(FRL)(&)	Manufacturer
RBR54#31602%&	316,000	1/4	L, U	T, Q, A, B	R	P	SHA
RBR54#32002%&	320,000	1/4	L, U	T, Q, A, B	R	P	SHA
RBR54#32402%&	324,000	1/4	L, U	T, Q, A, B	R	P	SHA
RBR54#32802%&	328,000	1/4	L, U	T, Q, A, B	R	P	SHA
RBR54#33202%&	332,000	1/4	L, U	T, Q, A, B	R	P	SHA
RBR54#33602%&	336,000	1/4	L, U	T, Q, A, B	R	P	SHA
RBR54#34002%&	340,000	1/4	L, U	T, Q, A, B	R	P	SHA
RBR54#34402%&	344,000	1/4	L, U	T, Q, A, B	R	P	SHA
RBR54#34802%&	348,000	1/4	L, U	T, Q, A, B	R	P	SHA
RBR54#35202%&	352,000	1/4	L, U	T, Q, A, B	R	P	SHA
RBR54#35702%&	357,000	1/4	L, U	T, Q, A, B	R	P	SHA
RBR54#36102%&	361,000	1/4	L, U	T, Q, A, B	R	P	SHA

RBR54#36502%&	365,000	1/4	L, U	T, Q, A, B	R	P	SHA
RBR54#37002%&	370,000	1/4	L, U	T, Q, A, B	R	P	SHA
	Resistance	Power	Terminal	Resistance	Level 1	Level 2	
Part Number	Value (Ohms)	Rating (W)	Characteristic (#)	Tolerance (%)	(FRL)(&)	(FRL)(&)	Manufacturer
RBR54#37402%&	374,000	1/4	L, U	T, Q, A, B	R	P	SHA
RBR54#37902%&	379,000	1/4	L, U	T, Q, A, B	R	P	SHA
RBR54#38302%&	383,000	1/4	L, U	T, Q, A, B	R	P	SHA
RBR54#38802%&	388,000	1/4	L, U	T, Q, A, B	R	P	SHA
RBR54#39202%&	392,000	1/4	L, U	T, Q, A, B	R	P	SHA
RBR54#39702%&	397,000	1/4	L, U	T, Q, A, B	R	P	SHA
RBR54#40202%&	402,000	1/4	L, U	T, Q, A, B	R	P	SHA
RBR54#40702%&	407,000	1/4	L, U	T, Q, A, B	R	P	SHA
RBR54#41202%&	412,000	1/4	L, U	T, Q, A, B	R	P	SHA
RBR54#41702%&	417,000	1/4	L, U	T, Q, A, B	R	P	SHA
RBR54#42202%&	422,000	1/4	L, U	T, Q, A, B	R	P	SHA
RBR54#42702%&	427,000	1/4	L, U	T, Q, A, B	R	P	SHA
RBR54#43202%&	432,000	1/4	L, U	T, Q, A, B	R	P	SHA
RBR54#43702%&	437,000	1/4	L, U	T, Q, A, B	R	P	SHA
	Resistance	Power	Terminal	Resistance	Level 1	Level 2	
Part Number	Value (Ohms)	Rating (W)	Characteristic (#)	Tolerance (%)	(FRL)(&)	(FRL)(&)	Manufacturer
RBR54#44202%&	442,000	1/4	L, U	T, Q, A, B	R	P	SHA
RBR54#44802%&	448,000	1/4	L, U	T, Q, A, B	R	P	SHA
RBR54#45302%&	453,000	1/4	L, U	T, Q, A, B	R	P	SHA
RBR54#45902%&	459,000	1/4	L, U	T, Q, A, B	R	P	SHA
RBR54#46402%&	464,000	1/4	L, U	T, Q, A, B	R	P	SHA
RBR54#47002%&	470,000	1/4	L, U	T, Q, A, B	R	P	SHA
RBR54#47502%&	475,000	1/4	L, U	T, Q, A, B	R	P	SHA
RBR54#48102%&	481,000	1/4	L, U	T, Q, A, B	R	P	SHA
RBR54#48702%&	487,000	1/4	L, U	T, Q, A, B	R	P	SHA
RBR54#49302%&	493,000	1/4	L, U	T, Q, A, B	R	P	SHA
RBR54#49902%&	499,000	1/4	L, U	T, Q, A, B	R	P	SHA
RBR54#50502%&	505,000	1/4	L, U	T, Q, A, B	R	P	SHA
RBR54#51102%&	511,000	1/4	L, U	T, Q, A, B	R	P	SHA
RBR54#51702%&	517,000	1/4	L, U	T, Q, A, B	R	P	SHA
	Resistance	Power	Terminal	Resistance	Level 1	Level 2	
Part Number	Value (Ohms)	Rating (W)	Characteristic (#)	Tolerance (%)	(FRL)(&)	(FRL)(&)	Manufacturer
RBR54#52302%&	523,000	1/4	L, U	T, Q, A, B	R	P	SHA
RBR54#53002%&	530,000	1/4	L, U	T, Q, A, B	R	P	SHA
RBR54#53602%&	536,000	1/4	L, U	T, Q, A, B	R	P	SHA
RBR54#54202%&	542,000	1/4	L, U	T, Q, A, B	R	P	SHA
RBR54#54902%&	549,000	1/4	L, U	T, Q, A, B	R	P	SHA
RBR54#55602%&	556,000	1/4	L, U	T, Q, A, B	R	P	SHA
RBR54#56202%&	562,000	1/4	L, U	T, Q, A, B	R	P	SHA
	Resistance	Power	Terminal	Resistance	Level 1	Level 2	
Part Number	Value (Ohms)	Rating (W)	Characteristic (#)	Tolerance (%)	(FRL)(&)	(FRL)(&)	Manufacturer

Part Number	Resistance Value (Ohms)	Power Rating (W)	Terminal Characteristic (#)	Resistance Tolerance (%)	Level 1 (FRL)(&)	Level 2 (FRL)(&)	Manufacturer
RBR56%10R00#&	10.00	1/8	L, U	T, Q, A, B	R	P	SHA, ULT
RBR56%10R10#&	10.10	1/8	L, U	T, Q, A, B	R	P	SHA, ULT
RBR56%10R20#&	10.20	1/8	L, U	T, Q, A, B	R	P	SHA, ULT
RBR56%10R40#&	10.40	1/8	L, U	T, Q, A, B	R	P	SHA, ULT
RBR56%10R50#&	10.50	1/8	L, U	T, Q, A, B	R	P	SHA, ULT
RBR56%10R60#&	10.60	1/8	L, U	T, Q, A, B	R	P	SHA, ULT
RBR56%10R70#&	10.70	1/8	L, U	T, Q, A, B	R	P	SHA, ULT
RBR56%10R90#&	10.90	1/8	L, U	T, Q, A, B	R	P	SHA, ULT
RBR56%11R00#&	11.00	1/8	L, U	T, Q, A, B	R	P	SHA, ULT
RBR56%11R10#&	11.10	1/8	L, U	T, Q, A, B	R	P	SHA, ULT
RBR56%11R30#&	11.30	1/8	L, U	T, Q, A, B	R	P	SHA, ULT
RBR56%11R40#&	11.40	1/8	L, U	T, Q, A, B	R	P	SHA, ULT
RBR56%11R50#&	11.50	1/8	L, U	T, Q, A, B	R	P	SHA, ULT
RBR56%11R70#&	11.70	1/8	L, U	T, Q, A, B	R	P	SHA, ULT
RBR56%11R80#&	11.80	1/8	L, U	T, Q, A, B	R	P	SHA, ULT
RBR56%12R00#&	12.00	1/8	L, U	T, Q, A, B	R	P	SHA, ULT
RBR56%12R10#&	12.10	1/8	L, U	T, Q, A, B	R	P	SHA, ULT
RBR56%12R30#&	12.30	1/8	L, U	T, Q, A, B	R	P	SHA, ULT
RBR56%12R40#&	12.40	1/8	L, U	T, Q, A, B	R	P	SHA, ULT
RBR56%12R60#&	12.60	1/8	L, U	T, Q, A, B	R	P	SHA, ULT
RBR56%12R70#&	12.70	1/8	L, U	T, Q, A, B	R	P	SHA, ULT
RBR56%12R90#&	12.90	1/8	L, U	T, Q, A, B	R	P	SHA, ULT
RBR56%13R00#&	13.00	1/8	L, U	T, Q, A, B	R	P	SHA, ULT
RBR56%13R20#&	13.20	1/8	L, U	T, Q, A, B	R	P	SHA, ULT
RBR56%13R30#&	13.30	1/8	L, U	T, Q, A, B	R	P	SHA, ULT
RBR56%13R50#&	13.50	1/8	L, U	T, Q, A, B	R	P	SHA, ULT
RBR56%13R70#&	13.70	1/8	L, U	T, Q, A, B	R	P	SHA, ULT
RBR56%13R80#&	13.80	1/8	L, U	T, Q, A, B	R	P	SHA, ULT
RBR56%14R00#&	14.00	1/8	L, U	T, Q, A, B	R	P	SHA, ULT
RBR56%14R20#&	14.20	1/8	L, U	T, Q, A, B	R	P	SHA, ULT
RBR56%14R30#&	14.30	1/8	L, U	T, Q, A, B	R	P	SHA, ULT
RBR56%14R50#&	14.50	1/8	L, U	T, Q, A, B	R	P	SHA, ULT
RBR56%14R70#&	14.70	1/8	L, U	T, Q, A, B	R	P	SHA, ULT
RBR56%14R90#&	14.90	1/8	L, U	T, Q, A, B	R	P	SHA, ULT
RBR56%15R00#&	15.00	1/8	L, U	T, Q, A, B	R	P	SHA, ULT
RBR56%15R20#&	15.20	1/8	L, U	T, Q, A, B	R	P	SHA, ULT
RBR56%15R40#&	15.40	1/8	L, U	T, Q, A, B	R	P	SHA, ULT
RBR56%15R60#&	15.60	1/8	L, U	T, Q, A, B	R	P	SHA, ULT
RBR56%15R80#&	15.80	1/8	L, U	T, Q, A, B	R	P	SHA, ULT
RBR56%16R00#&	16.00	1/8	L, U	T, Q, A, B	R	P	SHA, ULT
RBR56%16R20#&	16.20	1/8	L, U	T, Q, A, B	R	P	SHA, ULT
RBR56%16R40#&	16.40	1/8	L, U	T, Q, A, B	R	P	SHA, ULT

RBR56%16R50#&	16.50	1/8	L, U	T, Q, A, B	R	P	SHA, ULT
RBR56%16R70#&	16.70	1/8	L, U	T, Q, A, B	R	P	SHA, ULT
RBR56%16R90#&	16.90	1/8	L, U	T, Q, A, B	R	P	SHA, ULT
RBR56%17R20#&	17.20	1/8	L, U	T, Q, A, B	R	P	SHA, ULT
RBR56%17R40#&	17.40	1/8	L, U	T, Q, A, B	R	P	SHA, ULT
RBR56%17R60#&	17.60	1/8	L, U	T, Q, A, B	R	P	SHA, ULT
RBR56%17R80#&	17.80	1/8	L, U	T, Q, A, B	R	P	SHA, ULT
RBR56%18R00#&	18.00	1/8	L, U	T, Q, A, B	R	P	SHA, ULT
RBR56%18R20#&	18.20	1/8	L, U	T, Q, A, B	R	P	SHA, ULT
RBR56%18R40#&	18.40	1/8	L, U	T, Q, A, B	R	P	SHA, ULT
RBR56%18R70#&	18.70	1/8	L, U	T, Q, A, B	R	P	SHA, ULT
RBR56%18R90#&	18.90	1/8	L, U	T, Q, A, B	R	P	SHA, ULT
RBR56%19R10#&	19.10	1/8	L, U	T, Q, A, B	R	P	SHA, ULT
RBR56%19R30#&	19.30	1/8	L, U	T, Q, A, B	R	P	SHA, ULT
RBR56%19R60#&	19.60	1/8	L, U	T, Q, A, B	R	P	SHA, ULT
RBR56%19R80#&	19.80	1/8	L, U	T, Q, A, B	R	P	SHA, ULT
RBR56%20R00#&	20.00	1/8	L, U	T, Q, A, B	R	P	SHA, ULT
RBR56%20R30#&	20.30	1/8	L, U	T, Q, A, B	R	P	SHA, ULT
RBR56%20R50#&	20.50	1/8	L, U	T, Q, A, B	R	P	SHA, ULT
RBR56%20R80#&	20.80	1/8	L, U	T, Q, A, B	R	P	SHA, ULT
RBR56%21R00#&	21.00	1/8	L, U	T, Q, A, B	R	P	SHA, ULT
RBR56%21R30#&	21.30	1/8	L, U	T, Q, A, B	R	P	SHA, ULT
RBR56%21R50#&	21.50	1/8	L, U	T, Q, A, B	R	P	SHA, ULT
RBR56%21R80#&	21.80	1/8	L, U	T, Q, A, B	R	P	SHA, ULT
RBR56%22R10#&	22.10	1/8	L, U	T, Q, A, B	R	P	SHA, ULT
RBR56%22R30#&	22.30	1/8	L, U	T, Q, A, B	R	P	SHA, ULT
RBR56%22R60#&	22.60	1/8	L, U	T, Q, A, B	R	P	SHA, ULT
RBR56%22R90#&	22.90	1/8	L, U	T, Q, A, B	R	P	SHA, ULT
RBR56%23R20#&	23.20	1/8	L, U	T, Q, A, B	R	P	SHA, ULT
RBR56%23R40#&	23.40	1/8	L, U	T, Q, A, B	R	P	SHA, ULT
RBR56%23R70#&	23.70	1/8	L, U	T, Q, A, B	R	P	SHA, ULT
RBR56%24R00#&	24.00	1/8	L, U	T, Q, A, B	R	P	SHA, ULT
RBR56%24R30#&	24.30	1/8	L, U	T, Q, A, B	R	P	SHA, ULT
RBR56%24R60#&	24.60	1/8	L, U	T, Q, A, B	R	P	SHA, ULT
RBR56%24R90#&	24.90	1/8	L, U	T, Q, A, B	R	P	SHA, ULT
RBR56%25R20#&	25.20	1/8	L, U	T, Q, A, B	R	P	SHA, ULT
RBR56%25R50#&	25.50	1/8	L, U	T, Q, A, B	R	P	SHA, ULT
RBR56%25R80#&	25.80	1/8	L, U	T, Q, A, B	R	P	SHA, ULT
RBR56%26R10#&	26.10	1/8	L, U	T, Q, A, B	R	P	SHA, ULT
RBR56%26R40#&	26.40	1/8	L, U	T, Q, A, B	R	P	SHA, ULT
RBR56%26R70#&	26.70	1/8	L, U	T, Q, A, B	R	P	SHA, ULT
RBR56%27R10#&	27.10	1/8	L, U	T, Q, A, B	R	P	SHA, ULT
RBR56%27R40#&	27.40	1/8	L, U	T, Q, A, B	R	P	SHA, ULT
RBR56%27R70#&	27.70	1/8	L, U	T, Q, A, B	R	P	SHA, ULT
RBR56%28R00#&	28.00	1/8	L, U	T, Q, A, B	R	P	SHA, ULT
RBR56%28R40#&	28.40	1/8	L, U	T, Q, A, B	R	P	SHA, ULT
RBR56%28R70#&	28.70	1/8	L, U	T, Q, A, B	R	P	SHA, ULT

RBR56%29R10#&	29.10	1/8	L, U	T, Q, A, B	R	P	SHA, ULT
RBR56%29R40#&	29.40	1/8	L, U	T, Q, A, B	R	P	SHA, ULT
RBR56%29R80#&	29.80	1/8	L, U	T, Q, A, B	R	P	SHA, ULT
RBR56%30R10#&	30.10	1/8	L, U	T, Q, A, B	R	P	SHA, ULT
RBR56%30R50#&	30.50	1/8	L, U	T, Q, A, B	R	P	SHA, ULT
RBR56%30R90#&	30.90	1/8	L, U	T, Q, A, B	R	P	SHA, ULT
RBR56%31R20#&	31.20	1/8	L, U	T, Q, A, B	R	P	SHA, ULT
RBR56%31R60#&	31.60	1/8	L, U	T, Q, A, B	R	P	SHA, ULT
RBR56%32R00#&	32.00	1/8	L, U	T, Q, A, B	R	P	SHA, ULT
RBR56%32R40#&	32.40	1/8	L, U	T, Q, A, B	R	P	SHA, ULT
RBR56%32R80#&	32.80	1/8	L, U	T, Q, A, B	R	P	SHA, ULT
RBR56%33R20#&	33.20	1/8	L, U	T, Q, A, B	R	P	SHA, ULT
RBR56%33R60#&	33.60	1/8	L, U	T, Q, A, B	R	P	SHA, ULT
RBR56%34R00#&	34.00	1/8	L, U	T, Q, A, B	R	P	SHA, ULT
RBR56%34R40#&	34.40	1/8	L, U	T, Q, A, B	R	P	SHA, ULT
RBR56%34R80#&	34.80	1/8	L, U	T, Q, A, B	R	P	SHA, ULT
RBR56%35R20#&	35.20	1/8	L, U	T, Q, A, B	R	P	SHA, ULT
RBR56%35R70#&	35.70	1/8	L, U	T, Q, A, B	R	P	SHA, ULT
RBR56%36R10#&	36.10	1/8	L, U	T, Q, A, B	R	P	SHA, ULT
RBR56%36R50#&	36.50	1/8	L, U	T, Q, A, B	R	P	SHA, ULT
RBR56%37R00#&	37.00	1/8	L, U	T, Q, A, B	R	P	SHA, ULT
RBR56%37R40#&	37.40	1/8	L, U	T, Q, A, B	R	P	SHA, ULT
RBR56%37R90#&	37.90	1/8	L, U	T, Q, A, B	R	P	SHA, ULT
RBR56%38R30#&	38.30	1/8	L, U	T, Q, A, B	R	P	SHA, ULT
RBR56%38R80#&	38.80	1/8	L, U	T, Q, A, B	R	P	SHA, ULT
RBR56%39R20#&	39.20	1/8	L, U	T, Q, A, B	R	P	SHA, ULT
RBR56%39R70#&	39.70	1/8	L, U	T, Q, A, B	R	P	SHA, ULT
RBR56%40R20#&	40.20	1/8	L, U	T, Q, A, B	R	P	SHA, ULT
RBR56%40R70#&	40.70	1/8	L, U	T, Q, A, B	R	P	SHA, ULT
RBR56%41R20#&	41.20	1/8	L, U	T, Q, A, B	R	P	SHA, ULT
RBR56%41R70#&	41.70	1/8	L, U	T, Q, A, B	R	P	SHA, ULT
RBR56%42R20#&	42.20	1/8	L, U	T, Q, A, B	R	P	SHA, ULT
RBR56%42R70#&	42.70	1/8	L, U	T, Q, A, B	R	P	SHA, ULT
RBR56%43R20#&	43.20	1/8	L, U	T, Q, A, B	R	P	SHA, ULT
RBR56%43R70#&	43.70	1/8	L, U	T, Q, A, B	R	P	SHA, ULT
RBR56%44R20#&	44.20	1/8	L, U	T, Q, A, B	R	P	SHA, ULT
RBR56%44R80#&	44.80	1/8	L, U	T, Q, A, B	R	P	SHA, ULT
RBR56%45R30#&	45.30	1/8	L, U	T, Q, A, B	R	P	SHA, ULT
RBR56%45R90#&	45.90	1/8	L, U	T, Q, A, B	R	P	SHA, ULT
RBR56%46R40#&	46.40	1/8	L, U	T, Q, A, B	R	P	SHA, ULT
RBR56%47R00#&	47.00	1/8	L, U	T, Q, A, B	R	P	SHA, ULT
RBR56%47R50#&	47.50	1/8	L, U	T, Q, A, B	R	P	SHA, ULT
RBR56%48R10#&	48.10	1/8	L, U	T, Q, A, B	R	P	SHA, ULT
RBR56%48R70#&	48.70	1/8	L, U	T, Q, A, B	R	P	SHA, ULT
RBR56%49R30#&	49.30	1/8	L, U	T, Q, A, B	R	P	SHA, ULT
RBR56%49R90#&	49.90	1/8	L, U	T, Q, A, B	R	P	SHA, ULT
RBR56%50R50#&	50.50	1/8	L, U	T, Q, A, B	R	P	SHA, ULT

RBR56%51R10#&	51.10	1/8	L, U	T, Q, A, B	R	P	SHA, ULT
RBR56%51R70#&	51.70	1/8	L, U	T, Q, A, B	R	P	SHA, ULT
RBR56%52R30#&	52.30	1/8	L, U	T, Q, A, B	R	P	SHA, ULT
RBR56%53R00#&	53.00	1/8	L, U	T, Q, A, B	R	P	SHA, ULT
RBR56%53R60#&	53.60	1/8	L, U	T, Q, A, B	R	P	SHA, ULT
RBR56%54R20#&	54.20	1/8	L, U	T, Q, A, B	R	P	SHA, ULT
RBR56%54R90#&	54.90	1/8	L, U	T, Q, A, B	R	P	SHA, ULT
RBR56%55R60#&	55.60	1/8	L, U	T, Q, A, B	R	P	SHA, ULT
RBR56%56R20#&	56.20	1/8	L, U	T, Q, A, B	R	P	SHA, ULT
RBR56%56R90#&	56.90	1/8	L, U	T, Q, A, B	R	P	SHA, ULT
RBR56%57R60#&	57.60	1/8	L, U	T, Q, A, B	R	P	SHA, ULT
RBR56%58R30#&	58.30	1/8	L, U	T, Q, A, B	R	P	SHA, ULT
RBR56%59R00#&	59.00	1/8	L, U	T, Q, A, B	R	P	SHA, ULT
RBR56%59R70#&	59.70	1/8	L, U	T, Q, A, B	R	P	SHA, ULT
RBR56%60R40#&	60.40	1/8	L, U	T, Q, A, B	R	P	SHA, ULT
RBR56%61R20#&	61.20	1/8	L, U	T, Q, A, B	R	P	SHA, ULT
RBR56%61R90#&	61.90	1/8	L, U	T, Q, A, B	R	P	SHA, ULT
RBR56%62R60#&	62.60	1/8	L, U	T, Q, A, B	R	P	SHA, ULT
RBR56%63R40#&	63.40	1/8	L, U	T, Q, A, B	R	P	SHA, ULT
RBR56%64R20#&	64.20	1/8	L, U	T, Q, A, B	R	P	SHA, ULT
RBR56%64R90#&	64.90	1/8	L, U	T, Q, A, B	R	P	SHA, ULT
RBR56%65R70#&	65.70	1/8	L, U	T, Q, A, B	R	P	SHA, ULT
RBR56%66R50#&	66.50	1/8	L, U	T, Q, A, B	R	P	SHA, ULT
RBR56%67R30#&	67.30	1/8	L, U	T, Q, A, B	R	P	SHA, ULT
RBR56%68R10#&	68.10	1/8	L, U	T, Q, A, B	R	P	SHA, ULT
RBR56%69R00#&	69.00	1/8	L, U	T, Q, A, B	R	P	SHA, ULT
RBR56%69R80#&	69.80	1/8	L, U	T, Q, A, B	R	P	SHA, ULT
RBR56%70R60#&	70.60	1/8	L, U	T, Q, A, B	R	P	SHA, ULT
RBR56%71R50#&	71.50	1/8	L, U	T, Q, A, B	R	P	SHA, ULT
RBR56%72R30#&	72.30	1/8	L, U	T, Q, A, B	R	P	SHA, ULT
RBR56%73R20#&	73.20	1/8	L, U	T, Q, A, B	R	P	SHA, ULT
RBR56%74R10#&	74.10	1/8	L, U	T, Q, A, B	R	P	SHA, ULT
RBR56%75R00#&	75.00	1/8	L, U	T, Q, A, B	R	P	SHA, ULT
RBR56%75R90#&	75.90	1/8	L, U	T, Q, A, B	R	P	SHA, ULT
RBR56%76R80#&	76.80	1/8	L, U	T, Q, A, B	R	P	SHA, ULT
RBR56%77R70#&	77.70	1/8	L, U	T, Q, A, B	R	P	SHA, ULT
RBR56%78R70#&	78.70	1/8	L, U	T, Q, A, B	R	P	SHA, ULT
RBR56%79R60#&	79.60	1/8	L, U	T, Q, A, B	R	P	SHA, ULT
RBR56%80R60#&	80.60	1/8	L, U	T, Q, A, B	R	P	SHA, ULT
RBR56%81R60#&	81.60	1/8	L, U	T, Q, A, B	R	P	SHA, ULT
RBR56%82R50#&	82.50	1/8	L, U	T, Q, A, B	R	P	SHA, ULT
RBR56%83R50#&	83.50	1/8	L, U	T, Q, A, B	R	P	SHA, ULT
RBR56%84R50#&	84.50	1/8	L, U	T, Q, A, B	R	P	SHA, ULT
RBR56%85R60#&	85.60	1/8	L, U	T, Q, A, B	R	P	SHA, ULT
RBR56%86R60#&	86.60	1/8	L, U	T, Q, A, B	R	P	SHA, ULT
RBR56%87R60#&	87.60	1/8	L, U	T, Q, A, B	R	P	SHA, ULT
RBR56%88R70#&	88.70	1/8	L, U	T, Q, A, B	R	P	SHA, ULT

RBR56%89R80#&	89.80	1/8	L, U	T, Q, A, B	R	P	SHA, ULT
RBR56%90R90#&	90.90	1/8	L, U	T, Q, A, B	R	P	SHA, ULT
RBR56%92R00#&	92.00	1/8	L, U	T, Q, A, B	R	P	SHA, ULT
RBR56%93R10#&	93.10	1/8	L, U	T, Q, A, B	R	P	SHA, ULT
RBR56%94R20#&	94.20	1/8	L, U	T, Q, A, B	R	P	SHA, ULT
RBR56%95R30#&	95.30	1/8	L, U	T, Q, A, B	R	P	SHA, ULT
RBR56%96R50#&	96.50	1/8	L, U	T, Q, A, B	R	P	SHA, ULT
RBR56%97R60#&	97.60	1/8	L, U	T, Q, A, B	R	P	SHA, ULT
RBR56%98R80#&	98.80	1/8	L, U	T, Q, A, B	R	P	SHA, ULT
RBR56%100R0#&	100.0	1/8	L, U	T, Q, A, B	R	P	SHA, ULT
RBR56%101R0#&	101.0	1/8	L, U	T, Q, A, B	R	P	SHA, ULT
RBR56%102R0#&	102.0	1/8	L, U	T, Q, A, B	R	P	SHA, ULT
RBR56%104R0#&	104.0	1/8	L, U	T, Q, A, B	R	P	SHA, ULT
RBR56%105R0#&	105.0	1/8	L, U	T, Q, A, B	R	P	SHA, ULT
RBR56%106R0#&	106.0	1/8	L, U	T, Q, A, B	R	P	SHA, ULT
RBR56%107R0#&	107.0	1/8	L, U	T, Q, A, B	R	P	SHA, ULT
RBR56%109R0#&	109.0	1/8	L, U	T, Q, A, B	R	P	SHA, ULT
RBR56%110R0#&	110.0	1/8	L, U	T, Q, A, B	R	P	SHA, ULT
RBR56%111R0#&	111.0	1/8	L, U	T, Q, A, B	R	P	SHA, ULT
RBR56%113R0#&	113.0	1/8	L, U	T, Q, A, B	R	P	SHA, ULT
RBR56%114R0#&	114.0	1/8	L, U	T, Q, A, B	R	P	SHA, ULT
RBR56%115R0#&	115.0	1/8	L, U	T, Q, A, B	R	P	SHA, ULT
RBR56%117R0#&	117.0	1/8	L, U	T, Q, A, B	R	P	SHA, ULT
RBR56%118R0#&	118.0	1/8	L, U	T, Q, A, B	R	P	SHA, ULT
RBR56%120R0#&	120.0	1/8	L, U	T, Q, A, B	R	P	SHA, ULT
RBR56%121R0#&	121.0	1/8	L, U	T, Q, A, B	R	P	SHA, ULT
RBR56%123R0#&	123.0	1/8	L, U	T, Q, A, B	R	P	SHA, ULT
RBR56%124R0#&	124.0	1/8	L, U	T, Q, A, B	R	P	SHA, ULT
RBR56%126R0#&	126.0	1/8	L, U	T, Q, A, B	R	P	SHA, ULT
RBR56%127R0#&	127.0	1/8	L, U	T, Q, A, B	R	P	SHA, ULT
RBR56%129R0#&	129.0	1/8	L, U	T, Q, A, B	R	P	SHA, ULT
RBR56%130R0#&	130.0	1/8	L, U	T, Q, A, B	R	P	SHA, ULT
RBR56%132R0#&	132.0	1/8	L, U	T, Q, A, B	R	P	SHA, ULT
RBR56%133R0#&	133.0	1/8	L, U	T, Q, A, B	R	P	SHA, ULT
RBR56%135R0#&	135.0	1/8	L, U	T, Q, A, B	R	P	SHA, ULT
RBR56%137R0#&	137.0	1/8	L, U	T, Q, A, B	R	P	SHA, ULT
RBR56%138R0#&	138.0	1/8	L, U	T, Q, A, B	R	P	SHA, ULT
RBR56%140R0#&	140.0	1/8	L, U	T, Q, A, B	R	P	SHA, ULT
RBR56%142R0#&	142.0	1/8	L, U	T, Q, A, B	R	P	SHA, ULT
RBR56%143R0#&	143.0	1/8	L, U	T, Q, A, B	R	P	SHA, ULT
RBR56%145R0#&	145.0	1/8	L, U	T, Q, A, B	R	P	SHA, ULT
RBR56%147R0#&	147.0	1/8	L, U	T, Q, A, B	R	P	SHA, ULT
RBR56%149R0#&	149.0	1/8	L, U	T, Q, A, B	R	P	SHA, ULT
RBR56%150R0#&	150.0	1/8	L, U	T, Q, A, B	R	P	SHA, ULT
RBR56%152R0#&	152.0	1/8	L, U	T, Q, A, B	R	P	SHA, ULT
RBR56%154R0#&	154.0	1/8	L, U	T, Q, A, B	R	P	SHA, ULT
RBR56%156R0#&	156.0	1/8	L, U	T, Q, A, B	R	P	SHA, ULT

RBR56%158R0#&	158.0	1/8	L, U	T, Q, A, B	R	P	SHA, ULT
RBR56%160R0#&	160.0	1/8	L, U	T, Q, A, B	R	P	SHA, ULT
RBR56%162R0#&	162.0	1/8	L, U	T, Q, A, B	R	P	SHA, ULT
RBR56%164R0#&	164.0	1/8	L, U	T, Q, A, B	R	P	SHA, ULT
RBR56%165R0#&	165.0	1/8	L, U	T, Q, A, B	R	P	SHA, ULT
RBR56%167R0#&	167.0	1/8	L, U	T, Q, A, B	R	P	SHA, ULT
RBR56%169R0#&	169.0	1/8	L, U	T, Q, A, B	R	P	SHA, ULT
RBR56%172R0#&	172.0	1/8	L, U	T, Q, A, B	R	P	SHA, ULT
RBR56%174R0#&	174.0	1/8	L, U	T, Q, A, B	R	P	SHA, ULT
RBR56%176R0#&	176.0	1/8	L, U	T, Q, A, B	R	P	SHA, ULT
RBR56%178R0#&	178.0	1/8	L, U	T, Q, A, B	R	P	SHA, ULT
RBR56%180R0#&	180.0	1/8	L, U	T, Q, A, B	R	P	SHA, ULT
RBR56%182R0#&	182.0	1/8	L, U	T, Q, A, B	R	P	SHA, ULT
RBR56%184R0#&	184.0	1/8	L, U	T, Q, A, B	R	P	SHA, ULT
RBR56%187R0#&	187.0	1/8	L, U	T, Q, A, B	R	P	SHA, ULT
RBR56%189R0#&	189.0	1/8	L, U	T, Q, A, B	R	P	SHA, ULT
RBR56%191R0#&	191.0	1/8	L, U	T, Q, A, B	R	P	SHA, ULT
RBR56%193R0#&	193.0	1/8	L, U	T, Q, A, B	R	P	SHA, ULT
RBR56%196R0#&	196.0	1/8	L, U	T, Q, A, B	R	P	SHA, ULT
RBR56%198R0#&	198.0	1/8	L, U	T, Q, A, B	R	P	SHA, ULT
RBR56%200R0#&	200.0	1/8	L, U	T, Q, A, B	R	P	SHA, ULT
RBR56%203R0#&	203.0	1/8	L, U	T, Q, A, B	R	P	SHA, ULT
RBR56%205R0#&	205.0	1/8	L, U	T, Q, A, B	R	P	SHA, ULT
RBR56%208R0#&	208.0	1/8	L, U	T, Q, A, B	R	P	SHA, ULT
RBR56%210R0#&	210.0	1/8	L, U	T, Q, A, B	R	P	SHA, ULT
RBR56%213R0#&	213.0	1/8	L, U	T, Q, A, B	R	P	SHA, ULT
RBR56%215R0#&	215.0	1/8	L, U	T, Q, A, B	R	P	SHA, ULT
RBR56%218R0#&	218.0	1/8	L, U	T, Q, A, B	R	P	SHA, ULT
RBR56%221R0#&	221.0	1/8	L, U	T, Q, A, B	R	P	SHA, ULT
RBR56%223R0#&	223.0	1/8	L, U	T, Q, A, B	R	P	SHA, ULT
RBR56%226R0#&	226.0	1/8	L, U	T, Q, A, B	R	P	SHA, ULT
RBR56%229R0#&	229.0	1/8	L, U	T, Q, A, B	R	P	SHA, ULT
RBR56%232R0#&	232.0	1/8	L, U	T, Q, A, B	R	P	SHA, ULT
RBR56%234R0#&	234.0	1/8	L, U	T, Q, A, B	R	P	SHA, ULT
RBR56%237R0#&	237.0	1/8	L, U	T, Q, A, B	R	P	SHA, ULT
RBR56%240R0#&	240.0	1/8	L, U	T, Q, A, B	R	P	SHA, ULT
RBR56%243R0#&	243.0	1/8	L, U	T, Q, A, B	R	P	SHA, ULT
RBR56%246R0#&	246.0	1/8	L, U	T, Q, A, B	R	P	SHA, ULT
RBR56%249R0#&	249.0	1/8	L, U	T, Q, A, B	R	P	SHA, ULT
RBR56%252R0#&	252.0	1/8	L, U	T, Q, A, B	R	P	SHA, ULT
RBR56%255R0#&	255.0	1/8	L, U	T, Q, A, B	R	P	SHA, ULT
RBR56%258R0#&	258.0	1/8	L, U	T, Q, A, B	R	P	SHA, ULT
RBR56%261R0#&	261.0	1/8	L, U	T, Q, A, B	R	P	SHA, ULT
RBR56%264R0#&	264.0	1/8	L, U	T, Q, A, B	R	P	SHA, ULT
RBR56%267R0#&	267.0	1/8	L, U	T, Q, A, B	R	P	SHA, ULT
RBR56%271R0#&	271.0	1/8	L, U	T, Q, A, B	R	P	SHA, ULT
RBR56%274R0#&	274.0	1/8	L, U	T, Q, A, B	R	P	SHA, ULT

RBR56%277R0#&	277.0	1/8	L, U	T, Q, A, B	R	P	SHA, ULT
RBR56%280R0#&	280.0	1/8	L, U	T, Q, A, B	R	P	SHA, ULT
RBR56%284R0#&	284.0	1/8	L, U	T, Q, A, B	R	P	SHA, ULT
RBR56%287R0#&	287.0	1/8	L, U	T, Q, A, B	R	P	SHA, ULT
RBR56%291R0#&	291.0	1/8	L, U	T, Q, A, B	R	P	SHA, ULT
RBR56%294R0#&	294.0	1/8	L, U	T, Q, A, B	R	P	SHA, ULT
RBR56%298R0#&	298.0	1/8	L, U	T, Q, A, B	R	P	SHA, ULT
RBR56%301R0#&	301.0	1/8	L, U	T, Q, A, B	R	P	SHA, ULT
RBR56%305R0#&	305.0	1/8	L, U	T, Q, A, B	R	P	SHA, ULT
RBR56%309R0#&	309.0	1/8	L, U	T, Q, A, B	R	P	SHA, ULT
RBR56%312R0#&	312.0	1/8	L, U	T, Q, A, B	R	P	SHA, ULT
RBR56%316R0#&	316.0	1/8	L, U	T, Q, A, B	R	P	SHA, ULT
RBR56%320R0#&	320.0	1/8	L, U	T, Q, A, B	R	P	SHA, ULT
RBR56%324R0#&	324.0	1/8	L, U	T, Q, A, B	R	P	SHA, ULT
RBR56%328R0#&	328.0	1/8	L, U	T, Q, A, B	R	P	SHA, ULT
RBR56%332R0#&	332.0	1/8	L, U	T, Q, A, B	R	P	SHA, ULT
RBR56%336R0#&	336.0	1/8	L, U	T, Q, A, B	R	P	SHA, ULT
RBR56%340R0#&	340.0	1/8	L, U	T, Q, A, B	R	P	SHA, ULT
RBR56%344R0#&	344.0	1/8	L, U	T, Q, A, B	R	P	SHA, ULT
RBR56%348R0#&	348.0	1/8	L, U	T, Q, A, B	R	P	SHA, ULT
RBR56%352R0#&	352.0	1/8	L, U	T, Q, A, B	R	P	SHA, ULT
RBR56%357R0#&	357.0	1/8	L, U	T, Q, A, B	R	P	SHA, ULT
RBR56%361R0#&	361.0	1/8	L, U	T, Q, A, B	R	P	SHA, ULT
RBR56%365R0#&	365.0	1/8	L, U	T, Q, A, B	R	P	SHA, ULT
RBR56%370R0#&	370.0	1/8	L, U	T, Q, A, B	R	P	SHA, ULT
RBR56%374R0#&	374.0	1/8	L, U	T, Q, A, B	R	P	SHA, ULT
RBR56%379R0#&	379.0	1/8	L, U	T, Q, A, B	R	P	SHA, ULT
RBR56%383R0#&	383.0	1/8	L, U	T, Q, A, B	R	P	SHA, ULT
RBR56%388R0#&	388.0	1/8	L, U	T, Q, A, B	R	P	SHA, ULT
RBR56%392R0#&	392.0	1/8	L, U	T, Q, A, B	R	P	SHA, ULT
RBR56%397R0#&	397.0	1/8	L, U	T, Q, A, B	R	P	SHA, ULT
RBR56%402R0#&	402.0	1/8	L, U	T, Q, A, B	R	P	SHA, ULT
RBR56%407R0#&	407.0	1/8	L, U	T, Q, A, B	R	P	SHA, ULT
RBR56%412R0#&	412.0	1/8	L, U	T, Q, A, B	R	P	SHA, ULT
RBR56%417R0#&	417.0	1/8	L, U	T, Q, A, B	R	P	SHA, ULT
RBR56%422R0#&	422.0	1/8	L, U	T, Q, A, B	R	P	SHA, ULT
RBR56%427R0#&	427.0	1/8	L, U	T, Q, A, B	R	P	SHA, ULT
RBR56%432R0#&	432.0	1/8	L, U	T, Q, A, B	R	P	SHA, ULT
RBR56%437R0#&	437.0	1/8	L, U	T, Q, A, B	R	P	SHA, ULT
RBR56%442R0#&	442.0	1/8	L, U	T, Q, A, B	R	P	SHA, ULT
RBR56%448R0#&	448.0	1/8	L, U	T, Q, A, B	R	P	SHA, ULT
RBR56%453R0#&	453.0	1/8	L, U	T, Q, A, B	R	P	SHA, ULT
RBR56%459R0#&	459.0	1/8	L, U	T, Q, A, B	R	P	SHA, ULT
RBR56%464R0#&	464.0	1/8	L, U	T, Q, A, B	R	P	SHA, ULT
RBR56%470R0#&	470.0	1/8	L, U	T, Q, A, B	R	P	SHA, ULT
RBR56%475R0#&	475.0	1/8	L, U	T, Q, A, B	R	P	SHA, ULT
RBR56%481R0#&	481.0	1/8	L, U	T, Q, A, B	R	P	SHA, ULT

RBR56%487R0#&	487.0	1/8	L, U	T, Q, A, B	R	P	SHA, ULT
RBR56%493R0#&	493.0	1/8	L, U	T, Q, A, B	R	P	SHA, ULT
RBR56%499R0#&	499.0	1/8	L, U	T, Q, A, B	R	P	SHA, ULT
RBR56%505R0#&	505.0	1/8	L, U	T, Q, A, B	R	P	SHA, ULT
RBR56%511R0#&	511.0	1/8	L, U	T, Q, A, B	R	P	SHA, ULT
RBR56%517R0#&	517.0	1/8	L, U	T, Q, A, B	R	P	SHA, ULT
RBR56%523R0#&	523.0	1/8	L, U	T, Q, A, B	R	P	SHA, ULT
RBR56%530R0#&	530.0	1/8	L, U	T, Q, A, B	R	P	SHA, ULT
RBR56%536R0#&	536.0	1/8	L, U	T, Q, A, B	R	P	SHA, ULT
RBR56%542R0#&	542.0	1/8	L, U	T, Q, A, B	R	P	SHA, ULT
RBR56%549R0#&	549.0	1/8	L, U	T, Q, A, B	R	P	SHA, ULT
RBR56%556R0#&	556.0	1/8	L, U	T, Q, A, B	R	P	SHA, ULT
RBR56%562R0#&	562.0	1/8	L, U	T, Q, A, B	R	P	SHA, ULT
RBR56%569R0#&	569.0	1/8	L, U	T, Q, A, B	R	P	SHA, ULT
RBR56%576R0#&	576.0	1/8	L, U	T, Q, A, B	R	P	SHA, ULT
RBR56%583R0#&	583.0	1/8	L, U	T, Q, A, B	R	P	SHA, ULT
RBR56%590R0#&	590.0	1/8	L, U	T, Q, A, B	R	P	SHA, ULT
RBR56%597R0#&	597.0	1/8	L, U	T, Q, A, B	R	P	SHA, ULT
RBR56%604R0#&	604.0	1/8	L, U	T, Q, A, B	R	P	SHA, ULT
RBR56%612R0#&	612.0	1/8	L, U	T, Q, A, B	R	P	SHA, ULT
RBR56%619R0#&	619.0	1/8	L, U	T, Q, A, B	R	P	SHA, ULT
RBR56%626R0#&	626.0	1/8	L, U	T, Q, A, B	R	P	SHA, ULT
RBR56%634R0#&	634.0	1/8	L, U	T, Q, A, B	R	P	SHA, ULT
RBR56%642R0#&	642.0	1/8	L, U	T, Q, A, B	R	P	SHA, ULT
RBR56%649R0#&	649.0	1/8	L, U	T, Q, A, B	R	P	SHA, ULT
RBR56%657R0#&	657.0	1/8	L, U	T, Q, A, B	R	P	SHA, ULT
RBR56%665R0#&	665.0	1/8	L, U	T, Q, A, B	R	P	SHA, ULT
RBR56%673R0#&	673.0	1/8	L, U	T, Q, A, B	R	P	SHA, ULT
RBR56%681R0#&	681.0	1/8	L, U	T, Q, A, B	R	P	SHA, ULT
RBR56%690R0#&	690.0	1/8	L, U	T, Q, A, B	R	P	SHA, ULT
RBR56%698R0#&	698.0	1/8	L, U	T, Q, A, B	R	P	SHA, ULT
RBR56%706R0#&	706.0	1/8	L, U	T, Q, A, B	R	P	SHA, ULT
RBR56%715R0#&	715.0	1/8	L, U	T, Q, A, B	R	P	SHA, ULT
RBR56%723R0#&	723.0	1/8	L, U	T, Q, A, B	R	P	SHA, ULT
RBR56%732R0#&	732.0	1/8	L, U	T, Q, A, B	R	P	SHA, ULT
RBR56%741R0#&	741.0	1/8	L, U	T, Q, A, B	R	P	SHA, ULT
RBR56%750R0#&	750.0	1/8	L, U	T, Q, A, B	R	P	SHA, ULT
RBR56%759R0#&	759.0	1/8	L, U	T, Q, A, B	R	P	SHA, ULT
RBR56%768R0#&	768.0	1/8	L, U	T, Q, A, B	R	P	SHA, ULT
RBR56%777R0#&	777.0	1/8	L, U	T, Q, A, B	R	P	SHA, ULT
RBR56%787R0#&	787.0	1/8	L, U	T, Q, A, B	R	P	SHA, ULT
RBR56%796R0#&	796.0	1/8	L, U	T, Q, A, B	R	P	SHA, ULT
RBR56%806R0#&	806.0	1/8	L, U	T, Q, A, B	R	P	SHA, ULT
RBR56%816R0#&	816.0	1/8	L, U	T, Q, A, B	R	P	SHA, ULT
RBR56%825R0#&	825.0	1/8	L, U	T, Q, A, B	R	P	SHA, ULT
RBR56%835R0#&	835.0	1/8	L, U	T, Q, A, B	R	P	SHA, ULT
RBR56%845R0#&	845.0	1/8	L, U	T, Q, A, B	R	P	SHA, ULT

RBR56%856R0#&	856.0	1/8	L, U	T, Q, A, B	R	P	SHA, ULT
RBR56%866R0#&	866.0	1/8	L, U	T, Q, A, B	R	P	SHA, ULT
RBR56%876R0#&	876.0	1/8	L, U	T, Q, A, B	R	P	SHA, ULT
RBR56%887R0#&	887.0	1/8	L, U	T, Q, A, B	R	P	SHA, ULT
RBR56%898R0#&	898.0	1/8	L, U	T, Q, A, B	R	P	SHA, ULT
RBR56%909R0#&	909.0	1/8	L, U	T, Q, A, B	R	P	SHA, ULT
RBR56%920R0#&	920.0	1/8	L, U	T, Q, A, B	R	P	SHA, ULT
RBR56%931R0#&	931.0	1/8	L, U	T, Q, A, B	R	P	SHA, ULT
RBR56%942R0#&	942.0	1/8	L, U	T, Q, A, B	R	P	SHA, ULT
RBR56%953R0#&	953.0	1/8	L, U	T, Q, A, B	R	P	SHA, ULT
RBR56%965R0#&	965.0	1/8	L, U	T, Q, A, B	R	P	SHA, ULT
RBR56%976R0#&	976.0	1/8	L, U	T, Q, A, B	R	P	SHA, ULT
RBR56%988R0#&	988.0	1/8	L, U	T, Q, A, B	R	P	SHA, ULT
RBR56%10000#&	1,000	1/8	L, U	T, Q, A, B	R	P	SHA, ULT
RBR56%10100#&	1,010	1/8	L, U	T, Q, A, B	R	P	SHA, ULT
RBR56%10200#&	1,020	1/8	L, U	T, Q, A, B	R	P	SHA, ULT
RBR56%10400#&	1,040	1/8	L, U	T, Q, A, B	R	P	SHA, ULT
RBR56%10500#&	1,050	1/8	L, U	T, Q, A, B	R	P	SHA, ULT
RBR56%10600#&	1,060	1/8	L, U	T, Q, A, B	R	P	SHA, ULT
RBR56%10700#&	1,070	1/8	L, U	T, Q, A, B	R	P	SHA, ULT
RBR56%10900#&	1,090	1/8	L, U	T, Q, A, B	R	P	SHA, ULT
RBR56%11000#&	1,100	1/8	L, U	T, Q, A, B	R	P	SHA, ULT
RBR56%11100#&	1,110	1/8	L, U	T, Q, A, B	R	P	SHA, ULT
RBR56%11300#&	1,130	1/8	L, U	T, Q, A, B	R	P	SHA, ULT
RBR56%11400#&	1,140	1/8	L, U	T, Q, A, B	R	P	SHA, ULT
RBR56%11500#&	1,150	1/8	L, U	T, Q, A, B	R	P	SHA, ULT
RBR56%11700#&	1,170	1/8	L, U	T, Q, A, B	R	P	SHA, ULT
RBR56%11800#&	1,180	1/8	L, U	T, Q, A, B	R	P	SHA, ULT
RBR56%12000#&	1,200	1/8	L, U	T, Q, A, B	R	P	SHA, ULT
RBR56%12100#&	1,210	1/8	L, U	T, Q, A, B	R	P	SHA, ULT
RBR56%12300#&	1,230	1/8	L, U	T, Q, A, B	R	P	SHA, ULT
RBR56%12400#&	1,240	1/8	L, U	T, Q, A, B	R	P	SHA, ULT
RBR56%12600#&	1,260	1/8	L, U	T, Q, A, B	R	P	SHA, ULT
RBR56%12700#&	1,270	1/8	L, U	T, Q, A, B	R	P	SHA, ULT
RBR56%12900#&	1,290	1/8	L, U	T, Q, A, B	R	P	SHA, ULT
RBR56%13000#&	1,300	1/8	L, U	T, Q, A, B	R	P	SHA, ULT
RBR56%13200#&	1,320	1/8	L, U	T, Q, A, B	R	P	SHA, ULT
RBR56%13300#&	1,330	1/8	L, U	T, Q, A, B	R	P	SHA, ULT
RBR56%13500#&	1,350	1/8	L, U	T, Q, A, B	R	P	SHA, ULT
RBR56%13700#&	1,370	1/8	L, U	T, Q, A, B	R	P	SHA, ULT
RBR56%13800#&	1,380	1/8	L, U	T, Q, A, B	R	P	SHA, ULT
RBR56%14000#&	1,400	1/8	L, U	T, Q, A, B	R	P	SHA, ULT
RBR56%14200#&	1,420	1/8	L, U	T, Q, A, B	R	P	SHA, ULT
RBR56%14300#&	1,430	1/8	L, U	T, Q, A, B	R	P	SHA, ULT
RBR56%14500#&	1,450	1/8	L, U	T, Q, A, B	R	P	SHA, ULT
RBR56%14700#&	1,470	1/8	L, U	T, Q, A, B	R	P	SHA, ULT
RBR56%14900#&	1,490	1/8	L, U	T, Q, A, B	R	P	SHA, ULT

RBR56%15000#&	1,500	1/8	L, U	T, Q, A, B	R	P	SHA, ULT
RBR56%15200#&	1,520	1/8	L, U	T, Q, A, B	R	P	SHA, ULT
RBR56%15400#&	1,540	1/8	L, U	T, Q, A, B	R	P	SHA, ULT
RBR56%15600#&	1,560	1/8	L, U	T, Q, A, B	R	P	SHA, ULT
RBR56%15800#&	1,580	1/8	L, U	T, Q, A, B	R	P	SHA, ULT
RBR56%16000#&	1,600	1/8	L, U	T, Q, A, B	R	P	SHA, ULT
RBR56%16200#&	1,620	1/8	L, U	T, Q, A, B	R	P	SHA, ULT
RBR56%16400#&	1,640	1/8	L, U	T, Q, A, B	R	P	SHA, ULT
RBR56%16500#&	1,650	1/8	L, U	T, Q, A, B	R	P	SHA, ULT
RBR56%16700#&	1,670	1/8	L, U	T, Q, A, B	R	P	SHA, ULT
RBR56%16900#&	1,690	1/8	L, U	T, Q, A, B	R	P	SHA, ULT
RBR56%17200#&	1,720	1/8	L, U	T, Q, A, B	R	P	SHA, ULT
RBR56%17400#&	1,740	1/8	L, U	T, Q, A, B	R	P	SHA, ULT
RBR56%17600#&	1,760	1/8	L, U	T, Q, A, B	R	P	SHA, ULT
RBR56%17800#&	1,780	1/8	L, U	T, Q, A, B	R	P	SHA, ULT
RBR56%18000#&	1,800	1/8	L, U	T, Q, A, B	R	P	SHA, ULT
RBR56%18200#&	1,820	1/8	L, U	T, Q, A, B	R	P	SHA, ULT
RBR56%18400#&	1,840	1/8	L, U	T, Q, A, B	R	P	SHA, ULT
RBR56%18700#&	1,870	1/8	L, U	T, Q, A, B	R	P	SHA, ULT
RBR56%18900#&	1,890	1/8	L, U	T, Q, A, B	R	P	SHA, ULT
RBR56%19100#&	1,910	1/8	L, U	T, Q, A, B	R	P	SHA, ULT
RBR56%19300#&	1,930	1/8	L, U	T, Q, A, B	R	P	SHA, ULT
RBR56%19600#&	1,960	1/8	L, U	T, Q, A, B	R	P	SHA, ULT
RBR56%19800#&	1,980	1/8	L, U	T, Q, A, B	R	P	SHA, ULT
RBR56%20000#&	2,000	1/8	L, U	T, Q, A, B	R	P	SHA, ULT
RBR56%20300#&	2,030	1/8	L, U	T, Q, A, B	R	P	SHA, ULT
RBR56%20500#&	2,050	1/8	L, U	T, Q, A, B	R	P	SHA, ULT
RBR56%20800#&	2,080	1/8	L, U	T, Q, A, B	R	P	SHA, ULT
RBR56%21000#&	2,100	1/8	L, U	T, Q, A, B	R	P	SHA, ULT
RBR56%21300#&	2,130	1/8	L, U	T, Q, A, B	R	P	SHA, ULT
RBR56%21500#&	2,150	1/8	L, U	T, Q, A, B	R	P	SHA, ULT
RBR56%21800#&	2,180	1/8	L, U	T, Q, A, B	R	P	SHA, ULT
RBR56%22100#&	2,210	1/8	L, U	T, Q, A, B	R	P	SHA, ULT
RBR56%22300#&	2,230	1/8	L, U	T, Q, A, B	R	P	SHA, ULT
RBR56%22600#&	2,260	1/8	L, U	T, Q, A, B	R	P	SHA, ULT
RBR56%22900#&	2,290	1/8	L, U	T, Q, A, B	R	P	SHA, ULT
RBR56%23200#&	2,320	1/8	L, U	T, Q, A, B	R	P	SHA, ULT
RBR56%23400#&	2,340	1/8	L, U	T, Q, A, B	R	P	SHA, ULT
RBR56%23700#&	2,370	1/8	L, U	T, Q, A, B	R	P	SHA, ULT
RBR56%24000#&	2,400	1/8	L, U	T, Q, A, B	R	P	SHA, ULT
RBR56%24300#&	2,430	1/8	L, U	T, Q, A, B	R	P	SHA, ULT
RBR56%24600#&	2,460	1/8	L, U	T, Q, A, B	R	P	SHA, ULT
RBR56%24900#&	2,490	1/8	L, U	T, Q, A, B	R	P	SHA, ULT
RBR56%25200#&	2,520	1/8	L, U	T, Q, A, B	R	P	SHA, ULT
RBR56%25500#&	2,550	1/8	L, U	T, Q, A, B	R	P	SHA, ULT
RBR56%25800#&	2,580	1/8	L, U	T, Q, A, B	R	P	SHA, ULT
RBR56%26100#&	2,610	1/8	L, U	T, Q, A, B	R	P	SHA, ULT

RBR56%26400#&	2,640	1/8	L, U	T, Q, A, B	R	P	SHA, ULT
RBR56%26700#&	2,670	1/8	L, U	T, Q, A, B	R	P	SHA, ULT
RBR56%27100#&	2,710	1/8	L, U	T, Q, A, B	R	P	SHA, ULT
RBR56%27400#&	2,740	1/8	L, U	T, Q, A, B	R	P	SHA, ULT
RBR56%27700#&	2,770	1/8	L, U	T, Q, A, B	R	P	SHA, ULT
RBR56%28000#&	2,800	1/8	L, U	T, Q, A, B	R	P	SHA, ULT
RBR56%28400#&	2,840	1/8	L, U	T, Q, A, B	R	P	SHA, ULT
RBR56%28700#&	2,870	1/8	L, U	T, Q, A, B	R	P	SHA, ULT
RBR56%29100#&	2,910	1/8	L, U	T, Q, A, B	R	P	SHA, ULT
RBR56%29400#&	2,940	1/8	L, U	T, Q, A, B	R	P	SHA, ULT
RBR56%29800#&	2,980	1/8	L, U	T, Q, A, B	R	P	SHA, ULT
RBR56%30100#&	3,010	1/8	L, U	T, Q, A, B	R	P	SHA, ULT
RBR56%30500#&	3,050	1/8	L, U	T, Q, A, B	R	P	SHA, ULT
RBR56%30900#&	3,090	1/8	L, U	T, Q, A, B	R	P	SHA, ULT
RBR56%31200#&	3,120	1/8	L, U	T, Q, A, B	R	P	SHA, ULT
RBR56%31600#&	3,160	1/8	L, U	T, Q, A, B	R	P	SHA, ULT
RBR56%32000#&	3,200	1/8	L, U	T, Q, A, B	R	P	SHA, ULT
RBR56%32400#&	3,240	1/8	L, U	T, Q, A, B	R	P	SHA, ULT
RBR56%32800#&	3,280	1/8	L, U	T, Q, A, B	R	P	SHA, ULT
RBR56%33200#&	3,320	1/8	L, U	T, Q, A, B	R	P	SHA, ULT
RBR56%33600#&	3,360	1/8	L, U	T, Q, A, B	R	P	SHA, ULT
RBR56%34000#&	3,400	1/8	L, U	T, Q, A, B	R	P	SHA, ULT
RBR56%34400#&	3,440	1/8	L, U	T, Q, A, B	R	P	SHA, ULT
RBR56%34800#&	3,480	1/8	L, U	T, Q, A, B	R	P	SHA, ULT
RBR56%35200#&	3,520	1/8	L, U	T, Q, A, B	R	P	SHA, ULT
RBR56%35700#&	3,570	1/8	L, U	T, Q, A, B	R	P	SHA, ULT
RBR56%36100#&	3,610	1/8	L, U	T, Q, A, B	R	P	SHA, ULT
RBR56%36500#&	3,650	1/8	L, U	T, Q, A, B	R	P	SHA, ULT
RBR56%37000#&	3,700	1/8	L, U	T, Q, A, B	R	P	SHA, ULT
RBR56%37400#&	3,740	1/8	L, U	T, Q, A, B	R	P	SHA, ULT
RBR56%37900#&	3,790	1/8	L, U	T, Q, A, B	R	P	SHA, ULT
RBR56%38300#&	3,830	1/8	L, U	T, Q, A, B	R	P	SHA, ULT
RBR56%38800#&	3,880	1/8	L, U	T, Q, A, B	R	P	SHA, ULT
RBR56%39200#&	3,920	1/8	L, U	T, Q, A, B	R	P	SHA, ULT
RBR56%39700#&	3,970	1/8	L, U	T, Q, A, B	R	P	SHA, ULT
RBR56%40200#&	4,020	1/8	L, U	T, Q, A, B	R	P	SHA, ULT
RBR56%40700#&	4,070	1/8	L, U	T, Q, A, B	R	P	SHA, ULT
RBR56%41200#&	4,120	1/8	L, U	T, Q, A, B	R	P	SHA, ULT
RBR56%41700#&	4,170	1/8	L, U	T, Q, A, B	R	P	SHA, ULT
RBR56%42200#&	4,220	1/8	L, U	T, Q, A, B	R	P	SHA, ULT
RBR56%42700#&	4,270	1/8	L, U	T, Q, A, B	R	P	SHA, ULT
RBR56%43200#&	4,320	1/8	L, U	T, Q, A, B	R	P	SHA, ULT
RBR56%43700#&	4,370	1/8	L, U	T, Q, A, B	R	P	SHA, ULT
RBR56%44200#&	4,420	1/8	L, U	T, Q, A, B	R	P	SHA, ULT
RBR56%44800#&	4,480	1/8	L, U	T, Q, A, B	R	P	SHA, ULT
RBR56%45300#&	4,530	1/8	L, U	T, Q, A, B	R	P	SHA, ULT
RBR56%45900#&	4,590	1/8	L, U	T, Q, A, B	R	P	SHA, ULT

RBR56%46400#&	4,640	1/8	L, U	T, Q, A, B	R	P	SHA, ULT
RBR56%47000#&	4,700	1/8	L, U	T, Q, A, B	R	P	SHA, ULT
RBR56%47500#&	4,750	1/8	L, U	T, Q, A, B	R	P	SHA, ULT
RBR56%48100#&	4,810	1/8	L, U	T, Q, A, B	R	P	SHA, ULT
RBR56%48700#&	4,870	1/8	L, U	T, Q, A, B	R	P	SHA, ULT
RBR56%49300#&	4,930	1/8	L, U	T, Q, A, B	R	P	SHA, ULT
RBR56%49900#&	4,990	1/8	L, U	T, Q, A, B	R	P	SHA, ULT
RBR56%50500#&	5,050	1/8	L, U	T, Q, A, B	R	P	SHA, ULT
RBR56%51100#&	5,110	1/8	L, U	T, Q, A, B	R	P	SHA, ULT
RBR56%51700#&	5,170	1/8	L, U	T, Q, A, B	R	P	SHA, ULT
RBR56%52300#&	5,230	1/8	L, U	T, Q, A, B	R	P	SHA, ULT
RBR56%53000#&	5,300	1/8	L, U	T, Q, A, B	R	P	SHA, ULT
RBR56%53600#&	5,360	1/8	L, U	T, Q, A, B	R	P	SHA, ULT
RBR56%54200#&	5,420	1/8	L, U	T, Q, A, B	R	P	SHA, ULT
RBR56%54900#&	5,490	1/8	L, U	T, Q, A, B	R	P	SHA, ULT
RBR56%55600#&	5,560	1/8	L, U	T, Q, A, B	R	P	SHA, ULT
RBR56%56200#&	5,620	1/8	L, U	T, Q, A, B	R	P	SHA, ULT
RBR56%56900#&	5,690	1/8	L, U	T, Q, A, B	R	P	SHA, ULT
RBR56%57600#&	5,760	1/8	L, U	T, Q, A, B	R	P	SHA, ULT
RBR56%58300#&	5,830	1/8	L, U	T, Q, A, B	R	P	SHA, ULT
RBR56%59000#&	5,900	1/8	L, U	T, Q, A, B	R	P	SHA, ULT
RBR56%59700#&	5,970	1/8	L, U	T, Q, A, B	R	P	SHA, ULT
RBR56%60400#&	6,040	1/8	L, U	T, Q, A, B	R	P	SHA, ULT
RBR56%61200#&	6,120	1/8	L, U	T, Q, A, B	R	P	SHA, ULT
RBR56%61900#&	6,190	1/8	L, U	T, Q, A, B	R	P	SHA, ULT
RBR56%62600#&	6,260	1/8	L, U	T, Q, A, B	R	P	SHA, ULT
RBR56%63400#&	6,340	1/8	L, U	T, Q, A, B	R	P	SHA, ULT
RBR56%64200#&	6,420	1/8	L, U	T, Q, A, B	R	P	SHA, ULT
RBR56%64900#&	6,490	1/8	L, U	T, Q, A, B	R	P	SHA, ULT
RBR56%65700#&	6,570	1/8	L, U	T, Q, A, B	R	P	SHA, ULT
RBR56%66500#&	6,650	1/8	L, U	T, Q, A, B	R	P	SHA, ULT
RBR56%67300#&	6,730	1/8	L, U	T, Q, A, B	R	P	SHA, ULT
RBR56%68100#&	6,810	1/8	L, U	T, Q, A, B	R	P	SHA, ULT
RBR56%69000#&	6,900	1/8	L, U	T, Q, A, B	R	P	SHA, ULT
RBR56%69800#&	6,980	1/8	L, U	T, Q, A, B	R	P	SHA, ULT
RBR56%70600#&	7,060	1/8	L, U	T, Q, A, B	R	P	SHA, ULT
RBR56%71500#&	7,150	1/8	L, U	T, Q, A, B	R	P	SHA, ULT
RBR56%72300#&	7,230	1/8	L, U	T, Q, A, B	R	P	SHA, ULT
RBR56%73200#&	7,320	1/8	L, U	T, Q, A, B	R	P	SHA, ULT
RBR56%74100#&	7,410	1/8	L, U	T, Q, A, B	R	P	SHA, ULT
RBR56%75000#&	7,500	1/8	L, U	T, Q, A, B	R	P	SHA, ULT
RBR56%75900#&	7,590	1/8	L, U	T, Q, A, B	R	P	SHA, ULT
RBR56%76800#&	7,680	1/8	L, U	T, Q, A, B	R	P	SHA, ULT
RBR56%77700#&	7,770	1/8	L, U	T, Q, A, B	R	P	SHA, ULT
RBR56%78700#&	7,870	1/8	L, U	T, Q, A, B	R	P	SHA, ULT
RBR56%79600#&	7,960	1/8	L, U	T, Q, A, B	R	P	SHA, ULT
RBR56%80600#&	8,060	1/8	L, U	T, Q, A, B	R	P	SHA, ULT

RBR56%81600#&	8,160	1/8	L, U	T, Q, A, B	R	P	SHA, ULT
RBR56%82500#&	8,250	1/8	L, U	T, Q, A, B	R	P	SHA, ULT
RBR56%83500#&	8,350	1/8	L, U	T, Q, A, B	R	P	SHA, ULT
RBR56%84500#&	8,450	1/8	L, U	T, Q, A, B	R	P	SHA, ULT
RBR56%85600#&	8,560	1/8	L, U	T, Q, A, B	R	P	SHA, ULT
RBR56%86600#&	8,660	1/8	L, U	T, Q, A, B	R	P	SHA, ULT
RBR56%87600#&	8,760	1/8	L, U	T, Q, A, B	R	P	SHA, ULT
RBR56%88700#&	8,870	1/8	L, U	T, Q, A, B	R	P	SHA, ULT
RBR56%89800#&	8,980	1/8	L, U	T, Q, A, B	R	P	SHA, ULT
RBR56%90900#&	9,090	1/8	L, U	T, Q, A, B	R	P	SHA, ULT
RBR56%92000#&	9,190	1/8	L, U	T, Q, A, B	R	P	SHA, ULT
RBR56%93100#&	9,310	1/8	L, U	T, Q, A, B	R	P	SHA, ULT
RBR56%94200#&	9,420	1/8	L, U	T, Q, A, B	R	P	SHA, ULT
RBR56%95300#&	9,530	1/8	L, U	T, Q, A, B	R	P	SHA, ULT
RBR56%96500#&	9,650	1/8	L, U	T, Q, A, B	R	P	SHA, ULT
RBR56%97600#&	9,760	1/8	L, U	T, Q, A, B	R	P	SHA, ULT
RBR56%98800#&	9,880	1/8	L, U	T, Q, A, B	R	P	SHA, ULT
RBR56%10001#&	10,000	1/8	L, U	T, Q, A, B	R	P	SHA, ULT
RBR56%10101#&	10,100	1/8	L, U	T, Q, A, B	R	P	SHA, ULT
RBR56%10201#&	10,200	1/8	L, U	T, Q, A, B	R	P	SHA, ULT
RBR56%10401#&	10,400	1/8	L, U	T, Q, A, B	R	P	SHA, ULT
RBR56%10501#&	10,500	1/8	L, U	T, Q, A, B	R	P	SHA, ULT
RBR56%10601#&	10,600	1/8	L, U	T, Q, A, B	R	P	SHA, ULT
RBR56%10701#&	10,700	1/8	L, U	T, Q, A, B	R	P	SHA, ULT
RBR56%10901#&	10,900	1/8	L, U	T, Q, A, B	R	P	SHA, ULT
RBR56%11001#&	11,000	1/8	L, U	T, Q, A, B	R	P	SHA, ULT
RBR56%11101#&	11,100	1/8	L, U	T, Q, A, B	R	P	SHA, ULT
RBR56%11301#&	11,300	1/8	L, U	T, Q, A, B	R	P	SHA, ULT
RBR56%11401#&	11,400	1/8	L, U	T, Q, A, B	R	P	SHA, ULT
RBR56%11501#&	11,500	1/8	L, U	T, Q, A, B	R	P	SHA, ULT
RBR56%11701#&	11,700	1/8	L, U	T, Q, A, B	R	P	SHA, ULT
RBR56%11801#&	11,800	1/8	L, U	T, Q, A, B	R	P	SHA, ULT
RBR56%12001#&	12,000	1/8	L, U	T, Q, A, B	R	P	SHA, ULT
RBR56%12101#&	12,100	1/8	L, U	T, Q, A, B	R	P	SHA, ULT
RBR56%12301#&	12,300	1/8	L, U	T, Q, A, B	R	P	SHA, ULT
RBR56%12401#&	12,400	1/8	L, U	T, Q, A, B	R	P	SHA, ULT
RBR56%12601#&	12,600	1/8	L, U	T, Q, A, B	R	P	SHA, ULT
RBR56%12701#&	12,700	1/8	L, U	T, Q, A, B	R	P	SHA, ULT
RBR56%12901#&	12,900	1/8	L, U	T, Q, A, B	R	P	SHA, ULT
RBR56%13001#&	13,000	1/8	L, U	T, Q, A, B	R	P	SHA, ULT
RBR56%13201#&	13,200	1/8	L, U	T, Q, A, B	R	P	SHA, ULT
RBR56%13301#&	13,300	1/8	L, U	T, Q, A, B	R	P	SHA, ULT
RBR56%13501#&	13,500	1/8	L, U	T, Q, A, B	R	P	SHA, ULT
RBR56%13701#&	13,700	1/8	L, U	T, Q, A, B	R	P	SHA, ULT
RBR56%13801#&	13,800	1/8	L, U	T, Q, A, B	R	P	SHA, ULT
RBR56%14001#&	14,000	1/8	L, U	T, Q, A, B	R	P	SHA, ULT
RBR56%14201#&	14,200	1/8	L, U	T, Q, A, B	R	P	SHA, ULT

RBR56%14301#&	14,300	1/8	L, U	T, Q, A, B	R	P	SHA, ULT
RBR56%14501#&	14,500	1/8	L, U	T, Q, A, B	R	P	SHA, ULT
RBR56%14701#&	14,700	1/8	L, U	T, Q, A, B	R	P	SHA, ULT
RBR56%14901#&	14,900	1/8	L, U	T, Q, A, B	R	P	SHA, ULT
RBR56%15001#&	15,000	1/8	L, U	T, Q, A, B	R	P	SHA, ULT
RBR56%15201#&	15,200	1/8	L, U	T, Q, A, B	R	P	SHA, ULT
RBR56%15401#&	15,400	1/8	L, U	T, Q, A, B	R	P	SHA, ULT
RBR56%15601#&	15,600	1/8	L, U	T, Q, A, B	R	P	SHA, ULT
RBR56%15801#&	15,800	1/8	L, U	T, Q, A, B	R	P	SHA, ULT
RBR56%16001#&	16,000	1/8	L, U	T, Q, A, B	R	P	SHA, ULT
RBR56%16201#&	16,200	1/8	L, U	T, Q, A, B	R	P	SHA, ULT
RBR56%16401#&	16,400	1/8	L, U	T, Q, A, B	R	P	SHA, ULT
RBR56%16501#&	16,500	1/8	L, U	T, Q, A, B	R	P	SHA, ULT
RBR56%16701#&	16,700	1/8	L, U	T, Q, A, B	R	P	SHA, ULT
RBR56%16901#&	16,900	1/8	L, U	T, Q, A, B	R	P	SHA, ULT
RBR56%17201#&	17,200	1/8	L, U	T, Q, A, B	R	P	SHA, ULT
RBR56%17401#&	17,400	1/8	L, U	T, Q, A, B	R	P	SHA, ULT
RBR56%17601#&	17,600	1/8	L, U	T, Q, A, B	R	P	SHA, ULT
RBR56%17801#&	17,800	1/8	L, U	T, Q, A, B	R	P	SHA, ULT
RBR56%18001#&	18,000	1/8	L, U	T, Q, A, B	R	P	SHA, ULT
RBR56%18201#&	18,200	1/8	L, U	T, Q, A, B	R	P	SHA, ULT
RBR56%18401#&	18,400	1/8	L, U	T, Q, A, B	R	P	SHA, ULT
RBR56%18701#&	18,700	1/8	L, U	T, Q, A, B	R	P	SHA, ULT
RBR56%18901#&	18,900	1/8	L, U	T, Q, A, B	R	P	SHA, ULT
RBR56%19101#&	19,100	1/8	L, U	T, Q, A, B	R	P	SHA, ULT
RBR56%19301#&	19,300	1/8	L, U	T, Q, A, B	R	P	SHA, ULT
RBR56%19601#&	19,600	1/8	L, U	T, Q, A, B	R	P	SHA, ULT
RBR56%19801#&	19,800	1/8	L, U	T, Q, A, B	R	P	SHA, ULT
RBR56%20001#&	20,000	1/8	L, U	T, Q, A, B	R	P	SHA, ULT
RBR56%20301#&	20,300	1/8	L, U	T, Q, A, B	R	P	SHA, ULT
RBR56%20501#&	20,500	1/8	L, U	T, Q, A, B	R	P	SHA, ULT
RBR56%20801#&	20,800	1/8	L, U	T, Q, A, B	R	P	SHA, ULT
RBR56%21001#&	21,000	1/8	L, U	T, Q, A, B	R	P	SHA, ULT
RBR56%21301#&	21,300	1/8	L, U	T, Q, A, B	R	P	SHA, ULT
RBR56%21501#&	21,500	1/8	L, U	T, Q, A, B	R	P	SHA, ULT
RBR56%21801#&	21,800	1/8	L, U	T, Q, A, B	R	P	SHA, ULT
RBR56%22101#&	22,100	1/8	L, U	T, Q, A, B	R	P	SHA, ULT
RBR56%22301#&	22,300	1/8	L, U	T, Q, A, B	R	P	SHA, ULT
RBR56%22601#&	22,600	1/8	L, U	T, Q, A, B	R	P	SHA, ULT
RBR56%22901#&	22,900	1/8	L, U	T, Q, A, B	R	P	SHA, ULT
RBR56%23201#&	23,200	1/8	L, U	T, Q, A, B	R	P	SHA, ULT
RBR56%23401#&	23,400	1/8	L, U	T, Q, A, B	R	P	SHA, ULT
RBR56%23701#&	23,700	1/8	L, U	T, Q, A, B	R	P	SHA, ULT
RBR56%24001#&	24,000	1/8	L, U	T, Q, A, B	R	P	SHA, ULT
RBR56%24301#&	24,300	1/8	L, U	T, Q, A, B	R	P	SHA, ULT
RBR56%24601#&	24,600	1/8	L, U	T, Q, A, B	R	P	SHA, ULT
RBR56%24901#&	24,900	1/8	L, U	T, Q, A, B	R	P	SHA, ULT

RBR56%25201#&	25,200	1/8	L, U	T, Q, A, B	R	P	SHA, ULT
RBR56%25501#&	25,500	1/8	L, U	T, Q, A, B	R	P	SHA, ULT
RBR56%25801#&	25,800	1/8	L, U	T, Q, A, B	R	P	SHA, ULT
RBR56%26101#&	26,100	1/8	L, U	T, Q, A, B	R	P	SHA, ULT
RBR56%26401#&	26,400	1/8	L, U	T, Q, A, B	R	P	SHA, ULT
RBR56%26701#&	26,700	1/8	L, U	T, Q, A, B	R	P	SHA, ULT
RBR56%27101#&	27,100	1/8	L, U	T, Q, A, B	R	P	SHA, ULT
RBR56%27401#&	27,400	1/8	L, U	T, Q, A, B	R	P	SHA, ULT
RBR56%27701#&	27,700	1/8	L, U	T, Q, A, B	R	P	SHA, ULT
RBR56%28001#&	28,000	1/8	L, U	T, Q, A, B	R	P	SHA, ULT
RBR56%28401#&	28,400	1/8	L, U	T, Q, A, B	R	P	SHA, ULT
RBR56%28701#&	28,700	1/8	L, U	T, Q, A, B	R	P	SHA, ULT
RBR56%29101#&	29,100	1/8	L, U	T, Q, A, B	R	P	SHA, ULT
RBR56%29401#&	29,400	1/8	L, U	T, Q, A, B	R	P	SHA, ULT
RBR56%29801#&	29,800	1/8	L, U	T, Q, A, B	R	P	SHA, ULT
RBR56%30101#&	30,100	1/8	L, U	T, Q, A, B	R	P	SHA, ULT
RBR56%30501#&	30,500	1/8	L, U	T, Q, A, B	R	P	SHA, ULT
RBR56%30901#&	30,900	1/8	L, U	T, Q, A, B	R	P	SHA, ULT
RBR56%31201#&	31,200	1/8	L, U	T, Q, A, B	R	P	SHA, ULT
RBR56%31601#&	31,600	1/8	L, U	T, Q, A, B	R	P	SHA, ULT
RBR56%32001#&	32,000	1/8	L, U	T, Q, A, B	R	P	SHA, ULT
RBR56%32401#&	32,400	1/8	L, U	T, Q, A, B	R	P	SHA, ULT
RBR56%32801#&	32,800	1/8	L, U	T, Q, A, B	R	P	SHA, ULT
RBR56%33201#&	33,200	1/8	L, U	T, Q, A, B	R	P	SHA, ULT
RBR56%33601#&	33,600	1/8	L, U	T, Q, A, B	R	P	SHA, ULT
RBR56%34001#&	34,000	1/8	L, U	T, Q, A, B	R	P	SHA, ULT
RBR56%34401#&	34,400	1/8	L, U	T, Q, A, B	R	P	SHA, ULT
RBR56%34801#&	34,800	1/8	L, U	T, Q, A, B	R	P	SHA, ULT
RBR56%35201#&	35,200	1/8	L, U	T, Q, A, B	R	P	SHA, ULT
RBR56%35701#&	35,700	1/8	L, U	T, Q, A, B	R	P	SHA, ULT
RBR56%36101#&	36,100	1/8	L, U	T, Q, A, B	R	P	SHA, ULT
RBR56%36501#&	36,500	1/8	L, U	T, Q, A, B	R	P	SHA, ULT
RBR56%37001#&	37,000	1/8	L, U	T, Q, A, B	R	P	SHA, ULT
RBR56%37401#&	37,400	1/8	L, U	T, Q, A, B	R	P	SHA, ULT
RBR56%37901#&	37,900	1/8	L, U	T, Q, A, B	R	P	SHA, ULT
RBR56%38301#&	38,300	1/8	L, U	T, Q, A, B	R	P	SHA, ULT
RBR56%38801#&	38,800	1/8	L, U	T, Q, A, B	R	P	SHA, ULT
RBR56%39201#&	39,200	1/8	L, U	T, Q, A, B	R	P	SHA, ULT
RBR56%39701#&	39,700	1/8	L, U	T, Q, A, B	R	P	SHA, ULT
RBR56%40201#&	40,200	1/8	L, U	T, Q, A, B	R	P	SHA, ULT
RBR56%40701#&	40,700	1/8	L, U	T, Q, A, B	R	P	SHA, ULT
RBR56%41201#&	41,200	1/8	L, U	T, Q, A, B	R	P	SHA, ULT
RBR56%41701#&	41,700	1/8	L, U	T, Q, A, B	R	P	SHA, ULT
RBR56%42201#&	42,200	1/8	L, U	T, Q, A, B	R	P	SHA, ULT
RBR56%42701#&	42,700	1/8	L, U	T, Q, A, B	R	P	SHA, ULT
RBR56%43201#&	43,200	1/8	L, U	T, Q, A, B	R	P	SHA, ULT
RBR56%43701#&	43,700	1/8	L, U	T, Q, A, B	R	P	SHA, ULT

RBR56%44201#&	44,200	1/8	L, U	T, Q, A, B	R	P	SHA, ULT
RBR56%44801#&	44,800	1/8	L, U	T, Q, A, B	R	P	SHA, ULT
RBR56%45301#&	45,300	1/8	L, U	T, Q, A, B	R	P	SHA, ULT
RBR56%45901#&	45,900	1/8	L, U	T, Q, A, B	R	P	SHA, ULT
RBR56%46401#&	46,400	1/8	L, U	T, Q, A, B	R	P	SHA, ULT
RBR56%47001#&	47,000	1/8	L, U	T, Q, A, B	R	P	SHA, ULT
RBR56%47501#&	47,500	1/8	L, U	T, Q, A, B	R	P	SHA, ULT
RBR56%48101#&	48,100	1/8	L, U	T, Q, A, B	R	P	SHA, ULT
RBR56%48701#&	48,700	1/8	L, U	T, Q, A, B	R	P	SHA, ULT
RBR56%49301#&	49,300	1/8	L, U	T, Q, A, B	R	P	SHA, ULT
RBR56%49901#&	49,900	1/8	L, U	T, Q, A, B	R	P	SHA, ULT
RBR56%50501#&	50,500	1/8	L, U	T, Q, A, B	R	P	SHA, ULT
RBR56%51101#&	51,100	1/8	L, U	T, Q, A, B	R	P	SHA, ULT
RBR56%51701#&	51,700	1/8	L, U	T, Q, A, B	R	P	SHA, ULT
RBR56%52301#&	52,300	1/8	L, U	T, Q, A, B	R	P	SHA, ULT
RBR56%53001#&	53,000	1/8	L, U	T, Q, A, B	R	P	SHA, ULT
RBR56%53601#&	53,600	1/8	L, U	T, Q, A, B	R	P	SHA, ULT
RBR56%54201#&	54,200	1/8	L, U	T, Q, A, B	R	P	SHA, ULT
RBR56%54901#&	54,900	1/8	L, U	T, Q, A, B	R	P	SHA, ULT
RBR56%55601#&	55,600	1/8	L, U	T, Q, A, B	R	P	SHA, ULT
RBR56%56201#&	56,200	1/8	L, U	T, Q, A, B	R	P	SHA, ULT
RBR56%56901#&	56,900	1/8	L, U	T, Q, A, B	R	P	SHA, ULT
RBR56%57601#&	57,600	1/8	L, U	T, Q, A, B	R	P	SHA, ULT
RBR56%58301#&	58,300	1/8	L, U	T, Q, A, B	R	P	SHA, ULT
RBR56%59001#&	59,000	1/8	L, U	T, Q, A, B	R	P	SHA, ULT
RBR56%59701#&	59,700	1/8	L, U	T, Q, A, B	R	P	SHA, ULT
RBR56%60401#&	60,400	1/8	L, U	T, Q, A, B	R	P	SHA, ULT
RBR56%61201#&	61,200	1/8	L, U	T, Q, A, B	R	P	SHA, ULT
RBR56%61901#&	61,900	1/8	L, U	T, Q, A, B	R	P	SHA, ULT
RBR56%62601#&	62,600	1/8	L, U	T, Q, A, B	R	P	SHA, ULT
RBR56%63401#&	63,400	1/8	L, U	T, Q, A, B	R	P	SHA, ULT
RBR56%64201#&	64,200	1/8	L, U	T, Q, A, B	R	P	SHA, ULT
RBR56%64901#&	64,900	1/8	L, U	T, Q, A, B	R	P	SHA, ULT
RBR56%65701#&	65,700	1/8	L, U	T, Q, A, B	R	P	SHA, ULT
RBR56%66501#&	66,500	1/8	L, U	T, Q, A, B	R	P	SHA, ULT
RBR56%67301#&	67,300	1/8	L, U	T, Q, A, B	R	P	SHA, ULT
RBR56%68101#&	68,100	1/8	L, U	T, Q, A, B	R	P	SHA, ULT
RBR56%69001#&	69,000	1/8	L, U	T, Q, A, B	R	P	SHA, ULT
RBR56%69801#&	69,800	1/8	L, U	T, Q, A, B	R	P	SHA, ULT
RBR56%70601#&	70,600	1/8	L, U	T, Q, A, B	R	P	SHA, ULT
RBR56%71501#&	71,500	1/8	L, U	T, Q, A, B	R	P	SHA, ULT
RBR56%72301#&	72,300	1/8	L, U	T, Q, A, B	R	P	SHA, ULT
RBR56%73201#&	73,200	1/8	L, U	T, Q, A, B	R	P	SHA, ULT
RBR56%74101#&	74,100	1/8	L, U	T, Q, A, B	R	P	SHA, ULT
RBR56%75001#&	75,000	1/8	L, U	T, Q, A, B	R	P	SHA, ULT
RBR56%75901#&	75,900	1/8	L, U	T, Q, A, B	R	P	SHA, ULT
RBR56%76802#&	76,800	1/8	L, U	T, Q, A, B	R	P	SHA, ULT

RBR56%77702#&	77,700	1/8	L, U	T, Q, A, B	R	P	SHA, ULT
RBR56%78702#&	78,700	1/8	L, U	T, Q, A, B	R	P	SHA, ULT
RBR56%79602#&	79,600	1/8	L, U	T, Q, A, B	R	P	SHA, ULT
RBR56%80602#&	80,600	1/8	L, U	T, Q, A, B	R	P	SHA, ULT
RBR56%81602#&	81,600	1/8	L, U	T, Q, A, B	R	P	SHA, ULT
RBR56%82502#&	82,500	1/8	L, U	T, Q, A, B	R	P	SHA, ULT
RBR56%83502#&	83,500	1/8	L, U	T, Q, A, B	R	P	SHA, ULT
RBR56%84502#&	84,500	1/8	L, U	T, Q, A, B	R	P	SHA, ULT
RBR56%85602#&	85,600	1/8	L, U	T, Q, A, B	R	P	SHA, ULT
RBR56%86602#&	86,600	1/8	L, U	T, Q, A, B	R	P	SHA, ULT
RBR56%87602#&	87,600	1/8	L, U	T, Q, A, B	R	P	SHA, ULT
RBR56%88702#&	88,700	1/8	L, U	T, Q, A, B	R	P	SHA, ULT
RBR56%89802#&	89,800	1/8	L, U	T, Q, A, B	R	P	SHA, ULT
RBR56%90902#&	90,900	1/8	L, U	T, Q, A, B	R	P	SHA, ULT
RBR56%92002#&	92,000	1/8	L, U	T, Q, A, B	R	P	SHA, ULT
RBR56%93102#&	93,100	1/8	L, U	T, Q, A, B	R	P	SHA, ULT
RBR56%94202#&	94,200	1/8	L, U	T, Q, A, B	R	P	SHA, ULT
RBR56%95302#&	95,300	1/8	L, U	T, Q, A, B	R	P	SHA, ULT
RBR56%96502#&	96,500	1/8	L, U	T, Q, A, B	R	P	SHA, ULT
RBR56%97602#&	97,600	1/8	L, U	T, Q, A, B	R	P	SHA, ULT
RBR56%98802#&	98,800	1/8	L, U	T, Q, A, B	R	P	SHA, ULT
RBR56%10002#&	100,000	1/8	L, U	T, Q, A, B	R	P	SHA, ULT
RBR56%10102#&	101,000	1/8	L, U	T, Q, A, B	R	P	SHA, ULT
RBR56%10202#&	102,000	1/8	L, U	T, Q, A, B	R	P	SHA, ULT
RBR56%10402#&	104,000	1/8	L, U	T, Q, A, B	R	P	SHA, ULT
RBR56%10502#&	105,000	1/8	L, U	T, Q, A, B	R	P	SHA, ULT
RBR56%10602#&	106,000	1/8	L, U	T, Q, A, B	R	P	SHA, ULT
RBR56%10702#&	107,000	1/8	L, U	T, Q, A, B	R	P	SHA, ULT
RBR56%10902#&	109,000	1/8	L, U	T, Q, A, B	R	P	SHA, ULT
RBR56%11002#&	110,000	1/8	L, U	T, Q, A, B	R	P	SHA, ULT
RBR56%11102#&	111,000	1/8	L, U	T, Q, A, B	R	P	SHA, ULT
RBR56%11302#&	113,000	1/8	L, U	T, Q, A, B	R	P	SHA, ULT
RBR56%11402#&	114,000	1/8	L, U	T, Q, A, B	R	P	SHA, ULT
RBR56%11502#&	115,000	1/8	L, U	T, Q, A, B	R	P	SHA, ULT
RBR56%11702#&	117,000	1/8	L, U	T, Q, A, B	R	P	SHA, ULT
RBR56%11802#&	118,000	1/8	L, U	T, Q, A, B	R	P	SHA, ULT
RBR56%12002#&	120,000	1/8	L, U	T, Q, A, B	R	P	SHA, ULT
RBR56%12102#&	121,000	1/8	L, U	T, Q, A, B	R	P	SHA, ULT
RBR56%12302#&	123,000	1/8	L, U	T, Q, A, B	R	P	SHA, ULT
RBR56%12402#&	124,000	1/8	L, U	T, Q, A, B	R	P	SHA, ULT
RBR56%12602#&	126,000	1/8	L, U	T, Q, A, B	R	P	SHA, ULT
RBR56%12702#&	127,000	1/8	L, U	T, Q, A, B	R	P	SHA, ULT
RBR56%12902#&	129,000	1/8	L, U	T, Q, A, B	R	P	SHA, ULT
RBR56%13002#&	130,000	1/8	L, U	T, Q, A, B	R	P	SHA, ULT
RBR56%13202#&	132,000	1/8	L, U	T, Q, A, B	R	P	SHA, ULT
RBR56%13302#&	133,000	1/8	L, U	T, Q, A, B	R	P	SHA, ULT
RBR56%13502#&	135,000	1/8	L, U	T, Q, A, B	R	P	SHA, ULT

RBR56%13702#&	137,000	1/8	L, U	T, Q, A, B	R	P	SHA, ULT
RBR56%13802#&	138,000	1/8	L, U	T, Q, A, B	R	P	SHA, ULT
RBR56%14002#&	140,000	1/8	L, U	T, Q, A, B	R	P	SHA, ULT
RBR56%14202#&	142,000	1/8	L, U	T, Q, A, B	R	P	SHA, ULT
RBR56%14302#&	143,000	1/8	L, U	T, Q, A, B	R	P	SHA, ULT
RBR56%14502#&	145,000	1/8	L, U	T, Q, A, B	R	P	SHA, ULT
RBR56%14702#&	147,000	1/8	L, U	T, Q, A, B	R	P	SHA, ULT
RBR56%14902#&	149,000	1/8	L, U	T, Q, A, B	R	P	SHA, ULT
RBR56%15002#&	150,000	1/8	L, U	T, Q, A, B	R	P	SHA, ULT
RBR56%15202#&	152,000	1/8	L, U	T, Q, A, B	R	P	SHA, ULT
RBR56%15402#&	154,000	1/8	L, U	T, Q, A, B	R	P	SHA, ULT
RBR56%15602#&	156,000	1/8	L, U	T, Q, A, B	R	P	SHA, ULT
RBR56%15802#&	158,000	1/8	L, U	T, Q, A, B	R	P	SHA, ULT
RBR56%16002#&	160,000	1/8	L, U	T, Q, A, B	R	P	SHA, ULT
RBR56%16202#&	162,000	1/8	L, U	T, Q, A, B	R	P	SHA, ULT
RBR56%16402#&	164,000	1/8	L, U	T, Q, A, B	R	P	SHA, ULT
RBR56%16502#&	165,000	1/8	L, U	T, Q, A, B	R	P	SHA, ULT
RBR56%16702#&	167,000	1/8	L, U	T, Q, A, B	R	P	SHA, ULT
RBR56%16902#&	169,000	1/8	L, U	T, Q, A, B	R	P	SHA, ULT
RBR56%17202#&	172,000	1/8	L, U	T, Q, A, B	R	P	SHA, ULT
RBR56%17402#&	174,000	1/8	L, U	T, Q, A, B	R	P	SHA, ULT
RBR56%17602#&	176,000	1/8	L, U	T, Q, A, B	R	P	SHA, ULT
RBR56%17802#&	178,000	1/8	L, U	T, Q, A, B	R	P	SHA, ULT
RBR56%18002#&	180,000	1/8	L, U	T, Q, A, B	R	P	SHA, ULT
RBR56%18202#&	182,000	1/8	L, U	T, Q, A, B	R	P	SHA, ULT
RBR56%18402#&	184,000	1/8	L, U	T, Q, A, B	R	P	SHA, ULT
RBR56%18702#&	187,000	1/8	L, U	T, Q, A, B	R	P	SHA, ULT
RBR56%18902#&	189,000	1/8	L, U	T, Q, A, B	R	P	SHA, ULT
RBR56%19102#&	191,000	1/8	L, U	T, Q, A, B	R	P	SHA, ULT
RBR56%19302#&	193,000	1/8	L, U	T, Q, A, B	R	P	SHA, ULT
RBR56%19602#&	196,000	1/8	L, U	T, Q, A, B	R	P	SHA, ULT
RBR56%19802#&	198,000	1/8	L, U	T, Q, A, B	R	P	SHA, ULT
RBR56%20002#&	200,000	1/8	L, U	T, Q, A, B	R	P	SHA, ULT
RBR56%20302#&	203,000	1/8	L, U	T, Q, A, B	R	P	SHA, ULT
RBR56%20502#&	205,000	1/8	L, U	T, Q, A, B	R	P	SHA, ULT
RBR56%20802#&	208,000	1/8	L, U	T, Q, A, B	R	P	SHA, ULT
RBR56%21002#&	210,000	1/8	L, U	T, Q, A, B	R	P	SHA, ULT
RBR56%21302#&	213,000	1/8	L, U	T, Q, A, B	R	P	SHA, ULT
RBR56%21502#&	215,000	1/8	L, U	T, Q, A, B	R	P	SHA, ULT
RBR56%21802#&	218,000	1/8	L, U	T, Q, A, B	R	P	SHA, ULT
RBR56%22102#&	221,000	1/8	L, U	T, Q, A, B	R	P	SHA, ULT

RBR56 RESISTORS DECADE BREAKDOWN

Click on the link below to see the associated parts selection listing:

Resistance Range
10.00 Ohms through 98.80 Ohms
100.0 Ohms through 988.0 Ohms
1,000 Ohms through 9,880 Ohms
10,000 Ohms through 98,800 Ohms
100,000 Ohms through 220,000 Ohms

RBR56 Wirewound Resistors: 10.00 Ohms through 98.80 Ohms

	Resistance	Power	Terminal	Resistance	Level 1	Level 2	
Part Number	Value (Ohms)	Rating (W)	Characteristic (#)	Tolerance (%)	(FRL)(&)	(FRL)(&)	Manufacturer
RBR56#10R00%&	10.00	1/8	L, U	T, Q, A, B	R	P	SHA
RBR56#10R10%&	10.10	1/8	L, U	T, Q, A, B	R	P	SHA
RBR56#10R20%&	10.20	1/8	L, U	T, Q, A, B	R	P	SHA
RBR56#10R40%&	10.40	1/8	L, U	T, Q, A, B	R	P	SHA
RBR56#10R50%&	10.50	1/8	L, U	T, Q, A, B	R	P	SHA
RBR56#10R60%&	10.60	1/8	L, U	T, Q, A, B	R	P	SHA
RBR56#10R70%&	10.70	1/8	L, U	T, Q, A, B	R	P	SHA
RBR56#10R90%&	10.90	1/8	L, U	T, Q, A, B	R	P	SHA
RBR56#11R00%&	11.00	1/8	L, U	T, Q, A, B	R	P	SHA
RBR56#11R10%&	11.10	1/8	L, U	T, Q, A, B	R	P	SHA
RBR56#11R30%&	11.30	1/8	L, U	T, Q, A, B	R	P	SHA
RBR56#11R40%&	11.40	1/8	L, U	T, Q, A, B	R	P	SHA
RBR56#11R50%&	11.50	1/8	L, U	T, Q, A, B	R	P	SHA
RBR56#11R70%&	11.70	1/8	L, U	T, Q, A, B	R	P	SHA
	Resistance	Power	Terminal	Resistance	Level 1	Level 2	
Part Number	Value (Ohms)	Rating (W)	Characteristic (#)	Tolerance (%)	(FRL)(&)	(FRL)(&)	Manufacturer
RBR56#11R80%&	11.80	1/8	L, U	T, Q, A, B	R	P	SHA
RBR56#12R00%&	12.00	1/8	L, U	T, Q, A, B	R	P	SHA
RBR56#12R10%&	12.10	1/8	L, U	T, Q, A, B	R	P	SHA
RBR56#12R30%&	12.30	1/8	L, U	T, Q, A, B	R	P	SHA
RBR56#12R40%&	12.40	1/8	L, U	T, Q, A, B	R	P	SHA
RBR56#12R60%&	12.60	1/8	L, U	T, Q, A, B	R	P	SHA
RBR56#12R70%&	12.70	1/8	L, U	T, Q, A, B	R	P	SHA
RBR56#12R90%&	12.90	1/8	L, U	T, Q, A, B	R	P	SHA
RBR56#13R00%&	13.00	1/8	L, U	T, Q, A, B	R	P	SHA
RBR56#13R20%&	13.20	1/8	L, U	T, Q, A, B	R	P	SHA
RBR56#13R30%&	13.30	1/8	L, U	T, Q, A, B	R	P	SHA
RBR56#13R50%&	13.50	1/8	L, U	T, Q, A, B	R	P	SHA
RBR56#13R70%&	13.70	1/8	L, U	T, Q, A, B	R	P	SHA
RBR56#13R80%&	13.80	1/8	L, U	T, Q, A, B	R	P	SHA
	Resistance	Power	Terminal	Resistance	Level 1	Level 2	
Part Number	Value (Ohms)	Rating (W)	Characteristic (#)	Tolerance (%)	(FRL)(&)	(FRL)(&)	Manufacturer
RBR56#14R00%&	14.00	1/8	L, U	T, Q, A, B	R	P	SHA
RBR56#14R20%&	14.20	1/8	L, U	T, Q, A, B	R	P	SHA

RBR56#14R30%&	14.30	1/8	L, U	T, Q, A, B	R	P	SHA
RBR56#14R50%&	14.50	1/8	L, U	T, Q, A, B	R	P	SHA
RBR56#14R70%&	14.70	1/8	L, U	T, Q, A, B	R	P	SHA
RBR56#14R90%&	14.90	1/8	L, U	T, Q, A, B	R	P	SHA
RBR56#15R00%&	15.00	1/8	L, U	T, Q, A, B	R	P	SHA
RBR56#15R20%&	15.20	1/8	L, U	T, Q, A, B	R	P	SHA
RBR56#15R40%&	15.40	1/8	L, U	T, Q, A, B	R	P	SHA
RBR56#15R60%&	15.60	1/8	L, U	T, Q, A, B	R	P	SHA
RBR56#15R80%&	15.80	1/8	L, U	T, Q, A, B	R	P	SHA
RBR56#16R00%&	16.00	1/8	L, U	T, Q, A, B	R	P	SHA
RBR56#16R20%&	16.20	1/8	L, U	T, Q, A, B	R	P	SHA
RBR56#16R40%&	16.40	1/8	L, U	T, Q, A, B	R	P	SHA
	Resistance	Power	Terminal	Resistance	Level 1	Level 2	
Part Number	Value (Ohms)	Rating (W)	Characteristic (#)	Tolerance (%)	(FRL)(&)	(FRL)(&)	Manufacturer
RBR56#16R50%&	16.50	1/8	L, U	T, Q, A, B	R	P	SHA
RBR56#16R70%&	16.70	1/8	L, U	T, Q, A, B	R	P	SHA
RBR56#16R90%&	16.90	1/8	L, U	T, Q, A, B	R	P	SHA
RBR56#17R20%&	17.20	1/8	L, U	T, Q, A, B	R	P	SHA
RBR56#17R40%&	17.40	1/8	L, U	T, Q, A, B	R	P	SHA
RBR56#17R60%&	17.60	1/8	L, U	T, Q, A, B	R	P	SHA
RBR56#17R80%&	17.80	1/8	L, U	T, Q, A, B	R	P	SHA
RBR56#18R00%&	18.00	1/8	L, U	T, Q, A, B	R	P	SHA
RBR56#18R20%&	18.20	1/8	L, U	T, Q, A, B	R	P	SHA
RBR56#18R40%&	18.40	1/8	L, U	T, Q, A, B	R	P	SHA
RBR56#18R70%&	18.70	1/8	L, U	T, Q, A, B	R	P	SHA
RBR56#18R90%&	18.90	1/8	L, U	T, Q, A, B	R	P	SHA
RBR56#19R10%&	19.10	1/8	L, U	T, Q, A, B	R	P	SHA
RBR56#19R30%&	19.30	1/8	L, U	T, Q, A, B	R	P	SHA
	Resistance	Power	Terminal	Resistance	Level 1	Level 2	
Part Number	Value (Ohms)	Rating (W)	Characteristic (#)	Tolerance (%)	(FRL)(&)	(FRL)(&)	Manufacturer
RBR56#19R60%&	19.60	1/8	L, U	T, Q, A, B	R	P	SHA
RBR56#19R80%&	19.80	1/8	L, U	T, Q, A, B	R	P	SHA
RBR56#20R00%&	20.00	1/8	L, U	T, Q, A, B	R	P	SHA
RBR56#20R30%&	20.30	1/8	L, U	T, Q, A, B	R	P	SHA
RBR56#20R50%&	20.50	1/8	L, U	T, Q, A, B	R	P	SHA
RBR56#20R80%&	20.80	1/8	L, U	T, Q, A, B	R	P	SHA
RBR56#21R00%&	21.00	1/8	L, U	T, Q, A, B	R	P	SHA
RBR56#21R30%&	21.30	1/8	L, U	T, Q, A, B	R	P	SHA
RBR56#21R50%&	21.50	1/8	L, U	T, Q, A, B	R	P	SHA
RBR56#21R80%&	21.80	1/8	L, U	T, Q, A, B	R	P	SHA
RBR56#22R10%&	22.10	1/8	L, U	T, Q, A, B	R	P	SHA
RBR56#22R30%&	22.30	1/8	L, U	T, Q, A, B	R	P	SHA
RBR56#22R60%&	22.60	1/8	L, U	T, Q, A, B	R	P	SHA
RBR56#22R90%&	22.90	1/8	L, U	T, Q, A, B	R	P	SHA
	Resistance	Power	Terminal	Resistance	Level 1	Level 2	
Part Number	Value (Ohms)	Rating (W)	Characteristic (#)	Tolerance (%)	(FRL)(&)	(FRL)(&)	Manufacturer
RBR56#23R20%&	23.20	1/8	L, U	T, Q, A, B	R	P	SHA

RBR56#23R40%&	23.40	1/8	L, U	T, Q, A, B	R	P	SHA
RBR56#23R70%&	23.70	1/8	L, U	T, Q, A, B	R	P	SHA
RBR56#24R00%&	24.00	1/8	L, U	T, Q, A, B	R	P	SHA
RBR56#24R30%&	24.30	1/8	L, U	T, Q, A, B	R	P	SHA
RBR56#24R60%&	24.60	1/8	L, U	T, Q, A, B	R	P	SHA
RBR56#24R90%&	24.90	1/8	L, U	T, Q, A, B	R	P	SHA
RBR56#25R20%&	25.20	1/8	L, U	T, Q, A, B	R	P	SHA
RBR56#25R50%&	25.50	1/8	L, U	T, Q, A, B	R	P	SHA
RBR56#25R80%&	25.80	1/8	L, U	T, Q, A, B	R	P	SHA
RBR56#26R10%&	26.10	1/8	L, U	T, Q, A, B	R	P	SHA
RBR56#26R40%&	26.40	1/8	L, U	T, Q, A, B	R	P	SHA
RBR56#26R70%&	26.70	1/8	L, U	T, Q, A, B	R	P	SHA
RBR56#27R10%&	27.10	1/8	L, U	T, Q, A, B	R	P	SHA
	Resistance	Power	Terminal	Resistance	Level 1	Level 2	
Part Number	Value (Ohms)	Rating (W)	Characteristic (#)	Tolerance (%)	(FRL)(&)	(FRL)(&)	Manufacturer
RBR56#27R40%&	27.40	1/8	L, U	T, Q, A, B	R	P	SHA
RBR56#27R70%&	27.70	1/8	L, U	T, Q, A, B	R	P	SHA
RBR56#28R00%&	28.00	1/8	L, U	T, Q, A, B	R	P	SHA
RBR56#28R40%&	28.40	1/8	L, U	T, Q, A, B	R	P	SHA
RBR56#28R70%&	28.70	1/8	L, U	T, Q, A, B	R	P	SHA
RBR56#29R10%&	29.10	1/8	L, U	T, Q, A, B	R	P	SHA
RBR56#29R40%&	29.40	1/8	L, U	T, Q, A, B	R	P	SHA
RBR56#29R80%&	29.80	1/8	L, U	T, Q, A, B	R	P	SHA
RBR56#30R10%&	30.10	1/8	L, U	T, Q, A, B	R	P	SHA
RBR56#30R50%&	30.50	1/8	L, U	T, Q, A, B	R	P	SHA
RBR56#30R90%&	30.90	1/8	L, U	T, Q, A, B	R	P	SHA
RBR56#31R20%&	31.20	1/8	L, U	T, Q, A, B	R	P	SHA
	Resistance	Power	Terminal	Resistance	Level 1	Level 2	
Part Number	Value (Ohms)	Rating (W)	Characteristic (#)	Tolerance (%)	(FRL)(&)	(FRL)(&)	Manufacturer
RBR56#31R60%&	31.60	1/8	L, U	T, Q, A, B	R	P	SHA
RBR56#32R00%&	32.00	1/8	L, U	T, Q, A, B	R	P	SHA
RBR56#32R40%&	32.40	1/8	L, U	T, Q, A, B	R	P	SHA
RBR56#32R80%&	32.80	1/8	L, U	T, Q, A, B	R	P	SHA
RBR56#33R20%&	33.20	1/8	L, U	T, Q, A, B	R	P	SHA
RBR56#33R60%&	33.60	1/8	L, U	T, Q, A, B	R	P	SHA
RBR56#34R00%&	34.00	1/8	L, U	T, Q, A, B	R	P	SHA
RBR56#34R40%&	34.40	1/8	L, U	T, Q, A, B	R	P	SHA
RBR56#34R80%&	34.80	1/8	L, U	T, Q, A, B	R	P	SHA
RBR56#35R20%&	35.20	1/8	L, U	T, Q, A, B	R	P	SHA
RBR56#35R70%&	35.70	1/8	L, U	T, Q, A, B	R	P	SHA
RBR56#36R10%&	36.10	1/8	L, U	T, Q, A, B	R	P	SHA
RBR56#36R50%&	36.50	1/8	L, U	T, Q, A, B	R	P	SHA
RBR56#37R00%&	37.00	1/8	L, U	T, Q, A, B	R	P	SHA
	Resistance	Power	Terminal	Resistance	Level 1	Level 2	
Part Number	Value (Ohms)	Rating (W)	Characteristic (#)	Tolerance (%)	(FRL)(&)	(FRL)(&)	Manufacturer
RBR56#37R40%&	37.40	1/8	L, U	T, Q, A, B	R	P	SHA
RBR56#37R90%&	37.90	1/8	L, U	T, Q, A, B	R	P	SHA

RBR56#38R30%&	38.30	1/8	L, U	T, Q, A, B	R	P	SHA
RBR56#38R80%&	38.80	1/8	L, U	T, Q, A, B	R	P	SHA
RBR56#39R20%&	39.20	1/8	L, U	T, Q, A, B	R	P	SHA
RBR56#39R70%&	39.70	1/8	L, U	T, Q, A, B	R	P	SHA
RBR56#40R20%&	40.20	1/8	L, U	T, Q, A, B	R	P	SHA
RBR56#40R70%&	40.70	1/8	L, U	T, Q, A, B	R	P	SHA
RBR56#41R20%&	41.20	1/8	L, U	T, Q, A, B	R	P	SHA
RBR56#41R70%&	41.70	1/8	L, U	T, Q, A, B	R	P	SHA
RBR56#42R20%&	42.20	1/8	L, U	T, Q, A, B	R	P	SHA
RBR56#42R70%&	42.70	1/8	L, U	T, Q, A, B	R	P	SHA
RBR56#43R20%&	43.20	1/8	L, U	T, Q, A, B	R	P	SHA
RBR56#43R70%&	43.70	1/8	L, U	T, Q, A, B	R	P	SHA
	Resistance	Power	Terminal	Resistance	Level 1	Level 2	
Part Number	Value (Ohms)	Rating (W)	Characteristic (#)	Tolerance (%)	(FRL)(&)	(FRL)(&)	Manufacturer
RBR56#44R20%&	44.20	1/8	L, U	T, Q, A, B	R	P	SHA
RBR56#44R80%&	44.80	1/8	L, U	T, Q, A, B	R	P	SHA
RBR56#45R30%&	45.30	1/8	L, U	T, Q, A, B	R	P	SHA
RBR56#45R90%&	45.90	1/8	L, U	T, Q, A, B	R	P	SHA
RBR56#46R40%&	46.40	1/8	L, U	T, Q, A, B	R	P	SHA
RBR56#47R00%&	47.00	1/8	L, U	T, Q, A, B	R	P	SHA
RBR56#47R50%&	47.50	1/8	L, U	T, Q, A, B	R	P	SHA
RBR56#48R10%&	48.10	1/8	L, U	T, Q, A, B	R	P	SHA
RBR56#48R70%&	48.70	1/8	L, U	T, Q, A, B	R	P	SHA
RBR56#49R30%&	49.30	1/8	L, U	T, Q, A, B	R	P	SHA
RBR56#49R90%&	49.90	1/8	L, U	T, Q, A, B	R	P	SHA
RBR56#50R50%&	50.50	1/8	L, U	T, Q, A, B	R	P	SHA
RBR56#51R10%&	51.10	1/8	L, U	T, Q, A, B	R	P	SHA
RBR56#51R70%&	51.70	1/8	L, U	T, Q, A, B	R	P	SHA
	Resistance	Power	Terminal	Resistance	Level 1	Level 2	
Part Number	Value (Ohms)	Rating (W)	Characteristic (#)	Tolerance (%)	(FRL)(&)	(FRL)(&)	Manufacturer
RBR56#52R30%&	52.30	1/8	L, U	T, Q, A, B	R	P	SHA
RBR56#53R00%&	53.00	1/8	L, U	T, Q, A, B	R	P	SHA
RBR56#53R60%&	53.60	1/8	L, U	T, Q, A, B	R	P	SHA
RBR56#54R20%&	54.20	1/8	L, U	T, Q, A, B	R	P	SHA
RBR56#54R90%&	54.90	1/8	L, U	T, Q, A, B	R	P	SHA
RBR56#55R60%&	55.60	1/8	L, U	T, Q, A, B	R	P	SHA
RBR56#56R20%&	56.20	1/8	L, U	T, Q, A, B	R	P	SHA
RBR56#56R90%&	56.90	1/8	L, U	T, Q, A, B	R	P	SHA
RBR56#57R60%&	57.60	1/8	L, U	T, Q, A, B	R	P	SHA
RBR56#58R30%&	58.30	1/8	L, U	T, Q, A, B	R	P	SHA
RBR56#59R00%&	59.00	1/8	L, U	T, Q, A, B	R	P	SHA
RBR56#59R70%&	59.70	1/8	L, U	T, Q, A, B	R	P	SHA
RBR56#60R40%&	60.40	1/8	L, U	T, Q, A, B	R	P	SHA
RBR56#61R20%&	61.20	1/8	L, U	T, Q, A, B	R	P	SHA
	Resistance	Power	Terminal	Resistance	Level 1	Level 2	
Part Number	Value (Ohms)	Rating (W)	Characteristic (#)	Tolerance (%)	(FRL)(&)	(FRL)(&)	Manufacturer
RBR56#61R90%&	61.90	1/8	L, U	T, Q, A, B	R	P	SHA

RBR56#62R60%&	62.60	1/8	L, U	T, Q, A, B	R	P	SHA
RBR56#63R40%&	63.40	1/8	L, U	T, Q, A, B	R	P	SHA
RBR56#64R20%&	64.20	1/8	L, U	T, Q, A, B	R	P	SHA
RBR56#64R90%&	64.90	1/8	L, U	T, Q, A, B	R	P	SHA
RBR56#65R70%&	65.70	1/8	L, U	T, Q, A, B	R	P	SHA
RBR56#66R50%&	66.50	1/8	L, U	T, Q, A, B	R	P	SHA
RBR56#67R30%&	67.30	1/8	L, U	T, Q, A, B	R	P	SHA
RBR56#68R10%&	68.10	1/8	L, U	T, Q, A, B	R	P	SHA
RBR56#69R00%&	69.00	1/8	L, U	T, Q, A, B	R	P	SHA
RBR56#69R80%&	69.80	1/8	L, U	T, Q, A, B	R	P	SHA
RBR56#70R60%&	70.60	1/8	L, U	T, Q, A, B	R	P	SHA
	Resistance	Power	Terminal	Resistance	Level 1	Level 2	
Part Number	Value (Ohms)	Rating (W)	Characteristic (#)	Tolerance (%)	(FRL)(&)	(FRL)(&)	Manufacturer
RBR56#71R50%&	71.50	1/8	L, U	T, Q, A, B	R	P	SHA
RBR56#72R30%&	72.30	1/8	L, U	T, Q, A, B	R	P	SHA
RBR56#73R20%&	73.20	1/8	L, U	T, Q, A, B	R	P	SHA
RBR56#74R10%&	74.10	1/8	L, U	T, Q, A, B	R	P	SHA
RBR56#75R00%&	75.00	1/8	L, U	T, Q, A, B	R	P	SHA
RBR56#75R90%&	75.90	1/8	L, U	T, Q, A, B	R	P	SHA
RBR56#76R80%&	76.80	1/8	L, U	T, Q, A, B	R	P	SHA
RBR56#77R70%&	77.70	1/8	L, U	T, Q, A, B	R	P	SHA
RBR56#78R70%&	78.70	1/8	L, U	T, Q, A, B	R	P	SHA
RBR56#79R60%&	79.60	1/8	L, U	T, Q, A, B	R	P	SHA
RBR56#80R60%&	80.60	1/8	L, U	T, Q, A, B	R	P	SHA
RBR56#81R60%&	81.60	1/8	L, U	T, Q, A, B	R	P	SHA
RBR56#82R50%&	82.50	1/8	L, U	T, Q, A, B	R	P	SHA
RBR56#83R50%&	83.50	1/8	L, U	T, Q, A, B	R	P	SHA
	Resistance	Power	Terminal	Resistance	Level 1	Level 2	
Part Number	Value (Ohms)	Rating (W)	Characteristic (#)	Tolerance (%)	(FRL)(&)	(FRL)(&)	Manufacturer
RBR56#84R50%&	84.50	1/8	L, U	T, Q, A, B	R	P	SHA
RBR56#85R60%&	85.60	1/8	L, U	T, Q, A, B	R	P	SHA
RBR56#86R60%&	86.60	1/8	L, U	T, Q, A, B	R	P	SHA
RBR56#87R60%&	87.60	1/8	L, U	T, Q, A, B	R	P	SHA
RBR56#88R70%&	88.70	1/8	L, U	T, Q, A, B	R	P	SHA
RBR56#89R80%&	89.80	1/8	L, U	T, Q, A, B	R	P	SHA
RBR56#90R90%&	90.90	1/8	L, U	T, Q, A, B	R	P	SHA
RBR56#92R00%&	92.00	1/8	L, U	T, Q, A, B	R	P	SHA
RBR56#93R10%&	93.10	1/8	L, U	T, Q, A, B	R	P	SHA
RBR56#94R20%&	94.20	1/8	L, U	T, Q, A, B	R	P	SHA
RBR56#95R30%&	95.30	1/8	L, U	T, Q, A, B	R	P	SHA
RBR56#96R50%&	96.50	1/8	L, U	T, Q, A, B	R	P	SHA
RBR56#97R60%&	97.60	1/8	L, U	T, Q, A, B	R	P	SHA
RBR56#98R80%&	98.80	1/8	L, U	T, Q, A, B	R	P	SHA
	Resistance	Power	Terminal	Resistance	Level 1	Level 2	
Part Number	Value (Ohms)	Rating (W)	Characteristic (#)	Tolerance (%)	(FRL)(&)	(FRL)(&)	Manufacturer

	Resistance	Power	Terminal	Resistance	Level 1	Level 2	
Part Number	Value (Ohms)	Rating (W)	Characteristic (#)	Tolerance (%)	(FRL)(&)	(FRL)(&)	Manufacturer
RBR56#100R0%&	100.0	1/8	L, U	T, Q, A, B	R	P	SHA
RBR56#101R0%&	101.0	1/8	L, U	T, Q, A, B	R	P	SHA
RBR56#102R0%&	102.0	1/8	L, U	T, Q, A, B	R	P	SHA
RBR56#104R0%&	104.0	1/8	L, U	T, Q, A, B	R	P	SHA
RBR56#105R0%&	105.0	1/8	L, U	T, Q, A, B	R	P	SHA
RBR56#106R0%&	106.0	1/8	L, U	T, Q, A, B	R	P	SHA
RBR56#107R0%&	107.0	1/8	L, U	T, Q, A, B	R	P	SHA
RBR56#109R0%&	109.0	1/8	L, U	T, Q, A, B	R	P	SHA
RBR56#110R0%&	110.0	1/8	L, U	T, Q, A, B	R	P	SHA
RBR56#111R0%&	111.0	1/8	L, U	T, Q, A, B	R	P	SHA
RBR56#113R0%&	113.0	1/8	L, U	T, Q, A, B	R	P	SHA
RBR56#114R0%&	114.0	1/8	L, U	T, Q, A, B	R	P	SHA
RBR56#115R0%&	115.0	1/8	L, U	T, Q, A, B	R	P	SHA
RBR56#117R0%&	117.0	1/8	L, U	T, Q, A, B	R	P	SHA
	Resistance	Power	Terminal	Resistance	Level 1	Level 2	
Part Number	Value (Ohms)	Rating (W)	Characteristic (#)	Tolerance (%)	(FRL)(&)	(FRL)(&)	Manufacturer
RBR56#118R0%&	118.0	1/8	L, U	T, Q, A, B	R	P	SHA
RBR56#120R0%&	120.0	1/8	L, U	T, Q, A, B	R	P	SHA
RBR56#121R0%&	121.0	1/8	L, U	T, Q, A, B	R	P	SHA
RBR56#123R0%&	123.0	1/8	L, U	T, Q, A, B	R	P	SHA
RBR56#124R0%&	124.0	1/8	L, U	T, Q, A, B	R	P	SHA
RBR56#126R0%&	126.0	1/8	L, U	T, Q, A, B	R	P	SHA
RBR56#127R0%&	127.0	1/8	L, U	T, Q, A, B	R	P	SHA
RBR56#129R0%&	129.0	1/8	L, U	T, Q, A, B	R	P	SHA
RBR56#130R0%&	130.0	1/8	L, U	T, Q, A, B	R	P	SHA
RBR56#132R0%&	132.0	1/8	L, U	T, Q, A, B	R	P	SHA
RBR56#133R0%&	133.0	1/8	L, U	T, Q, A, B	R	P	SHA
RBR56#135R0%&	135.0	1/8	L, U	T, Q, A, B	R	P	SHA
RBR56#137R0%&	137.0	1/8	L, U	T, Q, A, B	R	P	SHA
RBR56#138R0%&	138.0	1/8	L, U	T, Q, A, B	R	P	SHA
	Resistance	Power	Terminal	Resistance	Level 1	Level 2	
Part Number	Value (Ohms)	Rating (W)	Characteristic (#)	Tolerance (%)	(FRL)(&)	(FRL)(&)	Manufacturer
RBR56#140R0%&	140.0	1/8	L, U	T, Q, A, B	R	P	SHA
RBR56#142R0%&	142.0	1/8	L, U	T, Q, A, B	R	P	SHA
RBR56#143R0%&	143.0	1/8	L, U	T, Q, A, B	R	P	SHA
RBR56#145R0%&	145.0	1/8	L, U	T, Q, A, B	R	P	SHA
RBR56#147R0%&	147.0	1/8	L, U	T, Q, A, B	R	P	SHA
RBR56#149R0%&	149.0	1/8	L, U	T, Q, A, B	R	P	SHA
RBR56#150R0%&	150.0	1/8	L, U	T, Q, A, B	R	P	SHA
RBR56#152R0%&	152.0	1/8	L, U	T, Q, A, B	R	P	SHA
RBR56#154R0%&	154.0	1/8	L, U	T, Q, A, B	R	P	SHA
RBR56#156R0%&	156.0	1/8	L, U	T, Q, A, B	R	P	SHA

RBR56#158R0%&	158.0	1/8	L, U	T, Q, A, B	R	P	SHA
RBR56#160R0%&	160.0	1/8	L, U	T, Q, A, B	R	P	SHA
RBR56#162R0%&	162.0	1/8	L, U	T, Q, A, B	R	P	SHA
RBR56#164R0%&	164.0	1/8	L, U	T, Q, A, B	R	P	SHA
	Resistance	Power	Terminal	Resistance	Level 1	Level 2	
Part Number	Value (Ohms)	Rating (W)	Characteristic (#)	Tolerance (%)	(FRL)(&)	(FRL)(&)	Manufacturer
RBR56#165R0%&	165.0	1/8	L, U	T, Q, A, B	R	P	SHA
RBR56#167R0%&	167.0	1/8	L, U	T, Q, A, B	R	P	SHA
RBR56#169R0%&	169.0	1/8	L, U	T, Q, A, B	R	P	SHA
RBR56#172R0%&	172.0	1/8	L, U	T, Q, A, B	R	P	SHA
RBR56#174R0%&	174.0	1/8	L, U	T, Q, A, B	R	P	SHA
RBR56#176R0%&	176.0	1/8	L, U	T, Q, A, B	R	P	SHA
RBR56#178R0%&	178.0	1/8	L, U	T, Q, A, B	R	P	SHA
RBR56#180R0%&	180.0	1/8	L, U	T, Q, A, B	R	P	SHA
RBR56#182R0%&	182.0	1/8	L, U	T, Q, A, B	R	P	SHA
RBR56#184R0%&	184.0	1/8	L, U	T, Q, A, B	R	P	SHA
RBR56#187R0%&	187.0	1/8	L, U	T, Q, A, B	R	P	SHA
RBR56#189R0%&	189.0	1/8	L, U	T, Q, A, B	R	P	SHA
RBR56#191R0%&	191.0	1/8	L, U	T, Q, A, B	R	P	SHA
RBR56#193R0%&	193.0	1/8	L, U	T, Q, A, B	R	P	SHA
	Resistance	Power	Terminal	Resistance	Level 1	Level 2	
Part Number	Value (Ohms)	Rating (W)	Characteristic (#)	Tolerance (%)	(FRL)(&)	(FRL)(&)	Manufacturer
RBR56#196R0%&	196.0	1/8	L, U	T, Q, A, B	R	P	SHA
RBR56#198R0%&	198.0	1/8	L, U	T, Q, A, B	R	P	SHA
RBR56#200R0%&	200.0	1/8	L, U	T, Q, A, B	R	P	SHA
RBR56#203R0%&	203.0	1/8	L, U	T, Q, A, B	R	P	SHA
RBR56#205R0%&	205.0	1/8	L, U	T, Q, A, B	R	P	SHA
RBR56#208R0%&	208.0	1/8	L, U	T, Q, A, B	R	P	SHA
RBR56#210R0%&	210.0	1/8	L, U	T, Q, A, B	R	P	SHA
RBR56#213R0%&	213.0	1/8	L, U	T, Q, A, B	R	P	SHA
RBR56#215R0%&	215.0	1/8	L, U	T, Q, A, B	R	P	SHA
RBR56#218R0%&	218.0	1/8	L, U	T, Q, A, B	R	P	SHA
RBR56#221R0%&	221.0	1/8	L, U	T, Q, A, B	R	P	SHA
RBR56#223R0%&	223.0	1/8	L, U	T, Q, A, B	R	P	SHA
RBR56#226R0%&	226.0	1/8	L, U	T, Q, A, B	R	P	SHA
RBR56#229R0%&	229.0	1/8	L, U	T, Q, A, B	R	P	SHA
	Resistance	Power	Terminal	Resistance	Level 1	Level 2	
Part Number	Value (Ohms)	Rating (W)	Characteristic (#)	Tolerance (%)	(FRL)(&)	(FRL)(&)	Manufacturer
RBR56#232R0%&	232.0	1/8	L, U	T, Q, A, B	R	P	SHA
RBR56#234R0%&	234.0	1/8	L, U	T, Q, A, B	R	P	SHA
RBR56#237R0%&	237.0	1/8	L, U	T, Q, A, B	R	P	SHA
RBR56#240R0%&	240.0	1/8	L, U	T, Q, A, B	R	P	SHA
RBR56#243R0%&	243.0	1/8	L, U	T, Q, A, B	R	P	SHA
RBR56#246R0%&	246.0	1/8	L, U	T, Q, A, B	R	P	SHA
RBR56#249R0%&	249.0	1/8	L, U	T, Q, A, B	R	P	SHA
RBR56#252R0%&	252.0	1/8	L, U	T, Q, A, B	R	P	SHA
RBR56#255R0%&	255.0	1/8	L, U	T, Q, A, B	R	P	SHA

RBR56#258R0%&	258.0	1/8	L, U	T, Q, A, B	R	P	SHA
RBR56#261R0%&	261.0	1/8	L, U	T, Q, A, B	R	P	SHA
RBR56#264R0%&	264.0	1/8	L, U	T, Q, A, B	R	P	SHA
RBR56#267R0%&	267.0	1/8	L, U	T, Q, A, B	R	P	SHA
RBR56#271R0%&	271.0	1/8	L, U	T, Q, A, B	R	P	SHA
	Resistance	Power	Terminal	Resistance	Level 1	Level 2	
Part Number	Value (Ohms)	Rating (W)	Characteristic (#)	Tolerance (%)	(FRL)(&)	(FRL)(&)	Manufacturer
RBR56#274R0%&	274.0	1/8	L, U	T, Q, A, B	R	P	SHA
RBR56#277R0%&	277.0	1/8	L, U	T, Q, A, B	R	P	SHA
RBR56#280R0%&	280.0	1/8	L, U	T, Q, A, B	R	P	SHA
RBR56#284R0%&	284.0	1/8	L, U	T, Q, A, B	R	P	SHA
RBR56#287R0%&	287.0	1/8	L, U	T, Q, A, B	R	P	SHA
RBR56#291R0%&	291.0	1/8	L, U	T, Q, A, B	R	P	SHA
RBR56#294R0%&	294.0	1/8	L, U	T, Q, A, B	R	P	SHA
RBR56#298R0%&	298.0	1/8	L, U	T, Q, A, B	R	P	SHA
RBR56#301R0%&	301.0	1/8	L, U	T, Q, A, B	R	P	SHA
RBR56#305R0%&	305.0	1/8	L, U	T, Q, A, B	R	P	SHA
RBR56#309R0%&	309.0	1/8	L, U	T, Q, A, B	R	P	SHA
RBR56#312R0%&	312.0	1/8	L, U	T, Q, A, B	R	P	SHA
	Resistance	Power	Terminal	Resistance	Level 1	Level 2	
Part Number	Value (Ohms)	Rating (W)	Characteristic (#)	Tolerance (%)	(FRL)(&)	(FRL)(&)	Manufacturer
RBR56#316R0%&	316.0	1/8	L, U	T, Q, A, B	R	P	SHA
RBR56#320R0%&	320.0	1/8	L, U	T, Q, A, B	R	P	SHA
RBR56#324R0%&	324.0	1/8	L, U	T, Q, A, B	R	P	SHA
RBR56#328R0%&	328.0	1/8	L, U	T, Q, A, B	R	P	SHA
RBR56#332R0%&	332.0	1/8	L, U	T, Q, A, B	R	P	SHA
RBR56#336R0%&	336.0	1/8	L, U	T, Q, A, B	R	P	SHA
RBR56#340R0%&	340.0	1/8	L, U	T, Q, A, B	R	P	SHA
RBR56#344R0%&	344.0	1/8	L, U	T, Q, A, B	R	P	SHA
RBR56#348R0%&	348.0	1/8	L, U	T, Q, A, B	R	P	SHA
RBR56#352R0%&	352.0	1/8	L, U	T, Q, A, B	R	P	SHA
RBR56#357R0%&	357.0	1/8	L, U	T, Q, A, B	R	P	SHA
RBR56#361R0%&	361.0	1/8	L, U	T, Q, A, B	R	P	SHA
RBR56#365R0%&	365.0	1/8	L, U	T, Q, A, B	R	P	SHA
RBR56#370R0%&	370.0	1/8	L, U	T, Q, A, B	R	P	SHA
	Resistance	Power	Terminal	Resistance	Level 1	Level 2	
Part Number	Value (Ohms)	Rating (W)	Characteristic (#)	Tolerance (%)	(FRL)(&)	(FRL)(&)	Manufacturer
RBR56#374R0%&	374.0	1/8	L, U	T, Q, A, B	R	P	SHA
RBR56#379R0%&	379.0	1/8	L, U	T, Q, A, B	R	P	SHA
RBR56#383R0%&	383.0	1/8	L, U	T, Q, A, B	R	P	SHA
RBR56#388R0%&	388.0	1/8	L, U	T, Q, A, B	R	P	SHA
RBR56#392R0%&	392.0	1/8	L, U	T, Q, A, B	R	P	SHA
RBR56#397R0%&	397.0	1/8	L, U	T, Q, A, B	R	P	SHA
RBR56#402R0%&	402.0	1/8	L, U	T, Q, A, B	R	P	SHA
RBR56#407R0%&	407.0	1/8	L, U	T, Q, A, B	R	P	SHA
RBR56#412R0%&	412.0	1/8	L, U	T, Q, A, B	R	P	SHA
RBR56#417R0%&	417.0	1/8	L, U	T, Q, A, B	R	P	SHA

RBR56#422R0%&	422.0	1/8	L, U	T, Q, A, B	R	P	SHA
RBR56#427R0%&	427.0	1/8	L, U	T, Q, A, B	R	P	SHA
RBR56#432R0%&	432.0	1/8	L, U	T, Q, A, B	R	P	SHA
RBR56#437R0%&	437.0	1/8	L, U	T, Q, A, B	R	P	SHA
	Resistance	Power	Terminal	Resistance	Level 1	Level 2	
Part Number	Value (Ohms)	Rating (W)	Characteristic (#)	Tolerance (%)	(FRL)(&)	(FRL)(&)	Manufacturer
RBR56#442R0%&	442.0	1/8	L, U	T, Q, A, B	R	P	SHA
RBR56#448R0%&	448.0	1/8	L, U	T, Q, A, B	R	P	SHA
RBR56#453R0%&	453.0	1/8	L, U	T, Q, A, B	R	P	SHA
RBR56#459R0%&	459.0	1/8	L, U	T, Q, A, B	R	P	SHA
RBR56#464R0%&	464.0	1/8	L, U	T, Q, A, B	R	P	SHA
RBR56#470R0%&	470.0	1/8	L, U	T, Q, A, B	R	P	SHA
RBR56#475R0%&	475.0	1/8	L, U	T, Q, A, B	R	P	SHA
RBR56#481R0%&	481.0	1/8	L, U	T, Q, A, B	R	P	SHA
RBR56#487R0%&	487.0	1/8	L, U	T, Q, A, B	R	P	SHA
RBR56#493R0%&	493.0	1/8	L, U	T, Q, A, B	R	P	SHA
RBR56#499R0%&	499.0	1/8	L, U	T, Q, A, B	R	P	SHA
RBR56#505R0%&	505.0	1/8	L, U	T, Q, A, B	R	P	SHA
RBR56#511R0%&	511.0	1/8	L, U	T, Q, A, B	R	P	SHA
RBR56#517R0%&	517.0	1/8	L, U	T, Q, A, B	R	P	SHA
	Resistance	Power	Terminal	Resistance	Level 1	Level 2	
Part Number	Value (Ohms)	Rating (W)	Characteristic (#)	Tolerance (%)	(FRL)(&)	(FRL)(&)	Manufacturer
RBR56#523R0%&	523.0	1/8	L, U	T, Q, A, B	R	P	SHA
RBR56#530R0%&	530.0	1/8	L, U	T, Q, A, B	R	P	SHA
RBR56#536R0%&	536.0	1/8	L, U	T, Q, A, B	R	P	SHA
RBR56#542R0%&	542.0	1/8	L, U	T, Q, A, B	R	P	SHA
RBR56#549R0%&	549.0	1/8	L, U	T, Q, A, B	R	P	SHA
RBR56#556R0%&	556.0	1/8	L, U	T, Q, A, B	R	P	SHA
RBR56#562R0%&	562.0	1/8	L, U	T, Q, A, B	R	P	SHA
RBR56#569R0%&	569.0	1/8	L, U	T, Q, A, B	R	P	SHA
RBR56#576R0%&	576.0	1/8	L, U	T, Q, A, B	R	P	SHA
RBR56#583R0%&	583.0	1/8	L, U	T, Q, A, B	R	P	SHA
RBR56#590R0%&	590.0	1/8	L, U	T, Q, A, B	R	P	SHA
RBR56#597R0%&	597.0	1/8	L, U	T, Q, A, B	R	P	SHA
RBR56#604R0%&	604.0	1/8	L, U	T, Q, A, B	R	P	SHA
RBR56#612R0%&	612.0	1/8	L, U	T, Q, A, B	R	P	SHA
	Resistance	Power	Terminal	Resistance	Level 1	Level 2	
Part Number	Value (Ohms)	Rating (W)	Characteristic (#)	Tolerance (%)	(FRL)(&)	(FRL)(&)	Manufacturer
RBR56#619R0%&	619.0	1/8	L, U	T, Q, A, B	R	P	SHA
RBR56#626R0%&	626.0	1/8	L, U	T, Q, A, B	R	P	SHA
RBR56#634R0%&	634.0	1/8	L, U	T, Q, A, B	R	P	SHA
RBR56#642R0%&	642.0	1/8	L, U	T, Q, A, B	R	P	SHA
RBR56#649R0%&	649.0	1/8	L, U	T, Q, A, B	R	P	SHA
RBR56#657R0%&	657.0	1/8	L, U	T, Q, A, B	R	P	SHA
RBR56#665R0%&	665.0	1/8	L, U	T, Q, A, B	R	P	SHA
RBR56#673R0%&	673.0	1/8	L, U	T, Q, A, B	R	P	SHA
RBR56#681R0%&	681.0	1/8	L, U	T, Q, A, B	R	P	SHA

RBR56#690R0%&	690.0	1/8	L, U	T, Q, A, B	R	P	SHA
RBR56#698R0%&	698.0	1/8	L, U	T, Q, A, B	R	P	SHA
RBR56#706R0%&	706.0	1/8	L, U	T, Q, A, B	R	P	SHA
	Resistance	Power	Terminal	Resistance	Level 1	Level 2	
Part Number	Value (Ohms)	Rating (W)	Characteristic (#)	Tolerance (%)	(FRL)(&)	(FRL)(&)	Manufacturer
RBR56#715R0%&	715.0	1/8	L, U	T, Q, A, B	R	P	SHA
RBR56#723R0%&	723.0	1/8	L, U	T, Q, A, B	R	P	SHA
RBR56#732R0%&	732.0	1/8	L, U	T, Q, A, B	R	P	SHA
RBR56#741R0%&	741.0	1/8	L, U	T, Q, A, B	R	P	SHA
RBR56#750R0%&	750.0	1/8	L, U	T, Q, A, B	R	P	SHA
RBR56#759R0%&	759.0	1/8	L, U	T, Q, A, B	R	P	SHA
RBR56#768R0%&	768.0	1/8	L, U	T, Q, A, B	R	P	SHA
RBR56#777R0%&	777.0	1/8	L, U	T, Q, A, B	R	P	SHA
RBR56#787R0%&	787.0	1/8	L, U	T, Q, A, B	R	P	SHA
RBR56#796R0%&	796.0	1/8	L, U	T, Q, A, B	R	P	SHA
RBR56#806R0%&	806.0	1/8	L, U	T, Q, A, B	R	P	SHA
RBR56#816R0%&	816.0	1/8	L, U	T, Q, A, B	R	P	SHA
RBR56#825R0%&	825.0	1/8	L, U	T, Q, A, B	R	P	SHA
RBR56#835R0%&	835.0	1/8	L, U	T, Q, A, B	R	P	SHA
	Resistance	Power	Terminal	Resistance	Level 1	Level 2	
Part Number	Value (Ohms)	Rating (W)	Characteristic (#)	Tolerance (%)	(FRL)(&)	(FRL)(&)	Manufacturer
RBR56#845R0%&	845.0	1/8	L, U	T, Q, A, B	R	P	SHA
RBR56#856R0%&	856.0	1/8	L, U	T, Q, A, B	R	P	SHA
RBR56#866R0%&	866.0	1/8	L, U	T, Q, A, B	R	P	SHA
RBR56#876R0%&	876.0	1/8	L, U	T, Q, A, B	R	P	SHA
RBR56#887R0%&	887.0	1/8	L, U	T, Q, A, B	R	P	SHA
RBR56#898R0%&	898.0	1/8	L, U	T, Q, A, B	R	P	SHA
RBR56#909R0%&	909.0	1/8	L, U	T, Q, A, B	R	P	SHA
RBR56#920R0%&	920.0	1/8	L, U	T, Q, A, B	R	P	SHA
RBR56#931R0%&	931.0	1/8	L, U	T, Q, A, B	R	P	SHA
RBR56#942R0%&	942.0	1/8	L, U	T, Q, A, B	R	P	SHA
RBR56#953R0%&	953.0	1/8	L, U	T, Q, A, B	R	P	SHA
RBR56#965R0%&	965.0	1/8	L, U	T, Q, A, B	R	P	SHA
RBR56#976R0%&	976.0	1/8	L, U	T, Q, A, B	R	P	SHA
RBR56#988R0%&	988.0	1/8	L, U	T, Q, A, B	R	P	SHA
	Resistance	Power	Terminal	Resistance	Level 1	Level 2	
Part Number	Value (Ohms)	Rating (W)	Characteristic (#)	Tolerance (%)	(FRL)(&)	(FRL)(&)	Manufacturer

RBR56 Wirewound Resistors: 1,000 Ohms through 9,880 Ohms

	Resistance	Power	Terminal	Resistance	Level 1	Level 2	
Part Number	Value (Ohms)	Rating (W)	Characteristic (#)	Tolerance (%)	(FRL)(&)	(FRL)(&)	Manufacturer
RBR56#10000%&	1,000	1/8	L, U	T, Q, A, B	R	P	SHA
RBR56#10100%&	1,010	1/8	L, U	T, Q, A, B	R	P	SHA
RBR56#10200%&	1,020	1/8	L, U	T, Q, A, B	R	P	SHA

RBR56#10400%&	1,040	1/8	L, U	T, Q, A, B	R	P	SHA
RBR56#10500%&	1,050	1/8	L, U	T, Q, A, B	R	P	SHA
RBR56#10600%&	1,060	1/8	L, U	T, Q, A, B	R	P	SHA
RBR56#10700%&	1,070	1/8	L, U	T, Q, A, B	R	P	SHA
RBR56#10900%&	1,090	1/8	L, U	T, Q, A, B	R	P	SHA
RBR56#11000%&	1,100	1/8	L, U	T, Q, A, B	R	P	SHA
RBR56#11100%&	1,110	1/8	L, U	T, Q, A, B	R	P	SHA
RBR56#11300%&	1,130	1/8	L, U	T, Q, A, B	R	P	SHA
RBR56#11400%&	1,140	1/8	L, U	T, Q, A, B	R	P	SHA
RBR56#11500%&	1,150	1/8	L, U	T, Q, A, B	R	P	SHA
RBR56#11700%&	1,170	1/8	L, U	T, Q, A, B	R	P	SHA
	Resistance	Power	Terminal	Resistance	Level 1	Level 2	
Part Number	Value (Ohms)	Rating (W)	Characteristic (#)	Tolerance (%)	(FRL)(&)	(FRL)(&)	Manufacturer
RBR56#11800%&	1,180	1/8	L, U	T, Q, A, B	R	P	SHA
RBR56#12000%&	1,200	1/8	L, U	T, Q, A, B	R	P	SHA
RBR56#12100%&	1,210	1/8	L, U	T, Q, A, B	R	P	SHA
RBR56#12300%&	1,230	1/8	L, U	T, Q, A, B	R	P	SHA
RBR56#12400%&	1,240	1/8	L, U	T, Q, A, B	R	P	SHA
RBR56#12600%&	1,260	1/8	L, U	T, Q, A, B	R	P	SHA
RBR56#12700%&	1,270	1/8	L, U	T, Q, A, B	R	P	SHA
RBR56#12900%&	1,290	1/8	L, U	T, Q, A, B	R	P	SHA
RBR56#13000%&	1,300	1/8	L, U	T, Q, A, B	R	P	SHA
RBR56#13200%&	1,320	1/8	L, U	T, Q, A, B	R	P	SHA
RBR56#13300%&	1,330	1/8	L, U	T, Q, A, B	R	P	SHA
RBR56#13500%&	1,350	1/8	L, U	T, Q, A, B	R	P	SHA
RBR56#13700%&	1,370	1/8	L, U	T, Q, A, B	R	P	SHA
RBR56#13800%&	1,380	1/8	L, U	T, Q, A, B	R	P	SHA
	Resistance	Power	Terminal	Resistance	Level 1	Level 2	
Part Number	Value (Ohms)	Rating (W)	Characteristic (#)	Tolerance (%)	(FRL)(&)	(FRL)(&)	Manufacturer
RBR56#14000%&	1,400	1/8	L, U	T, Q, A, B	R	P	SHA
RBR56#14200%&	1,420	1/8	L, U	T, Q, A, B	R	P	SHA
RBR56#14300%&	1,430	1/8	L, U	T, Q, A, B	R	P	SHA
RBR56#14500%&	1,450	1/8	L, U	T, Q, A, B	R	P	SHA
RBR56#14700%&	1,470	1/8	L, U	T, Q, A, B	R	P	SHA
RBR56#14900%&	1,490	1/8	L, U	T, Q, A, B	R	P	SHA
RBR56#15000%&	1,500	1/8	L, U	T, Q, A, B	R	P	SHA
RBR56#15200%&	1,520	1/8	L, U	T, Q, A, B	R	P	SHA
RBR56#15400%&	1,540	1/8	L, U	T, Q, A, B	R	P	SHA
RBR56#15600%&	1,560	1/8	L, U	T, Q, A, B	R	P	SHA
RBR56#15800%&	1,580	1/8	L, U	T, Q, A, B	R	P	SHA
RBR56#16000%&	1,600	1/8	L, U	T, Q, A, B	R	P	SHA
RBR56#16200%&	1,620	1/8	L, U	T, Q, A, B	R	P	SHA
RBR56#16400%&	1,640	1/8	L, U	T, Q, A, B	R	P	SHA
	Resistance	Power	Terminal	Resistance	Level 1	Level 2	
Part Number	Value (Ohms)	Rating (W)	Characteristic (#)	Tolerance (%)	(FRL)(&)	(FRL)(&)	Manufacturer
RBR56#16500%&	1,650	1/8	L, U	T, Q, A, B	R	P	SHA
RBR56#16700%&	1,670	1/8	L, U	T, Q, A, B	R	P	SHA

RBR56#16900%&	1,690	1/8	L, U	T, Q, A, B	R	P	SHA
RBR56#17200%&	1,720	1/8	L, U	T, Q, A, B	R	P	SHA
RBR56#17400%&	1,740	1/8	L, U	T, Q, A, B	R	P	SHA
RBR56#17600%&	1,760	1/8	L, U	T, Q, A, B	R	P	SHA
RBR56#17800%&	1,780	1/8	L, U	T, Q, A, B	R	P	SHA
RBR56#18000%&	1,800	1/8	L, U	T, Q, A, B	R	P	SHA
RBR56#18200%&	1,820	1/8	L, U	T, Q, A, B	R	P	SHA
RBR56#18400%&	1,840	1/8	L, U	T, Q, A, B	R	P	SHA
RBR56#18700%&	1,870	1/8	L, U	T, Q, A, B	R	P	SHA
RBR56#18900%&	1,890	1/8	L, U	T, Q, A, B	R	P	SHA
RBR56#19100%&	1,910	1/8	L, U	T, Q, A, B	R	P	SHA
RBR56#19300%&	1,930	1/8	L, U	T, Q, A, B	R	P	SHA
	Resistance	Power	Terminal	Resistance	Level 1	Level 2	
Part Number	Value (Ohms)	Rating (W)	Characteristic (#)	Tolerance (%)	(FRL)(&)	(FRL)(&)	Manufacturer
RBR56#19600%&	1,960	1/8	L, U	T, Q, A, B	R	P	SHA
RBR56#19800%&	1,980	1/8	L, U	T, Q, A, B	R	P	SHA
RBR56#20000%&	2,000	1/8	L, U	T, Q, A, B	R	P	SHA
RBR56#20300%&	2,030	1/8	L, U	T, Q, A, B	R	P	SHA
RBR56#20500%&	2,050	1/8	L, U	T, Q, A, B	R	P	SHA
RBR56#20800%&	2,080	1/8	L, U	T, Q, A, B	R	P	SHA
RBR56#21000%&	2,100	1/8	L, U	T, Q, A, B	R	P	SHA
RBR56#21300%&	2,130	1/8	L, U	T, Q, A, B	R	P	SHA
RBR56#21500%&	2,150	1/8	L, U	T, Q, A, B	R	P	SHA
RBR56#21800%&	2,180	1/8	L, U	T, Q, A, B	R	P	SHA
RBR56#22100%&	2,210	1/8	L, U	T, Q, A, B	R	P	SHA
RBR56#22300%&	2,230	1/8	L, U	T, Q, A, B	R	P	SHA
RBR56#22600%&	2,260	1/8	L, U	T, Q, A, B	R	P	SHA
RBR56#22900%&	2,290	1/8	L, U	T, Q, A, B	R	P	SHA
	Resistance	Power	Terminal	Resistance	Level 1	Level 2	
Part Number	Value (Ohms)	Rating (W)	Characteristic (#)	Tolerance (%)	(FRL)(&)	(FRL)(&)	Manufacturer
RBR56#23200%&	2,320	1/8	L, U	T, Q, A, B	R	P	SHA
RBR56#23400%&	2,340	1/8	L, U	T, Q, A, B	R	P	SHA
RBR56#23700%&	2,370	1/8	L, U	T, Q, A, B	R	P	SHA
RBR56#24000%&	2,400	1/8	L, U	T, Q, A, B	R	P	SHA
RBR56#24300%&	2,430	1/8	L, U	T, Q, A, B	R	P	SHA
RBR56#24600%&	2,460	1/8	L, U	T, Q, A, B	R	P	SHA
RBR56#24900%&	2,490	1/8	L, U	T, Q, A, B	R	P	SHA
RBR56#25200%&	2,520	1/8	L, U	T, Q, A, B	R	P	SHA
RBR56#25500%&	2,550	1/8	L, U	T, Q, A, B	R	P	SHA
RBR56#25800%&	2,580	1/8	L, U	T, Q, A, B	R	P	SHA
RBR56#26100%&	2,610	1/8	L, U	T, Q, A, B	R	P	SHA
RBR56#26400%&	2,640	1/8	L, U	T, Q, A, B	R	P	SHA
RBR56#26700%&	2,670	1/8	L, U	T, Q, A, B	R	P	SHA
RBR56#27100%&	2,710	1/8	L, U	T, Q, A, B	R	P	SHA
	Resistance	Power	Terminal	Resistance	Level 1	Level 2	
Part Number	Value (Ohms)	Rating (W)	Characteristic (#)	Tolerance (%)	(FRL)(&)	(FRL)(&)	Manufacturer
RBR56#27400%&	2,740	1/8	L, U	T, Q, A, B	R	P	SHA

RBR56#27700%&	2,770	1/8	L, U	T, Q, A, B	R	P	SHA
RBR56#28000%&	2,800	1/8	L, U	T, Q, A, B	R	P	SHA
RBR56#28400%&	2,840	1/8	L, U	T, Q, A, B	R	P	SHA
RBR56#28700%&	2,870	1/8	L, U	T, Q, A, B	R	P	SHA
RBR56#29100%&	2,910	1/8	L, U	T, Q, A, B	R	P	SHA
RBR56#29400%&	2,940	1/8	L, U	T, Q, A, B	R	P	SHA
RBR56#29800%&	2,980	1/8	L, U	T, Q, A, B	R	P	SHA
RBR56#30100%&	3,010	1/8	L, U	T, Q, A, B	R	P	SHA
RBR56#30500%&	3,050	1/8	L, U	T, Q, A, B	R	P	SHA
RBR56#30900%&	3,090	1/8	L, U	T, Q, A, B	R	P	SHA
RBR56#31200%&	3,120	1/8	L, U	T, Q, A, B	R	P	SHA
RBR56#31600%&	3,160	1/8	L, U	T, Q, A, B	R	P	SHA
RBR56#32000%&	3,200	1/8	L, U	T, Q, A, B	R	P	SHA
	Resistance	Power	Terminal	Resistance	Level 1	Level 2	
Part Number	Value (Ohms)	Rating (W)	Characteristic (#)	Tolerance (%)	(FRL)(&)	(FRL)(&)	Manufacturer
RBR56#32400%&	3,240	1/8	L, U	T, Q, A, B	R	P	SHA
RBR56#32800%&	3,280	1/8	L, U	T, Q, A, B	R	P	SHA
RBR56#33200%&	3,320	1/8	L, U	T, Q, A, B	R	P	SHA
RBR56#33600%&	3,360	1/8	L, U	T, Q, A, B	R	P	SHA
RBR56#34000%&	3,400	1/8	L, U	T, Q, A, B	R	P	SHA
RBR56#34400%&	3,440	1/8	L, U	T, Q, A, B	R	P	SHA
RBR56#34800%&	3,480	1/8	L, U	T, Q, A, B	R	P	SHA
RBR56#35200%&	3,520	1/8	L, U	T, Q, A, B	R	P	SHA
RBR56#35700%&	3,570	1/8	L, U	T, Q, A, B	R	P	SHA
RBR56#36100%&	3,610	1/8	L, U	T, Q, A, B	R	P	SHA
RBR56#36500%&	3,650	1/8	L, U	T, Q, A, B	R	P	SHA
RBR56#37000%&	3,700	1/8	L, U	T, Q, A, B	R	P	SHA
	Resistance	Power	Terminal	Resistance	Level 1	Level 2	
Part Number	Value (Ohms)	Rating (W)	Characteristic (#)	Tolerance (%)	(FRL)(&)	(FRL)(&)	Manufacturer
RBR56#37400%&	3,740	1/8	L, U	T, Q, A, B	R	P	SHA
RBR56#37900%&	3,790	1/8	L, U	T, Q, A, B	R	P	SHA
RBR56#38300%&	3,830	1/8	L, U	T, Q, A, B	R	P	SHA
RBR56#38800%&	3,880	1/8	L, U	T, Q, A, B	R	P	SHA
RBR56#39200%&	3,920	1/8	L, U	T, Q, A, B	R	P	SHA
RBR56#39700%&	3,970	1/8	L, U	T, Q, A, B	R	P	SHA
RBR56#40200%&	4,020	1/8	L, U	T, Q, A, B	R	P	SHA
RBR56#40700%&	4,070	1/8	L, U	T, Q, A, B	R	P	SHA
RBR56#41200%&	4,120	1/8	L, U	T, Q, A, B	R	P	SHA
RBR56#41700%&	4,170	1/8	L, U	T, Q, A, B	R	P	SHA
RBR56#42200%&	4,220	1/8	L, U	T, Q, A, B	R	P	SHA
RBR56#42700%&	4,270	1/8	L, U	T, Q, A, B	R	P	SHA
RBR56#43200%&	4,320	1/8	L, U	T, Q, A, B	R	P	SHA
RBR56#43700%&	4,370	1/8	L, U	T, Q, A, B	R	P	SHA
	Resistance	Power	Terminal	Resistance	Level 1	Level 2	
Part Number	Value (Ohms)	Rating (W)	Characteristic (#)	Tolerance (%)	(FRL)(&)	(FRL)(&)	Manufacturer
RBR56#44200%&	4,420	1/8	L, U	T, Q, A, B	R	P	SHA
RBR56#44800%&	4,480	1/8	L, U	T, Q, A, B	R	P	SHA

RBR56#45300%&	4,530	1/8	L, U	T, Q, A, B	R	P	SHA
RBR56#45900%&	4,590	1/8	L, U	T, Q, A, B	R	P	SHA
RBR56#46400%&	4,640	1/8	L, U	T, Q, A, B	R	P	SHA
RBR56#47000%&	4,700	1/8	L, U	T, Q, A, B	R	P	SHA
RBR56#47500%&	4,750	1/8	L, U	T, Q, A, B	R	P	SHA
RBR56#48100%&	4,810	1/8	L, U	T, Q, A, B	R	P	SHA
RBR56#48700%&	4,870	1/8	L, U	T, Q, A, B	R	P	SHA
RBR56#49300%&	4,930	1/8	L, U	T, Q, A, B	R	P	SHA
RBR56#49900%&	4,990	1/8	L, U	T, Q, A, B	R	P	SHA
RBR56#50500%&	5,050	1/8	L, U	T, Q, A, B	R	P	SHA
RBR56#51100%&	5,110	1/8	L, U	T, Q, A, B	R	P	SHA
RBR56#51700%&	5,170	1/8	L, U	T, Q, A, B	R	P	SHA
	Resistance	Power	Terminal	Resistance	Level 1	Level 2	
Part Number	Value (Ohms)	Rating (W)	Characteristic (#)	Tolerance (%)	(FRL)(&)	(FRL)(&)	Manufacturer
RBR56#52300%&	5,230	1/8	L, U	T, Q, A, B	R	P	SHA
RBR56#53000%&	5,300	1/8	L, U	T, Q, A, B	R	P	SHA
RBR56#53600%&	5,360	1/8	L, U	T, Q, A, B	R	P	SHA
RBR56#54200%&	5,420	1/8	L, U	T, Q, A, B	R	P	SHA
RBR56#54900%&	5,490	1/8	L, U	T, Q, A, B	R	P	SHA
RBR56#55600%&	5,560	1/8	L, U	T, Q, A, B	R	P	SHA
RBR56#56200%&	5,620	1/8	L, U	T, Q, A, B	R	P	SHA
RBR56#56900%&	5,690	1/8	L, U	T, Q, A, B	R	P	SHA
RBR56#57600%&	5,760	1/8	L, U	T, Q, A, B	R	P	SHA
RBR56#58300%&	5,830	1/8	L, U	T, Q, A, B	R	P	SHA
RBR56#59000%&	5,900	1/8	L, U	T, Q, A, B	R	P	SHA
RBR56#59700%&	5,970	1/8	L, U	T, Q, A, B	R	P	SHA
RBR56#60400%&	6,040	1/8	L, U	T, Q, A, B	R	P	SHA
RBR56#61200%&	6,120	1/8	L, U	T, Q, A, B	R	P	SHA
	Resistance	Power	Terminal	Resistance	Level 1	Level 2	
Part Number	Value (Ohms)	Rating (W)	Characteristic (#)	Tolerance (%)	(FRL)(&)	(FRL)(&)	Manufacturer
RBR56#61900%&	6,190	1/8	L, U	T, Q, A, B	R	P	SHA
RBR56#62600%&	6,260	1/8	L, U	T, Q, A, B	R	P	SHA
RBR56#63400%&	6,340	1/8	L, U	T, Q, A, B	R	P	SHA
RBR56#64200%&	6,420	1/8	L, U	T, Q, A, B	R	P	SHA
RBR56#64900%&	6,490	1/8	L, U	T, Q, A, B	R	P	SHA
RBR56#65700%&	6,570	1/8	L, U	T, Q, A, B	R	P	SHA
RBR56#66500%&	6,650	1/8	L, U	T, Q, A, B	R	P	SHA
RBR56#67300%&	6,730	1/8	L, U	T, Q, A, B	R	P	SHA
RBR56#68100%&	6,810	1/8	L, U	T, Q, A, B	R	P	SHA
RBR56#69000%&	6,900	1/8	L, U	T, Q, A, B	R	P	SHA
RBR56#69800%&	6,980	1/8	L, U	T, Q, A, B	R	P	SHA
RBR56#70600%&	7,060	1/8	L, U	T, Q, A, B	R	P	SHA
RBR56#71500%&	7,150	1/8	L, U	T, Q, A, B	R	P	SHA
RBR56#72300%&	7,230	1/8	L, U	T, Q, A, B	R	P	SHA
	Resistance	Power	Terminal	Resistance	Level 1	Level 2	
Part Number	Value (Ohms)	Rating (W)	Characteristic (#)	Tolerance (%)	(FRL)(&)	(FRL)(&)	Manufacturer
RBR56#73200%&	7,320	1/8	L, U	T, Q, A, B	R	P	SHA

RBR56#74100%&	7,410	1/8	L, U	T, Q, A, B	R	P	SHA
RBR56#75000%&	7,500	1/8	L, U	T, Q, A, B	R	P	SHA
RBR56#75900%&	7,590	1/8	L, U	T, Q, A, B	R	P	SHA
RBR56#76800%&	7,680	1/8	L, U	T, Q, A, B	R	P	SHA
RBR56#77700%&	7,770	1/8	L, U	T, Q, A, B	R	P	SHA
RBR56#78700%&	7,870	1/8	L, U	T, Q, A, B	R	P	SHA
RBR56#79600%&	7,960	1/8	L, U	T, Q, A, B	R	P	SHA
RBR56#80600%&	8,060	1/8	L, U	T, Q, A, B	R	P	SHA
RBR56#81600%&	8,160	1/8	L, U	T, Q, A, B	R	P	SHA
RBR56#82500%&	8,250	1/8	L, U	T, Q, A, B	R	P	SHA
RBR56#83500%&	8,350	1/8	L, U	T, Q, A, B	R	P	SHA
	Resistance	Power	Terminal	Resistance	Level 1	Level 2	
Part Number	Value (Ohms)	Rating (W)	Characteristic (#)	Tolerance (%)	(FRL)(&)	(FRL)(&)	Manufacturer
RBR56#84500%&	8,450	1/8	L, U	T, Q, A, B	R	P	SHA
RBR56#85600%&	8,560	1/8	L, U	T, Q, A, B	R	P	SHA
RBR56#86600%&	8,660	1/8	L, U	T, Q, A, B	R	P	SHA
RBR56#87600%&	8,760	1/8	L, U	T, Q, A, B	R	P	SHA
RBR56#88700%&	8,870	1/8	L, U	T, Q, A, B	R	P	SHA
RBR56#89800%&	8,980	1/8	L, U	T, Q, A, B	R	P	SHA
RBR56#90900%&	9,090	1/8	L, U	T, Q, A, B	R	P	SHA
RBR56#92000%&	9,190	1/8	L, U	T, Q, A, B	R	P	SHA
RBR56#93100%&	9,310	1/8	L, U	T, Q, A, B	R	P	SHA
RBR56#94200%&	9,420	1/8	L, U	T, Q, A, B	R	P	SHA
RBR56#95300%&	9,530	1/8	L, U	T, Q, A, B	R	P	SHA
RBR56#96500%&	9,650	1/8	L, U	T, Q, A, B	R	P	SHA
RBR56#97600%&	9,760	1/8	L, U	T, Q, A, B	R	P	SHA
RBR56#98800%&	9,880	1/8	L, U	T, Q, A, B	R	P	SHA
	Resistance	Power	Terminal	Resistance	Level 1	Level 2	
Part Number	Value (Ohms)	Rating (W)	Characteristic (#)	Tolerance (%)	(FRL)(&)	(FRL)(&)	Manufacturer

RBR56 Wirewound Resistors: 10,000 Ohms through 98,800 Ohms

	Resistance	Power	Terminal	Resistance	Level 1	Level 2	
Part Number	Value (Ohms)	Rating (W)	Characteristic (#)	Tolerance (%)	(FRL)(&)	(FRL)(&)	Manufacturer
RBR56#10001%&	10,000	1/8	L, U	T, Q, A, B	R	P	SHA
RBR56#10101%&	10,100	1/8	L, U	T, Q, A, B	R	P	SHA
RBR56#10201%&	10,200	1/8	L, U	T, Q, A, B	R	P	SHA
RBR56#10401%&	10,400	1/8	L, U	T, Q, A, B	R	P	SHA
RBR56#10501%&	10,500	1/8	L, U	T, Q, A, B	R	P	SHA
RBR56#10601%&	10,600	1/8	L, U	T, Q, A, B	R	P	SHA
RBR56#10701%&	10,700	1/8	L, U	T, Q, A, B	R	P	SHA
RBR56#10901%&	10,900	1/8	L, U	T, Q, A, B	R	P	SHA
RBR56#11001%&	11,000	1/8	L, U	T, Q, A, B	R	P	SHA
RBR56#11101%&	11,100	1/8	L, U	T, Q, A, B	R	P	SHA
RBR56#11301%&	11,300	1/8	L, U	T, Q, A, B	R	P	SHA

RBR56#11401%&	11,400	1/8	L, U	T, Q, A, B	R	P	SHA
RBR56#11501%&	11,500	1/8	L, U	T, Q, A, B	R	P	SHA
RBR56#11701%&	11,700	1/8	L, U	T, Q, A, B	R	P	SHA
	Resistance	Power	Terminal	Resistance	Level 1	Level 2	
Part Number	Value (Ohms)	Rating (W)	Characteristic (#)	Tolerance (%)	(FRL)(&)	(FRL)(&)	Manufacturer
RBR56#11801%&	11,800	1/8	L, U	T, Q, A, B	R	P	SHA
RBR56#12001%&	12,000	1/8	L, U	T, Q, A, B	R	P	SHA
RBR56#12101%&	12,100	1/8	L, U	T, Q, A, B	R	P	SHA
RBR56#12301%&	12,300	1/8	L, U	T, Q, A, B	R	P	SHA
RBR56#12401%&	12,400	1/8	L, U	T, Q, A, B	R	P	SHA
RBR56#12601%&	12,600	1/8	L, U	T, Q, A, B	R	P	SHA
RBR56#12701%&	12,700	1/8	L, U	T, Q, A, B	R	P	SHA
RBR56#12901%&	12,900	1/8	L, U	T, Q, A, B	R	P	SHA
RBR56#13001%&	13,000	1/8	L, U	T, Q, A, B	R	P	SHA
RBR56#13201%&	13,200	1/8	L, U	T, Q, A, B	R	P	SHA
RBR56#13301%&	13,300	1/8	L, U	T, Q, A, B	R	P	SHA
RBR56#13501%&	13,500	1/8	L, U	T, Q, A, B	R	P	SHA
RBR56#13701%&	13,700	1/8	L, U	T, Q, A, B	R	P	SHA
RBR56#13801%&	13,800	1/8	L, U	T, Q, A, B	R	P	SHA
	Resistance	Power	Terminal	Resistance	Level 1	Level 2	
Part Number	Value (Ohms)	Rating (W)	Characteristic (#)	Tolerance (%)	(FRL)(&)	(FRL)(&)	Manufacturer
RBR56#14001%&	14,000	1/8	L, U	T, Q, A, B	R	P	SHA
RBR56#14201%&	14,200	1/8	L, U	T, Q, A, B	R	P	SHA
RBR56#14301%&	14,300	1/8	L, U	T, Q, A, B	R	P	SHA
RBR56#14501%&	14,500	1/8	L, U	T, Q, A, B	R	P	SHA
RBR56#14701%&	14,700	1/8	L, U	T, Q, A, B	R	P	SHA
RBR56#14901%&	14,900	1/8	L, U	T, Q, A, B	R	P	SHA
RBR56#15001%&	15,000	1/8	L, U	T, Q, A, B	R	P	SHA
RBR56#15201%&	15,200	1/8	L, U	T, Q, A, B	R	P	SHA
RBR56#15401%&	15,400	1/8	L, U	T, Q, A, B	R	P	SHA
RBR56#15601%&	15,600	1/8	L, U	T, Q, A, B	R	P	SHA
RBR56#15801%&	15,800	1/8	L, U	T, Q, A, B	R	P	SHA
RBR56#16001%&	16,000	1/8	L, U	T, Q, A, B	R	P	SHA
RBR56#16201%&	16,200	1/8	L, U	T, Q, A, B	R	P	SHA
RBR56#16401%&	16,400	1/8	L, U	T, Q, A, B	R	P	SHA
	Resistance	Power	Terminal	Resistance	Level 1	Level 2	
Part Number	Value (Ohms)	Rating (W)	Characteristic (#)	Tolerance (%)	(FRL)(&)	(FRL)(&)	Manufacturer
RBR56#16501%&	16,500	1/8	L, U	T, Q, A, B	R	P	SHA
RBR56#16701%&	16,700	1/8	L, U	T, Q, A, B	R	P	SHA
RBR56#16901%&	16,900	1/8	L, U	T, Q, A, B	R	P	SHA
RBR56#17201%&	17,200	1/8	L, U	T, Q, A, B	R	P	SHA
RBR56#17401%&	17,400	1/8	L, U	T, Q, A, B	R	P	SHA
RBR56#17601%&	17,600	1/8	L, U	T, Q, A, B	R	P	SHA
RBR56#17801%&	17,800	1/8	L, U	T, Q, A, B	R	P	SHA
RBR56#18001%&	18,000	1/8	L, U	T, Q, A, B	R	P	SHA
RBR56#18201%&	18,200	1/8	L, U	T, Q, A, B	R	P	SHA
RBR56#18401%&	18,400	1/8	L, U	T, Q, A, B	R	P	SHA

RBR56#18701%&	18,700	1/8	L, U	T, Q, A, B	R	P	SHA
RBR56#18901%&	18,900	1/8	L, U	T, Q, A, B	R	P	SHA
RBR56#19101%&	19,100	1/8	L, U	T, Q, A, B	R	P	SHA
RBR56#19301%&	19,300	1/8	L, U	T, Q, A, B	R	P	SHA
	Resistance	Power	Terminal	Resistance	Level 1	Level 2	
Part Number	Value (Ohms)	Rating (W)	Characteristic (#)	Tolerance (%)	(FRL)(&)	(FRL)(&)	Manufacturer
RBR56#19601%&	19,600	1/8	L, U	T, Q, A, B	R	P	SHA
RBR56#19801%&	19,800	1/8	L, U	T, Q, A, B	R	P	SHA
RBR56#20001%&	20,000	1/8	L, U	T, Q, A, B	R	P	SHA
RBR56#20301%&	20,300	1/8	L, U	T, Q, A, B	R	P	SHA
RBR56#20501%&	20,500	1/8	L, U	T, Q, A, B	R	P	SHA
RBR56#20801%&	20,800	1/8	L, U	T, Q, A, B	R	P	SHA
RBR56#21001%&	21,000	1/8	L, U	T, Q, A, B	R	P	SHA
RBR56#21301%&	21,300	1/8	L, U	T, Q, A, B	R	P	SHA
RBR56#21501%&	21,500	1/8	L, U	T, Q, A, B	R	P	SHA
RBR56#21801%&	21,800	1/8	L, U	T, Q, A, B	R	P	SHA
RBR56#22101%&	22,100	1/8	L, U	T, Q, A, B	R	P	SHA
RBR56#22301%&	22,300	1/8	L, U	T, Q, A, B	R	P	SHA
RBR56#22601%&	22,600	1/8	L, U	T, Q, A, B	R	P	SHA
RBR56#22901%&	22,900	1/8	L, U	T, Q, A, B	R	P	SHA
	Resistance	Power	Terminal	Resistance	Level 1	Level 2	
Part Number	Value (Ohms)	Rating (W)	Characteristic (#)	Tolerance (%)	(FRL)(&)	(FRL)(&)	Manufacturer
RBR56#23201%&	23,200	1/8	L, U	T, Q, A, B	R	P	SHA
RBR56#23401%&	23,400	1/8	L, U	T, Q, A, B	R	P	SHA
RBR56#23701%&	23,700	1/8	L, U	T, Q, A, B	R	P	SHA
RBR56#24001%&	24,000	1/8	L, U	T, Q, A, B	R	P	SHA
RBR56#24301%&	24,300	1/8	L, U	T, Q, A, B	R	P	SHA
RBR56#24601%&	24,600	1/8	L, U	T, Q, A, B	R	P	SHA
RBR56#24901%&	24,900	1/8	L, U	T, Q, A, B	R	P	SHA
RBR56#25201%&	25,200	1/8	L, U	T, Q, A, B	R	P	SHA
RBR56#25501%&	25,500	1/8	L, U	T, Q, A, B	R	P	SHA
RBR56#25801%&	25,800	1/8	L, U	T, Q, A, B	R	P	SHA
RBR56#26101%&	26,100	1/8	L, U	T, Q, A, B	R	P	SHA
RBR56#26401%&	26,400	1/8	L, U	T, Q, A, B	R	P	SHA
RBR56#26701%&	26,700	1/8	L, U	T, Q, A, B	R	P	SHA
RBR56#27101%&	27,100	1/8	L, U	T, Q, A, B	R	P	SHA
	Resistance	Power	Terminal	Resistance	Level 1	Level 2	
Part Number	Value (Ohms)	Rating (W)	Characteristic (#)	Tolerance (%)	(FRL)(&)	(FRL)(&)	Manufacturer
RBR56#27401%&	27,400	1/8	L, U	T, Q, A, B	R	P	SHA
RBR56#27701%&	27,700	1/8	L, U	T, Q, A, B	R	P	SHA
RBR56#28001%&	28,000	1/8	L, U	T, Q, A, B	R	P	SHA
RBR56#28401%&	28,400	1/8	L, U	T, Q, A, B	R	P	SHA
RBR56#28701%&	28,700	1/8	L, U	T, Q, A, B	R	P	SHA
RBR56#29101%&	29,100	1/8	L, U	T, Q, A, B	R	P	SHA
RBR56#29401%&	29,400	1/8	L, U	T, Q, A, B	R	P	SHA
RBR56#29801%&	29,800	1/8	L, U	T, Q, A, B	R	P	SHA
RBR56#30101%&	30,100	1/8	L, U	T, Q, A, B	R	P	SHA

RBR56#30501%&	30,500	1/8	L, U	T, Q, A, B	R	P	SHA
RBR56#30901%&	30,900	1/8	L, U	T, Q, A, B	R	P	SHA
RBR56#31201%&	31,200	1/8	L, U	T, Q, A, B	R	P	SHA
	Resistance	Power	Terminal	Resistance	Level 1	Level 2	
Part Number	Value (Ohms)	Rating (W)	Characteristic (#)	Tolerance (%)	(FRL)(&)	(FRL)(&)	Manufacturer
RBR56#31601%&	31,600	1/8	L, U	T, Q, A, B	R	P	SHA
RBR56#32001%&	32,000	1/8	L, U	T, Q, A, B	R	P	SHA
RBR56#32401%&	32,400	1/8	L, U	T, Q, A, B	R	P	SHA
RBR56#32801%&	32,800	1/8	L, U	T, Q, A, B	R	P	SHA
RBR56#33201%&	33,200	1/8	L, U	T, Q, A, B	R	P	SHA
RBR56#33601%&	33,600	1/8	L, U	T, Q, A, B	R	P	SHA
RBR56#34001%&	34,000	1/8	L, U	T, Q, A, B	R	P	SHA
RBR56#34401%&	34,400	1/8	L, U	T, Q, A, B	R	P	SHA
RBR56#34801%&	34,800	1/8	L, U	T, Q, A, B	R	P	SHA
RBR56#35201%&	35,200	1/8	L, U	T, Q, A, B	R	P	SHA
RBR56#35701%&	35,700	1/8	L, U	T, Q, A, B	R	P	SHA
RBR56#36101%&	36,100	1/8	L, U	T, Q, A, B	R	P	SHA
RBR56#36501%&	36,500	1/8	L, U	T, Q, A, B	R	P	SHA
RBR56#37001%&	37,000	1/8	L, U	T, Q, A, B	R	P	SHA
	Resistance	Power	Terminal	Resistance	Level 1	Level 2	
Part Number	Value (Ohms)	Rating (W)	Characteristic (#)	Tolerance (%)	(FRL)(&)	(FRL)(&)	Manufacturer
RBR56#37401%&	37,400	1/8	L, U	T, Q, A, B	R	P	SHA
RBR56#37901%&	37,900	1/8	L, U	T, Q, A, B	R	P	SHA
RBR56#38301%&	38,300	1/8	L, U	T, Q, A, B	R	P	SHA
RBR56#38801%&	38,800	1/8	L, U	T, Q, A, B	R	P	SHA
RBR56#39201%&	39,200	1/8	L, U	T, Q, A, B	R	P	SHA
RBR56#39701%&	39,700	1/8	L, U	T, Q, A, B	R	P	SHA
RBR56#40201%&	40,200	1/8	L, U	T, Q, A, B	R	P	SHA
RBR56#40701%&	40,700	1/8	L, U	T, Q, A, B	R	P	SHA
RBR56#41201%&	41,200	1/8	L, U	T, Q, A, B	R	P	SHA
RBR56#41701%&	41,700	1/8	L, U	T, Q, A, B	R	P	SHA
RBR56#42201%&	42,200	1/8	L, U	T, Q, A, B	R	P	SHA
RBR56#42701%&	42,700	1/8	L, U	T, Q, A, B	R	P	SHA
RBR56#43201%&	43,200	1/8	L, U	T, Q, A, B	R	P	SHA
RBR56#43701%&	43,700	1/8	L, U	T, Q, A, B	R	P	SHA
	Resistance	Power	Terminal	Resistance	Level 1	Level 2	
Part Number	Value (Ohms)	Rating (W)	Characteristic (#)	Tolerance (%)	(FRL)(&)	(FRL)(&)	Manufacturer
RBR56#44201%&	44,200	1/8	L, U	T, Q, A, B	R	P	SHA
RBR56#44801%&	44,800	1/8	L, U	T, Q, A, B	R	P	SHA
RBR56#45301%&	45,300	1/8	L, U	T, Q, A, B	R	P	SHA
RBR56#45901%&	45,900	1/8	L, U	T, Q, A, B	R	P	SHA
RBR56#46401%&	46,400	1/8	L, U	T, Q, A, B	R	P	SHA
RBR56#47001%&	47,000	1/8	L, U	T, Q, A, B	R	P	SHA
RBR56#47501%&	47,500	1/8	L, U	T, Q, A, B	R	P	SHA
RBR56#48101%&	48,100	1/8	L, U	T, Q, A, B	R	P	SHA
RBR56#48701%&	48,700	1/8	L, U	T, Q, A, B	R	P	SHA
RBR56#49301%&	49,300	1/8	L, U	T, Q, A, B	R	P	SHA

RBR56#49901%&	49,900	1/8	L, U	T, Q, A, B	R	P	SHA
RBR56#50501%&	50,500	1/8	L, U	T, Q, A, B	R	P	SHA
RBR56#51101%&	51,100	1/8	L, U	T, Q, A, B	R	P	SHA
RBR56#51701%&	51,700	1/8	L, U	T, Q, A, B	R	P	SHA
	Resistance	Power	Terminal	Resistance	Level 1	Level 2	
Part Number	Value (Ohms)	Rating (W)	Characteristic (#)	Tolerance (%)	(FRL)(&)	(FRL)(&)	Manufacturer
RBR56#52301%&	52,300	1/8	L, U	T, Q, A, B	R	P	SHA
RBR56#53001%&	53,000	1/8	L, U	T, Q, A, B	R	P	SHA
RBR56#53601%&	53,600	1/8	L, U	T, Q, A, B	R	P	SHA
RBR56#54201%&	54,200	1/8	L, U	T, Q, A, B	R	P	SHA
RBR56#54901%&	54,900	1/8	L, U	T, Q, A, B	R	P	SHA
RBR56#55601%&	55,600	1/8	L, U	T, Q, A, B	R	P	SHA
RBR56#56201%&	56,200	1/8	L, U	T, Q, A, B	R	P	SHA
RBR56#56901%&	56,900	1/8	L, U	T, Q, A, B	R	P	SHA
RBR56#57601%&	57,600	1/8	L, U	T, Q, A, B	R	P	SHA
RBR56#58301%&	58,300	1/8	L, U	T, Q, A, B	R	P	SHA
RBR56#59001%&	59,000	1/8	L, U	T, Q, A, B	R	P	SHA
RBR56#59701%&	59,700	1/8	L, U	T, Q, A, B	R	P	SHA
RBR56#60401%&	60,400	1/8	L, U	T, Q, A, B	R	P	SHA
RBR56#61201%&	61,200	1/8	L, U	T, Q, A, B	R	P	SHA
	Resistance	Power	Terminal	Resistance	Level 1	Level 2	
Part Number	Value (Ohms)	Rating (W)	Characteristic (#)	Tolerance (%)	(FRL)(&)	(FRL)(&)	Manufacturer
RBR56#61901%&	61,900	1/8	L, U	T, Q, A, B	R	P	SHA
RBR56#62601%&	62,600	1/8	L, U	T, Q, A, B	R	P	SHA
RBR56#63401%&	63,400	1/8	L, U	T, Q, A, B	R	P	SHA
RBR56#64201%&	64,200	1/8	L, U	T, Q, A, B	R	P	SHA
RBR56#64901%&	64,900	1/8	L, U	T, Q, A, B	R	P	SHA
RBR56#65701%&	65,700	1/8	L, U	T, Q, A, B	R	P	SHA
RBR56#66501%&	66,500	1/8	L, U	T, Q, A, B	R	P	SHA
RBR56#67301%&	67,300	1/8	L, U	T, Q, A, B	R	P	SHA
RBR56#68101%&	68,100	1/8	L, U	T, Q, A, B	R	P	SHA
RBR56#69001%&	69,000	1/8	L, U	T, Q, A, B	R	P	SHA
RBR56#69801%&	69,800	1/8	L, U	T, Q, A, B	R	P	SHA
RBR56#70601%&	70,600	1/8	L, U	T, Q, A, B	R	P	SHA
	Resistance	Power	Terminal	Resistance	Level 1	Level 2	
Part Number	Value (Ohms)	Rating (W)	Characteristic (#)	Tolerance (%)	(FRL)(&)	(FRL)(&)	Manufacturer
RBR56#71501%&	71,500	1/8	L, U	T, Q, A, B	R	P	SHA
RBR56#72301%&	72,300	1/8	L, U	T, Q, A, B	R	P	SHA
RBR56#73201%&	73,200	1/8	L, U	T, Q, A, B	R	P	SHA
RBR56#74101%&	74,100	1/8	L, U	T, Q, A, B	R	P	SHA
RBR56#75001%&	75,000	1/8	L, U	T, Q, A, B	R	P	SHA
RBR56#75901%&	75,900	1/8	L, U	T, Q, A, B	R	P	SHA
RBR56#76802%&	76,800	1/8	L, U	T, Q, A, B	R	P	SHA
RBR56#77702%&	77,700	1/8	L, U	T, Q, A, B	R	P	SHA
RBR56#78702%&	78,700	1/8	L, U	T, Q, A, B	R	P	SHA
RBR56#79602%&	79,600	1/8	L, U	T, Q, A, B	R	P	SHA
RBR56#80602%&	80,600	1/8	L, U	T, Q, A, B	R	P	SHA

RBR56#81602%&	81,600	1/8	L, U	T, Q, A, B	R	P	SHA
RBR56#82502%&	82,500	1/8	L, U	T, Q, A, B	R	P	SHA
RBR56#83502%&	83,500	1/8	L, U	T, Q, A, B	R	P	SHA
	Resistance	Power	Terminal	Resistance	Level 1	Level 2	
Part Number	Value (Ohms)	Rating (W)	Characteristic (#)	Tolerance (%)	(FRL)(&)	(FRL)(&)	Manufacturer
RBR56#84502%&	84,500	1/8	L, U	T, Q, A, B	R	P	SHA
RBR56#85602%&	85,600	1/8	L, U	T, Q, A, B	R	P	SHA
RBR56#86602%&	86,600	1/8	L, U	T, Q, A, B	R	P	SHA
RBR56#87602%&	87,600	1/8	L, U	T, Q, A, B	R	P	SHA
RBR56#88702%&	88,700	1/8	L, U	T, Q, A, B	R	P	SHA
RBR56#89802%&	89,800	1/8	L, U	T, Q, A, B	R	P	SHA
RBR56#90902%&	90,900	1/8	L, U	T, Q, A, B	R	P	SHA
RBR56#92002%&	92,000	1/8	L, U	T, Q, A, B	R	P	SHA
RBR56#93102%&	93,100	1/8	L, U	T, Q, A, B	R	P	SHA
RBR56#94202%&	94,200	1/8	L, U	T, Q, A, B	R	P	SHA
RBR56#95302%&	95,300	1/8	L, U	T, Q, A, B	R	P	SHA
RBR56#96502%&	96,500	1/8	L, U	T, Q, A, B	R	P	SHA
RBR56#97602%&	97,600	1/8	L, U	T, Q, A, B	R	P	SHA
RBR56#98802%&	98,800	1/8	L, U	T, Q, A, B	R	P	SHA
	Resistance	Power	Terminal	Resistance	Level 1	Level 2	
Part Number	Value (Ohms)	Rating (W)	Characteristic (#)	Tolerance (%)	(FRL)(&)	(FRL)(&)	Manufacturer

RBR56 Wirewound Resistors: 100,000 Ohms through 221,000 Ohms

	Resistance	Power	Terminal	Resistance	Level 1	Level 2	
Part Number	Value (Ohms)	Rating (W)	Characteristic (#)	Tolerance (%)	(FRL)(&)	(FRL)(&)	Manufacturer
RBR56#10002%&	100,000	1/8	L, U	T, Q, A, B	R	P	SHA
RBR56#10102%&	101,000	1/8	L, U	T, Q, A, B	R	P	SHA
RBR56#10202%&	102,000	1/8	L, U	T, Q, A, B	R	P	SHA
RBR56#10402%&	104,000	1/8	L, U	T, Q, A, B	R	P	SHA
RBR56#10502%&	105,000	1/8	L, U	T, Q, A, B	R	P	SHA
RBR56#10602%&	106,000	1/8	L, U	T, Q, A, B	R	P	SHA
RBR56#10702%&	107,000	1/8	L, U	T, Q, A, B	R	P	SHA
RBR56#10902%&	109,000	1/8	L, U	T, Q, A, B	R	P	SHA
RBR56#11002%&	110,000	1/8	L, U	T, Q, A, B	R	P	SHA
RBR56#11102%&	111,000	1/8	L, U	T, Q, A, B	R	P	SHA
RBR56#11302%&	113,000	1/8	L, U	T, Q, A, B	R	P	SHA
RBR56#11402%&	114,000	1/8	L, U	T, Q, A, B	R	P	SHA
RBR56#11502%&	115,000	1/8	L, U	T, Q, A, B	R	P	SHA
RBR56#11702%&	117,000	1/8	L, U	T, Q, A, B	R	P	SHA
	Resistance	Power	Terminal	Resistance	Level 1	Level 2	
Part Number	Value (Ohms)	Rating (W)	Characteristic (#)	Tolerance (%)	(FRL)(&)	(FRL)(&)	Manufacturer
RBR56#11802%&	118,000	1/8	L, U	T, Q, A, B	R	P	SHA
RBR56#12002%&	120,000	1/8	L, U	T, Q, A, B	R	P	SHA
RBR56#12102%&	121,000	1/8	L, U	T, Q, A, B	R	P	SHA

RBR56#12302%&	123,000	1/8	L, U	T, Q, A, B	R	P	SHA
RBR56#12402%&	124,000	1/8	L, U	T, Q, A, B	R	P	SHA
RBR56#12602%&	126,000	1/8	L, U	T, Q, A, B	R	P	SHA
RBR56#12702%&	127,000	1/8	L, U	T, Q, A, B	R	P	SHA
RBR56#12902%&	129,000	1/8	L, U	T, Q, A, B	R	P	SHA
RBR56#13002%&	130,000	1/8	L, U	T, Q, A, B	R	P	SHA
RBR56#13202%&	132,000	1/8	L, U	T, Q, A, B	R	P	SHA
RBR56#13302%&	133,000	1/8	L, U	T, Q, A, B	R	P	SHA
RBR56#13502%&	135,000	1/8	L, U	T, Q, A, B	R	P	SHA
RBR56#13702%&	137,000	1/8	L, U	T, Q, A, B	R	P	SHA
RBR56#13802%&	138,000	1/8	L, U	T, Q, A, B	R	P	SHA
	Resistance	Power	Terminal	Resistance	Level 1	Level 2	
Part Number	Value (Ohms)	Rating (W)	Characteristic (#)	Tolerance (%)	(FRL)(&)	(FRL)(&)	Manufacturer
RBR56#14002%&	140,000	1/8	L, U	T, Q, A, B	R	P	SHA
RBR56#14202%&	142,000	1/8	L, U	T, Q, A, B	R	P	SHA
RBR56#14302%&	143,000	1/8	L, U	T, Q, A, B	R	P	SHA
RBR56#14502%&	145,000	1/8	L, U	T, Q, A, B	R	P	SHA
RBR56#14702%&	147,000	1/8	L, U	T, Q, A, B	R	P	SHA
RBR56#14902%&	149,000	1/8	L, U	T, Q, A, B	R	P	SHA
RBR56#15002%&	150,000	1/8	L, U	T, Q, A, B	R	P	SHA
RBR56#15202%&	152,000	1/8	L, U	T, Q, A, B	R	P	SHA
RBR56#15402%&	154,000	1/8	L, U	T, Q, A, B	R	P	SHA
RBR56#15602%&	156,000	1/8	L, U	T, Q, A, B	R	P	SHA
RBR56#15802%&	158,000	1/8	L, U	T, Q, A, B	R	P	SHA
RBR56#16002%&	160,000	1/8	L, U	T, Q, A, B	R	P	SHA
RBR56#16202%&	162,000	1/8	L, U	T, Q, A, B	R	P	SHA
RBR56#16402%&	164,000	1/8	L, U	T, Q, A, B	R	P	SHA
	Resistance	Power	Terminal	Resistance	Level 1	Level 2	
Part Number	Value (Ohms)	Rating (W)	Characteristic (#)	Tolerance (%)	(FRL)(&)	(FRL)(&)	Manufacturer
RBR56#16502%&	165,000	1/8	L, U	T, Q, A, B	R	P	SHA
RBR56#16702%&	167,000	1/8	L, U	T, Q, A, B	R	P	SHA
RBR56#16902%&	169,000	1/8	L, U	T, Q, A, B	R	P	SHA
RBR56#17202%&	172,000	1/8	L, U	T, Q, A, B	R	P	SHA
RBR56#17402%&	174,000	1/8	L, U	T, Q, A, B	R	P	SHA
RBR56#17602%&	176,000	1/8	L, U	T, Q, A, B	R	P	SHA
RBR56#17802%&	178,000	1/8	L, U	T, Q, A, B	R	P	SHA
RBR56#18002%&	180,000	1/8	L, U	T, Q, A, B	R	P	SHA
RBR56#18202%&	182,000	1/8	L, U	T, Q, A, B	R	P	SHA
RBR56#18402%&	184,000	1/8	L, U	T, Q, A, B	R	P	SHA
RBR56#18702%&	187,000	1/8	L, U	T, Q, A, B	R	P	SHA
RBR56#18902%&	189,000	1/8	L, U	T, Q, A, B	R	P	SHA
RBR56#19102%&	191,000	1/8	L, U	T, Q, A, B	R	P	SHA
RBR56#19302%&	193,000	1/8	L, U	T, Q, A, B	R	P	SHA
	Resistance	Power	Terminal	Resistance	Level 1	Level 2	
Part Number	Value (Ohms)	Rating (W)	Characteristic (#)	Tolerance (%)	(FRL)(&)	(FRL)(&)	Manufacturer
RBR56#19602%&	196,000	1/8	L, U	T, Q, A, B	R	P	SHA
RBR56#19802%&	198,000	1/8	L, U	T, Q, A, B	R	P	SHA

RBR56#20002%&	200,000	1/8	L, U	T, Q, A, B	R	P	SHA
RBR56#20302%&	203,000	1/8	L, U	T, Q, A, B	R	P	SHA
RBR56#20502%&	205,000	1/8	L, U	T, Q, A, B	R	P	SHA
RBR56#20802%&	208,000	1/8	L, U	T, Q, A, B	R	P	SHA
RBR56#21002%&	210,000	1/8	L, U	T, Q, A, B	R	P	SHA
RBR56#21302%&	213,000	1/8	L, U	T, Q, A, B	R	P	SHA
RBR56#21502%&	215,000	1/8	L, U	T, Q, A, B	R	P	SHA
RBR56#21802%&	218,000	1/8	L, U	T, Q, A, B	R	P	SHA
RBR56#22102%&	221,000	1/8	L, U	T, Q, A, B	R	P	SHA
	Resistance	Power	Terminal	Resistance	Level 1	Level 2	
Part Number	Value (Ohms)	Rating (W)	Characteristic (#)	Tolerance (%)	(FRL)(&)	(FRL)(&)	Manufacturer

RBR57 Wirewound Resistors

	Resistance	Power	Terminal	Resistance	Level 1	Level 2	
Part Number	Value (Ohms)	Rating (W)	Characteristic (#)	Tolerance (%)	(FRL)(&)	(FRL)(&)	Manufacturer
RBR57%10R00#&	10.00	3/4	L, U	T, Q, A, B	R	P	ULT
RBR57%10R10#&	10.10	3/4	L, U	T, Q, A, B	R	P	ULT
RBR57%10R20#&	10.20	3/4	L, U	T, Q, A, B	R	P	ULT
RBR57%10R40#&	10.40	3/4	L, U	T, Q, A, B	R	P	ULT
RBR57%10R50#&	10.50	3/4	L, U	T, Q, A, B	R	P	ULT
RBR57%10R60#&	10.60	3/4	L, U	T, Q, A, B	R	P	ULT
RBR57%10R70#&	10.70	3/4	L, U	T, Q, A, B	R	P	ULT
RBR57%10R90#&	10.90	3/4	L, U	T, Q, A, B	R	P	ULT
RBR57%11R00#&	11.00	3/4	L, U	T, Q, A, B	R	P	ULT
RBR57%11R10#&	11.10	3/4	L, U	T, Q, A, B	R	P	ULT
RBR57%11R30#&	11.30	3/4	L, U	T, Q, A, B	R	P	ULT
RBR57%11R40#&	11.40	3/4	L, U	T, Q, A, B	R	P	ULT
RBR57%11R50#&	11.50	3/4	L, U	T, Q, A, B	R	P	ULT
RBR57%11R70#&	11.70	3/4	L, U	T, Q, A, B	R	P	ULT
RBR57%11R80#&	11.80	3/4	L, U	T, Q, A, B	R	P	ULT
RBR57%12R00#&	12.00	3/4	L, U	T, Q, A, B	R	P	ULT
RBR57%12R10#&	12.10	3/4	L, U	T, Q, A, B	R	P	ULT
RBR57%12R30#&	12.30	3/4	L, U	T, Q, A, B	R	P	ULT
RBR57%12R40#&	12.40	3/4	L, U	T, Q, A, B	R	P	ULT
RBR57%12R60#&	12.60	3/4	L, U	T, Q, A, B	R	P	ULT
RBR57%12R70#&	12.70	3/4	L, U	T, Q, A, B	R	P	ULT
RBR57%12R90#&	12.90	3/4	L, U	T, Q, A, B	R	P	ULT
RBR57%13R00#&	13.00	3/4	L, U	T, Q, A, B	R	P	ULT
RBR57%13R20#&	13.20	3/4	L, U	T, Q, A, B	R	P	ULT
RBR57%13R30#&	13.30	3/4	L, U	T, Q, A, B	R	P	ULT
RBR57%13R50#&	13.50	3/4	L, U	T, Q, A, B	R	P	ULT
RBR57%13R70#&	13.70	3/4	L, U	T, Q, A, B	R	P	ULT
RBR57%13R80#&	13.80	3/4	L, U	T, Q, A, B	R	P	ULT
RBR57%14R00#&	14.00	3/4	L, U	T, Q, A, B	R	P	ULT

RBR57%14R20#&	14.20	3/4	L, U	T, Q, A, B	R	P	ULT
RBR57%14R30#&	14.30	3/4	L, U	T, Q, A, B	R	P	ULT
RBR57%14R50#&	14.50	3/4	L, U	T, Q, A, B	R	P	ULT
RBR57%14R70#&	14.70	3/4	L, U	T, Q, A, B	R	P	ULT
RBR57%14R90#&	14.90	3/4	L, U	T, Q, A, B	R	P	ULT
RBR57%15R00#&	15.00	3/4	L, U	T, Q, A, B	R	P	ULT
RBR57%15R20#&	15.20	3/4	L, U	T, Q, A, B	R	P	ULT
RBR57%15R40#&	15.40	3/4	L, U	T, Q, A, B	R	P	ULT
RBR57%15R60#&	15.60	3/4	L, U	T, Q, A, B	R	P	ULT
RBR57%15R80#&	15.80	3/4	L, U	T, Q, A, B	R	P	ULT
RBR57%16R00#&	16.00	3/4	L, U	T, Q, A, B	R	P	ULT
RBR57%16R20#&	16.20	3/4	L, U	T, Q, A, B	R	P	ULT
RBR57%16R40#&	16.40	3/4	L, U	T, Q, A, B	R	P	ULT
RBR57%16R50#&	16.50	3/4	L, U	T, Q, A, B	R	P	ULT
RBR57%16R70#&	16.70	3/4	L, U	T, Q, A, B	R	P	ULT
RBR57%16R90#&	16.90	3/4	L, U	T, Q, A, B	R	P	ULT
RBR57%17R20#&	17.20	3/4	L, U	T, Q, A, B	R	P	ULT
RBR57%17R40#&	17.40	3/4	L, U	T, Q, A, B	R	P	ULT
RBR57%17R60#&	17.60	3/4	L, U	T, Q, A, B	R	P	ULT
RBR57%17R80#&	17.80	3/4	L, U	T, Q, A, B	R	P	ULT
RBR57%18R00#&	18.00	3/4	L, U	T, Q, A, B	R	P	ULT
RBR57%18R20#&	18.20	3/4	L, U	T, Q, A, B	R	P	ULT
RBR57%18R40#&	18.40	3/4	L, U	T, Q, A, B	R	P	ULT
RBR57%18R70#&	18.70	3/4	L, U	T, Q, A, B	R	P	ULT
RBR57%18R90#&	18.90	3/4	L, U	T, Q, A, B	R	P	ULT
RBR57%19R10#&	19.10	3/4	L, U	T, Q, A, B	R	P	ULT
RBR57%19R30#&	19.30	3/4	L, U	T, Q, A, B	R	P	ULT
RBR57%19R60#&	19.60	3/4	L, U	T, Q, A, B	R	P	ULT
RBR57%19R80#&	19.80	3/4	L, U	T, Q, A, B	R	P	ULT
RBR57%20R00#&	20.00	3/4	L, U	T, Q, A, B	R	P	ULT
RBR57%20R30#&	20.30	3/4	L, U	T, Q, A, B	R	P	ULT
RBR57%20R50#&	20.50	3/4	L, U	T, Q, A, B	R	P	ULT
RBR57%20R80#&	20.80	3/4	L, U	T, Q, A, B	R	P	ULT
RBR57%21R00#&	21.00	3/4	L, U	T, Q, A, B	R	P	ULT
RBR57%21R30#&	21.30	3/4	L, U	T, Q, A, B	R	P	ULT
RBR57%21R50#&	21.50	3/4	L, U	T, Q, A, B	R	P	ULT
RBR57%21R80#&	21.80	3/4	L, U	T, Q, A, B	R	P	ULT
RBR57%22R10#&	22.10	3/4	L, U	T, Q, A, B	R	P	ULT
RBR57%22R30#&	22.30	3/4	L, U	T, Q, A, B	R	P	ULT
RBR57%22R60#&	22.60	3/4	L, U	T, Q, A, B	R	P	ULT
RBR57%22R90#&	22.90	3/4	L, U	T, Q, A, B	R	P	ULT
RBR57%23R20#&	23.20	3/4	L, U	T, Q, A, B	R	P	ULT
RBR57%23R40#&	23.40	3/4	L, U	T, Q, A, B	R	P	ULT
RBR57%23R70#&	23.70	3/4	L, U	T, Q, A, B	R	P	ULT
RBR57%24R00#&	24.00	3/4	L, U	T, Q, A, B	R	P	ULT
RBR57%24R30#&	24.30	3/4	L, U	T, Q, A, B	R	P	ULT
RBR57%24R60#&	24.60	3/4	L, U	T, Q, A, B	R	P	ULT

RBR57%24R90#&	24.90	3/4	L, U	T, Q, A, B	R	P	ULT
RBR57%25R20#&	25.20	3/4	L, U	T, Q, A, B	R	P	ULT
RBR57%25R50#&	25.50	3/4	L, U	T, Q, A, B	R	P	ULT
RBR57%25R80#&	25.80	3/4	L, U	T, Q, A, B	R	P	ULT
RBR57%26R10#&	26.10	3/4	L, U	T, Q, A, B	R	P	ULT
RBR57%26R40#&	26.40	3/4	L, U	T, Q, A, B	R	P	ULT
RBR57%26R70#&	26.70	3/4	L, U	T, Q, A, B	R	P	ULT
RBR57%27R10#&	27.10	3/4	L, U	T, Q, A, B	R	P	ULT
RBR57%27R40#&	27.40	3/4	L, U	T, Q, A, B	R	P	ULT
RBR57%27R70#&	27.70	3/4	L, U	T, Q, A, B	R	P	ULT
RBR57%28R00#&	28.00	3/4	L, U	T, Q, A, B	R	P	ULT
RBR57%28R40#&	28.40	3/4	L, U	T, Q, A, B	R	P	ULT
RBR57%28R70#&	28.70	3/4	L, U	T, Q, A, B	R	P	ULT
RBR57%29R10#&	29.10	3/4	L, U	T, Q, A, B	R	P	ULT
RBR57%29R40#&	29.40	3/4	L, U	T, Q, A, B	R	P	ULT
RBR57%29R80#&	29.80	3/4	L, U	T, Q, A, B	R	P	ULT
RBR57%30R10#&	30.10	3/4	L, U	T, Q, A, B	R	P	ULT
RBR57%30R50#&	30.50	3/4	L, U	T, Q, A, B	R	P	ULT
RBR57%30R90#&	30.90	3/4	L, U	T, Q, A, B	R	P	ULT
RBR57%31R20#&	31.20	3/4	L, U	T, Q, A, B	R	P	ULT
RBR57%31R60#&	31.60	3/4	L, U	T, Q, A, B	R	P	ULT
RBR57%32R00#&	32.00	3/4	L, U	T, Q, A, B	R	P	ULT
RBR57%32R40#&	32.40	3/4	L, U	T, Q, A, B	R	P	ULT
RBR57%32R80#&	32.80	3/4	L, U	T, Q, A, B	R	P	ULT
RBR57%33R20#&	33.20	3/4	L, U	T, Q, A, B	R	P	ULT
RBR57%33R60#&	33.60	3/4	L, U	T, Q, A, B	R	P	ULT
RBR57%34R00#&	34.00	3/4	L, U	T, Q, A, B	R	P	ULT
RBR57%34R40#&	34.40	3/4	L, U	T, Q, A, B	R	P	ULT
RBR57%34R80#&	34.80	3/4	L, U	T, Q, A, B	R	P	ULT
RBR57%35R20#&	35.20	3/4	L, U	T, Q, A, B	R	P	ULT
RBR57%35R70#&	35.70	3/4	L, U	T, Q, A, B	R	P	ULT
RBR57%36R10#&	36.10	3/4	L, U	T, Q, A, B	R	P	ULT
RBR57%36R50#&	36.50	3/4	L, U	T, Q, A, B	R	P	ULT
RBR57%37R00#&	37.00	3/4	L, U	T, Q, A, B	R	P	ULT
RBR57%37R40#&	37.40	3/4	L, U	T, Q, A, B	R	P	ULT
RBR57%37R90#&	37.90	3/4	L, U	T, Q, A, B	R	P	ULT
RBR57%38R30#&	38.30	3/4	L, U	T, Q, A, B	R	P	ULT
RBR57%38R80#&	38.80	3/4	L, U	T, Q, A, B	R	P	ULT
RBR57%39R20#&	39.20	3/4	L, U	T, Q, A, B	R	P	ULT
RBR57%39R70#&	39.70	3/4	L, U	T, Q, A, B	R	P	ULT
RBR57%40R20#&	40.20	3/4	L, U	T, Q, A, B	R	P	ULT
RBR57%40R70#&	40.70	3/4	L, U	T, Q, A, B	R	P	ULT
RBR57%41R20#&	41.20	3/4	L, U	T, Q, A, B	R	P	ULT
RBR57%41R70#&	41.70	3/4	L, U	T, Q, A, B	R	P	ULT
RBR57%42R20#&	42.20	3/4	L, U	T, Q, A, B	R	P	ULT
RBR57%42R70#&	42.70	3/4	L, U	T, Q, A, B	R	P	ULT
RBR57%43R20#&	43.20	3/4	L, U	T, Q, A, B	R	P	ULT

RBR57%43R70#&	43.70	3/4	L, U	T, Q, A, B	R	P	ULT
RBR57%44R20#&	44.20	3/4	L, U	T, Q, A, B	R	P	ULT
RBR57%44R80#&	44.80	3/4	L, U	T, Q, A, B	R	P	ULT
RBR57%45R30#&	45.30	3/4	L, U	T, Q, A, B	R	P	ULT
RBR57%45R90#&	45.90	3/4	L, U	T, Q, A, B	R	P	ULT
RBR57%46R40#&	46.40	3/4	L, U	T, Q, A, B	R	P	ULT
RBR57%47R00#&	47.00	3/4	L, U	T, Q, A, B	R	P	ULT
RBR57%47R50#&	47.50	3/4	L, U	T, Q, A, B	R	P	ULT
RBR57%48R10#&	48.10	3/4	L, U	T, Q, A, B	R	P	ULT
RBR57%48R70#&	48.70	3/4	L, U	T, Q, A, B	R	P	ULT
RBR57%49R30#&	49.30	3/4	L, U	T, Q, A, B	R	P	ULT
RBR57%49R90#&	49.90	3/4	L, U	T, Q, A, B	R	P	ULT
RBR57%50R50#&	50.50	3/4	L, U	T, Q, A, B	R	P	ULT
RBR57%51R10#&	51.10	3/4	L, U	T, Q, A, B	R	P	ULT
RBR57%51R70#&	51.70	3/4	L, U	T, Q, A, B	R	P	ULT
RBR57%52R30#&	52.30	3/4	L, U	T, Q, A, B	R	P	ULT
RBR57%53R00#&	53.00	3/4	L, U	T, Q, A, B	R	P	ULT
RBR57%53R60#&	53.60	3/4	L, U	T, Q, A, B	R	P	ULT
RBR57%54R20#&	54.20	3/4	L, U	T, Q, A, B	R	P	ULT
RBR57%54R90#&	54.90	3/4	L, U	T, Q, A, B	R	P	ULT
RBR57%55R60#&	55.60	3/4	L, U	T, Q, A, B	R	P	ULT
RBR57%56R20#&	56.20	3/4	L, U	T, Q, A, B	R	P	ULT
RBR57%56R90#&	56.90	3/4	L, U	T, Q, A, B	R	P	ULT
RBR57%57R60#&	57.60	3/4	L, U	T, Q, A, B	R	P	ULT
RBR57%58R30#&	58.30	3/4	L, U	T, Q, A, B	R	P	ULT
RBR57%59R00#&	59.00	3/4	L, U	T, Q, A, B	R	P	ULT
RBR57%59R70#&	59.70	3/4	L, U	T, Q, A, B	R	P	ULT
RBR57%60R40#&	60.40	3/4	L, U	T, Q, A, B	R	P	ULT
RBR57%61R20#&	61.20	3/4	L, U	T, Q, A, B	R	P	ULT
RBR57%61R90#&	61.90	3/4	L, U	T, Q, A, B	R	P	ULT
RBR57%62R60#&	62.60	3/4	L, U	T, Q, A, B	R	P	ULT
RBR57%63R40#&	63.40	3/4	L, U	T, Q, A, B	R	P	ULT
RBR57%64R20#&	64.20	3/4	L, U	T, Q, A, B	R	P	ULT
RBR57%64R90#&	64.90	3/4	L, U	T, Q, A, B	R	P	ULT
RBR57%65R70#&	65.70	3/4	L, U	T, Q, A, B	R	P	ULT
RBR57%66R50#&	66.50	3/4	L, U	T, Q, A, B	R	P	ULT
RBR57%67R30#&	67.30	3/4	L, U	T, Q, A, B	R	P	ULT
RBR57%68R10#&	68.10	3/4	L, U	T, Q, A, B	R	P	ULT
RBR57%69R00#&	69.00	3/4	L, U	T, Q, A, B	R	P	ULT
RBR57%69R80#&	69.80	3/4	L, U	T, Q, A, B	R	P	ULT
RBR57%70R60#&	70.60	3/4	L, U	T, Q, A, B	R	P	ULT
RBR57%71R50#&	71.50	3/4	L, U	T, Q, A, B	R	P	ULT
RBR57%72R30#&	72.30	3/4	L, U	T, Q, A, B	R	P	ULT
RBR57%73R20#&	73.20	3/4	L, U	T, Q, A, B	R	P	ULT
RBR57%74R10#&	74.10	3/4	L, U	T, Q, A, B	R	P	ULT
RBR57%75R00#&	75.00	3/4	L, U	T, Q, A, B	R	P	ULT
RBR57%75R90#&	75.90	3/4	L, U	T, Q, A, B	R	P	ULT

RBR57%76R80#&	76.80	3/4	L, U	T, Q, A, B	R	P	ULT
RBR57%77R70#&	77.70	3/4	L, U	T, Q, A, B	R	P	ULT
RBR57%78R70#&	78.70	3/4	L, U	T, Q, A, B	R	P	ULT
RBR57%79R60#&	79.60	3/4	L, U	T, Q, A, B	R	P	ULT
RBR57%80R60#&	80.60	3/4	L, U	T, Q, A, B	R	P	ULT
RBR57%81R60#&	81.60	3/4	L, U	T, Q, A, B	R	P	ULT
RBR57%82R50#&	82.50	3/4	L, U	T, Q, A, B	R	P	ULT
RBR57%83R50#&	83.50	3/4	L, U	T, Q, A, B	R	P	ULT
RBR57%84R50#&	84.50	3/4	L, U	T, Q, A, B	R	P	ULT
RBR57%85R60#&	85.60	3/4	L, U	T, Q, A, B	R	P	ULT
RBR57%86R60#&	86.60	3/4	L, U	T, Q, A, B	R	P	ULT
RBR57%87R60#&	87.60	3/4	L, U	T, Q, A, B	R	P	ULT
RBR57%88R70#&	88.70	3/4	L, U	T, Q, A, B	R	P	ULT
RBR57%89R80#&	89.80	3/4	L, U	T, Q, A, B	R	P	ULT
RBR57%90R90#&	90.90	3/4	L, U	T, Q, A, B	R	P	ULT
RBR57%92R00#&	92.00	3/4	L, U	T, Q, A, B	R	P	ULT
RBR57%93R10#&	93.10	3/4	L, U	T, Q, A, B	R	P	ULT
RBR57%94R20#&	94.20	3/4	L, U	T, Q, A, B	R	P	ULT
RBR57%95R30#&	95.30	3/4	L, U	T, Q, A, B	R	P	ULT
RBR57%96R50#&	96.50	3/4	L, U	T, Q, A, B	R	P	ULT
RBR57%97R60#&	97.60	3/4	L, U	T, Q, A, B	R	P	ULT
RBR57%98R80#&	98.80	3/4	L, U	T, Q, A, B	R	P	ULT
RBR57%100R0#&	100.0	3/4	L, U	T, Q, A, B	R	P	ULT
RBR57%101R0#&	101.0	3/4	L, U	T, Q, A, B	R	P	ULT
RBR57%102R0#&	102.0	3/4	L, U	T, Q, A, B	R	P	ULT
RBR57%104R0#&	104.0	3/4	L, U	T, Q, A, B	R	P	ULT
RBR57%105R0#&	105.0	3/4	L, U	T, Q, A, B	R	P	ULT
RBR57%106R0#&	106.0	3/4	L, U	T, Q, A, B	R	P	ULT
RBR57%107R0#&	107.0	3/4	L, U	T, Q, A, B	R	P	ULT
RBR57%109R0#&	109.0	3/4	L, U	T, Q, A, B	R	P	ULT
RBR57%110R0#&	110.0	3/4	L, U	T, Q, A, B	R	P	ULT
RBR57%111R0#&	111.0	3/4	L, U	T, Q, A, B	R	P	ULT
RBR57%113R0#&	113.0	3/4	L, U	T, Q, A, B	R	P	ULT
RBR57%114R0#&	114.0	3/4	L, U	T, Q, A, B	R	P	ULT
RBR57%115R0#&	115.0	3/4	L, U	T, Q, A, B	R	P	ULT
RBR57%117R0#&	117.0	3/4	L, U	T, Q, A, B	R	P	ULT
RBR57%118R0#&	118.0	3/4	L, U	T, Q, A, B	R	P	ULT
RBR57%120R0#&	120.0	3/4	L, U	T, Q, A, B	R	P	ULT
RBR57%121R0#&	121.0	3/4	L, U	T, Q, A, B	R	P	ULT
RBR57%123R0#&	123.0	3/4	L, U	T, Q, A, B	R	P	ULT
RBR57%124R0#&	124.0	3/4	L, U	T, Q, A, B	R	P	ULT
RBR57%126R0#&	126.0	3/4	L, U	T, Q, A, B	R	P	ULT
RBR57%127R0#&	127.0	3/4	L, U	T, Q, A, B	R	P	ULT
RBR57%129R0#&	129.0	3/4	L, U	T, Q, A, B	R	P	ULT
RBR57%130R0#&	130.0	3/4	L, U	T, Q, A, B	R	P	ULT
RBR57%132R0#&	132.0	3/4	L, U	T, Q, A, B	R	P	ULT
RBR57%133R0#&	133.0	3/4	L, U	T, Q, A, B	R	P	ULT

RBR57%135R0#&	135.0	3/4	L, U	T, Q, A, B	R	P	ULT
RBR57%137R0#&	137.0	3/4	L, U	T, Q, A, B	R	P	ULT
RBR57%138R0#&	138.0	3/4	L, U	T, Q, A, B	R	P	ULT
RBR57%140R0#&	140.0	3/4	L, U	T, Q, A, B	R	P	ULT
RBR57%142R0#&	142.0	3/4	L, U	T, Q, A, B	R	P	ULT
RBR57%143R0#&	143.0	3/4	L, U	T, Q, A, B	R	P	ULT
RBR57%145R0#&	145.0	3/4	L, U	T, Q, A, B	R	P	ULT
RBR57%147R0#&	147.0	3/4	L, U	T, Q, A, B	R	P	ULT
RBR57%149R0#&	149.0	3/4	L, U	T, Q, A, B	R	P	ULT
RBR57%150R0#&	150.0	3/4	L, U	T, Q, A, B	R	P	ULT
RBR57%152R0#&	152.0	3/4	L, U	T, Q, A, B	R	P	ULT
RBR57%154R0#&	154.0	3/4	L, U	T, Q, A, B	R	P	ULT
RBR57%156R0#&	156.0	3/4	L, U	T, Q, A, B	R	P	ULT
RBR57%158R0#&	158.0	3/4	L, U	T, Q, A, B	R	P	ULT
RBR57%160R0#&	160.0	3/4	L, U	T, Q, A, B	R	P	ULT
RBR57%162R0#&	162.0	3/4	L, U	T, Q, A, B	R	P	ULT
RBR57%164R0#&	164.0	3/4	L, U	T, Q, A, B	R	P	ULT
RBR57%165R0#&	165.0	3/4	L, U	T, Q, A, B	R	P	ULT
RBR57%167R0#&	167.0	3/4	L, U	T, Q, A, B	R	P	ULT
RBR57%169R0#&	169.0	3/4	L, U	T, Q, A, B	R	P	ULT
RBR57%172R0#&	172.0	3/4	L, U	T, Q, A, B	R	P	ULT
RBR57%174R0#&	174.0	3/4	L, U	T, Q, A, B	R	P	ULT
RBR57%176R0#&	176.0	3/4	L, U	T, Q, A, B	R	P	ULT
RBR57%178R0#&	178.0	3/4	L, U	T, Q, A, B	R	P	ULT
RBR57%180R0#&	180.0	3/4	L, U	T, Q, A, B	R	P	ULT
RBR57%182R0#&	182.0	3/4	L, U	T, Q, A, B	R	P	ULT
RBR57%184R0#&	184.0	3/4	L, U	T, Q, A, B	R	P	ULT
RBR57%187R0#&	187.0	3/4	L, U	T, Q, A, B	R	P	ULT
RBR57%189R0#&	189.0	3/4	L, U	T, Q, A, B	R	P	ULT
RBR57%191R0#&	191.0	3/4	L, U	T, Q, A, B	R	P	ULT
RBR57%193R0#&	193.0	3/4	L, U	T, Q, A, B	R	P	ULT
RBR57%196R0#&	196.0	3/4	L, U	T, Q, A, B	R	P	ULT
RBR57%198R0#&	198.0	3/4	L, U	T, Q, A, B	R	P	ULT
RBR57%200R0#&	200.0	3/4	L, U	T, Q, A, B	R	P	ULT
RBR57%203R0#&	203.0	3/4	L, U	T, Q, A, B	R	P	ULT
RBR57%205R0#&	205.0	3/4	L, U	T, Q, A, B	R	P	ULT
RBR57%208R0#&	208.0	3/4	L, U	T, Q, A, B	R	P	ULT
RBR57%210R0#&	210.0	3/4	L, U	T, Q, A, B	R	P	ULT
RBR57%213R0#&	213.0	3/4	L, U	T, Q, A, B	R	P	ULT
RBR57%215R0#&	215.0	3/4	L, U	T, Q, A, B	R	P	ULT
RBR57%218R0#&	218.0	3/4	L, U	T, Q, A, B	R	P	ULT
RBR57%221R0#&	221.0	3/4	L, U	T, Q, A, B	R	P	ULT
RBR57%223R0#&	223.0	3/4	L, U	T, Q, A, B	R	P	ULT
RBR57%226R0#&	226.0	3/4	L, U	T, Q, A, B	R	P	ULT
RBR57%229R0#&	229.0	3/4	L, U	T, Q, A, B	R	P	ULT
RBR57%232R0#&	232.0	3/4	L, U	T, Q, A, B	R	P	ULT
RBR57%234R0#&	234.0	3/4	L, U	T, Q, A, B	R	P	ULT

RBR57%237R0#&	237.0	3/4	L, U	T, Q, A, B	R	P	ULT
RBR57%240R0#&	240.0	3/4	L, U	T, Q, A, B	R	P	ULT
RBR57%243R0#&	243.0	3/4	L, U	T, Q, A, B	R	P	ULT
RBR57%246R0#&	246.0	3/4	L, U	T, Q, A, B	R	P	ULT
RBR57%249R0#&	249.0	3/4	L, U	T, Q, A, B	R	P	ULT
RBR57%252R0#&	252.0	3/4	L, U	T, Q, A, B	R	P	ULT
RBR57%255R0#&	255.0	3/4	L, U	T, Q, A, B	R	P	ULT
RBR57%258R0#&	258.0	3/4	L, U	T, Q, A, B	R	P	ULT
RBR57%261R0#&	261.0	3/4	L, U	T, Q, A, B	R	P	ULT
RBR57%264R0#&	264.0	3/4	L, U	T, Q, A, B	R	P	ULT
RBR57%267R0#&	267.0	3/4	L, U	T, Q, A, B	R	P	ULT
RBR57%271R0#&	271.0	3/4	L, U	T, Q, A, B	R	P	ULT
RBR57%274R0#&	274.0	3/4	L, U	T, Q, A, B	R	P	ULT
RBR57%277R0#&	277.0	3/4	L, U	T, Q, A, B	R	P	ULT
RBR57%280R0#&	280.0	3/4	L, U	T, Q, A, B	R	P	ULT
RBR57%284R0#&	284.0	3/4	L, U	T, Q, A, B	R	P	ULT
RBR57%287R0#&	287.0	3/4	L, U	T, Q, A, B	R	P	ULT
RBR57%291R0#&	291.0	3/4	L, U	T, Q, A, B	R	P	ULT
RBR57%294R0#&	294.0	3/4	L, U	T, Q, A, B	R	P	ULT
RBR57%298R0#&	298.0	3/4	L, U	T, Q, A, B	R	P	ULT
RBR57%301R0#&	301.0	3/4	L, U	T, Q, A, B	R	P	ULT
RBR57%305R0#&	305.0	3/4	L, U	T, Q, A, B	R	P	ULT
RBR57%309R0#&	309.0	3/4	L, U	T, Q, A, B	R	P	ULT
RBR57%312R0#&	312.0	3/4	L, U	T, Q, A, B	R	P	ULT
RBR57%316R0#&	316.0	3/4	L, U	T, Q, A, B	R	P	ULT
RBR57%320R0#&	320.0	3/4	L, U	T, Q, A, B	R	P	ULT
RBR57%324R0#&	324.0	3/4	L, U	T, Q, A, B	R	P	ULT
RBR57%328R0#&	328.0	3/4	L, U	T, Q, A, B	R	P	ULT
RBR57%332R0#&	332.0	3/4	L, U	T, Q, A, B	R	P	ULT
RBR57%336R0#&	336.0	3/4	L, U	T, Q, A, B	R	P	ULT
RBR57%340R0#&	340.0	3/4	L, U	T, Q, A, B	R	P	ULT
RBR57%344R0#&	344.0	3/4	L, U	T, Q, A, B	R	P	ULT
RBR57%348R0#&	348.0	3/4	L, U	T, Q, A, B	R	P	ULT
RBR57%352R0#&	352.0	3/4	L, U	T, Q, A, B	R	P	ULT
RBR57%357R0#&	357.0	3/4	L, U	T, Q, A, B	R	P	ULT
RBR57%361R0#&	361.0	3/4	L, U	T, Q, A, B	R	P	ULT
RBR57%365R0#&	365.0	3/4	L, U	T, Q, A, B	R	P	ULT
RBR57%370R0#&	370.0	3/4	L, U	T, Q, A, B	R	P	ULT
RBR57%374R0#&	374.0	3/4	L, U	T, Q, A, B	R	P	ULT
RBR57%379R0#&	379.0	3/4	L, U	T, Q, A, B	R	P	ULT
RBR57%383R0#&	383.0	3/4	L, U	T, Q, A, B	R	P	ULT
RBR57%388R0#&	388.0	3/4	L, U	T, Q, A, B	R	P	ULT
RBR57%392R0#&	392.0	3/4	L, U	T, Q, A, B	R	P	ULT
RBR57%397R0#&	397.0	3/4	L, U	T, Q, A, B	R	P	ULT
RBR57%402R0#&	402.0	3/4	L, U	T, Q, A, B	R	P	ULT
RBR57%407R0#&	407.0	3/4	L, U	T, Q, A, B	R	P	ULT
RBR57%412R0#&	412.0	3/4	L, U	T, Q, A, B	R	P	ULT

RBR57%417R0#&	417.0	3/4	L, U	T, Q, A, B	R	P	ULT
RBR57%422R0#&	422.0	3/4	L, U	T, Q, A, B	R	P	ULT
RBR57%427R0#&	427.0	3/4	L, U	T, Q, A, B	R	P	ULT
RBR57%432R0#&	432.0	3/4	L, U	T, Q, A, B	R	P	ULT
RBR57%437R0#&	437.0	3/4	L, U	T, Q, A, B	R	P	ULT
RBR57%442R0#&	442.0	3/4	L, U	T, Q, A, B	R	P	ULT
RBR57%448R0#&	448.0	3/4	L, U	T, Q, A, B	R	P	ULT
RBR57%453R0#&	453.0	3/4	L, U	T, Q, A, B	R	P	ULT
RBR57%459R0#&	459.0	3/4	L, U	T, Q, A, B	R	P	ULT
RBR57%464R0#&	464.0	3/4	L, U	T, Q, A, B	R	P	ULT
RBR57%470R0#&	470.0	3/4	L, U	T, Q, A, B	R	P	ULT
RBR57%475R0#&	475.0	3/4	L, U	T, Q, A, B	R	P	ULT
RBR57%481R0#&	481.0	3/4	L, U	T, Q, A, B	R	P	ULT
RBR57%487R0#&	487.0	3/4	L, U	T, Q, A, B	R	P	ULT
RBR57%493R0#&	493.0	3/4	L, U	T, Q, A, B	R	P	ULT
RBR57%499R0#&	499.0	3/4	L, U	T, Q, A, B	R	P	ULT
RBR57%505R0#&	505.0	3/4	L, U	T, Q, A, B	R	P	ULT
RBR57%511R0#&	511.0	3/4	L, U	T, Q, A, B	R	P	ULT
RBR57%517R0#&	517.0	3/4	L, U	T, Q, A, B	R	P	ULT
RBR57%523R0#&	523.0	3/4	L, U	T, Q, A, B	R	P	ULT
RBR57%530R0#&	530.0	3/4	L, U	T, Q, A, B	R	P	ULT
RBR57%536R0#&	536.0	3/4	L, U	T, Q, A, B	R	P	ULT
RBR57%542R0#&	542.0	3/4	L, U	T, Q, A, B	R	P	ULT
RBR57%549R0#&	549.0	3/4	L, U	T, Q, A, B	R	P	ULT
RBR57%556R0#&	556.0	3/4	L, U	T, Q, A, B	R	P	ULT
RBR57%562R0#&	562.0	3/4	L, U	T, Q, A, B	R	P	ULT
RBR57%569R0#&	569.0	3/4	L, U	T, Q, A, B	R	P	ULT
RBR57%576R0#&	576.0	3/4	L, U	T, Q, A, B	R	P	ULT
RBR57%583R0#&	583.0	3/4	L, U	T, Q, A, B	R	P	ULT
RBR57%590R0#&	590.0	3/4	L, U	T, Q, A, B	R	P	ULT
RBR57%597R0#&	597.0	3/4	L, U	T, Q, A, B	R	P	ULT
RBR57%604R0#&	604.0	3/4	L, U	T, Q, A, B	R	P	ULT
RBR57%612R0#&	612.0	3/4	L, U	T, Q, A, B	R	P	ULT
RBR57%619R0#&	619.0	3/4	L, U	T, Q, A, B	R	P	ULT
RBR57%626R0#&	626.0	3/4	L, U	T, Q, A, B	R	P	ULT
RBR57%634R0#&	634.0	3/4	L, U	T, Q, A, B	R	P	ULT
RBR57%642R0#&	642.0	3/4	L, U	T, Q, A, B	R	P	ULT
RBR57%649R0#&	649.0	3/4	L, U	T, Q, A, B	R	P	ULT
RBR57%657R0#&	657.0	3/4	L, U	T, Q, A, B	R	P	ULT
RBR57%665R0#&	665.0	3/4	L, U	T, Q, A, B	R	P	ULT
RBR57%673R0#&	673.0	3/4	L, U	T, Q, A, B	R	P	ULT
RBR57%681R0#&	681.0	3/4	L, U	T, Q, A, B	R	P	ULT
RBR57%690R0#&	690.0	3/4	L, U	T, Q, A, B	R	P	ULT
RBR57%698R0#&	698.0	3/4	L, U	T, Q, A, B	R	P	ULT
RBR57%706R0#&	706.0	3/4	L, U	T, Q, A, B	R	P	ULT
RBR57%715R0#&	715.0	3/4	L, U	T, Q, A, B	R	P	ULT
RBR57%723R0#&	723.0	3/4	L, U	T, Q, A, B	R	P	ULT

RBR57%732R0#&	732.0	3/4	L, U	T, Q, A, B	R	P	ULT
RBR57%741R0#&	741.0	3/4	L, U	T, Q, A, B	R	P	ULT
RBR57%750R0#&	750.0	3/4	L, U	T, Q, A, B	R	P	ULT
RBR57%759R0#&	759.0	3/4	L, U	T, Q, A, B	R	P	ULT
RBR57%768R0#&	768.0	3/4	L, U	T, Q, A, B	R	P	ULT
RBR57%777R0#&	777.0	3/4	L, U	T, Q, A, B	R	P	ULT
RBR57%787R0#&	787.0	3/4	L, U	T, Q, A, B	R	P	ULT
RBR57%796R0#&	796.0	3/4	L, U	T, Q, A, B	R	P	ULT
RBR57%806R0#&	806.0	3/4	L, U	T, Q, A, B	R	P	ULT
RBR57%816R0#&	816.0	3/4	L, U	T, Q, A, B	R	P	ULT
RBR57%825R0#&	825.0	3/4	L, U	T, Q, A, B	R	P	ULT
RBR57%835R0#&	835.0	3/4	L, U	T, Q, A, B	R	P	ULT
RBR57%845R0#&	845.0	3/4	L, U	T, Q, A, B	R	P	ULT
RBR57%856R0#&	856.0	3/4	L, U	T, Q, A, B	R	P	ULT
RBR57%866R0#&	866.0	3/4	L, U	T, Q, A, B	R	P	ULT
RBR57%876R0#&	876.0	3/4	L, U	T, Q, A, B	R	P	ULT
RBR57%887R0#&	887.0	3/4	L, U	T, Q, A, B	R	P	ULT
RBR57%898R0#&	898.0	3/4	L, U	T, Q, A, B	R	P	ULT
RBR57%909R0#&	909.0	3/4	L, U	T, Q, A, B	R	P	ULT
RBR57%920R0#&	920.0	3/4	L, U	T, Q, A, B	R	P	ULT
RBR57%931R0#&	931.0	3/4	L, U	T, Q, A, B	R	P	ULT
RBR57%942R0#&	942.0	3/4	L, U	T, Q, A, B	R	P	ULT
RBR57%953R0#&	953.0	3/4	L, U	T, Q, A, B	R	P	ULT
RBR57%965R0#&	965.0	3/4	L, U	T, Q, A, B	R	P	ULT
RBR57%976R0#&	976.0	3/4	L, U	T, Q, A, B	R	P	ULT
RBR57%988R0#&	988.0	3/4	L, U	T, Q, A, B	R	P	ULT
RBR57%10000#&	1,000	3/4	L, U	T, Q, A, B	R	P	ULT
RBR57%10100#&	1,010	3/4	L, U	T, Q, A, B	R	P	ULT
RBR57%10200#&	1,020	3/4	L, U	T, Q, A, B	R	P	ULT
RBR57%10400#&	1,040	3/4	L, U	T, Q, A, B	R	P	ULT
RBR57%10500#&	1,050	3/4	L, U	T, Q, A, B	R	P	ULT
RBR57%10600#&	1,060	3/4	L, U	T, Q, A, B	R	P	ULT
RBR57%10700#&	1,070	3/4	L, U	T, Q, A, B	R	P	ULT
RBR57%10900#&	1,090	3/4	L, U	T, Q, A, B	R	P	ULT
RBR57%11000#&	1,100	3/4	L, U	T, Q, A, B	R	P	ULT
RBR57%11100#&	1,110	3/4	L, U	T, Q, A, B	R	P	ULT
RBR57%11300#&	1,130	3/4	L, U	T, Q, A, B	R	P	ULT
RBR57%11400#&	1,140	3/4	L, U	T, Q, A, B	R	P	ULT
RBR57%11500#&	1,150	3/4	L, U	T, Q, A, B	R	P	ULT
RBR57%11700#&	1,170	3/4	L, U	T, Q, A, B	R	P	ULT
RBR57%11800#&	1,180	3/4	L, U	T, Q, A, B	R	P	ULT
RBR57%12000#&	1,200	3/4	L, U	T, Q, A, B	R	P	ULT
RBR57%12100#&	1,210	3/4	L, U	T, Q, A, B	R	P	ULT
RBR57%12300#&	1,230	3/4	L, U	T, Q, A, B	R	P	ULT
RBR57%12400#&	1,240	3/4	L, U	T, Q, A, B	R	P	ULT
RBR57%12600#&	1,260	3/4	L, U	T, Q, A, B	R	P	ULT
RBR57%12700#&	1,270	3/4	L, U	T, Q, A, B	R	P	ULT

RBR57%12900#&	1,290	3/4	L, U	T, Q, A, B	R	P	ULT
RBR57%13000#&	1,300	3/4	L, U	T, Q, A, B	R	P	ULT
RBR57%13200#&	1,320	3/4	L, U	T, Q, A, B	R	P	ULT
RBR57%13300#&	1,330	3/4	L, U	T, Q, A, B	R	P	ULT
RBR57%13500#&	1,350	3/4	L, U	T, Q, A, B	R	P	ULT
RBR57%13700#&	1,370	3/4	L, U	T, Q, A, B	R	P	ULT
RBR57%13800#&	1,380	3/4	L, U	T, Q, A, B	R	P	ULT
RBR57%14000#&	1,400	3/4	L, U	T, Q, A, B	R	P	ULT
RBR57%14200#&	1,420	3/4	L, U	T, Q, A, B	R	P	ULT
RBR57%14300#&	1,430	3/4	L, U	T, Q, A, B	R	P	ULT
RBR57%14500#&	1,450	3/4	L, U	T, Q, A, B	R	P	ULT
RBR57%14700#&	1,470	3/4	L, U	T, Q, A, B	R	P	ULT
RBR57%14900#&	1,490	3/4	L, U	T, Q, A, B	R	P	ULT
RBR57%15000#&	1,500	3/4	L, U	T, Q, A, B	R	P	ULT
RBR57%15200#&	1,520	3/4	L, U	T, Q, A, B	R	P	ULT
RBR57%15400#&	1,540	3/4	L, U	T, Q, A, B	R	P	ULT
RBR57%15600#&	1,560	3/4	L, U	T, Q, A, B	R	P	ULT
RBR57%15800#&	1,580	3/4	L, U	T, Q, A, B	R	P	ULT
RBR57%16000#&	1,600	3/4	L, U	T, Q, A, B	R	P	ULT
RBR57%16200#&	1,620	3/4	L, U	T, Q, A, B	R	P	ULT
RBR57%16400#&	1,640	3/4	L, U	T, Q, A, B	R	P	ULT
RBR57%16500#&	1,650	3/4	L, U	T, Q, A, B	R	P	ULT
RBR57%16700#&	1,670	3/4	L, U	T, Q, A, B	R	P	ULT
RBR57%16900#&	1,690	3/4	L, U	T, Q, A, B	R	P	ULT
RBR57%17200#&	1,720	3/4	L, U	T, Q, A, B	R	P	ULT
RBR57%17400#&	1,740	3/4	L, U	T, Q, A, B	R	P	ULT
RBR57%17600#&	1,760	3/4	L, U	T, Q, A, B	R	P	ULT
RBR57%17800#&	1,780	3/4	L, U	T, Q, A, B	R	P	ULT
RBR57%18000#&	1,800	3/4	L, U	T, Q, A, B	R	P	ULT
RBR57%18200#&	1,820	3/4	L, U	T, Q, A, B	R	P	ULT
RBR57%18400#&	1,840	3/4	L, U	T, Q, A, B	R	P	ULT
RBR57%18700#&	1,870	3/4	L, U	T, Q, A, B	R	P	ULT
RBR57%18900#&	1,890	3/4	L, U	T, Q, A, B	R	P	ULT
RBR57%19100#&	1,910	3/4	L, U	T, Q, A, B	R	P	ULT
RBR57%19300#&	1,930	3/4	L, U	T, Q, A, B	R	P	ULT
RBR57%19600#&	1,960	3/4	L, U	T, Q, A, B	R	P	ULT
RBR57%19800#&	1,980	3/4	L, U	T, Q, A, B	R	P	ULT
RBR57%20000#&	2,000	3/4	L, U	T, Q, A, B	R	P	ULT
RBR57%20300#&	2,030	3/4	L, U	T, Q, A, B	R	P	ULT
RBR57%20500#&	2,050	3/4	L, U	T, Q, A, B	R	P	ULT
RBR57%20800#&	2,080	3/4	L, U	T, Q, A, B	R	P	ULT
RBR57%21000#&	2,100	3/4	L, U	T, Q, A, B	R	P	ULT
RBR57%21300#&	2,130	3/4	L, U	T, Q, A, B	R	P	ULT
RBR57%21500#&	2,150	3/4	L, U	T, Q, A, B	R	P	ULT
RBR57%21800#&	2,180	3/4	L, U	T, Q, A, B	R	P	ULT
RBR57%22100#&	2,210	3/4	L, U	T, Q, A, B	R	P	ULT
RBR57%22300#&	2,230	3/4	L, U	T, Q, A, B	R	P	ULT

RBR57%22600#&	2,260	3/4	L, U	T, Q, A, B	R	P	ULT
RBR57%22900#&	2,290	3/4	L, U	T, Q, A, B	R	P	ULT
RBR57%23200#&	2,320	3/4	L, U	T, Q, A, B	R	P	ULT
RBR57%23400#&	2,340	3/4	L, U	T, Q, A, B	R	P	ULT
RBR57%23700#&	2,370	3/4	L, U	T, Q, A, B	R	P	ULT
RBR57%24000#&	2,400	3/4	L, U	T, Q, A, B	R	P	ULT
RBR57%24300#&	2,430	3/4	L, U	T, Q, A, B	R	P	ULT
RBR57%24600#&	2,460	3/4	L, U	T, Q, A, B	R	P	ULT
RBR57%24900#&	2,490	3/4	L, U	T, Q, A, B	R	P	ULT
RBR57%25200#&	2,520	3/4	L, U	T, Q, A, B	R	P	ULT
RBR57%25500#&	2,550	3/4	L, U	T, Q, A, B	R	P	ULT
RBR57%25800#&	2,580	3/4	L, U	T, Q, A, B	R	P	ULT
RBR57%26100#&	2,610	3/4	L, U	T, Q, A, B	R	P	ULT
RBR57%26400#&	2,640	3/4	L, U	T, Q, A, B	R	P	ULT
RBR57%26700#&	2,670	3/4	L, U	T, Q, A, B	R	P	ULT
RBR57%27100#&	2,710	3/4	L, U	T, Q, A, B	R	P	ULT
RBR57%27400#&	2,740	3/4	L, U	T, Q, A, B	R	P	ULT
RBR57%27700#&	2,770	3/4	L, U	T, Q, A, B	R	P	ULT
RBR57%28000#&	2,800	3/4	L, U	T, Q, A, B	R	P	ULT
RBR57%28400#&	2,840	3/4	L, U	T, Q, A, B	R	P	ULT
RBR57%28700#&	2,870	3/4	L, U	T, Q, A, B	R	P	ULT
RBR57%29100#&	2,910	3/4	L, U	T, Q, A, B	R	P	ULT
RBR57%29400#&	2,940	3/4	L, U	T, Q, A, B	R	P	ULT
RBR57%29800#&	2,980	3/4	L, U	T, Q, A, B	R	P	ULT
RBR57%30100#&	3,010	3/4	L, U	T, Q, A, B	R	P	ULT
RBR57%30500#&	3,050	3/4	L, U	T, Q, A, B	R	P	ULT
RBR57%30900#&	3,090	3/4	L, U	T, Q, A, B	R	P	ULT
RBR57%31200#&	3,120	3/4	L, U	T, Q, A, B	R	P	ULT
RBR57%31600#&	3,160	3/4	L, U	T, Q, A, B	R	P	ULT
RBR57%32000#&	3,200	3/4	L, U	T, Q, A, B	R	P	ULT
RBR57%32400#&	3,240	3/4	L, U	T, Q, A, B	R	P	ULT
RBR57%32800#&	3,280	3/4	L, U	T, Q, A, B	R	P	ULT
RBR57%33200#&	3,320	3/4	L, U	T, Q, A, B	R	P	ULT
RBR57%33600#&	3,360	3/4	L, U	T, Q, A, B	R	P	ULT
RBR57%34000#&	3,400	3/4	L, U	T, Q, A, B	R	P	ULT
RBR57%34400#&	3,440	3/4	L, U	T, Q, A, B	R	P	ULT
RBR57%34800#&	3,480	3/4	L, U	T, Q, A, B	R	P	ULT
RBR57%35200#&	3,520	3/4	L, U	T, Q, A, B	R	P	ULT
RBR57%35700#&	3,570	3/4	L, U	T, Q, A, B	R	P	ULT
RBR57%36100#&	3,610	3/4	L, U	T, Q, A, B	R	P	ULT
RBR57%36500#&	3,650	3/4	L, U	T, Q, A, B	R	P	ULT
RBR57%37000#&	3,700	3/4	L, U	T, Q, A, B	R	P	ULT
RBR57%37400#&	3,740	3/4	L, U	T, Q, A, B	R	P	ULT
RBR57%37900#&	3,790	3/4	L, U	T, Q, A, B	R	P	ULT
RBR57%38300#&	3,830	3/4	L, U	T, Q, A, B	R	P	ULT
RBR57%38800#&	3,880	3/4	L, U	T, Q, A, B	R	P	ULT
RBR57%39200#&	3,920	3/4	L, U	T, Q, A, B	R	P	ULT

RBR57%39700#&	3,970	3/4	L, U	T, Q, A, B	R	P	ULT
RBR57%40200#&	4,020	3/4	L, U	T, Q, A, B	R	P	ULT
RBR57%40700#&	4,070	3/4	L, U	T, Q, A, B	R	P	ULT
RBR57%41200#&	4,120	3/4	L, U	T, Q, A, B	R	P	ULT
RBR57%41700#&	4,170	3/4	L, U	T, Q, A, B	R	P	ULT
RBR57%42200#&	4,220	3/4	L, U	T, Q, A, B	R	P	ULT
RBR57%42700#&	4,270	3/4	L, U	T, Q, A, B	R	P	ULT
RBR57%43200#&	4,320	3/4	L, U	T, Q, A, B	R	P	ULT
RBR57%43700#&	4,370	3/4	L, U	T, Q, A, B	R	P	ULT
RBR57%44200#&	4,420	3/4	L, U	T, Q, A, B	R	P	ULT
RBR57%44800#&	4,480	3/4	L, U	T, Q, A, B	R	P	ULT
RBR57%45300#&	4,530	3/4	L, U	T, Q, A, B	R	P	ULT
RBR57%45900#&	4,590	3/4	L, U	T, Q, A, B	R	P	ULT
RBR57%46400#&	4,640	3/4	L, U	T, Q, A, B	R	P	ULT
RBR57%47000#&	4,700	3/4	L, U	T, Q, A, B	R	P	ULT
RBR57%47500#&	4,750	3/4	L, U	T, Q, A, B	R	P	ULT
RBR57%48100#&	4,810	3/4	L, U	T, Q, A, B	R	P	ULT
RBR57%48700#&	4,870	3/4	L, U	T, Q, A, B	R	P	ULT
RBR57%49300#&	4,930	3/4	L, U	T, Q, A, B	R	P	ULT
RBR57%49900#&	4,990	3/4	L, U	T, Q, A, B	R	P	ULT
RBR57%50500#&	5,050	3/4	L, U	T, Q, A, B	R	P	ULT
RBR57%51100#&	5,110	3/4	L, U	T, Q, A, B	R	P	ULT
RBR57%51700#&	5,170	3/4	L, U	T, Q, A, B	R	P	ULT
RBR57%52300#&	5,230	3/4	L, U	T, Q, A, B	R	P	ULT
RBR57%53000#&	5,300	3/4	L, U	T, Q, A, B	R	P	ULT
RBR57%53600#&	5,360	3/4	L, U	T, Q, A, B	R	P	ULT
RBR57%54200#&	5,420	3/4	L, U	T, Q, A, B	R	P	ULT
RBR57%54900#&	5,490	3/4	L, U	T, Q, A, B	R	P	ULT
RBR57%55600#&	5,560	3/4	L, U	T, Q, A, B	R	P	ULT
RBR57%56200#&	5,620	3/4	L, U	T, Q, A, B	R	P	ULT
RBR57%56900#&	5,690	3/4	L, U	T, Q, A, B	R	P	ULT
RBR57%57600#&	5,760	3/4	L, U	T, Q, A, B	R	P	ULT
RBR57%58300#&	5,830	3/4	L, U	T, Q, A, B	R	P	ULT
RBR57%59000#&	5,900	3/4	L, U	T, Q, A, B	R	P	ULT
RBR57%59700#&	5,970	3/4	L, U	T, Q, A, B	R	P	ULT
RBR57%60400#&	6,040	3/4	L, U	T, Q, A, B	R	P	ULT
RBR57%61200#&	6,120	3/4	L, U	T, Q, A, B	R	P	ULT
RBR57%61900#&	6,190	3/4	L, U	T, Q, A, B	R	P	ULT
RBR57%62600#&	6,260	3/4	L, U	T, Q, A, B	R	P	ULT
RBR57%63400#&	6,340	3/4	L, U	T, Q, A, B	R	P	ULT
RBR57%64200#&	6,420	3/4	L, U	T, Q, A, B	R	P	ULT
RBR57%64900#&	6,490	3/4	L, U	T, Q, A, B	R	P	ULT
RBR57%65700#&	6,570	3/4	L, U	T, Q, A, B	R	P	ULT
RBR57%66500#&	6,650	3/4	L, U	T, Q, A, B	R	P	ULT
RBR57%67300#&	6,730	3/4	L, U	T, Q, A, B	R	P	ULT
RBR57%68100#&	6,810	3/4	L, U	T, Q, A, B	R	P	ULT
RBR57%69000#&	6,900	3/4	L, U	T, Q, A, B	R	P	ULT

RBR57%69800#&	6,980	3/4	L, U	T, Q, A, B	R	P	ULT
RBR57%70600#&	7,060	3/4	L, U	T, Q, A, B	R	P	ULT
RBR57%71500#&	7,150	3/4	L, U	T, Q, A, B	R	P	ULT
RBR57%72300#&	7,230	3/4	L, U	T, Q, A, B	R	P	ULT
RBR57%73200#&	7,320	3/4	L, U	T, Q, A, B	R	P	ULT
RBR57%74100#&	7,410	3/4	L, U	T, Q, A, B	R	P	ULT
RBR57%75000#&	7,500	3/4	L, U	T, Q, A, B	R	P	ULT
RBR57%75900#&	7,590	3/4	L, U	T, Q, A, B	R	P	ULT
RBR57%76800#&	7,680	3/4	L, U	T, Q, A, B	R	P	ULT
RBR57%77700#&	7,770	3/4	L, U	T, Q, A, B	R	P	ULT
RBR57%78700#&	7,870	3/4	L, U	T, Q, A, B	R	P	ULT
RBR57%79600#&	7,960	3/4	L, U	T, Q, A, B	R	P	ULT
RBR57%80600#&	8,060	3/4	L, U	T, Q, A, B	R	P	ULT
RBR57%81600#&	8,160	3/4	L, U	T, Q, A, B	R	P	ULT
RBR57%82500#&	8,250	3/4	L, U	T, Q, A, B	R	P	ULT
RBR57%83500#&	8,350	3/4	L, U	T, Q, A, B	R	P	ULT
RBR57%84500#&	8,450	3/4	L, U	T, Q, A, B	R	P	ULT
RBR57%85600#&	8,560	3/4	L, U	T, Q, A, B	R	P	ULT
RBR57%86600#&	8,660	3/4	L, U	T, Q, A, B	R	P	ULT
RBR57%87600#&	8,760	3/4	L, U	T, Q, A, B	R	P	ULT
RBR57%88700#&	8,870	3/4	L, U	T, Q, A, B	R	P	ULT
RBR57%89800#&	8,980	3/4	L, U	T, Q, A, B	R	P	ULT
RBR57%90900#&	9,090	3/4	L, U	T, Q, A, B	R	P	ULT
RBR57%92000#&	9,190	3/4	L, U	T, Q, A, B	R	P	ULT
RBR57%93100#&	9,310	3/4	L, U	T, Q, A, B	R	P	ULT
RBR57%94200#&	9,420	3/4	L, U	T, Q, A, B	R	P	ULT
RBR57%95300#&	9,530	3/4	L, U	T, Q, A, B	R	P	ULT
RBR57%96500#&	9,650	3/4	L, U	T, Q, A, B	R	P	ULT
RBR57%97600#&	9,760	3/4	L, U	T, Q, A, B	R	P	ULT
RBR57%98800#&	9,880	3/4	L, U	T, Q, A, B	R	P	ULT
RBR57%10001#&	10,000	3/4	L, U	T, Q, A, B	R	P	ULT
RBR57%10101#&	10,100	3/4	L, U	T, Q, A, B	R	P	ULT
RBR57%10201#&	10,200	3/4	L, U	T, Q, A, B	R	P	ULT
RBR57%10401#&	10,400	3/4	L, U	T, Q, A, B	R	P	ULT
RBR57%10501#&	10,500	3/4	L, U	T, Q, A, B	R	P	ULT
RBR57%10601#&	10,600	3/4	L, U	T, Q, A, B	R	P	ULT
RBR57%10701#&	10,700	3/4	L, U	T, Q, A, B	R	P	ULT
RBR57%10901#&	10,900	3/4	L, U	T, Q, A, B	R	P	ULT
RBR57%11001#&	11,000	3/4	L, U	T, Q, A, B	R	P	ULT
RBR57%11101#&	11,100	3/4	L, U	T, Q, A, B	R	P	ULT
RBR57%11301#&	11,300	3/4	L, U	T, Q, A, B	R	P	ULT
RBR57%11401#&	11,400	3/4	L, U	T, Q, A, B	R	P	ULT
RBR57%11501#&	11,500	3/4	L, U	T, Q, A, B	R	P	ULT
RBR57%11701#&	11,700	3/4	L, U	T, Q, A, B	R	P	ULT
RBR57%11801#&	11,800	3/4	L, U	T, Q, A, B	R	P	ULT
RBR57%12001#&	12,000	3/4	L, U	T, Q, A, B	R	P	ULT
RBR57%12101#&	12,100	3/4	L, U	T, Q, A, B	R	P	ULT

RBR57%12301#&	12,300	3/4	L, U	T, Q, A, B	R	P	ULT
RBR57%12401#&	12,400	3/4	L, U	T, Q, A, B	R	P	ULT
RBR57%12601#&	12,600	3/4	L, U	T, Q, A, B	R	P	ULT
RBR57%12701#&	12,700	3/4	L, U	T, Q, A, B	R	P	ULT
RBR57%12901#&	12,900	3/4	L, U	T, Q, A, B	R	P	ULT
RBR57%13001#&	13,000	3/4	L, U	T, Q, A, B	R	P	ULT
RBR57%13201#&	13,200	3/4	L, U	T, Q, A, B	R	P	ULT
RBR57%13301#&	13,300	3/4	L, U	T, Q, A, B	R	P	ULT
RBR57%13501#&	13,500	3/4	L, U	T, Q, A, B	R	P	ULT
RBR57%13701#&	13,700	3/4	L, U	T, Q, A, B	R	P	ULT
RBR57%13801#&	13,800	3/4	L, U	T, Q, A, B	R	P	ULT
RBR57%14001#&	14,000	3/4	L, U	T, Q, A, B	R	P	ULT
RBR57%14201#&	14,200	3/4	L, U	T, Q, A, B	R	P	ULT
RBR57%14301#&	14,300	3/4	L, U	T, Q, A, B	R	P	ULT
RBR57%14501#&	14,500	3/4	L, U	T, Q, A, B	R	P	ULT
RBR57%14701#&	14,700	3/4	L, U	T, Q, A, B	R	P	ULT
RBR57%14901#&	14,900	3/4	L, U	T, Q, A, B	R	P	ULT
RBR57%15001#&	15,000	3/4	L, U	T, Q, A, B	R	P	ULT
RBR57%15201#&	15,200	3/4	L, U	T, Q, A, B	R	P	ULT
RBR57%15401#&	15,400	3/4	L, U	T, Q, A, B	R	P	ULT
RBR57%15601#&	15,600	3/4	L, U	T, Q, A, B	R	P	ULT
RBR57%15801#&	15,800	3/4	L, U	T, Q, A, B	R	P	ULT
RBR57%16001#&	16,000	3/4	L, U	T, Q, A, B	R	P	ULT
RBR57%16201#&	16,200	3/4	L, U	T, Q, A, B	R	P	ULT
RBR57%16401#&	16,400	3/4	L, U	T, Q, A, B	R	P	ULT
RBR57%16501#&	16,500	3/4	L, U	T, Q, A, B	R	P	ULT
RBR57%16701#&	16,700	3/4	L, U	T, Q, A, B	R	P	ULT
RBR57%16901#&	16,900	3/4	L, U	T, Q, A, B	R	P	ULT
RBR57%17201#&	17,200	3/4	L, U	T, Q, A, B	R	P	ULT
RBR57%17401#&	17,400	3/4	L, U	T, Q, A, B	R	P	ULT
RBR57%17601#&	17,600	3/4	L, U	T, Q, A, B	R	P	ULT
RBR57%17801#&	17,800	3/4	L, U	T, Q, A, B	R	P	ULT
RBR57%18001#&	18,000	3/4	L, U	T, Q, A, B	R	P	ULT
RBR57%18201#&	18,200	3/4	L, U	T, Q, A, B	R	P	ULT
RBR57%18401#&	18,400	3/4	L, U	T, Q, A, B	R	P	ULT
RBR57%18701#&	18,700	3/4	L, U	T, Q, A, B	R	P	ULT
RBR57%18901#&	18,900	3/4	L, U	T, Q, A, B	R	P	ULT
RBR57%19101#&	19,100	3/4	L, U	T, Q, A, B	R	P	ULT
RBR57%19301#&	19,300	3/4	L, U	T, Q, A, B	R	P	ULT
RBR57%19601#&	19,600	3/4	L, U	T, Q, A, B	R	P	ULT
RBR57%19801#&	19,800	3/4	L, U	T, Q, A, B	R	P	ULT
RBR57%20001#&	20,000	3/4	L, U	T, Q, A, B	R	P	ULT
RBR57%20301#&	20,300	3/4	L, U	T, Q, A, B	R	P	ULT
RBR57%20501#&	20,500	3/4	L, U	T, Q, A, B	R	P	ULT
RBR57%20801#&	20,800	3/4	L, U	T, Q, A, B	R	P	ULT
RBR57%21001#&	21,000	3/4	L, U	T, Q, A, B	R	P	ULT
RBR57%21301#&	21,300	3/4	L, U	T, Q, A, B	R	P	ULT

RBR57%21501#&	21,500	3/4	L, U	T, Q, A, B	R	P	ULT
RBR57%21801#&	21,800	3/4	L, U	T, Q, A, B	R	P	ULT
RBR57%22101#&	22,100	3/4	L, U	T, Q, A, B	R	P	ULT
RBR57%22301#&	22,300	3/4	L, U	T, Q, A, B	R	P	ULT
RBR57%22601#&	22,600	3/4	L, U	T, Q, A, B	R	P	ULT
RBR57%22901#&	22,900	3/4	L, U	T, Q, A, B	R	P	ULT
RBR57%23201#&	23,200	3/4	L, U	T, Q, A, B	R	P	ULT
RBR57%23401#&	23,400	3/4	L, U	T, Q, A, B	R	P	ULT
RBR57%23701#&	23,700	3/4	L, U	T, Q, A, B	R	P	ULT
RBR57%24001#&	24,000	3/4	L, U	T, Q, A, B	R	P	ULT
RBR57%24301#&	24,300	3/4	L, U	T, Q, A, B	R	P	ULT
RBR57%24601#&	24,600	3/4	L, U	T, Q, A, B	R	P	ULT
RBR57%24901#&	24,900	3/4	L, U	T, Q, A, B	R	P	ULT
RBR57%25201#&	25,200	3/4	L, U	T, Q, A, B	R	P	ULT
RBR57%25501#&	25,500	3/4	L, U	T, Q, A, B	R	P	ULT
RBR57%25801#&	25,800	3/4	L, U	T, Q, A, B	R	P	ULT
RBR57%26101#&	26,100	3/4	L, U	T, Q, A, B	R	P	ULT
RBR57%26401#&	26,400	3/4	L, U	T, Q, A, B	R	P	ULT
RBR57%26701#&	26,700	3/4	L, U	T, Q, A, B	R	P	ULT
RBR57%27101#&	27,100	3/4	L, U	T, Q, A, B	R	P	ULT
RBR57%27401#&	27,400	3/4	L, U	T, Q, A, B	R	P	ULT
RBR57%27701#&	27,700	3/4	L, U	T, Q, A, B	R	P	ULT
RBR57%28001#&	28,000	3/4	L, U	T, Q, A, B	R	P	ULT
RBR57%28401#&	28,400	3/4	L, U	T, Q, A, B	R	P	ULT
RBR57%28701#&	28,700	3/4	L, U	T, Q, A, B	R	P	ULT
RBR57%29101#&	29,100	3/4	L, U	T, Q, A, B	R	P	ULT
RBR57%29401#&	29,400	3/4	L, U	T, Q, A, B	R	P	ULT
RBR57%29801#&	29,800	3/4	L, U	T, Q, A, B	R	P	ULT
RBR57%30101#&	30,100	3/4	L, U	T, Q, A, B	R	P	ULT
RBR57%30501#&	30,500	3/4	L, U	T, Q, A, B	R	P	ULT
RBR57%30901#&	30,900	3/4	L, U	T, Q, A, B	R	P	ULT
RBR57%31201#&	31,200	3/4	L, U	T, Q, A, B	R	P	ULT
RBR57%31601#&	31,600	3/4	L, U	T, Q, A, B	R	P	ULT
RBR57%32001#&	32,000	3/4	L, U	T, Q, A, B	R	P	ULT
RBR57%32401#&	32,400	3/4	L, U	T, Q, A, B	R	P	ULT
RBR57%32801#&	32,800	3/4	L, U	T, Q, A, B	R	P	ULT
RBR57%33201#&	33,200	3/4	L, U	T, Q, A, B	R	P	ULT
RBR57%33601#&	33,600	3/4	L, U	T, Q, A, B	R	P	ULT
RBR57%34001#&	34,000	3/4	L, U	T, Q, A, B	R	P	ULT
RBR57%34401#&	34,400	3/4	L, U	T, Q, A, B	R	P	ULT
RBR57%34801#&	34,800	3/4	L, U	T, Q, A, B	R	P	ULT
RBR57%35201#&	35,200	3/4	L, U	T, Q, A, B	R	P	ULT
RBR57%35701#&	35,700	3/4	L, U	T, Q, A, B	R	P	ULT
RBR57%36101#&	36,100	3/4	L, U	T, Q, A, B	R	P	ULT
RBR57%36501#&	36,500	3/4	L, U	T, Q, A, B	R	P	ULT
RBR57%37001#&	37,000	3/4	L, U	T, Q, A, B	R	P	ULT
RBR57%37401#&	37,400	3/4	L, U	T, Q, A, B	R	P	ULT

RBR57%37901#&	37,900	3/4	L, U	T, Q, A, B	R	P	ULT
RBR57%38301#&	38,300	3/4	L, U	T, Q, A, B	R	P	ULT
RBR57%38801#&	38,800	3/4	L, U	T, Q, A, B	R	P	ULT
RBR57%39201#&	39,200	3/4	L, U	T, Q, A, B	R	P	ULT
RBR57%39701#&	39,700	3/4	L, U	T, Q, A, B	R	P	ULT
RBR57%40201#&	40,200	3/4	L, U	T, Q, A, B	R	P	ULT
RBR57%40701#&	40,700	3/4	L, U	T, Q, A, B	R	P	ULT
RBR57%41201#&	41,200	3/4	L, U	T, Q, A, B	R	P	ULT
RBR57%41701#&	41,700	3/4	L, U	T, Q, A, B	R	P	ULT
RBR57%42201#&	42,200	3/4	L, U	T, Q, A, B	R	P	ULT
RBR57%42701#&	42,700	3/4	L, U	T, Q, A, B	R	P	ULT
RBR57%43201#&	43,200	3/4	L, U	T, Q, A, B	R	P	ULT
RBR57%43701#&	43,700	3/4	L, U	T, Q, A, B	R	P	ULT
RBR57%44201#&	44,200	3/4	L, U	T, Q, A, B	R	P	ULT
RBR57%44801#&	44,800	3/4	L, U	T, Q, A, B	R	P	ULT
RBR57%45301#&	45,300	3/4	L, U	T, Q, A, B	R	P	ULT
RBR57%45901#&	45,900	3/4	L, U	T, Q, A, B	R	P	ULT
RBR57%46401#&	46,400	3/4	L, U	T, Q, A, B	R	P	ULT
RBR57%47001#&	47,000	3/4	L, U	T, Q, A, B	R	P	ULT
RBR57%47501#&	47,500	3/4	L, U	T, Q, A, B	R	P	ULT
RBR57%48101#&	48,100	3/4	L, U	T, Q, A, B	R	P	ULT
RBR57%48701#&	48,700	3/4	L, U	T, Q, A, B	R	P	ULT
RBR57%49301#&	49,300	3/4	L, U	T, Q, A, B	R	P	ULT
RBR57%49901#&	49,900	3/4	L, U	T, Q, A, B	R	P	ULT
RBR57%50501#&	50,500	3/4	L, U	T, Q, A, B	R	P	ULT
RBR57%51101#&	51,100	3/4	L, U	T, Q, A, B	R	P	ULT
RBR57%51701#&	51,700	3/4	L, U	T, Q, A, B	R	P	ULT
RBR57%52301#&	52,300	3/4	L, U	T, Q, A, B	R	P	ULT
RBR57%53001#&	53,000	3/4	L, U	T, Q, A, B	R	P	ULT
RBR57%53601#&	53,600	3/4	L, U	T, Q, A, B	R	P	ULT
RBR57%54201#&	54,200	3/4	L, U	T, Q, A, B	R	P	ULT
RBR57%54901#&	54,900	3/4	L, U	T, Q, A, B	R	P	ULT
RBR57%55601#&	55,600	3/4	L, U	T, Q, A, B	R	P	ULT
RBR57%56201#&	56,200	3/4	L, U	T, Q, A, B	R	P	ULT
RBR57%56901#&	56,900	3/4	L, U	T, Q, A, B	R	P	ULT
RBR57%57601#&	57,600	3/4	L, U	T, Q, A, B	R	P	ULT
RBR57%58301#&	58,300	3/4	L, U	T, Q, A, B	R	P	ULT
RBR57%59001#&	59,000	3/4	L, U	T, Q, A, B	R	P	ULT
RBR57%59701#&	59,700	3/4	L, U	T, Q, A, B	R	P	ULT
RBR57%60401#&	60,400	3/4	L, U	T, Q, A, B	R	P	ULT
RBR57%61201#&	61,200	3/4	L, U	T, Q, A, B	R	P	ULT
RBR57%61901#&	61,900	3/4	L, U	T, Q, A, B	R	P	ULT
RBR57%62601#&	62,600	3/4	L, U	T, Q, A, B	R	P	ULT
RBR57%63401#&	63,400	3/4	L, U	T, Q, A, B	R	P	ULT
RBR57%64201#&	64,200	3/4	L, U	T, Q, A, B	R	P	ULT
RBR57%64901#&	64,900	3/4	L, U	T, Q, A, B	R	P	ULT
RBR57%65701#&	65,700	3/4	L, U	T, Q, A, B	R	P	ULT

RBR57%66501#&	66,500	3/4	L, U	T, Q, A, B	R	P	ULT
RBR57%67301#&	67,300	3/4	L, U	T, Q, A, B	R	P	ULT
RBR57%68101#&	68,100	3/4	L, U	T, Q, A, B	R	P	ULT
RBR57%69001#&	69,000	3/4	L, U	T, Q, A, B	R	P	ULT
RBR57%69801#&	69,800	3/4	L, U	T, Q, A, B	R	P	ULT
RBR57%70601#&	70,600	3/4	L, U	T, Q, A, B	R	P	ULT
RBR57%71501#&	71,500	3/4	L, U	T, Q, A, B	R	P	ULT
RBR57%72301#&	72,300	3/4	L, U	T, Q, A, B	R	P	ULT
RBR57%73201#&	73,200	3/4	L, U	T, Q, A, B	R	P	ULT
RBR57%74101#&	74,100	3/4	L, U	T, Q, A, B	R	P	ULT
RBR57%75001#&	75,000	3/4	L, U	T, Q, A, B	R	P	ULT
RBR57%75901#&	75,900	3/4	L, U	T, Q, A, B	R	P	ULT
RBR57%76802#&	76,800	3/4	L, U	T, Q, A, B	R	P	ULT
RBR57%77702#&	77,700	3/4	L, U	T, Q, A, B	R	P	ULT
RBR57%78702#&	78,700	3/4	L, U	T, Q, A, B	R	P	ULT
RBR57%79602#&	79,600	3/4	L, U	T, Q, A, B	R	P	ULT
RBR57%80602#&	80,600	3/4	L, U	T, Q, A, B	R	P	ULT
RBR57%81602#&	81,600	3/4	L, U	T, Q, A, B	R	P	ULT
RBR57%82502#&	82,500	3/4	L, U	T, Q, A, B	R	P	ULT
RBR57%83502#&	83,500	3/4	L, U	T, Q, A, B	R	P	ULT
RBR57%84502#&	84,500	3/4	L, U	T, Q, A, B	R	P	ULT
RBR57%85602#&	85,600	3/4	L, U	T, Q, A, B	R	P	ULT
RBR57%86602#&	86,600	3/4	L, U	T, Q, A, B	R	P	ULT
RBR57%87602#&	87,600	3/4	L, U	T, Q, A, B	R	P	ULT
RBR57%88702#&	88,700	3/4	L, U	T, Q, A, B	R	P	ULT
RBR57%89802#&	89,800	3/4	L, U	T, Q, A, B	R	P	ULT
RBR57%90902#&	90,900	3/4	L, U	T, Q, A, B	R	P	ULT
RBR57%92002#&	92,000	3/4	L, U	T, Q, A, B	R	P	ULT
RBR57%93102#&	93,100	3/4	L, U	T, Q, A, B	R	P	ULT
RBR57%94202#&	94,200	3/4	L, U	T, Q, A, B	R	P	ULT
RBR57%95302#&	95,300	3/4	L, U	T, Q, A, B	R	P	ULT
RBR57%96502#&	96,500	3/4	L, U	T, Q, A, B	R	P	ULT
RBR57%97602#&	97,600	3/4	L, U	T, Q, A, B	R	P	ULT
RBR57%98802#&	98,800	3/4	L, U	T, Q, A, B	R	P	ULT
RBR57%10002#&	100,000	3/4	L, U	T, Q, A, B	R	P	ULT
RBR57%10102#&	101,000	3/4	L, U	T, Q, A, B	R	P	ULT
RBR57%10202#&	102,000	3/4	L, U	T, Q, A, B	R	P	ULT
RBR57%10402#&	104,000	3/4	L, U	T, Q, A, B	R	P	ULT
RBR57%10502#&	105,000	3/4	L, U	T, Q, A, B	R	P	ULT
RBR57%10602#&	106,000	3/4	L, U	T, Q, A, B	R	P	ULT
RBR57%10702#&	107,000	3/4	L, U	T, Q, A, B	R	P	ULT
RBR57%10902#&	109,000	3/4	L, U	T, Q, A, B	R	P	ULT
RBR57%11002#&	110,000	3/4	L, U	T, Q, A, B	R	P	ULT
RBR57%11102#&	111,000	3/4	L, U	T, Q, A, B	R	P	ULT
RBR57%11302#&	113,000	3/4	L, U	T, Q, A, B	R	P	ULT
RBR57%11402#&	114,000	3/4	L, U	T, Q, A, B	R	P	ULT
RBR57%11502#&	115,000	3/4	L, U	T, Q, A, B	R	P	ULT

RBR57%11702#&	117,000	3/4	L, U	T, Q, A, B	R	P	ULT
RBR57%11802#&	118,000	3/4	L, U	T, Q, A, B	R	P	ULT
RBR57%12002#&	120,000	3/4	L, U	T, Q, A, B	R	P	ULT
RBR57%12102#&	121,000	3/4	L, U	T, Q, A, B	R	P	ULT
RBR57%12302#&	123,000	3/4	L, U	T, Q, A, B	R	P	ULT
RBR57%12402#&	124,000	3/4	L, U	T, Q, A, B	R	P	ULT
RBR57%12602#&	126,000	3/4	L, U	T, Q, A, B	R	P	ULT
RBR57%12702#&	127,000	3/4	L, U	T, Q, A, B	R	P	ULT
RBR57%12902#&	129,000	3/4	L, U	T, Q, A, B	R	P	ULT
RBR57%13002#&	130,000	3/4	L, U	T, Q, A, B	R	P	ULT
RBR57%13202#&	132,000	3/4	L, U	T, Q, A, B	R	P	ULT
RBR57%13302#&	133,000	3/4	L, U	T, Q, A, B	R	P	ULT
RBR57%13502#&	135,000	3/4	L, U	T, Q, A, B	R	P	ULT
RBR57%13702#&	137,000	3/4	L, U	T, Q, A, B	R	P	ULT
RBR57%13802#&	138,000	3/4	L, U	T, Q, A, B	R	P	ULT
RBR57%14002#&	140,000	3/4	L, U	T, Q, A, B	R	P	ULT
RBR57%14202#&	142,000	3/4	L, U	T, Q, A, B	R	P	ULT
RBR57%14302#&	143,000	3/4	L, U	T, Q, A, B	R	P	ULT
RBR57%14502#&	145,000	3/4	L, U	T, Q, A, B	R	P	ULT
RBR57%14702#&	147,000	3/4	L, U	T, Q, A, B	R	P	ULT
RBR57%14902#&	149,000	3/4	L, U	T, Q, A, B	R	P	ULT
RBR57%15002#&	150,000	3/4	L, U	T, Q, A, B	R	P	ULT
RBR57%15202#&	152,000	3/4	L, U	T, Q, A, B	R	P	ULT
RBR57%15402#&	154,000	3/4	L, U	T, Q, A, B	R	P	ULT
RBR57%15602#&	156,000	3/4	L, U	T, Q, A, B	R	P	ULT
RBR57%15802#&	158,000	3/4	L, U	T, Q, A, B	R	P	ULT
RBR57%16002#&	160,000	3/4	L, U	T, Q, A, B	R	P	ULT
RBR57%16202#&	162,000	3/4	L, U	T, Q, A, B	R	P	ULT
RBR57%16402#&	164,000	3/4	L, U	T, Q, A, B	R	P	ULT
RBR57%16502#&	165,000	3/4	L, U	T, Q, A, B	R	P	ULT
RBR57%16702#&	167,000	3/4	L, U	T, Q, A, B	R	P	ULT
RBR57%16902#&	169,000	3/4	L, U	T, Q, A, B	R	P	ULT
RBR57%17202#&	172,000	3/4	L, U	T, Q, A, B	R	P	ULT
RBR57%17402#&	174,000	3/4	L, U	T, Q, A, B	R	P	ULT
RBR57%17602#&	176,000	3/4	L, U	T, Q, A, B	R	P	ULT
RBR57%17802#&	178,000	3/4	L, U	T, Q, A, B	R	P	ULT
RBR57%18002#&	180,000	3/4	L, U	T, Q, A, B	R	P	ULT
RBR57%18202#&	182,000	3/4	L, U	T, Q, A, B	R	P	ULT
RBR57%18402#&	184,000	3/4	L, U	T, Q, A, B	R	P	ULT
RBR57%18702#&	187,000	3/4	L, U	T, Q, A, B	R	P	ULT
RBR57%18902#&	189,000	3/4	L, U	T, Q, A, B	R	P	ULT
RBR57%19102#&	191,000	3/4	L, U	T, Q, A, B	R	P	ULT
RBR57%19302#&	193,000	3/4	L, U	T, Q, A, B	R	P	ULT
RBR57%19602#&	196,000	3/4	L, U	T, Q, A, B	R	P	ULT
RBR57%19802#&	198,000	3/4	L, U	T, Q, A, B	R	P	ULT
RBR57%20002#&	200,000	3/4	L, U	T, Q, A, B	R	P	ULT
RBR57%20302#&	203,000	3/4	L, U	T, Q, A, B	R	P	ULT

RBR57%20502#&	205,000	3/4	L, U	T, Q, A, B	R	P	ULT
RBR57%20802#&	208,000	3/4	L, U	T, Q, A, B	R	P	ULT
RBR57%21002#&	210,000	3/4	L, U	T, Q, A, B	R	P	ULT
RBR57%21302#&	213,000	3/4	L, U	T, Q, A, B	R	P	ULT
RBR57%21502#&	215,000	3/4	L, U	T, Q, A, B	R	P	ULT
RBR57%21802#&	218,000	3/4	L, U	T, Q, A, B	R	P	ULT
RBR57%22102#&	221,000	3/4	L, U	T, Q, A, B	R	P	ULT
RBR57%22302#&	223,000	3/4	L, U	T, Q, A, B	R	P	ULT
RBR57%22602#&	226,000	3/4	L, U	T, Q, A, B	R	P	ULT
RBR57%22902#&	229,000	3/4	L, U	T, Q, A, B	R	P	ULT
RBR57%23202#&	232,000	3/4	L, U	T, Q, A, B	R	P	ULT
RBR57%23402#&	234,000	3/4	L, U	T, Q, A, B	R	P	ULT
RBR57%23702#&	237,000	3/4	L, U	T, Q, A, B	R	P	ULT
RBR57%24002#&	240,000	3/4	L, U	T, Q, A, B	R	P	ULT
RBR57%24302#&	243,000	3/4	L, U	T, Q, A, B	R	P	ULT
RBR57%24602#&	246,000	3/4	L, U	T, Q, A, B	R	P	ULT
RBR57%24902#&	249,000	3/4	L, U	T, Q, A, B	R	P	ULT
RBR57%25202#&	252,000	3/4	L, U	T, Q, A, B	R	P	ULT
RBR57%25502#&	255,000	3/4	L, U	T, Q, A, B	R	P	ULT
RBR57%25802#&	258,000	3/4	L, U	T, Q, A, B	R	P	ULT
RBR57%26102#&	261,000	3/4	L, U	T, Q, A, B	R	P	ULT
RBR57%26402#&	264,000	3/4	L, U	T, Q, A, B	R	P	ULT
RBR57%26702#&	267,000	3/4	L, U	T, Q, A, B	R	P	ULT
RBR57%27102#&	271,000	3/4	L, U	T, Q, A, B	R	P	ULT
RBR57%27402#&	274,000	3/4	L, U	T, Q, A, B	R	P	ULT
RBR57%27702#&	277,000	3/4	L, U	T, Q, A, B	R	P	ULT
RBR57%28002#&	280,000	3/4	L, U	T, Q, A, B	R	P	ULT
RBR57%28402#&	284,000	3/4	L, U	T, Q, A, B	R	P	ULT
RBR57%28702#&	287,000	3/4	L, U	T, Q, A, B	R	P	ULT
RBR57%29102#&	291,000	3/4	L, U	T, Q, A, B	R	P	ULT
RBR57%29402#&	294,000	3/4	L, U	T, Q, A, B	R	P	ULT
RBR57%29802#&	298,000	3/4	L, U	T, Q, A, B	R	P	ULT
RBR57%30102#&	301,000	3/4	L, U	T, Q, A, B	R	P	ULT
RBR57%30502#&	305,000	3/4	L, U	T, Q, A, B	R	P	ULT
RBR57%30902#&	309,000	3/4	L, U	T, Q, A, B	R	P	ULT
RBR57%31202#&	312,000	3/4	L, U	T, Q, A, B		P	ULT
RBR57%31602#&	316,000	3/4	L, U	T, Q, A, B		P	ULT
RBR57%32002#&	320,000	3/4	L, U	T, Q, A, B		P	ULT
RBR57%32402#&	324,000	3/4	L, U	T, Q, A, B		P	ULT
RBR57%32802#&	328,000	3/4	L, U	T, Q, A, B		P	ULT
RBR57%33202#&	332,000	3/4	L, U	T, Q, A, B		P	ULT
RBR57%33602#&	336,000	3/4	L, U	T, Q, A, B		P	ULT
RBR57%34002#&	340,000	3/4	L, U	T, Q, A, B		P	ULT
RBR57%34402#&	344,000	3/4	L, U	T, Q, A, B		P	ULT
RBR57%34802#&	348,000	3/4	L, U	T, Q, A, B		P	ULT
RBR57%35202#&	352,000	3/4	L, U	T, Q, A, B		P	ULT
RBR57%35702#&	357,000	3/4	L, U	T, Q, A, B		P	ULT

RBR57%36102#&	361,000	3/4	L, U	T, Q, A, B		P	ULT
RBR57%36502#&	365,000	3/4	L, U	T, Q, A, B		P	ULT
RBR57%37002#&	370,000	3/4	L, U	T, Q, A, B		P	ULT
RBR57%37402#&	374,000	3/4	L, U	T, Q, A, B		P	ULT
RBR57%37902#&	379,000	3/4	L, U	T, Q, A, B		P	ULT
RBR57%38302#&	383,000	3/4	L, U	T, Q, A, B		P	ULT
RBR57%38802#&	388,000	3/4	L, U	T, Q, A, B		P	ULT
RBR57%39202#&	392,000	3/4	L, U	T, Q, A, B		P	ULT
RBR57%39702#&	397,000	3/4	L, U	T, Q, A, B		P	ULT
RBR57%40202#&	402,000	3/4	L, U	T, Q, A, B		P	ULT
RBR57%40702#&	407,000	3/4	L, U	T, Q, A, B		P	ULT
RBR57%41202#&	412,000	3/4	L, U	T, Q, A, B		P	ULT
RBR57%41702#&	417,000	3/4	L, U	T, Q, A, B		P	ULT
RBR57%42202#&	422,000	3/4	L, U	T, Q, A, B		P	ULT
RBR57%42702#&	427,000	3/4	L, U	T, Q, A, B		P	ULT
RBR57%43202#&	432,000	3/4	L, U	T, Q, A, B		P	ULT
RBR57%43702#&	437,000	3/4	L, U	T, Q, A, B		P	ULT
RBR57%44202#&	442,000	3/4	L, U	T, Q, A, B		P	ULT
RBR57%44802#&	448,000	3/4	L, U	T, Q, A, B		P	ULT
RBR57%45302#&	453,000	3/4	L, U	T, Q, A, B		P	ULT
RBR57%45902#&	459,000	3/4	L, U	T, Q, A, B		P	ULT
RBR57%46402#&	464,000	3/4	L, U	T, Q, A, B		P	ULT
RBR57%47002#&	470,000	3/4	L, U	T, Q, A, B		P	ULT
RBR57%47502#&	475,000	3/4	L, U	T, Q, A, B		P	ULT
RBR57%48102#&	481,000	3/4	L, U	T, Q, A, B		P	ULT
RBR57%48702#&	487,000	3/4	L, U	T, Q, A, B		P	ULT
RBR57%49302#&	493,000	3/4	L, U	T, Q, A, B		P	ULT
RBR57%49902#&	499,000	3/4	L, U	T, Q, A, B		P	ULT
RBR57%50502#&	505,000	3/4	L, U	T, Q, A, B		P	ULT
RBR57%51102#&	511,000	3/4	L, U	T, Q, A, B		P	ULT
RBR57%51702#&	517,000	3/4	L, U	T, Q, A, B		P	ULT
RBR57%52302#&	523,000	3/4	L, U	T, Q, A, B		P	ULT
RBR57%53002#&	530,000	3/4	L, U	T, Q, A, B		P	ULT
RBR57%53602#&	536,000	3/4	L, U	T, Q, A, B		P	ULT
RBR57%54202#&	542,000	3/4	L, U	T, Q, A, B		P	ULT
RBR57%54902#&	549,000	3/4	L, U	T, Q, A, B		P	ULT
RBR57%55602#&	556,000	3/4	L, U	T, Q, A, B		P	ULT
RBR57%56202#&	562,000	3/4	L, U	T, Q, A, B		P	ULT
RBR57%56902#&	569,000	3/4	L, U	T, Q, A, B		P	ULT
RBR57%57602#&	576,000	3/4	L, U	T, Q, A, B		P	ULT
RBR57%58302#&	583,000	3/4	L, U	T, Q, A, B		P	ULT
RBR57%59002#&	590,000	3/4	L, U	T, Q, A, B		P	ULT
RBR57%59702#&	597,000	3/4	L, U	T, Q, A, B		P	ULT
RBR57%60402#&	604,000	3/4	L, U	T, Q, A, B		P	ULT
RBR57%61202#&	612,000	3/4	L, U	T, Q, A, B		P	ULT
RBR57%61902#&	619,000	3/4	L, U	T, Q, A, B		P	ULT
RBR57%62602#&	626,000	3/4	L, U	T, Q, A, B		P	ULT

RBR57%63402#&	634,000	3/4	L, U	T, Q, A, B		P	ULT
RBR57%64202#&	642,000	3/4	L, U	T, Q, A, B		P	ULT
RBR57%64902#&	649,000	3/4	L, U	T, Q, A, B		P	ULT
RBR57%65702#&	657,000	3/4	L, U	T, Q, A, B		P	ULT
RBR57%66502#&	665,000	3/4	L, U	T, Q, A, B		P	ULT
RBR57%67302#&	673,000	3/4	L, U	T, Q, A, B		P	ULT
RBR57%68102#&	681,000	3/4	L, U	T, Q, A, B		P	ULT
RBR57%69002#&	690,000	3/4	L, U	T, Q, A, B		P	ULT
RBR57%69802#&	698,000	3/4	L, U	T, Q, A, B		P	ULT
RBR57%70602#&	706,000	3/4	L, U	T, Q, A, B		P	ULT
RBR57%71502#&	715,000	3/4	L, U	T, Q, A, B		P	ULT
RBR57%72302#&	723,000	3/4	L, U	T, Q, A, B		P	ULT
RBR57%73202#&	732,000	3/4	L, U	T, Q, A, B		P	ULT
RBR57%74102#&	741,000	3/4	L, U	T, Q, A, B		P	ULT
RBR57%75002#&	750,000	3/4	L, U	T, Q, A, B		P	ULT
RBR57%75902#&	759,000	3/4	L, U	T, Q, A, B		P	ULT
RBR57%76802#&	768,000	3/4	L, U	T, Q, A, B		P	ULT
RBR57%77702#&	777,000	3/4	L, U	T, Q, A, B		P	ULT
RBR57%78702#&	787,000	3/4	L, U	T, Q, A, B		P	ULT
RBR57%79602#&	796,000	3/4	L, U	T, Q, A, B		P	ULT
RBR57%80602#&	806,000	3/4	L, U	T, Q, A, B		P	ULT
RBR57%81602#&	816,000	3/4	L, U	T, Q, A, B		P	ULT
RBR57%82502#&	825,000	3/4	L, U	T, Q, A, B		P	ULT
RBR57%83502#&	835,000	3/4	L, U	T, Q, A, B		P	ULT
RBR57%84502#&	845,000	3/4	L, U	T, Q, A, B		P	ULT
RBR57%85602#&	856,000	3/4	L, U	T, Q, A, B		P	ULT
RBR57%86602#&	866,000	3/4	L, U	T, Q, A, B		P	ULT
RBR57%87602#&	876,000	3/4	L, U	T, Q, A, B		P	ULT
RBR57%88702#&	887,000	3/4	L, U	T, Q, A, B		P	ULT
RBR57%89802#&	898,000	3/4	L, U	T, Q, A, B		P	ULT
RBR57%90902#&	909,000	3/4	L, U	T, Q, A, B		P	ULT
RBR57%92002#&	920,000	3/4	L, U	T, Q, A, B		P	ULT
RBR57%93102#&	931,000	3/4	L, U	T, Q, A, B		P	ULT
RBR57%94202#&	942,000	3/4	L, U	T, Q, A, B		P	ULT
RBR57%95302#&	953,000	3/4	L, U	T, Q, A, B		P	ULT
RBR57%96502#&	965,000	3/4	L, U	T, Q, A, B		P	ULT
RBR57%97602#&	976,000	3/4	L, U	T, Q, A, B		P	ULT
RBR57%98802#&	988,000	3/4	L, U	T, Q, A, B		P	ULT
RBR57%10003#&	1,000,000	3/4	L, U	T, Q, A, B		P	ULT
RBR57%10103#&	1,010,000	3/4	L, U	T, Q, A, B		P	ULT
RBR57%10203#&	1,020,000	3/4	L, U	T, Q, A, B		P	ULT
RBR57%10403#&	1,040,000	3/4	L, U	T, Q, A, B		P	ULT
RBR57%10503#&	1,050,000	3/4	L, U	T, Q, A, B		P	ULT
RBR57%10603#&	1,060,000	3/4	L, U	T, Q, A, B		P	ULT
RBR57%10703#&	1,070,000	3/4	L, U	T, Q, A, B		P	ULT
RBR57%10903#&	1,090,000	3/4	L, U	T, Q, A, B		P	ULT
RBR57%11003#&	1,100,000	3/4	L, U	T, Q, A, B		P	ULT

RBR57%11103#&	1,110,000	3/4	L, U	T, Q, A, B		P	ULT
RBR57%11303#&	1,130,000	3/4	L, U	T, Q, A, B		P	ULT
RBR57%11403#&	1,140,000	3/4	L, U	T, Q, A, B		P	ULT
RBR57%11503#&	1,150,000	3/4	L, U	T, Q, A, B		P	ULT
RBR57%11703#&	1,170,000	3/4	L, U	T, Q, A, B		P	ULT
RBR57%11803#&	1,180,000	3/4	L, U	T, Q, A, B		P	ULT
RBR57%12003#&	1,200,000	3/4	L, U	T, Q, A, B		P	ULT
RBR57%12103#&	1,210,000	3/4	L, U	T, Q, A, B		P	ULT
RBR57%12303#&	1,230,000	3/4	L, U	T, Q, A, B		P	ULT
RBR57%12403#&	1,240,000	3/4	L, U	T, Q, A, B		P	ULT
RBR57%12603#&	1,260,000	3/4	L, U	T, Q, A, B		P	ULT
RBR57%12703#&	1,270,000	3/4	L, U	T, Q, A, B		P	ULT
RBR57%12903#&	1,290,000	3/4	L, U	T, Q, A, B		P	ULT
RBR57%13003#&	1,300,000	3/4	L, U	T, Q, A, B		P	ULT
RBR57%13203#&	1,320,000	3/4	L, U	T, Q, A, B		P	ULT
RBR57%13303#&	1,330,000	3/4	L, U	T, Q, A, B		P	ULT
RBR57%13503#&	1,350,000	3/4	L, U	T, Q, A, B		P	ULT
RBR57%13703#&	1,370,000	3/4	L, U	T, Q, A, B		P	ULT

RBR57 RESISTORS DECADE BREAKDOWN

Click on the link below to see the associated parts selection listing:

Resistance Range
10.00 Ohms through 98.80 Ohms
100.0 Ohms through 988.0 Ohms
1,000 Ohms through 9,880 Ohms
10,000 Ohms through 98,800 Ohms
100,000 Ohms through 988,000 Ohms
1,000,000 Ohms through 1,370,000 Ohms

RBR57 Wirewound Resistors: 10.00 Ohms through 98.80 Ohms

	Resistance	Power	Terminal	Resistance	Level 1	Level 2	
Part Number	Value (Ohms)	Rating (W)	Characteristic (#)	Tolerance (%)	(FRL)(&)	(FRL)(&)	Manufacturer
RBR57#10R00%&	10.00	3/4	L, U	T, Q, A, B	R	P	NO SOURCE
RBR57#10R10%&	10.10	3/4	L, U	T, Q, A, B	R	P	NO SOURCE
RBR57#10R20%&	10.20	3/4	L, U	T, Q, A, B	R	P	NO SOURCE
RBR57#10R40%&	10.40	3/4	L, U	T, Q, A, B	R	P	NO SOURCE
RBR57#10R50%&	10.50	3/4	L, U	T, Q, A, B	R	P	NO SOURCE
RBR57#10R60%&	10.60	3/4	L, U	T, Q, A, B	R	P	NO SOURCE
RBR57#10R70%&	10.70	3/4	L, U	T, Q, A, B	R	P	NO SOURCE
RBR57#10R90%&	10.90	3/4	L, U	T, Q, A, B	R	P	NO SOURCE
RBR57#11R00%&	11.00	3/4	L, U	T, Q, A, B	R	P	NO SOURCE
RBR57#11R10%&	11.10	3/4	L, U	T, Q, A, B	R	P	NO SOURCE

RBR57#11R30%&	11.30	3/4	L, U	T, Q, A, B	R	P	NO SOURCE
RBR57#11R40%&	11.40	3/4	L, U	T, Q, A, B	R	P	NO SOURCE
RBR57#11R50%&	11.50	3/4	L, U	T, Q, A, B	R	P	NO SOURCE
RBR57#11R70%&	11.70	3/4	L, U	T, Q, A, B	R	P	NO SOURCE
	Resistance	Power	Terminal	Resistance	Level 1	Level 2	
Part Number	Value (Ohms)	Rating (W)	Characteristic (#)	Tolerance (%)	(FRL)(&)	(FRL)(&)	Manufacturer
RBR57#11R80%&	11.80	3/4	L, U	T, Q, A, B	R	P	NO SOURCE
RBR57#12R00%&	12.00	3/4	L, U	T, Q, A, B	R	P	NO SOURCE
RBR57#12R10%&	12.10	3/4	L, U	T, Q, A, B	R	P	NO SOURCE
RBR57#12R30%&	12.30	3/4	L, U	T, Q, A, B	R	P	NO SOURCE
RBR57#12R40%&	12.40	3/4	L, U	T, Q, A, B	R	P	NO SOURCE
RBR57#12R60%&	12.60	3/4	L, U	T, Q, A, B	R	P	NO SOURCE
RBR57#12R70%&	12.70	3/4	L, U	T, Q, A, B	R	P	NO SOURCE
RBR57#12R90%&	12.90	3/4	L, U	T, Q, A, B	R	P	NO SOURCE
RBR57#13R00%&	13.00	3/4	L, U	T, Q, A, B	R	P	NO SOURCE
RBR57#13R20%&	13.20	3/4	L, U	T, Q, A, B	R	P	NO SOURCE
RBR57#13R30%&	13.30	3/4	L, U	T, Q, A, B	R	P	NO SOURCE
RBR57#13R50%&	13.50	3/4	L, U	T, Q, A, B	R	P	NO SOURCE
RBR57#13R70%&	13.70	3/4	L, U	T, Q, A, B	R	P	NO SOURCE
RBR57#13R80%&	13.80	3/4	L, U	T, Q, A, B	R	P	NO SOURCE
	Resistance	Power	Terminal	Resistance	Level 1	Level 2	
Part Number	Value (Ohms)	Rating (W)	Characteristic (#)	Tolerance (%)	(FRL)(&)	(FRL)(&)	Manufacturer
RBR57#14R00%&	14.00	3/4	L, U	T, Q, A, B	R	P	NO SOURCE
RBR57#14R20%&	14.20	3/4	L, U	T, Q, A, B	R	P	NO SOURCE
RBR57#14R30%&	14.30	3/4	L, U	T, Q, A, B	R	P	NO SOURCE
RBR57#14R50%&	14.50	3/4	L, U	T, Q, A, B	R	P	NO SOURCE
RBR57#14R70%&	14.70	3/4	L, U	T, Q, A, B	R	P	NO SOURCE
RBR57#14R90%&	14.90	3/4	L, U	T, Q, A, B	R	P	NO SOURCE
RBR57#15R00%&	15.00	3/4	L, U	T, Q, A, B	R	P	NO SOURCE
RBR57#15R20%&	15.20	3/4	L, U	T, Q, A, B	R	P	NO SOURCE
RBR57#15R40%&	15.40	3/4	L, U	T, Q, A, B	R	P	NO SOURCE
RBR57#15R60%&	15.60	3/4	L, U	T, Q, A, B	R	P	NO SOURCE
RBR57#15R80%&	15.80	3/4	L, U	T, Q, A, B	R	P	NO SOURCE
RBR57#16R00%&	16.00	3/4	L, U	T, Q, A, B	R	P	NO SOURCE
RBR57#16R20%&	16.20	3/4	L, U	T, Q, A, B	R	P	NO SOURCE
RBR57#16R40%&	16.40	3/4	L, U	T, Q, A, B	R	P	NO SOURCE
	Resistance	Power	Terminal	Resistance	Level 1	Level 2	
Part Number	Value (Ohms)	Rating (W)	Characteristic (#)	Tolerance (%)	(FRL)(&)	(FRL)(&)	Manufacturer
RBR57#16R50%&	16.50	3/4	L, U	T, Q, A, B	R	P	NO SOURCE
RBR57#16R70%&	16.70	3/4	L, U	T, Q, A, B	R	P	NO SOURCE
RBR57#16R90%&	16.90	3/4	L, U	T, Q, A, B	R	P	NO SOURCE
RBR57#17R20%&	17.20	3/4	L, U	T, Q, A, B	R	P	NO SOURCE
RBR57#17R40%&	17.40	3/4	L, U	T, Q, A, B	R	P	NO SOURCE
RBR57#17R60%&	17.60	3/4	L, U	T, Q, A, B	R	P	NO SOURCE
RBR57#17R80%&	17.80	3/4	L, U	T, Q, A, B	R	P	NO SOURCE
RBR57#18R00%&	18.00	3/4	L, U	T, Q, A, B	R	P	NO SOURCE
RBR57#18R20%&	18.20	3/4	L, U	T, Q, A, B	R	P	NO SOURCE

RBR57#18R40%&	18.40	3/4	L, U	T, Q, A, B	R	P	NO SOURCE
RBR57#18R70%&	18.70	3/4	L, U	T, Q, A, B	R	P	NO SOURCE
RBR57#18R90%&	18.90	3/4	L, U	T, Q, A, B	R	P	NO SOURCE
RBR57#19R10%&	19.10	3/4	L, U	T, Q, A, B	R	P	NO SOURCE
RBR57#19R30%&	19.30	3/4	L, U	T, Q, A, B	R	P	NO SOURCE
	Resistance	Power	Terminal	Resistance	Level 1	Level 2	
Part Number	Value (Ohms)	Rating (W)	Characteristic (#)	Tolerance (%)	(FRL)(&)	(FRL)(&)	Manufacturer
RBR57#19R60%&	19.60	3/4	L, U	T, Q, A, B	R	P	NO SOURCE
RBR57#19R80%&	19.80	3/4	L, U	T, Q, A, B	R	P	NO SOURCE
RBR57#20R00%&	20.00	3/4	L, U	T, Q, A, B	R	P	NO SOURCE
RBR57#20R30%&	20.30	3/4	L, U	T, Q, A, B	R	P	NO SOURCE
RBR57#20R50%&	20.50	3/4	L, U	T, Q, A, B	R	P	NO SOURCE
RBR57#20R80%&	20.80	3/4	L, U	T, Q, A, B	R	P	NO SOURCE
RBR57#21R00%&	21.00	3/4	L, U	T, Q, A, B	R	P	NO SOURCE
RBR57#21R30%&	21.30	3/4	L, U	T, Q, A, B	R	P	NO SOURCE
RBR57#21R50%&	21.50	3/4	L, U	T, Q, A, B	R	P	NO SOURCE
RBR57#21R80%&	21.80	3/4	L, U	T, Q, A, B	R	P	NO SOURCE
RBR57#22R10%&	22.10	3/4	L, U	T, Q, A, B	R	P	NO SOURCE
RBR57#22R30%&	22.30	3/4	L, U	T, Q, A, B	R	P	NO SOURCE
RBR57#22R60%&	22.60	3/4	L, U	T, Q, A, B	R	P	NO SOURCE
RBR57#22R90%&	22.90	3/4	L, U	T, Q, A, B	R	P	NO SOURCE
	Resistance	Power	Terminal	Resistance	Level 1	Level 2	
Part Number	Value (Ohms)	Rating (W)	Characteristic (#)	Tolerance (%)	(FRL)(&)	(FRL)(&)	Manufacturer
RBR57#23R20%&	23.20	3/4	L, U	T, Q, A, B	R	P	NO SOURCE
RBR57#23R40%&	23.40	3/4	L, U	T, Q, A, B	R	P	NO SOURCE
RBR57#23R70%&	23.70	3/4	L, U	T, Q, A, B	R	P	NO SOURCE
RBR57#24R00%&	24.00	3/4	L, U	T, Q, A, B	R	P	NO SOURCE
RBR57#24R30%&	24.30	3/4	L, U	T, Q, A, B	R	P	NO SOURCE
RBR57#24R60%&	24.60	3/4	L, U	T, Q, A, B	R	P	NO SOURCE
RBR57#24R90%&	24.90	3/4	L, U	T, Q, A, B	R	P	NO SOURCE
RBR57#25R20%&	25.20	3/4	L, U	T, Q, A, B	R	P	NO SOURCE
RBR57#25R50%&	25.50	3/4	L, U	T, Q, A, B	R	P	NO SOURCE
RBR57#25R80%&	25.80	3/4	L, U	T, Q, A, B	R	P	NO SOURCE
RBR57#26R10%&	26.10	3/4	L, U	T, Q, A, B	R	P	NO SOURCE
RBR57#26R40%&	26.40	3/4	L, U	T, Q, A, B	R	P	NO SOURCE
RBR57#26R70%&	26.70	3/4	L, U	T, Q, A, B	R	P	NO SOURCE
RBR57#27R10%&	27.10	3/4	L, U	T, Q, A, B	R	P	NO SOURCE
	Resistance	Power	Terminal	Resistance	Level 1	Level 2	
Part Number	Value (Ohms)	Rating (W)	Characteristic (#)	Tolerance (%)	(FRL)(&)	(FRL)(&)	Manufacturer
RBR57#27R40%&	27.40	3/4	L, U	T, Q, A, B	R	P	NO SOURCE
RBR57#27R70%&	27.70	3/4	L, U	T, Q, A, B	R	P	NO SOURCE
RBR57#28R00%&	28.00	3/4	L, U	T, Q, A, B	R	P	NO SOURCE
RBR57#28R40%&	28.40	3/4	L, U	T, Q, A, B	R	P	NO SOURCE
RBR57#28R70%&	28.70	3/4	L, U	T, Q, A, B	R	P	NO SOURCE
RBR57#29R10%&	29.10	3/4	L, U	T, Q, A, B	R	P	NO SOURCE
RBR57#29R40%&	29.40	3/4	L, U	T, Q, A, B	R	P	NO SOURCE
RBR57#29R80%&	29.80	3/4	L, U	T, Q, A, B	R	P	NO SOURCE

RBR57#30R10%&	30.10	3/4	L, U	T, Q, A, B	R	P	NO SOURCE
RBR57#30R50%&	30.50	3/4	L, U	T, Q, A, B	R	P	NO SOURCE
RBR57#30R90%&	30.90	3/4	L, U	T, Q, A, B	R	P	NO SOURCE
RBR57#31R20%&	31.20	3/4	L, U	T, Q, A, B	R	P	NO SOURCE
	Resistance	Power	Terminal	Resistance	Level 1	Level 2	
Part Number	Value (Ohms)	Rating (W)	Characteristic (#)	Tolerance (%)	(FRL)(&)	(FRL)(&)	Manufacturer
RBR57#31R60%&	31.60	3/4	L, U	T, Q, A, B	R	P	NO SOURCE
RBR57#32R00%&	32.00	3/4	L, U	T, Q, A, B	R	P	NO SOURCE
RBR57#32R40%&	32.40	3/4	L, U	T, Q, A, B	R	P	NO SOURCE
RBR57#32R80%&	32.80	3/4	L, U	T, Q, A, B	R	P	NO SOURCE
RBR57#33R20%&	33.20	3/4	L, U	T, Q, A, B	R	P	NO SOURCE
RBR57#33R60%&	33.60	3/4	L, U	T, Q, A, B	R	P	NO SOURCE
RBR57#34R00%&	34.00	3/4	L, U	T, Q, A, B	R	P	NO SOURCE
RBR57#34R40%&	34.40	3/4	L, U	T, Q, A, B	R	P	NO SOURCE
RBR57#34R80%&	34.80	3/4	L, U	T, Q, A, B	R	P	NO SOURCE
RBR57#35R20%&	35.20	3/4	L, U	T, Q, A, B	R	P	NO SOURCE
RBR57#35R70%&	35.70	3/4	L, U	T, Q, A, B	R	P	NO SOURCE
RBR57#36R10%&	36.10	3/4	L, U	T, Q, A, B	R	P	NO SOURCE
RBR57#36R50%&	36.50	3/4	L, U	T, Q, A, B	R	P	NO SOURCE
RBR57#37R00%&	37.00	3/4	L, U	T, Q, A, B	R	P	NO SOURCE
	Resistance	Power	Terminal	Resistance	Level 1	Level 2	
Part Number	Value (Ohms)	Rating (W)	Characteristic (#)	Tolerance (%)	(FRL)(&)	(FRL)(&)	Manufacturer
RBR57#37R40%&	37.40	3/4	L, U	T, Q, A, B	R	P	NO SOURCE
RBR57#37R90%&	37.90	3/4	L, U	T, Q, A, B	R	P	NO SOURCE
RBR57#38R30%&	38.30	3/4	L, U	T, Q, A, B	R	P	NO SOURCE
RBR57#38R80%&	38.80	3/4	L, U	T, Q, A, B	R	P	NO SOURCE
RBR57#39R20%&	39.20	3/4	L, U	T, Q, A, B	R	P	NO SOURCE
RBR57#39R70%&	39.70	3/4	L, U	T, Q, A, B	R	P	NO SOURCE
RBR57#40R20%&	40.20	3/4	L, U	T, Q, A, B	R	P	NO SOURCE
RBR57#40R70%&	40.70	3/4	L, U	T, Q, A, B	R	P	NO SOURCE
RBR57#41R20%&	41.20	3/4	L, U	T, Q, A, B	R	P	NO SOURCE
RBR57#41R70%&	41.70	3/4	L, U	T, Q, A, B	R	P	NO SOURCE
RBR57#42R20%&	42.20	3/4	L, U	T, Q, A, B	R	P	NO SOURCE
RBR57#42R70%&	42.70	3/4	L, U	T, Q, A, B	R	P	NO SOURCE
RBR57#43R20%&	43.20	3/4	L, U	T, Q, A, B	R	P	NO SOURCE
RBR57#43R70%&	43.70	3/4	L, U	T, Q, A, B	R	P	NO SOURCE
	Resistance	Power	Terminal	Resistance	Level 1	Level 2	
Part Number	Value (Ohms)	Rating (W)	Characteristic (#)	Tolerance (%)	(FRL)(&)	(FRL)(&)	Manufacturer
RBR57#44R20%&	44.20	3/4	L, U	T, Q, A, B	R	P	NO SOURCE
RBR57#44R80%&	44.80	3/4	L, U	T, Q, A, B	R	P	NO SOURCE
RBR57#45R30%&	45.30	3/4	L, U	T, Q, A, B	R	P	NO SOURCE
RBR57#45R90%&	45.90	3/4	L, U	T, Q, A, B	R	P	NO SOURCE
RBR57#46R40%&	46.40	3/4	L, U	T, Q, A, B	R	P	NO SOURCE
RBR57#47R00%&	47.00	3/4	L, U	T, Q, A, B	R	P	NO SOURCE
RBR57#47R50%&	47.50	3/4	L, U	T, Q, A, B	R	P	NO SOURCE
RBR57#48R10%&	48.10	3/4	L, U	T, Q, A, B	R	P	NO SOURCE
RBR57#48R70%&	48.70	3/4	L, U	T, Q, A, B	R	P	NO SOURCE

RBR57#49R30%&	49.30	3/4	L, U	T, Q, A, B	R	P	NO SOURCE
RBR57#49R90%&	49.90	3/4	L, U	T, Q, A, B	R	P	NO SOURCE
RBR57#50R50%&	50.50	3/4	L, U	T, Q, A, B	R	P	NO SOURCE
RBR57#51R10%&	51.10	3/4	L, U	T, Q, A, B	R	P	NO SOURCE
RBR57#51R70%&	51.70	3/4	L, U	T, Q, A, B	R	P	NO SOURCE
	Resistance	Power	Terminal	Resistance	Level 1	Level 2	
Part Number	Value (Ohms)	Rating (W)	Characteristic (#)	Tolerance (%)	(FRL)(&)	(FRL)(&)	Manufacturer
RBR57#52R30%&	52.30	3/4	L, U	T, Q, A, B	R	P	NO SOURCE
RBR57#53R00%&	53.00	3/4	L, U	T, Q, A, B	R	P	NO SOURCE
RBR57#53R60%&	53.60	3/4	L, U	T, Q, A, B	R	P	NO SOURCE
RBR57#54R20%&	54.20	3/4	L, U	T, Q, A, B	R	P	NO SOURCE
RBR57#54R90%&	54.90	3/4	L, U	T, Q, A, B	R	P	NO SOURCE
RBR57#55R60%&	55.60	3/4	L, U	T, Q, A, B	R	P	NO SOURCE
RBR57#56R20%&	56.20	3/4	L, U	T, Q, A, B	R	P	NO SOURCE
RBR57#56R90%&	56.90	3/4	L, U	T, Q, A, B	R	P	NO SOURCE
RBR57#57R60%&	57.60	3/4	L, U	T, Q, A, B	R	P	NO SOURCE
RBR57#58R30%&	58.30	3/4	L, U	T, Q, A, B	R	P	NO SOURCE
RBR57#59R00%&	59.00	3/4	L, U	T, Q, A, B	R	P	NO SOURCE
RBR57#59R70%&	59.70	3/4	L, U	T, Q, A, B	R	P	NO SOURCE
RBR57#60R40%&	60.40	3/4	L, U	T, Q, A, B	R	P	NO SOURCE
RBR57#61R20%&	61.20	3/4	L, U	T, Q, A, B	R	P	NO SOURCE
	Resistance	Power	Terminal	Resistance	Level 1	Level 2	
Part Number	Value (Ohms)	Rating (W)	Characteristic (#)	Tolerance (%)	(FRL)(&)	(FRL)(&)	Manufacturer
RBR57#61R90%&	61.90	3/4	L, U	T, Q, A, B	R	P	NO SOURCE
RBR57#62R60%&	62.60	3/4	L, U	T, Q, A, B	R	P	NO SOURCE
RBR57#63R40%&	63.40	3/4	L, U	T, Q, A, B	R	P	NO SOURCE
RBR57#64R20%&	64.20	3/4	L, U	T, Q, A, B	R	P	NO SOURCE
RBR57#64R90%&	64.90	3/4	L, U	T, Q, A, B	R	P	NO SOURCE
RBR57#65R70%&	65.70	3/4	L, U	T, Q, A, B	R	P	NO SOURCE
RBR57#66R50%&	66.50	3/4	L, U	T, Q, A, B	R	P	NO SOURCE
RBR57#67R30%&	67.30	3/4	L, U	T, Q, A, B	R	P	NO SOURCE
RBR57#68R10%&	68.10	3/4	L, U	T, Q, A, B	R	P	NO SOURCE
RBR57#69R00%&	69.00	3/4	L, U	T, Q, A, B	R	P	NO SOURCE
RBR57#69R80%&	69.80	3/4	L, U	T, Q, A, B	R	P	NO SOURCE
RBR57#70R60%&	70.60	3/4	L, U	T, Q, A, B	R	P	NO SOURCE
	Resistance	Power	Terminal	Resistance	Level 1	Level 2	
Part Number	Value (Ohms)	Rating (W)	Characteristic (#)	Tolerance (%)	(FRL)(&)	(FRL)(&)	Manufacturer
RBR57#71R50%&	71.50	3/4	L, U	T, Q, A, B	R	P	NO SOURCE
RBR57#72R30%&	72.30	3/4	L, U	T, Q, A, B	R	P	NO SOURCE
RBR57#73R20%&	73.20	3/4	L, U	T, Q, A, B	R	P	NO SOURCE
RBR57#74R10%&	74.10	3/4	L, U	T, Q, A, B	R	P	NO SOURCE
RBR57#75R00%&	75.00	3/4	L, U	T, Q, A, B	R	P	NO SOURCE
RBR57#75R90%&	75.90	3/4	L, U	T, Q, A, B	R	P	NO SOURCE
RBR57#76R80%&	76.80	3/4	L, U	T, Q, A, B	R	P	NO SOURCE
RBR57#77R70%&	77.70	3/4	L, U	T, Q, A, B	R	P	NO SOURCE
RBR57#78R70%&	78.70	3/4	L, U	T, Q, A, B	R	P	NO SOURCE
RBR57#79R60%&	79.60	3/4	L, U	T, Q, A, B	R	P	NO SOURCE

RBR57#80R60%&	80.60	3/4	L, U	T, Q, A, B	R	P	NO SOURCE
RBR57#81R60%&	81.60	3/4	L, U	T, Q, A, B	R	P	NO SOURCE
RBR57#82R50%&	82.50	3/4	L, U	T, Q, A, B	R	P	NO SOURCE
RBR57#83R50%&	83.50	3/4	L, U	T, Q, A, B	R	P	NO SOURCE
	Resistance	Power	Terminal	Resistance	Level 1	Level 2	
Part Number	Value (Ohms)	Rating (W)	Characteristic (#)	Tolerance (%)	(FRL)(&)	(FRL)(&)	Manufacturer
RBR57#84R50%&	84.50	3/4	L, U	T, Q, A, B	R	P	NO SOURCE
RBR57#85R60%&	85.60	3/4	L, U	T, Q, A, B	R	P	NO SOURCE
RBR57#86R60%&	86.60	3/4	L, U	T, Q, A, B	R	P	NO SOURCE
RBR57#87R60%&	87.60	3/4	L, U	T, Q, A, B	R	P	NO SOURCE
RBR57#88R70%&	88.70	3/4	L, U	T, Q, A, B	R	P	NO SOURCE
RBR57#89R80%&	89.80	3/4	L, U	T, Q, A, B	R	P	NO SOURCE
RBR57#90R90%&	90.90	3/4	L, U	T, Q, A, B	R	P	NO SOURCE
RBR57#92R00%&	92.00	3/4	L, U	T, Q, A, B	R	P	NO SOURCE
RBR57#93R10%&	93.10	3/4	L, U	T, Q, A, B	R	P	NO SOURCE
RBR57#94R20%&	94.20	3/4	L, U	T, Q, A, B	R	P	NO SOURCE
RBR57#95R30%&	95.30	3/4	L, U	T, Q, A, B	R	P	NO SOURCE
RBR57#96R50%&	96.50	3/4	L, U	T, Q, A, B	R	P	NO SOURCE
RBR57#97R60%&	97.60	3/4	L, U	T, Q, A, B	R	P	NO SOURCE
RBR57#98R80%&	98.80	3/4	L, U	T, Q, A, B	R	P	NO SOURCE
	Resistance	Power	Terminal	Resistance	Level 1	Level 2	
Part Number	Value (Ohms)	Rating (W)	Characteristic (#)	Tolerance (%)	(FRL)(&)	(FRL)(&)	Manufacturer

RBR57 Wirewound Resistors: 100.0 Ohms through 988.0 Ohms

	Resistance	Power	Terminal	Resistance	Level 1	Level 2	
Part Number	Value (Ohms)	Rating (W)	Characteristic (#)	Tolerance (%)	(FRL)(&)	(FRL)(&)	Manufacturer
RBR57#100R0%&	100.0	3/4	L, U	T, Q, A, B	R	P	NO SOURCE
RBR57#101R0%&	101.0	3/4	L, U	T, Q, A, B	R	P	NO SOURCE
RBR57#102R0%&	102.0	3/4	L, U	T, Q, A, B	R	P	NO SOURCE
RBR57#104R0%&	104.0	3/4	L, U	T, Q, A, B	R	P	NO SOURCE
RBR57#105R0%&	105.0	3/4	L, U	T, Q, A, B	R	P	NO SOURCE
RBR57#106R0%&	106.0	3/4	L, U	T, Q, A, B	R	P	NO SOURCE
RBR57#107R0%&	107.0	3/4	L, U	T, Q, A, B	R	P	NO SOURCE
RBR57#109R0%&	109.0	3/4	L, U	T, Q, A, B	R	P	NO SOURCE
RBR57#110R0%&	110.0	3/4	L, U	T, Q, A, B	R	P	NO SOURCE
RBR57#111R0%&	111.0	3/4	L, U	T, Q, A, B	R	P	NO SOURCE
RBR57#113R0%&	113.0	3/4	L, U	T, Q, A, B	R	P	NO SOURCE
RBR57#114R0%&	114.0	3/4	L, U	T, Q, A, B	R	P	NO SOURCE
RBR57#115R0%&	115.0	3/4	L, U	T, Q, A, B	R	P	NO SOURCE
RBR57#117R0%&	117.0	3/4	L, U	T, Q, A, B	R	P	NO SOURCE
	Resistance	Power	Terminal	Resistance	Level 1	Level 2	
Part Number	Value (Ohms)	Rating (W)	Characteristic (#)	Tolerance (%)	(FRL)(&)	(FRL)(&)	Manufacturer
RBR57#118R0%&	118.0	3/4	L, U	T, Q, A, B	R	P	NO SOURCE
RBR57#120R0%&	120.0	3/4	L, U	T, Q, A, B	R	P	NO SOURCE

RBR57#121R0%&	121.0	3/4	L, U	T, Q, A, B	R	P	NO SOURCE
RBR57#123R0%&	123.0	3/4	L, U	T, Q, A, B	R	P	NO SOURCE
RBR57#124R0%&	124.0	3/4	L, U	T, Q, A, B	R	P	NO SOURCE
RBR57#126R0%&	126.0	3/4	L, U	T, Q, A, B	R	P	NO SOURCE
RBR57#127R0%&	127.0	3/4	L, U	T, Q, A, B	R	P	NO SOURCE
RBR57#129R0%&	129.0	3/4	L, U	T, Q, A, B	R	P	NO SOURCE
RBR57#130R0%&	130.0	3/4	L, U	T, Q, A, B	R	P	NO SOURCE
RBR57#132R0%&	132.0	3/4	L, U	T, Q, A, B	R	P	NO SOURCE
RBR57#133R0%&	133.0	3/4	L, U	T, Q, A, B	R	P	NO SOURCE
RBR57#135R0%&	135.0	3/4	L, U	T, Q, A, B	R	P	NO SOURCE
RBR57#137R0%&	137.0	3/4	L, U	T, Q, A, B	R	P	NO SOURCE
RBR57#138R0%&	138.0	3/4	L, U	T, Q, A, B	R	P	NO SOURCE
	Resistance	Power	Terminal	Resistance	Level 1	Level 2	
Part Number	Value (Ohms)	Rating (W)	Characteristic (#)	Tolerance (%)	(FRL)(&)	(FRL)(&)	Manufacturer
RBR57#140R0%&	140.0	3/4	L, U	T, Q, A, B	R	P	NO SOURCE
RBR57#142R0%&	142.0	3/4	L, U	T, Q, A, B	R	P	NO SOURCE
RBR57#143R0%&	143.0	3/4	L, U	T, Q, A, B	R	P	NO SOURCE
RBR57#145R0%&	145.0	3/4	L, U	T, Q, A, B	R	P	NO SOURCE
RBR57#147R0%&	147.0	3/4	L, U	T, Q, A, B	R	P	NO SOURCE
RBR57#149R0%&	149.0	3/4	L, U	T, Q, A, B	R	P	NO SOURCE
RBR57#150R0%&	150.0	3/4	L, U	T, Q, A, B	R	P	NO SOURCE
RBR57#152R0%&	152.0	3/4	L, U	T, Q, A, B	R	P	NO SOURCE
RBR57#154R0%&	154.0	3/4	L, U	T, Q, A, B	R	P	NO SOURCE
RBR57#156R0%&	156.0	3/4	L, U	T, Q, A, B	R	P	NO SOURCE
RBR57#158R0%&	158.0	3/4	L, U	T, Q, A, B	R	P	NO SOURCE
RBR57#160R0%&	160.0	3/4	L, U	T, Q, A, B	R	P	NO SOURCE
RBR57#162R0%&	162.0	3/4	L, U	T, Q, A, B	R	P	NO SOURCE
RBR57#164R0%&	164.0	3/4	L, U	T, Q, A, B	R	P	NO SOURCE
	Resistance	Power	Terminal	Resistance	Level 1	Level 2	
Part Number	Value (Ohms)	Rating (W)	Characteristic (#)	Tolerance (%)	(FRL)(&)	(FRL)(&)	Manufacturer
RBR57#165R0%&	165.0	3/4	L, U	T, Q, A, B	R	P	NO SOURCE
RBR57#167R0%&	167.0	3/4	L, U	T, Q, A, B	R	P	NO SOURCE
RBR57#169R0%&	169.0	3/4	L, U	T, Q, A, B	R	P	NO SOURCE
RBR57#172R0%&	172.0	3/4	L, U	T, Q, A, B	R	P	NO SOURCE
RBR57#174R0%&	174.0	3/4	L, U	T, Q, A, B	R	P	NO SOURCE
RBR57#176R0%&	176.0	3/4	L, U	T, Q, A, B	R	P	NO SOURCE
RBR57#178R0%&	178.0	3/4	L, U	T, Q, A, B	R	P	NO SOURCE
RBR57#180R0%&	180.0	3/4	L, U	T, Q, A, B	R	P	NO SOURCE
RBR57#182R0%&	182.0	3/4	L, U	T, Q, A, B	R	P	NO SOURCE
RBR57#184R0%&	184.0	3/4	L, U	T, Q, A, B	R	P	NO SOURCE
RBR57#187R0%&	187.0	3/4	L, U	T, Q, A, B	R	P	NO SOURCE
RBR57#189R0%&	189.0	3/4	L, U	T, Q, A, B	R	P	NO SOURCE
RBR57#191R0%&	191.0	3/4	L, U	T, Q, A, B	R	P	NO SOURCE
RBR57#193R0%&	193.0	3/4	L, U	T, Q, A, B	R	P	NO SOURCE
	Resistance	Power	Terminal	Resistance	Level 1	Level 2	
Part Number	Value (Ohms)	Rating (W)	Characteristic (#)	Tolerance (%)	(FRL)(&)	(FRL)(&)	Manufacturer
RBR57#196R0%&	196.0	3/4	L, U	T, Q, A, B	R	P	NO SOURCE

RBR57#198R0%&	198.0	3/4	L, U	T, Q, A, B	R	P	NO SOURCE
RBR57#200R0%&	200.0	3/4	L, U	T, Q, A, B	R	P	NO SOURCE
RBR57#203R0%&	203.0	3/4	L, U	T, Q, A, B	R	P	NO SOURCE
RBR57#205R0%&	205.0	3/4	L, U	T, Q, A, B	R	P	NO SOURCE
RBR57#208R0%&	208.0	3/4	L, U	T, Q, A, B	R	P	NO SOURCE
RBR57#210R0%&	210.0	3/4	L, U	T, Q, A, B	R	P	NO SOURCE
RBR57#213R0%&	213.0	3/4	L, U	T, Q, A, B	R	P	NO SOURCE
RBR57#215R0%&	215.0	3/4	L, U	T, Q, A, B	R	P	NO SOURCE
RBR57#218R0%&	218.0	3/4	L, U	T, Q, A, B	R	P	NO SOURCE
RBR57#221R0%&	221.0	3/4	L, U	T, Q, A, B	R	P	NO SOURCE
RBR57#223R0%&	223.0	3/4	L, U	T, Q, A, B	R	P	NO SOURCE
RBR57#226R0%&	226.0	3/4	L, U	T, Q, A, B	R	P	NO SOURCE
RBR57#229R0%&	229.0	3/4	L, U	T, Q, A, B	R	P	NO SOURCE
	Resistance	Power	Terminal	Resistance	Level 1	Level 2	
Part Number	Value (Ohms)	Rating (W)	Characteristic (#)	Tolerance (%)	(FRL)(&)	(FRL)(&)	Manufacturer
RBR57#232R0%&	232.0	3/4	L, U	T, Q, A, B	R	P	NO SOURCE
RBR57#234R0%&	234.0	3/4	L, U	T, Q, A, B	R	P	NO SOURCE
RBR57#237R0%&	237.0	3/4	L, U	T, Q, A, B	R	P	NO SOURCE
RBR57#240R0%&	240.0	3/4	L, U	T, Q, A, B	R	P	NO SOURCE
RBR57#243R0%&	243.0	3/4	L, U	T, Q, A, B	R	P	NO SOURCE
RBR57#246R0%&	246.0	3/4	L, U	T, Q, A, B	R	P	NO SOURCE
RBR57#249R0%&	249.0	3/4	L, U	T, Q, A, B	R	P	NO SOURCE
RBR57#252R0%&	252.0	3/4	L, U	T, Q, A, B	R	P	NO SOURCE
RBR57#255R0%&	255.0	3/4	L, U	T, Q, A, B	R	P	NO SOURCE
RBR57#258R0%&	258.0	3/4	L, U	T, Q, A, B	R	P	NO SOURCE
RBR57#261R0%&	261.0	3/4	L, U	T, Q, A, B	R	P	NO SOURCE
RBR57#264R0%&	264.0	3/4	L, U	T, Q, A, B	R	P	NO SOURCE
RBR57#267R0%&	267.0	3/4	L, U	T, Q, A, B	R	P	NO SOURCE
RBR57#271R0%&	271.0	3/4	L, U	T, Q, A, B	R	P	NO SOURCE
	Resistance	Power	Terminal	Resistance	Level 1	Level 2	
Part Number	Value (Ohms)	Rating (W)	Characteristic (#)	Tolerance (%)	(FRL)(&)	(FRL)(&)	Manufacturer
RBR57#274R0%&	274.0	3/4	L, U	T, Q, A, B	R	P	NO SOURCE
RBR57#277R0%&	277.0	3/4	L, U	T, Q, A, B	R	P	NO SOURCE
RBR57#280R0%&	280.0	3/4	L, U	T, Q, A, B	R	P	NO SOURCE
RBR57#284R0%&	284.0	3/4	L, U	T, Q, A, B	R	P	NO SOURCE
RBR57#287R0%&	287.0	3/4	L, U	T, Q, A, B	R	P	NO SOURCE
RBR57#291R0%&	291.0	3/4	L, U	T, Q, A, B	R	P	NO SOURCE
RBR57#294R0%&	294.0	3/4	L, U	T, Q, A, B	R	P	NO SOURCE
RBR57#298R0%&	298.0	3/4	L, U	T, Q, A, B	R	P	NO SOURCE
RBR57#301R0%&	301.0	3/4	L, U	T, Q, A, B	R	P	NO SOURCE
RBR57#305R0%&	305.0	3/4	L, U	T, Q, A, B	R	P	NO SOURCE
RBR57#309R0%&	309.0	3/4	L, U	T, Q, A, B	R	P	NO SOURCE
RBR57#312R0%&	312.0	3/4	L, U	T, Q, A, B	R	P	NO SOURCE
	Resistance	Power	Terminal	Resistance	Level 1	Level 2	
Part Number	Value (Ohms)	Rating (W)	Characteristic (#)	Tolerance (%)	(FRL)(&)	(FRL)(&)	Manufacturer
RBR57#316R0%&	316.0	3/4	L, U	T, Q, A, B	R	P	NO SOURCE
RBR57#320R0%&	320.0	3/4	L, U	T, Q, A, B	R	P	NO SOURCE

RBR57#324R0%&	324.0	3/4	L, U	T, Q, A, B	R	P	NO SOURCE
RBR57#328R0%&	328.0	3/4	L, U	T, Q, A, B	R	P	NO SOURCE
RBR57#332R0%&	332.0	3/4	L, U	T, Q, A, B	R	P	NO SOURCE
RBR57#336R0%&	336.0	3/4	L, U	T, Q, A, B	R	P	NO SOURCE
RBR57#340R0%&	340.0	3/4	L, U	T, Q, A, B	R	P	NO SOURCE
RBR57#344R0%&	344.0	3/4	L, U	T, Q, A, B	R	P	NO SOURCE
RBR57#348R0%&	348.0	3/4	L, U	T, Q, A, B	R	P	NO SOURCE
RBR57#352R0%&	352.0	3/4	L, U	T, Q, A, B	R	P	NO SOURCE
RBR57#357R0%&	357.0	3/4	L, U	T, Q, A, B	R	P	NO SOURCE
RBR57#361R0%&	361.0	3/4	L, U	T, Q, A, B	R	P	NO SOURCE
RBR57#365R0%&	365.0	3/4	L, U	T, Q, A, B	R	P	NO SOURCE
RBR57#370R0%&	370.0	3/4	L, U	T, Q, A, B	R	P	NO SOURCE
	Resistance	Power	Terminal	Resistance	Level 1	Level 2	
Part Number	Value (Ohms)	Rating (W)	Characteristic (#)	Tolerance (%)	(FRL)(&)	(FRL)(&)	Manufacturer
RBR57#374R0%&	374.0	3/4	L, U	T, Q, A, B	R	P	NO SOURCE
RBR57#379R0%&	379.0	3/4	L, U	T, Q, A, B	R	P	NO SOURCE
RBR57#383R0%&	383.0	3/4	L, U	T, Q, A, B	R	P	NO SOURCE
RBR57#388R0%&	388.0	3/4	L, U	T, Q, A, B	R	P	NO SOURCE
RBR57#392R0%&	392.0	3/4	L, U	T, Q, A, B	R	P	NO SOURCE
RBR57#397R0%&	397.0	3/4	L, U	T, Q, A, B	R	P	NO SOURCE
RBR57#402R0%&	402.0	3/4	L, U	T, Q, A, B	R	P	NO SOURCE
RBR57#407R0%&	407.0	3/4	L, U	T, Q, A, B	R	P	NO SOURCE
RBR57#412R0%&	412.0	3/4	L, U	T, Q, A, B	R	P	NO SOURCE
RBR57#417R0%&	417.0	3/4	L, U	T, Q, A, B	R	P	NO SOURCE
RBR57#422R0%&	422.0	3/4	L, U	T, Q, A, B	R	P	NO SOURCE
RBR57#427R0%&	427.0	3/4	L, U	T, Q, A, B	R	P	NO SOURCE
RBR57#432R0%&	432.0	3/4	L, U	T, Q, A, B	R	P	NO SOURCE
RBR57#437R0%&	437.0	3/4	L, U	T, Q, A, B	R	P	NO SOURCE
	Resistance	Power	Terminal	Resistance	Level 1	Level 2	
Part Number	Value (Ohms)	Rating (W)	Characteristic (#)	Tolerance (%)	(FRL)(&)	(FRL)(&)	Manufacturer
RBR57#442R0%&	442.0	3/4	L, U	T, Q, A, B	R	P	NO SOURCE
RBR57#448R0%&	448.0	3/4	L, U	T, Q, A, B	R	P	NO SOURCE
RBR57#453R0%&	453.0	3/4	L, U	T, Q, A, B	R	P	NO SOURCE
RBR57#459R0%&	459.0	3/4	L, U	T, Q, A, B	R	P	NO SOURCE
RBR57#464R0%&	464.0	3/4	L, U	T, Q, A, B	R	P	NO SOURCE
RBR57#470R0%&	470.0	3/4	L, U	T, Q, A, B	R	P	NO SOURCE
RBR57#475R0%&	475.0	3/4	L, U	T, Q, A, B	R	P	NO SOURCE
RBR57#481R0%&	481.0	3/4	L, U	T, Q, A, B	R	P	NO SOURCE
RBR57#487R0%&	487.0	3/4	L, U	T, Q, A, B	R	P	NO SOURCE
RBR57#493R0%&	493.0	3/4	L, U	T, Q, A, B	R	P	NO SOURCE
RBR57#499R0%&	499.0	3/4	L, U	T, Q, A, B	R	P	NO SOURCE
RBR57#505R0%&	505.0	3/4	L, U	T, Q, A, B	R	P	NO SOURCE
RBR57#511R0%&	511.0	3/4	L, U	T, Q, A, B	R	P	NO SOURCE
RBR57#517R0%&	517.0	3/4	L, U	T, Q, A, B	R	P	NO SOURCE
	Resistance	Power	Terminal	Resistance	Level 1	Level 2	
Part Number	Value (Ohms)	Rating (W)	Characteristic (#)	Tolerance (%)	(FRL)(&)	(FRL)(&)	Manufacturer
RBR57#523R0%&	523.0	3/4	L, U	T, Q, A, B	R	P	NO SOURCE

RBR57#530R0%&	530.0	3/4	L, U	T, Q, A, B	R	P	NO SOURCE
RBR57#536R0%&	536.0	3/4	L, U	T, Q, A, B	R	P	NO SOURCE
RBR57#542R0%&	542.0	3/4	L, U	T, Q, A, B	R	P	NO SOURCE
RBR57#549R0%&	549.0	3/4	L, U	T, Q, A, B	R	P	NO SOURCE
RBR57#556R0%&	556.0	3/4	L, U	T, Q, A, B	R	P	NO SOURCE
RBR57#562R0%&	562.0	3/4	L, U	T, Q, A, B	R	P	NO SOURCE
RBR57#569R0%&	569.0	3/4	L, U	T, Q, A, B	R	P	NO SOURCE
RBR57#576R0%&	576.0	3/4	L, U	T, Q, A, B	R	P	NO SOURCE
RBR57#583R0%&	583.0	3/4	L, U	T, Q, A, B	R	P	NO SOURCE
RBR57#590R0%&	590.0	3/4	L, U	T, Q, A, B	R	P	NO SOURCE
RBR57#597R0%&	597.0	3/4	L, U	T, Q, A, B	R	P	NO SOURCE
RBR57#604R0%&	604.0	3/4	L, U	T, Q, A, B	R	P	NO SOURCE
RBR57#612R0%&	612.0	3/4	L, U	T, Q, A, B	R	P	NO SOURCE
	Resistance	Power	Terminal	Resistance	Level 1	Level 2	
Part Number	Value (Ohms)	Rating (W)	Characteristic (#)	Tolerance (%)	(FRL)(&)	(FRL)(&)	Manufacturer
RBR57#619R0%&	619.0	3/4	L, U	T, Q, A, B	R	P	NO SOURCE
RBR57#626R0%&	626.0	3/4	L, U	T, Q, A, B	R	P	NO SOURCE
RBR57#634R0%&	634.0	3/4	L, U	T, Q, A, B	R	P	NO SOURCE
RBR57#642R0%&	642.0	3/4	L, U	T, Q, A, B	R	P	NO SOURCE
RBR57#649R0%&	649.0	3/4	L, U	T, Q, A, B	R	P	NO SOURCE
RBR57#657R0%&	657.0	3/4	L, U	T, Q, A, B	R	P	NO SOURCE
RBR57#665R0%&	665.0	3/4	L, U	T, Q, A, B	R	P	NO SOURCE
RBR57#673R0%&	673.0	3/4	L, U	T, Q, A, B	R	P	NO SOURCE
RBR57#681R0%&	681.0	3/4	L, U	T, Q, A, B	R	P	NO SOURCE
RBR57#690R0%&	690.0	3/4	L, U	T, Q, A, B	R	P	NO SOURCE
RBR57#698R0%&	698.0	3/4	L, U	T, Q, A, B	R	P	NO SOURCE
RBR57#706R0%&	706.0	3/4	L, U	T, Q, A, B	R	P	NO SOURCE
	Resistance	Power	Terminal	Resistance	Level 1	Level 2	
Part Number	Value (Ohms)	Rating (W)	Characteristic (#)	Tolerance (%)	(FRL)(&)	(FRL)(&)	Manufacturer
RBR57#715R0%&	715.0	3/4	L, U	T, Q, A, B	R	P	NO SOURCE
RBR57#723R0%&	723.0	3/4	L, U	T, Q, A, B	R	P	NO SOURCE
RBR57#732R0%&	732.0	3/4	L, U	T, Q, A, B	R	P	NO SOURCE
RBR57#741R0%&	741.0	3/4	L, U	T, Q, A, B	R	P	NO SOURCE
RBR57#750R0%&	750.0	3/4	L, U	T, Q, A, B	R	P	NO SOURCE
RBR57#759R0%&	759.0	3/4	L, U	T, Q, A, B	R	P	NO SOURCE
RBR57#768R0%&	768.0	3/4	L, U	T, Q, A, B	R	P	NO SOURCE
RBR57#777R0%&	777.0	3/4	L, U	T, Q, A, B	R	P	NO SOURCE
RBR57#787R0%&	787.0	3/4	L, U	T, Q, A, B	R	P	NO SOURCE
RBR57#796R0%&	796.0	3/4	L, U	T, Q, A, B	R	P	NO SOURCE
RBR57#806R0%&	806.0	3/4	L, U	T, Q, A, B	R	P	NO SOURCE
RBR57#816R0%&	816.0	3/4	L, U	T, Q, A, B	R	P	NO SOURCE
RBR57#825R0%&	825.0	3/4	L, U	T, Q, A, B	R	P	NO SOURCE
RBR57#835R0%&	835.0	3/4	L, U	T, Q, A, B	R	P	NO SOURCE
	Resistance	Power	Terminal	Resistance	Level 1	Level 2	
Part Number	Value (Ohms)	Rating (W)	Characteristic (#)	Tolerance (%)	(FRL)(&)	(FRL)(&)	Manufacturer
RBR57#845R0%&	845.0	3/4	L, U	T, Q, A, B	R	P	NO SOURCE
RBR57#856R0%&	856.0	3/4	L, U	T, Q, A, B	R	P	NO SOURCE

RBR57#866R0%&	866.0	3/4	L, U	T, Q, A, B	R	P	NO SOURCE
RBR57#876R0%&	876.0	3/4	L, U	T, Q, A, B	R	P	NO SOURCE
RBR57#887R0%&	887.0	3/4	L, U	T, Q, A, B	R	P	NO SOURCE
RBR57#898R0%&	898.0	3/4	L, U	T, Q, A, B	R	P	NO SOURCE
RBR57#909R0%&	909.0	3/4	L, U	T, Q, A, B	R	P	NO SOURCE
RBR57#920R0%&	920.0	3/4	L, U	T, Q, A, B	R	P	NO SOURCE
RBR57#931R0%&	931.0	3/4	L, U	T, Q, A, B	R	P	NO SOURCE
RBR57#942R0%&	942.0	3/4	L, U	T, Q, A, B	R	P	NO SOURCE
RBR57#953R0%&	953.0	3/4	L, U	T, Q, A, B	R	P	NO SOURCE
RBR57#965R0%&	965.0	3/4	L, U	T, Q, A, B	R	P	NO SOURCE
RBR57#976R0%&	976.0	3/4	L, U	T, Q, A, B	R	P	NO SOURCE
RBR57#988R0%&	988.0	3/4	L, U	T, Q, A, B	R	P	NO SOURCE
	Resistance	Power	Terminal	Resistance	Level 1	Level 2	
Part Number	Value (Ohms)	Rating (W)	Characteristic (#)	Tolerance (%)	(FRL)(&)	(FRL)(&)	Manufacturer

RBR57 Wirewound Resistors: 1,000 Ohms through 9,880 Ohms

	Resistance	Power	Terminal	Resistance	Level 1	Level 2	
Part Number	Value (Ohms)	Rating (W)	Characteristic (#)	Tolerance (%)	(FRL)(&)	(FRL)(&)	Manufacturer
RBR57#10000%&	1,000	3/4	L, U	T, Q, A, B	R	P	NO SOURCE
RBR57#10100%&	1,010	3/4	L, U	T, Q, A, B	R	P	NO SOURCE
RBR57#10200%&	1,020	3/4	L, U	T, Q, A, B	R	P	NO SOURCE
RBR57#10400%&	1,040	3/4	L, U	T, Q, A, B	R	P	NO SOURCE
RBR57#10500%&	1,050	3/4	L, U	T, Q, A, B	R	P	NO SOURCE
RBR57#10600%&	1,060	3/4	L, U	T, Q, A, B	R	P	NO SOURCE
RBR57#10700%&	1,070	3/4	L, U	T, Q, A, B	R	P	NO SOURCE
RBR57#10900%&	1,090	3/4	L, U	T, Q, A, B	R	P	NO SOURCE
RBR57#11000%&	1,100	3/4	L, U	T, Q, A, B	R	P	NO SOURCE
RBR57#11100%&	1,110	3/4	L, U	T, Q, A, B	R	P	NO SOURCE
RBR57#11300%&	1,130	3/4	L, U	T, Q, A, B	R	P	NO SOURCE
RBR57#11400%&	1,140	3/4	L, U	T, Q, A, B	R	P	NO SOURCE
RBR57#11500%&	1,150	3/4	L, U	T, Q, A, B	R	P	NO SOURCE
RBR57#11700%&	1,170	3/4	L, U	T, Q, A, B	R	P	NO SOURCE
	Resistance	Power	Terminal	Resistance	Level 1	Level 2	
Part Number	Value (Ohms)	Rating (W)	Characteristic (#)	Tolerance (%)	(FRL)(&)	(FRL)(&)	Manufacturer
RBR57#11800%&	1,180	3/4	L, U	T, Q, A, B	R	P	NO SOURCE
RBR57#12000%&	1,200	3/4	L, U	T, Q, A, B	R	P	NO SOURCE
RBR57#12100%&	1,210	3/4	L, U	T, Q, A, B	R	P	NO SOURCE
RBR57#12300%&	1,230	3/4	L, U	T, Q, A, B	R	P	NO SOURCE
RBR57#12400%&	1,240	3/4	L, U	T, Q, A, B	R	P	NO SOURCE
RBR57#12600%&	1,260	3/4	L, U	T, Q, A, B	R	P	NO SOURCE
RBR57#12700%&	1,270	3/4	L, U	T, Q, A, B	R	P	NO SOURCE
RBR57#12900%&	1,290	3/4	L, U	T, Q, A, B	R	P	NO SOURCE
RBR57#13000%&	1,300	3/4	L, U	T, Q, A, B	R	P	NO SOURCE
RBR57#13200%&	1,320	3/4	L, U	T, Q, A, B	R	P	NO SOURCE

RBR57#13300%&	1,330	3/4	L, U	T, Q, A, B	R	P	NO SOURCE
RBR57#13500%&	1,350	3/4	L, U	T, Q, A, B	R	P	NO SOURCE
RBR57#13700%&	1,370	3/4	L, U	T, Q, A, B	R	P	NO SOURCE
RBR57#13800%&	1,380	3/4	L, U	T, Q, A, B	R	P	NO SOURCE
	Resistance	Power	Terminal	Resistance	Level 1	Level 2	
Part Number	Value (Ohms)	Rating (W)	Characteristic (#)	Tolerance (%)	(FRL)(&)	(FRL)(&)	Manufacturer
RBR57#14000%&	1,400	3/4	L, U	T, Q, A, B	R	P	NO SOURCE
RBR57#14200%&	1,420	3/4	L, U	T, Q, A, B	R	P	NO SOURCE
RBR57#14300%&	1,430	3/4	L, U	T, Q, A, B	R	P	NO SOURCE
RBR57#14500%&	1,450	3/4	L, U	T, Q, A, B	R	P	NO SOURCE
RBR57#14700%&	1,470	3/4	L, U	T, Q, A, B	R	P	NO SOURCE
RBR57#14900%&	1,490	3/4	L, U	T, Q, A, B	R	P	NO SOURCE
RBR57#15000%&	1,500	3/4	L, U	T, Q, A, B	R	P	NO SOURCE
RBR57#15200%&	1,520	3/4	L, U	T, Q, A, B	R	P	NO SOURCE
RBR57#15400%&	1,540	3/4	L, U	T, Q, A, B	R	P	NO SOURCE
RBR57#15600%&	1,560	3/4	L, U	T, Q, A, B	R	P	NO SOURCE
RBR57#15800%&	1,580	3/4	L, U	T, Q, A, B	R	P	NO SOURCE
RBR57#16000%&	1,600	3/4	L, U	T, Q, A, B	R	P	NO SOURCE
RBR57#16200%&	1,620	3/4	L, U	T, Q, A, B	R	P	NO SOURCE
RBR57#16400%&	1,640	3/4	L, U	T, Q, A, B	R	P	NO SOURCE
	Resistance	Power	Terminal	Resistance	Level 1	Level 2	
Part Number	Value (Ohms)	Rating (W)	Characteristic (#)	Tolerance (%)	(FRL)(&)	(FRL)(&)	Manufacturer
RBR57#16500%&	1,650	3/4	L, U	T, Q, A, B	R	P	NO SOURCE
RBR57#16700%&	1,670	3/4	L, U	T, Q, A, B	R	P	NO SOURCE
RBR57#16900%&	1,690	3/4	L, U	T, Q, A, B	R	P	NO SOURCE
RBR57#17200%&	1,720	3/4	L, U	T, Q, A, B	R	P	NO SOURCE
RBR57#17400%&	1,740	3/4	L, U	T, Q, A, B	R	P	NO SOURCE
RBR57#17600%&	1,760	3/4	L, U	T, Q, A, B	R	P	NO SOURCE
RBR57#17800%&	1,780	3/4	L, U	T, Q, A, B	R	P	NO SOURCE
RBR57#18000%&	1,800	3/4	L, U	T, Q, A, B	R	P	NO SOURCE
RBR57#18200%&	1,820	3/4	L, U	T, Q, A, B	R	P	NO SOURCE
RBR57#18400%&	1,840	3/4	L, U	T, Q, A, B	R	P	NO SOURCE
RBR57#18700%&	1,870	3/4	L, U	T, Q, A, B	R	P	NO SOURCE
RBR57#18900%&	1,890	3/4	L, U	T, Q, A, B	R	P	NO SOURCE
RBR57#19100%&	1,910	3/4	L, U	T, Q, A, B	R	P	NO SOURCE
RBR57#19300%&	1,930	3/4	L, U	T, Q, A, B	R	P	NO SOURCE
	Resistance	Power	Terminal	Resistance	Level 1	Level 2	
Part Number	Value (Ohms)	Rating (W)	Characteristic (#)	Tolerance (%)	(FRL)(&)	(FRL)(&)	Manufacturer
RBR57#19600%&	1,960	3/4	L, U	T, Q, A, B	R	P	NO SOURCE
RBR57#19800%&	1,980	3/4	L, U	T, Q, A, B	R	P	NO SOURCE
RBR57#20000%&	2,000	3/4	L, U	T, Q, A, B	R	P	NO SOURCE
RBR57#20300%&	2,030	3/4	L, U	T, Q, A, B	R	P	NO SOURCE
RBR57#20500%&	2,050	3/4	L, U	T, Q, A, B	R	P	NO SOURCE
RBR57#20800%&	2,080	3/4	L, U	T, Q, A, B	R	P	NO SOURCE
RBR57#21000%&	2,100	3/4	L, U	T, Q, A, B	R	P	NO SOURCE
RBR57#21300%&	2,130	3/4	L, U	T, Q, A, B	R	P	NO SOURCE
RBR57#21500%&	2,150	3/4	L, U	T, Q, A, B	R	P	NO SOURCE

RBR57#21800%&	2,180	3/4	L, U	T, Q, A, B	R	P	NO SOURCE
RBR57#22100%&	2,210	3/4	L, U	T, Q, A, B	R	P	NO SOURCE
RBR57#22300%&	2,230	3/4	L, U	T, Q, A, B	R	P	NO SOURCE
RBR57#22600%&	2,260	3/4	L, U	T, Q, A, B	R	P	NO SOURCE
RBR57#22900%&	2,290	3/4	L, U	T, Q, A, B	R	P	NO SOURCE
	Resistance	Power	Terminal	Resistance	Level 1	Level 2	
Part Number	Value (Ohms)	Rating (W)	Characteristic (#)	Tolerance (%)	(FRL)(&)	(FRL)(&)	Manufacturer
RBR57#23200%&	2,320	3/4	L, U	T, Q, A, B	R	P	NO SOURCE
RBR57#23400%&	2,340	3/4	L, U	T, Q, A, B	R	P	NO SOURCE
RBR57#23700%&	2,370	3/4	L, U	T, Q, A, B	R	P	NO SOURCE
RBR57#24000%&	2,400	3/4	L, U	T, Q, A, B	R	P	NO SOURCE
RBR57#24300%&	2,430	3/4	L, U	T, Q, A, B	R	P	NO SOURCE
RBR57#24600%&	2,460	3/4	L, U	T, Q, A, B	R	P	NO SOURCE
RBR57#24900%&	2,490	3/4	L, U	T, Q, A, B	R	P	NO SOURCE
RBR57#25200%&	2,520	3/4	L, U	T, Q, A, B	R	P	NO SOURCE
RBR57#25500%&	2,550	3/4	L, U	T, Q, A, B	R	P	NO SOURCE
RBR57#25800%&	2,580	3/4	L, U	T, Q, A, B	R	P	NO SOURCE
RBR57#26100%&	2,610	3/4	L, U	T, Q, A, B	R	P	NO SOURCE
RBR57#26400%&	2,640	3/4	L, U	T, Q, A, B	R	P	NO SOURCE
RBR57#26700%&	2,670	3/4	L, U	T, Q, A, B	R	P	NO SOURCE
RBR57#27100%&	2,710	3/4	L, U	T, Q, A, B	R	P	NO SOURCE
	Resistance	Power	Terminal	Resistance	Level 1	Level 2	
Part Number	Value (Ohms)	Rating (W)	Characteristic (#)	Tolerance (%)	(FRL)(&)	(FRL)(&)	Manufacturer
RBR57#27400%&	2,740	3/4	L, U	T, Q, A, B	R	P	NO SOURCE
RBR57#27700%&	2,770	3/4	L, U	T, Q, A, B	R	P	NO SOURCE
RBR57#28000%&	2,800	3/4	L, U	T, Q, A, B	R	P	NO SOURCE
RBR57#28400%&	2,840	3/4	L, U	T, Q, A, B	R	P	NO SOURCE
RBR57#28700%&	2,870	3/4	L, U	T, Q, A, B	R	P	NO SOURCE
RBR57#29100%&	2,910	3/4	L, U	T, Q, A, B	R	P	NO SOURCE
RBR57#29400%&	2,940	3/4	L, U	T, Q, A, B	R	P	NO SOURCE
RBR57#29800%&	2,980	3/4	L, U	T, Q, A, B	R	P	NO SOURCE
RBR57#30100%&	3,010	3/4	L, U	T, Q, A, B	R	P	NO SOURCE
RBR57#30500%&	3,050	3/4	L, U	T, Q, A, B	R	P	NO SOURCE
RBR57#30900%&	3,090	3/4	L, U	T, Q, A, B	R	P	NO SOURCE
RBR57#31200%&	3,120	3/4	L, U	T, Q, A, B	R	P	NO SOURCE
	Resistance	Power	Terminal	Resistance	Level 1	Level 2	
Part Number	Value (Ohms)	Rating (W)	Characteristic (#)	Tolerance (%)	(FRL)(&)	(FRL)(&)	Manufacturer
RBR57#31600%&	3,160	3/4	L, U	T, Q, A, B	R	P	NO SOURCE
RBR57#32000%&	3,200	3/4	L, U	T, Q, A, B	R	P	NO SOURCE
RBR57#32400%&	3,240	3/4	L, U	T, Q, A, B	R	P	NO SOURCE
RBR57#32800%&	3,280	3/4	L, U	T, Q, A, B	R	P	NO SOURCE
RBR57#33200%&	3,320	3/4	L, U	T, Q, A, B	R	P	NO SOURCE
RBR57#33600%&	3,360	3/4	L, U	T, Q, A, B	R	P	NO SOURCE
RBR57#34000%&	3,400	3/4	L, U	T, Q, A, B	R	P	NO SOURCE
RBR57#34400%&	3,440	3/4	L, U	T, Q, A, B	R	P	NO SOURCE
RBR57#34800%&	3,480	3/4	L, U	T, Q, A, B	R	P	NO SOURCE
RBR57#35200%&	3,520	3/4	L, U	T, Q, A, B	R	P	NO SOURCE

RBR57#35700%&	3,570	3/4	L, U	T, Q, A, B	R	P	NO SOURCE
RBR57#36100%&	3,610	3/4	L, U	T, Q, A, B	R	P	NO SOURCE
RBR57#36500%&	3,650	3/4	L, U	T, Q, A, B	R	P	NO SOURCE
RBR57#37000%&	3,700	3/4	L, U	T, Q, A, B	R	P	NO SOURCE
	Resistance	Power	Terminal	Resistance	Level 1	Level 2	
Part Number	Value (Ohms)	Rating (W)	Characteristic (#)	Tolerance (%)	(FRL)(&)	(FRL)(&)	Manufacturer
RBR57#37400%&	3,740	3/4	L, U	T, Q, A, B	R	P	NO SOURCE
RBR57#37900%&	3,790	3/4	L, U	T, Q, A, B	R	P	NO SOURCE
RBR57#38300%&	3,830	3/4	L, U	T, Q, A, B	R	P	NO SOURCE
RBR57#38800%&	3,880	3/4	L, U	T, Q, A, B	R	P	NO SOURCE
RBR57#39200%&	3,920	3/4	L, U	T, Q, A, B	R	P	NO SOURCE
RBR57#39700%&	3,970	3/4	L, U	T, Q, A, B	R	P	NO SOURCE
RBR57#40200%&	4,020	3/4	L, U	T, Q, A, B	R	P	NO SOURCE
RBR57#40700%&	4,070	3/4	L, U	T, Q, A, B	R	P	NO SOURCE
RBR57#41200%&	4,120	3/4	L, U	T, Q, A, B	R	P	NO SOURCE
RBR57#41700%&	4,170	3/4	L, U	T, Q, A, B	R	P	NO SOURCE
RBR57#42200%&	4,220	3/4	L, U	T, Q, A, B	R	P	NO SOURCE
RBR57#42700%&	4,270	3/4	L, U	T, Q, A, B	R	P	NO SOURCE
RBR57#43200%&	4,320	3/4	L, U	T, Q, A, B	R	P	NO SOURCE
RBR57#43700%&	4,370	3/4	L, U	T, Q, A, B	R	P	NO SOURCE
	Resistance	Power	Terminal	Resistance	Level 1	Level 2	
Part Number	Value (Ohms)	Rating (W)	Characteristic (#)	Tolerance (%)	(FRL)(&)	(FRL)(&)	Manufacturer
RBR57#44200%&	4,420	3/4	L, U	T, Q, A, B	R	P	NO SOURCE
RBR57#44800%&	4,480	3/4	L, U	T, Q, A, B	R	P	NO SOURCE
RBR57#45300%&	4,530	3/4	L, U	T, Q, A, B	R	P	NO SOURCE
RBR57#45900%&	4,590	3/4	L, U	T, Q, A, B	R	P	NO SOURCE
RBR57#46400%&	4,640	3/4	L, U	T, Q, A, B	R	P	NO SOURCE
RBR57#47000%&	4,700	3/4	L, U	T, Q, A, B	R	P	NO SOURCE
RBR57#47500%&	4,750	3/4	L, U	T, Q, A, B	R	P	NO SOURCE
RBR57#48100%&	4,810	3/4	L, U	T, Q, A, B	R	P	NO SOURCE
RBR57#48700%&	4,870	3/4	L, U	T, Q, A, B	R	P	NO SOURCE
RBR57#49300%&	4,930	3/4	L, U	T, Q, A, B	R	P	NO SOURCE
RBR57#49900%&	4,990	3/4	L, U	T, Q, A, B	R	P	NO SOURCE
RBR57#50500%&	5,050	3/4	L, U	T, Q, A, B	R	P	NO SOURCE
RBR57#51100%&	5,110	3/4	L, U	T, Q, A, B	R	P	NO SOURCE
RBR57#51700%&	5,170	3/4	L, U	T, Q, A, B	R	P	NO SOURCE
	Resistance	Power	Terminal	Resistance	Level 1	Level 2	
Part Number	Value (Ohms)	Rating (W)	Characteristic (#)	Tolerance (%)	(FRL)(&)	(FRL)(&)	Manufacturer
RBR57#52300%&	5,230	3/4	L, U	T, Q, A, B	R	P	NO SOURCE
RBR57#53000%&	5,300	3/4	L, U	T, Q, A, B	R	P	NO SOURCE
RBR57#53600%&	5,360	3/4	L, U	T, Q, A, B	R	P	NO SOURCE
RBR57#54200%&	5,420	3/4	L, U	T, Q, A, B	R	P	NO SOURCE
RBR57#54900%&	5,490	3/4	L, U	T, Q, A, B	R	P	NO SOURCE
RBR57#55600%&	5,560	3/4	L, U	T, Q, A, B	R	P	NO SOURCE
RBR57#56200%&	5,620	3/4	L, U	T, Q, A, B	R	P	NO SOURCE
RBR57#56900%&	5,690	3/4	L, U	T, Q, A, B	R	P	NO SOURCE
RBR57#57600%&	5,760	3/4	L, U	T, Q, A, B	R	P	NO SOURCE

RBR57#58300%&	5,830	3/4	L, U	T, Q, A, B	R	P	NO SOURCE
RBR57#59000%&	5,900	3/4	L, U	T, Q, A, B	R	P	NO SOURCE
RBR57#59700%&	5,970	3/4	L, U	T, Q, A, B	R	P	NO SOURCE
RBR57#60400%&	6,040	3/4	L, U	T, Q, A, B	R	P	NO SOURCE
RBR57#61200%&	6,120	3/4	L, U	T, Q, A, B	R	P	NO SOURCE
	Resistance	Power	Terminal	Resistance	Level 1	Level 2	
Part Number	Value (Ohms)	Rating (W)	Characteristic (#)	Tolerance (%)	(FRL)(&)	(FRL)(&)	Manufacturer
RBR57#61900%&	6,190	3/4	L, U	T, Q, A, B	R	P	NO SOURCE
RBR57#62600%&	6,260	3/4	L, U	T, Q, A, B	R	P	NO SOURCE
RBR57#63400%&	6,340	3/4	L, U	T, Q, A, B	R	P	NO SOURCE
RBR57#64200%&	6,420	3/4	L, U	T, Q, A, B	R	P	NO SOURCE
RBR57#64900%&	6,490	3/4	L, U	T, Q, A, B	R	P	NO SOURCE
RBR57#65700%&	6,570	3/4	L, U	T, Q, A, B	R	P	NO SOURCE
RBR57#66500%&	6,650	3/4	L, U	T, Q, A, B	R	P	NO SOURCE
RBR57#67300%&	6,730	3/4	L, U	T, Q, A, B	R	P	NO SOURCE
RBR57#68100%&	6,810	3/4	L, U	T, Q, A, B	R	P	NO SOURCE
RBR57#69000%&	6,900	3/4	L, U	T, Q, A, B	R	P	NO SOURCE
RBR57#69800%&	6,980	3/4	L, U	T, Q, A, B	R	P	NO SOURCE
RBR57#70600%&	7,060	3/4	L, U	T, Q, A, B	R	P	NO SOURCE
	Resistance	Power	Terminal	Resistance	Level 1	Level 2	
Part Number	Value (Ohms)	Rating (W)	Characteristic (#)	Tolerance (%)	(FRL)(&)	(FRL)(&)	Manufacturer
RBR57#71500%&	7,150	3/4	L, U	T, Q, A, B	R	P	NO SOURCE
RBR57#72300%&	7,230	3/4	L, U	T, Q, A, B	R	P	NO SOURCE
RBR57#73200%&	7,320	3/4	L, U	T, Q, A, B	R	P	NO SOURCE
RBR57#74100%&	7,410	3/4	L, U	T, Q, A, B	R	P	NO SOURCE
RBR57#75000%&	7,500	3/4	L, U	T, Q, A, B	R	P	NO SOURCE
RBR57#75900%&	7,590	3/4	L, U	T, Q, A, B	R	P	NO SOURCE
RBR57#76800%&	7,680	3/4	L, U	T, Q, A, B	R	P	NO SOURCE
RBR57#77700%&	7,770	3/4	L, U	T, Q, A, B	R	P	NO SOURCE
RBR57#78700%&	7,870	3/4	L, U	T, Q, A, B	R	P	NO SOURCE
RBR57#79600%&	7,960	3/4	L, U	T, Q, A, B	R	P	NO SOURCE
RBR57#80600%&	8,060	3/4	L, U	T, Q, A, B	R	P	NO SOURCE
RBR57#81600%&	8,160	3/4	L, U	T, Q, A, B	R	P	NO SOURCE
RBR57#82500%&	8,250	3/4	L, U	T, Q, A, B	R	P	NO SOURCE
RBR57#83500%&	8,350	3/4	L, U	T, Q, A, B	R	P	NO SOURCE
	Resistance	Power	Terminal	Resistance	Level 1	Level 2	
Part Number	Value (Ohms)	Rating (W)	Characteristic (#)	Tolerance (%)	(FRL)(&)	(FRL)(&)	Manufacturer
RBR57#84500%&	8,450	3/4	L, U	T, Q, A, B	R	P	NO SOURCE
RBR57#85600%&	8,560	3/4	L, U	T, Q, A, B	R	P	NO SOURCE
RBR57#86600%&	8,660	3/4	L, U	T, Q, A, B	R	P	NO SOURCE
RBR57#87600%&	8,760	3/4	L, U	T, Q, A, B	R	P	NO SOURCE
RBR57#88700%&	8,870	3/4	L, U	T, Q, A, B	R	P	NO SOURCE
RBR57#89800%&	8,980	3/4	L, U	T, Q, A, B	R	P	NO SOURCE
RBR57#90900%&	9,090	3/4	L, U	T, Q, A, B	R	P	NO SOURCE
RBR57#92000%&	9,190	3/4	L, U	T, Q, A, B	R	P	NO SOURCE
RBR57#93100%&	9,310	3/4	L, U	T, Q, A, B	R	P	NO SOURCE
RBR57#94200%&	9,420	3/4	L, U	T, Q, A, B	R	P	NO SOURCE

RBR57#95300%&	9,530	3/4	L, U	T, Q, A, B	R	P	NO SOURCE
RBR57#96500%&	9,650	3/4	L, U	T, Q, A, B	R	P	NO SOURCE
RBR57#97600%&	9,760	3/4	L, U	T, Q, A, B	R	P	NO SOURCE
RBR57#98800%&	9,880	3/4	L, U	T, Q, A, B	R	P	NO SOURCE
	Resistance	Power	Terminal	Resistance	Level 1	Level 2	
Part Number	Value (Ohms)	Rating (W)	Characteristic (#)	Tolerance (%)	(FRL)(&)	(FRL)(&)	Manufacturer

RBR57 Wirewound Resistors: 10,000 Ohms through 98,800 Ohms

	Resistance	Power	Terminal	Resistance	Level 1	Level 2	
Part Number	Value (Ohms)	Rating (W)	Characteristic (#)	Tolerance (%)	(FRL)(&)	(FRL)(&)	Manufacturer
RBR57#10001%&	10,000	3/4	L, U	T, Q, A, B	R	P	NO SOURCE
RBR57#10101%&	10,100	3/4	L, U	T, Q, A, B	R	P	NO SOURCE
RBR57#10201%&	10,200	3/4	L, U	T, Q, A, B	R	P	NO SOURCE
RBR57#10401%&	10,400	3/4	L, U	T, Q, A, B	R	P	NO SOURCE
RBR57#10501%&	10,500	3/4	L, U	T, Q, A, B	R	P	NO SOURCE
RBR57#10601%&	10,600	3/4	L, U	T, Q, A, B	R	P	NO SOURCE
RBR57#10701%&	10,700	3/4	L, U	T, Q, A, B	R	P	NO SOURCE
RBR57#10901%&	10,900	3/4	L, U	T, Q, A, B	R	P	NO SOURCE
RBR57#11001%&	11,000	3/4	L, U	T, Q, A, B	R	P	NO SOURCE
RBR57#11101%&	11,100	3/4	L, U	T, Q, A, B	R	P	NO SOURCE
RBR57#11301%&	11,300	3/4	L, U	T, Q, A, B	R	P	NO SOURCE
RBR57#11401%&	11,400	3/4	L, U	T, Q, A, B	R	P	NO SOURCE
RBR57#11501%&	11,500	3/4	L, U	T, Q, A, B	R	P	NO SOURCE
RBR57#11701%&	11,700	3/4	L, U	T, Q, A, B	R	P	NO SOURCE
	Resistance	Power	Terminal	Resistance	Level 1	Level 2	
Part Number	Value (Ohms)	Rating (W)	Characteristic (#)	Tolerance (%)	(FRL)(&)	(FRL)(&)	Manufacturer
RBR57#11801%&	11,800	3/4	L, U	T, Q, A, B	R	P	NO SOURCE
RBR57#12001%&	12,000	3/4	L, U	T, Q, A, B	R	P	NO SOURCE
RBR57#12101%&	12,100	3/4	L, U	T, Q, A, B	R	P	NO SOURCE
RBR57#12301%&	12,300	3/4	L, U	T, Q, A, B	R	P	NO SOURCE
RBR57#12401%&	12,400	3/4	L, U	T, Q, A, B	R	P	NO SOURCE
RBR57#12601%&	12,600	3/4	L, U	T, Q, A, B	R	P	NO SOURCE
RBR57#12701%&	12,700	3/4	L, U	T, Q, A, B	R	P	NO SOURCE
RBR57#12901%&	12,900	3/4	L, U	T, Q, A, B	R	P	NO SOURCE
RBR57#13001%&	13,000	3/4	L, U	T, Q, A, B	R	P	NO SOURCE
RBR57#13201%&	13,200	3/4	L, U	T, Q, A, B	R	P	NO SOURCE
RBR57#13301%&	13,300	3/4	L, U	T, Q, A, B	R	P	NO SOURCE
RBR57#13501%&	13,500	3/4	L, U	T, Q, A, B	R	P	NO SOURCE
RBR57#13701%&	13,700	3/4	L, U	T, Q, A, B	R	P	NO SOURCE
RBR57#13801%&	13,800	3/4	L, U	T, Q, A, B	R	P	NO SOURCE
	Resistance	Power	Terminal	Resistance	Level 1	Level 2	
Part Number	Value (Ohms)	Rating (W)	Characteristic (#)	Tolerance (%)	(FRL)(&)	(FRL)(&)	Manufacturer
RBR57#14001%&	14,000	3/4	L, U	T, Q, A, B	R	P	NO SOURCE
RBR57#14201%&	14,200	3/4	L, U	T, Q, A, B	R	P	NO SOURCE

RBR57#14301%&	14,300	3/4	L, U	T, Q, A, B	R	P	NO SOURCE
RBR57#14501%&	14,500	3/4	L, U	T, Q, A, B	R	P	NO SOURCE
RBR57#14701%&	14,700	3/4	L, U	T, Q, A, B	R	P	NO SOURCE
RBR57#14901%&	14,900	3/4	L, U	T, Q, A, B	R	P	NO SOURCE
RBR57#15001%&	15,000	3/4	L, U	T, Q, A, B	R	P	NO SOURCE
RBR57#15201%&	15,200	3/4	L, U	T, Q, A, B	R	P	NO SOURCE
RBR57#15401%&	15,400	3/4	L, U	T, Q, A, B	R	P	NO SOURCE
RBR57#15601%&	15,600	3/4	L, U	T, Q, A, B	R	P	NO SOURCE
RBR57#15801%&	15,800	3/4	L, U	T, Q, A, B	R	P	NO SOURCE
RBR57#16001%&	16,000	3/4	L, U	T, Q, A, B	R	P	NO SOURCE
RBR57#16201%&	16,200	3/4	L, U	T, Q, A, B	R	P	NO SOURCE
RBR57#16401%&	16,400	3/4	L, U	T, Q, A, B	R	P	NO SOURCE
	Resistance	Power	Terminal	Resistance	Level 1	Level 2	
Part Number	Value (Ohms)	Rating (W)	Characteristic (#)	Tolerance (%)	(FRL)(&)	(FRL)(&)	Manufacturer
RBR57#16501%&	16,500	3/4	L, U	T, Q, A, B	R	P	NO SOURCE
RBR57#16701%&	16,700	3/4	L, U	T, Q, A, B	R	P	NO SOURCE
RBR57#16901%&	16,900	3/4	L, U	T, Q, A, B	R	P	NO SOURCE
RBR57#17201%&	17,200	3/4	L, U	T, Q, A, B	R	P	NO SOURCE
RBR57#17401%&	17,400	3/4	L, U	T, Q, A, B	R	P	NO SOURCE
RBR57#17601%&	17,600	3/4	L, U	T, Q, A, B	R	P	NO SOURCE
RBR57#17801%&	17,800	3/4	L, U	T, Q, A, B	R	P	NO SOURCE
RBR57#18001%&	18,000	3/4	L, U	T, Q, A, B	R	P	NO SOURCE
RBR57#18201%&	18,200	3/4	L, U	T, Q, A, B	R	P	NO SOURCE
RBR57#18401%&	18,400	3/4	L, U	T, Q, A, B	R	P	NO SOURCE
RBR57#18701%&	18,700	3/4	L, U	T, Q, A, B	R	P	NO SOURCE
RBR57#18901%&	18,900	3/4	L, U	T, Q, A, B	R	P	NO SOURCE
RBR57#19101%&	19,100	3/4	L, U	T, Q, A, B	R	P	NO SOURCE
RBR57#19301%&	19,300	3/4	L, U	T, Q, A, B	R	P	NO SOURCE
	Resistance	Power	Terminal	Resistance	Level 1	Level 2	
Part Number	Value (Ohms)	Rating (W)	Characteristic (#)	Tolerance (%)	(FRL)(&)	(FRL)(&)	Manufacturer
RBR57#19601%&	19,600	3/4	L, U	T, Q, A, B	R	P	NO SOURCE
RBR57#19801%&	19,800	3/4	L, U	T, Q, A, B	R	P	NO SOURCE
RBR57#20001%&	20,000	3/4	L, U	T, Q, A, B	R	P	NO SOURCE
RBR57#20301%&	20,300	3/4	L, U	T, Q, A, B	R	P	NO SOURCE
RBR57#20501%&	20,500	3/4	L, U	T, Q, A, B	R	P	NO SOURCE
RBR57#20801%&	20,800	3/4	L, U	T, Q, A, B	R	P	NO SOURCE
RBR57#21001%&	21,000	3/4	L, U	T, Q, A, B	R	P	NO SOURCE
RBR57#21301%&	21,300	3/4	L, U	T, Q, A, B	R	P	NO SOURCE
RBR57#21501%&	21,500	3/4	L, U	T, Q, A, B	R	P	NO SOURCE
RBR57#21801%&	21,800	3/4	L, U	T, Q, A, B	R	P	NO SOURCE
RBR57#22101%&	22,100	3/4	L, U	T, Q, A, B	R	P	NO SOURCE
RBR57#22301%&	22,300	3/4	L, U	T, Q, A, B	R	P	NO SOURCE
RBR57#22601%&	22,600	3/4	L, U	T, Q, A, B	R	P	NO SOURCE
RBR57#22901%&	22,900	3/4	L, U	T, Q, A, B	R	P	NO SOURCE
	Resistance	Power	Terminal	Resistance	Level 1	Level 2	
Part Number	Value (Ohms)	Rating (W)	Characteristic (#)	Tolerance (%)	(FRL)(&)	(FRL)(&)	Manufacturer
RBR57#23201%&	23,200	3/4	L, U	T, Q, A, B	R	P	NO SOURCE

RBR57#23401%&	23,400	3/4	L, U	T, Q, A, B	R	P	NO SOURCE
RBR57#23701%&	23,700	3/4	L, U	T, Q, A, B	R	P	NO SOURCE
RBR57#24001%&	24,000	3/4	L, U	T, Q, A, B	R	P	NO SOURCE
RBR57#24301%&	24,300	3/4	L, U	T, Q, A, B	R	P	NO SOURCE
RBR57#24601%&	24,600	3/4	L, U	T, Q, A, B	R	P	NO SOURCE
RBR57#24901%&	24,900	3/4	L, U	T, Q, A, B	R	P	NO SOURCE
RBR57#25201%&	25,200	3/4	L, U	T, Q, A, B	R	P	NO SOURCE
RBR57#25501%&	25,500	3/4	L, U	T, Q, A, B	R	P	NO SOURCE
RBR57#25801%&	25,800	3/4	L, U	T, Q, A, B	R	P	NO SOURCE
RBR57#26101%&	26,100	3/4	L, U	T, Q, A, B	R	P	NO SOURCE
RBR57#26401%&	26,400	3/4	L, U	T, Q, A, B	R	P	NO SOURCE
RBR57#26701%&	26,700	3/4	L, U	T, Q, A, B	R	P	NO SOURCE
RBR57#27101%&	27,100	3/4	L, U	T, Q, A, B	R	P	NO SOURCE
	Resistance	Power	Terminal	Resistance	Level 1	Level 2	
Part Number	Value (Ohms)	Rating (W)	Characteristic (#)	Tolerance (%)	(FRL)(&)	(FRL)(&)	Manufacturer
RBR57#27401%&	27,400	3/4	L, U	T, Q, A, B	R	P	NO SOURCE
RBR57#27701%&	27,700	3/4	L, U	T, Q, A, B	R	P	NO SOURCE
RBR57#28001%&	28,000	3/4	L, U	T, Q, A, B	R	P	NO SOURCE
RBR57#28401%&	28,400	3/4	L, U	T, Q, A, B	R	P	NO SOURCE
RBR57#28701%&	28,700	3/4	L, U	T, Q, A, B	R	P	NO SOURCE
RBR57#29101%&	29,100	3/4	L, U	T, Q, A, B	R	P	NO SOURCE
RBR57#29401%&	29,400	3/4	L, U	T, Q, A, B	R	P	NO SOURCE
RBR57#29801%&	29,800	3/4	L, U	T, Q, A, B	R	P	NO SOURCE
RBR57#30101%&	30,100	3/4	L, U	T, Q, A, B	R	P	NO SOURCE
RBR57#30501%&	30,500	3/4	L, U	T, Q, A, B	R	P	NO SOURCE
RBR57#30901%&	30,900	3/4	L, U	T, Q, A, B	R	P	NO SOURCE
RBR57#31201%&	31,200	3/4	L, U	T, Q, A, B	R	P	NO SOURCE
	Resistance	Power	Terminal	Resistance	Level 1	Level 2	
Part Number	Value (Ohms)	Rating (W)	Characteristic (#)	Tolerance (%)	(FRL)(&)	(FRL)(&)	Manufacturer
RBR57#31601%&	31,600	3/4	L, U	T, Q, A, B	R	P	NO SOURCE
RBR57#32001%&	32,000	3/4	L, U	T, Q, A, B	R	P	NO SOURCE
RBR57#32401%&	32,400	3/4	L, U	T, Q, A, B	R	P	NO SOURCE
RBR57#32801%&	32,800	3/4	L, U	T, Q, A, B	R	P	NO SOURCE
RBR57#33201%&	33,200	3/4	L, U	T, Q, A, B	R	P	NO SOURCE
RBR57#33601%&	33,600	3/4	L, U	T, Q, A, B	R	P	NO SOURCE
RBR57#34001%&	34,000	3/4	L, U	T, Q, A, B	R	P	NO SOURCE
RBR57#34401%&	34,400	3/4	L, U	T, Q, A, B	R	P	NO SOURCE
RBR57#34801%&	34,800	3/4	L, U	T, Q, A, B	R	P	NO SOURCE
RBR57#35201%&	35,200	3/4	L, U	T, Q, A, B	R	P	NO SOURCE
RBR57#35701%&	35,700	3/4	L, U	T, Q, A, B	R	P	NO SOURCE
RBR57#36101%&	36,100	3/4	L, U	T, Q, A, B	R	P	NO SOURCE
RBR57#36501%&	36,500	3/4	L, U	T, Q, A, B	R	P	NO SOURCE
RBR57#37001%&	37,000	3/4	L, U	T, Q, A, B	R	P	NO SOURCE
	Resistance	Power	Terminal	Resistance	Level 1	Level 2	
Part Number	Value (Ohms)	Rating (W)	Characteristic (#)	Tolerance (%)	(FRL)(&)	(FRL)(&)	Manufacturer
RBR57#37401%&	37,400	3/4	L, U	T, Q, A, B	R	P	NO SOURCE
RBR57#37901%&	37,900	3/4	L, U	T, Q, A, B	R	P	NO SOURCE

RBR57#38301%&	38,300	3/4	L, U	T, Q, A, B	R	P	NO SOURCE
RBR57#38801%&	38,800	3/4	L, U	T, Q, A, B	R	P	NO SOURCE
RBR57#39201%&	39,200	3/4	L, U	T, Q, A, B	R	P	NO SOURCE
RBR57#39701%&	39,700	3/4	L, U	T, Q, A, B	R	P	NO SOURCE
RBR57#40201%&	40,200	3/4	L, U	T, Q, A, B	R	P	NO SOURCE
RBR57#40701%&	40,700	3/4	L, U	T, Q, A, B	R	P	NO SOURCE
RBR57#41201%&	41,200	3/4	L, U	T, Q, A, B	R	P	NO SOURCE
RBR57#41701%&	41,700	3/4	L, U	T, Q, A, B	R	P	NO SOURCE
RBR57#42201%&	42,200	3/4	L, U	T, Q, A, B	R	P	NO SOURCE
RBR57#42701%&	42,700	3/4	L, U	T, Q, A, B	R	P	NO SOURCE
RBR57#43201%&	43,200	3/4	L, U	T, Q, A, B	R	P	NO SOURCE
RBR57#43701%&	43,700	3/4	L, U	T, Q, A, B	R	P	NO SOURCE
	Resistance	Power	Terminal	Resistance	Level 1	Level 2	
Part Number	Value (Ohms)	Rating (W)	Characteristic (#)	Tolerance (%)	(FRL)(&)	(FRL)(&)	Manufacturer
RBR57#44201%&	44,200	3/4	L, U	T, Q, A, B	R	P	NO SOURCE
RBR57#44801%&	44,800	3/4	L, U	T, Q, A, B	R	P	NO SOURCE
RBR57#45301%&	45,300	3/4	L, U	T, Q, A, B	R	P	NO SOURCE
RBR57#45901%&	45,900	3/4	L, U	T, Q, A, B	R	P	NO SOURCE
RBR57#46401%&	46,400	3/4	L, U	T, Q, A, B	R	P	NO SOURCE
RBR57#47001%&	47,000	3/4	L, U	T, Q, A, B	R	P	NO SOURCE
RBR57#47501%&	47,500	3/4	L, U	T, Q, A, B	R	P	NO SOURCE
RBR57#48101%&	48,100	3/4	L, U	T, Q, A, B	R	P	NO SOURCE
RBR57#48701%&	48,700	3/4	L, U	T, Q, A, B	R	P	NO SOURCE
RBR57#49301%&	49,300	3/4	L, U	T, Q, A, B	R	P	NO SOURCE
RBR57#49901%&	49,900	3/4	L, U	T, Q, A, B	R	P	NO SOURCE
RBR57#50501%&	50,500	3/4	L, U	T, Q, A, B	R	P	NO SOURCE
RBR57#51101%&	51,100	3/4	L, U	T, Q, A, B	R	P	NO SOURCE
RBR57#51701%&	51,700	3/4	L, U	T, Q, A, B	R	P	NO SOURCE
	Resistance	Power	Terminal	Resistance	Level 1	Level 2	
Part Number	Value (Ohms)	Rating (W)	Characteristic (#)	Tolerance (%)	(FRL)(&)	(FRL)(&)	Manufacturer
RBR57#52301%&	52,300	3/4	L, U	T, Q, A, B	R	P	NO SOURCE
RBR57#53001%&	53,000	3/4	L, U	T, Q, A, B	R	P	NO SOURCE
RBR57#53601%&	53,600	3/4	L, U	T, Q, A, B	R	P	NO SOURCE
RBR57#54201%&	54,200	3/4	L, U	T, Q, A, B	R	P	NO SOURCE
RBR57#54901%&	54,900	3/4	L, U	T, Q, A, B	R	P	NO SOURCE
RBR57#55601%&	55,600	3/4	L, U	T, Q, A, B	R	P	NO SOURCE
RBR57#56201%&	56,200	3/4	L, U	T, Q, A, B	R	P	NO SOURCE
RBR57#56901%&	56,900	3/4	L, U	T, Q, A, B	R	P	NO SOURCE
RBR57#57601%&	57,600	3/4	L, U	T, Q, A, B	R	P	NO SOURCE
RBR57#58301%&	58,300	3/4	L, U	T, Q, A, B	R	P	NO SOURCE
RBR57#59001%&	59,000	3/4	L, U	T, Q, A, B	R	P	NO SOURCE
RBR57#59701%&	59,700	3/4	L, U	T, Q, A, B	R	P	NO SOURCE
RBR57#60401%&	60,400	3/4	L, U	T, Q, A, B	R	P	NO SOURCE
RBR57#61201%&	61,200	3/4	L, U	T, Q, A, B	R	P	NO SOURCE
	Resistance	Power	Terminal	Resistance	Level 1	Level 2	
Part Number	Value (Ohms)	Rating (W)	Characteristic (#)	Tolerance (%)	(FRL)(&)	(FRL)(&)	Manufacturer
RBR57#61901%&	61,900	3/4	L, U	T, Q, A, B	R	P	NO SOURCE

RBR57#62601%&	62,600	3/4	L, U	T, Q, A, B	R	P	NO SOURCE
RBR57#63401%&	63,400	3/4	L, U	T, Q, A, B	R	P	NO SOURCE
RBR57#64201%&	64,200	3/4	L, U	T, Q, A, B	R	P	NO SOURCE
RBR57#64901%&	64,900	3/4	L, U	T, Q, A, B	R	P	NO SOURCE
RBR57#65701%&	65,700	3/4	L, U	T, Q, A, B	R	P	NO SOURCE
RBR57#66501%&	66,500	3/4	L, U	T, Q, A, B	R	P	NO SOURCE
RBR57#67301%&	67,300	3/4	L, U	T, Q, A, B	R	P	NO SOURCE
RBR57#68101%&	68,100	3/4	L, U	T, Q, A, B	R	P	NO SOURCE
RBR57#69001%&	69,000	3/4	L, U	T, Q, A, B	R	P	NO SOURCE
RBR57#69801%&	69,800	3/4	L, U	T, Q, A, B	R	P	NO SOURCE
RBR57#70601%&	70,600	3/4	L, U	T, Q, A, B	R	P	NO SOURCE
	Resistance	Power	Terminal	Resistance	Level 1	Level 2	
Part Number	Value (Ohms)	Rating (W)	Characteristic (#)	Tolerance (%)	(FRL)(&)	(FRL)(&)	Manufacturer
RBR57#71501%&	71,500	3/4	L, U	T, Q, A, B	R	P	NO SOURCE
RBR57#72301%&	72,300	3/4	L, U	T, Q, A, B	R	P	NO SOURCE
RBR57#73201%&	73,200	3/4	L, U	T, Q, A, B	R	P	NO SOURCE
RBR57#74101%&	74,100	3/4	L, U	T, Q, A, B	R	P	NO SOURCE
RBR57#75001%&	75,000	3/4	L, U	T, Q, A, B	R	P	NO SOURCE
RBR57#75901%&	75,900	3/4	L, U	T, Q, A, B	R	P	NO SOURCE
RBR57#76802%&	76,800	3/4	L, U	T, Q, A, B	R	P	NO SOURCE
RBR57#77702%&	77,700	3/4	L, U	T, Q, A, B	R	P	NO SOURCE
RBR57#78702%&	78,700	3/4	L, U	T, Q, A, B	R	P	NO SOURCE
RBR57#79602%&	79,600	3/4	L, U	T, Q, A, B	R	P	NO SOURCE
RBR57#80602%&	80,600	3/4	L, U	T, Q, A, B	R	P	NO SOURCE
RBR57#81602%&	81,600	3/4	L, U	T, Q, A, B	R	P	NO SOURCE
RBR57#82502%&	82,500	3/4	L, U	T, Q, A, B	R	P	NO SOURCE
RBR57#83502%&	83,500	3/4	L, U	T, Q, A, B	R	P	NO SOURCE
	Resistance	Power	Terminal	Resistance	Level 1	Level 2	
Part Number	Value (Ohms)	Rating (W)	Characteristic (#)	Tolerance (%)	(FRL)(&)	(FRL)(&)	Manufacturer
RBR57#84502%&	84,500	3/4	L, U	T, Q, A, B	R	P	NO SOURCE
RBR57#85602%&	85,600	3/4	L, U	T, Q, A, B	R	P	NO SOURCE
RBR57#86602%&	86,600	3/4	L, U	T, Q, A, B	R	P	NO SOURCE
RBR57#87602%&	87,600	3/4	L, U	T, Q, A, B	R	P	NO SOURCE
RBR57#88702%&	88,700	3/4	L, U	T, Q, A, B	R	P	NO SOURCE
RBR57#89802%&	89,800	3/4	L, U	T, Q, A, B	R	P	NO SOURCE
RBR57#90902%&	90,900	3/4	L, U	T, Q, A, B	R	P	NO SOURCE
RBR57#92002%&	92,000	3/4	L, U	T, Q, A, B	R	P	NO SOURCE
RBR57#93102%&	93,100	3/4	L, U	T, Q, A, B	R	P	NO SOURCE
RBR57#94202%&	94,200	3/4	L, U	T, Q, A, B	R	P	NO SOURCE
RBR57#95302%&	95,300	3/4	L, U	T, Q, A, B	R	P	NO SOURCE
RBR57#96502%&	96,500	3/4	L, U	T, Q, A, B	R	P	NO SOURCE
RBR57#97602%&	97,600	3/4	L, U	T, Q, A, B	R	P	NO SOURCE
RBR57#98802%&	98,800	3/4	L, U	T, Q, A, B	R	P	NO SOURCE
	Resistance	Power	Terminal	Resistance	Level 1	Level 2	
Part Number	Value (Ohms)	Rating (W)	Characteristic (#)	Tolerance (%)	(FRL)(&)	(FRL)(&)	Manufacturer

	Resistance	Power	Terminal	Resistance	Level 1	Level 2	
Part Number	Value (Ohms)	Rating (W)	Characteristic (#)	Tolerance (%)	(FRL)(&)	(FRL)(&)	Manufacturer
RBR57#10002%&	100,000	3/4	L, U	T, Q, A, B	R	P	NO SOURCE
RBR57#10102%&	101,000	3/4	L, U	T, Q, A, B	R	P	NO SOURCE
RBR57#10202%&	102,000	3/4	L, U	T, Q, A, B	R	P	NO SOURCE
RBR57#10402%&	104,000	3/4	L, U	T, Q, A, B	R	P	NO SOURCE
RBR57#10502%&	105,000	3/4	L, U	T, Q, A, B	R	P	NO SOURCE
RBR57#10602%&	106,000	3/4	L, U	T, Q, A, B	R	P	NO SOURCE
RBR57#10702%&	107,000	3/4	L, U	T, Q, A, B	R	P	NO SOURCE
RBR57#10902%&	109,000	3/4	L, U	T, Q, A, B	R	P	NO SOURCE
RBR57#11002%&	110,000	3/4	L, U	T, Q, A, B	R	P	NO SOURCE
RBR57#11102%&	111,000	3/4	L, U	T, Q, A, B	R	P	NO SOURCE
RBR57#11302%&	113,000	3/4	L, U	T, Q, A, B	R	P	NO SOURCE
RBR57#11402%&	114,000	3/4	L, U	T, Q, A, B	R	P	NO SOURCE
RBR57#11502%&	115,000	3/4	L, U	T, Q, A, B	R	P	NO SOURCE
RBR57#11702%&	117,000	3/4	L, U	T, Q, A, B	R	P	NO SOURCE
	Resistance	Power	Terminal	Resistance	Level 1	Level 2	
Part Number	Value (Ohms)	Rating (W)	Characteristic (#)	Tolerance (%)	(FRL)(&)	(FRL)(&)	Manufacturer
RBR57#11802%&	118,000	3/4	L, U	T, Q, A, B	R	P	NO SOURCE
RBR57#12002%&	120,000	3/4	L, U	T, Q, A, B	R	P	NO SOURCE
RBR57#12102%&	121,000	3/4	L, U	T, Q, A, B	R	P	NO SOURCE
RBR57#12302%&	123,000	3/4	L, U	T, Q, A, B	R	P	NO SOURCE
RBR57#12402%&	124,000	3/4	L, U	T, Q, A, B	R	P	NO SOURCE
RBR57#12602%&	126,000	3/4	L, U	T, Q, A, B	R	P	NO SOURCE
RBR57#12702%&	127,000	3/4	L, U	T, Q, A, B	R	P	NO SOURCE
RBR57#12902%&	129,000	3/4	L, U	T, Q, A, B	R	P	NO SOURCE
RBR57#13002%&	130,000	3/4	L, U	T, Q, A, B	R	P	NO SOURCE
RBR57#13202%&	132,000	3/4	L, U	T, Q, A, B	R	P	NO SOURCE
RBR57#13302%&	133,000	3/4	L, U	T, Q, A, B	R	P	NO SOURCE
RBR57#13502%&	135,000	3/4	L, U	T, Q, A, B	R	P	NO SOURCE
RBR57#13702%&	137,000	3/4	L, U	T, Q, A, B	R	P	NO SOURCE
RBR57#13802%&	138,000	3/4	L, U	T, Q, A, B	R	P	NO SOURCE
	Resistance	Power	Terminal	Resistance	Level 1	Level 2	
Part Number	Value (Ohms)	Rating (W)	Characteristic (#)	Tolerance (%)	(FRL)(&)	(FRL)(&)	Manufacturer
RBR57#14002%&	140,000	3/4	L, U	T, Q, A, B	R	P	NO SOURCE
RBR57#14202%&	142,000	3/4	L, U	T, Q, A, B	R	P	NO SOURCE
RBR57#14302%&	143,000	3/4	L, U	T, Q, A, B	R	P	NO SOURCE
RBR57#14502%&	145,000	3/4	L, U	T, Q, A, B	R	P	NO SOURCE
RBR57#14702%&	147,000	3/4	L, U	T, Q, A, B	R	P	NO SOURCE
RBR57#14902%&	149,000	3/4	L, U	T, Q, A, B	R	P	NO SOURCE
RBR57#15002%&	150,000	3/4	L, U	T, Q, A, B	R	P	NO SOURCE
RBR57#15202%&	152,000	3/4	L, U	T, Q, A, B	R	P	NO SOURCE
RBR57#15402%&	154,000	3/4	L, U	T, Q, A, B	R	P	NO SOURCE
RBR57#15602%&	156,000	3/4	L, U	T, Q, A, B	R	P	NO SOURCE

RBR57#15802%&	158,000	3/4	L, U	T, Q, A, B	R	P	NO SOURCE
RBR57#16002%&	160,000	3/4	L, U	T, Q, A, B	R	P	NO SOURCE
RBR57#16202%&	162,000	3/4	L, U	T, Q, A, B	R	P	NO SOURCE
RBR57#16402%&	164,000	3/4	L, U	T, Q, A, B	R	P	NO SOURCE
	Resistance	Power	Terminal	Resistance	Level 1	Level 2	
Part Number	Value (Ohms)	Rating (W)	Characteristic (#)	Tolerance (%)	(FRL)(&)	(FRL)(&)	Manufacturer
RBR57#16502%&	165,000	3/4	L, U	T, Q, A, B	R	P	NO SOURCE
RBR57#16702%&	167,000	3/4	L, U	T, Q, A, B	R	P	NO SOURCE
RBR57#16902%&	169,000	3/4	L, U	T, Q, A, B	R	P	NO SOURCE
RBR57#17202%&	172,000	3/4	L, U	T, Q, A, B	R	P	NO SOURCE
RBR57#17402%&	174,000	3/4	L, U	T, Q, A, B	R	P	NO SOURCE
RBR57#17602%&	176,000	3/4	L, U	T, Q, A, B	R	P	NO SOURCE
RBR57#17802%&	178,000	3/4	L, U	T, Q, A, B	R	P	NO SOURCE
RBR57#18002%&	180,000	3/4	L, U	T, Q, A, B	R	P	NO SOURCE
RBR57#18202%&	182,000	3/4	L, U	T, Q, A, B	R	P	NO SOURCE
RBR57#18402%&	184,000	3/4	L, U	T, Q, A, B	R	P	NO SOURCE
RBR57#18702%&	187,000	3/4	L, U	T, Q, A, B	R	P	NO SOURCE
RBR57#18902%&	189,000	3/4	L, U	T, Q, A, B	R	P	NO SOURCE
RBR57#19102%&	191,000	3/4	L, U	T, Q, A, B	R	P	NO SOURCE
RBR57#19302%&	193,000	3/4	L, U	T, Q, A, B	R	P	NO SOURCE
	Resistance	Power	Terminal	Resistance	Level 1	Level 2	
Part Number	Value (Ohms)	Rating (W)	Characteristic (#)	Tolerance (%)	(FRL)(&)	(FRL)(&)	Manufacturer
RBR57#19602%&	196,000	3/4	L, U	T, Q, A, B	R	P	NO SOURCE
RBR57#19802%&	198,000	3/4	L, U	T, Q, A, B	R	P	NO SOURCE
RBR57#20002%&	200,000	3/4	L, U	T, Q, A, B	R	P	NO SOURCE
RBR57#20302%&	203,000	3/4	L, U	T, Q, A, B	R	P	NO SOURCE
RBR57#20502%&	205,000	3/4	L, U	T, Q, A, B	R	P	NO SOURCE
RBR57#20802%&	208,000	3/4	L, U	T, Q, A, B	R	P	NO SOURCE
RBR57#21002%&	210,000	3/4	L, U	T, Q, A, B	R	P	NO SOURCE
RBR57#21302%&	213,000	3/4	L, U	T, Q, A, B	R	P	NO SOURCE
RBR57#21502%&	215,000	3/4	L, U	T, Q, A, B	R	P	NO SOURCE
RBR57#21802%&	218,000	3/4	L, U	T, Q, A, B	R	P	NO SOURCE
RBR57#22102%&	221,000	3/4	L, U	T, Q, A, B	R	P	NO SOURCE
RBR57#22302%&	223,000	3/4	L, U	T, Q, A, B	R	P	NO SOURCE
RBR57#22602%&	226,000	3/4	L, U	T, Q, A, B	R	P	NO SOURCE
RBR57#22902%&	229,000	3/4	L, U	T, Q, A, B	R	P	NO SOURCE
	Resistance	Power	Terminal	Resistance	Level 1	Level 2	
Part Number	Value (Ohms)	Rating (W)	Characteristic (#)	Tolerance (%)	(FRL)(&)	(FRL)(&)	Manufacturer
RBR57#23202%&	232,000	3/4	L, U	T, Q, A, B	R	P	NO SOURCE
RBR57#23402%&	234,000	3/4	L, U	T, Q, A, B	R	P	NO SOURCE
RBR57#23702%&	237,000	3/4	L, U	T, Q, A, B	R	P	NO SOURCE
RBR57#24002%&	240,000	3/4	L, U	T, Q, A, B	R	P	NO SOURCE
RBR57#24302%&	243,000	3/4	L, U	T, Q, A, B	R	P	NO SOURCE
RBR57#24602%&	246,000	3/4	L, U	T, Q, A, B	R	P	NO SOURCE
RBR57#24902%&	249,000	3/4	L, U	T, Q, A, B	R	P	NO SOURCE
RBR57#25202%&	252,000	3/4	L, U	T, Q, A, B	R	P	NO SOURCE
RBR57#25502%&	255,000	3/4	L, U	T, Q, A, B	R	P	NO SOURCE

RBR57#25802%&	258,000	3/4	L, U	T, Q, A, B	R	P	NO SOURCE
RBR57#26102%&	261,000	3/4	L, U	T, Q, A, B	R	P	NO SOURCE
RBR57#26402%&	264,000	3/4	L, U	T, Q, A, B	R	P	NO SOURCE
RBR57#26702%&	267,000	3/4	L, U	T, Q, A, B	R	P	NO SOURCE
RBR57#27102%&	271,000	3/4	L, U	T, Q, A, B	R	P	NO SOURCE
	Resistance	Power	Terminal	Resistance	Level 1	Level 2	
Part Number	Value (Ohms)	Rating (W)	Characteristic (#)	Tolerance (%)	(FRL)(&)	(FRL)(&)	Manufacturer
RBR57#27402%&	274,000	3/4	L, U	T, Q, A, B	R	P	NO SOURCE
RBR57#27702%&	277,000	3/4	L, U	T, Q, A, B	R	P	NO SOURCE
RBR57#28002%&	280,000	3/4	L, U	T, Q, A, B	R	P	NO SOURCE
RBR57#28402%&	284,000	3/4	L, U	T, Q, A, B	R	P	NO SOURCE
RBR57#28702%&	287,000	3/4	L, U	T, Q, A, B	R	P	NO SOURCE
RBR57#29102%&	291,000	3/4	L, U	T, Q, A, B	R	P	NO SOURCE
RBR57#29402%&	294,000	3/4	L, U	T, Q, A, B	R	P	NO SOURCE
RBR57#29802%&	298,000	3/4	L, U	T, Q, A, B	R	P	NO SOURCE
RBR57#30102%&	301,000	3/4	L, U	T, Q, A, B	R	P	NO SOURCE
RBR57#30502%&	305,000	3/4	L, U	T, Q, A, B	R	P	NO SOURCE
RBR57#30902%&	309,000	3/4	L, U	T, Q, A, B	R	P	NO SOURCE
RBR57#31202%&	312,000	3/4	L, U	T, Q, A, B		P	NO SOURCE
	Resistance	Power	Terminal	Resistance	Level 1	Level 2	
Part Number	Value (Ohms)	Rating (W)	Characteristic (#)	Tolerance (%)	(FRL)(&)	(FRL)(&)	Manufacturer
RBR57#31602%&	316,000	3/4	L, U	T, Q, A, B		P	NO SOURCE
RBR57#32002%&	320,000	3/4	L, U	T, Q, A, B		P	NO SOURCE
RBR57#32402%&	324,000	3/4	L, U	T, Q, A, B		P	NO SOURCE
RBR57#32802%&	328,000	3/4	L, U	T, Q, A, B		P	NO SOURCE
RBR57#33202%&	332,000	3/4	L, U	T, Q, A, B		P	NO SOURCE
RBR57#33602%&	336,000	3/4	L, U	T, Q, A, B		P	NO SOURCE
RBR57#34002%&	340,000	3/4	L, U	T, Q, A, B		P	NO SOURCE
RBR57#34402%&	344,000	3/4	L, U	T, Q, A, B		P	NO SOURCE
RBR57#34802%&	348,000	3/4	L, U	T, Q, A, B		P	NO SOURCE
RBR57#35202%&	352,000	3/4	L, U	T, Q, A, B		P	NO SOURCE
RBR57#35702%&	357,000	3/4	L, U	T, Q, A, B		P	NO SOURCE
RBR57#36102%&	361,000	3/4	L, U	T, Q, A, B		P	NO SOURCE
RBR57#36502%&	365,000	3/4	L, U	T, Q, A, B		P	NO SOURCE
RBR57#37002%&	370,000	3/4	L, U	T, Q, A, B		P	NO SOURCE
	Resistance	Power	Terminal	Resistance	Level 1	Level 2	
Part Number	Value (Ohms)	Rating (W)	Characteristic (#)	Tolerance (%)	(FRL)(&)	(FRL)(&)	Manufacturer
RBR57#37402%&	374,000	3/4	L, U	T, Q, A, B		P	NO SOURCE
RBR57#37902%&	379,000	3/4	L, U	T, Q, A, B		P	NO SOURCE
RBR57#38302%&	383,000	3/4	L, U	T, Q, A, B		P	NO SOURCE
RBR57#38802%&	388,000	3/4	L, U	T, Q, A, B		P	NO SOURCE
RBR57#39202%&	392,000	3/4	L, U	T, Q, A, B		P	NO SOURCE
RBR57#39702%&	397,000	3/4	L, U	T, Q, A, B		P	NO SOURCE
RBR57#40202%&	402,000	3/4	L, U	T, Q, A, B		P	NO SOURCE
RBR57#40702%&	407,000	3/4	L, U	T, Q, A, B		P	NO SOURCE
RBR57#41202%&	412,000	3/4	L, U	T, Q, A, B		P	NO SOURCE
RBR57#41702%&	417,000	3/4	L, U	T, Q, A, B		P	NO SOURCE

RBR57#42202%&	422,000	3/4	L, U	T, Q, A, B		P	NO SOURCE
RBR57#42702%&	427,000	3/4	L, U	T, Q, A, B		P	NO SOURCE
RBR57#43202%&	432,000	3/4	L, U	T, Q, A, B		P	NO SOURCE
RBR57#43702%&	437,000	3/4	L, U	T, Q, A, B		P	NO SOURCE
	Resistance	Power	Terminal	Resistance	Level 1	Level 2	
Part Number	Value (Ohms)	Rating (W)	Characteristic (#)	Tolerance (%)	(FRL)(&)	(FRL)(&)	Manufacturer
RBR57#44202%&	442,000	3/4	L, U	T, Q, A, B		P	NO SOURCE
RBR57#44802%&	448,000	3/4	L, U	T, Q, A, B		P	NO SOURCE
RBR57#45302%&	453,000	3/4	L, U	T, Q, A, B		P	NO SOURCE
RBR57#45902%&	459,000	3/4	L, U	T, Q, A, B		P	NO SOURCE
RBR57#46402%&	464,000	3/4	L, U	T, Q, A, B		P	NO SOURCE
RBR57#47002%&	470,000	3/4	L, U	T, Q, A, B		P	NO SOURCE
RBR57#47502%&	475,000	3/4	L, U	T, Q, A, B		P	NO SOURCE
RBR57#48102%&	481,000	3/4	L, U	T, Q, A, B		P	NO SOURCE
RBR57#48702%&	487,000	3/4	L, U	T, Q, A, B		P	NO SOURCE
RBR57#49302%&	493,000	3/4	L, U	T, Q, A, B		P	NO SOURCE
RBR57#49902%&	499,000	3/4	L, U	T, Q, A, B		P	NO SOURCE
RBR57#50502%&	505,000	3/4	L, U	T, Q, A, B		P	NO SOURCE
RBR57#51102%&	511,000	3/4	L, U	T, Q, A, B		P	NO SOURCE
RBR57#51702%&	517,000	3/4	L, U	T, Q, A, B		P	NO SOURCE
	Resistance	Power	Terminal	Resistance	Level 1	Level 2	
Part Number	Value (Ohms)	Rating (W)	Characteristic (#)	Tolerance (%)	(FRL)(&)	(FRL)(&)	Manufacturer
RBR57#52302%&	523,000	3/4	L, U	T, Q, A, B		P	NO SOURCE
RBR57#53002%&	530,000	3/4	L, U	T, Q, A, B		P	NO SOURCE
RBR57#53602%&	536,000	3/4	L, U	T, Q, A, B		P	NO SOURCE
RBR57#54202%&	542,000	3/4	L, U	T, Q, A, B		P	NO SOURCE
RBR57#54902%&	549,000	3/4	L, U	T, Q, A, B		P	NO SOURCE
RBR57#55602%&	556,000	3/4	L, U	T, Q, A, B		P	NO SOURCE
RBR57#56202%&	562,000	3/4	L, U	T, Q, A, B		P	NO SOURCE
RBR57#56902%&	569,000	3/4	L, U	T, Q, A, B		P	NO SOURCE
RBR57#57602%&	576,000	3/4	L, U	T, Q, A, B		P	NO SOURCE
RBR57#58302%&	583,000	3/4	L, U	T, Q, A, B		P	NO SOURCE
RBR57#59002%&	590,000	3/4	L, U	T, Q, A, B		P	NO SOURCE
RBR57#59702%&	597,000	3/4	L, U	T, Q, A, B		P	NO SOURCE
RBR57#60402%&	604,000	3/4	L, U	T, Q, A, B		P	NO SOURCE
RBR57#61202%&	612,000	3/4	L, U	T, Q, A, B		P	NO SOURCE
	Resistance	Power	Terminal	Resistance	Level 1	Level 2	
Part Number	Value (Ohms)	Rating (W)	Characteristic (#)	Tolerance (%)	(FRL)(&)	(FRL)(&)	Manufacturer
RBR57#61902%&	619,000	3/4	L, U	T, Q, A, B		P	NO SOURCE
RBR57#62602%&	626,000	3/4	L, U	T, Q, A, B		P	NO SOURCE
RBR57#63402%&	634,000	3/4	L, U	T, Q, A, B		P	NO SOURCE
RBR57#64202%&	642,000	3/4	L, U	T, Q, A, B		P	NO SOURCE
RBR57#64902%&	649,000	3/4	L, U	T, Q, A, B		P	NO SOURCE
RBR57#65702%&	657,000	3/4	L, U	T, Q, A, B		P	NO SOURCE
RBR57#66502%&	665,000	3/4	L, U	T, Q, A, B		P	NO SOURCE
RBR57#67302%&	673,000	3/4	L, U	T, Q, A, B		P	NO SOURCE
RBR57#68102%&	681,000	3/4	L, U	T, Q, A, B		P	NO SOURCE

RBR57#69002%&	690,000	3/4	L, U	T, Q, A, B		P	NO SOURCE
RBR57#69802%&	698,000	3/4	L, U	T, Q, A, B		P	NO SOURCE
RBR57#70602%&	706,000	3/4	L, U	T, Q, A, B		P	NO SOURCE
RBR57#71502%&	715,000	3/4	L, U	T, Q, A, B		P	NO SOURCE
RBR57#72302%&	723,000	3/4	L, U	T, Q, A, B		P	NO SOURCE
	Resistance	Power	Terminal	Resistance	Level 1	Level 2	
Part Number	Value (Ohms)	Rating (W)	Characteristic (#)	Tolerance (%)	(FRL)(&)	(FRL)(&)	Manufacturer
RBR57#73202%&	732,000	3/4	L, U	T, Q, A, B		P	NO SOURCE
RBR57#74102%&	741,000	3/4	L, U	T, Q, A, B		P	NO SOURCE
RBR57#75002%&	750,000	3/4	L, U	T, Q, A, B		P	NO SOURCE
RBR57#75902%&	759,000	3/4	L, U	T, Q, A, B		P	NO SOURCE
RBR57#76802%&	768,000	3/4	L, U	T, Q, A, B		P	NO SOURCE
RBR57#77702%&	777,000	3/4	L, U	T, Q, A, B		P	NO SOURCE
RBR57#78702%&	787,000	3/4	L, U	T, Q, A, B		P	NO SOURCE
RBR57#79602%&	796,000	3/4	L, U	T, Q, A, B		P	NO SOURCE
RBR57#80602%&	806,000	3/4	L, U	T, Q, A, B		P	NO SOURCE
RBR57#81602%&	816,000	3/4	L, U	T, Q, A, B		P	NO SOURCE
RBR57#82502%&	825,000	3/4	L, U	T, Q, A, B		P	NO SOURCE
RBR57#83502%&	835,000	3/4	L, U	T, Q, A, B		P	NO SOURCE
RBR57#84502%&	845,000	3/4	L, U	T, Q, A, B		P	NO SOURCE
RBR57#85602%&	856,000	3/4	L, U	T, Q, A, B		P	NO SOURCE
	Resistance	Power	Terminal	Resistance	Level 1	Level 2	
Part Number	Value (Ohms)	Rating (W)	Characteristic (#)	Tolerance (%)	(FRL)(&)	(FRL)(&)	Manufacturer
RBR57#86602%&	866,000	3/4	L, U	T, Q, A, B		P	NO SOURCE
RBR57#87602%&	876,000	3/4	L, U	T, Q, A, B		P	NO SOURCE
RBR57#88702%&	887,000	3/4	L, U	T, Q, A, B		P	NO SOURCE
RBR57#89802%&	898,000	3/4	L, U	T, Q, A, B		P	NO SOURCE
RBR57#90902%&	909,000	3/4	L, U	T, Q, A, B		P	NO SOURCE
RBR57#92002%&	920,000	3/4	L, U	T, Q, A, B		P	NO SOURCE
RBR57#93102%&	931,000	3/4	L, U	T, Q, A, B		P	NO SOURCE
RBR57#94202%&	942,000	3/4	L, U	T, Q, A, B		P	NO SOURCE
RBR57#95302%&	953,000	3/4	L, U	T, Q, A, B		P	NO SOURCE
RBR57#96502%&	965,000	3/4	L, U	T, Q, A, B		P	NO SOURCE
RBR57#97602%&	976,000	3/4	L, U	T, Q, A, B		P	NO SOURCE
RBR57#98802%&	988,000	3/4	L, U	T, Q, A, B		P	NO SOURCE
	Resistance	Power	Terminal	Resistance	Level 1	Level 2	
Part Number	Value (Ohms)	Rating (W)	Characteristic (#)	Tolerance (%)	(FRL)(&)	(FRL)(&)	Manufacturer

RBR57 Wirewound Resistors: 1,000,000 Ohms through 1,370,000 Ohms

	Resistance	Power	Terminal	Resistance	Level 1	Level 2	
Part Number	Value (Ohms)	Rating (W)	Characteristic (#)	Tolerance (%)	(FRL)(&)	(FRL)(&)	Manufacturer
RBR57#10003%&	1,000,000	3/4	L, U	T, Q, A, B		P	NO SOURCE
RBR57#10103%&	1,010,000	3/4	L, U	T, Q, A, B		P	NO SOURCE
RBR57#10203%&	1,020,000	3/4	L, U	T, Q, A, B		P	NO SOURCE

RBR57#10403%&	1,040,000	3/4	L, U	T, Q, A, B		P	NO SOURCE
RBR57#10503%&	1,050,000	3/4	L, U	T, Q, A, B		P	NO SOURCE
RBR57#10603%&	1,060,000	3/4	L, U	T, Q, A, B		P	NO SOURCE
RBR57#10703%&	1,070,000	3/4	L, U	T, Q, A, B		P	NO SOURCE
RBR57#10903%&	1,090,000	3/4	L, U	T, Q, A, B		P	NO SOURCE
RBR57#11003%&	1,100,000	3/4	L, U	T, Q, A, B		P	NO SOURCE
RBR57#11103%&	1,110,000	3/4	L, U	T, Q, A, B		P	NO SOURCE
RBR57#11303%&	1,130,000	3/4	L, U	T, Q, A, B		P	NO SOURCE
RBR57#11403%&	1,140,000	3/4	L, U	T, Q, A, B		P	NO SOURCE
RBR57#11503%&	1,150,000	3/4	L, U	T, Q, A, B		P	NO SOURCE
RBR57#11703%&	1,170,000	3/4	L, U	T, Q, A, B		P	NO SOURCE
	Resistance	Power	Terminal	Resistance	Level 1	Level 2	
Part Number	Value (Ohms)	Rating (W)	Characteristic (#)	Tolerance (%)	(FRL)(&)	(FRL)(&)	Manufacturer
RBR57#11803%&	1,180,000	3/4	L, U	T, Q, A, B		P	NO SOURCE
RBR57#12003%&	1,200,000	3/4	L, U	T, Q, A, B		P	NO SOURCE
RBR57#12103%&	1,210,000	3/4	L, U	T, Q, A, B		P	NO SOURCE
RBR57#12303%&	1,230,000	3/4	L, U	T, Q, A, B		P	NO SOURCE
RBR57#12403%&	1,240,000	3/4	L, U	T, Q, A, B		P	NO SOURCE
RBR57#12603%&	1,260,000	3/4	L, U	T, Q, A, B		P	NO SOURCE
RBR57#12703%&	1,270,000	3/4	L, U	T, Q, A, B		P	NO SOURCE
RBR57#12903%&	1,290,000	3/4	L, U	T, Q, A, B		P	NO SOURCE
RBR57#13003%&	1,300,000	3/4	L, U	T, Q, A, B		P	NO SOURCE
RBR57#13203%&	1,320,000	3/4	L, U	T, Q, A, B		P	NO SOURCE
RBR57#13303%&	1,330,000	3/4	L, U	T, Q, A, B		P	NO SOURCE
RBR57#13503%&	1,350,000	3/4	L, U	T, Q, A, B		P	NO SOURCE
RBR57#13703%&	1,370,000	3/4	L, U	T, Q, A, B		P	NO SOURCE
	Resistance	Power	Terminal	Resistance	Level 1	Level 2	
Part Number	Value (Ohms)	Rating (W)	Characteristic (#)	Tolerance (%)	(FRL)(&)	(FRL)(&)	Manufacturer

RBR71 Wirewound Resistors

	Resistance	Power	Terminal	Resistance	Level 1	Level 2	
Part Number	Value (Ohms)	Rating (W)	Characteristic (#)	Tolerance (%)	(FRL)(&)	(FRL)(&)	Manufacturer
RBR71%10R00#&	10.00	1/8	L, U	T, Q, A, B	R	P	SHA, ULT
RBR71%10R10#&	10.10	1/8	L, U	T, Q, A, B	R	P	SHA, ULT
RBR71%10R20#&	10.20	1/8	L, U	T, Q, A, B	R	P	SHA, ULT
RBR71%10R40#&	10.40	1/8	L, U	T, Q, A, B	R	P	SHA, ULT
RBR71%10R50#&	10.50	1/8	L, U	T, Q, A, B	R	P	SHA, ULT
RBR71%10R60#&	10.60	1/8	L, U	T, Q, A, B	R	P	SHA, ULT
RBR71%10R70#&	10.70	1/8	L, U	T, Q, A, B	R	P	SHA, ULT
RBR71%10R90#&	10.90	1/8	L, U	T, Q, A, B	R	P	SHA, ULT
RBR71%11R00#&	11.00	1/8	L, U	T, Q, A, B	R	P	SHA, ULT
RBR71%11R10#&	11.10	1/8	L, U	T, Q, A, B	R	P	SHA, ULT
RBR71%11R30#&	11.30	1/8	L, U	T, Q, A, B	R	P	SHA, ULT
RBR71%11R40#&	11.40	1/8	L, U	T, Q, A, B	R	P	SHA, ULT

RBR71%11R50#&	11.50	1/8	L, U	T, Q, A, B	R	P	SHA, ULT
RBR71%11R70#&	11.70	1/8	L, U	T, Q, A, B	R	P	SHA, ULT
RBR71%11R80#&	11.80	1/8	L, U	T, Q, A, B	R	P	SHA, ULT
RBR71%12R00#&	12.00	1/8	L, U	T, Q, A, B	R	P	SHA, ULT
RBR71%12R10#&	12.10	1/8	L, U	T, Q, A, B	R	P	SHA, ULT
RBR71%12R30#&	12.30	1/8	L, U	T, Q, A, B	R	P	SHA, ULT
RBR71%12R40#&	12.40	1/8	L, U	T, Q, A, B	R	P	SHA, ULT
RBR71%12R60#&	12.60	1/8	L, U	T, Q, A, B	R	P	SHA, ULT
RBR71%12R70#&	12.70	1/8	L, U	T, Q, A, B	R	P	SHA, ULT
RBR71%12R90#&	12.90	1/8	L, U	T, Q, A, B	R	P	SHA, ULT
RBR71%13R00#&	13.00	1/8	L, U	T, Q, A, B	R	P	SHA, ULT
RBR71%13R20#&	13.20	1/8	L, U	T, Q, A, B	R	P	SHA, ULT
RBR71%13R30#&	13.30	1/8	L, U	T, Q, A, B	R	P	SHA, ULT
RBR71%13R50#&	13.50	1/8	L, U	T, Q, A, B	R	P	SHA, ULT
RBR71%13R70#&	13.70	1/8	L, U	T, Q, A, B	R	P	SHA, ULT
RBR71%13R80#&	13.80	1/8	L, U	T, Q, A, B	R	P	SHA, ULT
RBR71%14R00#&	14.00	1/8	L, U	T, Q, A, B	R	P	SHA, ULT
RBR71%14R20#&	14.20	1/8	L, U	T, Q, A, B	R	P	SHA, ULT
RBR71%14R30#&	14.30	1/8	L, U	T, Q, A, B	R	P	SHA, ULT
RBR71%14R50#&	14.50	1/8	L, U	T, Q, A, B	R	P	SHA, ULT
RBR71%14R70#&	14.70	1/8	L, U	T, Q, A, B	R	P	SHA, ULT
RBR71%14R90#&	14.90	1/8	L, U	T, Q, A, B	R	P	SHA, ULT
RBR71%15R00#&	15.00	1/8	L, U	T, Q, A, B	R	P	SHA, ULT
RBR71%15R20#&	15.20	1/8	L, U	T, Q, A, B	R	P	SHA, ULT
RBR71%15R40#&	15.40	1/8	L, U	T, Q, A, B	R	P	SHA, ULT
RBR71%15R60#&	15.60	1/8	L, U	T, Q, A, B	R	P	SHA, ULT
RBR71%15R80#&	15.80	1/8	L, U	T, Q, A, B	R	P	SHA, ULT
RBR71%16R00#&	16.00	1/8	L, U	T, Q, A, B	R	P	SHA, ULT
RBR71%16R20#&	16.20	1/8	L, U	T, Q, A, B	R	P	SHA, ULT
RBR71%16R40#&	16.40	1/8	L, U	T, Q, A, B	R	P	SHA, ULT
RBR71%16R50#&	16.50	1/8	L, U	T, Q, A, B	R	P	SHA, ULT
RBR71%16R70#&	16.70	1/8	L, U	T, Q, A, B	R	P	SHA, ULT
RBR71%16R90#&	16.90	1/8	L, U	T, Q, A, B	R	P	SHA, ULT
RBR71%17R20#&	17.20	1/8	L, U	T, Q, A, B	R	P	SHA, ULT
RBR71%17R40#&	17.40	1/8	L, U	T, Q, A, B	R	P	SHA, ULT
RBR71%17R60#&	17.60	1/8	L, U	T, Q, A, B	R	P	SHA, ULT
RBR71%17R80#&	17.80	1/8	L, U	T, Q, A, B	R	P	SHA, ULT
RBR71%18R00#&	18.00	1/8	L, U	T, Q, A, B	R	P	SHA, ULT
RBR71%18R20#&	18.20	1/8	L, U	T, Q, A, B	R	P	SHA, ULT
RBR71%18R40#&	18.40	1/8	L, U	T, Q, A, B	R	P	SHA, ULT
RBR71%18R70#&	18.70	1/8	L, U	T, Q, A, B	R	P	SHA, ULT
RBR71%18R90#&	18.90	1/8	L, U	T, Q, A, B	R	P	SHA, ULT
RBR71%19R10#&	19.10	1/8	L, U	T, Q, A, B	R	P	SHA, ULT
RBR71%19R30#&	19.30	1/8	L, U	T, Q, A, B	R	P	SHA, ULT
RBR71%19R60#&	19.60	1/8	L, U	T, Q, A, B	R	P	SHA, ULT
RBR71%19R80#&	19.80	1/8	L, U	T, Q, A, B	R	P	SHA, ULT
RBR71%20R00#&	20.00	1/8	L, U	T, Q, A, B	R	P	SHA, ULT

RBR71%20R30#&	20.30	1/8	L, U	T, Q, A, B	R	P	SHA, ULT
RBR71%20R50#&	20.50	1/8	L, U	T, Q, A, B	R	P	SHA, ULT
RBR71%20R80#&	20.80	1/8	L, U	T, Q, A, B	R	P	SHA, ULT
RBR71%21R00#&	21.00	1/8	L, U	T, Q, A, B	R	P	SHA, ULT
RBR71%21R30#&	21.30	1/8	L, U	T, Q, A, B	R	P	SHA, ULT
RBR71%21R50#&	21.50	1/8	L, U	T, Q, A, B	R	P	SHA, ULT
RBR71%21R80#&	21.80	1/8	L, U	T, Q, A, B	R	P	SHA, ULT
RBR71%22R10#&	22.10	1/8	L, U	T, Q, A, B	R	P	SHA, ULT
RBR71%22R30#&	22.30	1/8	L, U	T, Q, A, B	R	P	SHA, ULT
RBR71%22R60#&	22.60	1/8	L, U	T, Q, A, B	R	P	SHA, ULT
RBR71%22R90#&	22.90	1/8	L, U	T, Q, A, B	R	P	SHA, ULT
RBR71%23R20#&	23.20	1/8	L, U	T, Q, A, B	R	P	SHA, ULT
RBR71%23R40#&	23.40	1/8	L, U	T, Q, A, B	R	P	SHA, ULT
RBR71%23R70#&	23.70	1/8	L, U	T, Q, A, B	R	P	SHA, ULT
RBR71%24R00#&	24.00	1/8	L, U	T, Q, A, B	R	P	SHA, ULT
RBR71%24R30#&	24.30	1/8	L, U	T, Q, A, B	R	P	SHA, ULT
RBR71%24R60#&	24.60	1/8	L, U	T, Q, A, B	R	P	SHA, ULT
RBR71%24R90#&	24.90	1/8	L, U	T, Q, A, B	R	P	SHA, ULT
RBR71%25R20#&	25.20	1/8	L, U	T, Q, A, B	R	P	SHA, ULT
RBR71%25R50#&	25.50	1/8	L, U	T, Q, A, B	R	P	SHA, ULT
RBR71%25R80#&	25.80	1/8	L, U	T, Q, A, B	R	P	SHA, ULT
RBR71%26R10#&	26.10	1/8	L, U	T, Q, A, B	R	P	SHA, ULT
RBR71%26R40#&	26.40	1/8	L, U	T, Q, A, B	R	P	SHA, ULT
RBR71%26R70#&	26.70	1/8	L, U	T, Q, A, B	R	P	SHA, ULT
RBR71%27R10#&	27.10	1/8	L, U	T, Q, A, B	R	P	SHA, ULT
RBR71%27R40#&	27.40	1/8	L, U	T, Q, A, B	R	P	SHA, ULT
RBR71%27R70#&	27.70	1/8	L, U	T, Q, A, B	R	P	SHA, ULT
RBR71%28R00#&	28.00	1/8	L, U	T, Q, A, B	R	P	SHA, ULT
RBR71%28R40#&	28.40	1/8	L, U	T, Q, A, B	R	P	SHA, ULT
RBR71%28R70#&	28.70	1/8	L, U	T, Q, A, B	R	P	SHA, ULT
RBR71%29R10#&	29.10	1/8	L, U	T, Q, A, B	R	P	SHA, ULT
RBR71%29R40#&	29.40	1/8	L, U	T, Q, A, B	R	P	SHA, ULT
RBR71%29R80#&	29.80	1/8	L, U	T, Q, A, B	R	P	SHA, ULT
RBR71%30R10#&	30.10	1/8	L, U	T, Q, A, B	R	P	SHA, ULT
RBR71%30R50#&	30.50	1/8	L, U	T, Q, A, B	R	P	SHA, ULT
RBR71%30R90#&	30.90	1/8	L, U	T, Q, A, B	R	P	SHA, ULT
RBR71%31R20#&	31.20	1/8	L, U	T, Q, A, B	R	P	SHA, ULT
RBR71%31R60#&	31.60	1/8	L, U	T, Q, A, B	R	P	SHA, ULT
RBR71%32R00#&	32.00	1/8	L, U	T, Q, A, B	R	P	SHA, ULT
RBR71%32R40#&	32.40	1/8	L, U	T, Q, A, B	R	P	SHA, ULT
RBR71%32R80#&	32.80	1/8	L, U	T, Q, A, B	R	P	SHA, ULT
RBR71%33R20#&	33.20	1/8	L, U	T, Q, A, B	R	P	SHA, ULT
RBR71%33R60#&	33.60	1/8	L, U	T, Q, A, B	R	P	SHA, ULT
RBR71%34R00#&	34.00	1/8	L, U	T, Q, A, B	R	P	SHA, ULT
RBR71%34R40#&	34.40	1/8	L, U	T, Q, A, B	R	P	SHA, ULT
RBR71%34R80#&	34.80	1/8	L, U	T, Q, A, B	R	P	SHA, ULT
RBR71%35R20#&	35.20	1/8	L, U	T, Q, A, B	R	P	SHA, ULT

RBR71%35R70#&	35.70	1/8	L, U	T, Q, A, B	R	P	SHA, ULT
RBR71%36R10#&	36.10	1/8	L, U	T, Q, A, B	R	P	SHA, ULT
RBR71%36R50#&	36.50	1/8	L, U	T, Q, A, B	R	P	SHA, ULT
RBR71%37R00#&	37.00	1/8	L, U	T, Q, A, B	R	P	SHA, ULT
RBR71%37R40#&	37.40	1/8	L, U	T, Q, A, B	R	P	SHA, ULT
RBR71%37R90#&	37.90	1/8	L, U	T, Q, A, B	R	P	SHA, ULT
RBR71%38R30#&	38.30	1/8	L, U	T, Q, A, B	R	P	SHA, ULT
RBR71%38R80#&	38.80	1/8	L, U	T, Q, A, B	R	P	SHA, ULT
RBR71%39R20#&	39.20	1/8	L, U	T, Q, A, B	R	P	SHA, ULT
RBR71%39R70#&	39.70	1/8	L, U	T, Q, A, B	R	P	SHA, ULT
RBR71%40R20#&	40.20	1/8	L, U	T, Q, A, B	R	P	SHA, ULT
RBR71%40R70#&	40.70	1/8	L, U	T, Q, A, B	R	P	SHA, ULT
RBR71%41R20#&	41.20	1/8	L, U	T, Q, A, B	R	P	SHA, ULT
RBR71%41R70#&	41.70	1/8	L, U	T, Q, A, B	R	P	SHA, ULT
RBR71%42R20#&	42.20	1/8	L, U	T, Q, A, B	R	P	SHA, ULT
RBR71%42R70#&	42.70	1/8	L, U	T, Q, A, B	R	P	SHA, ULT
RBR71%43R20#&	43.20	1/8	L, U	T, Q, A, B	R	P	SHA, ULT
RBR71%43R70#&	43.70	1/8	L, U	T, Q, A, B	R	P	SHA, ULT
RBR71%44R20#&	44.20	1/8	L, U	T, Q, A, B	R	P	SHA, ULT
RBR71%44R80#&	44.80	1/8	L, U	T, Q, A, B	R	P	SHA, ULT
RBR71%45R30#&	45.30	1/8	L, U	T, Q, A, B	R	P	SHA, ULT
RBR71%45R90#&	45.90	1/8	L, U	T, Q, A, B	R	P	SHA, ULT
RBR71%46R40#&	46.40	1/8	L, U	T, Q, A, B	R	P	SHA, ULT
RBR71%47R00#&	47.00	1/8	L, U	T, Q, A, B	R	P	SHA, ULT
RBR71%47R50#&	47.50	1/8	L, U	T, Q, A, B	R	P	SHA, ULT
RBR71%48R10#&	48.10	1/8	L, U	T, Q, A, B	R	P	SHA, ULT
RBR71%48R70#&	48.70	1/8	L, U	T, Q, A, B	R	P	SHA, ULT
RBR71%49R30#&	49.30	1/8	L, U	T, Q, A, B	R	P	SHA, ULT
RBR71%49R90#&	49.90	1/8	L, U	T, Q, A, B	R	P	SHA, ULT
RBR71%50R50#&	50.50	1/8	L, U	T, Q, A, B	R	P	SHA, ULT
RBR71%51R10#&	51.10	1/8	L, U	T, Q, A, B	R	P	SHA, ULT
RBR71%51R70#&	51.70	1/8	L, U	T, Q, A, B	R	P	SHA, ULT
RBR71%52R30#&	52.30	1/8	L, U	T, Q, A, B	R	P	SHA, ULT
RBR71%53R00#&	53.00	1/8	L, U	T, Q, A, B	R	P	SHA, ULT
RBR71%53R60#&	53.60	1/8	L, U	T, Q, A, B	R	P	SHA, ULT
RBR71%54R20#&	54.20	1/8	L, U	T, Q, A, B	R	P	SHA, ULT
RBR71%54R90#&	54.90	1/8	L, U	T, Q, A, B	R	P	SHA, ULT
RBR71%55R60#&	55.60	1/8	L, U	T, Q, A, B	R	P	SHA, ULT
RBR71%56R20#&	56.20	1/8	L, U	T, Q, A, B	R	P	SHA, ULT
RBR71%56R90#&	56.90	1/8	L, U	T, Q, A, B	R	P	SHA, ULT
RBR71%57R60#&	57.60	1/8	L, U	T, Q, A, B	R	P	SHA, ULT
RBR71%58R30#&	58.30	1/8	L, U	T, Q, A, B	R	P	SHA, ULT
RBR71%59R00#&	59.00	1/8	L, U	T, Q, A, B	R	P	SHA, ULT
RBR71%59R70#&	59.70	1/8	L, U	T, Q, A, B	R	P	SHA, ULT
RBR71%60R40#&	60.40	1/8	L, U	T, Q, A, B	R	P	SHA, ULT
RBR71%61R20#&	61.20	1/8	L, U	T, Q, A, B	R	P	SHA, ULT
RBR71%61R90#&	61.90	1/8	L, U	T, Q, A, B	R	P	SHA, ULT

RBR71%62R60#&	62.60	1/8	L, U	T, Q, A, B	R	P	SHA, ULT
RBR71%63R40#&	63.40	1/8	L, U	T, Q, A, B	R	P	SHA, ULT
RBR71%64R20#&	64.20	1/8	L, U	T, Q, A, B	R	P	SHA, ULT
RBR71%64R90#&	64.90	1/8	L, U	T, Q, A, B	R	P	SHA, ULT
RBR71%65R70#&	65.70	1/8	L, U	T, Q, A, B	R	P	SHA, ULT
RBR71%66R50#&	66.50	1/8	L, U	T, Q, A, B	R	P	SHA, ULT
RBR71%67R30#&	67.30	1/8	L, U	T, Q, A, B	R	P	SHA, ULT
RBR71%68R10#&	68.10	1/8	L, U	T, Q, A, B	R	P	SHA, ULT
RBR71%69R00#&	69.00	1/8	L, U	T, Q, A, B	R	P	SHA, ULT
RBR71%69R80#&	69.80	1/8	L, U	T, Q, A, B	R	P	SHA, ULT
RBR71%70R60#&	70.60	1/8	L, U	T, Q, A, B	R	P	SHA, ULT
RBR71%71R50#&	71.50	1/8	L, U	T, Q, A, B	R	P	SHA, ULT
RBR71%72R30#&	72.30	1/8	L, U	T, Q, A, B	R	P	SHA, ULT
RBR71%73R20#&	73.20	1/8	L, U	T, Q, A, B	R	P	SHA, ULT
RBR71%74R10#&	74.10	1/8	L, U	T, Q, A, B	R	P	SHA, ULT
RBR71%75R00#&	75.00	1/8	L, U	T, Q, A, B	R	P	SHA, ULT
RBR71%75R90#&	75.90	1/8	L, U	T, Q, A, B	R	P	SHA, ULT
RBR71%76R80#&	76.80	1/8	L, U	T, Q, A, B	R	P	SHA, ULT
RBR71%77R70#&	77.70	1/8	L, U	T, Q, A, B	R	P	SHA, ULT
RBR71%78R70#&	78.70	1/8	L, U	T, Q, A, B	R	P	SHA, ULT
RBR71%79R60#&	79.60	1/8	L, U	T, Q, A, B	R	P	SHA, ULT
RBR71%80R60#&	80.60	1/8	L, U	T, Q, A, B	R	P	SHA, ULT
RBR71%81R60#&	81.60	1/8	L, U	T, Q, A, B	R	P	SHA, ULT
RBR71%82R50#&	82.50	1/8	L, U	T, Q, A, B	R	P	SHA, ULT
RBR71%83R50#&	83.50	1/8	L, U	T, Q, A, B	R	P	SHA, ULT
RBR71%84R50#&	84.50	1/8	L, U	T, Q, A, B	R	P	SHA, ULT
RBR71%85R60#&	85.60	1/8	L, U	T, Q, A, B	R	P	SHA, ULT
RBR71%86R60#&	86.60	1/8	L, U	T, Q, A, B	R	P	SHA, ULT
RBR71%87R60#&	87.60	1/8	L, U	T, Q, A, B	R	P	SHA, ULT
RBR71%88R70#&	88.70	1/8	L, U	T, Q, A, B	R	P	SHA, ULT
RBR71%89R80#&	89.80	1/8	L, U	T, Q, A, B	R	P	SHA, ULT
RBR71%90R90#&	90.90	1/8	L, U	T, Q, A, B	R	P	SHA, ULT
RBR71%92R00#&	92.00	1/8	L, U	T, Q, A, B	R	P	SHA, ULT
RBR71%93R10#&	93.10	1/8	L, U	T, Q, A, B	R	P	SHA, ULT
RBR71%94R20#&	94.20	1/8	L, U	T, Q, A, B	R	P	SHA, ULT
RBR71%95R30#&	95.30	1/8	L, U	T, Q, A, B	R	P	SHA, ULT
RBR71%96R50#&	96.50	1/8	L, U	T, Q, A, B	R	P	SHA, ULT
RBR71%97R60#&	97.60	1/8	L, U	T, Q, A, B	R	P	SHA, ULT
RBR71%98R80#&	98.80	1/8	L, U	T, Q, A, B	R	P	SHA, ULT
RBR71%100R0#&	100.0	1/8	L, U	T, Q, A, B	R	P	SHA, ULT, VIS
RBR71%101R0#&	101.0	1/8	L, U	T, Q, A, B	R	P	SHA, ULT, VIS
RBR71%102R0#&	102.0	1/8	L, U	T, Q, A, B	R	P	SHA, ULT, VIS
RBR71%104R0#&	104.0	1/8	L, U	T, Q, A, B	R	P	SHA, ULT, VIS
RBR71%105R0#&	105.0	1/8	L, U	T, Q, A, B	R	P	SHA, ULT, VIS
RBR71%106R0#&	106.0	1/8	L, U	T, Q, A, B	R	P	SHA, ULT, VIS
RBR71%107R0#&	107.0	1/8	L, U	T, Q, A, B	R	P	SHA, ULT, VIS
RBR71%109R0#&	109.0	1/8	L, U	T, Q, A, B	R	P	SHA, ULT, VIS

RBR71%110R0#&	110.0	1/8	L, U	T, Q, A, B	R	P	SHA, ULT, VIS
RBR71%111R0#&	111.0	1/8	L, U	T, Q, A, B	R	P	SHA, ULT, VIS
RBR71%113R0#&	113.0	1/8	L, U	T, Q, A, B	R	P	SHA, ULT, VIS
RBR71%114R0#&	114.0	1/8	L, U	T, Q, A, B	R	P	SHA, ULT, VIS
RBR71%115R0#&	115.0	1/8	L, U	T, Q, A, B	R	P	SHA, ULT, VIS
RBR71%117R0#&	117.0	1/8	L, U	T, Q, A, B	R	P	SHA, ULT, VIS
RBR71%118R0#&	118.0	1/8	L, U	T, Q, A, B	R	P	SHA, ULT, VIS
RBR71%120R0#&	120.0	1/8	L, U	T, Q, A, B	R	P	SHA, ULT, VIS
RBR71%121R0#&	121.0	1/8	L, U	T, Q, A, B	R	P	SHA, ULT, VIS
RBR71%123R0#&	123.0	1/8	L, U	T, Q, A, B	R	P	SHA, ULT, VIS
RBR71%124R0#&	124.0	1/8	L, U	T, Q, A, B	R	P	SHA, ULT, VIS
RBR71%126R0#&	126.0	1/8	L, U	T, Q, A, B	R	P	SHA, ULT, VIS
RBR71%127R0#&	127.0	1/8	L, U	T, Q, A, B	R	P	SHA, ULT, VIS
RBR71%129R0#&	129.0	1/8	L, U	T, Q, A, B	R	P	SHA, ULT, VIS
RBR71%130R0#&	130.0	1/8	L, U	T, Q, A, B	R	P	SHA, ULT, VIS
RBR71%132R0#&	132.0	1/8	L, U	T, Q, A, B	R	P	SHA, ULT, VIS
RBR71%133R0#&	133.0	1/8	L, U	T, Q, A, B	R	P	SHA, ULT, VIS
RBR71%135R0#&	135.0	1/8	L, U	T, Q, A, B	R	P	SHA, ULT, VIS
RBR71%137R0#&	137.0	1/8	L, U	T, Q, A, B	R	P	SHA, ULT, VIS
RBR71%138R0#&	138.0	1/8	L, U	T, Q, A, B	R	P	SHA, ULT, VIS
RBR71%140R0#&	140.0	1/8	L, U	T, Q, A, B	R	P	SHA, ULT, VIS
RBR71%142R0#&	142.0	1/8	L, U	T, Q, A, B	R	P	SHA, ULT, VIS
RBR71%143R0#&	143.0	1/8	L, U	T, Q, A, B	R	P	SHA, ULT, VIS
RBR71%145R0#&	145.0	1/8	L, U	T, Q, A, B	R	P	SHA, ULT, VIS
RBR71%147R0#&	147.0	1/8	L, U	T, Q, A, B	R	P	SHA, ULT, VIS
RBR71%149R0#&	149.0	1/8	L, U	T, Q, A, B	R	P	SHA, ULT, VIS
RBR71%150R0#&	150.0	1/8	L, U	T, Q, A, B	R	P	SHA, ULT, VIS
RBR71%152R0#&	152.0	1/8	L, U	T, Q, A, B	R	P	SHA, ULT, VIS
RBR71%154R0#&	154.0	1/8	L, U	T, Q, A, B	R	P	SHA, ULT, VIS
RBR71%156R0#&	156.0	1/8	L, U	T, Q, A, B	R	P	SHA, ULT, VIS
RBR71%158R0#&	158.0	1/8	L, U	T, Q, A, B	R	P	SHA, ULT, VIS
RBR71%160R0#&	160.0	1/8	L, U	T, Q, A, B	R	P	SHA, ULT, VIS
RBR71%162R0#&	162.0	1/8	L, U	T, Q, A, B	R	P	SHA, ULT, VIS
RBR71%164R0#&	164.0	1/8	L, U	T, Q, A, B	R	P	SHA, ULT, VIS
RBR71%165R0#&	165.0	1/8	L, U	T, Q, A, B	R	P	SHA, ULT, VIS
RBR71%167R0#&	167.0	1/8	L, U	T, Q, A, B	R	P	SHA, ULT, VIS
RBR71%169R0#&	169.0	1/8	L, U	T, Q, A, B	R	P	SHA, ULT, VIS
RBR71%172R0#&	172.0	1/8	L, U	T, Q, A, B	R	P	SHA, ULT, VIS
RBR71%174R0#&	174.0	1/8	L, U	T, Q, A, B	R	P	SHA, ULT, VIS
RBR71%176R0#&	176.0	1/8	L, U	T, Q, A, B	R	P	SHA, ULT, VIS
RBR71%178R0#&	178.0	1/8	L, U	T, Q, A, B	R	P	SHA, ULT, VIS
RBR71%180R0#&	180.0	1/8	L, U	T, Q, A, B	R	P	SHA, ULT, VIS
RBR71%182R0#&	182.0	1/8	L, U	T, Q, A, B	R	P	SHA, ULT, VIS
RBR71%184R0#&	184.0	1/8	L, U	T, Q, A, B	R	P	SHA, ULT, VIS
RBR71%187R0#&	187.0	1/8	L, U	T, Q, A, B	R	P	SHA, ULT, VIS
RBR71%189R0#&	189.0	1/8	L, U	T, Q, A, B	R	P	SHA, ULT, VIS
RBR71%191R0#&	191.0	1/8	L, U	T, Q, A, B	R	P	SHA, ULT, VIS

RBR71%193R0#&	193.0	1/8	L, U	T, Q, A, B	R	P	SHA, ULT, VIS
RBR71%196R0#&	196.0	1/8	L, U	T, Q, A, B	R	P	SHA, ULT, VIS
RBR71%198R0#&	198.0	1/8	L, U	T, Q, A, B	R	P	SHA, ULT, VIS
RBR71%200R0#&	200.0	1/8	L, U	T, Q, A, B	R	P	SHA, ULT, VIS
RBR71%203R0#&	203.0	1/8	L, U	T, Q, A, B	R	P	SHA, ULT, VIS
RBR71%205R0#&	205.0	1/8	L, U	T, Q, A, B	R	P	SHA, ULT, VIS
RBR71%208R0#&	208.0	1/8	L, U	T, Q, A, B	R	P	SHA, ULT, VIS
RBR71%210R0#&	210.0	1/8	L, U	T, Q, A, B	R	P	SHA, ULT, VIS
RBR71%213R0#&	213.0	1/8	L, U	T, Q, A, B	R	P	SHA, ULT, VIS
RBR71%215R0#&	215.0	1/8	L, U	T, Q, A, B	R	P	SHA, ULT, VIS
RBR71%218R0#&	218.0	1/8	L, U	T, Q, A, B	R	P	SHA, ULT, VIS
RBR71%221R0#&	221.0	1/8	L, U	T, Q, A, B	R	P	SHA, ULT, VIS
RBR71%223R0#&	223.0	1/8	L, U	T, Q, A, B	R	P	SHA, ULT, VIS
RBR71%226R0#&	226.0	1/8	L, U	T, Q, A, B	R	P	SHA, ULT, VIS
RBR71%229R0#&	229.0	1/8	L, U	T, Q, A, B	R	P	SHA, ULT, VIS
RBR71%232R0#&	232.0	1/8	L, U	T, Q, A, B	R	P	SHA, ULT, VIS
RBR71%234R0#&	234.0	1/8	L, U	T, Q, A, B	R	P	SHA, ULT, VIS
RBR71%237R0#&	237.0	1/8	L, U	T, Q, A, B	R	P	SHA, ULT, VIS
RBR71%240R0#&	240.0	1/8	L, U	T, Q, A, B	R	P	SHA, ULT, VIS
RBR71%243R0#&	243.0	1/8	L, U	T, Q, A, B	R	P	SHA, ULT, VIS
RBR71%246R0#&	246.0	1/8	L, U	T, Q, A, B	R	P	SHA, ULT, VIS
RBR71%249R0#&	249.0	1/8	L, U	T, Q, A, B	R	P	SHA, ULT, VIS
RBR71%252R0#&	252.0	1/8	L, U	T, Q, A, B	R	P	SHA, ULT, VIS
RBR71%255R0#&	255.0	1/8	L, U	T, Q, A, B	R	P	SHA, ULT, VIS
RBR71%258R0#&	258.0	1/8	L, U	T, Q, A, B	R	P	SHA, ULT, VIS
RBR71%261R0#&	261.0	1/8	L, U	T, Q, A, B	R	P	SHA, ULT, VIS
RBR71%264R0#&	264.0	1/8	L, U	T, Q, A, B	R	P	SHA, ULT, VIS
RBR71%267R0#&	267.0	1/8	L, U	T, Q, A, B	R	P	SHA, ULT, VIS
RBR71%271R0#&	271.0	1/8	L, U	T, Q, A, B	R	P	SHA, ULT, VIS
RBR71%274R0#&	274.0	1/8	L, U	T, Q, A, B	R	P	SHA, ULT, VIS
RBR71%277R0#&	277.0	1/8	L, U	T, Q, A, B	R	P	SHA, ULT, VIS
RBR71%280R0#&	280.0	1/8	L, U	T, Q, A, B	R	P	SHA, ULT, VIS
RBR71%284R0#&	284.0	1/8	L, U	T, Q, A, B	R	P	SHA, ULT, VIS
RBR71%287R0#&	287.0	1/8	L, U	T, Q, A, B	R	P	SHA, ULT, VIS
RBR71%291R0#&	291.0	1/8	L, U	T, Q, A, B	R	P	SHA, ULT, VIS
RBR71%294R0#&	294.0	1/8	L, U	T, Q, A, B	R	P	SHA, ULT, VIS
RBR71%298R0#&	298.0	1/8	L, U	T, Q, A, B	R	P	SHA, ULT, VIS
RBR71%301R0#&	301.0	1/8	L, U	T, Q, A, B	R	P	SHA, ULT, VIS
RBR71%305R0#&	305.0	1/8	L, U	T, Q, A, B	R	P	SHA, ULT, VIS
RBR71%309R0#&	309.0	1/8	L, U	T, Q, A, B	R	P	SHA, ULT, VIS
RBR71%312R0#&	312.0	1/8	L, U	T, Q, A, B	R	P	SHA, ULT, VIS
RBR71%316R0#&	316.0	1/8	L, U	T, Q, A, B	R	P	SHA, ULT, VIS
RBR71%320R0#&	320.0	1/8	L, U	T, Q, A, B	R	P	SHA, ULT, VIS
RBR71%324R0#&	324.0	1/8	L, U	T, Q, A, B	R	P	SHA, ULT, VIS
RBR71%328R0#&	328.0	1/8	L, U	T, Q, A, B	R	P	SHA, ULT, VIS
RBR71%332R0#&	332.0	1/8	L, U	T, Q, A, B	R	P	SHA, ULT, VIS
RBR71%336R0#&	336.0	1/8	L, U	T, Q, A, B	R	P	SHA, ULT, VIS

RBR71%340R0#&	340.0	1/8	L, U	T, Q, A, B	R	P	SHA, ULT, VIS
RBR71%344R0#&	344.0	1/8	L, U	T, Q, A, B	R	P	SHA, ULT, VIS
RBR71%348R0#&	348.0	1/8	L, U	T, Q, A, B	R	P	SHA, ULT, VIS
RBR71%352R0#&	352.0	1/8	L, U	T, Q, A, B	R	P	SHA, ULT, VIS
RBR71%357R0#&	357.0	1/8	L, U	T, Q, A, B	R	P	SHA, ULT, VIS
RBR71%361R0#&	361.0	1/8	L, U	T, Q, A, B	R	P	SHA, ULT, VIS
RBR71%365R0#&	365.0	1/8	L, U	T, Q, A, B	R	P	SHA, ULT, VIS
RBR71%370R0#&	370.0	1/8	L, U	T, Q, A, B	R	P	SHA, ULT, VIS
RBR71%374R0#&	374.0	1/8	L, U	T, Q, A, B	R	P	SHA, ULT, VIS
RBR71%379R0#&	379.0	1/8	L, U	T, Q, A, B	R	P	SHA, ULT, VIS
RBR71%383R0#&	383.0	1/8	L, U	T, Q, A, B	R	P	SHA, ULT, VIS
RBR71%388R0#&	388.0	1/8	L, U	T, Q, A, B	R	P	SHA, ULT, VIS
RBR71%392R0#&	392.0	1/8	L, U	T, Q, A, B	R	P	SHA, ULT, VIS
RBR71%397R0#&	397.0	1/8	L, U	T, Q, A, B	R	P	SHA, ULT, VIS
RBR71%402R0#&	402.0	1/8	L, U	T, Q, A, B	R	P	SHA, ULT, VIS
RBR71%407R0#&	407.0	1/8	L, U	T, Q, A, B	R	P	SHA, ULT, VIS
RBR71%412R0#&	412.0	1/8	L, U	T, Q, A, B	R	P	SHA, ULT, VIS
RBR71%417R0#&	417.0	1/8	L, U	T, Q, A, B	R	P	SHA, ULT, VIS
RBR71%422R0#&	422.0	1/8	L, U	T, Q, A, B	R	P	SHA, ULT, VIS
RBR71%427R0#&	427.0	1/8	L, U	T, Q, A, B	R	P	SHA, ULT, VIS
RBR71%432R0#&	432.0	1/8	L, U	T, Q, A, B	R	P	SHA, ULT, VIS
RBR71%437R0#&	437.0	1/8	L, U	T, Q, A, B	R	P	SHA, ULT, VIS
RBR71%442R0#&	442.0	1/8	L, U	T, Q, A, B	R	P	SHA, ULT, VIS
RBR71%448R0#&	448.0	1/8	L, U	T, Q, A, B	R	P	SHA, ULT, VIS
RBR71%453R0#&	453.0	1/8	L, U	T, Q, A, B	R	P	SHA, ULT, VIS
RBR71%459R0#&	459.0	1/8	L, U	T, Q, A, B	R	P	SHA, ULT, VIS
RBR71%464R0#&	464.0	1/8	L, U	T, Q, A, B	R	P	SHA, ULT, VIS
RBR71%470R0#&	470.0	1/8	L, U	T, Q, A, B	R	P	SHA, ULT, VIS
RBR71%475R0#&	475.0	1/8	L, U	T, Q, A, B	R	P	SHA, ULT, VIS
RBR71%481R0#&	481.0	1/8	L, U	T, Q, A, B	R	P	SHA, ULT, VIS
RBR71%487R0#&	487.0	1/8	L, U	T, Q, A, B	R	P	SHA, ULT, VIS
RBR71%493R0#&	493.0	1/8	L, U	T, Q, A, B	R	P	SHA, ULT, VIS
RBR71%499R0#&	499.0	1/8	L, U	T, Q, A, B	R	P	SHA, ULT, VIS
RBR71%505R0#&	505.0	1/8	L, U	T, Q, A, B	R	P	SHA, ULT, VIS
RBR71%511R0#&	511.0	1/8	L, U	T, Q, A, B	R	P	SHA, ULT, VIS
RBR71%517R0#&	517.0	1/8	L, U	T, Q, A, B	R	P	SHA, ULT, VIS
RBR71%523R0#&	523.0	1/8	L, U	T, Q, A, B	R	P	SHA, ULT, VIS
RBR71%530R0#&	530.0	1/8	L, U	T, Q, A, B	R	P	SHA, ULT, VIS
RBR71%536R0#&	536.0	1/8	L, U	T, Q, A, B	R	P	SHA, ULT, VIS
RBR71%542R0#&	542.0	1/8	L, U	T, Q, A, B	R	P	SHA, ULT, VIS
RBR71%549R0#&	549.0	1/8	L, U	T, Q, A, B	R	P	SHA, ULT, VIS
RBR71%556R0#&	556.0	1/8	L, U	T, Q, A, B	R	P	SHA, ULT, VIS
RBR71%562R0#&	562.0	1/8	L, U	T, Q, A, B	R	P	SHA, ULT, VIS
RBR71%569R0#&	569.0	1/8	L, U	T, Q, A, B	R	P	SHA, ULT, VIS
RBR71%576R0#&	576.0	1/8	L, U	T, Q, A, B	R	P	SHA, ULT, VIS
RBR71%583R0#&	583.0	1/8	L, U	T, Q, A, B	R	P	SHA, ULT, VIS
RBR71%590R0#&	590.0	1/8	L, U	T, Q, A, B	R	P	SHA, ULT, VIS

RBR71%597R0#&	597.0	1/8	L, U	T, Q, A, B	R	P	SHA, ULT, VIS
RBR71%604R0#&	604.0	1/8	L, U	T, Q, A, B	R	P	SHA, ULT, VIS
RBR71%612R0#&	612.0	1/8	L, U	T, Q, A, B	R	P	SHA, ULT, VIS
RBR71%619R0#&	619.0	1/8	L, U	T, Q, A, B	R	P	SHA, ULT, VIS
RBR71%626R0#&	626.0	1/8	L, U	T, Q, A, B	R	P	SHA, ULT, VIS
RBR71%634R0#&	634.0	1/8	L, U	T, Q, A, B	R	P	SHA, ULT, VIS
RBR71%642R0#&	642.0	1/8	L, U	T, Q, A, B	R	P	SHA, ULT, VIS
RBR71%649R0#&	649.0	1/8	L, U	T, Q, A, B	R	P	SHA, ULT, VIS
RBR71%657R0#&	657.0	1/8	L, U	T, Q, A, B	R	P	SHA, ULT, VIS
RBR71%665R0#&	665.0	1/8	L, U	T, Q, A, B	R	P	SHA, ULT, VIS
RBR71%673R0#&	673.0	1/8	L, U	T, Q, A, B	R	P	SHA, ULT, VIS
RBR71%681R0#&	681.0	1/8	L, U	T, Q, A, B	R	P	SHA, ULT, VIS
RBR71%690R0#&	690.0	1/8	L, U	T, Q, A, B	R	P	SHA, ULT, VIS
RBR71%698R0#&	698.0	1/8	L, U	T, Q, A, B	R	P	SHA, ULT, VIS
RBR71%706R0#&	706.0	1/8	L, U	T, Q, A, B	R	P	SHA, ULT, VIS
RBR71%715R0#&	715.0	1/8	L, U	T, Q, A, B	R	P	SHA, ULT, VIS
RBR71%723R0#&	723.0	1/8	L, U	T, Q, A, B	R	P	SHA, ULT, VIS
RBR71%732R0#&	732.0	1/8	L, U	T, Q, A, B	R	P	SHA, ULT, VIS
RBR71%741R0#&	741.0	1/8	L, U	T, Q, A, B	R	P	SHA, ULT, VIS
RBR71%750R0#&	750.0	1/8	L, U	T, Q, A, B	R	P	SHA, ULT, VIS
RBR71%759R0#&	759.0	1/8	L, U	T, Q, A, B	R	P	SHA, ULT, VIS
RBR71%768R0#&	768.0	1/8	L, U	T, Q, A, B	R	P	SHA, ULT, VIS
RBR71%777R0#&	777.0	1/8	L, U	T, Q, A, B	R	P	SHA, ULT, VIS
RBR71%787R0#&	787.0	1/8	L, U	T, Q, A, B	R	P	SHA, ULT, VIS
RBR71%796R0#&	796.0	1/8	L, U	T, Q, A, B	R	P	SHA, ULT, VIS
RBR71%806R0#&	806.0	1/8	L, U	T, Q, A, B	R	P	SHA, ULT, VIS
RBR71%816R0#&	816.0	1/8	L, U	T, Q, A, B	R	P	SHA, ULT, VIS
RBR71%825R0#&	825.0	1/8	L, U	T, Q, A, B	R	P	SHA, ULT, VIS
RBR71%835R0#&	835.0	1/8	L, U	T, Q, A, B	R	P	SHA, ULT, VIS
RBR71%845R0#&	845.0	1/8	L, U	T, Q, A, B	R	P	SHA, ULT, VIS
RBR71%856R0#&	856.0	1/8	L, U	T, Q, A, B	R	P	SHA, ULT, VIS
RBR71%866R0#&	866.0	1/8	L, U	T, Q, A, B	R	P	SHA, ULT, VIS
RBR71%876R0#&	876.0	1/8	L, U	T, Q, A, B	R	P	SHA, ULT, VIS
RBR71%887R0#&	887.0	1/8	L, U	T, Q, A, B	R	P	SHA, ULT, VIS
RBR71%898R0#&	898.0	1/8	L, U	T, Q, A, B	R	P	SHA, ULT, VIS
RBR71%909R0#&	909.0	1/8	L, U	T, Q, A, B	R	P	SHA, ULT, VIS
RBR71%920R0#&	920.0	1/8	L, U	T, Q, A, B	R	P	SHA, ULT, VIS
RBR71%931R0#&	931.0	1/8	L, U	T, Q, A, B	R	P	SHA, ULT, VIS
RBR71%942R0#&	942.0	1/8	L, U	T, Q, A, B	R	P	SHA, ULT, VIS
RBR71%953R0#&	953.0	1/8	L, U	T, Q, A, B	R	P	SHA, ULT, VIS
RBR71%965R0#&	965.0	1/8	L, U	T, Q, A, B	R	P	SHA, ULT, VIS
RBR71%976R0#&	976.0	1/8	L, U	T, Q, A, B	R	P	SHA, ULT, VIS
RBR71%988R0#&	988.0	1/8	L, U	T, Q, A, B	R	P	SHA, ULT, VIS
RBR71%10000#&	1,000	1/8	L, U	T, Q, A, B	R	P	SHA, ULT, VIS
RBR71%10100#&	1,010	1/8	L, U	T, Q, A, B	R	P	SHA, ULT, VIS
RBR71%10200#&	1,020	1/8	L, U	T, Q, A, B	R	P	SHA, ULT, VIS
RBR71%10400#&	1,040	1/8	L, U	T, Q, A, B	R	P	SHA, ULT, VIS

RBR71%10500#&	1,050	1/8	L, U	T, Q, A, B	R	P	SHA, ULT, VIS
RBR71%10600#&	1,060	1/8	L, U	T, Q, A, B	R	P	SHA, ULT, VIS
RBR71%10700#&	1,070	1/8	L, U	T, Q, A, B	R	P	SHA, ULT, VIS
RBR71%10900#&	1,090	1/8	L, U	T, Q, A, B	R	P	SHA, ULT, VIS
RBR71%11000#&	1,100	1/8	L, U	T, Q, A, B	R	P	SHA, ULT, VIS
RBR71%11100#&	1,110	1/8	L, U	T, Q, A, B	R	P	SHA, ULT, VIS
RBR71%11300#&	1,130	1/8	L, U	T, Q, A, B	R	P	SHA, ULT, VIS
RBR71%11400#&	1,140	1/8	L, U	T, Q, A, B	R	P	SHA, ULT, VIS
RBR71%11500#&	1,150	1/8	L, U	T, Q, A, B	R	P	SHA, ULT, VIS
RBR71%11700#&	1,170	1/8	L, U	T, Q, A, B	R	P	SHA, ULT, VIS
RBR71%11800#&	1,180	1/8	L, U	T, Q, A, B	R	P	SHA, ULT, VIS
RBR71%12000#&	1,200	1/8	L, U	T, Q, A, B	R	P	SHA, ULT, VIS
RBR71%12100#&	1,210	1/8	L, U	T, Q, A, B	R	P	SHA, ULT, VIS
RBR71%12300#&	1,230	1/8	L, U	T, Q, A, B	R	P	SHA, ULT, VIS
RBR71%12400#&	1,240	1/8	L, U	T, Q, A, B	R	P	SHA, ULT, VIS
RBR71%12600#&	1,260	1/8	L, U	T, Q, A, B	R	P	SHA, ULT, VIS
RBR71%12700#&	1,270	1/8	L, U	T, Q, A, B	R	P	SHA, ULT, VIS
RBR71%12900#&	1,290	1/8	L, U	T, Q, A, B	R	P	SHA, ULT, VIS
RBR71%13000#&	1,300	1/8	L, U	T, Q, A, B	R	P	SHA, ULT, VIS
RBR71%13200#&	1,320	1/8	L, U	T, Q, A, B	R	P	SHA, ULT, VIS
RBR71%13300#&	1,330	1/8	L, U	T, Q, A, B	R	P	SHA, ULT, VIS
RBR71%13500#&	1,350	1/8	L, U	T, Q, A, B	R	P	SHA, ULT, VIS
RBR71%13700#&	1,370	1/8	L, U	T, Q, A, B	R	P	SHA, ULT, VIS
RBR71%13800#&	1,380	1/8	L, U	T, Q, A, B	R	P	SHA, ULT, VIS
RBR71%14000#&	1,400	1/8	L, U	T, Q, A, B	R	P	SHA, ULT, VIS
RBR71%14200#&	1,420	1/8	L, U	T, Q, A, B	R	P	SHA, ULT, VIS
RBR71%14300#&	1,430	1/8	L, U	T, Q, A, B	R	P	SHA, ULT, VIS
RBR71%14500#&	1,450	1/8	L, U	T, Q, A, B	R	P	SHA, ULT, VIS
RBR71%14700#&	1,470	1/8	L, U	T, Q, A, B	R	P	SHA, ULT, VIS
RBR71%14900#&	1,490	1/8	L, U	T, Q, A, B	R	P	SHA, ULT, VIS
RBR71%15000#&	1,500	1/8	L, U	T, Q, A, B	R	P	SHA, ULT, VIS
RBR71%15200#&	1,520	1/8	L, U	T, Q, A, B	R	P	SHA, ULT, VIS
RBR71%15400#&	1,540	1/8	L, U	T, Q, A, B	R	P	SHA, ULT, VIS
RBR71%15600#&	1,560	1/8	L, U	T, Q, A, B	R	P	SHA, ULT, VIS
RBR71%15800#&	1,580	1/8	L, U	T, Q, A, B	R	P	SHA, ULT, VIS
RBR71%16000#&	1,600	1/8	L, U	T, Q, A, B	R	P	SHA, ULT, VIS
RBR71%16200#&	1,620	1/8	L, U	T, Q, A, B	R	P	SHA, ULT, VIS
RBR71%16400#&	1,640	1/8	L, U	T, Q, A, B	R	P	SHA, ULT, VIS
RBR71%16500#&	1,650	1/8	L, U	T, Q, A, B	R	P	SHA, ULT, VIS
RBR71%16700#&	1,670	1/8	L, U	T, Q, A, B	R	P	SHA, ULT, VIS
RBR71%16900#&	1,690	1/8	L, U	T, Q, A, B	R	P	SHA, ULT, VIS
RBR71%17200#&	1,720	1/8	L, U	T, Q, A, B	R	P	SHA, ULT, VIS
RBR71%17400#&	1,740	1/8	L, U	T, Q, A, B	R	P	SHA, ULT, VIS
RBR71%17600#&	1,760	1/8	L, U	T, Q, A, B	R	P	SHA, ULT, VIS
RBR71%17800#&	1,780	1/8	L, U	T, Q, A, B	R	P	SHA, ULT, VIS
RBR71%18000#&	1,800	1/8	L, U	T, Q, A, B	R	P	SHA, ULT, VIS
RBR71%18200#&	1,820	1/8	L, U	T, Q, A, B	R	P	SHA, ULT, VIS

RBR71%18400#&	1,840	1/8	L, U	T, Q, A, B	R	P	SHA, ULT, VIS
RBR71%18700#&	1,870	1/8	L, U	T, Q, A, B	R	P	SHA, ULT, VIS
RBR71%18900#&	1,890	1/8	L, U	T, Q, A, B	R	P	SHA, ULT, VIS
RBR71%19100#&	1,910	1/8	L, U	T, Q, A, B	R	P	SHA, ULT, VIS
RBR71%19300#&	1,930	1/8	L, U	T, Q, A, B	R	P	SHA, ULT, VIS
RBR71%19600#&	1,960	1/8	L, U	T, Q, A, B	R	P	SHA, ULT, VIS
RBR71%19800#&	1,980	1/8	L, U	T, Q, A, B	R	P	SHA, ULT, VIS
RBR71%20000#&	2,000	1/8	L, U	T, Q, A, B	R	P	SHA, ULT, VIS
RBR71%20300#&	2,030	1/8	L, U	T, Q, A, B	R	P	SHA, ULT, VIS
RBR71%20500#&	2,050	1/8	L, U	T, Q, A, B	R	P	SHA, ULT, VIS
RBR71%20800#&	2,080	1/8	L, U	T, Q, A, B	R	P	SHA, ULT, VIS
RBR71%21000#&	2,100	1/8	L, U	T, Q, A, B	R	P	SHA, ULT, VIS
RBR71%21300#&	2,130	1/8	L, U	T, Q, A, B	R	P	SHA, ULT, VIS
RBR71%21500#&	2,150	1/8	L, U	T, Q, A, B	R	P	SHA, ULT, VIS
RBR71%21800#&	2,180	1/8	L, U	T, Q, A, B	R	P	SHA, ULT, VIS
RBR71%22100#&	2,210	1/8	L, U	T, Q, A, B	R	P	SHA, ULT, VIS
RBR71%22300#&	2,230	1/8	L, U	T, Q, A, B	R	P	SHA, ULT, VIS
RBR71%22600#&	2,260	1/8	L, U	T, Q, A, B	R	P	SHA, ULT, VIS
RBR71%22900#&	2,290	1/8	L, U	T, Q, A, B	R	P	SHA, ULT, VIS
RBR71%23200#&	2,320	1/8	L, U	T, Q, A, B	R	P	SHA, ULT, VIS
RBR71%23400#&	2,340	1/8	L, U	T, Q, A, B	R	P	SHA, ULT, VIS
RBR71%23700#&	2,370	1/8	L, U	T, Q, A, B	R	P	SHA, ULT, VIS
RBR71%24000#&	2,400	1/8	L, U	T, Q, A, B	R	P	SHA, ULT, VIS
RBR71%24300#&	2,430	1/8	L, U	T, Q, A, B	R	P	SHA, ULT, VIS
RBR71%24600#&	2,460	1/8	L, U	T, Q, A, B	R	P	SHA, ULT, VIS
RBR71%24900#&	2,490	1/8	L, U	T, Q, A, B	R	P	SHA, ULT, VIS
RBR71%25200#&	2,520	1/8	L, U	T, Q, A, B	R	P	SHA, ULT, VIS
RBR71%25500#&	2,550	1/8	L, U	T, Q, A, B	R	P	SHA, ULT, VIS
RBR71%25800#&	2,580	1/8	L, U	T, Q, A, B	R	P	SHA, ULT, VIS
RBR71%26100#&	2,610	1/8	L, U	T, Q, A, B	R	P	SHA, ULT, VIS
RBR71%26400#&	2,640	1/8	L, U	T, Q, A, B	R	P	SHA, ULT, VIS
RBR71%26700#&	2,670	1/8	L, U	T, Q, A, B	R	P	SHA, ULT, VIS
RBR71%27100#&	2,710	1/8	L, U	T, Q, A, B	R	P	SHA, ULT, VIS
RBR71%27400#&	2,740	1/8	L, U	T, Q, A, B	R	P	SHA, ULT, VIS
RBR71%27700#&	2,770	1/8	L, U	T, Q, A, B	R	P	SHA, ULT, VIS
RBR71%28000#&	2,800	1/8	L, U	T, Q, A, B	R	P	SHA, ULT, VIS
RBR71%28400#&	2,840	1/8	L, U	T, Q, A, B	R	P	SHA, ULT, VIS
RBR71%28700#&	2,870	1/8	L, U	T, Q, A, B	R	P	SHA, ULT, VIS
RBR71%29100#&	2,910	1/8	L, U	T, Q, A, B	R	P	SHA, ULT, VIS
RBR71%29400#&	2,940	1/8	L, U	T, Q, A, B	R	P	SHA, ULT, VIS
RBR71%29800#&	2,980	1/8	L, U	T, Q, A, B	R	P	SHA, ULT, VIS
RBR71%30100#&	3,010	1/8	L, U	T, Q, A, B	R	P	SHA, ULT, VIS
RBR71%30500#&	3,050	1/8	L, U	T, Q, A, B	R	P	SHA, ULT, VIS
RBR71%30900#&	3,090	1/8	L, U	T, Q, A, B	R	P	SHA, ULT, VIS
RBR71%31200#&	3,120	1/8	L, U	T, Q, A, B	R	P	SHA, ULT, VIS
RBR71%31600#&	3,160	1/8	L, U	T, Q, A, B	R	P	SHA, ULT, VIS
RBR71%32000#&	3,200	1/8	L, U	T, Q, A, B	R	P	SHA, ULT, VIS

RBR71%32400#&	3,240	1/8	L, U	T, Q, A, B	R	P	SHA, ULT, VIS
RBR71%32800#&	3,280	1/8	L, U	T, Q, A, B	R	P	SHA, ULT, VIS
RBR71%33200#&	3,320	1/8	L, U	T, Q, A, B	R	P	SHA, ULT, VIS
RBR71%33600#&	3,360	1/8	L, U	T, Q, A, B	R	P	SHA, ULT, VIS
RBR71%34000#&	3,400	1/8	L, U	T, Q, A, B	R	P	SHA, ULT, VIS
RBR71%34400#&	3,440	1/8	L, U	T, Q, A, B	R	P	SHA, ULT, VIS
RBR71%34800#&	3,480	1/8	L, U	T, Q, A, B	R	P	SHA, ULT, VIS
RBR71%35200#&	3,520	1/8	L, U	T, Q, A, B	R	P	SHA, ULT, VIS
RBR71%35700#&	3,570	1/8	L, U	T, Q, A, B	R	P	SHA, ULT, VIS
RBR71%36100#&	3,610	1/8	L, U	T, Q, A, B	R	P	SHA, ULT, VIS
RBR71%36500#&	3,650	1/8	L, U	T, Q, A, B	R	P	SHA, ULT, VIS
RBR71%37000#&	3,700	1/8	L, U	T, Q, A, B	R	P	SHA, ULT, VIS
RBR71%37400#&	3,740	1/8	L, U	T, Q, A, B	R	P	SHA, ULT, VIS
RBR71%37900#&	3,790	1/8	L, U	T, Q, A, B	R	P	SHA, ULT, VIS
RBR71%38300#&	3,830	1/8	L, U	T, Q, A, B	R	P	SHA, ULT, VIS
RBR71%38800#&	3,880	1/8	L, U	T, Q, A, B	R	P	SHA, ULT, VIS
RBR71%39200#&	3,920	1/8	L, U	T, Q, A, B	R	P	SHA, ULT, VIS
RBR71%39700#&	3,970	1/8	L, U	T, Q, A, B	R	P	SHA, ULT, VIS
RBR71%40200#&	4,020	1/8	L, U	T, Q, A, B	R	P	SHA, ULT, VIS
RBR71%40700#&	4,070	1/8	L, U	T, Q, A, B	R	P	SHA, ULT, VIS
RBR71%41200#&	4,120	1/8	L, U	T, Q, A, B	R	P	SHA, ULT, VIS
RBR71%41700#&	4,170	1/8	L, U	T, Q, A, B	R	P	SHA, ULT, VIS
RBR71%42200#&	4,220	1/8	L, U	T, Q, A, B	R	P	SHA, ULT, VIS
RBR71%42700#&	4,270	1/8	L, U	T, Q, A, B	R	P	SHA, ULT, VIS
RBR71%43200#&	4,320	1/8	L, U	T, Q, A, B	R	P	SHA, ULT, VIS
RBR71%43700#&	4,370	1/8	L, U	T, Q, A, B	R	P	SHA, ULT, VIS
RBR71%44200#&	4,420	1/8	L, U	T, Q, A, B	R	P	SHA, ULT, VIS
RBR71%44800#&	4,480	1/8	L, U	T, Q, A, B	R	P	SHA, ULT, VIS
RBR71%45300#&	4,530	1/8	L, U	T, Q, A, B	R	P	SHA, ULT, VIS
RBR71%45900#&	4,590	1/8	L, U	T, Q, A, B	R	P	SHA, ULT, VIS
RBR71%46400#&	4,640	1/8	L, U	T, Q, A, B	R	P	SHA, ULT, VIS
RBR71%47000#&	4,700	1/8	L, U	T, Q, A, B	R	P	SHA, ULT, VIS
RBR71%47500#&	4,750	1/8	L, U	T, Q, A, B	R	P	SHA, ULT, VIS
RBR71%48100#&	4,810	1/8	L, U	T, Q, A, B	R	P	SHA, ULT, VIS
RBR71%48700#&	4,870	1/8	L, U	T, Q, A, B	R	P	SHA, ULT, VIS
RBR71%49300#&	4,930	1/8	L, U	T, Q, A, B	R	P	SHA, ULT, VIS
RBR71%49900#&	4,990	1/8	L, U	T, Q, A, B	R	P	SHA, ULT, VIS
RBR71%50500#&	5,050	1/8	L, U	T, Q, A, B	R	P	SHA, ULT, VIS
RBR71%51100#&	5,110	1/8	L, U	T, Q, A, B	R	P	SHA, ULT, VIS
RBR71%51700#&	5,170	1/8	L, U	T, Q, A, B	R	P	SHA, ULT, VIS
RBR71%52300#&	5,230	1/8	L, U	T, Q, A, B	R	P	SHA, ULT, VIS
RBR71%53000#&	5,300	1/8	L, U	T, Q, A, B	R	P	SHA, ULT, VIS
RBR71%53600#&	5,360	1/8	L, U	T, Q, A, B	R	P	SHA, ULT, VIS
RBR71%54200#&	5,420	1/8	L, U	T, Q, A, B	R	P	SHA, ULT, VIS
RBR71%54900#&	5,490	1/8	L, U	T, Q, A, B	R	P	SHA, ULT, VIS
RBR71%55600#&	5,560	1/8	L, U	T, Q, A, B	R	P	SHA, ULT, VIS
RBR71%56200#&	5,620	1/8	L, U	T, Q, A, B	R	P	SHA, ULT, VIS

RBR71%56900#&	5,690	1/8	L, U	T, Q, A, B	R	P	SHA, ULT, VIS
RBR71%57600#&	5,760	1/8	L, U	T, Q, A, B	R	P	SHA, ULT, VIS
RBR71%58300#&	5,830	1/8	L, U	T, Q, A, B	R	P	SHA, ULT, VIS
RBR71%59000#&	5,900	1/8	L, U	T, Q, A, B	R	P	SHA, ULT, VIS
RBR71%59700#&	5,970	1/8	L, U	T, Q, A, B	R	P	SHA, ULT, VIS
RBR71%60400#&	6,040	1/8	L, U	T, Q, A, B	R	P	SHA, ULT, VIS
RBR71%61200#&	6,120	1/8	L, U	T, Q, A, B	R	P	SHA, ULT, VIS
RBR71%61900#&	6,190	1/8	L, U	T, Q, A, B	R	P	SHA, ULT, VIS
RBR71%62600#&	6,260	1/8	L, U	T, Q, A, B	R	P	SHA, ULT, VIS
RBR71%63400#&	6,340	1/8	L, U	T, Q, A, B	R	P	SHA, ULT, VIS
RBR71%64200#&	6,420	1/8	L, U	T, Q, A, B	R	P	SHA, ULT, VIS
RBR71%64900#&	6,490	1/8	L, U	T, Q, A, B	R	P	SHA, ULT, VIS
RBR71%65700#&	6,570	1/8	L, U	T, Q, A, B	R	P	SHA, ULT, VIS
RBR71%66500#&	6,650	1/8	L, U	T, Q, A, B	R	P	SHA, ULT, VIS
RBR71%67300#&	6,730	1/8	L, U	T, Q, A, B	R	P	SHA, ULT, VIS
RBR71%68100#&	6,810	1/8	L, U	T, Q, A, B	R	P	SHA, ULT, VIS
RBR71%69000#&	6,900	1/8	L, U	T, Q, A, B	R	P	SHA, ULT, VIS
RBR71%69800#&	6,980	1/8	L, U	T, Q, A, B	R	P	SHA, ULT, VIS
RBR71%70600#&	7,060	1/8	L, U	T, Q, A, B	R	P	SHA, ULT, VIS
RBR71%71500#&	7,150	1/8	L, U	T, Q, A, B	R	P	SHA, ULT, VIS
RBR71%72300#&	7,230	1/8	L, U	T, Q, A, B	R	P	SHA, ULT, VIS
RBR71%73200#&	7,320	1/8	L, U	T, Q, A, B	R	P	SHA, ULT, VIS
RBR71%74100#&	7,410	1/8	L, U	T, Q, A, B	R	P	SHA, ULT, VIS
RBR71%75000#&	7,500	1/8	L, U	T, Q, A, B	R	P	SHA, ULT, VIS
RBR71%75900#&	7,590	1/8	L, U	T, Q, A, B	R	P	SHA, ULT, VIS
RBR71%76800#&	7,680	1/8	L, U	T, Q, A, B	R	P	SHA, ULT, VIS
RBR71%77700#&	7,770	1/8	L, U	T, Q, A, B	R	P	SHA, ULT, VIS
RBR71%78700#&	7,870	1/8	L, U	T, Q, A, B	R	P	SHA, ULT, VIS
RBR71%79600#&	7,960	1/8	L, U	T, Q, A, B	R	P	SHA, ULT, VIS
RBR71%80600#&	8,060	1/8	L, U	T, Q, A, B	R	P	SHA, ULT, VIS
RBR71%81600#&	8,160	1/8	L, U	T, Q, A, B	R	P	SHA, ULT, VIS
RBR71%82500#&	8,250	1/8	L, U	T, Q, A, B	R	P	SHA, ULT, VIS
RBR71%83500#&	8,350	1/8	L, U	T, Q, A, B	R	P	SHA, ULT, VIS
RBR71%84500#&	8,450	1/8	L, U	T, Q, A, B	R	P	SHA, ULT, VIS
RBR71%85600#&	8,560	1/8	L, U	T, Q, A, B	R	P	SHA, ULT, VIS
RBR71%86600#&	8,660	1/8	L, U	T, Q, A, B	R	P	SHA, ULT, VIS
RBR71%87600#&	8,760	1/8	L, U	T, Q, A, B	R	P	SHA, ULT, VIS
RBR71%88700#&	8,870	1/8	L, U	T, Q, A, B	R	P	SHA, ULT, VIS
RBR71%89800#&	8,980	1/8	L, U	T, Q, A, B	R	P	SHA, ULT, VIS
RBR71%90900#&	9,090	1/8	L, U	T, Q, A, B	R	P	SHA, ULT, VIS
RBR71%92000#&	9,190	1/8	L, U	T, Q, A, B	R	P	SHA, ULT, VIS
RBR71%93100#&	9,310	1/8	L, U	T, Q, A, B	R	P	SHA, ULT, VIS
RBR71%94200#&	9,420	1/8	L, U	T, Q, A, B	R	P	SHA, ULT, VIS
RBR71%95300#&	9,530	1/8	L, U	T, Q, A, B	R	P	SHA, ULT, VIS
RBR71%96500#&	9,650	1/8	L, U	T, Q, A, B	R	P	SHA, ULT, VIS
RBR71%97600#&	9,760	1/8	L, U	T, Q, A, B	R	P	SHA, ULT, VIS
RBR71%98800#&	9,880	1/8	L, U	T, Q, A, B	R	P	SHA, ULT, VIS

RBR71%10001#&	10,000	1/8	L, U	T, Q, A, B	R	P	SHA, ULT, VIS
RBR71%10101#&	10,100	1/8	L, U	T, Q, A, B	R	P	SHA, ULT, VIS
RBR71%10201#&	10,200	1/8	L, U	T, Q, A, B	R	P	SHA, ULT, VIS
RBR71%10401#&	10,400	1/8	L, U	T, Q, A, B	R	P	SHA, ULT, VIS
RBR71%10501#&	10,500	1/8	L, U	T, Q, A, B	R	P	SHA, ULT, VIS
RBR71%10601#&	10,600	1/8	L, U	T, Q, A, B	R	P	SHA, ULT, VIS
RBR71%10701#&	10,700	1/8	L, U	T, Q, A, B	R	P	SHA, ULT, VIS
RBR71%10901#&	10,900	1/8	L, U	T, Q, A, B	R	P	SHA, ULT, VIS
RBR71%11001#&	11,000	1/8	L, U	T, Q, A, B	R	P	SHA, ULT, VIS
RBR71%11101#&	11,100	1/8	L, U	T, Q, A, B	R	P	SHA, ULT, VIS
RBR71%11301#&	11,300	1/8	L, U	T, Q, A, B	R	P	SHA, ULT, VIS
RBR71%11401#&	11,400	1/8	L, U	T, Q, A, B	R	P	SHA, ULT, VIS
RBR71%11501#&	11,500	1/8	L, U	T, Q, A, B	R	P	SHA, ULT, VIS
RBR71%11701#&	11,700	1/8	L, U	T, Q, A, B	R	P	SHA, ULT, VIS
RBR71%11801#&	11,800	1/8	L, U	T, Q, A, B	R	P	SHA, ULT, VIS
RBR71%12001#&	12,000	1/8	L, U	T, Q, A, B	R	P	SHA, ULT, VIS
RBR71%12101#&	12,100	1/8	L, U	T, Q, A, B	R	P	SHA, ULT, VIS
RBR71%12301#&	12,300	1/8	L, U	T, Q, A, B	R	P	SHA, ULT, VIS
RBR71%12401#&	12,400	1/8	L, U	T, Q, A, B	R	P	SHA, ULT, VIS
RBR71%12601#&	12,600	1/8	L, U	T, Q, A, B	R	P	SHA, ULT, VIS
RBR71%12701#&	12,700	1/8	L, U	T, Q, A, B	R	P	SHA, ULT, VIS
RBR71%12901#&	12,900	1/8	L, U	T, Q, A, B	R	P	SHA, ULT, VIS
RBR71%13001#&	13,000	1/8	L, U	T, Q, A, B	R	P	SHA, ULT, VIS
RBR71%13201#&	13,200	1/8	L, U	T, Q, A, B	R	P	SHA, ULT, VIS
RBR71%13301#&	13,300	1/8	L, U	T, Q, A, B	R	P	SHA, ULT, VIS
RBR71%13501#&	13,500	1/8	L, U	T, Q, A, B	R	P	SHA, ULT, VIS
RBR71%13701#&	13,700	1/8	L, U	T, Q, A, B	R	P	SHA, ULT, VIS
RBR71%13801#&	13,800	1/8	L, U	T, Q, A, B	R	P	SHA, ULT, VIS
RBR71%14001#&	14,000	1/8	L, U	T, Q, A, B	R	P	SHA, ULT, VIS
RBR71%14201#&	14,200	1/8	L, U	T, Q, A, B	R	P	SHA, ULT, VIS
RBR71%14301#&	14,300	1/8	L, U	T, Q, A, B	R	P	SHA, ULT, VIS
RBR71%14501#&	14,500	1/8	L, U	T, Q, A, B	R	P	SHA, ULT, VIS
RBR71%14701#&	14,700	1/8	L, U	T, Q, A, B	R	P	SHA, ULT, VIS
RBR71%14901#&	14,900	1/8	L, U	T, Q, A, B	R	P	SHA, ULT, VIS
RBR71%15001#&	15,000	1/8	L, U	T, Q, A, B	R	P	SHA, ULT, VIS
RBR71%15201#&	15,200	1/8	L, U	T, Q, A, B	R	P	SHA, ULT, VIS
RBR71%15401#&	15,400	1/8	L, U	T, Q, A, B	R	P	SHA, ULT, VIS
RBR71%15601#&	15,600	1/8	L, U	T, Q, A, B	R	P	SHA, ULT, VIS
RBR71%15801#&	15,800	1/8	L, U	T, Q, A, B	R	P	SHA, ULT, VIS
RBR71%16001#&	16,000	1/8	L, U	T, Q, A, B	R	P	SHA, ULT, VIS
RBR71%16201#&	16,200	1/8	L, U	T, Q, A, B	R	P	SHA, ULT, VIS
RBR71%16401#&	16,400	1/8	L, U	T, Q, A, B	R	P	SHA, ULT, VIS
RBR71%16501#&	16,500	1/8	L, U	T, Q, A, B	R	P	SHA, ULT, VIS
RBR71%16701#&	16,700	1/8	L, U	T, Q, A, B	R	P	SHA, ULT, VIS
RBR71%16901#&	16,900	1/8	L, U	T, Q, A, B	R	P	SHA, ULT, VIS
RBR71%17201#&	17,200	1/8	L, U	T, Q, A, B	R	P	SHA, ULT, VIS
RBR71%17401#&	17,400	1/8	L, U	T, Q, A, B	R	P	SHA, ULT, VIS

RBR71%17601#&	17,600	1/8	L, U	T, Q, A, B	R	P	SHA, ULT, VIS
RBR71%17801#&	17,800	1/8	L, U	T, Q, A, B	R	P	SHA, ULT, VIS
RBR71%18001#&	18,000	1/8	L, U	T, Q, A, B	R	P	SHA, ULT, VIS
RBR71%18201#&	18,200	1/8	L, U	T, Q, A, B	R	P	SHA, ULT, VIS
RBR71%18401#&	18,400	1/8	L, U	T, Q, A, B	R	P	SHA, ULT, VIS
RBR71%18701#&	18,700	1/8	L, U	T, Q, A, B	R	P	SHA, ULT, VIS
RBR71%18901#&	18,900	1/8	L, U	T, Q, A, B	R	P	SHA, ULT, VIS
RBR71%19101#&	19,100	1/8	L, U	T, Q, A, B	R	P	SHA, ULT, VIS
RBR71%19301#&	19,300	1/8	L, U	T, Q, A, B	R	P	SHA, ULT, VIS
RBR71%19601#&	19,600	1/8	L, U	T, Q, A, B	R	P	SHA, ULT, VIS
RBR71%19801#&	19,800	1/8	L, U	T, Q, A, B	R	P	SHA, ULT, VIS
RBR71%20001#&	20,000	1/8	L, U	T, Q, A, B	R	P	SHA, ULT, VIS
RBR71%20301#&	20,300	1/8	L, U	T, Q, A, B	R	P	SHA, ULT, VIS
RBR71%20501#&	20,500	1/8	L, U	T, Q, A, B	R	P	SHA, ULT, VIS
RBR71%20801#&	20,800	1/8	L, U	T, Q, A, B	R	P	SHA, ULT, VIS
RBR71%21001#&	21,000	1/8	L, U	T, Q, A, B	R	P	SHA, ULT, VIS
RBR71%21301#&	21,300	1/8	L, U	T, Q, A, B	R	P	SHA, ULT, VIS
RBR71%21501#&	21,500	1/8	L, U	T, Q, A, B	R	P	SHA, ULT, VIS
RBR71%21801#&	21,800	1/8	L, U	T, Q, A, B	R	P	SHA, ULT, VIS
RBR71%22101#&	22,100	1/8	L, U	T, Q, A, B	R	P	SHA, ULT, VIS
RBR71%22301#&	22,300	1/8	L, U	T, Q, A, B	R	P	SHA, ULT, VIS
RBR71%22601#&	22,600	1/8	L, U	T, Q, A, B	R	P	SHA, ULT, VIS
RBR71%22901#&	22,900	1/8	L, U	T, Q, A, B	R	P	SHA, ULT, VIS
RBR71%23201#&	23,200	1/8	L, U	T, Q, A, B	R	P	SHA, ULT, VIS
RBR71%23401#&	23,400	1/8	L, U	T, Q, A, B	R	P	SHA, ULT, VIS
RBR71%23701#&	23,700	1/8	L, U	T, Q, A, B	R	P	SHA, ULT, VIS
RBR71%24001#&	24,000	1/8	L, U	T, Q, A, B	R	P	SHA, ULT, VIS
RBR71%24301#&	24,300	1/8	L, U	T, Q, A, B	R	P	SHA, ULT, VIS
RBR71%24601#&	24,600	1/8	L, U	T, Q, A, B	R	P	SHA, ULT, VIS
RBR71%24901#&	24,900	1/8	L, U	T, Q, A, B	R	P	SHA, ULT, VIS
RBR71%25201#&	25,200	1/8	L, U	T, Q, A, B	R	P	SHA, ULT, VIS
RBR71%25501#&	25,500	1/8	L, U	T, Q, A, B	R	P	SHA, ULT, VIS
RBR71%25801#&	25,800	1/8	L, U	T, Q, A, B	R	P	SHA, ULT, VIS
RBR71%26101#&	26,100	1/8	L, U	T, Q, A, B	R	P	SHA, ULT, VIS
RBR71%26401#&	26,400	1/8	L, U	T, Q, A, B	R	P	SHA, ULT, VIS
RBR71%26701#&	26,700	1/8	L, U	T, Q, A, B	R	P	SHA, ULT, VIS
RBR71%27101#&	27,100	1/8	L, U	T, Q, A, B	R	P	SHA, ULT, VIS
RBR71%27401#&	27,400	1/8	L, U	T, Q, A, B	R	P	SHA, ULT, VIS
RBR71%27701#&	27,700	1/8	L, U	T, Q, A, B	R	P	SHA, ULT, VIS
RBR71%28001#&	28,000	1/8	L, U	T, Q, A, B	R	P	SHA, ULT, VIS
RBR71%28401#&	28,400	1/8	L, U	T, Q, A, B	R	P	SHA, ULT, VIS
RBR71%28701#&	28,700	1/8	L, U	T, Q, A, B	R	P	SHA, ULT, VIS
RBR71%29101#&	29,100	1/8	L, U	T, Q, A, B	R	P	SHA, ULT, VIS
RBR71%29401#&	29,400	1/8	L, U	T, Q, A, B	R	P	SHA, ULT, VIS
RBR71%29801#&	29,800	1/8	L, U	T, Q, A, B	R	P	SHA, ULT, VIS
RBR71%30101#&	30,100	1/8	L, U	T, Q, A, B	R	P	SHA, ULT, VIS
RBR71%30501#&	30,500	1/8	L, U	T, Q, A, B	R	P	SHA, ULT, VIS

RBR71%30901#&	30,900	1/8	L, U	T, Q, A, B	R	P	SHA, ULT, VIS
RBR71%31201#&	31,200	1/8	L, U	T, Q, A, B	R	P	SHA, ULT, VIS
RBR71%31601#&	31,600	1/8	L, U	T, Q, A, B	R	P	SHA, ULT, VIS
RBR71%32001#&	32,000	1/8	L, U	T, Q, A, B	R	P	SHA, ULT, VIS
RBR71%32401#&	32,400	1/8	L, U	T, Q, A, B	R	P	SHA, ULT, VIS
RBR71%32801#&	32,800	1/8	L, U	T, Q, A, B	R	P	SHA, ULT, VIS
RBR71%33201#&	33,200	1/8	L, U	T, Q, A, B	R	P	SHA, ULT, VIS
RBR71%33601#&	33,600	1/8	L, U	T, Q, A, B	R	P	SHA, ULT, VIS
RBR71%34001#&	34,000	1/8	L, U	T, Q, A, B	R	P	SHA, ULT, VIS
RBR71%34401#&	34,400	1/8	L, U	T, Q, A, B	R	P	SHA, ULT, VIS
RBR71%34801#&	34,800	1/8	L, U	T, Q, A, B	R	P	SHA, ULT, VIS
RBR71%35201#&	35,200	1/8	L, U	T, Q, A, B	R	P	SHA, ULT, VIS
RBR71%35701#&	35,700	1/8	L, U	T, Q, A, B	R	P	SHA, ULT, VIS
RBR71%36101#&	36,100	1/8	L, U	T, Q, A, B	R	P	SHA, ULT, VIS
RBR71%36501#&	36,500	1/8	L, U	T, Q, A, B	R	P	SHA, ULT, VIS
RBR71%37001#&	37,000	1/8	L, U	T, Q, A, B	R	P	SHA, ULT, VIS
RBR71%37401#&	37,400	1/8	L, U	T, Q, A, B	R	P	SHA, ULT, VIS
RBR71%37901#&	37,900	1/8	L, U	T, Q, A, B	R	P	SHA, ULT, VIS
RBR71%38301#&	38,300	1/8	L, U	T, Q, A, B	R	P	SHA, ULT, VIS
RBR71%38801#&	38,800	1/8	L, U	T, Q, A, B	R	P	SHA, ULT, VIS
RBR71%39201#&	39,200	1/8	L, U	T, Q, A, B	R	P	SHA, ULT, VIS
RBR71%39701#&	39,700	1/8	L, U	T, Q, A, B	R	P	SHA, ULT, VIS
RBR71%40201#&	40,200	1/8	L, U	T, Q, A, B	R	P	SHA, ULT, VIS
RBR71%40701#&	40,700	1/8	L, U	T, Q, A, B	R	P	SHA, ULT, VIS
RBR71%41201#&	41,200	1/8	L, U	T, Q, A, B	R	P	SHA, ULT, VIS
RBR71%41701#&	41,700	1/8	L, U	T, Q, A, B	R	P	SHA, ULT, VIS
RBR71%42201#&	42,200	1/8	L, U	T, Q, A, B	R	P	SHA, ULT, VIS
RBR71%42701#&	42,700	1/8	L, U	T, Q, A, B	R	P	SHA, ULT, VIS
RBR71%43201#&	43,200	1/8	L, U	T, Q, A, B	R	P	SHA, ULT, VIS
RBR71%43701#&	43,700	1/8	L, U	T, Q, A, B	R	P	SHA, ULT, VIS
RBR71%44201#&	44,200	1/8	L, U	T, Q, A, B	R	P	SHA, ULT, VIS
RBR71%44801#&	44,800	1/8	L, U	T, Q, A, B	R	P	SHA, ULT, VIS
RBR71%45301#&	45,300	1/8	L, U	T, Q, A, B	R	P	SHA, ULT, VIS
RBR71%45901#&	45,900	1/8	L, U	T, Q, A, B	R	P	SHA, ULT, VIS
RBR71%46401#&	46,400	1/8	L, U	T, Q, A, B	R	P	SHA, ULT, VIS
RBR71%47001#&	47,000	1/8	L, U	T, Q, A, B	R	P	SHA, ULT, VIS
RBR71%47501#&	47,500	1/8	L, U	T, Q, A, B	R	P	SHA, ULT, VIS
RBR71%48101#&	48,100	1/8	L, U	T, Q, A, B	R	P	SHA, ULT, VIS
RBR71%48701#&	48,700	1/8	L, U	T, Q, A, B	R	P	SHA, ULT, VIS
RBR71%49301#&	49,300	1/8	L, U	T, Q, A, B	R	P	SHA, ULT, VIS
RBR71%49901#&	49,900	1/8	L, U	T, Q, A, B	R	P	SHA, ULT, VIS
RBR71%50501#&	50,500	1/8	L, U	T, Q, A, B	R	P	SHA, ULT, VIS
RBR71%51101#&	51,100	1/8	L, U	T, Q, A, B	R	P	SHA, ULT
RBR71%51701#&	51,700	1/8	L, U	T, Q, A, B	R	P	SHA, ULT
RBR71%52301#&	52,300	1/8	L, U	T, Q, A, B	R	P	SHA, ULT
RBR71%53001#&	53,000	1/8	L, U	T, Q, A, B	R	P	SHA, ULT
RBR71%53601#&	53,600	1/8	L, U	T, Q, A, B	R	P	SHA, ULT

RBR71%54201#&	54,200	1/8	L, U	T, Q, A, B	R	P	SHA, ULT
RBR71%54901#&	54,900	1/8	L, U	T, Q, A, B	R	P	SHA, ULT
RBR71%55601#&	55,600	1/8	L, U	T, Q, A, B	R	P	SHA, ULT
RBR71%56201#&	56,200	1/8	L, U	T, Q, A, B	R	P	SHA, ULT
RBR71%56901#&	56,900	1/8	L, U	T, Q, A, B	R	P	SHA, ULT
RBR71%57601#&	57,600	1/8	L, U	T, Q, A, B	R	P	SHA, ULT
RBR71%58301#&	58,300	1/8	L, U	T, Q, A, B	R	P	SHA, ULT
RBR71%59001#&	59,000	1/8	L, U	T, Q, A, B	R	P	SHA, ULT
RBR71%59701#&	59,700	1/8	L, U	T, Q, A, B	R	P	SHA, ULT
RBR71%60401#&	60,400	1/8	L, U	T, Q, A, B	R	P	SHA, ULT
RBR71%61201#&	61,200	1/8	L, U	T, Q, A, B	R	P	SHA, ULT
RBR71%61901#&	61,900	1/8	L, U	T, Q, A, B	R	P	SHA, ULT
RBR71%62601#&	62,600	1/8	L, U	T, Q, A, B	R	P	SHA, ULT
RBR71%63401#&	63,400	1/8	L, U	T, Q, A, B	R	P	SHA, ULT
RBR71%64201#&	64,200	1/8	L, U	T, Q, A, B	R	P	SHA, ULT
RBR71%64901#&	64,900	1/8	L, U	T, Q, A, B	R	P	SHA, ULT
RBR71%65701#&	65,700	1/8	L, U	T, Q, A, B	R	P	SHA, ULT
RBR71%66501#&	66,500	1/8	L, U	T, Q, A, B	R	P	SHA, ULT
RBR71%67301#&	67,300	1/8	L, U	T, Q, A, B	R	P	SHA, ULT
RBR71%68101#&	68,100	1/8	L, U	T, Q, A, B	R	P	SHA, ULT
RBR71%69001#&	69,000	1/8	L, U	T, Q, A, B	R	P	SHA, ULT
RBR71%69801#&	69,800	1/8	L, U	T, Q, A, B	R	P	SHA, ULT
RBR71%70601#&	70,600	1/8	L, U	T, Q, A, B	R	P	SHA, ULT
RBR71%71501#&	71,500	1/8	L, U	T, Q, A, B	R	P	SHA, ULT
RBR71%72301#&	72,300	1/8	L, U	T, Q, A, B	R	P	SHA, ULT
RBR71%73201#&	73,200	1/8	L, U	T, Q, A, B	R	P	SHA, ULT
RBR71%74101#&	74,100	1/8	L, U	T, Q, A, B	R	P	SHA, ULT
RBR71%75001#&	75,000	1/8	L, U	T, Q, A, B	R	P	SHA, ULT
RBR71%75901#&	75,900	1/8	L, U	T, Q, A, B	R	P	SHA, ULT
RBR71%76802#&	76,800	1/8	L, U	T, Q, A, B	R	P	SHA, ULT
RBR71%77702#&	77,700	1/8	L, U	T, Q, A, B	R	P	SHA, ULT
RBR71%78702#&	78,700	1/8	L, U	T, Q, A, B	R	P	SHA, ULT
RBR71%79602#&	79,600	1/8	L, U	T, Q, A, B	R	P	SHA, ULT
RBR71%80602#&	80,600	1/8	L, U	T, Q, A, B	R	P	SHA, ULT
RBR71%81602#&	81,600	1/8	L, U	T, Q, A, B	R	P	SHA, ULT
RBR71%82502#&	82,500	1/8	L, U	T, Q, A, B	R	P	SHA, ULT
RBR71%83502#&	83,500	1/8	L, U	T, Q, A, B	R	P	SHA, ULT
RBR71%84502#&	84,500	1/8	L, U	T, Q, A, B	R	P	SHA, ULT
RBR71%85602#&	85,600	1/8	L, U	T, Q, A, B	R	P	SHA, ULT
RBR71%86602#&	86,600	1/8	L, U	T, Q, A, B	R	P	SHA, ULT
RBR71%87602#&	87,600	1/8	L, U	T, Q, A, B	R	P	SHA, ULT
RBR71%88702#&	88,700	1/8	L, U	T, Q, A, B	R	P	SHA, ULT
RBR71%89802#&	89,800	1/8	L, U	T, Q, A, B	R	P	SHA, ULT
RBR71%90902#&	90,900	1/8	L, U	T, Q, A, B	R	P	SHA, ULT
RBR71%92002#&	92,000	1/8	L, U	T, Q, A, B	R	P	SHA, ULT
RBR71%93102#&	93,100	1/8	L, U	T, Q, A, B	R	P	SHA, ULT
RBR71%94202#&	94,200	1/8	L, U	T, Q, A, B	R	P	SHA, ULT

RBR71%95302#&	95,300	1/8	L, U	T, Q, A, B	R	P	SHA, ULT
RBR71%96502#&	96,500	1/8	L, U	T, Q, A, B	R	P	SHA, ULT
RBR71%97602#&	97,600	1/8	L, U	T, Q, A, B	R	P	SHA, ULT
RBR71%98802#&	98,800	1/8	L, U	T, Q, A, B	R	P	SHA, ULT
RBR71%10002#&	100,000	1/8	L, U	T, Q, A, B	R	P	SHA, ULT
RBR71%10102#&	101,000	1/8	L, U	T, Q, A, B	R	P	SHA, ULT
RBR71%10202#&	102,000	1/8	L, U	T, Q, A, B	R	P	SHA, ULT
RBR71%10402#&	104,000	1/8	L, U	T, Q, A, B	R	P	SHA, ULT
RBR71%10502#&	105,000	1/8	L, U	T, Q, A, B	R	P	SHA, ULT
RBR71%10602#&	106,000	1/8	L, U	T, Q, A, B	R	P	SHA, ULT
RBR71%10702#&	107,000	1/8	L, U	T, Q, A, B	R	P	SHA, ULT
RBR71%10902#&	109,000	1/8	L, U	T, Q, A, B	R	P	SHA, ULT
RBR71%11002#&	110,000	1/8	L, U	T, Q, A, B	R	P	SHA, ULT
RBR71%11102#&	111,000	1/8	L, U	T, Q, A, B	R	P	SHA, ULT
RBR71%11302#&	113,000	1/8	L, U	T, Q, A, B	R	P	SHA, ULT
RBR71%11402#&	114,000	1/8	L, U	T, Q, A, B	R	P	SHA, ULT
RBR71%11502#&	115,000	1/8	L, U	T, Q, A, B	R	P	SHA, ULT
RBR71%11702#&	117,000	1/8	L, U	T, Q, A, B	R	P	SHA, ULT
RBR71%11802#&	118,000	1/8	L, U	T, Q, A, B	R	P	SHA, ULT
RBR71%12002#&	120,000	1/8	L, U	T, Q, A, B	R	P	SHA, ULT
RBR71%12102#&	121,000	1/8	L, U	T, Q, A, B	R	P	SHA, ULT
RBR71%12302#&	123,000	1/8	L, U	T, Q, A, B	R	P	SHA, ULT
RBR71%12402#&	124,000	1/8	L, U	T, Q, A, B	R	P	SHA, ULT
RBR71%12602#&	126,000	1/8	L, U	T, Q, A, B	R	P	SHA, ULT
RBR71%12702#&	127,000	1/8	L, U	T, Q, A, B	R	P	SHA, ULT
RBR71%12902#&	129,000	1/8	L, U	T, Q, A, B	R	P	SHA, ULT
RBR71%13002#&	130,000	1/8	L, U	T, Q, A, B	R	P	SHA, ULT
RBR71%13202#&	132,000	1/8	L, U	T, Q, A, B	R	P	SHA, ULT
RBR71%13302#&	133,000	1/8	L, U	T, Q, A, B	R	P	SHA, ULT
RBR71%13502#&	135,000	1/8	L, U	T, Q, A, B	R	P	SHA, ULT
RBR71%13702#&	137,000	1/8	L, U	T, Q, A, B	R	P	SHA, ULT
RBR71%13802#&	138,000	1/8	L, U	T, Q, A, B	R	P	SHA, ULT
RBR71%14002#&	140,000	1/8	L, U	T, Q, A, B	R	P	SHA, ULT
RBR71%14202#&	142,000	1/8	L, U	T, Q, A, B	R	P	SHA, ULT
RBR71%14302#&	143,000	1/8	L, U	T, Q, A, B	R	P	SHA, ULT
RBR71%14502#&	145,000	1/8	L, U	T, Q, A, B	R	P	SHA, ULT
RBR71%14702#&	147,000	1/8	L, U	T, Q, A, B	R	P	SHA, ULT
RBR71%14902#&	149,000	1/8	L, U	T, Q, A, B	R	P	SHA, ULT
RBR71%15002#&	150,000	1/8	L, U	T, Q, A, B	R	P	SHA, ULT

RBR71 RESISTORS DECADE BREAKDOWN

Click on the link below to see the associated parts selection listing:

Resistance Range
10.00 Ohms through 98.80 Ohms

100.0 Ohms through 988.0 Ohms
1,000 Ohms through 9,880 Ohms
10,000 Ohms through 98,800 Ohms
100,000 Ohms through 150,000 Ohms

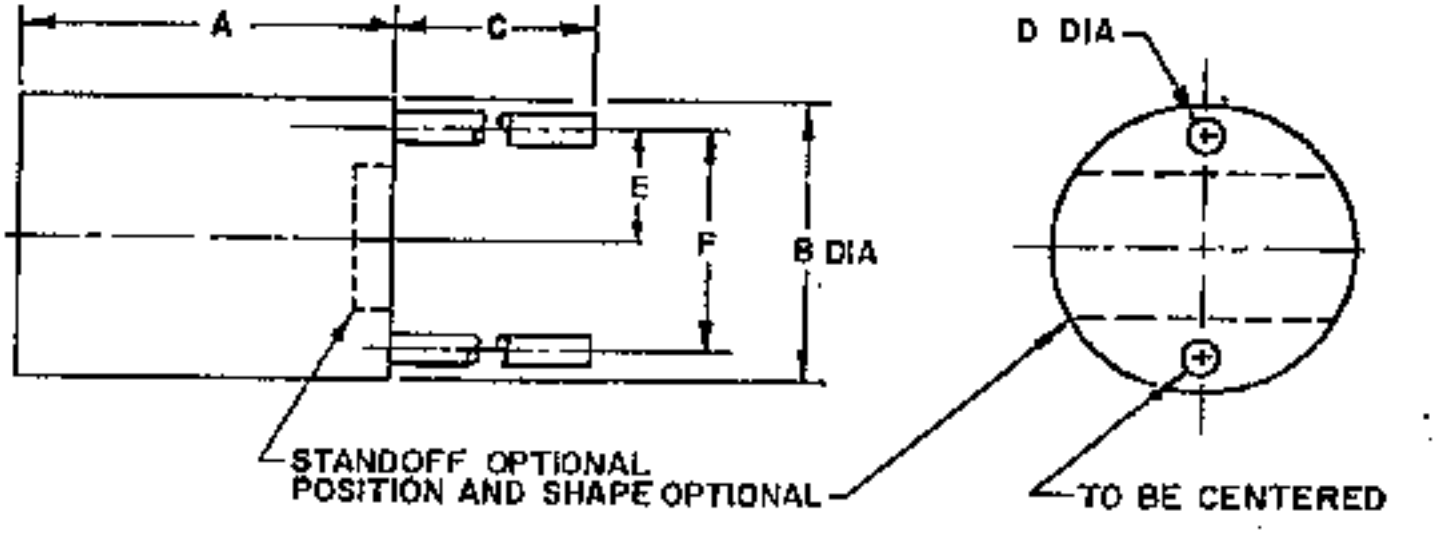

Physical Dimensions Table

Resistor Style	A	B	C (min)	D	E	F
RBR71	0.312 +/- 0.031	0.250 +/- 0.031	1.000	0.025 +/- 0.002	0.100 +/- 0.002	0.200 +/- 0.010
Click Here to See Axial Lead Styles						

RBR71 Wirewound Resistors: 10.00 Ohms through 98.80 Ohms

	Resistance	Power	Terminal	Resistance	Level 1	Level 2	
Part Number	Value (Ohms)	Rating (W)	Characteristic (#)	Tolerance (%)	(FRL)(&)	(FRL)(&)	Manufacturer

RBR71#10R00%&	10.00	1/8	L, U	T, Q, A, B	R	P	SHA
RBR71#10R10%&	10.10	1/8	L, U	T, Q, A, B	R	P	SHA
RBR71#10R20%&	10.20	1/8	L, U	T, Q, A, B	R	P	SHA
RBR71#10R40%&	10.40	1/8	L, U	T, Q, A, B	R	P	SHA
RBR71#10R50%&	10.50	1/8	L, U	T, Q, A, B	R	P	SHA
RBR71#10R60%&	10.60	1/8	L, U	T, Q, A, B	R	P	SHA
RBR71#10R70%&	10.70	1/8	L, U	T, Q, A, B	R	P	SHA
RBR71#10R90%&	10.90	1/8	L, U	T, Q, A, B	R	P	SHA
RBR71#11R00%&	11.00	1/8	L, U	T, Q, A, B	R	P	SHA
RBR71#11R10%&	11.10	1/8	L, U	T, Q, A, B	R	P	SHA
RBR71#11R30%&	11.30	1/8	L, U	T, Q, A, B	R	P	SHA
RBR71#11R40%&	11.40	1/8	L, U	T, Q, A, B	R	P	SHA
RBR71#11R50%&	11.50	1/8	L, U	T, Q, A, B	R	P	SHA
RBR71#11R70%&	11.70	1/8	L, U	T, Q, A, B	R	P	SHA
	Resistance	Power	Terminal	Resistance	Level 1	Level 2	
Part Number	Value (Ohms)	Rating (W)	Characteristic (#)	Tolerance (%)	(FRL)(&)	(FRL)(&)	Manufacturer
RBR71#11R80%&	11.80	1/8	L, U	T, Q, A, B	R	P	SHA
RBR71#12R00%&	12.00	1/8	L, U	T, Q, A, B	R	P	SHA
RBR71#12R10%&	12.10	1/8	L, U	T, Q, A, B	R	P	SHA
RBR71#12R30%&	12.30	1/8	L, U	T, Q, A, B	R	P	SHA
RBR71#12R40%&	12.40	1/8	L, U	T, Q, A, B	R	P	SHA
RBR71#12R60%&	12.60	1/8	L, U	T, Q, A, B	R	P	SHA
RBR71#12R70%&	12.70	1/8	L, U	T, Q, A, B	R	P	SHA
RBR71#12R90%&	12.90	1/8	L, U	T, Q, A, B	R	P	SHA
RBR71#13R00%&	13.00	1/8	L, U	T, Q, A, B	R	P	SHA
RBR71#13R20%&	13.20	1/8	L, U	T, Q, A, B	R	P	SHA
RBR71#13R30%&	13.30	1/8	L, U	T, Q, A, B	R	P	SHA
RBR71#13R50%&	13.50	1/8	L, U	T, Q, A, B	R	P	SHA
RBR71#13R70%&	13.70	1/8	L, U	T, Q, A, B	R	P	SHA
RBR71#13R80%&	13.80	1/8	L, U	T, Q, A, B	R	P	SHA
	Resistance	Power	Terminal	Resistance	Level 1	Level 2	
Part Number	Value (Ohms)	Rating (W)	Characteristic (#)	Tolerance (%)	(FRL)(&)	(FRL)(&)	Manufacturer
RBR71#14R00%&	14.00	1/8	L, U	T, Q, A, B	R	P	SHA
RBR71#14R20%&	14.20	1/8	L, U	T, Q, A, B	R	P	SHA
RBR71#14R30%&	14.30	1/8	L, U	T, Q, A, B	R	P	SHA
RBR71#14R50%&	14.50	1/8	L, U	T, Q, A, B	R	P	SHA
RBR71#14R70%&	14.70	1/8	L, U	T, Q, A, B	R	P	SHA
RBR71#14R90%&	14.90	1/8	L, U	T, Q, A, B	R	P	SHA
RBR71#15R00%&	15.00	1/8	L, U	T, Q, A, B	R	P	SHA
RBR71#15R20%&	15.20	1/8	L, U	T, Q, A, B	R	P	SHA
RBR71#15R40%&	15.40	1/8	L, U	T, Q, A, B	R	P	SHA
RBR71#15R60%&	15.60	1/8	L, U	T, Q, A, B	R	P	SHA
RBR71#15R80%&	15.80	1/8	L, U	T, Q, A, B	R	P	SHA
RBR71#16R00%&	16.00	1/8	L, U	T, Q, A, B	R	P	SHA
RBR71#16R20%&	16.20	1/8	L, U	T, Q, A, B	R	P	SHA
RBR71#16R40%&	16.40	1/8	L, U	T, Q, A, B	R	P	SHA
	Resistance	Power	Terminal	Resistance	Level 1	Level 2	

Part Number	Value (Ohms)	Rating (W)	Characteristic (#)	Tolerance (%)	(FRL)(&)	(FRL)(&)	Manufacturer
RBR71#16R50%&	16.50	1/8	L, U	T, Q, A, B	R	P	SHA
RBR71#16R70%&	16.70	1/8	L, U	T, Q, A, B	R	P	SHA
RBR71#16R90%&	16.90	1/8	L, U	T, Q, A, B	R	P	SHA
RBR71#17R20%&	17.20	1/8	L, U	T, Q, A, B	R	P	SHA
RBR71#17R40%&	17.40	1/8	L, U	T, Q, A, B	R	P	SHA
RBR71#17R60%&	17.60	1/8	L, U	T, Q, A, B	R	P	SHA
RBR71#17R80%&	17.80	1/8	L, U	T, Q, A, B	R	P	SHA
RBR71#18R00%&	18.00	1/8	L, U	T, Q, A, B	R	P	SHA
RBR71#18R20%&	18.20	1/8	L, U	T, Q, A, B	R	P	SHA
RBR71#18R40%&	18.40	1/8	L, U	T, Q, A, B	R	P	SHA
RBR71#18R70%&	18.70	1/8	L, U	T, Q, A, B	R	P	SHA
RBR71#18R90%&	18.90	1/8	L, U	T, Q, A, B	R	P	SHA
RBR71#19R10%&	19.10	1/8	L, U	T, Q, A, B	R	P	SHA
RBR71#19R30%&	19.30	1/8	L, U	T, Q, A, B	R	P	SHA
	Resistance	Power	Terminal	Resistance	Level 1	Level 2	
Part Number	Value (Ohms)	Rating (W)	Characteristic (#)	Tolerance (%)	(FRL)(&)	(FRL)(&)	Manufacturer
RBR71#19R60%&	19.60	1/8	L, U	T, Q, A, B	R	P	SHA
RBR71#19R80%&	19.80	1/8	L, U	T, Q, A, B	R	P	SHA
RBR71#20R00%&	20.00	1/8	L, U	T, Q, A, B	R	P	SHA
RBR71#20R30%&	20.30	1/8	L, U	T, Q, A, B	R	P	SHA
RBR71#20R50%&	20.50	1/8	L, U	T, Q, A, B	R	P	SHA
RBR71#20R80%&	20.80	1/8	L, U	T, Q, A, B	R	P	SHA
RBR71#21R00%&	21.00	1/8	L, U	T, Q, A, B	R	P	SHA
RBR71#21R30%&	21.30	1/8	L, U	T, Q, A, B	R	P	SHA
RBR71#21R50%&	21.50	1/8	L, U	T, Q, A, B	R	P	SHA
RBR71#21R80%&	21.80	1/8	L, U	T, Q, A, B	R	P	SHA
RBR71#22R10%&	22.10	1/8	L, U	T, Q, A, B	R	P	SHA
RBR71#22R30%&	22.30	1/8	L, U	T, Q, A, B	R	P	SHA
RBR71#22R60%&	22.60	1/8	L, U	T, Q, A, B	R	P	SHA
RBR71#22R90%&	22.90	1/8	L, U	T, Q, A, B	R	P	SHA
	Resistance	Power	Terminal	Resistance	Level 1	Level 2	
Part Number	Value (Ohms)	Rating (W)	Characteristic (#)	Tolerance (%)	(FRL)(&)	(FRL)(&)	Manufacturer
RBR71#23R20%&	23.20	1/8	L, U	T, Q, A, B	R	P	SHA
RBR71#23R40%&	23.40	1/8	L, U	T, Q, A, B	R	P	SHA
RBR71#23R70%&	23.70	1/8	L, U	T, Q, A, B	R	P	SHA
RBR71#24R00%&	24.00	1/8	L, U	T, Q, A, B	R	P	SHA
RBR71#24R30%&	24.30	1/8	L, U	T, Q, A, B	R	P	SHA
RBR71#24R60%&	24.60	1/8	L, U	T, Q, A, B	R	P	SHA
RBR71#24R90%&	24.90	1/8	L, U	T, Q, A, B	R	P	SHA
RBR71#25R20%&	25.20	1/8	L, U	T, Q, A, B	R	P	SHA
RBR71#25R50%&	25.50	1/8	L, U	T, Q, A, B	R	P	SHA
RBR71#25R80%&	25.80	1/8	L, U	T, Q, A, B	R	P	SHA
RBR71#26R10%&	26.10	1/8	L, U	T, Q, A, B	R	P	SHA
RBR71#26R40%&	26.40	1/8	L, U	T, Q, A, B	R	P	SHA
RBR71#26R70%&	26.70	1/8	L, U	T, Q, A, B	R	P	SHA
RBR71#27R10%&	27.10	1/8	L, U	T, Q, A, B	R	P	SHA

	Resistance	Power	Terminal	Resistance	Level 1	Level 2	
Part Number	Value (Ohms)	Rating (W)	Characteristic (#)	Tolerance (%)	(FRL)(&)	(FRL)(&)	Manufacturer
RBR71#27R40%&	27.40	1/8	L, U	T, Q, A, B	R	P	SHA
RBR71#27R70%&	27.70	1/8	L, U	T, Q, A, B	R	P	SHA
RBR71#28R00%&	28.00	1/8	L, U	T, Q, A, B	R	P	SHA
RBR71#28R40%&	28.40	1/8	L, U	T, Q, A, B	R	P	SHA
RBR71#28R70%&	28.70	1/8	L, U	T, Q, A, B	R	P	SHA
RBR71#29R10%&	29.10	1/8	L, U	T, Q, A, B	R	P	SHA
RBR71#29R40%&	29.40	1/8	L, U	T, Q, A, B	R	P	SHA
RBR71#29R80%&	29.80	1/8	L, U	T, Q, A, B	R	P	SHA
RBR71#30R10%&	30.10	1/8	L, U	T, Q, A, B	R	P	SHA
RBR71#30R50%&	30.50	1/8	L, U	T, Q, A, B	R	P	SHA
RBR71#30R90%&	30.90	1/8	L, U	T, Q, A, B	R	P	SHA
RBR71#31R20%&	31.20	1/8	L, U	T, Q, A, B	R	P	SHA
RBR71#31R60%&	31.60	1/8	L, U	T, Q, A, B	R	P	SHA
RBR71#32R00%&	32.00	1/8	L, U	T, Q, A, B	R	P	SHA
	Resistance	Power	Terminal	Resistance	Level 1	Level 2	
Part Number	Value (Ohms)	Rating (W)	Characteristic (#)	Tolerance (%)	(FRL)(&)	(FRL)(&)	Manufacturer
RBR71#32R40%&	32.40	1/8	L, U	T, Q, A, B	R	P	SHA
RBR71#32R80%&	32.80	1/8	L, U	T, Q, A, B	R	P	SHA
RBR71#33R20%&	33.20	1/8	L, U	T, Q, A, B	R	P	SHA
RBR71#33R60%&	33.60	1/8	L, U	T, Q, A, B	R	P	SHA
RBR71#34R00%&	34.00	1/8	L, U	T, Q, A, B	R	P	SHA
RBR71#34R40%&	34.40	1/8	L, U	T, Q, A, B	R	P	SHA
RBR71#34R80%&	34.80	1/8	L, U	T, Q, A, B	R	P	SHA
RBR71#35R20%&	35.20	1/8	L, U	T, Q, A, B	R	P	SHA
RBR71#35R70%&	35.70	1/8	L, U	T, Q, A, B	R	P	SHA
RBR71#36R10%&	36.10	1/8	L, U	T, Q, A, B	R	P	SHA
RBR71#36R50%&	36.50	1/8	L, U	T, Q, A, B	R	P	SHA
RBR71#37R00%&	37.00	1/8	L, U	T, Q, A, B	R	P	SHA
	Resistance	Power	Terminal	Resistance	Level 1	Level 2	
Part Number	Value (Ohms)	Rating (W)	Characteristic (#)	Tolerance (%)	(FRL)(&)	(FRL)(&)	Manufacturer
RBR71#37R40%&	37.40	1/8	L, U	T, Q, A, B	R	P	SHA
RBR71#37R90%&	37.90	1/8	L, U	T, Q, A, B	R	P	SHA
RBR71#38R30%&	38.30	1/8	L, U	T, Q, A, B	R	P	SHA
RBR71#38R80%&	38.80	1/8	L, U	T, Q, A, B	R	P	SHA
RBR71#39R20%&	39.20	1/8	L, U	T, Q, A, B	R	P	SHA
RBR71#39R70%&	39.70	1/8	L, U	T, Q, A, B	R	P	SHA
RBR71#40R20%&	40.20	1/8	L, U	T, Q, A, B	R	P	SHA
RBR71#40R70%&	40.70	1/8	L, U	T, Q, A, B	R	P	SHA
RBR71#41R20%&	41.20	1/8	L, U	T, Q, A, B	R	P	SHA
RBR71#41R70%&	41.70	1/8	L, U	T, Q, A, B	R	P	SHA
RBR71#42R20%&	42.20	1/8	L, U	T, Q, A, B	R	P	SHA
RBR71#42R70%&	42.70	1/8	L, U	T, Q, A, B	R	P	SHA
RBR71#43R20%&	43.20	1/8	L, U	T, Q, A, B	R	P	SHA
RBR71#43R70%&	43.70	1/8	L, U	T, Q, A, B	R	P	SHA
	Resistance	Power	Terminal	Resistance	Level 1	Level 2	

Part Number	Value (Ohms)	Rating (W)	Characteristic (#)	Tolerance (%)	(FRL)(&)	(FRL)(&)	Manufacturer
RBR71#44R20%&	44.20	1/8	L, U	T, Q, A, B	R	P	SHA
RBR71#44R80%&	44.80	1/8	L, U	T, Q, A, B	R	P	SHA
RBR71#45R30%&	45.30	1/8	L, U	T, Q, A, B	R	P	SHA
RBR71#45R90%&	45.90	1/8	L, U	T, Q, A, B	R	P	SHA
RBR71#46R40%&	46.40	1/8	L, U	T, Q, A, B	R	P	SHA
RBR71#47R00%&	47.00	1/8	L, U	T, Q, A, B	R	P	SHA
RBR71#47R50%&	47.50	1/8	L, U	T, Q, A, B	R	P	SHA
RBR71#48R10%&	48.10	1/8	L, U	T, Q, A, B	R	P	SHA
RBR71#48R70%&	48.70	1/8	L, U	T, Q, A, B	R	P	SHA
RBR71#49R30%&	49.30	1/8	L, U	T, Q, A, B	R	P	SHA
RBR71#49R90%&	49.90	1/8	L, U	T, Q, A, B	R	P	SHA
RBR71#50R50%&	50.50	1/8	L, U	T, Q, A, B	R	P	SHA
RBR71#51R10%&	51.10	1/8	L, U	T, Q, A, B	R	P	SHA
RBR71#51R70%&	51.70	1/8	L, U	T, Q, A, B	R	P	SHA
	Resistance	Power	Terminal	Resistance	Level 1	Level 2	
Part Number	Value (Ohms)	Rating (W)	Characteristic (#)	Tolerance (%)	(FRL)(&)	(FRL)(&)	Manufacturer
RBR71#52R30%&	52.30	1/8	L, U	T, Q, A, B	R	P	SHA
RBR71#53R00%&	53.00	1/8	L, U	T, Q, A, B	R	P	SHA
RBR71#53R60%&	53.60	1/8	L, U	T, Q, A, B	R	P	SHA
RBR71#54R20%&	54.20	1/8	L, U	T, Q, A, B	R	P	SHA
RBR71#54R90%&	54.90	1/8	L, U	T, Q, A, B	R	P	SHA
RBR71#55R60%&	55.60	1/8	L, U	T, Q, A, B	R	P	SHA
RBR71#56R20%&	56.20	1/8	L, U	T, Q, A, B	R	P	SHA
RBR71#56R90%&	56.90	1/8	L, U	T, Q, A, B	R	P	SHA
RBR71#57R60%&	57.60	1/8	L, U	T, Q, A, B	R	P	SHA
RBR71#58R30%&	58.30	1/8	L, U	T, Q, A, B	R	P	SHA
RBR71#59R00%&	59.00	1/8	L, U	T, Q, A, B	R	P	SHA
RBR71#59R70%&	59.70	1/8	L, U	T, Q, A, B	R	P	SHA
RBR71#60R40%&	60.40	1/8	L, U	T, Q, A, B	R	P	SHA
RBR71#61R20%&	61.20	1/8	L, U	T, Q, A, B	R	P	SHA
	Resistance	Power	Terminal	Resistance	Level 1	Level 2	
Part Number	Value (Ohms)	Rating (W)	Characteristic (#)	Tolerance (%)	(FRL)(&)	(FRL)(&)	Manufacturer
RBR71#61R90%&	61.90	1/8	L, U	T, Q, A, B	R	P	SHA
RBR71#62R60%&	62.60	1/8	L, U	T, Q, A, B	R	P	SHA
RBR71#63R40%&	63.40	1/8	L, U	T, Q, A, B	R	P	SHA
RBR71#64R20%&	64.20	1/8	L, U	T, Q, A, B	R	P	SHA
RBR71#64R90%&	64.90	1/8	L, U	T, Q, A, B	R	P	SHA
RBR71#65R70%&	65.70	1/8	L, U	T, Q, A, B	R	P	SHA
RBR71#66R50%&	66.50	1/8	L, U	T, Q, A, B	R	P	SHA
RBR71#67R30%&	67.30	1/8	L, U	T, Q, A, B	R	P	SHA
RBR71#68R10%&	68.10	1/8	L, U	T, Q, A, B	R	P	SHA
RBR71#69R00%&	69.00	1/8	L, U	T, Q, A, B	R	P	SHA
RBR71#69R80%&	69.80	1/8	L, U	T, Q, A, B	R	P	SHA
RBR71#70R60%&	70.60	1/8	L, U	T, Q, A, B	R	P	SHA
RBR71#71R50%&	71.50	1/8	L, U	T, Q, A, B	R	P	SHA
RBR71#72R30%&	72.30	1/8	L, U	T, Q, A, B	R	P	SHA

	Resistance	Power	Terminal	Resistance	Level 1	Level 2	
Part Number	Value (Ohms)	Rating (W)	Characteristic (#)	Tolerance (%)	(FRL)(&)	(FRL)(&)	Manufacturer
RBR71#73R20%&	73.20	1/8	L, U	T, Q, A, B	R	P	SHA
RBR71#74R10%&	74.10	1/8	L, U	T, Q, A, B	R	P	SHA
RBR71#75R00%&	75.00	1/8	L, U	T, Q, A, B	R	P	SHA
RBR71#75R90%&	75.90	1/8	L, U	T, Q, A, B	R	P	SHA
RBR71#76R80%&	76.80	1/8	L, U	T, Q, A, B	R	P	SHA
RBR71#77R70%&	77.70	1/8	L, U	T, Q, A, B	R	P	SHA
RBR71#78R70%&	78.70	1/8	L, U	T, Q, A, B	R	P	SHA
RBR71#79R60%&	79.60	1/8	L, U	T, Q, A, B	R	P	SHA
RBR71#80R60%&	80.60	1/8	L, U	T, Q, A, B	R	P	SHA
RBR71#81R60%&	81.60	1/8	L, U	T, Q, A, B	R	P	SHA
RBR71#82R50%&	82.50	1/8	L, U	T, Q, A, B	R	P	SHA
RBR71#83R50%&	83.50	1/8	L, U	T, Q, A, B	R	P	SHA
	Resistance	Power	Terminal	Resistance	Level 1	Level 2	
Part Number	Value (Ohms)	Rating (W)	Characteristic (#)	Tolerance (%)	(FRL)(&)	(FRL)(&)	Manufacturer
RBR71#84R50%&	84.50	1/8	L, U	T, Q, A, B	R	P	SHA
RBR71#85R60%&	85.60	1/8	L, U	T, Q, A, B	R	P	SHA
RBR71#86R60%&	86.60	1/8	L, U	T, Q, A, B	R	P	SHA
RBR71#87R60%&	87.60	1/8	L, U	T, Q, A, B	R	P	SHA
RBR71#88R70%&	88.70	1/8	L, U	T, Q, A, B	R	P	SHA
RBR71#89R80%&	89.80	1/8	L, U	T, Q, A, B	R	P	SHA
RBR71#90R90%&	90.90	1/8	L, U	T, Q, A, B	R	P	SHA
RBR71#92R00%&	92.00	1/8	L, U	T, Q, A, B	R	P	SHA
RBR71#93R10%&	93.10	1/8	L, U	T, Q, A, B	R	P	SHA
RBR71#94R20%&	94.20	1/8	L, U	T, Q, A, B	R	P	SHA
RBR71#95R30%&	95.30	1/8	L, U	T, Q, A, B	R	P	SHA
RBR71#96R50%&	96.50	1/8	L, U	T, Q, A, B	R	P	SHA
RBR71#97R60%&	97.60	1/8	L, U	T, Q, A, B	R	P	SHA
RBR71#98R80%&	98.80	1/8	L, U	T, Q, A, B	R	P	SHA
	Resistance	Power	Terminal	Resistance	Level 1	Level 2	
Part Number	Value (Ohms)	Rating (W)	Characteristic (#)	Tolerance (%)	(FRL)(&)	(FRL)(&)	Manufacturer

RBR71 Wirewound Resistors: 100.0 Ohms through 988.0 Ohms

	Resistance	Power	Terminal	Resistance	Level 1	Level 2	
Part Number	Value (Ohms)	Rating (W)	Characteristic (#)	Tolerance (%)	(FRL)(&)	(FRL)(&)	Manufacturer
RBR71#100R0%&	100.0	1/8	L, U	T, Q, A, B	R	P	SHA
RBR71#101R0%&	101.0	1/8	L, U	T, Q, A, B	R	P	SHA
RBR71#102R0%&	102.0	1/8	L, U	T, Q, A, B	R	P	SHA
RBR71#104R0%&	104.0	1/8	L, U	T, Q, A, B	R	P	SHA
RBR71#105R0%&	105.0	1/8	L, U	T, Q, A, B	R	P	SHA
RBR71#106R0%&	106.0	1/8	L, U	T, Q, A, B	R	P	SHA
RBR71#107R0%&	107.0	1/8	L, U	T, Q, A, B	R	P	SHA
RBR71#109R0%&	109.0	1/8	L, U	T, Q, A, B	R	P	SHA

RBR71#110R0%&	110.0	1/8	L, U	T, Q, A, B	R	P	SHA
RBR71#111R0%&	111.0	1/8	L, U	T, Q, A, B	R	P	SHA
RBR71#113R0%&	113.0	1/8	L, U	T, Q, A, B	R	P	SHA
RBR71#114R0%&	114.0	1/8	L, U	T, Q, A, B	R	P	SHA
RBR71#115R0%&	115.0	1/8	L, U	T, Q, A, B	R	P	SHA
RBR71#117R0%&	117.0	1/8	L, U	T, Q, A, B	R	P	SHA
	Resistance	Power	Terminal	Resistance	Level 1	Level 2	
Part Number	Value (Ohms)	Rating (W)	Characteristic (#)	Tolerance (%)	(FRL)(&)	(FRL)(&)	Manufacturer
RBR71#118R0%&	118.0	1/8	L, U	T, Q, A, B	R	P	SHA
RBR71#120R0%&	120.0	1/8	L, U	T, Q, A, B	R	P	SHA
RBR71#121R0%&	121.0	1/8	L, U	T, Q, A, B	R	P	SHA
RBR71#123R0%&	123.0	1/8	L, U	T, Q, A, B	R	P	SHA
RBR71#124R0%&	124.0	1/8	L, U	T, Q, A, B	R	P	SHA
RBR71#126R0%&	126.0	1/8	L, U	T, Q, A, B	R	P	SHA
RBR71#127R0%&	127.0	1/8	L, U	T, Q, A, B	R	P	SHA
RBR71#129R0%&	129.0	1/8	L, U	T, Q, A, B	R	P	SHA
RBR71#130R0%&	130.0	1/8	L, U	T, Q, A, B	R	P	SHA
RBR71#132R0%&	132.0	1/8	L, U	T, Q, A, B	R	P	SHA
RBR71#133R0%&	133.0	1/8	L, U	T, Q, A, B	R	P	SHA
RBR71#135R0%&	135.0	1/8	L, U	T, Q, A, B	R	P	SHA
RBR71#137R0%&	137.0	1/8	L, U	T, Q, A, B	R	P	SHA
RBR71#138R0%&	138.0	1/8	L, U	T, Q, A, B	R	P	SHA
	Resistance	Power	Terminal	Resistance	Level 1	Level 2	
Part Number	Value (Ohms)	Rating (W)	Characteristic (#)	Tolerance (%)	(FRL)(&)	(FRL)(&)	Manufacturer
RBR71#140R0%&	140.0	1/8	L, U	T, Q, A, B	R	P	SHA
RBR71#142R0%&	142.0	1/8	L, U	T, Q, A, B	R	P	SHA
RBR71#143R0%&	143.0	1/8	L, U	T, Q, A, B	R	P	SHA
RBR71#145R0%&	145.0	1/8	L, U	T, Q, A, B	R	P	SHA
RBR71#147R0%&	147.0	1/8	L, U	T, Q, A, B	R	P	SHA
RBR71#149R0%&	149.0	1/8	L, U	T, Q, A, B	R	P	SHA
RBR71#150R0%&	150.0	1/8	L, U	T, Q, A, B	R	P	SHA
RBR71#152R0%&	152.0	1/8	L, U	T, Q, A, B	R	P	SHA
RBR71#154R0%&	154.0	1/8	L, U	T, Q, A, B	R	P	SHA
RBR71#156R0%&	156.0	1/8	L, U	T, Q, A, B	R	P	SHA
RBR71#158R0%&	158.0	1/8	L, U	T, Q, A, B	R	P	SHA
RBR71#160R0%&	160.0	1/8	L, U	T, Q, A, B	R	P	SHA
	Resistance	Power	Terminal	Resistance	Level 1	Level 2	
Part Number	Value (Ohms)	Rating (W)	Characteristic (#)	Tolerance (%)	(FRL)(&)	(FRL)(&)	Manufacturer
RBR71#162R0%&	162.0	1/8	L, U	T, Q, A, B	R	P	SHA
RBR71#164R0%&	164.0	1/8	L, U	T, Q, A, B	R	P	SHA
RBR71#165R0%&	165.0	1/8	L, U	T, Q, A, B	R	P	SHA
RBR71#167R0%&	167.0	1/8	L, U	T, Q, A, B	R	P	SHA
RBR71#169R0%&	169.0	1/8	L, U	T, Q, A, B	R	P	SHA
RBR71#172R0%&	172.0	1/8	L, U	T, Q, A, B	R	P	SHA
RBR71#174R0%&	174.0	1/8	L, U	T, Q, A, B	R	P	SHA
RBR71#176R0%&	176.0	1/8	L, U	T, Q, A, B	R	P	SHA
RBR71#178R0%&	178.0	1/8	L, U	T, Q, A, B	R	P	SHA

RBR71#180R0%&	180.0	1/8	L, U	T, Q, A, B	R	P	SHA
RBR71#182R0%&	182.0	1/8	L, U	T, Q, A, B	R	P	SHA
RBR71#184R0%&	184.0	1/8	L, U	T, Q, A, B	R	P	SHA
RBR71#187R0%&	187.0	1/8	L, U	T, Q, A, B	R	P	SHA
RBR71#189R0%&	189.0	1/8	L, U	T, Q, A, B	R	P	SHA
	Resistance	Power	Terminal	Resistance	Level 1	Level 2	
Part Number	Value (Ohms)	Rating (W)	Characteristic (#)	Tolerance (%)	(FRL)(&)	(FRL)(&)	Manufacturer
RBR71#191R0%&	191.0	1/8	L, U	T, Q, A, B	R	P	SHA
RBR71#193R0%&	193.0	1/8	L, U	T, Q, A, B	R	P	SHA
RBR71#196R0%&	196.0	1/8	L, U	T, Q, A, B	R	P	SHA
RBR71#198R0%&	198.0	1/8	L, U	T, Q, A, B	R	P	SHA
RBR71#200R0%&	200.0	1/8	L, U	T, Q, A, B	R	P	SHA
RBR71#203R0%&	203.0	1/8	L, U	T, Q, A, B	R	P	SHA
RBR71#205R0%&	205.0	1/8	L, U	T, Q, A, B	R	P	SHA
RBR71#208R0%&	208.0	1/8	L, U	T, Q, A, B	R	P	SHA
RBR71#210R0%&	210.0	1/8	L, U	T, Q, A, B	R	P	SHA
RBR71#213R0%&	213.0	1/8	L, U	T, Q, A, B	R	P	SHA
RBR71#215R0%&	215.0	1/8	L, U	T, Q, A, B	R	P	SHA
RBR71#218R0%&	218.0	1/8	L, U	T, Q, A, B	R	P	SHA
RBR71#221R0%&	221.0	1/8	L, U	T, Q, A, B	R	P	SHA
RBR71#223R0%&	223.0	1/8	L, U	T, Q, A, B	R	P	SHA
	Resistance	Power	Terminal	Resistance	Level 1	Level 2	
Part Number	Value (Ohms)	Rating (W)	Characteristic (#)	Tolerance (%)	(FRL)(&)	(FRL)(&)	Manufacturer
RBR71#226R0%&	226.0	1/8	L, U	T, Q, A, B	R	P	SHA
RBR71#229R0%&	229.0	1/8	L, U	T, Q, A, B	R	P	SHA
RBR71#232R0%&	232.0	1/8	L, U	T, Q, A, B	R	P	SHA
RBR71#234R0%&	234.0	1/8	L, U	T, Q, A, B	R	P	SHA
RBR71#237R0%&	237.0	1/8	L, U	T, Q, A, B	R	P	SHA
RBR71#240R0%&	240.0	1/8	L, U	T, Q, A, B	R	P	SHA
RBR71#243R0%&	243.0	1/8	L, U	T, Q, A, B	R	P	SHA
RBR71#246R0%&	246.0	1/8	L, U	T, Q, A, B	R	P	SHA
RBR71#249R0%&	249.0	1/8	L, U	T, Q, A, B	R	P	SHA
RBR71#252R0%&	252.0	1/8	L, U	T, Q, A, B	R	P	SHA
RBR71#255R0%&	255.0	1/8	L, U	T, Q, A, B	R	P	SHA
RBR71#258R0%&	258.0	1/8	L, U	T, Q, A, B	R	P	SHA
RBR71#261R0%&	261.0	1/8	L, U	T, Q, A, B	R	P	SHA
RBR71#264R0%&	264.0	1/8	L, U	T, Q, A, B	R	P	SHA
	Resistance	Power	Terminal	Resistance	Level 1	Level 2	
Part Number	Value (Ohms)	Rating (W)	Characteristic (#)	Tolerance (%)	(FRL)(&)	(FRL)(&)	Manufacturer
RBR71#267R0%&	267.0	1/8	L, U	T, Q, A, B	R	P	SHA
RBR71#271R0%&	271.0	1/8	L, U	T, Q, A, B	R	P	SHA
RBR71#274R0%&	274.0	1/8	L, U	T, Q, A, B	R	P	SHA
RBR71#277R0%&	277.0	1/8	L, U	T, Q, A, B	R	P	SHA
RBR71#280R0%&	280.0	1/8	L, U	T, Q, A, B	R	P	SHA
RBR71#284R0%&	284.0	1/8	L, U	T, Q, A, B	R	P	SHA
RBR71#287R0%&	287.0	1/8	L, U	T, Q, A, B	R	P	SHA
RBR71#291R0%&	291.0	1/8	L, U	T, Q, A, B	R	P	SHA

RBR71#294R0%&	294.0	1/8	L, U	T, Q, A, B	R	P	SHA
RBR71#298R0%&	298.0	1/8	L, U	T, Q, A, B	R	P	SHA
RBR71#301R0%&	301.0	1/8	L, U	T, Q, A, B	R	P	SHA
RBR71#305R0%&	305.0	1/8	L, U	T, Q, A, B	R	P	SHA
RBR71#309R0%&	309.0	1/8	L, U	T, Q, A, B	R	P	SHA
RBR71#312R0%&	312.0	1/8	L, U	T, Q, A, B	R	P	SHA
	Resistance	Power	Terminal	Resistance	Level 1	Level 2	
Part Number	Value (Ohms)	Rating (W)	Characteristic (#)	Tolerance (%)	(FRL)(&)	(FRL)(&)	Manufacturer
RBR71#316R0%&	316.0	1/8	L, U	T, Q, A, B	R	P	SHA
RBR71#320R0%&	320.0	1/8	L, U	T, Q, A, B	R	P	SHA
RBR71#324R0%&	324.0	1/8	L, U	T, Q, A, B	R	P	SHA
RBR71#328R0%&	328.0	1/8	L, U	T, Q, A, B	R	P	SHA
RBR71#332R0%&	332.0	1/8	L, U	T, Q, A, B	R	P	SHA
RBR71#336R0%&	336.0	1/8	L, U	T, Q, A, B	R	P	SHA
RBR71#340R0%&	340.0	1/8	L, U	T, Q, A, B	R	P	SHA
RBR71#344R0%&	344.0	1/8	L, U	T, Q, A, B	R	P	SHA
RBR71#348R0%&	348.0	1/8	L, U	T, Q, A, B	R	P	SHA
RBR71#352R0%&	352.0	1/8	L, U	T, Q, A, B	R	P	SHA
RBR71#357R0%&	357.0	1/8	L, U	T, Q, A, B	R	P	SHA
RBR71#361R0%&	361.0	1/8	L, U	T, Q, A, B	R	P	SHA
	Resistance	Power	Terminal	Resistance	Level 1	Level 2	
Part Number	Value (Ohms)	Rating (W)	Characteristic (#)	Tolerance (%)	(FRL)(&)	(FRL)(&)	Manufacturer
RBR71#365R0%&	365.0	1/8	L, U	T, Q, A, B	R	P	SHA
RBR71#370R0%&	370.0	1/8	L, U	T, Q, A, B	R	P	SHA
RBR71#374R0%&	374.0	1/8	L, U	T, Q, A, B	R	P	SHA
RBR71#379R0%&	379.0	1/8	L, U	T, Q, A, B	R	P	SHA
RBR71#383R0%&	383.0	1/8	L, U	T, Q, A, B	R	P	SHA
RBR71#388R0%&	388.0	1/8	L, U	T, Q, A, B	R	P	SHA
RBR71#392R0%&	392.0	1/8	L, U	T, Q, A, B	R	P	SHA
RBR71#397R0%&	397.0	1/8	L, U	T, Q, A, B	R	P	SHA
RBR71#402R0%&	402.0	1/8	L, U	T, Q, A, B	R	P	SHA
RBR71#407R0%&	407.0	1/8	L, U	T, Q, A, B	R	P	SHA
RBR71#412R0%&	412.0	1/8	L, U	T, Q, A, B	R	P	SHA
RBR71#417R0%&	417.0	1/8	L, U	T, Q, A, B	R	P	SHA
RBR71#422R0%&	422.0	1/8	L, U	T, Q, A, B	R	P	SHA
RBR71#427R0%&	427.0	1/8	L, U	T, Q, A, B	R	P	SHA
	Resistance	Power	Terminal	Resistance	Level 1	Level 2	
Part Number	Value (Ohms)	Rating (W)	Characteristic (#)	Tolerance (%)	(FRL)(&)	(FRL)(&)	Manufacturer
RBR71#432R0%&	432.0	1/8	L, U	T, Q, A, B	R	P	SHA
RBR71#437R0%&	437.0	1/8	L, U	T, Q, A, B	R	P	SHA
RBR71#442R0%&	442.0	1/8	L, U	T, Q, A, B	R	P	SHA
RBR71#448R0%&	448.0	1/8	L, U	T, Q, A, B	R	P	SHA
RBR71#453R0%&	453.0	1/8	L, U	T, Q, A, B	R	P	SHA
RBR71#459R0%&	459.0	1/8	L, U	T, Q, A, B	R	P	SHA
RBR71#464R0%&	464.0	1/8	L, U	T, Q, A, B	R	P	SHA
RBR71#470R0%&	470.0	1/8	L, U	T, Q, A, B	R	P	SHA
RBR71#475R0%&	475.0	1/8	L, U	T, Q, A, B	R	P	SHA

RBR71#481R0%&	481.0	1/8	L, U	T, Q, A, B	R	P	SHA
RBR71#487R0%&	487.0	1/8	L, U	T, Q, A, B	R	P	SHA
RBR71#493R0%&	493.0	1/8	L, U	T, Q, A, B	R	P	SHA
RBR71#499R0%&	499.0	1/8	L, U	T, Q, A, B	R	P	SHA
RBR71#505R0%&	505.0	1/8	L, U	T, Q, A, B	R	P	SHA
	Resistance	Power	Terminal	Resistance	Level 1	Level 2	
Part Number	Value (Ohms)	Rating (W)	Characteristic (#)	Tolerance (%)	(FRL)(&)	(FRL)(&)	Manufacturer
RBR71#511R0%&	511.0	1/8	L, U	T, Q, A, B	R	P	SHA
RBR71#517R0%&	517.0	1/8	L, U	T, Q, A, B	R	P	SHA
RBR71#523R0%&	523.0	1/8	L, U	T, Q, A, B	R	P	SHA
RBR71#530R0%&	530.0	1/8	L, U	T, Q, A, B	R	P	SHA
RBR71#536R0%&	536.0	1/8	L, U	T, Q, A, B	R	P	SHA
RBR71#542R0%&	542.0	1/8	L, U	T, Q, A, B	R	P	SHA
RBR71#549R0%&	549.0	1/8	L, U	T, Q, A, B	R	P	SHA
RBR71#556R0%&	556.0	1/8	L, U	T, Q, A, B	R	P	SHA
RBR71#562R0%&	562.0	1/8	L, U	T, Q, A, B	R	P	SHA
RBR71#569R0%&	569.0	1/8	L, U	T, Q, A, B	R	P	SHA
RBR71#576R0%&	576.0	1/8	L, U	T, Q, A, B	R	P	SHA
RBR71#583R0%&	583.0	1/8	L, U	T, Q, A, B	R	P	SHA
RBR71#590R0%&	590.0	1/8	L, U	T, Q, A, B	R	P	SHA
RBR71#597R0%&	597.0	1/8	L, U	T, Q, A, B	R	P	SHA
	Resistance	Power	Terminal	Resistance	Level 1	Level 2	
Part Number	Value (Ohms)	Rating (W)	Characteristic (#)	Tolerance (%)	(FRL)(&)	(FRL)(&)	Manufacturer
RBR71#604R0%&	604.0	1/8	L, U	T, Q, A, B	R	P	SHA
RBR71#612R0%&	612.0	1/8	L, U	T, Q, A, B	R	P	SHA
RBR71#619R0%&	619.0	1/8	L, U	T, Q, A, B	R	P	SHA
RBR71#626R0%&	626.0	1/8	L, U	T, Q, A, B	R	P	SHA
RBR71#634R0%&	634.0	1/8	L, U	T, Q, A, B	R	P	SHA
RBR71#642R0%&	642.0	1/8	L, U	T, Q, A, B	R	P	SHA
RBR71#649R0%&	649.0	1/8	L, U	T, Q, A, B	R	P	SHA
RBR71#657R0%&	657.0	1/8	L, U	T, Q, A, B	R	P	SHA
RBR71#665R0%&	665.0	1/8	L, U	T, Q, A, B	R	P	SHA
RBR71#673R0%&	673.0	1/8	L, U	T, Q, A, B	R	P	SHA
RBR71#681R0%&	681.0	1/8	L, U	T, Q, A, B	R	P	SHA
RBR71#690R0%&	690.0	1/8	L, U	T, Q, A, B	R	P	SHA
RBR71#698R0%&	698.0	1/8	L, U	T, Q, A, B	R	P	SHA
RBR71#706R0%&	706.0	1/8	L, U	T, Q, A, B	R	P	SHA
	Resistance	Power	Terminal	Resistance	Level 1	Level 2	
Part Number	Value (Ohms)	Rating (W)	Characteristic (#)	Tolerance (%)	(FRL)(&)	(FRL)(&)	Manufacturer
RBR71#715R0%&	715.0	1/8	L, U	T, Q, A, B	R	P	SHA
RBR71#723R0%&	723.0	1/8	L, U	T, Q, A, B	R	P	SHA
RBR71#732R0%&	732.0	1/8	L, U	T, Q, A, B	R	P	SHA
RBR71#741R0%&	741.0	1/8	L, U	T, Q, A, B	R	P	SHA
RBR71#750R0%&	750.0	1/8	L, U	T, Q, A, B	R	P	SHA
RBR71#759R0%&	759.0	1/8	L, U	T, Q, A, B	R	P	SHA
RBR71#768R0%&	768.0	1/8	L, U	T, Q, A, B	R	P	SHA
RBR71#777R0%&	777.0	1/8	L, U	T, Q, A, B	R	P	SHA

RBR71#787R0%&	787.0	1/8	L, U	T, Q, A, B	R	P	SHA
RBR71#796R0%&	796.0	1/8	L, U	T, Q, A, B	R	P	SHA
RBR71#806R0%&	806.0	1/8	L, U	T, Q, A, B	R	P	SHA
RBR71#816R0%&	816.0	1/8	L, U	T, Q, A, B	R	P	SHA
	Resistance	Power	Terminal	Resistance	Level 1	Level 2	
Part Number	Value (Ohms)	Rating (W)	Characteristic (#)	Tolerance (%)	(FRL)(&)	(FRL)(&)	Manufacturer
RBR71#825R0%&	825.0	1/8	L, U	T, Q, A, B	R	P	SHA
RBR71#835R0%&	835.0	1/8	L, U	T, Q, A, B	R	P	SHA
RBR71#845R0%&	845.0	1/8	L, U	T, Q, A, B	R	P	SHA
RBR71#856R0%&	856.0	1/8	L, U	T, Q, A, B	R	P	SHA
RBR71#866R0%&	866.0	1/8	L, U	T, Q, A, B	R	P	SHA
RBR71#876R0%&	876.0	1/8	L, U	T, Q, A, B	R	P	SHA
RBR71#887R0%&	887.0	1/8	L, U	T, Q, A, B	R	P	SHA
RBR71#898R0%&	898.0	1/8	L, U	T, Q, A, B	R	P	SHA
RBR71#909R0%&	909.0	1/8	L, U	T, Q, A, B	R	P	SHA
RBR71#920R0%&	920.0	1/8	L, U	T, Q, A, B	R	P	SHA
RBR71#931R0%&	931.0	1/8	L, U	T, Q, A, B	R	P	SHA
RBR71#942R0%&	942.0	1/8	L, U	T, Q, A, B	R	P	SHA
RBR71#953R0%&	953.0	1/8	L, U	T, Q, A, B	R	P	SHA
RBR71#965R0%&	965.0	1/8	L, U	T, Q, A, B	R	P	SHA
	Resistance	Power	Terminal	Resistance	Level 1	Level 2	
Part Number	Value (Ohms)	Rating (W)	Characteristic (#)	Tolerance (%)	(FRL)(&)	(FRL)(&)	Manufacturer
RBR71#976R0%&	976.0	1/8	L, U	T, Q, A, B	R	P	SHA
RBR71#988R0%&	988.0	1/8	L, U	T, Q, A, B	R	P	SHA

RBR71 Wirewound Resistors: 1,000 Ohms through 9,880 Ohms

	Resistance	Power	Terminal	Resistance	Level 1	Level 2	
Part Number	Value (Ohms)	Rating (W)	Characteristic (#)	Tolerance (%)	(FRL)(&)	(FRL)(&)	Manufacturer
RBR71#10000%&	1,000	1/8	L, U	T, Q, A, B	R	P	SHA
RBR71#10100%&	1,010	1/8	L, U	T, Q, A, B	R	P	SHA
RBR71#10200%&	1,020	1/8	L, U	T, Q, A, B	R	P	SHA
RBR71#10400%&	1,040	1/8	L, U	T, Q, A, B	R	P	SHA
RBR71#10500%&	1,050	1/8	L, U	T, Q, A, B	R	P	SHA
RBR71#10600%&	1,060	1/8	L, U	T, Q, A, B	R	P	SHA
RBR71#10700%&	1,070	1/8	L, U	T, Q, A, B	R	P	SHA
RBR71#10900%&	1,090	1/8	L, U	T, Q, A, B	R	P	SHA
RBR71#11000%&	1,100	1/8	L, U	T, Q, A, B	R	P	SHA
RBR71#11100%&	1,110	1/8	L, U	T, Q, A, B	R	P	SHA
RBR71#11300%&	1,130	1/8	L, U	T, Q, A, B	R	P	SHA
RBR71#11400%&	1,140	1/8	L, U	T, Q, A, B	R	P	SHA
RBR71#11500%&	1,150	1/8	L, U	T, Q, A, B	R	P	SHA
RBR71#11700%&	1,170	1/8	L, U	T, Q, A, B	R	P	SHA
	Resistance	Power	Terminal	Resistance	Level 1	Level 2	
Part Number	Value (Ohms)	Rating (W)	Characteristic (#)	Tolerance (%)	(FRL)(&)	(FRL)(&)	Manufacturer

RBR71#11800%&	1,180	1/8	L, U	T, Q, A, B	R	P	SHA
RBR71#12000%&	1,200	1/8	L, U	T, Q, A, B	R	P	SHA
RBR71#12100%&	1,210	1/8	L, U	T, Q, A, B	R	P	SHA
RBR71#12300%&	1,230	1/8	L, U	T, Q, A, B	R	P	SHA
RBR71#12400%&	1,240	1/8	L, U	T, Q, A, B	R	P	SHA
RBR71#12600%&	1,260	1/8	L, U	T, Q, A, B	R	P	SHA
RBR71#12700%&	1,270	1/8	L, U	T, Q, A, B	R	P	SHA
RBR71#12900%&	1,290	1/8	L, U	T, Q, A, B	R	P	SHA
RBR71#13000%&	1,300	1/8	L, U	T, Q, A, B	R	P	SHA
RBR71#13200%&	1,320	1/8	L, U	T, Q, A, B	R	P	SHA
RBR71#13300%&	1,330	1/8	L, U	T, Q, A, B	R	P	SHA
RBR71#13500%&	1,350	1/8	L, U	T, Q, A, B	R	P	SHA
RBR71#13700%&	1,370	1/8	L, U	T, Q, A, B	R	P	SHA
RBR71#13800%&	1,380	1/8	L, U	T, Q, A, B	R	P	SHA
	Resistance	Power	Terminal	Resistance	Level 1	Level 2	
Part Number	Value (Ohms)	Rating (W)	Characteristic (#)	Tolerance (%)	(FRL)(&)	(FRL)(&)	Manufacturer
RBR71#14000%&	1,400	1/8	L, U	T, Q, A, B	R	P	SHA
RBR71#14200%&	1,420	1/8	L, U	T, Q, A, B	R	P	SHA
RBR71#14300%&	1,430	1/8	L, U	T, Q, A, B	R	P	SHA
RBR71#14500%&	1,450	1/8	L, U	T, Q, A, B	R	P	SHA
RBR71#14700%&	1,470	1/8	L, U	T, Q, A, B	R	P	SHA
RBR71#14900%&	1,490	1/8	L, U	T, Q, A, B	R	P	SHA
RBR71#15000%&	1,500	1/8	L, U	T, Q, A, B	R	P	SHA
RBR71#15200%&	1,520	1/8	L, U	T, Q, A, B	R	P	SHA
RBR71#15400%&	1,540	1/8	L, U	T, Q, A, B	R	P	SHA
RBR71#15600%&	1,560	1/8	L, U	T, Q, A, B	R	P	SHA
RBR71#15800%&	1,580	1/8	L, U	T, Q, A, B	R	P	SHA
RBR71#16000%&	1,600	1/8	L, U	T, Q, A, B	R	P	SHA
	Resistance	Power	Terminal	Resistance	Level 1	Level 2	
Part Number	Value (Ohms)	Rating (W)	Characteristic (#)	Tolerance (%)	(FRL)(&)	(FRL)(&)	Manufacturer
RBR71#16200%&	1,620	1/8	L, U	T, Q, A, B	R	P	SHA
RBR71#16400%&	1,640	1/8	L, U	T, Q, A, B	R	P	SHA
RBR71#16500%&	1,650	1/8	L, U	T, Q, A, B	R	P	SHA
RBR71#16700%&	1,670	1/8	L, U	T, Q, A, B	R	P	SHA
RBR71#16900%&	1,690	1/8	L, U	T, Q, A, B	R	P	SHA
RBR71#17200%&	1,720	1/8	L, U	T, Q, A, B	R	P	SHA
RBR71#17400%&	1,740	1/8	L, U	T, Q, A, B	R	P	SHA
RBR71#17600%&	1,760	1/8	L, U	T, Q, A, B	R	P	SHA
RBR71#17800%&	1,780	1/8	L, U	T, Q, A, B	R	P	SHA
RBR71#18000%&	1,800	1/8	L, U	T, Q, A, B	R	P	SHA
RBR71#18200%&	1,820	1/8	L, U	T, Q, A, B	R	P	SHA
RBR71#18400%&	1,840	1/8	L, U	T, Q, A, B	R	P	SHA
RBR71#18700%&	1,870	1/8	L, U	T, Q, A, B	R	P	SHA
RBR71#18900%&	1,890	1/8	L, U	T, Q, A, B	R	P	SHA
	Resistance	Power	Terminal	Resistance	Level 1	Level 2	
Part Number	Value (Ohms)	Rating (W)	Characteristic (#)	Tolerance (%)	(FRL)(&)	(FRL)(&)	Manufacturer
RBR71#19100%&	1,910	1/8	L, U	T, Q, A, B	R	P	SHA

RBR71#19300%&	1,930	1/8	L, U	T, Q, A, B	R	P	SHA
RBR71#19600%&	1,960	1/8	L, U	T, Q, A, B	R	P	SHA
RBR71#19800%&	1,980	1/8	L, U	T, Q, A, B	R	P	SHA
RBR71#20000%&	2,000	1/8	L, U	T, Q, A, B	R	P	SHA
RBR71#20300%&	2,030	1/8	L, U	T, Q, A, B	R	P	SHA
RBR71#20500%&	2,050	1/8	L, U	T, Q, A, B	R	P	SHA
RBR71#20800%&	2,080	1/8	L, U	T, Q, A, B	R	P	SHA
RBR71#21000%&	2,100	1/8	L, U	T, Q, A, B	R	P	SHA
RBR71#21300%&	2,130	1/8	L, U	T, Q, A, B	R	P	SHA
RBR71#21500%&	2,150	1/8	L, U	T, Q, A, B	R	P	SHA
RBR71#21800%&	2,180	1/8	L, U	T, Q, A, B	R	P	SHA
RBR71#22100%&	2,210	1/8	L, U	T, Q, A, B	R	P	SHA
RBR71#22300%&	2,230	1/8	L, U	T, Q, A, B	R	P	SHA
	Resistance	Power	Terminal	Resistance	Level 1	Level 2	
Part Number	Value (Ohms)	Rating (W)	Characteristic (#)	Tolerance (%)	(FRL)(&)	(FRL)(&)	Manufacturer
RBR71#22600%&	2,260	1/8	L, U	T, Q, A, B	R	P	SHA
RBR71#22900%&	2,290	1/8	L, U	T, Q, A, B	R	P	SHA
RBR71#23200%&	2,320	1/8	L, U	T, Q, A, B	R	P	SHA
RBR71#23400%&	2,340	1/8	L, U	T, Q, A, B	R	P	SHA
RBR71#23700%&	2,370	1/8	L, U	T, Q, A, B	R	P	SHA
RBR71#24000%&	2,400	1/8	L, U	T, Q, A, B	R	P	SHA
RBR71#24300%&	2,430	1/8	L, U	T, Q, A, B	R	P	SHA
RBR71#24600%&	2,460	1/8	L, U	T, Q, A, B	R	P	SHA
RBR71#24900%&	2,490	1/8	L, U	T, Q, A, B	R	P	SHA
RBR71#25200%&	2,520	1/8	L, U	T, Q, A, B	R	P	SHA
RBR71#25500%&	2,550	1/8	L, U	T, Q, A, B	R	P	SHA
RBR71#25800%&	2,580	1/8	L, U	T, Q, A, B	R	P	SHA
RBR71#26100%&	2,610	1/8	L, U	T, Q, A, B	R	P	SHA
RBR71#26400%&	2,640	1/8	L, U	T, Q, A, B	R	P	SHA
	Resistance	Power	Terminal	Resistance	Level 1	Level 2	
Part Number	Value (Ohms)	Rating (W)	Characteristic (#)	Tolerance (%)	(FRL)(&)	(FRL)(&)	Manufacturer
RBR71#26700%&	2,670	1/8	L, U	T, Q, A, B	R	P	SHA
RBR71#27100%&	2,710	1/8	L, U	T, Q, A, B	R	P	SHA
RBR71#27400%&	2,740	1/8	L, U	T, Q, A, B	R	P	SHA
RBR71#27700%&	2,770	1/8	L, U	T, Q, A, B	R	P	SHA
RBR71#28000%&	2,800	1/8	L, U	T, Q, A, B	R	P	SHA
RBR71#28400%&	2,840	1/8	L, U	T, Q, A, B	R	P	SHA
RBR71#28700%&	2,870	1/8	L, U	T, Q, A, B	R	P	SHA
RBR71#29100%&	2,910	1/8	L, U	T, Q, A, B	R	P	SHA
RBR71#29400%&	2,940	1/8	L, U	T, Q, A, B	R	P	SHA
RBR71#29800%&	2,980	1/8	L, U	T, Q, A, B	R	P	SHA
RBR71#30100%&	3,010	1/8	L, U	T, Q, A, B	R	P	SHA
RBR71#30500%&	3,050	1/8	L, U	T, Q, A, B	R	P	SHA
RBR71#30900%&	3,090	1/8	L, U	T, Q, A, B	R	P	SHA
RBR71#31200%&	3,120	1/8	L, U	T, Q, A, B	R	P	SHA
	Resistance	Power	Terminal	Resistance	Level 1	Level 2	
Part Number	Value (Ohms)	Rating (W)	Characteristic (#)	Tolerance (%)	(FRL)(&)	(FRL)(&)	Manufacturer

RBR71#31600%&	3,160	1/8	L, U	T, Q, A, B	R	P	SHA
RBR71#32000%&	3,200	1/8	L, U	T, Q, A, B	R	P	SHA
RBR71#32400%&	3,240	1/8	L, U	T, Q, A, B	R	P	SHA
RBR71#32800%&	3,280	1/8	L, U	T, Q, A, B	R	P	SHA
RBR71#33200%&	3,320	1/8	L, U	T, Q, A, B	R	P	SHA
RBR71#33600%&	3,360	1/8	L, U	T, Q, A, B	R	P	SHA
RBR71#34000%&	3,400	1/8	L, U	T, Q, A, B	R	P	SHA
RBR71#34400%&	3,440	1/8	L, U	T, Q, A, B	R	P	SHA
RBR71#34800%&	3,480	1/8	L, U	T, Q, A, B	R	P	SHA
RBR71#35200%&	3,520	1/8	L, U	T, Q, A, B	R	P	SHA
RBR71#35700%&	3,570	1/8	L, U	T, Q, A, B	R	P	SHA
RBR71#36100%&	3,610	1/8	L, U	T, Q, A, B	R	P	SHA
	Resistance	Power	Terminal	Resistance	Level 1	Level 2	
Part Number	Value (Ohms)	Rating (W)	Characteristic (#)	Tolerance (%)	(FRL)(&)	(FRL)(&)	Manufacturer
RBR71#36500%&	3,650	1/8	L, U	T, Q, A, B	R	P	SHA
RBR71#37000%&	3,700	1/8	L, U	T, Q, A, B	R	P	SHA
RBR71#37400%&	3,740	1/8	L, U	T, Q, A, B	R	P	SHA
RBR71#37900%&	3,790	1/8	L, U	T, Q, A, B	R	P	SHA
RBR71#38300%&	3,830	1/8	L, U	T, Q, A, B	R	P	SHA
RBR71#38800%&	3,880	1/8	L, U	T, Q, A, B	R	P	SHA
RBR71#39200%&	3,920	1/8	L, U	T, Q, A, B	R	P	SHA
RBR71#39700%&	3,970	1/8	L, U	T, Q, A, B	R	P	SHA
RBR71#40200%&	4,020	1/8	L, U	T, Q, A, B	R	P	SHA
RBR71#40700%&	4,070	1/8	L, U	T, Q, A, B	R	P	SHA
RBR71#41200%&	4,120	1/8	L, U	T, Q, A, B	R	P	SHA
RBR71#41700%&	4,170	1/8	L, U	T, Q, A, B	R	P	SHA
RBR71#42200%&	4,220	1/8	L, U	T, Q, A, B	R	P	SHA
RBR71#42700%&	4,270	1/8	L, U	T, Q, A, B	R	P	SHA
	Resistance	Power	Terminal	Resistance	Level 1	Level 2	
Part Number	Value (Ohms)	Rating (W)	Characteristic (#)	Tolerance (%)	(FRL)(&)	(FRL)(&)	Manufacturer
RBR71#43200%&	4,320	1/8	L, U	T, Q, A, B	R	P	SHA
RBR71#43700%&	4,370	1/8	L, U	T, Q, A, B	R	P	SHA
RBR71#44200%&	4,420	1/8	L, U	T, Q, A, B	R	P	SHA
RBR71#44800%&	4,480	1/8	L, U	T, Q, A, B	R	P	SHA
RBR71#45300%&	4,530	1/8	L, U	T, Q, A, B	R	P	SHA
RBR71#45900%&	4,590	1/8	L, U	T, Q, A, B	R	P	SHA
RBR71#46400%&	4,640	1/8	L, U	T, Q, A, B	R	P	SHA
RBR71#47000%&	4,700	1/8	L, U	T, Q, A, B	R	P	SHA
RBR71#47500%&	4,750	1/8	L, U	T, Q, A, B	R	P	SHA
RBR71#48100%&	4,810	1/8	L, U	T, Q, A, B	R	P	SHA
RBR71#48700%&	4,870	1/8	L, U	T, Q, A, B	R	P	SHA
RBR71#49300%&	4,930	1/8	L, U	T, Q, A, B	R	P	SHA
RBR71#49900%&	4,990	1/8	L, U	T, Q, A, B	R	P	SHA
RBR71#50500%&	5,050	1/8	L, U	T, Q, A, B	R	P	SHA
	Resistance	Power	Terminal	Resistance	Level 1	Level 2	
Part Number	Value (Ohms)	Rating (W)	Characteristic (#)	Tolerance (%)	(FRL)(&)	(FRL)(&)	Manufacturer
RBR71#51100%&	5,110	1/8	L, U	T, Q, A, B	R	P	SHA

RBR71#51700%&	5,170	1/8	L, U	T, Q, A, B	R	P	SHA
RBR71#52300%&	5,230	1/8	L, U	T, Q, A, B	R	P	SHA
RBR71#53000%&	5,300	1/8	L, U	T, Q, A, B	R	P	SHA
RBR71#53600%&	5,360	1/8	L, U	T, Q, A, B	R	P	SHA
RBR71#54200%&	5,420	1/8	L, U	T, Q, A, B	R	P	SHA
RBR71#54900%&	5,490	1/8	L, U	T, Q, A, B	R	P	SHA
RBR71#55600%&	5,560	1/8	L, U	T, Q, A, B	R	P	SHA
RBR71#56200%&	5,620	1/8	L, U	T, Q, A, B	R	P	SHA
RBR71#56900%&	5,690	1/8	L, U	T, Q, A, B	R	P	SHA
RBR71#57600%&	5,760	1/8	L, U	T, Q, A, B	R	P	SHA
RBR71#58300%&	5,830	1/8	L, U	T, Q, A, B	R	P	SHA
RBR71#59000%&	5,900	1/8	L, U	T, Q, A, B	R	P	SHA
RBR71#59700%&	5,970	1/8	L, U	T, Q, A, B	R	P	SHA
	Resistance	Power	Terminal	Resistance	Level 1	Level 2	
Part Number	Value (Ohms)	Rating (W)	Characteristic (#)	Tolerance (%)	(FRL)(&)	(FRL)(&)	Manufacturer
RBR71#60400%&	6,040	1/8	L, U	T, Q, A, B	R	P	SHA
RBR71#61200%&	6,120	1/8	L, U	T, Q, A, B	R	P	SHA
RBR71#61900%&	6,190	1/8	L, U	T, Q, A, B	R	P	SHA
RBR71#62600%&	6,260	1/8	L, U	T, Q, A, B	R	P	SHA
RBR71#63400%&	6,340	1/8	L, U	T, Q, A, B	R	P	SHA
RBR71#64200%&	6,420	1/8	L, U	T, Q, A, B	R	P	SHA
RBR71#64900%&	6,490	1/8	L, U	T, Q, A, B	R	P	SHA
RBR71#65700%&	6,570	1/8	L, U	T, Q, A, B	R	P	SHA
RBR71#66500%&	6,650	1/8	L, U	T, Q, A, B	R	P	SHA
RBR71#67300%&	6,730	1/8	L, U	T, Q, A, B	R	P	SHA
RBR71#68100%&	6,810	1/8	L, U	T, Q, A, B	R	P	SHA
RBR71#69000%&	6,900	1/8	L, U	T, Q, A, B	R	P	SHA
RBR71#69800%&	6,980	1/8	L, U	T, Q, A, B	R	P	SHA
RBR71#70600%&	7,060	1/8	L, U	T, Q, A, B	R	P	SHA
	Resistance	Power	Terminal	Resistance	Level 1	Level 2	
Part Number	Value (Ohms)	Rating (W)	Characteristic (#)	Tolerance (%)	(FRL)(&)	(FRL)(&)	Manufacturer
RBR71#71500%&	7,150	1/8	L, U	T, Q, A, B	R	P	SHA
RBR71#72300%&	7,230	1/8	L, U	T, Q, A, B	R	P	SHA
RBR71#73200%&	7,320	1/8	L, U	T, Q, A, B	R	P	SHA
RBR71#74100%&	7,410	1/8	L, U	T, Q, A, B	R	P	SHA
RBR71#75000%&	7,500	1/8	L, U	T, Q, A, B	R	P	SHA
RBR71#75900%&	7,590	1/8	L, U	T, Q, A, B	R	P	SHA
RBR71#76800%&	7,680	1/8	L, U	T, Q, A, B	R	P	SHA
RBR71#77700%&	7,770	1/8	L, U	T, Q, A, B	R	P	SHA
RBR71#78700%&	7,870	1/8	L, U	T, Q, A, B	R	P	SHA
RBR71#79600%&	7,960	1/8	L, U	T, Q, A, B	R	P	SHA
RBR71#80600%&	8,060	1/8	L, U	T, Q, A, B	R	P	SHA
RBR71#81600%&	8,160	1/8	L, U	T, Q, A, B	R	P	SHA
	Resistance	Power	Terminal	Resistance	Level 1	Level 2	
Part Number	Value (Ohms)	Rating (W)	Characteristic (#)	Tolerance (%)	(FRL)(&)	(FRL)(&)	Manufacturer
RBR71#82500%&	8,250	1/8	L, U	T, Q, A, B	R	P	SHA
RBR71#83500%&	8,350	1/8	L, U	T, Q, A, B	R	P	SHA

RBR71#84500%&	8,450	1/8	L, U	T, Q, A, B	R	P	SHA
RBR71#85600%&	8,560	1/8	L, U	T, Q, A, B	R	P	SHA
RBR71#86600%&	8,660	1/8	L, U	T, Q, A, B	R	P	SHA
RBR71#87600%&	8,760	1/8	L, U	T, Q, A, B	R	P	SHA
RBR71#88700%&	8,870	1/8	L, U	T, Q, A, B	R	P	SHA
RBR71#89800%&	8,980	1/8	L, U	T, Q, A, B	R	P	SHA
RBR71#90900%&	9,090	1/8	L, U	T, Q, A, B	R	P	SHA
RBR71#92000%&	9,190	1/8	L, U	T, Q, A, B	R	P	SHA
RBR71#93100%&	9,310	1/8	L, U	T, Q, A, B	R	P	SHA
RBR71#94200%&	9,420	1/8	L, U	T, Q, A, B	R	P	SHA
RBR71#95300%&	9,530	1/8	L, U	T, Q, A, B	R	P	SHA
RBR71#96500%&	9,650	1/8	L, U	T, Q, A, B	R	P	SHA
	Resistance	Power	Terminal	Resistance	Level 1	Level 2	
Part Number	Value (Ohms)	Rating (W)	Characteristic (#)	Tolerance (%)	(FRL)(&)	(FRL)(&)	Manufacturer
RBR71#97600%&	9,760	1/8	L, U	T, Q, A, B	R	P	SHA
RBR71#98800%&	9,880	1/8	L, U	T, Q, A, B	R	P	SHA

RBR71 Wirewound Resistors: 10,000 Ohms through 98,800 Ohms

	Resistance	Power	Terminal	Resistance	Level 1	Level 2	
Part Number	Value (Ohms)	Rating (W)	Characteristic (#)	Tolerance (%)	(FRL)(&)	(FRL)(&)	Manufacturer
RBR71#10001%&	10,000	1/8	L, U	T, Q, A, B	R	P	SHA
RBR71#10101%&	10,100	1/8	L, U	T, Q, A, B	R	P	SHA
RBR71#10201%&	10,200	1/8	L, U	T, Q, A, B	R	P	SHA
RBR71#10401%&	10,400	1/8	L, U	T, Q, A, B	R	P	SHA
RBR71#10501%&	10,500	1/8	L, U	T, Q, A, B	R	P	SHA
RBR71#10601%&	10,600	1/8	L, U	T, Q, A, B	R	P	SHA
RBR71#10701%&	10,700	1/8	L, U	T, Q, A, B	R	P	SHA
RBR71#10901%&	10,900	1/8	L, U	T, Q, A, B	R	P	SHA
RBR71#11001%&	11,000	1/8	L, U	T, Q, A, B	R	P	SHA
RBR71#11101%&	11,100	1/8	L, U	T, Q, A, B	R	P	SHA
RBR71#11301%&	11,300	1/8	L, U	T, Q, A, B	R	P	SHA
RBR71#11401%&	11,400	1/8	L, U	T, Q, A, B	R	P	SHA
RBR71#11501%&	11,500	1/8	L, U	T, Q, A, B	R	P	SHA
RBR71#11701%&	11,700	1/8	L, U	T, Q, A, B	R	P	SHA
RBR71#11801%&	11,800	1/8	L, U	T, Q, A, B	R	P	SHA
	Resistance	Power	Terminal	Resistance	Level 1	Level 2	
Part Number	Value (Ohms)	Rating (W)	Characteristic (#)	Tolerance (%)	(FRL)(&)	(FRL)(&)	Manufacturer
RBR71#12001%&	12,000	1/8	L, U	T, Q, A, B	R	P	SHA
RBR71#12101%&	12,100	1/8	L, U	T, Q, A, B	R	P	SHA
RBR71#12301%&	12,300	1/8	L, U	T, Q, A, B	R	P	SHA
RBR71#12401%&	12,400	1/8	L, U	T, Q, A, B	R	P	SHA
RBR71#12601%&	12,600	1/8	L, U	T, Q, A, B	R	P	SHA
RBR71#12701%&	12,700	1/8	L, U	T, Q, A, B	R	P	SHA
RBR71#12901%&	12,900	1/8	L, U	T, Q, A, B	R	P	SHA

RBR71#13001%&	13,000	1/8	L, U	T, Q, A, B	R	P	SHA
RBR71#13201%&	13,200	1/8	L, U	T, Q, A, B	R	P	SHA
RBR71#13301%&	13,300	1/8	L, U	T, Q, A, B	R	P	SHA
RBR71#13501%&	13,500	1/8	L, U	T, Q, A, B	R	P	SHA
RBR71#13701%&	13,700	1/8	L, U	T, Q, A, B	R	P	SHA
	Resistance	Power	Terminal	Resistance	Level 1	Level 2	
Part Number	Value (Ohms)	Rating (W)	Characteristic (#)	Tolerance (%)	(FRL)(&)	(FRL)(&)	Manufacturer
RBR71#13801%&	13,800	1/8	L, U	T, Q, A, B	R	P	SHA
RBR71#14001%&	14,000	1/8	L, U	T, Q, A, B	R	P	SHA
RBR71#14201%&	14,200	1/8	L, U	T, Q, A, B	R	P	SHA
RBR71#14301%&	14,300	1/8	L, U	T, Q, A, B	R	P	SHA
RBR71#14501%&	14,500	1/8	L, U	T, Q, A, B	R	P	SHA
RBR71#14701%&	14,700	1/8	L, U	T, Q, A, B	R	P	SHA
RBR71#14901%&	14,900	1/8	L, U	T, Q, A, B	R	P	SHA
RBR71#15001%&	15,000	1/8	L, U	T, Q, A, B	R	P	SHA
RBR71#15201%&	15,200	1/8	L, U	T, Q, A, B	R	P	SHA
RBR71#15401%&	15,400	1/8	L, U	T, Q, A, B	R	P	SHA
RBR71#15601%&	15,600	1/8	L, U	T, Q, A, B	R	P	SHA
RBR71#15801%&	15,800	1/8	L, U	T, Q, A, B	R	P	SHA
RBR71#16001%&	16,000	1/8	L, U	T, Q, A, B	R	P	SHA
RBR71#16201%&	16,200	1/8	L, U	T, Q, A, B	R	P	SHA
	Resistance	Power	Terminal	Resistance	Level 1	Level 2	
Part Number	Value (Ohms)	Rating (W)	Characteristic (#)	Tolerance (%)	(FRL)(&)	(FRL)(&)	Manufacturer
RBR71#16401%&	16,400	1/8	L, U	T, Q, A, B	R	P	SHA
RBR71#16501%&	16,500	1/8	L, U	T, Q, A, B	R	P	SHA
RBR71#16701%&	16,700	1/8	L, U	T, Q, A, B	R	P	SHA
RBR71#16901%&	16,900	1/8	L, U	T, Q, A, B	R	P	SHA
RBR71#17201%&	17,200	1/8	L, U	T, Q, A, B	R	P	SHA
RBR71#17401%&	17,400	1/8	L, U	T, Q, A, B	R	P	SHA
RBR71#17601%&	17,600	1/8	L, U	T, Q, A, B	R	P	SHA
RBR71#17801%&	17,800	1/8	L, U	T, Q, A, B	R	P	SHA
RBR71#18001%&	18,000	1/8	L, U	T, Q, A, B	R	P	SHA
RBR71#18201%&	18,200	1/8	L, U	T, Q, A, B	R	P	SHA
RBR71#18401%&	18,400	1/8	L, U	T, Q, A, B	R	P	SHA
RBR71#18701%&	18,700	1/8	L, U	T, Q, A, B	R	P	SHA
RBR71#18901%&	18,900	1/8	L, U	T, Q, A, B	R	P	SHA
RBR71#19101%&	19,100	1/8	L, U	T, Q, A, B	R	P	SHA
	Resistance	Power	Terminal	Resistance	Level 1	Level 2	
Part Number	Value (Ohms)	Rating (W)	Characteristic (#)	Tolerance (%)	(FRL)(&)	(FRL)(&)	Manufacturer
RBR71#19301%&	19,300	1/8	L, U	T, Q, A, B	R	P	SHA
RBR71#19601%&	19,600	1/8	L, U	T, Q, A, B	R	P	SHA
RBR71#19801%&	19,800	1/8	L, U	T, Q, A, B	R	P	SHA
RBR71#20001%&	20,000	1/8	L, U	T, Q, A, B	R	P	SHA
RBR71#20301%&	20,300	1/8	L, U	T, Q, A, B	R	P	SHA
RBR71#20501%&	20,500	1/8	L, U	T, Q, A, B	R	P	SHA
RBR71#20801%&	20,800	1/8	L, U	T, Q, A, B	R	P	SHA
RBR71#21001%&	21,000	1/8	L, U	T, Q, A, B	R	P	SHA

RBR71#21301%&	21,300	1/8	L, U	T, Q, A, B	R	P	SHA
RBR71#21501%&	21,500	1/8	L, U	T, Q, A, B	R	P	SHA
RBR71#21801%&	21,800	1/8	L, U	T, Q, A, B	R	P	SHA
RBR71#22101%&	22,100	1/8	L, U	T, Q, A, B	R	P	SHA
RBR71#22301%&	22,300	1/8	L, U	T, Q, A, B	R	P	SHA
RBR71#22601%&	22,600	1/8	L, U	T, Q, A, B	R	P	SHA
	Resistance	Power	Terminal	Resistance	Level 1	Level 2	
Part Number	Value (Ohms)	Rating (W)	Characteristic (#)	Tolerance (%)	(FRL)(&)	(FRL)(&)	Manufacturer
RBR71#22901%&	22,900	1/8	L, U	T, Q, A, B	R	P	SHA
RBR71#23201%&	23,200	1/8	L, U	T, Q, A, B	R	P	SHA
RBR71#23401%&	23,400	1/8	L, U	T, Q, A, B	R	P	SHA
RBR71#23701%&	23,700	1/8	L, U	T, Q, A, B	R	P	SHA
RBR71#24001%&	24,000	1/8	L, U	T, Q, A, B	R	P	SHA
RBR71#24301%&	24,300	1/8	L, U	T, Q, A, B	R	P	SHA
RBR71#24601%&	24,600	1/8	L, U	T, Q, A, B	R	P	SHA
RBR71#24901%&	24,900	1/8	L, U	T, Q, A, B	R	P	SHA
RBR71#25201%&	25,200	1/8	L, U	T, Q, A, B	R	P	SHA
RBR71#25501%&	25,500	1/8	L, U	T, Q, A, B	R	P	SHA
RBR71#25801%&	25,800	1/8	L, U	T, Q, A, B	R	P	SHA
RBR71#26101%&	26,100	1/8	L, U	T, Q, A, B	R	P	SHA
RBR71#26401%&	26,400	1/8	L, U	T, Q, A, B	R	P	SHA
RBR71#26701%&	26,700	1/8	L, U	T, Q, A, B	R	P	SHA
	Resistance	Power	Terminal	Resistance	Level 1	Level 2	
Part Number	Value (Ohms)	Rating (W)	Characteristic (#)	Tolerance (%)	(FRL)(&)	(FRL)(&)	Manufacturer
RBR71#27101%&	27,100	1/8	L, U	T, Q, A, B	R	P	SHA
RBR71#27401%&	27,400	1/8	L, U	T, Q, A, B	R	P	SHA
RBR71#27701%&	27,700	1/8	L, U	T, Q, A, B	R	P	SHA
RBR71#28001%&	28,000	1/8	L, U	T, Q, A, B	R	P	SHA
RBR71#28401%&	28,400	1/8	L, U	T, Q, A, B	R	P	SHA
RBR71#28701%&	28,700	1/8	L, U	T, Q, A, B	R	P	SHA
RBR71#29101%&	29,100	1/8	L, U	T, Q, A, B	R	P	SHA
RBR71#29401%&	29,400	1/8	L, U	T, Q, A, B	R	P	SHA
RBR71#29801%&	29,800	1/8	L, U	T, Q, A, B	R	P	SHA
RBR71#30101%&	30,100	1/8	L, U	T, Q, A, B	R	P	SHA
RBR71#30501%&	30,500	1/8	L, U	T, Q, A, B	R	P	SHA
RBR71#30901%&	30,900	1/8	L, U	T, Q, A, B	R	P	SHA
	Resistance	Power	Terminal	Resistance	Level 1	Level 2	
Part Number	Value (Ohms)	Rating (W)	Characteristic (#)	Tolerance (%)	(FRL)(&)	(FRL)(&)	Manufacturer
RBR71#31201%&	31,200	1/8	L, U	T, Q, A, B	R	P	SHA
RBR71#31601%&	31,600	1/8	L, U	T, Q, A, B	R	P	SHA
RBR71#32001%&	32,000	1/8	L, U	T, Q, A, B	R	P	SHA
RBR71#32401%&	32,400	1/8	L, U	T, Q, A, B	R	P	SHA
RBR71#32801%&	32,800	1/8	L, U	T, Q, A, B	R	P	SHA
RBR71#33201%&	33,200	1/8	L, U	T, Q, A, B	R	P	SHA
RBR71#33601%&	33,600	1/8	L, U	T, Q, A, B	R	P	SHA
RBR71#34001%&	34,000	1/8	L, U	T, Q, A, B	R	P	SHA
RBR71#34401%&	34,400	1/8	L, U	T, Q, A, B	R	P	SHA

RBR71#34801%&	34,800	1/8	L, U	T, Q, A, B	R	P	SHA
RBR71#35201%&	35,200	1/8	L, U	T, Q, A, B	R	P	SHA
RBR71#35701%&	35,700	1/8	L, U	T, Q, A, B	R	P	SHA
RBR71#36101%&	36,100	1/8	L, U	T, Q, A, B	R	P	SHA
RBR71#36501%&	36,500	1/8	L, U	T, Q, A, B	R	P	SHA
	Resistance	Power	Terminal	Resistance	Level 1	Level 2	
Part Number	Value (Ohms)	Rating (W)	Characteristic (#)	Tolerance (%)	(FRL)(&)	(FRL)(&)	Manufacturer
RBR71#37001%&	37,000	1/8	L, U	T, Q, A, B	R	P	SHA
RBR71#37401%&	37,400	1/8	L, U	T, Q, A, B	R	P	SHA
RBR71#37901%&	37,900	1/8	L, U	T, Q, A, B	R	P	SHA
RBR71#38301%&	38,300	1/8	L, U	T, Q, A, B	R	P	SHA
RBR71#38801%&	38,800	1/8	L, U	T, Q, A, B	R	P	SHA
RBR71#39201%&	39,200	1/8	L, U	T, Q, A, B	R	P	SHA
RBR71#39701%&	39,700	1/8	L, U	T, Q, A, B	R	P	SHA
RBR71#40201%&	40,200	1/8	L, U	T, Q, A, B	R	P	SHA
RBR71#40701%&	40,700	1/8	L, U	T, Q, A, B	R	P	SHA
RBR71#41201%&	41,200	1/8	L, U	T, Q, A, B	R	P	SHA
RBR71#41701%&	41,700	1/8	L, U	T, Q, A, B	R	P	SHA
RBR71#42201%&	42,200	1/8	L, U	T, Q, A, B	R	P	SHA
RBR71#42701%&	42,700	1/8	L, U	T, Q, A, B	R	P	SHA
RBR71#43201%&	43,200	1/8	L, U	T, Q, A, B	R	P	SHA
	Resistance	Power	Terminal	Resistance	Level 1	Level 2	
Part Number	Value (Ohms)	Rating (W)	Characteristic (#)	Tolerance (%)	(FRL)(&)	(FRL)(&)	Manufacturer
RBR71#43701%&	43,700	1/8	L, U	T, Q, A, B	R	P	SHA
RBR71#44201%&	44,200	1/8	L, U	T, Q, A, B	R	P	SHA
RBR71#44801%&	44,800	1/8	L, U	T, Q, A, B	R	P	SHA
RBR71#45301%&	45,300	1/8	L, U	T, Q, A, B	R	P	SHA
RBR71#45901%&	45,900	1/8	L, U	T, Q, A, B	R	P	SHA
RBR71#46401%&	46,400	1/8	L, U	T, Q, A, B	R	P	SHA
RBR71#47001%&	47,000	1/8	L, U	T, Q, A, B	R	P	SHA
RBR71#47501%&	47,500	1/8	L, U	T, Q, A, B	R	P	SHA
RBR71#48101%&	48,100	1/8	L, U	T, Q, A, B	R	P	SHA
RBR71#48701%&	48,700	1/8	L, U	T, Q, A, B	R	P	SHA
RBR71#49301%&	49,300	1/8	L, U	T, Q, A, B	R	P	SHA
RBR71#49901%&	49,900	1/8	L, U	T, Q, A, B	R	P	SHA
RBR71#50501%&	50,500	1/8	L, U	T, Q, A, B	R	P	SHA
RBR71#51101%&	51,100	1/8	L, U	T, Q, A, B	R	P	SHA, ULT
	Resistance	Power	Terminal	Resistance	Level 1	Level 2	
Part Number	Value (Ohms)	Rating (W)	Characteristic (#)	Tolerance (%)	(FRL)(&)	(FRL)(&)	Manufacturer
RBR71#51701%&	51,700	1/8	L, U	T, Q, A, B	R	P	SHA, ULT
RBR71#52301%&	52,300	1/8	L, U	T, Q, A, B	R	P	SHA, ULT
RBR71#53001%&	53,000	1/8	L, U	T, Q, A, B	R	P	SHA, ULT
RBR71#53601%&	53,600	1/8	L, U	T, Q, A, B	R	P	SHA, ULT
RBR71#54201%&	54,200	1/8	L, U	T, Q, A, B	R	P	SHA, ULT
RBR71#54901%&	54,900	1/8	L, U	T, Q, A, B	R	P	SHA, ULT
RBR71#55601%&	55,600	1/8	L, U	T, Q, A, B	R	P	SHA, ULT
RBR71#56201%&	56,200	1/8	L, U	T, Q, A, B	R	P	SHA, ULT

RBR71#56901%&	56,900	1/8	L, U	T, Q, A, B	R	P	SHA, ULT
RBR71#57601%&	57,600	1/8	L, U	T, Q, A, B	R	P	SHA, ULT
RBR71#58301%&	58,300	1/8	L, U	T, Q, A, B	R	P	SHA, ULT
RBR71#59001%&	59,000	1/8	L, U	T, Q, A, B	R	P	SHA, ULT
RBR71#59701%&	59,700	1/8	L, U	T, Q, A, B	R	P	SHA, ULT
RBR71#60401%&	60,400	1/8	L, U	T, Q, A, B	R	P	SHA, ULT
	Resistance	Power	Terminal	Resistance	Level 1	Level 2	
Part Number	Value (Ohms)	Rating (W)	Characteristic (#)	Tolerance (%)	(FRL)(&)	(FRL)(&)	Manufacturer
RBR71#61201%&	61,200	1/8	L, U	T, Q, A, B	R	P	SHA, ULT
RBR71#61901%&	61,900	1/8	L, U	T, Q, A, B	R	P	SHA, ULT
RBR71#62601%&	62,600	1/8	L, U	T, Q, A, B	R	P	SHA, ULT
RBR71#63401%&	63,400	1/8	L, U	T, Q, A, B	R	P	SHA, ULT
RBR71#64201%&	64,200	1/8	L, U	T, Q, A, B	R	P	SHA, ULT
RBR71#64901%&	64,900	1/8	L, U	T, Q, A, B	R	P	SHA, ULT
RBR71#65701%&	65,700	1/8	L, U	T, Q, A, B	R	P	SHA, ULT
RBR71#66501%&	66,500	1/8	L, U	T, Q, A, B	R	P	SHA, ULT
RBR71#67301%&	67,300	1/8	L, U	T, Q, A, B	R	P	SHA, ULT
RBR71#68101%&	68,100	1/8	L, U	T, Q, A, B	R	P	SHA, ULT
RBR71#69001%&	69,000	1/8	L, U	T, Q, A, B	R	P	SHA, ULT
RBR71#69801%&	69,800	1/8	L, U	T, Q, A, B	R	P	SHA, ULT
	Resistance	Power	Terminal	Resistance	Level 1	Level 2	
Part Number	Value (Ohms)	Rating (W)	Characteristic (#)	Tolerance (%)	(FRL)(&)	(FRL)(&)	Manufacturer
RBR71#70601%&	70,600	1/8	L, U	T, Q, A, B	R	P	SHA, ULT
RBR71#71501%&	71,500	1/8	L, U	T, Q, A, B	R	P	SHA, ULT
RBR71#72301%&	72,300	1/8	L, U	T, Q, A, B	R	P	SHA, ULT
RBR71#73201%&	73,200	1/8	L, U	T, Q, A, B	R	P	SHA, ULT
RBR71#74101%&	74,100	1/8	L, U	T, Q, A, B	R	P	SHA, ULT
RBR71#75001%&	75,000	1/8	L, U	T, Q, A, B	R	P	SHA, ULT
RBR71#75901%&	75,900	1/8	L, U	T, Q, A, B	R	P	SHA, ULT
RBR71#76802%&	76,800	1/8	L, U	T, Q, A, B	R	P	SHA, ULT
RBR71#77702%&	77,700	1/8	L, U	T, Q, A, B	R	P	SHA, ULT
RBR71#78702%&	78,700	1/8	L, U	T, Q, A, B	R	P	SHA, ULT
RBR71#79602%&	79,600	1/8	L, U	T, Q, A, B	R	P	SHA, ULT
RBR71#80602%&	80,600	1/8	L, U	T, Q, A, B	R	P	SHA, ULT
RBR71#81602%&	81,600	1/8	L, U	T, Q, A, B	R	P	SHA, ULT
RBR71#82502%&	82,500	1/8	L, U	T, Q, A, B	R	P	SHA, ULT
	Resistance	Power	Terminal	Resistance	Level 1	Level 2	
Part Number	Value (Ohms)	Rating (W)	Characteristic (#)	Tolerance (%)	(FRL)(&)	(FRL)(&)	Manufacturer
RBR71#83502%&	83,500	1/8	L, U	T, Q, A, B	R	P	SHA, ULT
RBR71#84502%&	84,500	1/8	L, U	T, Q, A, B	R	P	SHA, ULT
RBR71#85602%&	85,600	1/8	L, U	T, Q, A, B	R	P	SHA, ULT
RBR71#86602%&	86,600	1/8	L, U	T, Q, A, B	R	P	SHA, ULT
RBR71#87602%&	87,600	1/8	L, U	T, Q, A, B	R	P	SHA, ULT
RBR71#88702%&	88,700	1/8	L, U	T, Q, A, B	R	P	SHA, ULT
RBR71#89802%&	89,800	1/8	L, U	T, Q, A, B	R	P	SHA, ULT
RBR71#90902%&	90,900	1/8	L, U	T, Q, A, B	R	P	SHA, ULT
RBR71#92002%&	92,000	1/8	L, U	T, Q, A, B	R	P	SHA, ULT

RBR71#93102%&	93,100	1/8	L, U	T, Q, A, B	R	P	SHA, ULT
RBR71#94202%&	94,200	1/8	L, U	T, Q, A, B	R	P	SHA, ULT
RBR71#95302%&	95,300	1/8	L, U	T, Q, A, B	R	P	SHA, ULT
RBR71#96502%&	96,500	1/8	L, U	T, Q, A, B	R	P	SHA, ULT
RBR71#97602%&	97,600	1/8	L, U	T, Q, A, B	R	P	SHA, ULT
RBR71#98802%&	98,800	1/8	L, U	T, Q, A, B	R	P	SHA, ULT

RBR71 Wirewound Resistors

100,000 Ohms through 150,000 Ohms

	Resistance	Power	Terminal	Resistance	Level 1	Level 2	
Part Number	Value (Ohms)	Rating (W)	Characteristic (#)	Tolerance (%)	(FRL)(&)	(FRL)(&)	Manufacturer
RBR71#10002%&	100,000	1/8	L, U	T, Q, A, B	R	P	SHA
RBR71#10102%&	101,000	1/8	L, U	T, Q, A, B	R	P	SHA
RBR71#10202%&	102,000	1/8	L, U	T, Q, A, B	R	P	SHA
RBR71#10402%&	104,000	1/8	L, U	T, Q, A, B	R	P	SHA
RBR71#10502%&	105,000	1/8	L, U	T, Q, A, B	R	P	SHA
RBR71#10602%&	106,000	1/8	L, U	T, Q, A, B	R	P	SHA
RBR71#10702%&	107,000	1/8	L, U	T, Q, A, B	R	P	SHA
	Resistance	Power	Terminal	Resistance	Level 1	Level 2	
Part Number	Value (Ohms)	Rating (W)	Characteristic (#)	Tolerance (%)	(FRL)(&)	(FRL)(&)	Manufacturer
RBR71#10902%&	109,000	1/8	L, U	T, Q, A, B	R	P	SHA
RBR71#11002%&	110,000	1/8	L, U	T, Q, A, B	R	P	SHA
RBR71#11102%&	111,000	1/8	L, U	T, Q, A, B	R	P	SHA
RBR71#11302%&	113,000	1/8	L, U	T, Q, A, B	R	P	SHA
RBR71#11402%&	114,000	1/8	L, U	T, Q, A, B	R	P	SHA
RBR71#11502%&	115,000	1/8	L, U	T, Q, A, B	R	P	SHA
RBR71#11702%&	117,000	1/8	L, U	T, Q, A, B	R	P	SHA
	Resistance	Power	Terminal	Resistance	Level 1	Level 2	
Part Number	Value (Ohms)	Rating (W)	Characteristic (#)	Tolerance (%)	(FRL)(&)	(FRL)(&)	Manufacturer
RBR71#11802%&	118,000	1/8	L, U	T, Q, A, B	R	P	SHA
RBR71#12002%&	120,000	1/8	L, U	T, Q, A, B	R	P	SHA
RBR71#12102%&	121,000	1/8	L, U	T, Q, A, B	R	P	SHA
RBR71#12302%&	123,000	1/8	L, U	T, Q, A, B	R	P	SHA
RBR71#12402%&	124,000	1/8	L, U	T, Q, A, B	R	P	SHA
RBR71#12602%&	126,000	1/8	L, U	T, Q, A, B	R	P	SHA
RBR71#12702%&	127,000	1/8	L, U	T, Q, A, B	R	P	SHA
	Resistance	Power	Terminal	Resistance	Level 1	Level 2	
Part Number	Value (Ohms)	Rating (W)	Characteristic (#)	Tolerance (%)	(FRL)(&)	(FRL)(&)	Manufacturer
RBR71#12902%&	129,000	1/8	L, U	T, Q, A, B	R	P	SHA
RBR71#13002%&	130,000	1/8	L, U	T, Q, A, B	R	P	SHA
RBR71#13202%&	132,000	1/8	L, U	T, Q, A, B	R	P	SHA
RBR71#13302%&	133,000	1/8	L, U	T, Q, A, B	R	P	SHA
RBR71#13502%&	135,000	1/8	L, U	T, Q, A, B	R	P	SHA
RBR71#13702%&	137,000	1/8	L, U	T, Q, A, B	R	P	SHA

RBR71#13802%&	138,000	1/8	L, U	T, Q, A, B	R	P	SHA
	Resistance	Power	Terminal	Resistance	Level 1	Level 2	
Part Number	Value (Ohms)	Rating (W)	Characteristic (#)	Tolerance (%)	(FRL)(&)	(FRL)(&)	Manufacturer
RBR71#14002%&	140,000	1/8	L, U	T, Q, A, B	R	P	SHA
RBR71#14202%&	142,000	1/8	L, U	T, Q, A, B	R	P	SHA
RBR71#14302%&	143,000	1/8	L, U	T, Q, A, B	R	P	SHA
RBR71#14502%&	145,000	1/8	L, U	T, Q, A, B	R	P	SHA
RBR71#14702%&	147,000	1/8	L, U	T, Q, A, B	R	P	SHA
RBR71#14902%&	149,000	1/8	L, U	T, Q, A, B	R	P	SHA
RBR71#15002%&	150,000	1/8	L, U	T, Q, A, B	R	P	SHA
	Resistance	Power	Terminal	Resistance	Level 1	Level 2	
Part Number	Value (Ohms)	Rating (W)	Characteristic (#)	Tolerance (%)	(FRL)(&)	(FRL)(&)	Manufacturer

RBR74 Wirewound Resistors

	Resistance	Power	Terminal	Resistance	Level 1	Level 2	
Part Number	Value (Ohms)	Rating (W)	Characteristic (#)	Tolerance (%)	(FRL)(&)	(FRL)(&)	Manufacturer
RBR74%100R0#&	100.0	1/8	L, U	T, Q, A, B	R	P	ULT
RBR74%101R0#&	101.0	1/8	L, U	T, Q, A, B	R	P	ULT
RBR74%102R0#&	102.0	1/8	L, U	T, Q, A, B	R	P	ULT
RBR74%104R0#&	104.0	1/8	L, U	T, Q, A, B	R	P	ULT
RBR74%105R0#&	105.0	1/8	L, U	T, Q, A, B	R	P	ULT
RBR74%106R0#&	106.0	1/8	L, U	T, Q, A, B	R	P	ULT
RBR74%107R0#&	107.0	1/8	L, U	T, Q, A, B	R	P	ULT
RBR74%109R0#&	109.0	1/8	L, U	T, Q, A, B	R	P	ULT
RBR74%110R0#&	110.0	1/8	L, U	T, Q, A, B	R	P	ULT
RBR74%111R0#&	111.0	1/8	L, U	T, Q, A, B	R	P	ULT
RBR74%113R0#&	113.0	1/8	L, U	T, Q, A, B	R	P	ULT
RBR74%114R0#&	114.0	1/8	L, U	T, Q, A, B	R	P	ULT
RBR74%115R0#&	115.0	1/8	L, U	T, Q, A, B	R	P	ULT
RBR74%117R0#&	117.0	1/8	L, U	T, Q, A, B	R	P	ULT
RBR74%118R0#&	118.0	1/8	L, U	T, Q, A, B	R	P	ULT
RBR74%120R0#&	120.0	1/8	L, U	T, Q, A, B	R	P	ULT
RBR74%121R0#&	121.0	1/8	L, U	T, Q, A, B	R	P	ULT
RBR74%123R0#&	123.0	1/8	L, U	T, Q, A, B	R	P	ULT
RBR74%124R0#&	124.0	1/8	L, U	T, Q, A, B	R	P	ULT
RBR74%126R0#&	126.0	1/8	L, U	T, Q, A, B	R	P	ULT
RBR74%127R0#&	127.0	1/8	L, U	T, Q, A, B	R	P	ULT
RBR74%129R0#&	129.0	1/8	L, U	T, Q, A, B	R	P	ULT
RBR74%130R0#&	130.0	1/8	L, U	T, Q, A, B	R	P	ULT
RBR74%132R0#&	132.0	1/8	L, U	T, Q, A, B	R	P	ULT
RBR74%133R0#&	133.0	1/8	L, U	T, Q, A, B	R	P	ULT
RBR74%135R0#&	135.0	1/8	L, U	T, Q, A, B	R	P	ULT
RBR74%137R0#&	137.0	1/8	L, U	T, Q, A, B	R	P	ULT
RBR74%138R0#&	138.0	1/8	L, U	T, Q, A, B	R	P	ULT

RBR74%140R0#&	140.0	1/8	L, U	T, Q, A, B	R	P	ULT
RBR74%142R0#&	142.0	1/8	L, U	T, Q, A, B	R	P	ULT
RBR74%143R0#&	143.0	1/8	L, U	T, Q, A, B	R	P	ULT
RBR74%145R0#&	145.0	1/8	L, U	T, Q, A, B	R	P	ULT
RBR74%147R0#&	147.0	1/8	L, U	T, Q, A, B	R	P	ULT
RBR74%149R0#&	149.0	1/8	L, U	T, Q, A, B	R	P	ULT
RBR74%150R0#&	150.0	1/8	L, U	T, Q, A, B	R	P	ULT
RBR74%152R0#&	152.0	1/8	L, U	T, Q, A, B	R	P	ULT
RBR74%154R0#&	154.0	1/8	L, U	T, Q, A, B	R	P	ULT
RBR74%156R0#&	156.0	1/8	L, U	T, Q, A, B	R	P	ULT
RBR74%158R0#&	158.0	1/8	L, U	T, Q, A, B	R	P	ULT
RBR74%160R0#&	160.0	1/8	L, U	T, Q, A, B	R	P	ULT
RBR74%162R0#&	162.0	1/8	L, U	T, Q, A, B	R	P	ULT
RBR74%164R0#&	164.0	1/8	L, U	T, Q, A, B	R	P	ULT
RBR74%165R0#&	165.0	1/8	L, U	T, Q, A, B	R	P	ULT
RBR74%167R0#&	167.0	1/8	L, U	T, Q, A, B	R	P	ULT
RBR74%169R0#&	169.0	1/8	L, U	T, Q, A, B	R	P	ULT
RBR74%172R0#&	172.0	1/8	L, U	T, Q, A, B	R	P	ULT
RBR74%174R0#&	174.0	1/8	L, U	T, Q, A, B	R	P	ULT
RBR74%176R0#&	176.0	1/8	L, U	T, Q, A, B	R	P	ULT
RBR74%178R0#&	178.0	1/8	L, U	T, Q, A, B	R	P	ULT
RBR74%180R0#&	180.0	1/8	L, U	T, Q, A, B	R	P	ULT
RBR74%182R0#&	182.0	1/8	L, U	T, Q, A, B	R	P	ULT
RBR74%184R0#&	184.0	1/8	L, U	T, Q, A, B	R	P	ULT
RBR74%187R0#&	187.0	1/8	L, U	T, Q, A, B	R	P	ULT
RBR74%189R0#&	189.0	1/8	L, U	T, Q, A, B	R	P	ULT
RBR74%191R0#&	191.0	1/8	L, U	T, Q, A, B	R	P	ULT
RBR74%193R0#&	193.0	1/8	L, U	T, Q, A, B	R	P	ULT
RBR74%196R0#&	196.0	1/8	L, U	T, Q, A, B	R	P	ULT
RBR74%198R0#&	198.0	1/8	L, U	T, Q, A, B	R	P	ULT
RBR74%200R0#&	200.0	1/8	L, U	T, Q, A, B	R	P	ULT
RBR74%203R0#&	203.0	1/8	L, U	T, Q, A, B	R	P	ULT
RBR74%205R0#&	205.0	1/8	L, U	T, Q, A, B	R	P	ULT
RBR74%208R0#&	208.0	1/8	L, U	T, Q, A, B	R	P	ULT
RBR74%210R0#&	210.0	1/8	L, U	T, Q, A, B	R	P	ULT
RBR74%213R0#&	213.0	1/8	L, U	T, Q, A, B	R	P	ULT
RBR74%215R0#&	215.0	1/8	L, U	T, Q, A, B	R	P	ULT
RBR74%218R0#&	218.0	1/8	L, U	T, Q, A, B	R	P	ULT
RBR74%221R0#&	221.0	1/8	L, U	T, Q, A, B	R	P	ULT
RBR74%223R0#&	223.0	1/8	L, U	T, Q, A, B	R	P	ULT
RBR74%226R0#&	226.0	1/8	L, U	T, Q, A, B	R	P	ULT
RBR74%229R0#&	229.0	1/8	L, U	T, Q, A, B	R	P	ULT
RBR74%232R0#&	232.0	1/8	L, U	T, Q, A, B	R	P	ULT
RBR74%234R0#&	234.0	1/8	L, U	T, Q, A, B	R	P	ULT
RBR74%237R0#&	237.0	1/8	L, U	T, Q, A, B	R	P	ULT
RBR74%240R0#&	240.0	1/8	L, U	T, Q, A, B	R	P	ULT
RBR74%243R0#&	243.0	1/8	L, U	T, Q, A, B	R	P	ULT

RBR74%246R0#&	246.0	1/8	L, U	T, Q, A, B	R	P	ULT
RBR74%249R0#&	249.0	1/8	L, U	T, Q, A, B	R	P	ULT
RBR74%252R0#&	252.0	1/8	L, U	T, Q, A, B	R	P	ULT
RBR74%255R0#&	255.0	1/8	L, U	T, Q, A, B	R	P	ULT
RBR74%258R0#&	258.0	1/8	L, U	T, Q, A, B	R	P	ULT
RBR74%261R0#&	261.0	1/8	L, U	T, Q, A, B	R	P	ULT
RBR74%264R0#&	264.0	1/8	L, U	T, Q, A, B	R	P	ULT
RBR74%267R0#&	267.0	1/8	L, U	T, Q, A, B	R	P	ULT
RBR74%271R0#&	271.0	1/8	L, U	T, Q, A, B	R	P	ULT
RBR74%274R0#&	274.0	1/8	L, U	T, Q, A, B	R	P	ULT
RBR74%277R0#&	277.0	1/8	L, U	T, Q, A, B	R	P	ULT
RBR74%280R0#&	280.0	1/8	L, U	T, Q, A, B	R	P	ULT
RBR74%284R0#&	284.0	1/8	L, U	T, Q, A, B	R	P	ULT
RBR74%287R0#&	287.0	1/8	L, U	T, Q, A, B	R	P	ULT
RBR74%291R0#&	291.0	1/8	L, U	T, Q, A, B	R	P	ULT
RBR74%294R0#&	294.0	1/8	L, U	T, Q, A, B	R	P	ULT
RBR74%298R0#&	298.0	1/8	L, U	T, Q, A, B	R	P	ULT
RBR74%301R0#&	301.0	1/8	L, U	T, Q, A, B	R	P	ULT
RBR74%305R0#&	305.0	1/8	L, U	T, Q, A, B	R	P	ULT
RBR74%309R0#&	309.0	1/8	L, U	T, Q, A, B	R	P	ULT
RBR74%312R0#&	312.0	1/8	L, U	T, Q, A, B	R	P	ULT
RBR74%316R0#&	316.0	1/8	L, U	T, Q, A, B	R	P	ULT
RBR74%320R0#&	320.0	1/8	L, U	T, Q, A, B	R	P	ULT
RBR74%324R0#&	324.0	1/8	L, U	T, Q, A, B	R	P	ULT
RBR74%328R0#&	328.0	1/8	L, U	T, Q, A, B	R	P	ULT
RBR74%332R0#&	332.0	1/8	L, U	T, Q, A, B	R	P	ULT
RBR74%336R0#&	336.0	1/8	L, U	T, Q, A, B	R	P	ULT
RBR74%340R0#&	340.0	1/8	L, U	T, Q, A, B	R	P	ULT
RBR74%344R0#&	344.0	1/8	L, U	T, Q, A, B	R	P	ULT
RBR74%348R0#&	348.0	1/8	L, U	T, Q, A, B	R	P	ULT
RBR74%352R0#&	352.0	1/8	L, U	T, Q, A, B	R	P	ULT
RBR74%357R0#&	357.0	1/8	L, U	T, Q, A, B	R	P	ULT
RBR74%361R0#&	361.0	1/8	L, U	T, Q, A, B	R	P	ULT
RBR74%365R0#&	365.0	1/8	L, U	T, Q, A, B	R	P	ULT
RBR74%370R0#&	370.0	1/8	L, U	T, Q, A, B	R	P	ULT
RBR74%374R0#&	374.0	1/8	L, U	T, Q, A, B	R	P	ULT
RBR74%379R0#&	379.0	1/8	L, U	T, Q, A, B	R	P	ULT
RBR74%383R0#&	383.0	1/8	L, U	T, Q, A, B	R	P	ULT
RBR74%388R0#&	388.0	1/8	L, U	T, Q, A, B	R	P	ULT
RBR74%392R0#&	392.0	1/8	L, U	T, Q, A, B	R	P	ULT
RBR74%397R0#&	397.0	1/8	L, U	T, Q, A, B	R	P	ULT
RBR74%402R0#&	402.0	1/8	L, U	T, Q, A, B	R	P	ULT
RBR74%407R0#&	407.0	1/8	L, U	T, Q, A, B	R	P	ULT
RBR74%412R0#&	412.0	1/8	L, U	T, Q, A, B	R	P	ULT
RBR74%417R0#&	417.0	1/8	L, U	T, Q, A, B	R	P	ULT
RBR74%422R0#&	422.0	1/8	L, U	T, Q, A, B	R	P	ULT
RBR74%427R0#&	427.0	1/8	L, U	T, Q, A, B	R	P	ULT

RBR74%432R0#&	432.0	1/8	L, U	T, Q, A, B	R	P	ULT
RBR74%437R0#&	437.0	1/8	L, U	T, Q, A, B	R	P	ULT
RBR74%442R0#&	442.0	1/8	L, U	T, Q, A, B	R	P	ULT
RBR74%448R0#&	448.0	1/8	L, U	T, Q, A, B	R	P	ULT
RBR74%453R0#&	453.0	1/8	L, U	T, Q, A, B	R	P	ULT
RBR74%459R0#&	459.0	1/8	L, U	T, Q, A, B	R	P	ULT
RBR74%464R0#&	464.0	1/8	L, U	T, Q, A, B	R	P	ULT
RBR74%470R0#&	470.0	1/8	L, U	T, Q, A, B	R	P	ULT
RBR74%475R0#&	475.0	1/8	L, U	T, Q, A, B	R	P	ULT
RBR74%481R0#&	481.0	1/8	L, U	T, Q, A, B	R	P	ULT
RBR74%487R0#&	487.0	1/8	L, U	T, Q, A, B	R	P	ULT
RBR74%493R0#&	493.0	1/8	L, U	T, Q, A, B	R	P	ULT
RBR74%499R0#&	499.0	1/8	L, U	T, Q, A, B	R	P	ULT
RBR74%505R0#&	505.0	1/8	L, U	T, Q, A, B	R	P	ULT
RBR74%511R0#&	511.0	1/8	L, U	T, Q, A, B	R	P	ULT
RBR74%517R0#&	517.0	1/8	L, U	T, Q, A, B	R	P	ULT
RBR74%523R0#&	523.0	1/8	L, U	T, Q, A, B	R	P	ULT
RBR74%530R0#&	530.0	1/8	L, U	T, Q, A, B	R	P	ULT
RBR74%536R0#&	536.0	1/8	L, U	T, Q, A, B	R	P	ULT
RBR74%542R0#&	542.0	1/8	L, U	T, Q, A, B	R	P	ULT
RBR74%549R0#&	549.0	1/8	L, U	T, Q, A, B	R	P	ULT
RBR74%556R0#&	556.0	1/8	L, U	T, Q, A, B	R	P	ULT
RBR74%562R0#&	562.0	1/8	L, U	T, Q, A, B	R	P	ULT
RBR74%569R0#&	569.0	1/8	L, U	T, Q, A, B	R	P	ULT
RBR74%576R0#&	576.0	1/8	L, U	T, Q, A, B	R	P	ULT
RBR74%583R0#&	583.0	1/8	L, U	T, Q, A, B	R	P	ULT
RBR74%590R0#&	590.0	1/8	L, U	T, Q, A, B	R	P	ULT
RBR74%597R0#&	597.0	1/8	L, U	T, Q, A, B	R	P	ULT
RBR74%604R0#&	604.0	1/8	L, U	T, Q, A, B	R	P	ULT
RBR74%612R0#&	612.0	1/8	L, U	T, Q, A, B	R	P	ULT
RBR74%619R0#&	619.0	1/8	L, U	T, Q, A, B	R	P	ULT
RBR74%626R0#&	626.0	1/8	L, U	T, Q, A, B	R	P	ULT
RBR74%634R0#&	634.0	1/8	L, U	T, Q, A, B	R	P	ULT
RBR74%642R0#&	642.0	1/8	L, U	T, Q, A, B	R	P	ULT
RBR74%649R0#&	649.0	1/8	L, U	T, Q, A, B	R	P	ULT
RBR74%657R0#&	657.0	1/8	L, U	T, Q, A, B	R	P	ULT
RBR74%665R0#&	665.0	1/8	L, U	T, Q, A, B	R	P	ULT
RBR74%673R0#&	673.0	1/8	L, U	T, Q, A, B	R	P	ULT
RBR74%681R0#&	681.0	1/8	L, U	T, Q, A, B	R	P	ULT
RBR74%690R0#&	690.0	1/8	L, U	T, Q, A, B	R	P	ULT
RBR74%698R0#&	698.0	1/8	L, U	T, Q, A, B	R	P	ULT
RBR74%706R0#&	706.0	1/8	L, U	T, Q, A, B	R	P	ULT
RBR74%715R0#&	715.0	1/8	L, U	T, Q, A, B	R	P	ULT
RBR74%723R0#&	723.0	1/8	L, U	T, Q, A, B	R	P	ULT
RBR74%732R0#&	732.0	1/8	L, U	T, Q, A, B	R	P	ULT
RBR74%741R0#&	741.0	1/8	L, U	T, Q, A, B	R	P	ULT
RBR74%750R0#&	750.0	1/8	L, U	T, Q, A, B	R	P	ULT

RBR74%759R0#&	759.0	1/8	L, U	T, Q, A, B	R	P	ULT
RBR74%768R0#&	768.0	1/8	L, U	T, Q, A, B	R	P	ULT
RBR74%777R0#&	777.0	1/8	L, U	T, Q, A, B	R	P	ULT
RBR74%787R0#&	787.0	1/8	L, U	T, Q, A, B	R	P	ULT
RBR74%796R0#&	796.0	1/8	L, U	T, Q, A, B	R	P	ULT
RBR74%806R0#&	806.0	1/8	L, U	T, Q, A, B	R	P	ULT
RBR74%816R0#&	816.0	1/8	L, U	T, Q, A, B	R	P	ULT
RBR74%825R0#&	825.0	1/8	L, U	T, Q, A, B	R	P	ULT
RBR74%835R0#&	835.0	1/8	L, U	T, Q, A, B	R	P	ULT
RBR74%845R0#&	845.0	1/8	L, U	T, Q, A, B	R	P	ULT
RBR74%856R0#&	856.0	1/8	L, U	T, Q, A, B	R	P	ULT
RBR74%866R0#&	866.0	1/8	L, U	T, Q, A, B	R	P	ULT
RBR74%876R0#&	876.0	1/8	L, U	T, Q, A, B	R	P	ULT
RBR74%887R0#&	887.0	1/8	L, U	T, Q, A, B	R	P	ULT
RBR74%898R0#&	898.0	1/8	L, U	T, Q, A, B	R	P	ULT
RBR74%909R0#&	909.0	1/8	L, U	T, Q, A, B	R	P	ULT
RBR74%920R0#&	920.0	1/8	L, U	T, Q, A, B	R	P	ULT
RBR74%931R0#&	931.0	1/8	L, U	T, Q, A, B	R	P	ULT
RBR74%942R0#&	942.0	1/8	L, U	T, Q, A, B	R	P	ULT
RBR74%953R0#&	953.0	1/8	L, U	T, Q, A, B	R	P	ULT
RBR74%965R0#&	965.0	1/8	L, U	T, Q, A, B	R	P	ULT
RBR74%976R0#&	976.0	1/8	L, U	T, Q, A, B	R	P	ULT
RBR74%988R0#&	988.0	1/8	L, U	T, Q, A, B	R	P	ULT
RBR74#10000%&	1000	1/8	L, U	T, Q, A, B	R	P	ULT
RBR74#10100%&	1010	1/8	L, U	T, Q, A, B	R	P	ULT
RBR74#10200%&	1020	1/8	L, U	T, Q, A, B	R	P	ULT
RBR74#10400%&	1040	1/8	L, U	T, Q, A, B	R	P	ULT
RBR74#10500%&	1050	1/8	L, U	T, Q, A, B	R	P	ULT
RBR74#10600%&	1060	1/8	L, U	T, Q, A, B	R	P	ULT
RBR74#10700%&	1070	1/8	L, U	T, Q, A, B	R	P	ULT
RBR74#10900%&	1090	1/8	L, U	T, Q, A, B	R	P	ULT
RBR74#11000%&	1100	1/8	L, U	T, Q, A, B	R	P	ULT
RBR74#11100%&	1110	1/8	L, U	T, Q, A, B	R	P	ULT
RBR74#11300%&	1130	1/8	L, U	T, Q, A, B	R	P	ULT
RBR74#11400%&	1140	1/8	L, U	T, Q, A, B	R	P	ULT
RBR74#11500%&	1150	1/8	L, U	T, Q, A, B	R	P	ULT
RBR74#11700%&	1170	1/8	L, U	T, Q, A, B	R	P	ULT
RBR74#11800%&	1180	1/8	L, U	T, Q, A, B	R	P	ULT
RBR74#12000%&	1200	1/8	L, U	T, Q, A, B	R	P	ULT
RBR74#12100%&	1210	1/8	L, U	T, Q, A, B	R	P	ULT
RBR74#12300%&	1230	1/8	L, U	T, Q, A, B	R	P	ULT
RBR74#12400%&	1240	1/8	L, U	T, Q, A, B	R	P	ULT
RBR74#12600%&	1260	1/8	L, U	T, Q, A, B	R	P	ULT
RBR74#12700%&	1270	1/8	L, U	T, Q, A, B	R	P	ULT
RBR74#12900%&	1290	1/8	L, U	T, Q, A, B	R	P	ULT
RBR74#13000%&	1300	1/8	L, U	T, Q, A, B	R	P	ULT
RBR74#13200%&	1320	1/8	L, U	T, Q, A, B	R	P	ULT

RBR74#13300%&	1330	1/8	L, U	T, Q, A, B	R	P	ULT
RBR74#13500%&	1350	1/8	L, U	T, Q, A, B	R	P	ULT
RBR74#13700%&	1370	1/8	L, U	T, Q, A, B	R	P	ULT
RBR74#13800%&	1380	1/8	L, U	T, Q, A, B	R	P	ULT
RBR74#14000%&	1400	1/8	L, U	T, Q, A, B	R	P	ULT
RBR74#14200%&	1420	1/8	L, U	T, Q, A, B	R	P	ULT
RBR74#14300%&	1430	1/8	L, U	T, Q, A, B	R	P	ULT
RBR74#14500%&	1450	1/8	L, U	T, Q, A, B	R	P	ULT
RBR74#14700%&	1470	1/8	L, U	T, Q, A, B	R	P	ULT
RBR74#14900%&	1490	1/8	L, U	T, Q, A, B	R	P	ULT
RBR74#15000%&	1500	1/8	L, U	T, Q, A, B	R	P	ULT
RBR74#15200%&	1520	1/8	L, U	T, Q, A, B	R	P	ULT
RBR74#15400%&	1540	1/8	L, U	T, Q, A, B	R	P	ULT
RBR74#15600%&	1560	1/8	L, U	T, Q, A, B	R	P	ULT
RBR74#15800%&	1580	1/8	L, U	T, Q, A, B	R	P	ULT
RBR74#16000%&	1600	1/8	L, U	T, Q, A, B	R	P	ULT
RBR74#16200%&	1620	1/8	L, U	T, Q, A, B	R	P	ULT
RBR74#16400%&	1640	1/8	L, U	T, Q, A, B	R	P	ULT
RBR74#16500%&	1650	1/8	L, U	T, Q, A, B	R	P	ULT
RBR74#16700%&	1670	1/8	L, U	T, Q, A, B	R	P	ULT
RBR74#16900%&	1690	1/8	L, U	T, Q, A, B	R	P	ULT
RBR74#17200%&	1720	1/8	L, U	T, Q, A, B	R	P	ULT
RBR74#17400%&	1740	1/8	L, U	T, Q, A, B	R	P	ULT
RBR74#17600%&	1760	1/8	L, U	T, Q, A, B	R	P	ULT
RBR74#17800%&	1780	1/8	L, U	T, Q, A, B	R	P	ULT
RBR74#18000%&	1800	1/8	L, U	T, Q, A, B	R	P	ULT
RBR74#18200%&	1820	1/8	L, U	T, Q, A, B	R	P	ULT
RBR74#18400%&	1840	1/8	L, U	T, Q, A, B	R	P	ULT
RBR74#18700%&	1870	1/8	L, U	T, Q, A, B	R	P	ULT
RBR74#18900%&	1890	1/8	L, U	T, Q, A, B	R	P	ULT
RBR74#19100%&	1910	1/8	L, U	T, Q, A, B	R	P	ULT
RBR74#19300%&	1930	1/8	L, U	T, Q, A, B	R	P	ULT
RBR74#19600%&	1960	1/8	L, U	T, Q, A, B	R	P	ULT
RBR74#19800%&	1980	1/8	L, U	T, Q, A, B	R	P	ULT
RBR74#20000%&	2000	1/8	L, U	T, Q, A, B	R	P	ULT
RBR74#20300%&	2030	1/8	L, U	T, Q, A, B	R	P	ULT
RBR74#20500%&	2050	1/8	L, U	T, Q, A, B	R	P	ULT
RBR74#20800%&	2080	1/8	L, U	T, Q, A, B	R	P	ULT
RBR74#21000%&	2100	1/8	L, U	T, Q, A, B	R	P	ULT
RBR74#21300%&	2130	1/8	L, U	T, Q, A, B	R	P	ULT
RBR74#21500%&	2150	1/8	L, U	T, Q, A, B	R	P	ULT
RBR74#21800%&	2180	1/8	L, U	T, Q, A, B	R	P	ULT
RBR74#22100%&	2210	1/8	L, U	T, Q, A, B	R	P	ULT
RBR74#22300%&	2230	1/8	L, U	T, Q, A, B	R	P	ULT
RBR74#22600%&	2260	1/8	L, U	T, Q, A, B	R	P	ULT
RBR74#22900%&	2290	1/8	L, U	T, Q, A, B	R	P	ULT
RBR74#23200%&	2320	1/8	L, U	T, Q, A, B	R	P	ULT

RBR74#23400%&	2340	1/8	L, U	T, Q, A, B	R	P	ULT
RBR74#23700%&	2370	1/8	L, U	T, Q, A, B	R	P	ULT
RBR74#24000%&	2400	1/8	L, U	T, Q, A, B	R	P	ULT
RBR74#24300%&	2430	1/8	L, U	T, Q, A, B	R	P	ULT
RBR74#24600%&	2460	1/8	L, U	T, Q, A, B	R	P	ULT
RBR74#24900%&	2490	1/8	L, U	T, Q, A, B	R	P	ULT
RBR74#25200%&	2520	1/8	L, U	T, Q, A, B	R	P	ULT
RBR74#25500%&	2550	1/8	L, U	T, Q, A, B	R	P	ULT
RBR74#25800%&	2580	1/8	L, U	T, Q, A, B	R	P	ULT
RBR74#26100%&	2610	1/8	L, U	T, Q, A, B	R	P	ULT
RBR74#26400%&	2640	1/8	L, U	T, Q, A, B	R	P	ULT
RBR74#26700%&	2670	1/8	L, U	T, Q, A, B	R	P	ULT
RBR74#27100%&	2710	1/8	L, U	T, Q, A, B	R	P	ULT
RBR74#27400%&	2740	1/8	L, U	T, Q, A, B	R	P	ULT
RBR74#27700%&	2770	1/8	L, U	T, Q, A, B	R	P	ULT
RBR74#28000%&	2800	1/8	L, U	T, Q, A, B	R	P	ULT
RBR74#28400%&	2840	1/8	L, U	T, Q, A, B	R	P	ULT
RBR74#28700%&	2870	1/8	L, U	T, Q, A, B	R	P	ULT
RBR74#29100%&	2910	1/8	L, U	T, Q, A, B	R	P	ULT
RBR74#29400%&	2940	1/8	L, U	T, Q, A, B	R	P	ULT
RBR74#29800%&	2980	1/8	L, U	T, Q, A, B	R	P	ULT
RBR74#30100%&	3010	1/8	L, U	T, Q, A, B	R	P	ULT
RBR74#30500%&	3050	1/8	L, U	T, Q, A, B	R	P	ULT
RBR74#30900%&	3090	1/8	L, U	T, Q, A, B	R	P	ULT
RBR74#31200%&	3120	1/8	L, U	T, Q, A, B	R	P	ULT
RBR74#31600%&	3160	1/8	L, U	T, Q, A, B	R	P	ULT
RBR74#32000%&	3200	1/8	L, U	T, Q, A, B	R	P	ULT
RBR74#32400%&	3240	1/8	L, U	T, Q, A, B	R	P	ULT
RBR74#32800%&	3280	1/8	L, U	T, Q, A, B	R	P	ULT
RBR74#33200%&	3320	1/8	L, U	T, Q, A, B	R	P	ULT
RBR74#33600%&	3360	1/8	L, U	T, Q, A, B	R	P	ULT
RBR74#34000%&	3400	1/8	L, U	T, Q, A, B	R	P	ULT
RBR74#34400%&	3440	1/8	L, U	T, Q, A, B	R	P	ULT
RBR74#34800%&	3480	1/8	L, U	T, Q, A, B	R	P	ULT
RBR74#35200%&	3520	1/8	L, U	T, Q, A, B	R	P	ULT
RBR74#35700%&	3570	1/8	L, U	T, Q, A, B	R	P	ULT
RBR74#36100%&	3610	1/8	L, U	T, Q, A, B	R	P	ULT
RBR74#36500%&	3650	1/8	L, U	T, Q, A, B	R	P	ULT
RBR74#37000%&	3700	1/8	L, U	T, Q, A, B	R	P	ULT
RBR74#37400%&	3740	1/8	L, U	T, Q, A, B	R	P	ULT
RBR74#37900%&	3790	1/8	L, U	T, Q, A, B	R	P	ULT
RBR74#38300%&	3830	1/8	L, U	T, Q, A, B	R	P	ULT
RBR74#38800%&	3880	1/8	L, U	T, Q, A, B	R	P	ULT
RBR74#39200%&	3920	1/8	L, U	T, Q, A, B	R	P	ULT
RBR74#39700%&	3970	1/8	L, U	T, Q, A, B	R	P	ULT
RBR74#40200%&	4020	1/8	L, U	T, Q, A, B	R	P	ULT
RBR74#40700%&	4070	1/8	L, U	T, Q, A, B	R	P	ULT

RBR74#41200%&	4120	1/8	L, U	T, Q, A, B	R	P	ULT
RBR74#41700%&	4170	1/8	L, U	T, Q, A, B	R	P	ULT
RBR74#42200%&	4220	1/8	L, U	T, Q, A, B	R	P	ULT
RBR74#42700%&	4270	1/8	L, U	T, Q, A, B	R	P	ULT
RBR74#43200%&	4320	1/8	L, U	T, Q, A, B	R	P	ULT
RBR74#43700%&	4370	1/8	L, U	T, Q, A, B	R	P	ULT
RBR74#44200%&	4420	1/8	L, U	T, Q, A, B	R	P	ULT
RBR74#44800%&	4480	1/8	L, U	T, Q, A, B	R	P	ULT
RBR74#45300%&	4530	1/8	L, U	T, Q, A, B	R	P	ULT
RBR74#45900%&	4590	1/8	L, U	T, Q, A, B	R	P	ULT
RBR74#46400%&	4640	1/8	L, U	T, Q, A, B	R	P	ULT
RBR74#47000%&	4700	1/8	L, U	T, Q, A, B	R	P	ULT
RBR74#47500%&	4750	1/8	L, U	T, Q, A, B	R	P	ULT
RBR74#48100%&	4810	1/8	L, U	T, Q, A, B	R	P	ULT
RBR74#48700%&	4870	1/8	L, U	T, Q, A, B	R	P	ULT
RBR74#49300%&	4930	1/8	L, U	T, Q, A, B	R	P	ULT
RBR74#49900%&	4990	1/8	L, U	T, Q, A, B	R	P	ULT
RBR74#50500%&	5050	1/8	L, U	T, Q, A, B	R	P	ULT
RBR74#51100%&	5110	1/8	L, U	T, Q, A, B	R	P	ULT
RBR74#51700%&	5170	1/8	L, U	T, Q, A, B	R	P	ULT
RBR74#52300%&	5230	1/8	L, U	T, Q, A, B	R	P	ULT
RBR74#53000%&	5300	1/8	L, U	T, Q, A, B	R	P	ULT
RBR74#53600%&	5360	1/8	L, U	T, Q, A, B	R	P	ULT
RBR74#54200%&	5420	1/8	L, U	T, Q, A, B	R	P	ULT
RBR74#54900%&	5490	1/8	L, U	T, Q, A, B	R	P	ULT
RBR74#55600%&	5560	1/8	L, U	T, Q, A, B	R	P	ULT
RBR74#56200%&	5620	1/8	L, U	T, Q, A, B	R	P	ULT
RBR74#56900%&	5690	1/8	L, U	T, Q, A, B	R	P	ULT
RBR74#57600%&	5760	1/8	L, U	T, Q, A, B	R	P	ULT
RBR74#58300%&	5830	1/8	L, U	T, Q, A, B	R	P	ULT
RBR74#59000%&	5900	1/8	L, U	T, Q, A, B	R	P	ULT
RBR74#59700%&	5970	1/8	L, U	T, Q, A, B	R	P	ULT
RBR74#60400%&	6040	1/8	L, U	T, Q, A, B	R	P	ULT
RBR74#61200%&	6120	1/8	L, U	T, Q, A, B	R	P	ULT
RBR74#61900%&	6190	1/8	L, U	T, Q, A, B	R	P	ULT
RBR74#62600%&	6260	1/8	L, U	T, Q, A, B	R	P	ULT
RBR74#63400%&	6340	1/8	L, U	T, Q, A, B	R	P	ULT
RBR74#64200%&	6420	1/8	L, U	T, Q, A, B	R	P	ULT
RBR74#64900%&	6490	1/8	L, U	T, Q, A, B	R	P	ULT
RBR74#65700%&	6570	1/8	L, U	T, Q, A, B	R	P	ULT

RBR74 RESISTORS DECADE BREAKDOWN

Click on the link below to see the associated parts selection listing:

Resistance Range

RBR74 Wirewound Resistors: 100.0 Ohms through 988.0 Ohms

	Resistance	Power	Terminal	Resistance	Level 1	Level 2	
Part Number	Value (Ohms)	Rating (W)	Characteristic (#)	Tolerance (%)	(FRL)(&)	(FRL)(&)	Manufacturer
RBR74#100R0%&	100.0	1/8	L, U	T, Q, A, B	R	P	NO SOURCE
RBR74#101R0%&	101.0	1/8	L, U	T, Q, A, B	R	P	NO SOURCE
RBR74#102R0%&	102.0	1/8	L, U	T, Q, A, B	R	P	NO SOURCE
RBR74#104R0%&	104.0	1/8	L, U	T, Q, A, B	R	P	NO SOURCE
RBR74#105R0%&	105.0	1/8	L, U	T, Q, A, B	R	P	NO SOURCE
RBR74#106R0%&	106.0	1/8	L, U	T, Q, A, B	R	P	NO SOURCE
RBR74#107R0%&	107.0	1/8	L, U	T, Q, A, B	R	P	NO SOURCE
RBR74#109R0%&	109.0	1/8	L, U	T, Q, A, B	R	P	NO SOURCE
RBR74#110R0%&	110.0	1/8	L, U	T, Q, A, B	R	P	NO SOURCE
RBR74#111R0%&	111.0	1/8	L, U	T, Q, A, B	R	P	NO SOURCE
RBR74#113R0%&	113.0	1/8	L, U	T, Q, A, B	R	P	NO SOURCE
RBR74#114R0%&	114.0	1/8	L, U	T, Q, A, B	R	P	NO SOURCE
RBR74#115R0%&	115.0	1/8	L, U	T, Q, A, B	R	P	NO SOURCE
RBR74#117R0%&	117.0	1/8	L, U	T, Q, A, B	R	P	NO SOURCE
	Resistance	Power	Terminal	Resistance	Level 1	Level 2	
Part Number	Value (Ohms)	Rating (W)	Characteristic (#)	Tolerance (%)	(FRL)(&)	(FRL)(&)	Manufacturer
RBR74#118R0%&	118.0	1/8	L, U	T, Q, A, B	R	P	NO SOURCE
RBR74#120R0%&	120.0	1/8	L, U	T, Q, A, B	R	P	NO SOURCE
RBR74#121R0%&	121.0	1/8	L, U	T, Q, A, B	R	P	NO SOURCE
RBR74#123R0%&	123.0	1/8	L, U	T, Q, A, B	R	P	NO SOURCE
RBR74#124R0%&	124.0	1/8	L, U	T, Q, A, B	R	P	NO SOURCE
RBR74#126R0%&	126.0	1/8	L, U	T, Q, A, B	R	P	NO SOURCE
RBR74#127R0%&	127.0	1/8	L, U	T, Q, A, B	R	P	NO SOURCE
RBR74#129R0%&	129.0	1/8	L, U	T, Q, A, B	R	P	NO SOURCE
RBR74#130R0%&	130.0	1/8	L, U	T, Q, A, B	R	P	NO SOURCE
RBR74#132R0%&	132.0	1/8	L, U	T, Q, A, B	R	P	NO SOURCE
RBR74#133R0%&	133.0	1/8	L, U	T, Q, A, B	R	P	NO SOURCE
RBR74#135R0%&	135.0	1/8	L, U	T, Q, A, B	R	P	NO SOURCE
RBR74#137R0%&	137.0	1/8	L, U	T, Q, A, B	R	P	NO SOURCE
RBR74#138R0%&	138.0	1/8	L, U	T, Q, A, B	R	P	NO SOURCE
	Resistance	Power	Terminal	Resistance	Level 1	Level 2	
Part Number	Value (Ohms)	Rating (W)	Characteristic (#)	Tolerance (%)	(FRL)(&)	(FRL)(&)	Manufacturer
RBR74#140R0%&	140.0	1/8	L, U	T, Q, A, B	R	P	NO SOURCE
RBR74#142R0%&	142.0	1/8	L, U	T, Q, A, B	R	P	NO SOURCE
RBR74#143R0%&	143.0	1/8	L, U	T, Q, A, B	R	P	NO SOURCE
RBR74#145R0%&	145.0	1/8	L, U	T, Q, A, B	R	P	NO SOURCE
RBR74#147R0%&	147.0	1/8	L, U	T, Q, A, B	R	P	NO SOURCE
RBR74#149R0%&	149.0	1/8	L, U	T, Q, A, B	R	P	NO SOURCE

RBR74#150R0%&	150.0	1/8	L, U	T, Q, A, B	R	P	NO SOURCE
RBR74#152R0%&	152.0	1/8	L, U	T, Q, A, B	R	P	NO SOURCE
RBR74#154R0%&	154.0	1/8	L, U	T, Q, A, B	R	P	NO SOURCE
RBR74#156R0%&	156.0	1/8	L, U	T, Q, A, B	R	P	NO SOURCE
RBR74#158R0%&	158.0	1/8	L, U	T, Q, A, B	R	P	NO SOURCE
RBR74#160R0%&	160.0	1/8	L, U	T, Q, A, B	R	P	NO SOURCE
RBR74#162R0%&	162.0	1/8	L, U	T, Q, A, B	R	P	NO SOURCE
RBR74#164R0%&	164.0	1/8	L, U	T, Q, A, B	R	P	NO SOURCE
	Resistance	Power	Terminal	Resistance	Level 1	Level 2	
Part Number	Value (Ohms)	Rating (W)	Characteristic (#)	Tolerance (%)	(FRL)(&)	(FRL)(&)	Manufacturer
RBR74#165R0%&	165.0	1/8	L, U	T, Q, A, B	R	P	NO SOURCE
RBR74#167R0%&	167.0	1/8	L, U	T, Q, A, B	R	P	NO SOURCE
RBR74#169R0%&	169.0	1/8	L, U	T, Q, A, B	R	P	NO SOURCE
RBR74#172R0%&	172.0	1/8	L, U	T, Q, A, B	R	P	NO SOURCE
RBR74#174R0%&	174.0	1/8	L, U	T, Q, A, B	R	P	NO SOURCE
RBR74#176R0%&	176.0	1/8	L, U	T, Q, A, B	R	P	NO SOURCE
RBR74#178R0%&	178.0	1/8	L, U	T, Q, A, B	R	P	NO SOURCE
RBR74#180R0%&	180.0	1/8	L, U	T, Q, A, B	R	P	NO SOURCE
RBR74#182R0%&	182.0	1/8	L, U	T, Q, A, B	R	P	NO SOURCE
RBR74#184R0%&	184.0	1/8	L, U	T, Q, A, B	R	P	NO SOURCE
RBR74#187R0%&	187.0	1/8	L, U	T, Q, A, B	R	P	NO SOURCE
RBR74#189R0%&	189.0	1/8	L, U	T, Q, A, B	R	P	NO SOURCE
RBR74#191R0%&	191.0	1/8	L, U	T, Q, A, B	R	P	NO SOURCE
RBR74#193R0%&	193.0	1/8	L, U	T, Q, A, B	R	P	NO SOURCE
	Resistance	Power	Terminal	Resistance	Level 1	Level 2	
Part Number	Value (Ohms)	Rating (W)	Characteristic (#)	Tolerance (%)	(FRL)(&)	(FRL)(&)	Manufacturer
RBR74#196R0%&	196.0	1/8	L, U	T, Q, A, B	R	P	NO SOURCE
RBR74#198R0%&	198.0	1/8	L, U	T, Q, A, B	R	P	NO SOURCE
RBR74#200R0%&	200.0	1/8	L, U	T, Q, A, B	R	P	NO SOURCE
RBR74#203R0%&	203.0	1/8	L, U	T, Q, A, B	R	P	NO SOURCE
RBR74#205R0%&	205.0	1/8	L, U	T, Q, A, B	R	P	NO SOURCE
RBR74#208R0%&	208.0	1/8	L, U	T, Q, A, B	R	P	NO SOURCE
RBR74#210R0%&	210.0	1/8	L, U	T, Q, A, B	R	P	NO SOURCE
RBR74#213R0%&	213.0	1/8	L, U	T, Q, A, B	R	P	NO SOURCE
RBR74#215R0%&	215.0	1/8	L, U	T, Q, A, B	R	P	NO SOURCE
RBR74#218R0%&	218.0	1/8	L, U	T, Q, A, B	R	P	NO SOURCE
RBR74#221R0%&	221.0	1/8	L, U	T, Q, A, B	R	P	NO SOURCE
RBR74#223R0%&	223.0	1/8	L, U	T, Q, A, B	R	P	NO SOURCE
RBR74#226R0%&	226.0	1/8	L, U	T, Q, A, B	R	P	NO SOURCE
RBR74#229R0%&	229.0	1/8	L, U	T, Q, A, B	R	P	NO SOURCE
	Resistance	Power	Terminal	Resistance	Level 1	Level 2	
Part Number	Value (Ohms)	Rating (W)	Characteristic (#)	Tolerance (%)	(FRL)(&)	(FRL)(&)	Manufacturer
RBR74#232R0%&	232.0	1/8	L, U	T, Q, A, B	R	P	NO SOURCE
RBR74#234R0%&	234.0	1/8	L, U	T, Q, A, B	R	P	NO SOURCE
RBR74#237R0%&	237.0	1/8	L, U	T, Q, A, B	R	P	NO SOURCE
RBR74#240R0%&	240.0	1/8	L, U	T, Q, A, B	R	P	NO SOURCE
RBR74#243R0%&	243.0	1/8	L, U	T, Q, A, B	R	P	NO SOURCE

RBR74#246R0%&	246.0	1/8	L, U	T, Q, A, B	R	P	NO SOURCE
RBR74#249R0%&	249.0	1/8	L, U	T, Q, A, B	R	P	NO SOURCE
RBR74#252R0%&	252.0	1/8	L, U	T, Q, A, B	R	P	NO SOURCE
RBR74#255R0%&	255.0	1/8	L, U	T, Q, A, B	R	P	NO SOURCE
RBR74#258R0%&	258.0	1/8	L, U	T, Q, A, B	R	P	NO SOURCE
RBR74#261R0%&	261.0	1/8	L, U	T, Q, A, B	R	P	NO SOURCE
RBR74#264R0%&	264.0	1/8	L, U	T, Q, A, B	R	P	NO SOURCE
RBR74#267R0%&	267.0	1/8	L, U	T, Q, A, B	R	P	NO SOURCE
RBR74#271R0%&	271.0	1/8	L, U	T, Q, A, B	R	P	NO SOURCE
	Resistance	Power	Terminal	Resistance	Level 1	Level 2	
Part Number	Value (Ohms)	Rating (W)	Characteristic (#)	Tolerance (%)	(FRL)(&)	(FRL)(&)	Manufacturer
RBR74#274R0%&	274.0	1/8	L, U	T, Q, A, B	R	P	NO SOURCE
RBR74#277R0%&	277.0	1/8	L, U	T, Q, A, B	R	P	NO SOURCE
RBR74#280R0%&	280.0	1/8	L, U	T, Q, A, B	R	P	NO SOURCE
RBR74#284R0%&	284.0	1/8	L, U	T, Q, A, B	R	P	NO SOURCE
RBR74#287R0%&	287.0	1/8	L, U	T, Q, A, B	R	P	NO SOURCE
RBR74#291R0%&	291.0	1/8	L, U	T, Q, A, B	R	P	NO SOURCE
RBR74#294R0%&	294.0	1/8	L, U	T, Q, A, B	R	P	NO SOURCE
RBR74#298R0%&	298.0	1/8	L, U	T, Q, A, B	R	P	NO SOURCE
RBR74#301R0%&	301.0	1/8	L, U	T, Q, A, B	R	P	NO SOURCE
RBR74#305R0%&	305.0	1/8	L, U	T, Q, A, B	R	P	NO SOURCE
RBR74#309R0%&	309.0	1/8	L, U	T, Q, A, B	R	P	NO SOURCE
RBR74#312R0%&	312.0	1/8	L, U	T, Q, A, B	R	P	NO SOURCE
	Resistance	Power	Terminal	Resistance	Level 1	Level 2	
Part Number	Value (Ohms)	Rating (W)	Characteristic (#)	Tolerance (%)	(FRL)(&)	(FRL)(&)	Manufacturer
RBR74#316R0%&	316.0	1/8	L, U	T, Q, A, B	R	P	NO SOURCE
RBR74#320R0%&	320.0	1/8	L, U	T, Q, A, B	R	P	NO SOURCE
RBR74#324R0%&	324.0	1/8	L, U	T, Q, A, B	R	P	NO SOURCE
RBR74#328R0%&	328.0	1/8	L, U	T, Q, A, B	R	P	NO SOURCE
RBR74#332R0%&	332.0	1/8	L, U	T, Q, A, B	R	P	NO SOURCE
RBR74#336R0%&	336.0	1/8	L, U	T, Q, A, B	R	P	NO SOURCE
RBR74#340R0%&	340.0	1/8	L, U	T, Q, A, B	R	P	NO SOURCE
RBR74#344R0%&	344.0	1/8	L, U	T, Q, A, B	R	P	NO SOURCE
RBR74#348R0%&	348.0	1/8	L, U	T, Q, A, B	R	P	NO SOURCE
RBR74#352R0%&	352.0	1/8	L, U	T, Q, A, B	R	P	NO SOURCE
RBR74#357R0%&	357.0	1/8	L, U	T, Q, A, B	R	P	NO SOURCE
RBR74#361R0%&	361.0	1/8	L, U	T, Q, A, B	R	P	NO SOURCE
RBR74#365R0%&	365.0	1/8	L, U	T, Q, A, B	R	P	NO SOURCE
RBR74#370R0%&	370.0	1/8	L, U	T, Q, A, B	R	P	NO SOURCE
	Resistance	Power	Terminal	Resistance	Level 1	Level 2	
Part Number	Value (Ohms)	Rating (W)	Characteristic (#)	Tolerance (%)	(FRL)(&)	(FRL)(&)	Manufacturer
RBR74#374R0%&	374.0	1/8	L, U	T, Q, A, B	R	P	NO SOURCE
RBR74#379R0%&	379.0	1/8	L, U	T, Q, A, B	R	P	NO SOURCE
RBR74#383R0%&	383.0	1/8	L, U	T, Q, A, B	R	P	NO SOURCE
RBR74#388R0%&	388.0	1/8	L, U	T, Q, A, B	R	P	NO SOURCE
RBR74#392R0%&	392.0	1/8	L, U	T, Q, A, B	R	P	NO SOURCE
RBR74#397R0%&	397.0	1/8	L, U	T, Q, A, B	R	P	NO SOURCE

RBR74#402R0%&	402.0	1/8	L, U	T, Q, A, B	R	P	NO SOURCE
RBR74#407R0%&	407.0	1/8	L, U	T, Q, A, B	R	P	NO SOURCE
RBR74#412R0%&	412.0	1/8	L, U	T, Q, A, B	R	P	NO SOURCE
RBR74#417R0%&	417.0	1/8	L, U	T, Q, A, B	R	P	NO SOURCE
RBR74#422R0%&	422.0	1/8	L, U	T, Q, A, B	R	P	NO SOURCE
RBR74#427R0%&	427.0	1/8	L, U	T, Q, A, B	R	P	NO SOURCE
RBR74#432R0%&	432.0	1/8	L, U	T, Q, A, B	R	P	NO SOURCE
RBR74#437R0%&	437.0	1/8	L, U	T, Q, A, B	R	P	NO SOURCE
	Resistance	Power	Terminal	Resistance	Level 1	Level 2	
Part Number	Value (Ohms)	Rating (W)	Characteristic (#)	Tolerance (%)	(FRL)(&)	(FRL)(&)	Manufacturer
RBR74#442R0%&	442.0	1/8	L, U	T, Q, A, B	R	P	NO SOURCE
RBR74#448R0%&	448.0	1/8	L, U	T, Q, A, B	R	P	NO SOURCE
RBR74#453R0%&	453.0	1/8	L, U	T, Q, A, B	R	P	NO SOURCE
RBR74#459R0%&	459.0	1/8	L, U	T, Q, A, B	R	P	NO SOURCE
RBR74#464R0%&	464.0	1/8	L, U	T, Q, A, B	R	P	NO SOURCE
RBR74#470R0%&	470.0	1/8	L, U	T, Q, A, B	R	P	NO SOURCE
RBR74#475R0%&	475.0	1/8	L, U	T, Q, A, B	R	P	NO SOURCE
RBR74#481R0%&	481.0	1/8	L, U	T, Q, A, B	R	P	NO SOURCE
RBR74#487R0%&	487.0	1/8	L, U	T, Q, A, B	R	P	NO SOURCE
RBR74#493R0%&	493.0	1/8	L, U	T, Q, A, B	R	P	NO SOURCE
RBR74#499R0%&	499.0	1/8	L, U	T, Q, A, B	R	P	NO SOURCE
RBR74#505R0%&	505.0	1/8	L, U	T, Q, A, B	R	P	NO SOURCE
RBR74#511R0%&	511.0	1/8	L, U	T, Q, A, B	R	P	NO SOURCE
RBR74#517R0%&	517.0	1/8	L, U	T, Q, A, B	R	P	NO SOURCE
	Resistance	Power	Terminal	Resistance	Level 1	Level 2	
Part Number	Value (Ohms)	Rating (W)	Characteristic (#)	Tolerance (%)	(FRL)(&)	(FRL)(&)	Manufacturer
RBR74#523R0%&	523.0	1/8	L, U	T, Q, A, B	R	P	NO SOURCE
RBR74#530R0%&	530.0	1/8	L, U	T, Q, A, B	R	P	NO SOURCE
RBR74#536R0%&	536.0	1/8	L, U	T, Q, A, B	R	P	NO SOURCE
RBR74#542R0%&	542.0	1/8	L, U	T, Q, A, B	R	P	NO SOURCE
RBR74#549R0%&	549.0	1/8	L, U	T, Q, A, B	R	P	NO SOURCE
RBR74#556R0%&	556.0	1/8	L, U	T, Q, A, B	R	P	NO SOURCE
RBR74#562R0%&	562.0	1/8	L, U	T, Q, A, B	R	P	NO SOURCE
RBR74#569R0%&	569.0	1/8	L, U	T, Q, A, B	R	P	NO SOURCE
RBR74#576R0%&	576.0	1/8	L, U	T, Q, A, B	R	P	NO SOURCE
RBR74#583R0%&	583.0	1/8	L, U	T, Q, A, B	R	P	NO SOURCE
RBR74#590R0%&	590.0	1/8	L, U	T, Q, A, B	R	P	NO SOURCE
RBR74#597R0%&	597.0	1/8	L, U	T, Q, A, B	R	P	NO SOURCE
RBR74#604R0%&	604.0	1/8	L, U	T, Q, A, B	R	P	NO SOURCE
RBR74#612R0%&	612.0	1/8	L, U	T, Q, A, B	R	P	NO SOURCE
	Resistance	Power	Terminal	Resistance	Level 1	Level 2	
Part Number	Value (Ohms)	Rating (W)	Characteristic (#)	Tolerance (%)	(FRL)(&)	(FRL)(&)	Manufacturer
RBR74#619R0%&	619.0	1/8	L, U	T, Q, A, B	R	P	NO SOURCE
RBR74#626R0%&	626.0	1/8	L, U	T, Q, A, B	R	P	NO SOURCE
RBR74#634R0%&	634.0	1/8	L, U	T, Q, A, B	R	P	NO SOURCE
RBR74#642R0%&	642.0	1/8	L, U	T, Q, A, B	R	P	NO SOURCE
RBR74#649R0%&	649.0	1/8	L, U	T, Q, A, B	R	P	NO SOURCE

RBR74#657R0%&	657.0	1/8	L, U	T, Q, A, B	R	P	NO SOURCE
RBR74#665R0%&	665.0	1/8	L, U	T, Q, A, B	R	P	NO SOURCE
RBR74#673R0%&	673.0	1/8	L, U	T, Q, A, B	R	P	NO SOURCE
RBR74#681R0%&	681.0	1/8	L, U	T, Q, A, B	R	P	NO SOURCE
RBR74#690R0%&	690.0	1/8	L, U	T, Q, A, B	R	P	NO SOURCE
RBR74#698R0%&	698.0	1/8	L, U	T, Q, A, B	R	P	NO SOURCE
RBR74#706R0%&	706.0	1/8	L, U	T, Q, A, B	R	P	NO SOURCE
	Resistance	Power	Terminal	Resistance	Level 1	Level 2	
Part Number	Value (Ohms)	Rating (W)	Characteristic (#)	Tolerance (%)	(FRL)(&)	(FRL)(&)	Manufacturer
RBR74#715R0%&	715.0	1/8	L, U	T, Q, A, B	R	P	NO SOURCE
RBR74#723R0%&	723.0	1/8	L, U	T, Q, A, B	R	P	NO SOURCE
RBR74#732R0%&	732.0	1/8	L, U	T, Q, A, B	R	P	NO SOURCE
RBR74#741R0%&	741.0	1/8	L, U	T, Q, A, B	R	P	NO SOURCE
RBR74#750R0%&	750.0	1/8	L, U	T, Q, A, B	R	P	NO SOURCE
RBR74#759R0%&	759.0	1/8	L, U	T, Q, A, B	R	P	NO SOURCE
RBR74%768R0#&	768.0	1/8	L, U	T, Q, A, B	R	P	NO SOURCE
RBR74%777R0#&	777.0	1/8	L, U	T, Q, A, B	R	P	NO SOURCE
RBR74%787R0#&	787.0	1/8	L, U	T, Q, A, B	R	P	NO SOURCE
RBR74%796R0#&	796.0	1/8	L, U	T, Q, A, B	R	P	NO SOURCE
RBR74%806R0#&	806.0	1/8	L, U	T, Q, A, B	R	P	NO SOURCE
RBR74%816R0#&	816.0	1/8	L, U	T, Q, A, B	R	P	NO SOURCE
RBR74%825R0#&	825.0	1/8	L, U	T, Q, A, B	R	P	NO SOURCE
RBR74%835R0#&	835.0	1/8	L, U	T, Q, A, B	R	P	NO SOURCE
	Resistance	Power	Terminal	Resistance	Level 1	Level 2	
Part Number	Value (Ohms)	Rating (W)	Characteristic (#)	Tolerance (%)	(FRL)(&)	(FRL)(&)	Manufacturer
RBR74%845R0#&	845.0	1/8	L, U	T, Q, A, B	R	P	NO SOURCE
RBR74%856R0#&	856.0	1/8	L, U	T, Q, A, B	R	P	NO SOURCE
RBR74%866R0#&	866.0	1/8	L, U	T, Q, A, B	R	P	NO SOURCE
RBR74%876R0#&	876.0	1/8	L, U	T, Q, A, B	R	P	NO SOURCE
RBR74%887R0#&	887.0	1/8	L, U	T, Q, A, B	R	P	NO SOURCE
RBR74%898R0#&	898.0	1/8	L, U	T, Q, A, B	R	P	NO SOURCE
RBR74%909R0#&	909.0	1/8	L, U	T, Q, A, B	R	P	NO SOURCE
RBR74%920R0#&	920.0	1/8	L, U	T, Q, A, B	R	P	NO SOURCE
RBR74%931R0#&	931.0	1/8	L, U	T, Q, A, B	R	P	NO SOURCE
RBR74%942R0#&	942.0	1/8	L, U	T, Q, A, B	R	P	NO SOURCE
RBR74%953R0#&	953.0	1/8	L, U	T, Q, A, B	R	P	NO SOURCE
RBR74%965R0#&	965.0	1/8	L, U	T, Q, A, B	R	P	NO SOURCE
RBR74%976R0#&	976.0	1/8	L, U	T, Q, A, B	R	P	NO SOURCE
RBR74%988R0#&	988.0	1/8	L, U	T, Q, A, B	R	P	NO SOURCE
	Resistance	Power	Terminal	Resistance	Level 1	Level 2	
Part Number	Value (Ohms)	Rating (W)	Characteristic (#)	Tolerance (%)	(FRL)(&)	(FRL)(&)	Manufacturer

RBR74 Wirewound Resistors: 1,000 Ohms through 6,570 Ohms

	Resistance	Power	Terminal	Resistance	Level 1	Level 2	

Part Number	Value (Ohms)	Rating (W)	Characteristic (#)	Tolerance (%)	(FRL)(&)	(FRL)(&)	Manufacturer
RBR74#10000%&	1000	1/8	L, U	T, Q, A, B	R	P	NO SOURCE
RBR74#10100%&	1010	1/8	L, U	T, Q, A, B	R	P	NO SOURCE
RBR74#10200%&	1020	1/8	L, U	T, Q, A, B	R	P	NO SOURCE
RBR74#10400%&	1040	1/8	L, U	T, Q, A, B	R	P	NO SOURCE
RBR74#10500%&	1050	1/8	L, U	T, Q, A, B	R	P	NO SOURCE
RBR74#10600%&	1060	1/8	L, U	T, Q, A, B	R	P	NO SOURCE
RBR74#10700%&	1070	1/8	L, U	T, Q, A, B	R	P	NO SOURCE
RBR74#10900%&	1090	1/8	L, U	T, Q, A, B	R	P	NO SOURCE
RBR74#11000%&	1100	1/8	L, U	T, Q, A, B	R	P	NO SOURCE
RBR74#11100%&	1110	1/8	L, U	T, Q, A, B	R	P	NO SOURCE
RBR74#11300%&	1130	1/8	L, U	T, Q, A, B	R	P	NO SOURCE
RBR74#11400%&	1140	1/8	L, U	T, Q, A, B	R	P	NO SOURCE
RBR74#11500%&	1150	1/8	L, U	T, Q, A, B	R	P	NO SOURCE
RBR74#11700%&	1170	1/8	L, U	T, Q, A, B	R	P	NO SOURCE
	Resistance	Power	Terminal	Resistance	Level 1	Level 2	
Part Number	Value (Ohms)	Rating (W)	Characteristic (#)	Tolerance (%)	(FRL)(&)	(FRL)(&)	Manufacturer
RBR74#11800%&	1180	1/8	L, U	T, Q, A, B	R	P	NO SOURCE
RBR74#12000%&	1200	1/8	L, U	T, Q, A, B	R	P	NO SOURCE
RBR74#12100%&	1210	1/8	L, U	T, Q, A, B	R	P	NO SOURCE
RBR74#12300%&	1230	1/8	L, U	T, Q, A, B	R	P	NO SOURCE
RBR74#12400%&	1240	1/8	L, U	T, Q, A, B	R	P	NO SOURCE
RBR74#12600%&	1260	1/8	L, U	T, Q, A, B	R	P	NO SOURCE
RBR74#12700%&	1270	1/8	L, U	T, Q, A, B	R	P	NO SOURCE
RBR74#12900%&	1290	1/8	L, U	T, Q, A, B	R	P	NO SOURCE
RBR74#13000%&	1300	1/8	L, U	T, Q, A, B	R	P	NO SOURCE
RBR74#13200%&	1320	1/8	L, U	T, Q, A, B	R	P	NO SOURCE
RBR74#13300%&	1330	1/8	L, U	T, Q, A, B	R	P	NO SOURCE
RBR74#13500%&	1350	1/8	L, U	T, Q, A, B	R	P	NO SOURCE
RBR74#13700%&	1370	1/8	L, U	T, Q, A, B	R	P	NO SOURCE
RBR74#13800%&	1380	1/8	L, U	T, Q, A, B	R	P	NO SOURCE
	Resistance	Power	Terminal	Resistance	Level 1	Level 2	
Part Number	Value (Ohms)	Rating (W)	Characteristic (#)	Tolerance (%)	(FRL)(&)	(FRL)(&)	Manufacturer
RBR74#14000%&	1400	1/8	L, U	T, Q, A, B	R	P	NO SOURCE
RBR74#14200%&	1420	1/8	L, U	T, Q, A, B	R	P	NO SOURCE
RBR74#14300%&	1430	1/8	L, U	T, Q, A, B	R	P	NO SOURCE
RBR74#14500%&	1450	1/8	L, U	T, Q, A, B	R	P	NO SOURCE
RBR74#14700%&	1470	1/8	L, U	T, Q, A, B	R	P	NO SOURCE
RBR74#14900%&	1490	1/8	L, U	T, Q, A, B	R	P	NO SOURCE
RBR74#15000%&	1500	1/8	L, U	T, Q, A, B	R	P	NO SOURCE
RBR74#15200%&	1520	1/8	L, U	T, Q, A, B	R	P	NO SOURCE
RBR74#15400%&	1540	1/8	L, U	T, Q, A, B	R	P	NO SOURCE
RBR74#15600%&	1560	1/8	L, U	T, Q, A, B	R	P	NO SOURCE
RBR74#15800%&	1580	1/8	L, U	T, Q, A, B	R	P	NO SOURCE
RBR74#16000%&	1600	1/8	L, U	T, Q, A, B	R	P	NO SOURCE
RBR74#16200%&	1620	1/8	L, U	T, Q, A, B	R	P	NO SOURCE
RBR74#16400%&	1640	1/8	L, U	T, Q, A, B	R	P	NO SOURCE

	Resistance	Power	Terminal	Resistance	Level 1	Level 2	
Part Number	Value (Ohms)	Rating (W)	Characteristic (#)	Tolerance (%)	(FRL)(&)	(FRL)(&)	Manufacturer
RBR74#16500%&	1650	1/8	L, U	T, Q, A, B	R	P	NO SOURCE
RBR74#16700%&	1670	1/8	L, U	T, Q, A, B	R	P	NO SOURCE
RBR74#16900%&	1690	1/8	L, U	T, Q, A, B	R	P	NO SOURCE
RBR74#17200%&	1720	1/8	L, U	T, Q, A, B	R	P	NO SOURCE
RBR74#17400%&	1740	1/8	L, U	T, Q, A, B	R	P	NO SOURCE
RBR74#17600%&	1760	1/8	L, U	T, Q, A, B	R	P	NO SOURCE
RBR74#17800%&	1780	1/8	L, U	T, Q, A, B	R	P	NO SOURCE
RBR74#18000%&	1800	1/8	L, U	T, Q, A, B	R	P	NO SOURCE
RBR74#18200%&	1820	1/8	L, U	T, Q, A, B	R	P	NO SOURCE
RBR74#18400%&	1840	1/8	L, U	T, Q, A, B	R	P	NO SOURCE
RBR74#18700%&	1870	1/8	L, U	T, Q, A, B	R	P	NO SOURCE
RBR74#18900%&	1890	1/8	L, U	T, Q, A, B	R	P	NO SOURCE
RBR74#19100%&	1910	1/8	L, U	T, Q, A, B	R	P	NO SOURCE
RBR74#19300%&	1930	1/8	L, U	T, Q, A, B	R	P	NO SOURCE
	Resistance	Power	Terminal	Resistance	Level 1	Level 2	
Part Number	Value (Ohms)	Rating (W)	Characteristic (#)	Tolerance (%)	(FRL)(&)	(FRL)(&)	Manufacturer
RBR74#19600%&	1960	1/8	L, U	T, Q, A, B	R	P	NO SOURCE
RBR74#19800%&	1980	1/8	L, U	T, Q, A, B	R	P	NO SOURCE
RBR74#20000%&	2000	1/8	L, U	T, Q, A, B	R	P	NO SOURCE
RBR74#20300%&	2030	1/8	L, U	T, Q, A, B	R	P	NO SOURCE
RBR74#20500%&	2050	1/8	L, U	T, Q, A, B	R	P	NO SOURCE
RBR74#20800%&	2080	1/8	L, U	T, Q, A, B	R	P	NO SOURCE
RBR74#21000%&	2100	1/8	L, U	T, Q, A, B	R	P	NO SOURCE
RBR74#21300%&	2130	1/8	L, U	T, Q, A, B	R	P	NO SOURCE
RBR74#21500%&	2150	1/8	L, U	T, Q, A, B	R	P	NO SOURCE
RBR74#21800%&	2180	1/8	L, U	T, Q, A, B	R	P	NO SOURCE
RBR74#22100%&	2210	1/8	L, U	T, Q, A, B	R	P	NO SOURCE
RBR74#22300%&	2230	1/8	L, U	T, Q, A, B	R	P	NO SOURCE
RBR74#22600%&	2260	1/8	L, U	T, Q, A, B	R	P	NO SOURCE
RBR74#22900%&	2290	1/8	L, U	T, Q, A, B	R	P	NO SOURCE
	Resistance	Power	Terminal	Resistance	Level 1	Level 2	
Part Number	Value (Ohms)	Rating (W)	Characteristic (#)	Tolerance (%)	(FRL)(&)	(FRL)(&)	Manufacturer
RBR74#23200%&	2320	1/8	L, U	T, Q, A, B	R	P	NO SOURCE
RBR74#23400%&	2340	1/8	L, U	T, Q, A, B	R	P	NO SOURCE
RBR74#23700%&	2370	1/8	L, U	T, Q, A, B	R	P	NO SOURCE
RBR74#24000%&	2400	1/8	L, U	T, Q, A, B	R	P	NO SOURCE
RBR74#24300%&	2430	1/8	L, U	T, Q, A, B	R	P	NO SOURCE
RBR74#24600%&	2460	1/8	L, U	T, Q, A, B	R	P	NO SOURCE
RBR74#24900%&	2490	1/8	L, U	T, Q, A, B	R	P	NO SOURCE
RBR74#25200%&	2520	1/8	L, U	T, Q, A, B	R	P	NO SOURCE
RBR74#25500%&	2550	1/8	L, U	T, Q, A, B	R	P	NO SOURCE
RBR74#25800%&	2580	1/8	L, U	T, Q, A, B	R	P	NO SOURCE
RBR74#26100%&	2610	1/8	L, U	T, Q, A, B	R	P	NO SOURCE
RBR74#26400%&	2640	1/8	L, U	T, Q, A, B	R	P	NO SOURCE
RBR74#26700%&	2670	1/8	L, U	T, Q, A, B	R	P	NO SOURCE

RBR74#27100%&	2710	1/8	L, U	T, Q, A, B	R	P	NO SOURCE
	Resistance	Power	Terminal	Resistance	Level 1	Level 2	
Part Number	Value (Ohms)	Rating (W)	Characteristic (#)	Tolerance (%)	(FRL)(&)	(FRL)(&)	Manufacturer
RBR74#27400%&	2740	1/8	L, U	T, Q, A, B	R	P	NO SOURCE
RBR74#27700%&	2770	1/8	L, U	T, Q, A, B	R	P	NO SOURCE
RBR74#28000%&	2800	1/8	L, U	T, Q, A, B	R	P	NO SOURCE
RBR74#28400%&	2840	1/8	L, U	T, Q, A, B	R	P	NO SOURCE
RBR74#28700%&	2870	1/8	L, U	T, Q, A, B	R	P	NO SOURCE
RBR74#29100%&	2910	1/8	L, U	T, Q, A, B	R	P	NO SOURCE
RBR74#29400%&	2940	1/8	L, U	T, Q, A, B	R	P	NO SOURCE
RBR74#29800%&	2980	1/8	L, U	T, Q, A, B	R	P	NO SOURCE
RBR74#30100%&	3010	1/8	L, U	T, Q, A, B	R	P	NO SOURCE
RBR74#30500%&	3050	1/8	L, U	T, Q, A, B	R	P	NO SOURCE
RBR74#30900%&	3090	1/8	L, U	T, Q, A, B	R	P	NO SOURCE
RBR74#31200%&	3120	1/8	L, U	T, Q, A, B	R	P	NO SOURCE
RBR74#31600%&	3160	1/8	L, U	T, Q, A, B	R	P	NO SOURCE
RBR74#32000%&	3200	1/8	L, U	T, Q, A, B	R	P	NO SOURCE
	Resistance	Power	Terminal	Resistance	Level 1	Level 2	
Part Number	Value (Ohms)	Rating (W)	Characteristic (#)	Tolerance (%)	(FRL)(&)	(FRL)(&)	Manufacturer
RBR74#32400%&	3240	1/8	L, U	T, Q, A, B	R	P	NO SOURCE
RBR74#32800%&	3280	1/8	L, U	T, Q, A, B	R	P	NO SOURCE
RBR74#33200%&	3320	1/8	L, U	T, Q, A, B	R	P	NO SOURCE
RBR74#33600%&	3360	1/8	L, U	T, Q, A, B	R	P	NO SOURCE
RBR74#34000%&	3400	1/8	L, U	T, Q, A, B	R	P	NO SOURCE
RBR74#34400%&	3440	1/8	L, U	T, Q, A, B	R	P	NO SOURCE
RBR74#34800%&	3480	1/8	L, U	T, Q, A, B	R	P	NO SOURCE
RBR74#35200%&	3520	1/8	L, U	T, Q, A, B	R	P	NO SOURCE
RBR74#35700%&	3570	1/8	L, U	T, Q, A, B	R	P	NO SOURCE
RBR74#36100%&	3610	1/8	L, U	T, Q, A, B	R	P	NO SOURCE
RBR74#36500%&	3650	1/8	L, U	T, Q, A, B	R	P	NO SOURCE
RBR74#37000%&	3700	1/8	L, U	T, Q, A, B	R	P	NO SOURCE
	Resistance	Power	Terminal	Resistance	Level 1	Level 2	
Part Number	Value (Ohms)	Rating (W)	Characteristic (#)	Tolerance (%)	(FRL)(&)	(FRL)(&)	Manufacturer
RBR74#37400%&	3740	1/8	L, U	T, Q, A, B	R	P	NO SOURCE
RBR74#37900%&	3790	1/8	L, U	T, Q, A, B	R	P	NO SOURCE
RBR74#38300%&	3830	1/8	L, U	T, Q, A, B	R	P	NO SOURCE
RBR74#38800%&	3880	1/8	L, U	T, Q, A, B	R	P	NO SOURCE
RBR74#39200%&	3920	1/8	L, U	T, Q, A, B	R	P	NO SOURCE
RBR74#39700%&	3970	1/8	L, U	T, Q, A, B	R	P	NO SOURCE
RBR74#40200%&	4020	1/8	L, U	T, Q, A, B	R	P	NO SOURCE
RBR74#40700%&	4070	1/8	L, U	T, Q, A, B	R	P	NO SOURCE
RBR74#41200%&	4120	1/8	L, U	T, Q, A, B	R	P	NO SOURCE
RBR74#41700%&	4170	1/8	L, U	T, Q, A, B	R	P	NO SOURCE
RBR74#42200%&	4220	1/8	L, U	T, Q, A, B	R	P	NO SOURCE
RBR74#42700%&	4270	1/8	L, U	T, Q, A, B	R	P	NO SOURCE
RBR74#43200%&	4320	1/8	L, U	T, Q, A, B	R	P	NO SOURCE
RBR74#43700%&	4370	1/8	L, U	T, Q, A, B	R	P	NO SOURCE

	Resistance	Power	Terminal	Resistance	Level 1	Level 2	
Part Number	Value (Ohms)	Rating (W)	Characteristic (#)	Tolerance (%)	(FRL)(&)	(FRL)(&)	Manufacturer
RBR74#44200%&	4420	1/8	L, U	T, Q, A, B	R	P	NO SOURCE
RBR74#44800%&	4480	1/8	L, U	T, Q, A, B	R	P	NO SOURCE
RBR74#45300%&	4530	1/8	L, U	T, Q, A, B	R	P	NO SOURCE
RBR74#45900%&	4590	1/8	L, U	T, Q, A, B	R	P	NO SOURCE
RBR74#46400%&	4640	1/8	L, U	T, Q, A, B	R	P	NO SOURCE
RBR74#47000%&	4700	1/8	L, U	T, Q, A, B	R	P	NO SOURCE
RBR74#47500%&	4750	1/8	L, U	T, Q, A, B	R	P	NO SOURCE
RBR74#48100%&	4810	1/8	L, U	T, Q, A, B	R	P	NO SOURCE
RBR74#48700%&	4870	1/8	L, U	T, Q, A, B	R	P	NO SOURCE
RBR74#49300%&	4930	1/8	L, U	T, Q, A, B	R	P	NO SOURCE
RBR74#49900%&	4990	1/8	L, U	T, Q, A, B	R	P	NO SOURCE
RBR74#50500%&	5050	1/8	L, U	T, Q, A, B	R	P	NO SOURCE
RBR74#51100%&	5110	1/8	L, U	T, Q, A, B	R	P	NO SOURCE
RBR74#51700%&	5170	1/8	L, U	T, Q, A, B	R	P	NO SOURCE
	Resistance	Power	Terminal	Resistance	Level 1	Level 2	
Part Number	Value (Ohms)	Rating (W)	Characteristic (#)	Tolerance (%)	(FRL)(&)	(FRL)(&)	Manufacturer
RBR74#52300%&	5230	1/8	L, U	T, Q, A, B	R	P	NO SOURCE
RBR74#53000%&	5300	1/8	L, U	T, Q, A, B	R	P	NO SOURCE
RBR74#53600%&	5360	1/8	L, U	T, Q, A, B	R	P	NO SOURCE
RBR74#54200%&	5420	1/8	L, U	T, Q, A, B	R	P	NO SOURCE
RBR74#54900%&	5490	1/8	L, U	T, Q, A, B	R	P	NO SOURCE
RBR74#55600%&	5560	1/8	L, U	T, Q, A, B	R	P	NO SOURCE
RBR74#56200%&	5620	1/8	L, U	T, Q, A, B	R	P	NO SOURCE
RBR74#56900%&	5690	1/8	L, U	T, Q, A, B	R	P	NO SOURCE
RBR74#57600%&	5760	1/8	L, U	T, Q, A, B	R	P	NO SOURCE
RBR74#58300%&	5830	1/8	L, U	T, Q, A, B	R	P	NO SOURCE
RBR74#59000%&	5900	1/8	L, U	T, Q, A, B	R	P	NO SOURCE
RBR74#59700%&	5970	1/8	L, U	T, Q, A, B	R	P	NO SOURCE
RBR74#60400%&	6040	1/8	L, U	T, Q, A, B	R	P	NO SOURCE
RBR74#61200%&	6120	1/8	L, U	T, Q, A, B	R	P	NO SOURCE
	Resistance	Power	Terminal	Resistance	Level 1	Level 2	
Part Number	Value (Ohms)	Rating (W)	Characteristic (#)	Tolerance (%)	(FRL)(&)	(FRL)(&)	Manufacturer
RBR74#61900%&	6190	1/8	L, U	T, Q, A, B	R	P	NO SOURCE
RBR74#62600%&	6260	1/8	L, U	T, Q, A, B	R	P	NO SOURCE
RBR74#63400%&	6340	1/8	L, U	T, Q, A, B	R	P	NO SOURCE
RBR74#64200%&	6420	1/8	L, U	T, Q, A, B	R	P	NO SOURCE
RBR74#64900%&	6490	1/8	L, U	T, Q, A, B	R	P	NO SOURCE
RBR74#65700%&	6570	1/8	L, U	T, Q, A, B	R	P	NO SOURCE
	Resistance	Power	Terminal	Resistance	Level 1	Level 2	
Part Number	Value (Ohms)	Rating (W)	Characteristic (#)	Tolerance (%)	(FRL)(&)	(FRL)(&)	Manufacturer

RBR75 Wirewound Resistors

	Resistance	Power	Terminal	Resistance	Level 1	Level 2	
Part Number	Value (Ohms)	Rating (W)	Characteristic (#)	Tolerance (%)	(FRL)(&)	(FRL)(&)	Manufacturer
RBR75%10R00#&	10.00	1/8	L, U	T, Q, A, B	R	P	ULT
RBR75%10R10#&	10.10	1/8	L, U	T, Q, A, B	R	P	ULT
RBR75%10R20#&	10.20	1/8	L, U	T, Q, A, B	R	P	ULT
RBR75%10R40#&	10.40	1/8	L, U	T, Q, A, B	R	P	ULT
RBR75%10R50#&	10.50	1/8	L, U	T, Q, A, B	R	P	ULT
RBR75%10R60#&	10.60	1/8	L, U	T, Q, A, B	R	P	ULT
RBR75%10R70#&	10.70	1/8	L, U	T, Q, A, B	R	P	ULT
RBR75%10R90#&	10.90	1/8	L, U	T, Q, A, B	R	P	ULT
RBR75%11R00#&	11.00	1/8	L, U	T, Q, A, B	R	P	ULT
RBR75%11R10#&	11.10	1/8	L, U	T, Q, A, B	R	P	ULT
RBR75%11R30#&	11.30	1/8	L, U	T, Q, A, B	R	P	ULT
RBR75%11R40#&	11.40	1/8	L, U	T, Q, A, B	R	P	ULT
RBR75%11R50#&	11.50	1/8	L, U	T, Q, A, B	R	P	ULT
RBR75%11R70#&	11.70	1/8	L, U	T, Q, A, B	R	P	ULT
RBR75%11R80#&	11.80	1/8	L, U	T, Q, A, B	R	P	ULT
RBR75%12R00#&	12.00	1/8	L, U	T, Q, A, B	R	P	ULT
RBR75%12R10#&	12.10	1/8	L, U	T, Q, A, B	R	P	ULT
RBR75%12R30#&	12.30	1/8	L, U	T, Q, A, B	R	P	ULT
RBR75%12R40#&	12.40	1/8	L, U	T, Q, A, B	R	P	ULT
RBR75%12R60#&	12.60	1/8	L, U	T, Q, A, B	R	P	ULT
RBR75%12R70#&	12.70	1/8	L, U	T, Q, A, B	R	P	ULT
RBR75%12R90#&	12.90	1/8	L, U	T, Q, A, B	R	P	ULT
RBR75%13R00#&	13.00	1/8	L, U	T, Q, A, B	R	P	ULT
RBR75%13R20#&	13.20	1/8	L, U	T, Q, A, B	R	P	ULT
RBR75%13R30#&	13.30	1/8	L, U	T, Q, A, B	R	P	ULT
RBR75%13R50#&	13.50	1/8	L, U	T, Q, A, B	R	P	ULT
RBR75%13R70#&	13.70	1/8	L, U	T, Q, A, B	R	P	ULT
RBR75%13R80#&	13.80	1/8	L, U	T, Q, A, B	R	P	ULT
RBR75%14R00#&	14.00	1/8	L, U	T, Q, A, B	R	P	ULT
RBR75%14R20#&	14.20	1/8	L, U	T, Q, A, B	R	P	ULT
RBR75%14R30#&	14.30	1/8	L, U	T, Q, A, B	R	P	ULT
RBR75%14R50#&	14.50	1/8	L, U	T, Q, A, B	R	P	ULT
RBR75%14R70#&	14.70	1/8	L, U	T, Q, A, B	R	P	ULT
RBR75%14R90#&	14.90	1/8	L, U	T, Q, A, B	R	P	ULT
RBR75%15R00#&	15.00	1/8	L, U	T, Q, A, B	R	P	ULT
RBR75%15R20#&	15.20	1/8	L, U	T, Q, A, B	R	P	ULT
RBR75%15R40#&	15.40	1/8	L, U	T, Q, A, B	R	P	ULT
RBR75%15R60#&	15.60	1/8	L, U	T, Q, A, B	R	P	ULT
RBR75%15R80#&	15.80	1/8	L, U	T, Q, A, B	R	P	ULT
RBR75%16R00#&	16.00	1/8	L, U	T, Q, A, B	R	P	ULT
RBR75%16R20#&	16.20	1/8	L, U	T, Q, A, B	R	P	ULT
RBR75%16R40#&	16.40	1/8	L, U	T, Q, A, B	R	P	ULT
RBR75%16R50#&	16.50	1/8	L, U	T, Q, A, B	R	P	ULT
RBR75%16R70#&	16.70	1/8	L, U	T, Q, A, B	R	P	ULT
RBR75%16R90#&	16.90	1/8	L, U	T, Q, A, B	R	P	ULT

RBR75%17R20#&	17.20	1/8	L, U	T, Q, A, B	R	P	ULT
RBR75%17R40#&	17.40	1/8	L, U	T, Q, A, B	R	P	ULT
RBR75%17R60#&	17.60	1/8	L, U	T, Q, A, B	R	P	ULT
RBR75%17R80#&	17.80	1/8	L, U	T, Q, A, B	R	P	ULT
RBR75%18R00#&	18.00	1/8	L, U	T, Q, A, B	R	P	ULT
RBR75%18R20#&	18.20	1/8	L, U	T, Q, A, B	R	P	ULT
RBR75%18R40#&	18.40	1/8	L, U	T, Q, A, B	R	P	ULT
RBR75%18R70#&	18.70	1/8	L, U	T, Q, A, B	R	P	ULT
RBR75%18R90#&	18.90	1/8	L, U	T, Q, A, B	R	P	ULT
RBR75%19R10#&	19.10	1/8	L, U	T, Q, A, B	R	P	ULT
RBR75%19R30#&	19.30	1/8	L, U	T, Q, A, B	R	P	ULT
RBR75%19R60#&	19.60	1/8	L, U	T, Q, A, B	R	P	ULT
RBR75%19R80#&	19.80	1/8	L, U	T, Q, A, B	R	P	ULT
RBR75%20R00#&	20.00	1/8	L, U	T, Q, A, B	R	P	ULT
RBR75%20R30#&	20.30	1/8	L, U	T, Q, A, B	R	P	ULT
RBR75%20R50#&	20.50	1/8	L, U	T, Q, A, B	R	P	ULT
RBR75%20R80#&	20.80	1/8	L, U	T, Q, A, B	R	P	ULT
RBR75%21R00#&	21.00	1/8	L, U	T, Q, A, B	R	P	ULT
RBR75%21R30#&	21.30	1/8	L, U	T, Q, A, B	R	P	ULT
RBR75%21R50#&	21.50	1/8	L, U	T, Q, A, B	R	P	ULT
RBR75%21R80#&	21.80	1/8	L, U	T, Q, A, B	R	P	ULT
RBR75%22R10#&	22.10	1/8	L, U	T, Q, A, B	R	P	ULT
RBR75%22R30#&	22.30	1/8	L, U	T, Q, A, B	R	P	ULT
RBR75%22R60#&	22.60	1/8	L, U	T, Q, A, B	R	P	ULT
RBR75%22R90#&	22.90	1/8	L, U	T, Q, A, B	R	P	ULT
RBR75%23R20#&	23.20	1/8	L, U	T, Q, A, B	R	P	ULT
RBR75%23R40#&	23.40	1/8	L, U	T, Q, A, B	R	P	ULT
RBR75%23R70#&	23.70	1/8	L, U	T, Q, A, B	R	P	ULT
RBR75%24R00#&	24.00	1/8	L, U	T, Q, A, B	R	P	ULT
RBR75%24R30#&	24.30	1/8	L, U	T, Q, A, B	R	P	ULT
RBR75%24R60#&	24.60	1/8	L, U	T, Q, A, B	R	P	ULT
RBR75%24R90#&	24.90	1/8	L, U	T, Q, A, B	R	P	ULT
RBR75%25R20#&	25.20	1/8	L, U	T, Q, A, B	R	P	ULT
RBR75%25R50#&	25.50	1/8	L, U	T, Q, A, B	R	P	ULT
RBR75%25R80#&	25.80	1/8	L, U	T, Q, A, B	R	P	ULT
RBR75%26R10#&	26.10	1/8	L, U	T, Q, A, B	R	P	ULT
RBR75%26R40#&	26.40	1/8	L, U	T, Q, A, B	R	P	ULT
RBR75%26R70#&	26.70	1/8	L, U	T, Q, A, B	R	P	ULT
RBR75%27R10#&	27.10	1/8	L, U	T, Q, A, B	R	P	ULT
RBR75%27R40#&	27.40	1/8	L, U	T, Q, A, B	R	P	ULT
RBR75%27R70#&	27.70	1/8	L, U	T, Q, A, B	R	P	ULT
RBR75%28R00#&	28.00	1/8	L, U	T, Q, A, B	R	P	ULT
RBR75%28R40#&	28.40	1/8	L, U	T, Q, A, B	R	P	ULT
RBR75%28R70#&	28.70	1/8	L, U	T, Q, A, B	R	P	ULT
RBR75%29R10#&	29.10	1/8	L, U	T, Q, A, B	R	P	ULT
RBR75%29R40#&	29.40	1/8	L, U	T, Q, A, B	R	P	ULT
RBR75%29R80#&	29.80	1/8	L, U	T, Q, A, B	R	P	ULT

RBR75%30R10#&	30.10	1/8	L, U	T, Q, A, B	R	P	ULT
RBR75%30R50#&	30.50	1/8	L, U	T, Q, A, B	R	P	ULT
RBR75%30R90#&	30.90	1/8	L, U	T, Q, A, B	R	P	ULT
RBR75%31R20#&	31.20	1/8	L, U	T, Q, A, B	R	P	ULT
RBR75%31R60#&	31.60	1/8	L, U	T, Q, A, B	R	P	ULT
RBR75%32R00#&	32.00	1/8	L, U	T, Q, A, B	R	P	ULT
RBR75%32R40#&	32.40	1/8	L, U	T, Q, A, B	R	P	ULT
RBR75%32R80#&	32.80	1/8	L, U	T, Q, A, B	R	P	ULT
RBR75%33R20#&	33.20	1/8	L, U	T, Q, A, B	R	P	ULT
RBR75%33R60#&	33.60	1/8	L, U	T, Q, A, B	R	P	ULT
RBR75%34R00#&	34.00	1/8	L, U	T, Q, A, B	R	P	ULT
RBR75%34R40#&	34.40	1/8	L, U	T, Q, A, B	R	P	ULT
RBR75%34R80#&	34.80	1/8	L, U	T, Q, A, B	R	P	ULT
RBR75%35R20#&	35.20	1/8	L, U	T, Q, A, B	R	P	ULT
RBR75%35R70#&	35.70	1/8	L, U	T, Q, A, B	R	P	ULT
RBR75%36R10#&	36.10	1/8	L, U	T, Q, A, B	R	P	ULT
RBR75%36R50#&	36.50	1/8	L, U	T, Q, A, B	R	P	ULT
RBR75%37R00#&	37.00	1/8	L, U	T, Q, A, B	R	P	ULT
RBR75%37R40#&	37.40	1/8	L, U	T, Q, A, B	R	P	ULT
RBR75%37R90#&	37.90	1/8	L, U	T, Q, A, B	R	P	ULT
RBR75%38R30#&	38.30	1/8	L, U	T, Q, A, B	R	P	ULT
RBR75%38R80#&	38.80	1/8	L, U	T, Q, A, B	R	P	ULT
RBR75%39R20#&	39.20	1/8	L, U	T, Q, A, B	R	P	ULT
RBR75%39R70#&	39.70	1/8	L, U	T, Q, A, B	R	P	ULT
RBR75%40R20#&	40.20	1/8	L, U	T, Q, A, B	R	P	ULT
RBR75%40R70#&	40.70	1/8	L, U	T, Q, A, B	R	P	ULT
RBR75%41R20#&	41.20	1/8	L, U	T, Q, A, B	R	P	ULT
RBR75%41R70#&	41.70	1/8	L, U	T, Q, A, B	R	P	ULT
RBR75%42R20#&	42.20	1/8	L, U	T, Q, A, B	R	P	ULT
RBR75%42R70#&	42.70	1/8	L, U	T, Q, A, B	R	P	ULT
RBR75%43R20#&	43.20	1/8	L, U	T, Q, A, B	R	P	ULT
RBR75%43R70#&	43.70	1/8	L, U	T, Q, A, B	R	P	ULT
RBR75%44R20#&	44.20	1/8	L, U	T, Q, A, B	R	P	ULT
RBR75%44R80#&	44.80	1/8	L, U	T, Q, A, B	R	P	ULT
RBR75%45R30#&	45.30	1/8	L, U	T, Q, A, B	R	P	ULT
RBR75%45R90#&	45.90	1/8	L, U	T, Q, A, B	R	P	ULT
RBR75%46R40#&	46.40	1/8	L, U	T, Q, A, B	R	P	ULT
RBR75%47R00#&	47.00	1/8	L, U	T, Q, A, B	R	P	ULT
RBR75%47R50#&	47.50	1/8	L, U	T, Q, A, B	R	P	ULT
RBR75%48R10#&	48.10	1/8	L, U	T, Q, A, B	R	P	ULT
RBR75%48R70#&	48.70	1/8	L, U	T, Q, A, B	R	P	ULT
RBR75%49R30#&	49.30	1/8	L, U	T, Q, A, B	R	P	ULT
RBR75%49R90#&	49.90	1/8	L, U	T, Q, A, B	R	P	ULT
RBR75%50R50#&	50.50	1/8	L, U	T, Q, A, B	R	P	ULT
RBR75%51R10#&	51.10	1/8	L, U	T, Q, A, B	R	P	ULT
RBR75%51R70#&	51.70	1/8	L, U	T, Q, A, B	R	P	ULT
RBR75%52R30#&	52.30	1/8	L, U	T, Q, A, B	R	P	ULT

RBR75%53R00#&	53.00	1/8	L, U	T, Q, A, B	R	P	ULT
RBR75%53R60#&	53.60	1/8	L, U	T, Q, A, B	R	P	ULT
RBR75%54R20#&	54.20	1/8	L, U	T, Q, A, B	R	P	ULT
RBR75%54R90#&	54.90	1/8	L, U	T, Q, A, B	R	P	ULT
RBR75%55R60#&	55.60	1/8	L, U	T, Q, A, B	R	P	ULT
RBR75%56R20#&	56.20	1/8	L, U	T, Q, A, B	R	P	ULT
RBR75%56R90#&	56.90	1/8	L, U	T, Q, A, B	R	P	ULT
RBR75%57R60#&	57.60	1/8	L, U	T, Q, A, B	R	P	ULT
RBR75%58R30#&	58.30	1/8	L, U	T, Q, A, B	R	P	ULT
RBR75%59R00#&	59.00	1/8	L, U	T, Q, A, B	R	P	ULT
RBR75%59R70#&	59.70	1/8	L, U	T, Q, A, B	R	P	ULT
RBR75%60R40#&	60.40	1/8	L, U	T, Q, A, B	R	P	ULT
RBR75%61R20#&	61.20	1/8	L, U	T, Q, A, B	R	P	ULT
RBR75%61R90#&	61.90	1/8	L, U	T, Q, A, B	R	P	ULT
RBR75%62R60#&	62.60	1/8	L, U	T, Q, A, B	R	P	ULT
RBR75%63R40#&	63.40	1/8	L, U	T, Q, A, B	R	P	ULT
RBR75%64R20#&	64.20	1/8	L, U	T, Q, A, B	R	P	ULT
RBR75%64R90#&	64.90	1/8	L, U	T, Q, A, B	R	P	ULT
RBR75%65R70#&	65.70	1/8	L, U	T, Q, A, B	R	P	ULT
RBR75%66R50#&	66.50	1/8	L, U	T, Q, A, B	R	P	ULT
RBR75%67R30#&	67.30	1/8	L, U	T, Q, A, B	R	P	ULT
RBR75%68R10#&	68.10	1/8	L, U	T, Q, A, B	R	P	ULT
RBR75%69R00#&	69.00	1/8	L, U	T, Q, A, B	R	P	ULT
RBR75%69R80#&	69.80	1/8	L, U	T, Q, A, B	R	P	ULT
RBR75%70R60#&	70.60	1/8	L, U	T, Q, A, B	R	P	ULT
RBR75%71R50#&	71.50	1/8	L, U	T, Q, A, B	R	P	ULT
RBR75%72R30#&	72.30	1/8	L, U	T, Q, A, B	R	P	ULT
RBR75%73R20#&	73.20	1/8	L, U	T, Q, A, B	R	P	ULT
RBR75%74R10#&	74.10	1/8	L, U	T, Q, A, B	R	P	ULT
RBR75%75R00#&	75.00	1/8	L, U	T, Q, A, B	R	P	ULT
RBR75%75R90#&	75.90	1/8	L, U	T, Q, A, B	R	P	ULT
RBR75%76R80#&	76.80	1/8	L, U	T, Q, A, B	R	P	ULT
RBR75%77R70#&	77.70	1/8	L, U	T, Q, A, B	R	P	ULT
RBR75%78R70#&	78.70	1/8	L, U	T, Q, A, B	R	P	ULT
RBR75%79R60#&	79.60	1/8	L, U	T, Q, A, B	R	P	ULT
RBR75%80R60#&	80.60	1/8	L, U	T, Q, A, B	R	P	ULT
RBR75%81R60#&	81.60	1/8	L, U	T, Q, A, B	R	P	ULT
RBR75%82R50#&	82.50	1/8	L, U	T, Q, A, B	R	P	ULT
RBR75%83R50#&	83.50	1/8	L, U	T, Q, A, B	R	P	ULT
RBR75%84R50#&	84.50	1/8	L, U	T, Q, A, B	R	P	ULT
RBR75%85R60#&	85.60	1/8	L, U	T, Q, A, B	R	P	ULT
RBR75%86R60#&	86.60	1/8	L, U	T, Q, A, B	R	P	ULT
RBR75%87R60#&	87.60	1/8	L, U	T, Q, A, B	R	P	ULT
RBR75%88R70#&	88.70	1/8	L, U	T, Q, A, B	R	P	ULT
RBR75%89R80#&	89.80	1/8	L, U	T, Q, A, B	R	P	ULT
RBR75%90R90#&	90.90	1/8	L, U	T, Q, A, B	R	P	ULT
RBR75%92R00#&	92.00	1/8	L, U	T, Q, A, B	R	P	ULT

RBR75%93R10#&	93.10	1/8	L, U	T, Q, A, B	R	P	ULT
RBR75%94R20#&	94.20	1/8	L, U	T, Q, A, B	R	P	ULT
RBR75%95R30#&	95.30	1/8	L, U	T, Q, A, B	R	P	ULT
RBR75%96R50#&	96.50	1/8	L, U	T, Q, A, B	R	P	ULT
RBR75%97R60#&	97.60	1/8	L, U	T, Q, A, B	R	P	ULT
RBR75%98R80#&	98.80	1/8	L, U	T, Q, A, B	R	P	ULT
RBR75%100R0#&	100.0	1/8	L, U	T, Q, A, B	R	P	ULT
RBR75%101R0#&	101.0	1/8	L, U	T, Q, A, B	R	P	ULT
RBR75%102R0#&	102.0	1/8	L, U	T, Q, A, B	R	P	ULT
RBR75%104R0#&	104.0	1/8	L, U	T, Q, A, B	R	P	ULT
RBR75%105R0#&	105.0	1/8	L, U	T, Q, A, B	R	P	ULT
RBR75%106R0#&	106.0	1/8	L, U	T, Q, A, B	R	P	ULT
RBR75%107R0#&	107.0	1/8	L, U	T, Q, A, B	R	P	ULT
RBR75%109R0#&	109.0	1/8	L, U	T, Q, A, B	R	P	ULT
RBR75%110R0#&	110.0	1/8	L, U	T, Q, A, B	R	P	ULT
RBR75%111R0#&	111.0	1/8	L, U	T, Q, A, B	R	P	ULT
RBR75%113R0#&	113.0	1/8	L, U	T, Q, A, B	R	P	ULT
RBR75%114R0#&	114.0	1/8	L, U	T, Q, A, B	R	P	ULT
RBR75%115R0#&	115.0	1/8	L, U	T, Q, A, B	R	P	ULT
RBR75%117R0#&	117.0	1/8	L, U	T, Q, A, B	R	P	ULT
RBR75%118R0#&	118.0	1/8	L, U	T, Q, A, B	R	P	ULT
RBR75%120R0#&	120.0	1/8	L, U	T, Q, A, B	R	P	ULT
RBR75%121R0#&	121.0	1/8	L, U	T, Q, A, B	R	P	ULT
RBR75%123R0#&	123.0	1/8	L, U	T, Q, A, B	R	P	ULT
RBR75%124R0#&	124.0	1/8	L, U	T, Q, A, B	R	P	ULT
RBR75%126R0#&	126.0	1/8	L, U	T, Q, A, B	R	P	ULT
RBR75%127R0#&	127.0	1/8	L, U	T, Q, A, B	R	P	ULT
RBR75%129R0#&	129.0	1/8	L, U	T, Q, A, B	R	P	ULT
RBR75%130R0#&	130.0	1/8	L, U	T, Q, A, B	R	P	ULT
RBR75%132R0#&	132.0	1/8	L, U	T, Q, A, B	R	P	ULT
RBR75%133R0#&	133.0	1/8	L, U	T, Q, A, B	R	P	ULT
RBR75%135R0#&	135.0	1/8	L, U	T, Q, A, B	R	P	ULT
RBR75%137R0#&	137.0	1/8	L, U	T, Q, A, B	R	P	ULT
RBR75%138R0#&	138.0	1/8	L, U	T, Q, A, B	R	P	ULT
RBR75%140R0#&	140.0	1/8	L, U	T, Q, A, B	R	P	ULT
RBR75%142R0#&	142.0	1/8	L, U	T, Q, A, B	R	P	ULT
RBR75%143R0#&	143.0	1/8	L, U	T, Q, A, B	R	P	ULT
RBR75%145R0#&	145.0	1/8	L, U	T, Q, A, B	R	P	ULT
RBR75%147R0#&	147.0	1/8	L, U	T, Q, A, B	R	P	ULT
RBR75%149R0#&	149.0	1/8	L, U	T, Q, A, B	R	P	ULT
RBR75%150R0#&	150.0	1/8	L, U	T, Q, A, B	R	P	ULT
RBR75%152R0#&	152.0	1/8	L, U	T, Q, A, B	R	P	ULT
RBR75%154R0#&	154.0	1/8	L, U	T, Q, A, B	R	P	ULT
RBR75%156R0#&	156.0	1/8	L, U	T, Q, A, B	R	P	ULT
RBR75%158R0#&	158.0	1/8	L, U	T, Q, A, B	R	P	ULT
RBR75%160R0#&	160.0	1/8	L, U	T, Q, A, B	R	P	ULT
RBR75%162R0#&	162.0	1/8	L, U	T, Q, A, B	R	P	ULT

RBR75%164R0#&	164.0	1/8	L, U	T, Q, A, B	R	P	ULT
RBR75%165R0#&	165.0	1/8	L, U	T, Q, A, B	R	P	ULT
RBR75%167R0#&	167.0	1/8	L, U	T, Q, A, B	R	P	ULT
RBR75%169R0#&	169.0	1/8	L, U	T, Q, A, B	R	P	ULT
RBR75%172R0#&	172.0	1/8	L, U	T, Q, A, B	R	P	ULT
RBR75%174R0#&	174.0	1/8	L, U	T, Q, A, B	R	P	ULT
RBR75%176R0#&	176.0	1/8	L, U	T, Q, A, B	R	P	ULT
RBR75%178R0#&	178.0	1/8	L, U	T, Q, A, B	R	P	ULT
RBR75%180R0#&	180.0	1/8	L, U	T, Q, A, B	R	P	ULT
RBR75%182R0#&	182.0	1/8	L, U	T, Q, A, B	R	P	ULT
RBR75%184R0#&	184.0	1/8	L, U	T, Q, A, B	R	P	ULT
RBR75%187R0#&	187.0	1/8	L, U	T, Q, A, B	R	P	ULT
RBR75%189R0#&	189.0	1/8	L, U	T, Q, A, B	R	P	ULT
RBR75%191R0#&	191.0	1/8	L, U	T, Q, A, B	R	P	ULT
RBR75%193R0#&	193.0	1/8	L, U	T, Q, A, B	R	P	ULT
RBR75%196R0#&	196.0	1/8	L, U	T, Q, A, B	R	P	ULT
RBR75%198R0#&	198.0	1/8	L, U	T, Q, A, B	R	P	ULT
RBR75%200R0#&	200.0	1/8	L, U	T, Q, A, B	R	P	ULT
RBR75%203R0#&	203.0	1/8	L, U	T, Q, A, B	R	P	ULT
RBR75%205R0#&	205.0	1/8	L, U	T, Q, A, B	R	P	ULT
RBR75%208R0#&	208.0	1/8	L, U	T, Q, A, B	R	P	ULT
RBR75%210R0#&	210.0	1/8	L, U	T, Q, A, B	R	P	ULT
RBR75%213R0#&	213.0	1/8	L, U	T, Q, A, B	R	P	ULT
RBR75%215R0#&	215.0	1/8	L, U	T, Q, A, B	R	P	ULT
RBR75%218R0#&	218.0	1/8	L, U	T, Q, A, B	R	P	ULT
RBR75%221R0#&	221.0	1/8	L, U	T, Q, A, B	R	P	ULT
RBR75%223R0#&	223.0	1/8	L, U	T, Q, A, B	R	P	ULT
RBR75%226R0#&	226.0	1/8	L, U	T, Q, A, B	R	P	ULT
RBR75%229R0#&	229.0	1/8	L, U	T, Q, A, B	R	P	ULT
RBR75%232R0#&	232.0	1/8	L, U	T, Q, A, B	R	P	ULT
RBR75%234R0#&	234.0	1/8	L, U	T, Q, A, B	R	P	ULT
RBR75%237R0#&	237.0	1/8	L, U	T, Q, A, B	R	P	ULT
RBR75%240R0#&	240.0	1/8	L, U	T, Q, A, B	R	P	ULT
RBR75%243R0#&	243.0	1/8	L, U	T, Q, A, B	R	P	ULT
RBR75%246R0#&	246.0	1/8	L, U	T, Q, A, B	R	P	ULT
RBR75%249R0#&	249.0	1/8	L, U	T, Q, A, B	R	P	ULT
RBR75%252R0#&	252.0	1/8	L, U	T, Q, A, B	R	P	ULT
RBR75%255R0#&	255.0	1/8	L, U	T, Q, A, B	R	P	ULT
RBR75%258R0#&	258.0	1/8	L, U	T, Q, A, B	R	P	ULT
RBR75%261R0#&	261.0	1/8	L, U	T, Q, A, B	R	P	ULT
RBR75%264R0#&	264.0	1/8	L, U	T, Q, A, B	R	P	ULT
RBR75%267R0#&	267.0	1/8	L, U	T, Q, A, B	R	P	ULT
RBR75%271R0#&	271.0	1/8	L, U	T, Q, A, B	R	P	ULT
RBR75%274R0#&	274.0	1/8	L, U	T, Q, A, B	R	P	ULT
RBR75%277R0#&	277.0	1/8	L, U	T, Q, A, B	R	P	ULT
RBR75%280R0#&	280.0	1/8	L, U	T, Q, A, B	R	P	ULT
RBR75%284R0#&	284.0	1/8	L, U	T, Q, A, B	R	P	ULT

RBR75%287R0#&	287.0	1/8	L, U	T, Q, A, B	R	P	ULT
RBR75%291R0#&	291.0	1/8	L, U	T, Q, A, B	R	P	ULT
RBR75%294R0#&	294.0	1/8	L, U	T, Q, A, B	R	P	ULT
RBR75%298R0#&	298.0	1/8	L, U	T, Q, A, B	R	P	ULT
RBR75%301R0#&	301.0	1/8	L, U	T, Q, A, B	R	P	ULT
RBR75%305R0#&	305.0	1/8	L, U	T, Q, A, B	R	P	ULT
RBR75%309R0#&	309.0	1/8	L, U	T, Q, A, B	R	P	ULT
RBR75%312R0#&	312.0	1/8	L, U	T, Q, A, B	R	P	ULT
RBR75%316R0#&	316.0	1/8	L, U	T, Q, A, B	R	P	ULT
RBR75%320R0#&	320.0	1/8	L, U	T, Q, A, B	R	P	ULT
RBR75%324R0#&	324.0	1/8	L, U	T, Q, A, B	R	P	ULT
RBR75%328R0#&	328.0	1/8	L, U	T, Q, A, B	R	P	ULT
RBR75%332R0#&	332.0	1/8	L, U	T, Q, A, B	R	P	ULT
RBR75%336R0#&	336.0	1/8	L, U	T, Q, A, B	R	P	ULT
RBR75%340R0#&	340.0	1/8	L, U	T, Q, A, B	R	P	ULT
RBR75%344R0#&	344.0	1/8	L, U	T, Q, A, B	R	P	ULT
RBR75%348R0#&	348.0	1/8	L, U	T, Q, A, B	R	P	ULT
RBR75%352R0#&	352.0	1/8	L, U	T, Q, A, B	R	P	ULT
RBR75%357R0#&	357.0	1/8	L, U	T, Q, A, B	R	P	ULT
RBR75%361R0#&	361.0	1/8	L, U	T, Q, A, B	R	P	ULT
RBR75%365R0#&	365.0	1/8	L, U	T, Q, A, B	R	P	ULT
RBR75%370R0#&	370.0	1/8	L, U	T, Q, A, B	R	P	ULT
RBR75%374R0#&	374.0	1/8	L, U	T, Q, A, B	R	P	ULT
RBR75%379R0#&	379.0	1/8	L, U	T, Q, A, B	R	P	ULT
RBR75%383R0#&	383.0	1/8	L, U	T, Q, A, B	R	P	ULT
RBR75%388R0#&	388.0	1/8	L, U	T, Q, A, B	R	P	ULT
RBR75%392R0#&	392.0	1/8	L, U	T, Q, A, B	R	P	ULT
RBR75%397R0#&	397.0	1/8	L, U	T, Q, A, B	R	P	ULT
RBR75%402R0#&	402.0	1/8	L, U	T, Q, A, B	R	P	ULT
RBR75%407R0#&	407.0	1/8	L, U	T, Q, A, B	R	P	ULT
RBR75%412R0#&	412.0	1/8	L, U	T, Q, A, B	R	P	ULT
RBR75%417R0#&	417.0	1/8	L, U	T, Q, A, B	R	P	ULT
RBR75%422R0#&	422.0	1/8	L, U	T, Q, A, B	R	P	ULT
RBR75%427R0#&	427.0	1/8	L, U	T, Q, A, B	R	P	ULT
RBR75%432R0#&	432.0	1/8	L, U	T, Q, A, B	R	P	ULT
RBR75%437R0#&	437.0	1/8	L, U	T, Q, A, B	R	P	ULT
RBR75%442R0#&	442.0	1/8	L, U	T, Q, A, B	R	P	ULT
RBR75%448R0#&	448.0	1/8	L, U	T, Q, A, B	R	P	ULT
RBR75%453R0#&	453.0	1/8	L, U	T, Q, A, B	R	P	ULT
RBR75%459R0#&	459.0	1/8	L, U	T, Q, A, B	R	P	ULT
RBR75%464R0#&	464.0	1/8	L, U	T, Q, A, B	R	P	ULT
RBR75%470R0#&	470.0	1/8	L, U	T, Q, A, B	R	P	ULT
RBR75%475R0#&	475.0	1/8	L, U	T, Q, A, B	R	P	ULT
RBR75%481R0#&	481.0	1/8	L, U	T, Q, A, B	R	P	ULT
RBR75%487R0#&	487.0	1/8	L, U	T, Q, A, B	R	P	ULT
RBR75%493R0#&	493.0	1/8	L, U	T, Q, A, B	R	P	ULT
RBR75%499R0#&	499.0	1/8	L, U	T, Q, A, B	R	P	ULT

RBR75%505R0#&	505.0	1/8	L, U	T, Q, A, B	R	P	ULT
RBR75%511R0#&	511.0	1/8	L, U	T, Q, A, B	R	P	ULT
RBR75%517R0#&	517.0	1/8	L, U	T, Q, A, B	R	P	ULT
RBR75%523R0#&	523.0	1/8	L, U	T, Q, A, B	R	P	ULT
RBR75%530R0#&	530.0	1/8	L, U	T, Q, A, B	R	P	ULT
RBR75%536R0#&	536.0	1/8	L, U	T, Q, A, B	R	P	ULT
RBR75%542R0#&	542.0	1/8	L, U	T, Q, A, B	R	P	ULT
RBR75%549R0#&	549.0	1/8	L, U	T, Q, A, B	R	P	ULT
RBR75%556R0#&	556.0	1/8	L, U	T, Q, A, B	R	P	ULT
RBR75%562R0#&	562.0	1/8	L, U	T, Q, A, B	R	P	ULT
RBR75%569R0#&	569.0	1/8	L, U	T, Q, A, B	R	P	ULT
RBR75%576R0#&	576.0	1/8	L, U	T, Q, A, B	R	P	ULT
RBR75%583R0#&	583.0	1/8	L, U	T, Q, A, B	R	P	ULT
RBR75%590R0#&	590.0	1/8	L, U	T, Q, A, B	R	P	ULT
RBR75%597R0#&	597.0	1/8	L, U	T, Q, A, B	R	P	ULT
RBR75%604R0#&	604.0	1/8	L, U	T, Q, A, B	R	P	ULT
RBR75%612R0#&	612.0	1/8	L, U	T, Q, A, B	R	P	ULT
RBR75%619R0#&	619.0	1/8	L, U	T, Q, A, B	R	P	ULT
RBR75%626R0#&	626.0	1/8	L, U	T, Q, A, B	R	P	ULT
RBR75%634R0#&	634.0	1/8	L, U	T, Q, A, B	R	P	ULT
RBR75%642R0#&	642.0	1/8	L, U	T, Q, A, B	R	P	ULT
RBR75%649R0#&	649.0	1/8	L, U	T, Q, A, B	R	P	ULT
RBR75%657R0#&	657.0	1/8	L, U	T, Q, A, B	R	P	ULT
RBR75%665R0#&	665.0	1/8	L, U	T, Q, A, B	R	P	ULT
RBR75%673R0#&	673.0	1/8	L, U	T, Q, A, B	R	P	ULT
RBR75%681R0#&	681.0	1/8	L, U	T, Q, A, B	R	P	ULT
RBR75%690R0#&	690.0	1/8	L, U	T, Q, A, B	R	P	ULT
RBR75%698R0#&	698.0	1/8	L, U	T, Q, A, B	R	P	ULT
RBR75%706R0#&	706.0	1/8	L, U	T, Q, A, B	R	P	ULT
RBR75%715R0#&	715.0	1/8	L, U	T, Q, A, B	R	P	ULT
RBR75%723R0#&	723.0	1/8	L, U	T, Q, A, B	R	P	ULT
RBR75%732R0#&	732.0	1/8	L, U	T, Q, A, B	R	P	ULT
RBR75%741R0#&	741.0	1/8	L, U	T, Q, A, B	R	P	ULT
RBR75%750R0#&	750.0	1/8	L, U	T, Q, A, B	R	P	ULT
RBR75%759R0#&	759.0	1/8	L, U	T, Q, A, B	R	P	ULT
RBR75%768R0#&	768.0	1/8	L, U	T, Q, A, B	R	P	ULT
RBR75%777R0#&	777.0	1/8	L, U	T, Q, A, B	R	P	ULT
RBR75%787R0#&	787.0	1/8	L, U	T, Q, A, B	R	P	ULT
RBR75%796R0#&	796.0	1/8	L, U	T, Q, A, B	R	P	ULT
RBR75%806R0#&	806.0	1/8	L, U	T, Q, A, B	R	P	ULT
RBR75%816R0#&	816.0	1/8	L, U	T, Q, A, B	R	P	ULT
RBR75%825R0#&	825.0	1/8	L, U	T, Q, A, B	R	P	ULT
RBR75%835R0#&	835.0	1/8	L, U	T, Q, A, B	R	P	ULT
RBR75%845R0#&	845.0	1/8	L, U	T, Q, A, B	R	P	ULT
RBR75%856R0#&	856.0	1/8	L, U	T, Q, A, B	R	P	ULT
RBR75%866R0#&	866.0	1/8	L, U	T, Q, A, B	R	P	ULT
RBR75%876R0#&	876.0	1/8	L, U	T, Q, A, B	R	P	ULT

RBR75%887R0#&	887.0	1/8	L, U	T, Q, A, B	R	P	ULT
RBR75%898R0#&	898.0	1/8	L, U	T, Q, A, B	R	P	ULT
RBR75%909R0#&	909.0	1/8	L, U	T, Q, A, B	R	P	ULT
RBR75%920R0#&	920.0	1/8	L, U	T, Q, A, B	R	P	ULT
RBR75%931R0#&	931.0	1/8	L, U	T, Q, A, B	R	P	ULT
RBR75%942R0#&	942.0	1/8	L, U	T, Q, A, B	R	P	ULT
RBR75%953R0#&	953.0	1/8	L, U	T, Q, A, B	R	P	ULT
RBR75%965R0#&	965.0	1/8	L, U	T, Q, A, B	R	P	ULT
RBR75%976R0#&	976.0	1/8	L, U	T, Q, A, B	R	P	ULT
RBR75%988R0#&	988.0	1/8	L, U	T, Q, A, B	R	P	ULT
RBR75%10000#&	1,000	1/8	L, U	T, Q, A, B	R	P	ULT
RBR75%10100#&	1,010	1/8	L, U	T, Q, A, B	R	P	ULT
RBR75%10200#&	1,020	1/8	L, U	T, Q, A, B	R	P	ULT
RBR75%10400#&	1,040	1/8	L, U	T, Q, A, B	R	P	ULT
RBR75%10500#&	1,050	1/8	L, U	T, Q, A, B	R	P	ULT
RBR75%10600#&	1,060	1/8	L, U	T, Q, A, B	R	P	ULT
RBR75%10700#&	1,070	1/8	L, U	T, Q, A, B	R	P	ULT
RBR75%10900#&	1,090	1/8	L, U	T, Q, A, B	R	P	ULT
RBR75%11000#&	1,100	1/8	L, U	T, Q, A, B	R	P	ULT
RBR75%11100#&	1,110	1/8	L, U	T, Q, A, B	R	P	ULT
RBR75%11300#&	1,130	1/8	L, U	T, Q, A, B	R	P	ULT
RBR75%11400#&	1,140	1/8	L, U	T, Q, A, B	R	P	ULT
RBR75%11500#&	1,150	1/8	L, U	T, Q, A, B	R	P	ULT
RBR75%11700#&	1,170	1/8	L, U	T, Q, A, B	R	P	ULT
RBR75%11800#&	1,180	1/8	L, U	T, Q, A, B	R	P	ULT
RBR75%12000#&	1,200	1/8	L, U	T, Q, A, B	R	P	ULT
RBR75%12100#&	1,210	1/8	L, U	T, Q, A, B	R	P	ULT
RBR75%12300#&	1,230	1/8	L, U	T, Q, A, B	R	P	ULT
RBR75%12400#&	1,240	1/8	L, U	T, Q, A, B	R	P	ULT
RBR75%12600#&	1,260	1/8	L, U	T, Q, A, B	R	P	ULT
RBR75%12700#&	1,270	1/8	L, U	T, Q, A, B	R	P	ULT
RBR75%12900#&	1,290	1/8	L, U	T, Q, A, B	R	P	ULT
RBR75%13000#&	1,300	1/8	L, U	T, Q, A, B	R	P	ULT
RBR75%13200#&	1,320	1/8	L, U	T, Q, A, B	R	P	ULT
RBR75%13300#&	1,330	1/8	L, U	T, Q, A, B	R	P	ULT
RBR75%13500#&	1,350	1/8	L, U	T, Q, A, B	R	P	ULT
RBR75%13700#&	1,370	1/8	L, U	T, Q, A, B	R	P	ULT
RBR75%13800#&	1,380	1/8	L, U	T, Q, A, B	R	P	ULT
RBR75%14000#&	1,400	1/8	L, U	T, Q, A, B	R	P	ULT
RBR75%14200#&	1,420	1/8	L, U	T, Q, A, B	R	P	ULT
RBR75%14300#&	1,430	1/8	L, U	T, Q, A, B	R	P	ULT
RBR75%14500#&	1,450	1/8	L, U	T, Q, A, B	R	P	ULT
RBR75%14700#&	1,470	1/8	L, U	T, Q, A, B	R	P	ULT
RBR75%14900#&	1,490	1/8	L, U	T, Q, A, B	R	P	ULT
RBR75%15000#&	1,500	1/8	L, U	T, Q, A, B	R	P	ULT
RBR75%15200#&	1,520	1/8	L, U	T, Q, A, B	R	P	ULT
RBR75%15400#&	1,540	1/8	L, U	T, Q, A, B	R	P	ULT

RBR75%15600#&	1,560	1/8	L, U	T, Q, A, B	R	P	ULT
RBR75%15800#&	1,580	1/8	L, U	T, Q, A, B	R	P	ULT
RBR75%16000#&	1,600	1/8	L, U	T, Q, A, B	R	P	ULT
RBR75%16200#&	1,620	1/8	L, U	T, Q, A, B	R	P	ULT
RBR75%16400#&	1,640	1/8	L, U	T, Q, A, B	R	P	ULT
RBR75%16500#&	1,650	1/8	L, U	T, Q, A, B	R	P	ULT
RBR75%16700#&	1,670	1/8	L, U	T, Q, A, B	R	P	ULT
RBR75%16900#&	1,690	1/8	L, U	T, Q, A, B	R	P	ULT
RBR75%17200#&	1,720	1/8	L, U	T, Q, A, B	R	P	ULT
RBR75%17400#&	1,740	1/8	L, U	T, Q, A, B	R	P	ULT
RBR75%17600#&	1,760	1/8	L, U	T, Q, A, B	R	P	ULT
RBR75%17800#&	1,780	1/8	L, U	T, Q, A, B	R	P	ULT
RBR75%18000#&	1,800	1/8	L, U	T, Q, A, B	R	P	ULT
RBR75%18200#&	1,820	1/8	L, U	T, Q, A, B	R	P	ULT
RBR75%18400#&	1,840	1/8	L, U	T, Q, A, B	R	P	ULT
RBR75%18700#&	1,870	1/8	L, U	T, Q, A, B	R	P	ULT
RBR75%18900#&	1,890	1/8	L, U	T, Q, A, B	R	P	ULT
RBR75%19100#&	1,910	1/8	L, U	T, Q, A, B	R	P	ULT
RBR75%19300#&	1,930	1/8	L, U	T, Q, A, B	R	P	ULT
RBR75%19600#&	1,960	1/8	L, U	T, Q, A, B	R	P	ULT
RBR75%19800#&	1,980	1/8	L, U	T, Q, A, B	R	P	ULT
RBR75%20000#&	2,000	1/8	L, U	T, Q, A, B	R	P	ULT
RBR75%20300#&	2,030	1/8	L, U	T, Q, A, B	R	P	ULT
RBR75%20500#&	2,050	1/8	L, U	T, Q, A, B	R	P	ULT
RBR75%20800#&	2,080	1/8	L, U	T, Q, A, B	R	P	ULT
RBR75%21000#&	2,100	1/8	L, U	T, Q, A, B	R	P	ULT
RBR75%21300#&	2,130	1/8	L, U	T, Q, A, B	R	P	ULT
RBR75%21500#&	2,150	1/8	L, U	T, Q, A, B	R	P	ULT
RBR75%21800#&	2,180	1/8	L, U	T, Q, A, B	R	P	ULT
RBR75%22100#&	2,210	1/8	L, U	T, Q, A, B	R	P	ULT
RBR75%22300#&	2,230	1/8	L, U	T, Q, A, B	R	P	ULT
RBR75%22600#&	2,260	1/8	L, U	T, Q, A, B	R	P	ULT
RBR75%22900#&	2,290	1/8	L, U	T, Q, A, B	R	P	ULT
RBR75%23200#&	2,320	1/8	L, U	T, Q, A, B	R	P	ULT
RBR75%23400#&	2,340	1/8	L, U	T, Q, A, B	R	P	ULT
RBR75%23700#&	2,370	1/8	L, U	T, Q, A, B	R	P	ULT
RBR75%24000#&	2,400	1/8	L, U	T, Q, A, B	R	P	ULT
RBR75%24300#&	2,430	1/8	L, U	T, Q, A, B	R	P	ULT
RBR75%24600#&	2,460	1/8	L, U	T, Q, A, B	R	P	ULT
RBR75%24900#&	2,490	1/8	L, U	T, Q, A, B	R	P	ULT
RBR75%25200#&	2,520	1/8	L, U	T, Q, A, B	R	P	ULT
RBR75%25500#&	2,550	1/8	L, U	T, Q, A, B	R	P	ULT
RBR75%25800#&	2,580	1/8	L, U	T, Q, A, B	R	P	ULT
RBR75%26100#&	2,610	1/8	L, U	T, Q, A, B	R	P	ULT
RBR75%26400#&	2,640	1/8	L, U	T, Q, A, B	R	P	ULT
RBR75%26700#&	2,670	1/8	L, U	T, Q, A, B	R	P	ULT
RBR75%27100#&	2,710	1/8	L, U	T, Q, A, B	R	P	ULT

RBR75%27400#&	2,740	1/8	L, U	T, Q, A, B	R	P	ULT
RBR75%27700#&	2,770	1/8	L, U	T, Q, A, B	R	P	ULT
RBR75%28000#&	2,800	1/8	L, U	T, Q, A, B	R	P	ULT
RBR75%28400#&	2,840	1/8	L, U	T, Q, A, B	R	P	ULT
RBR75%28700#&	2,870	1/8	L, U	T, Q, A, B	R	P	ULT
RBR75%29100#&	2,910	1/8	L, U	T, Q, A, B	R	P	ULT
RBR75%29400#&	2,940	1/8	L, U	T, Q, A, B	R	P	ULT
RBR75%29800#&	2,980	1/8	L, U	T, Q, A, B	R	P	ULT
RBR75%30100#&	3,010	1/8	L, U	T, Q, A, B	R	P	ULT
RBR75%30500#&	3,050	1/8	L, U	T, Q, A, B	R	P	ULT
RBR75%30900#&	3,090	1/8	L, U	T, Q, A, B	R	P	ULT
RBR75%31200#&	3,120	1/8	L, U	T, Q, A, B	R	P	ULT
RBR75%31600#&	3,160	1/8	L, U	T, Q, A, B	R	P	ULT
RBR75%32000#&	3,200	1/8	L, U	T, Q, A, B	R	P	ULT
RBR75%32400#&	3,240	1/8	L, U	T, Q, A, B	R	P	ULT
RBR75%32800#&	3,280	1/8	L, U	T, Q, A, B	R	P	ULT
RBR75%33200#&	3,320	1/8	L, U	T, Q, A, B	R	P	ULT
RBR75%33600#&	3,360	1/8	L, U	T, Q, A, B	R	P	ULT
RBR75%34000#&	3,400	1/8	L, U	T, Q, A, B	R	P	ULT
RBR75%34400#&	3,440	1/8	L, U	T, Q, A, B	R	P	ULT
RBR75%34800#&	3,480	1/8	L, U	T, Q, A, B	R	P	ULT
RBR75%35200#&	3,520	1/8	L, U	T, Q, A, B	R	P	ULT
RBR75%35700#&	3,570	1/8	L, U	T, Q, A, B	R	P	ULT
RBR75%36100#&	3,610	1/8	L, U	T, Q, A, B	R	P	ULT
RBR75%36500#&	3,650	1/8	L, U	T, Q, A, B	R	P	ULT
RBR75%37000#&	3,700	1/8	L, U	T, Q, A, B	R	P	ULT
RBR75%37400#&	3,740	1/8	L, U	T, Q, A, B	R	P	ULT
RBR75%37900#&	3,790	1/8	L, U	T, Q, A, B	R	P	ULT
RBR75%38300#&	3,830	1/8	L, U	T, Q, A, B	R	P	ULT
RBR75%38800#&	3,880	1/8	L, U	T, Q, A, B	R	P	ULT
RBR75%39200#&	3,920	1/8	L, U	T, Q, A, B	R	P	ULT
RBR75%39700#&	3,970	1/8	L, U	T, Q, A, B	R	P	ULT
RBR75%40200#&	4,020	1/8	L, U	T, Q, A, B	R	P	ULT
RBR75%40700#&	4,070	1/8	L, U	T, Q, A, B	R	P	ULT
RBR75%41200#&	4,120	1/8	L, U	T, Q, A, B	R	P	ULT
RBR75%41700#&	4,170	1/8	L, U	T, Q, A, B	R	P	ULT
RBR75%42200#&	4,220	1/8	L, U	T, Q, A, B	R	P	ULT
RBR75%42700#&	4,270	1/8	L, U	T, Q, A, B	R	P	ULT
RBR75%43200#&	4,320	1/8	L, U	T, Q, A, B	R	P	ULT
RBR75%43700#&	4,370	1/8	L, U	T, Q, A, B	R	P	ULT
RBR75%44200#&	4,420	1/8	L, U	T, Q, A, B	R	P	ULT
RBR75%44800#&	4,480	1/8	L, U	T, Q, A, B	R	P	ULT
RBR75%45300#&	4,530	1/8	L, U	T, Q, A, B	R	P	ULT
RBR75%45900#&	4,590	1/8	L, U	T, Q, A, B	R	P	ULT
RBR75%46400#&	4,640	1/8	L, U	T, Q, A, B	R	P	ULT
RBR75%47000#&	4,700	1/8	L, U	T, Q, A, B	R	P	ULT
RBR75%47500#&	4,750	1/8	L, U	T, Q, A, B	R	P	ULT

RBR75%48100#&	4,810	1/8	L, U	T, Q, A, B	R	P	ULT
RBR75%48700#&	4,870	1/8	L, U	T, Q, A, B	R	P	ULT
RBR75%49300#&	4,930	1/8	L, U	T, Q, A, B	R	P	ULT
RBR75%49900#&	4,990	1/8	L, U	T, Q, A, B	R	P	ULT
RBR75%50500#&	5,050	1/8	L, U	T, Q, A, B	R	P	ULT
RBR75%51100#&	5,110	1/8	L, U	T, Q, A, B	R	P	ULT
RBR75%51700#&	5,170	1/8	L, U	T, Q, A, B	R	P	ULT
RBR75%52300#&	5,230	1/8	L, U	T, Q, A, B	R	P	ULT
RBR75%53000#&	5,300	1/8	L, U	T, Q, A, B	R	P	ULT
RBR75%53600#&	5,360	1/8	L, U	T, Q, A, B	R	P	ULT
RBR75%54200#&	5,420	1/8	L, U	T, Q, A, B	R	P	ULT
RBR75%54900#&	5,490	1/8	L, U	T, Q, A, B	R	P	ULT
RBR75%55600#&	5,560	1/8	L, U	T, Q, A, B	R	P	ULT
RBR75%56200#&	5,620	1/8	L, U	T, Q, A, B	R	P	ULT
RBR75%56900#&	5,690	1/8	L, U	T, Q, A, B	R	P	ULT
RBR75%57600#&	5,760	1/8	L, U	T, Q, A, B	R	P	ULT
RBR75%58300#&	5,830	1/8	L, U	T, Q, A, B	R	P	ULT
RBR75%59000#&	5,900	1/8	L, U	T, Q, A, B	R	P	ULT
RBR75%59700#&	5,970	1/8	L, U	T, Q, A, B	R	P	ULT
RBR75%60400#&	6,040	1/8	L, U	T, Q, A, B	R	P	ULT
RBR75%61200#&	6,120	1/8	L, U	T, Q, A, B	R	P	ULT
RBR75%61900#&	6,190	1/8	L, U	T, Q, A, B	R	P	ULT
RBR75%62600#&	6,260	1/8	L, U	T, Q, A, B	R	P	ULT
RBR75%63400#&	6,340	1/8	L, U	T, Q, A, B	R	P	ULT
RBR75%64200#&	6,420	1/8	L, U	T, Q, A, B	R	P	ULT
RBR75%64900#&	6,490	1/8	L, U	T, Q, A, B	R	P	ULT
RBR75%65700#&	6,570	1/8	L, U	T, Q, A, B	R	P	ULT
RBR75%66500#&	6,650	1/8	L, U	T, Q, A, B	R	P	ULT
RBR75%67300#&	6,730	1/8	L, U	T, Q, A, B	R	P	ULT
RBR75%68100#&	6,810	1/8	L, U	T, Q, A, B	R	P	ULT
RBR75%69000#&	6,900	1/8	L, U	T, Q, A, B	R	P	ULT
RBR75%69800#&	6,980	1/8	L, U	T, Q, A, B	R	P	ULT
RBR75%70600#&	7,060	1/8	L, U	T, Q, A, B	R	P	ULT
RBR75%71500#&	7,150	1/8	L, U	T, Q, A, B	R	P	ULT
RBR75%72300#&	7,230	1/8	L, U	T, Q, A, B	R	P	ULT
RBR75%73200#&	7,320	1/8	L, U	T, Q, A, B	R	P	ULT
RBR75%74100#&	7,410	1/8	L, U	T, Q, A, B	R	P	ULT
RBR75%75000#&	7,500	1/8	L, U	T, Q, A, B	R	P	ULT
RBR75%75900#&	7,590	1/8	L, U	T, Q, A, B	R	P	ULT
RBR75%76800#&	7,680	1/8	L, U	T, Q, A, B	R	P	ULT
RBR75%77700#&	7,770	1/8	L, U	T, Q, A, B	R	P	ULT
RBR75%78700#&	7,870	1/8	L, U	T, Q, A, B	R	P	ULT
RBR75%79600#&	7,960	1/8	L, U	T, Q, A, B	R	P	ULT
RBR75%80600#&	8,060	1/8	L, U	T, Q, A, B	R	P	ULT
RBR75%81600#&	8,160	1/8	L, U	T, Q, A, B	R	P	ULT
RBR75%82500#&	8,250	1/8	L, U	T, Q, A, B	R	P	ULT
RBR75%83500#&	8,350	1/8	L, U	T, Q, A, B	R	P	ULT

RBR75%84500#&	8,450	1/8	L, U	T, Q, A, B	R	P	ULT
RBR75%85600#&	8,560	1/8	L, U	T, Q, A, B	R	P	ULT
RBR75%86600#&	8,660	1/8	L, U	T, Q, A, B	R	P	ULT
RBR75%87600#&	8,760	1/8	L, U	T, Q, A, B	R	P	ULT
RBR75%88700#&	8,870	1/8	L, U	T, Q, A, B	R	P	ULT
RBR75%89800#&	8,980	1/8	L, U	T, Q, A, B	R	P	ULT
RBR75%90900#&	9,090	1/8	L, U	T, Q, A, B	R	P	ULT
RBR75%92000#&	9,190	1/8	L, U	T, Q, A, B	R	P	ULT
RBR75%93100#&	9,310	1/8	L, U	T, Q, A, B	R	P	ULT
RBR75%94200#&	9,420	1/8	L, U	T, Q, A, B	R	P	ULT
RBR75%95300#&	9,530	1/8	L, U	T, Q, A, B	R	P	ULT
RBR75%96500#&	9,650	1/8	L, U	T, Q, A, B	R	P	ULT
RBR75%97600#&	9,760	1/8	L, U	T, Q, A, B	R	P	ULT
RBR75%98800#&	9,880	1/8	L, U	T, Q, A, B	R	P	ULT
RBR75%10001#&	10,000	1/8	L, U	T, Q, A, B	R	P	ULT
RBR75%10101#&	10,100	1/8	L, U	T, Q, A, B	R	P	ULT
RBR75%10201#&	10,200	1/8	L, U	T, Q, A, B	R	P	ULT
RBR75%10401#&	10,400	1/8	L, U	T, Q, A, B	R	P	ULT
RBR75%10501#&	10,500	1/8	L, U	T, Q, A, B	R	P	ULT
RBR75%10601#&	10,600	1/8	L, U	T, Q, A, B	R	P	ULT
RBR75%10701#&	10,700	1/8	L, U	T, Q, A, B	R	P	ULT
RBR75%10901#&	10,900	1/8	L, U	T, Q, A, B	R	P	ULT
RBR75%11001#&	11,000	1/8	L, U	T, Q, A, B	R	P	ULT
RBR75%11101#&	11,100	1/8	L, U	T, Q, A, B	R	P	ULT
RBR75%11301#&	11,300	1/8	L, U	T, Q, A, B	R	P	ULT
RBR75%11401#&	11,400	1/8	L, U	T, Q, A, B	R	P	ULT
RBR75%11501#&	11,500	1/8	L, U	T, Q, A, B	R	P	ULT
RBR75%11701#&	11,700	1/8	L, U	T, Q, A, B	R	P	ULT
RBR75%11801#&	11,800	1/8	L, U	T, Q, A, B	R	P	ULT
RBR75%12001#&	12,000	1/8	L, U	T, Q, A, B	R	P	ULT
RBR75%12101#&	12,100	1/8	L, U	T, Q, A, B	R	P	ULT
RBR75%12301#&	12,300	1/8	L, U	T, Q, A, B	R	P	ULT
RBR75%12401#&	12,400	1/8	L, U	T, Q, A, B	R	P	ULT
RBR75%12601#&	12,600	1/8	L, U	T, Q, A, B	R	P	ULT
RBR75%12701#&	12,700	1/8	L, U	T, Q, A, B	R	P	ULT
RBR75%12901#&	12,900	1/8	L, U	T, Q, A, B	R	P	ULT
RBR75%13001#&	13,000	1/8	L, U	T, Q, A, B	R	P	ULT
RBR75%13201#&	13,200	1/8	L, U	T, Q, A, B	R	P	ULT
RBR75%13301#&	13,300	1/8	L, U	T, Q, A, B	R	P	ULT
RBR75%13501#&	13,500	1/8	L, U	T, Q, A, B	R	P	ULT
RBR75%13701#&	13,700	1/8	L, U	T, Q, A, B	R	P	ULT
RBR75%13801#&	13,800	1/8	L, U	T, Q, A, B	R	P	ULT
RBR75%14001#&	14,000	1/8	L, U	T, Q, A, B	R	P	ULT
RBR75%14201#&	14,200	1/8	L, U	T, Q, A, B	R	P	ULT
RBR75%14301#&	14,300	1/8	L, U	T, Q, A, B	R	P	ULT
RBR75%14501#&	14,500	1/8	L, U	T, Q, A, B	R	P	ULT
RBR75%14701#&	14,700	1/8	L, U	T, Q, A, B	R	P	ULT

RBR75%14901#&	14,900	1/8	L, U	T, Q, A, B	R	P	ULT
RBR75%15001#&	15,000	1/8	L, U	T, Q, A, B	R	P	ULT
RBR75%15201#&	15,200	1/8	L, U	T, Q, A, B	R	P	ULT
RBR75%15401#&	15,400	1/8	L, U	T, Q, A, B	R	P	ULT
RBR75%15601#&	15,600	1/8	L, U	T, Q, A, B	R	P	ULT
RBR75%15801#&	15,800	1/8	L, U	T, Q, A, B	R	P	ULT
RBR75%16001#&	16,000	1/8	L, U	T, Q, A, B	R	P	ULT
RBR75%16201#&	16,200	1/8	L, U	T, Q, A, B	R	P	ULT
RBR75%16401#&	16,400	1/8	L, U	T, Q, A, B	R	P	ULT
RBR75%16501#&	16,500	1/8	L, U	T, Q, A, B	R	P	ULT
RBR75%16701#&	16,700	1/8	L, U	T, Q, A, B	R	P	ULT
RBR75%16901#&	16,900	1/8	L, U	T, Q, A, B	R	P	ULT
RBR75%17201#&	17,200	1/8	L, U	T, Q, A, B	R	P	ULT
RBR75%17401#&	17,400	1/8	L, U	T, Q, A, B	R	P	ULT
RBR75%17601#&	17,600	1/8	L, U	T, Q, A, B	R	P	ULT
RBR75%17801#&	17,800	1/8	L, U	T, Q, A, B	R	P	ULT
RBR75%18001#&	18,000	1/8	L, U	T, Q, A, B	R	P	ULT
RBR75%18201#&	18,200	1/8	L, U	T, Q, A, B	R	P	ULT
RBR75%18401#&	18,400	1/8	L, U	T, Q, A, B	R	P	ULT
RBR75%18701#&	18,700	1/8	L, U	T, Q, A, B	R	P	ULT
RBR75%18901#&	18,900	1/8	L, U	T, Q, A, B	R	P	ULT
RBR75%19101#&	19,100	1/8	L, U	T, Q, A, B	R	P	ULT
RBR75%19301#&	19,300	1/8	L, U	T, Q, A, B	R	P	ULT
RBR75%19601#&	19,600	1/8	L, U	T, Q, A, B	R	P	ULT
RBR75%19801#&	19,800	1/8	L, U	T, Q, A, B	R	P	ULT
RBR75%20001#&	20,000	1/8	L, U	T, Q, A, B	R	P	ULT
RBR75%20301#&	20,300	1/8	L, U	T, Q, A, B	R	P	ULT
RBR75%20501#&	20,500	1/8	L, U	T, Q, A, B	R	P	ULT
RBR75%20801#&	20,800	1/8	L, U	T, Q, A, B	R	P	ULT
RBR75%21001#&	21,000	1/8	L, U	T, Q, A, B	R	P	ULT
RBR75%21301#&	21,300	1/8	L, U	T, Q, A, B	R	P	ULT
RBR75%21501#&	21,500	1/8	L, U	T, Q, A, B	R	P	ULT
RBR75%21801#&	21,800	1/8	L, U	T, Q, A, B	R	P	ULT
RBR75%22101#&	22,100	1/8	L, U	T, Q, A, B	R	P	ULT
RBR75%22301#&	22,300	1/8	L, U	T, Q, A, B	R	P	ULT
RBR75%22601#&	22,600	1/8	L, U	T, Q, A, B	R	P	ULT
RBR75%22901#&	22,900	1/8	L, U	T, Q, A, B	R	P	ULT
RBR75%23201#&	23,200	1/8	L, U	T, Q, A, B	R	P	ULT
RBR75%23401#&	23,400	1/8	L, U	T, Q, A, B	R	P	ULT
RBR75%23701#&	23,700	1/8	L, U	T, Q, A, B	R	P	ULT
RBR75%24001#&	24,000	1/8	L, U	T, Q, A, B	R	P	ULT
RBR75%24301#&	24,300	1/8	L, U	T, Q, A, B	R	P	ULT
RBR75%24601#&	24,600	1/8	L, U	T, Q, A, B	R	P	ULT
RBR75%24901#&	24,900	1/8	L, U	T, Q, A, B	R	P	ULT
RBR75%25201#&	25,200	1/8	L, U	T, Q, A, B	R	P	ULT
RBR75%25501#&	25,500	1/8	L, U	T, Q, A, B	R	P	ULT
RBR75%25801#&	25,800	1/8	L, U	T, Q, A, B	R	P	ULT

RBR75%26101#&	26,100	1/8	L, U	T, Q, A, B	R	P	ULT
RBR75%26401#&	26,400	1/8	L, U	T, Q, A, B	R	P	ULT
RBR75%26701#&	26,700	1/8	L, U	T, Q, A, B	R	P	ULT
RBR75%27101#&	27,100	1/8	L, U	T, Q, A, B	R	P	ULT
RBR75%27401#&	27,400	1/8	L, U	T, Q, A, B	R	P	ULT
RBR75%27701#&	27,700	1/8	L, U	T, Q, A, B	R	P	ULT
RBR75%28001#&	28,000	1/8	L, U	T, Q, A, B	R	P	ULT
RBR75%28401#&	28,400	1/8	L, U	T, Q, A, B	R	P	ULT
RBR75%28701#&	28,700	1/8	L, U	T, Q, A, B	R	P	ULT
RBR75%29101#&	29,100	1/8	L, U	T, Q, A, B	R	P	ULT
RBR75%29401#&	29,400	1/8	L, U	T, Q, A, B	R	P	ULT
RBR75%29801#&	29,800	1/8	L, U	T, Q, A, B	R	P	ULT
RBR75%30101#&	30,100	1/8	L, U	T, Q, A, B	R	P	ULT
RBR75%30501#&	30,500	1/8	L, U	T, Q, A, B	R	P	ULT
RBR75%30901#&	30,900	1/8	L, U	T, Q, A, B	R	P	ULT
RBR75%31201#&	31,200	1/8	L, U	T, Q, A, B	R	P	ULT
RBR75%31601#&	31,600	1/8	L, U	T, Q, A, B	R	P	ULT
RBR75%32001#&	32,000	1/8	L, U	T, Q, A, B	R	P	ULT
RBR75%32401#&	32,400	1/8	L, U	T, Q, A, B	R	P	ULT
RBR75%32801#&	32,800	1/8	L, U	T, Q, A, B		P	ULT
RBR75%33201#&	33,200	1/8	L, U	T, Q, A, B		P	ULT
RBR75%33601#&	33,600	1/8	L, U	T, Q, A, B		P	ULT
RBR75%34001#&	34,000	1/8	L, U	T, Q, A, B		P	ULT
RBR75%34401#&	34,400	1/8	L, U	T, Q, A, B		P	ULT
RBR75%34801#&	34,800	1/8	L, U	T, Q, A, B		P	ULT
RBR75%35201#&	35,200	1/8	L, U	T, Q, A, B		P	ULT
RBR75%35701#&	35,700	1/8	L, U	T, Q, A, B		P	ULT
RBR75%36101#&	36,100	1/8	L, U	T, Q, A, B		P	ULT
RBR75%36501#&	36,500	1/8	L, U	T, Q, A, B		P	ULT
RBR75%37001#&	37,000	1/8	L, U	T, Q, A, B		P	ULT
RBR75%37401#&	37,400	1/8	L, U	T, Q, A, B		P	ULT
RBR75%37901#&	37,900	1/8	L, U	T, Q, A, B		P	ULT
RBR75%38301#&	38,300	1/8	L, U	T, Q, A, B		P	ULT
RBR75%38801#&	38,800	1/8	L, U	T, Q, A, B		P	ULT
RBR75%39201#&	39,200	1/8	L, U	T, Q, A, B		P	ULT
RBR75%39701#&	39,700	1/8	L, U	T, Q, A, B		P	ULT
RBR75%40201#&	40,200	1/8	L, U	T, Q, A, B		P	ULT
RBR75%40701#&	40,700	1/8	L, U	T, Q, A, B		P	ULT
RBR75%41201#&	41,200	1/8	L, U	T, Q, A, B		P	ULT
RBR75%41701#&	41,700	1/8	L, U	T, Q, A, B		P	ULT
RBR75%42201#&	42,200	1/8	L, U	T, Q, A, B		P	ULT
RBR75%42701#&	42,700	1/8	L, U	T, Q, A, B		P	ULT
RBR75%43201#&	43,200	1/8	L, U	T, Q, A, B		P	ULT
RBR75%43701#&	43,700	1/8	L, U	T, Q, A, B		P	ULT
RBR75%44201#&	44,200	1/8	L, U	T, Q, A, B		P	ULT
RBR75%44801#&	44,800	1/8	L, U	T, Q, A, B		P	ULT
RBR75%45301#&	45,300	1/8	L, U	T, Q, A, B		P	ULT

RBR75%45901#&	45,900	1/8	L, U	T, Q, A, B		P	ULT
RBR75%46401#&	46,400	1/8	L, U	T, Q, A, B		P	ULT
RBR75%47001#&	47,000	1/8	L, U	T, Q, A, B		P	ULT
RBR75%47501#&	47,500	1/8	L, U	T, Q, A, B		P	ULT
RBR75%48101#&	48,100	1/8	L, U	T, Q, A, B		P	ULT
RBR75%48701#&	48,700	1/8	L, U	T, Q, A, B		P	ULT
RBR75%49301#&	49,300	1/8	L, U	T, Q, A, B		P	ULT
RBR75%49901#&	49,900	1/8	L, U	T, Q, A, B		P	ULT
RBR75%50501#&	50,500	1/8	L, U	T, Q, A, B		P	ULT
RBR75%51101#&	51,100	1/8	L, U	T, Q, A, B		P	ULT
RBR75%51701#&	51,700	1/8	L, U	T, Q, A, B		P	ULT
RBR75%52301#&	52,300	1/8	L, U	T, Q, A, B		P	ULT
RBR75%53001#&	53,000	1/8	L, U	T, Q, A, B		P	ULT
RBR75%53601#&	53,600	1/8	L, U	T, Q, A, B		P	ULT
RBR75%54201#&	54,200	1/8	L, U	T, Q, A, B		P	ULT
RBR75%54901#&	54,900	1/8	L, U	T, Q, A, B		P	ULT
RBR75%55601#&	55,600	1/8	L, U	T, Q, A, B		P	ULT
RBR75%56201#&	56,200	1/8	L, U	T, Q, A, B		P	ULT
RBR75%56901#&	56,900	1/8	L, U	T, Q, A, B		P	ULT
RBR75%57601#&	57,600	1/8	L, U	T, Q, A, B		P	ULT
RBR75%58301#&	58,300	1/8	L, U	T, Q, A, B		P	ULT
RBR75%59001#&	59,000	1/8	L, U	T, Q, A, B		P	ULT
RBR75%59701#&	59,700	1/8	L, U	T, Q, A, B		P	ULT
RBR75%60401#&	60,400	1/8	L, U	T, Q, A, B		P	ULT
RBR75%61201#&	61,200	1/8	L, U	T, Q, A, B		P	ULT
RBR75%61901#&	61,900	1/8	L, U	T, Q, A, B		P	ULT
RBR75%62601#&	62,600	1/8	L, U	T, Q, A, B		P	ULT
RBR75%63401#&	63,400	1/8	L, U	T, Q, A, B		P	ULT
RBR75%64201#&	64,200	1/8	L, U	T, Q, A, B		P	ULT
RBR75%64901#&	64,900	1/8	L, U	T, Q, A, B		P	ULT
RBR75%65701#&	65,700	1/8	L, U	T, Q, A, B		P	ULT
RBR75%66501#&	66,500	1/8	L, U	T, Q, A, B		P	ULT
RBR75%67301#&	67,300	1/8	L, U	T, Q, A, B		P	ULT
RBR75%68101#&	68,100	1/8	L, U	T, Q, A, B		P	ULT
RBR75%69001#&	69,000	1/8	L, U	T, Q, A, B		P	ULT
RBR75%69801#&	69,800	1/8	L, U	T, Q, A, B		P	ULT
RBR75%70601#&	70,600	1/8	L, U	T, Q, A, B		P	ULT
RBR75%71501#&	71,500	1/8	L, U	T, Q, A, B		P	ULT
RBR75%72301#&	72,300	1/8	L, U	T, Q, A, B		P	ULT
RBR75%73201#&	73,200	1/8	L, U	T, Q, A, B		P	ULT
RBR75%74101#&	74,100	1/8	L, U	T, Q, A, B		P	ULT
RBR75%75001#&	75,000	1/8	L, U	T, Q, A, B		P	ULT
RBR75%75901#&	75,900	1/8	L, U	T, Q, A, B		P	ULT
RBR75%76802#&	76,800	1/8	L, U	T, Q, A, B		P	ULT
RBR75%77702#&	77,700	1/8	L, U	T, Q, A, B		P	ULT
RBR75%78702#&	78,700	1/8	L, U	T, Q, A, B		P	ULT
RBR75%79602#&	79,600	1/8	L, U	T, Q, A, B		P	ULT

RBR75%80602#&	80,600	1/8	L, U	T, Q, A, B		P	ULT
RBR75%81602#&	81,600	1/8	L, U	T, Q, A, B		P	ULT
RBR75%82502#&	82,500	1/8	L, U	T, Q, A, B		P	ULT
RBR75%83502#&	83,500	1/8	L, U	T, Q, A, B		P	ULT
RBR75%84502#&	84,500	1/8	L, U	T, Q, A, B		P	ULT
RBR75%85602#&	85,600	1/8	L, U	T, Q, A, B		P	ULT
RBR75%86602#&	86,600	1/8	L, U	T, Q, A, B		P	ULT
RBR75%87602#&	87,600	1/8	L, U	T, Q, A, B		P	ULT
RBR75%88702#&	88,700	1/8	L, U	T, Q, A, B		P	ULT
RBR75%89802#&	89,800	1/8	L, U	T, Q, A, B		P	ULT
RBR75%90902#&	90,900	1/8	L, U	T, Q, A, B		P	ULT
RBR75%92002#&	92,000	1/8	L, U	T, Q, A, B		P	ULT
RBR75%93102#&	93,100	1/8	L, U	T, Q, A, B		P	ULT
RBR75%94202#&	94,200	1/8	L, U	T, Q, A, B		P	ULT
RBR75%95302#&	95,300	1/8	L, U	T, Q, A, B		P	ULT
RBR75%96502#&	96,500	1/8	L, U	T, Q, A, B		P	ULT
RBR75%97602#&	97,600	1/8	L, U	T, Q, A, B		P	ULT
RBR75%98802#&	98,800	1/8	L, U	T, Q, A, B		P	ULT
RBR75%10002#&	100,000	1/8	L, U	T, Q, A, B		P	ULT
RBR75%10102#&	101,000	1/8	L, U	T, Q, A, B		P	ULT
RBR75%10202#&	102,000	1/8	L, U	T, Q, A, B		P	ULT
RBR75%10402#&	104,000	1/8	L, U	T, Q, A, B		P	ULT
RBR75%10502#&	105,000	1/8	L, U	T, Q, A, B		P	ULT
RBR75%10602#&	106,000	1/8	L, U	T, Q, A, B		P	ULT
RBR75%10702#&	107,000	1/8	L, U	T, Q, A, B		P	ULT
RBR75%10902#&	109,000	1/8	L, U	T, Q, A, B		P	ULT
RBR75%11002#&	110,000	1/8	L, U	T, Q, A, B		P	ULT
RBR75%11102#&	111,000	1/8	L, U	T, Q, A, B		P	ULT
RBR75%11302#&	113,000	1/8	L, U	T, Q, A, B		P	ULT
RBR75%11402#&	114,000	1/8	L, U	T, Q, A, B		P	ULT
RBR75%11502#&	115,000	1/8	L, U	T, Q, A, B		P	ULT
RBR75%11702#&	117,000	1/8	L, U	T, Q, A, B		P	ULT
RBR75%11802#&	118,000	1/8	L, U	T, Q, A, B		P	ULT
RBR75%12002#&	120,000	1/8	L, U	T, Q, A, B		P	ULT
RBR75%12102#&	121,000	1/8	L, U	T, Q, A, B		P	ULT
RBR75%12302#&	123,000	1/8	L, U	T, Q, A, B		P	ULT
RBR75%12402#&	124,000	1/8	L, U	T, Q, A, B		P	ULT
RBR75%12602#&	126,000	1/8	L, U	T, Q, A, B		P	ULT
RBR75%12702#&	127,000	1/8	L, U	T, Q, A, B		P	ULT
RBR75%12902#&	129,000	1/8	L, U	T, Q, A, B		P	ULT
RBR75%13002#&	130,000	1/8	L, U	T, Q, A, B		P	ULT
RBR75%13202#&	132,000	1/8	L, U	T, Q, A, B		P	ULT
RBR75%13302#&	133,000	1/8	L, U	T, Q, A, B		P	ULT
RBR75%13502#&	135,000	1/8	L, U	T, Q, A, B		P	ULT
RBR75%13702#&	137,000	1/8	L, U	T, Q, A, B		P	ULT
RBR75%13802#&	138,000	1/8	L, U	T, Q, A, B		P	ULT
RBR75%14002#&	140,000	1/8	L, U	T, Q, A, B		P	ULT

RBR75%14202#&	142,000	1/8	L, U	T, Q, A, B		P	ULT
RBR75%14302#&	143,000	1/8	L, U	T, Q, A, B		P	ULT
RBR75%14502#&	145,000	1/8	L, U	T, Q, A, B		P	ULT
RBR75%14702#&	147,000	1/8	L, U	T, Q, A, B		P	ULT
RBR75%14902#&	149,000	1/8	L, U	T, Q, A, B		P	ULT
RBR75%15002#&	150,000	1/8	L, U	T, Q, A, B		P	ULT

RBR75 RESISTORS DECADE BREAKDOWN

Click on the link below to see the associated parts selection listing:

Resistance Range
10.00 Ohms through 98.80 Ohms
100.0 Ohms through 988.0 Ohms
1,000 Ohms through 9,880 Ohms
10,000 Ohms through 98,800 Ohms
100,000 Ohms through 150,000 Ohms

RBR75 Wirewound Resistors: 10.00 Ohms through 98.80 Ohms

	Resistance	Power	Terminal	Resistance	Level 1	Level 2	
Part Number	Value (Ohms)	Rating (W)	Characteristic (#)	Tolerance (%)	(FRL)(&)	(FRL)(&)	Manufacturer
RBR75#10R00%&	10.00	1/8	L, U	T, Q, A, B	R	P	NO SOURCE
RBR75#10R10%&	10.10	1/8	L, U	T, Q, A, B	R	P	NO SOURCE
RBR75#10R20%&	10.20	1/8	L, U	T, Q, A, B	R	P	NO SOURCE
RBR75#10R40%&	10.40	1/8	L, U	T, Q, A, B	R	P	NO SOURCE
RBR75#10R50%&	10.50	1/8	L, U	T, Q, A, B	R	P	NO SOURCE
RBR75#10R60%&	10.60	1/8	L, U	T, Q, A, B	R	P	NO SOURCE
RBR75#10R70%&	10.70	1/8	L, U	T, Q, A, B	R	P	NO SOURCE
RBR75#10R90%&	10.90	1/8	L, U	T, Q, A, B	R	P	NO SOURCE
RBR75#11R00%&	11.00	1/8	L, U	T, Q, A, B	R	P	NO SOURCE
RBR75#11R10%&	11.10	1/8	L, U	T, Q, A, B	R	P	NO SOURCE
RBR75#11R30%&	11.30	1/8	L, U	T, Q, A, B	R	P	NO SOURCE
RBR75#11R40%&	11.40	1/8	L, U	T, Q, A, B	R	P	NO SOURCE
RBR75#11R50%&	11.50	1/8	L, U	T, Q, A, B	R	P	NO SOURCE
RBR75#11R70%&	11.70	1/8	L, U	T, Q, A, B	R	P	NO SOURCE
	Resistance	Power	Terminal	Resistance	Level 1	Level 2	
Part Number	Value (Ohms)	Rating (W)	Characteristic (#)	Tolerance (%)	(FRL)(&)	(FRL)(&)	Manufacturer
RBR75#11R80%&	11.80	1/8	L, U	T, Q, A, B	R	P	NO SOURCE
RBR75#12R00%&	12.00	1/8	L, U	T, Q, A, B	R	P	NO SOURCE
RBR75#12R10%&	12.10	1/8	L, U	T, Q, A, B	R	P	NO SOURCE
RBR75#12R30%&	12.30	1/8	L, U	T, Q, A, B	R	P	NO SOURCE
RBR75#12R40%&	12.40	1/8	L, U	T, Q, A, B	R	P	NO SOURCE
RBR75#12R60%&	12.60	1/8	L, U	T, Q, A, B	R	P	NO SOURCE
RBR75#12R70%&	12.70	1/8	L, U	T, Q, A, B	R	P	NO SOURCE

RBR75#12R90%&	12.90	1/8	L, U	T, Q, A, B	R	P	NO SOURCE
RBR75#13R00%&	13.00	1/8	L, U	T, Q, A, B	R	P	NO SOURCE
RBR75#13R20%&	13.20	1/8	L, U	T, Q, A, B	R	P	NO SOURCE
RBR75#13R30%&	13.30	1/8	L, U	T, Q, A, B	R	P	NO SOURCE
RBR75#13R50%&	13.50	1/8	L, U	T, Q, A, B	R	P	NO SOURCE
RBR75#13R70%&	13.70	1/8	L, U	T, Q, A, B	R	P	NO SOURCE
RBR75#13R80%&	13.80	1/8	L, U	T, Q, A, B	R	P	NO SOURCE
	Resistance	Power	Terminal	Resistance	Level 1	Level 2	
Part Number	Value (Ohms)	Rating (W)	Characteristic (#)	Tolerance (%)	(FRL)(&)	(FRL)(&)	Manufacturer
RBR75#14R00%&	14.00	1/8	L, U	T, Q, A, B	R	P	NO SOURCE
RBR75#14R20%&	14.20	1/8	L, U	T, Q, A, B	R	P	NO SOURCE
RBR75#14R30%&	14.30	1/8	L, U	T, Q, A, B	R	P	NO SOURCE
RBR75#14R50%&	14.50	1/8	L, U	T, Q, A, B	R	P	NO SOURCE
RBR75#14R70%&	14.70	1/8	L, U	T, Q, A, B	R	P	NO SOURCE
RBR75#14R90%&	14.90	1/8	L, U	T, Q, A, B	R	P	NO SOURCE
RBR75#15R00%&	15.00	1/8	L, U	T, Q, A, B	R	P	NO SOURCE
RBR75#15R20%&	15.20	1/8	L, U	T, Q, A, B	R	P	NO SOURCE
RBR75#15R40%&	15.40	1/8	L, U	T, Q, A, B	R	P	NO SOURCE
RBR75#15R60%&	15.60	1/8	L, U	T, Q, A, B	R	P	NO SOURCE
RBR75#15R80%&	15.80	1/8	L, U	T, Q, A, B	R	P	NO SOURCE
RBR75#16R00%&	16.00	1/8	L, U	T, Q, A, B	R	P	NO SOURCE
RBR75#16R20%&	16.20	1/8	L, U	T, Q, A, B	R	P	NO SOURCE
RBR75#16R40%&	16.40	1/8	L, U	T, Q, A, B	R	P	NO SOURCE
	Resistance	Power	Terminal	Resistance	Level 1	Level 2	
Part Number	Value (Ohms)	Rating (W)	Characteristic (#)	Tolerance (%)	(FRL)(&)	(FRL)(&)	Manufacturer
RBR75#16R50%&	16.50	1/8	L, U	T, Q, A, B	R	P	NO SOURCE
RBR75#16R70%&	16.70	1/8	L, U	T, Q, A, B	R	P	NO SOURCE
RBR75#16R90%&	16.90	1/8	L, U	T, Q, A, B	R	P	NO SOURCE
RBR75#17R20%&	17.20	1/8	L, U	T, Q, A, B	R	P	NO SOURCE
RBR75#17R40%&	17.40	1/8	L, U	T, Q, A, B	R	P	NO SOURCE
RBR75#17R60%&	17.60	1/8	L, U	T, Q, A, B	R	P	NO SOURCE
RBR75#17R80%&	17.80	1/8	L, U	T, Q, A, B	R	P	NO SOURCE
RBR75#18R00%&	18.00	1/8	L, U	T, Q, A, B	R	P	NO SOURCE
RBR75#18R20%&	18.20	1/8	L, U	T, Q, A, B	R	P	NO SOURCE
RBR75#18R40%&	18.40	1/8	L, U	T, Q, A, B	R	P	NO SOURCE
RBR75#18R70%&	18.70	1/8	L, U	T, Q, A, B	R	P	NO SOURCE
RBR75#18R90%&	18.90	1/8	L, U	T, Q, A, B	R	P	NO SOURCE
RBR75#19R10%&	19.10	1/8	L, U	T, Q, A, B	R	P	NO SOURCE
RBR75#19R30%&	19.30	1/8	L, U	T, Q, A, B	R	P	NO SOURCE
	Resistance	Power	Terminal	Resistance	Level 1	Level 2	
Part Number	Value (Ohms)	Rating (W)	Characteristic (#)	Tolerance (%)	(FRL)(&)	(FRL)(&)	Manufacturer
RBR75#19R60%&	19.60	1/8	L, U	T, Q, A, B	R	P	NO SOURCE
RBR75#19R80%&	19.80	1/8	L, U	T, Q, A, B	R	P	NO SOURCE
RBR75#20R00%&	20.00	1/8	L, U	T, Q, A, B	R	P	NO SOURCE
RBR75#20R30%&	20.30	1/8	L, U	T, Q, A, B	R	P	NO SOURCE
RBR75#20R50%&	20.50	1/8	L, U	T, Q, A, B	R	P	NO SOURCE
RBR75#20R80%&	20.80	1/8	L, U	T, Q, A, B	R	P	NO SOURCE

RBR75#21R00%&	21.00	1/8	L, U	T, Q, A, B	R	P	NO SOURCE
RBR75#21R30%&	21.30	1/8	L, U	T, Q, A, B	R	P	NO SOURCE
RBR75#21R50%&	21.50	1/8	L, U	T, Q, A, B	R	P	NO SOURCE
RBR75#21R80%&	21.80	1/8	L, U	T, Q, A, B	R	P	NO SOURCE
RBR75#22R10%&	22.10	1/8	L, U	T, Q, A, B	R	P	NO SOURCE
RBR75#22R30%&	22.30	1/8	L, U	T, Q, A, B	R	P	NO SOURCE
RBR75#22R60%&	22.60	1/8	L, U	T, Q, A, B	R	P	NO SOURCE
RBR75#22R90%&	22.90	1/8	L, U	T, Q, A, B	R	P	NO SOURCE
	Resistance	Power	Terminal	Resistance	Level 1	Level 2	
Part Number	Value (Ohms)	Rating (W)	Characteristic (#)	Tolerance (%)	(FRL)(&)	(FRL)(&)	Manufacturer
RBR75#23R20%&	23.20	1/8	L, U	T, Q, A, B	R	P	NO SOURCE
RBR75#23R40%&	23.40	1/8	L, U	T, Q, A, B	R	P	NO SOURCE
RBR75#23R70%&	23.70	1/8	L, U	T, Q, A, B	R	P	NO SOURCE
RBR75#24R00%&	24.00	1/8	L, U	T, Q, A, B	R	P	NO SOURCE
RBR75#24R30%&	24.30	1/8	L, U	T, Q, A, B	R	P	NO SOURCE
RBR75#24R60%&	24.60	1/8	L, U	T, Q, A, B	R	P	NO SOURCE
RBR75#24R90%&	24.90	1/8	L, U	T, Q, A, B	R	P	NO SOURCE
RBR75#25R20%&	25.20	1/8	L, U	T, Q, A, B	R	P	NO SOURCE
RBR75#25R50%&	25.50	1/8	L, U	T, Q, A, B	R	P	NO SOURCE
RBR75#25R80%&	25.80	1/8	L, U	T, Q, A, B	R	P	NO SOURCE
RBR75#26R10%&	26.10	1/8	L, U	T, Q, A, B	R	P	NO SOURCE
RBR75#26R40%&	26.40	1/8	L, U	T, Q, A, B	R	P	NO SOURCE
RBR75#26R70%&	26.70	1/8	L, U	T, Q, A, B	R	P	NO SOURCE
RBR75#27R10%&	27.10	1/8	L, U	T, Q, A, B	R	P	NO SOURCE
	Resistance	Power	Terminal	Resistance	Level 1	Level 2	
Part Number	Value (Ohms)	Rating (W)	Characteristic (#)	Tolerance (%)	(FRL)(&)	(FRL)(&)	Manufacturer
RBR75#27R40%&	27.40	1/8	L, U	T, Q, A, B	R	P	NO SOURCE
RBR75#27R70%&	27.70	1/8	L, U	T, Q, A, B	R	P	NO SOURCE
RBR75#28R00%&	28.00	1/8	L, U	T, Q, A, B	R	P	NO SOURCE
RBR75#28R40%&	28.40	1/8	L, U	T, Q, A, B	R	P	NO SOURCE
RBR75#28R70%&	28.70	1/8	L, U	T, Q, A, B	R	P	NO SOURCE
RBR75#29R10%&	29.10	1/8	L, U	T, Q, A, B	R	P	NO SOURCE
RBR75#29R40%&	29.40	1/8	L, U	T, Q, A, B	R	P	NO SOURCE
RBR75#29R80%&	29.80	1/8	L, U	T, Q, A, B	R	P	NO SOURCE
RBR75#30R10%&	30.10	1/8	L, U	T, Q, A, B	R	P	NO SOURCE
RBR75#30R50%&	30.50	1/8	L, U	T, Q, A, B	R	P	NO SOURCE
RBR75#30R90%&	30.90	1/8	L, U	T, Q, A, B	R	P	NO SOURCE
RBR75#31R20%&	31.20	1/8	L, U	T, Q, A, B	R	P	NO SOURCE
RBR75#31R60%&	31.60	1/8	L, U	T, Q, A, B	R	P	NO SOURCE
RBR75#32R00%&	32.00	1/8	L, U	T, Q, A, B	R	P	NO SOURCE
	Resistance	Power	Terminal	Resistance	Level 1	Level 2	
Part Number	Value (Ohms)	Rating (W)	Characteristic (#)	Tolerance (%)	(FRL)(&)	(FRL)(&)	Manufacturer
RBR75#32R40%&	32.40	1/8	L, U	T, Q, A, B	R	P	NO SOURCE
RBR75#32R80%&	32.80	1/8	L, U	T, Q, A, B	R	P	NO SOURCE
RBR75#33R20%&	33.20	1/8	L, U	T, Q, A, B	R	P	NO SOURCE
RBR75#33R60%&	33.60	1/8	L, U	T, Q, A, B	R	P	NO SOURCE
RBR75#34R00%&	34.00	1/8	L, U	T, Q, A, B	R	P	NO SOURCE

RBR75#34R40%&	34.40	1/8	L, U	T, Q, A, B	R	P	NO SOURCE
RBR75#34R80%&	34.80	1/8	L, U	T, Q, A, B	R	P	NO SOURCE
RBR75#35R20%&	35.20	1/8	L, U	T, Q, A, B	R	P	NO SOURCE
RBR75#35R70%&	35.70	1/8	L, U	T, Q, A, B	R	P	NO SOURCE
RBR75#36R10%&	36.10	1/8	L, U	T, Q, A, B	R	P	NO SOURCE
RBR75#36R50%&	36.50	1/8	L, U	T, Q, A, B	R	P	NO SOURCE
RBR75#37R00%&	37.00	1/8	L, U	T, Q, A, B	R	P	NO SOURCE
	Resistance	Power	Terminal	Resistance	Level 1	Level 2	
Part Number	Value (Ohms)	Rating (W)	Characteristic (#)	Tolerance (%)	(FRL)(&)	(FRL)(&)	Manufacturer
RBR75#37R40%&	37.40	1/8	L, U	T, Q, A, B	R	P	NO SOURCE
RBR75#37R90%&	37.90	1/8	L, U	T, Q, A, B	R	P	NO SOURCE
RBR75#38R30%&	38.30	1/8	L, U	T, Q, A, B	R	P	NO SOURCE
RBR75#38R80%&	38.80	1/8	L, U	T, Q, A, B	R	P	NO SOURCE
RBR75#39R20%&	39.20	1/8	L, U	T, Q, A, B	R	P	NO SOURCE
RBR75#39R70%&	39.70	1/8	L, U	T, Q, A, B	R	P	NO SOURCE
RBR75#40R20%&	40.20	1/8	L, U	T, Q, A, B	R	P	NO SOURCE
RBR75#40R70%&	40.70	1/8	L, U	T, Q, A, B	R	P	NO SOURCE
RBR75#41R20%&	41.20	1/8	L, U	T, Q, A, B	R	P	NO SOURCE
RBR75#41R70%&	41.70	1/8	L, U	T, Q, A, B	R	P	NO SOURCE
RBR75#42R20%&	42.20	1/8	L, U	T, Q, A, B	R	P	NO SOURCE
RBR75#42R70%&	42.70	1/8	L, U	T, Q, A, B	R	P	NO SOURCE
RBR75#43R20%&	43.20	1/8	L, U	T, Q, A, B	R	P	NO SOURCE
RBR75#43R70%&	43.70	1/8	L, U	T, Q, A, B	R	P	NO SOURCE
	Resistance	Power	Terminal	Resistance	Level 1	Level 2	
Part Number	Value (Ohms)	Rating (W)	Characteristic (#)	Tolerance (%)	(FRL)(&)	(FRL)(&)	Manufacturer
RBR75#44R20%&	44.20	1/8	L, U	T, Q, A, B	R	P	NO SOURCE
RBR75#44R80%&	44.80	1/8	L, U	T, Q, A, B	R	P	NO SOURCE
RBR75#45R30%&	45.30	1/8	L, U	T, Q, A, B	R	P	NO SOURCE
RBR75#45R90%&	45.90	1/8	L, U	T, Q, A, B	R	P	NO SOURCE
RBR75#46R40%&	46.40	1/8	L, U	T, Q, A, B	R	P	NO SOURCE
RBR75#47R00%&	47.00	1/8	L, U	T, Q, A, B	R	P	NO SOURCE
RBR75#47R50%&	47.50	1/8	L, U	T, Q, A, B	R	P	NO SOURCE
RBR75#48R10%&	48.10	1/8	L, U	T, Q, A, B	R	P	NO SOURCE
RBR75#48R70%&	48.70	1/8	L, U	T, Q, A, B	R	P	NO SOURCE
RBR75#49R30%&	49.30	1/8	L, U	T, Q, A, B	R	P	NO SOURCE
RBR75#49R90%&	49.90	1/8	L, U	T, Q, A, B	R	P	NO SOURCE
RBR75#50R50%&	50.50	1/8	L, U	T, Q, A, B	R	P	NO SOURCE
RBR75#51R10%&	51.10	1/8	L, U	T, Q, A, B	R	P	NO SOURCE
RBR75#51R70%&	51.70	1/8	L, U	T, Q, A, B	R	P	NO SOURCE
	Resistance	Power	Terminal	Resistance	Level 1	Level 2	
Part Number	Value (Ohms)	Rating (W)	Characteristic (#)	Tolerance (%)	(FRL)(&)	(FRL)(&)	Manufacturer
RBR75#52R30%&	52.30	1/8	L, U	T, Q, A, B	R	P	NO SOURCE
RBR75#53R00%&	53.00	1/8	L, U	T, Q, A, B	R	P	NO SOURCE
RBR75#53R60%&	53.60	1/8	L, U	T, Q, A, B	R	P	NO SOURCE
RBR75#54R20%&	54.20	1/8	L, U	T, Q, A, B	R	P	NO SOURCE
RBR75#54R90%&	54.90	1/8	L, U	T, Q, A, B	R	P	NO SOURCE
RBR75#55R60%&	55.60	1/8	L, U	T, Q, A, B	R	P	NO SOURCE

RBR75#56R20%&	56.20	1/8	L, U	T, Q, A, B	R	P	NO SOURCE
RBR75#56R90%&	56.90	1/8	L, U	T, Q, A, B	R	P	NO SOURCE
RBR75#57R60%&	57.60	1/8	L, U	T, Q, A, B	R	P	NO SOURCE
RBR75#58R30%&	58.30	1/8	L, U	T, Q, A, B	R	P	NO SOURCE
RBR75#59R00%&	59.00	1/8	L, U	T, Q, A, B	R	P	NO SOURCE
RBR75#59R70%&	59.70	1/8	L, U	T, Q, A, B	R	P	NO SOURCE
RBR75#60R40%&	60.40	1/8	L, U	T, Q, A, B	R	P	NO SOURCE
RBR75#61R20%&	61.20	1/8	L, U	T, Q, A, B	R	P	NO SOURCE
	Resistance	Power	Terminal	Resistance	Level 1	Level 2	
Part Number	Value (Ohms)	Rating (W)	Characteristic (#)	Tolerance (%)	(FRL)(&)	(FRL)(&)	Manufacturer
RBR75#61R90%&	61.90	1/8	L, U	T, Q, A, B	R	P	NO SOURCE
RBR75#62R60%&	62.60	1/8	L, U	T, Q, A, B	R	P	NO SOURCE
RBR75#63R40%&	63.40	1/8	L, U	T, Q, A, B	R	P	NO SOURCE
RBR75#64R20%&	64.20	1/8	L, U	T, Q, A, B	R	P	NO SOURCE
RBR75#64R90%&	64.90	1/8	L, U	T, Q, A, B	R	P	NO SOURCE
RBR75#65R70%&	65.70	1/8	L, U	T, Q, A, B	R	P	NO SOURCE
RBR75#66R50%&	66.50	1/8	L, U	T, Q, A, B	R	P	NO SOURCE
RBR75#67R30%&	67.30	1/8	L, U	T, Q, A, B	R	P	NO SOURCE
RBR75#68R10%&	68.10	1/8	L, U	T, Q, A, B	R	P	NO SOURCE
RBR75#69R00%&	69.00	1/8	L, U	T, Q, A, B	R	P	NO SOURCE
RBR75#69R80%&	69.80	1/8	L, U	T, Q, A, B	R	P	NO SOURCE
RBR75#70R60%&	70.60	1/8	L, U	T, Q, A, B	R	P	NO SOURCE
RBR75#71R50%&	71.50	1/8	L, U	T, Q, A, B	R	P	NO SOURCE
RBR75#72R30%&	72.30	1/8	L, U	T, Q, A, B	R	P	NO SOURCE
	Resistance	Power	Terminal	Resistance	Level 1	Level 2	
Part Number	Value (Ohms)	Rating (W)	Characteristic (#)	Tolerance (%)	(FRL)(&)	(FRL)(&)	Manufacturer
RBR75#73R20%&	73.20	1/8	L, U	T, Q, A, B	R	P	NO SOURCE
RBR75#74R10%&	74.10	1/8	L, U	T, Q, A, B	R	P	NO SOURCE
RBR75#75R00%&	75.00	1/8	L, U	T, Q, A, B	R	P	NO SOURCE
RBR75#75R90%&	75.90	1/8	L, U	T, Q, A, B	R	P	NO SOURCE
RBR75#76R80%&	76.80	1/8	L, U	T, Q, A, B	R	P	NO SOURCE
RBR75#77R70%&	77.70	1/8	L, U	T, Q, A, B	R	P	NO SOURCE
RBR75#78R70%&	78.70	1/8	L, U	T, Q, A, B	R	P	NO SOURCE
RBR75#79R60%&	79.60	1/8	L, U	T, Q, A, B	R	P	NO SOURCE
RBR75#80R60%&	80.60	1/8	L, U	T, Q, A, B	R	P	NO SOURCE
RBR75#81R60%&	81.60	1/8	L, U	T, Q, A, B	R	P	NO SOURCE
RBR75#82R50%&	82.50	1/8	L, U	T, Q, A, B	R	P	NO SOURCE
RBR75#83R50%&	83.50	1/8	L, U	T, Q, A, B	R	P	NO SOURCE
	Resistance	Power	Terminal	Resistance	Level 1	Level 2	
Part Number	Value (Ohms)	Rating (W)	Characteristic (#)	Tolerance (%)	(FRL)(&)	(FRL)(&)	Manufacturer
RBR75#84R50%&	84.50	1/8	L, U	T, Q, A, B	R	P	NO SOURCE
RBR75#85R60%&	85.60	1/8	L, U	T, Q, A, B	R	P	NO SOURCE
RBR75#86R60%&	86.60	1/8	L, U	T, Q, A, B	R	P	NO SOURCE
RBR75#87R60%&	87.60	1/8	L, U	T, Q, A, B	R	P	NO SOURCE
RBR75#88R70%&	88.70	1/8	L, U	T, Q, A, B	R	P	NO SOURCE
RBR75#89R80%&	89.80	1/8	L, U	T, Q, A, B	R	P	NO SOURCE
RBR75#90R90%&	90.90	1/8	L, U	T, Q, A, B	R	P	NO SOURCE

RBR75#92R00%&	92.00	1/8	L, U	T, Q, A, B	R	P	NO SOURCE
RBR75#93R10%&	93.10	1/8	L, U	T, Q, A, B	R	P	NO SOURCE
RBR75#94R20%&	94.20	1/8	L, U	T, Q, A, B	R	P	NO SOURCE
RBR75#95R30%&	95.30	1/8	L, U	T, Q, A, B	R	P	NO SOURCE
RBR75#96R50%&	96.50	1/8	L, U	T, Q, A, B	R	P	NO SOURCE
RBR75#97R60%&	97.60	1/8	L, U	T, Q, A, B	R	P	NO SOURCE
RBR75#98R80%&	98.80	1/8	L, U	T, Q, A, B	R	P	NO SOURCE
	Resistance	Power	Terminal	Resistance	Level 1	Level 2	
Part Number	Value (Ohms)	Rating (W)	Characteristic (#)	Tolerance (%)	(FRL)(&)	(FRL)(&)	Manufacturer

RBR75 Wirewound Resistors: 100.0 Ohms through 988.0 Ohms

	Resistance	Power	Terminal	Resistance	Level 1	Level 2	
Part Number	Value (Ohms)	Rating (W)	Characteristic (#)	Tolerance (%)	(FRL)(&)	(FRL)(&)	Manufacturer
RBR75#100R0%&	100.0	1/8	L, U	T, Q, A, B	R	P	NO SOURCE
RBR75#101R0%&	101.0	1/8	L, U	T, Q, A, B	R	P	NO SOURCE
RBR75#102R0%&	102.0	1/8	L, U	T, Q, A, B	R	P	NO SOURCE
RBR75#104R0%&	104.0	1/8	L, U	T, Q, A, B	R	P	NO SOURCE
RBR75#105R0%&	105.0	1/8	L, U	T, Q, A, B	R	P	NO SOURCE
RBR75#106R0%&	106.0	1/8	L, U	T, Q, A, B	R	P	NO SOURCE
RBR75#107R0%&	107.0	1/8	L, U	T, Q, A, B	R	P	NO SOURCE
RBR75#109R0%&	109.0	1/8	L, U	T, Q, A, B	R	P	NO SOURCE
RBR75#110R0%&	110.0	1/8	L, U	T, Q, A, B	R	P	NO SOURCE
RBR75#111R0%&	111.0	1/8	L, U	T, Q, A, B	R	P	NO SOURCE
RBR75#113R0%&	113.0	1/8	L, U	T, Q, A, B	R	P	NO SOURCE
RBR75#114R0%&	114.0	1/8	L, U	T, Q, A, B	R	P	NO SOURCE
RBR75#115R0%&	115.0	1/8	L, U	T, Q, A, B	R	P	NO SOURCE
RBR75#117R0%&	117.0	1/8	L, U	T, Q, A, B	R	P	NO SOURCE
	Resistance	Power	Terminal	Resistance	Level 1	Level 2	
Part Number	Value (Ohms)	Rating (W)	Characteristic (#)	Tolerance (%)	(FRL)(&)	(FRL)(&)	Manufacturer
RBR75#118R0%&	118.0	1/8	L, U	T, Q, A, B	R	P	NO SOURCE
RBR75#120R0%&	120.0	1/8	L, U	T, Q, A, B	R	P	NO SOURCE
RBR75#121R0%&	121.0	1/8	L, U	T, Q, A, B	R	P	NO SOURCE
RBR75#123R0%&	123.0	1/8	L, U	T, Q, A, B	R	P	NO SOURCE
RBR75#124R0%&	124.0	1/8	L, U	T, Q, A, B	R	P	NO SOURCE
RBR75#126R0%&	126.0	1/8	L, U	T, Q, A, B	R	P	NO SOURCE
RBR75#127R0%&	127.0	1/8	L, U	T, Q, A, B	R	P	NO SOURCE
RBR75#129R0%&	129.0	1/8	L, U	T, Q, A, B	R	P	NO SOURCE
RBR75#130R0%&	130.0	1/8	L, U	T, Q, A, B	R	P	NO SOURCE
RBR75#132R0%&	132.0	1/8	L, U	T, Q, A, B	R	P	NO SOURCE
RBR75#133R0%&	133.0	1/8	L, U	T, Q, A, B	R	P	NO SOURCE
RBR75#135R0%&	135.0	1/8	L, U	T, Q, A, B	R	P	NO SOURCE
RBR75#137R0%&	137.0	1/8	L, U	T, Q, A, B	R	P	NO SOURCE
RBR75#138R0%&	138.0	1/8	L, U	T, Q, A, B	R	P	NO SOURCE
	Resistance	Power	Terminal	Resistance	Level 1	Level 2	

Part Number	Value (Ohms)	Rating (W)	Characteristic (#)	Tolerance (%)	(FRL)(&)	(FRL)(&)	Manufacturer
RBR75#140R0%&	140.0	1/8	L, U	T, Q, A, B	R	P	NO SOURCE
RBR75#142R0%&	142.0	1/8	L, U	T, Q, A, B	R	P	NO SOURCE
RBR75#143R0%&	143.0	1/8	L, U	T, Q, A, B	R	P	NO SOURCE
RBR75#145R0%&	145.0	1/8	L, U	T, Q, A, B	R	P	NO SOURCE
RBR75#147R0%&	147.0	1/8	L, U	T, Q, A, B	R	P	NO SOURCE
RBR75#149R0%&	149.0	1/8	L, U	T, Q, A, B	R	P	NO SOURCE
RBR75#150R0%&	150.0	1/8	L, U	T, Q, A, B	R	P	NO SOURCE
RBR75#152R0%&	152.0	1/8	L, U	T, Q, A, B	R	P	NO SOURCE
RBR75#154R0%&	154.0	1/8	L, U	T, Q, A, B	R	P	NO SOURCE
RBR75#156R0%&	156.0	1/8	L, U	T, Q, A, B	R	P	NO SOURCE
RBR75#158R0%&	158.0	1/8	L, U	T, Q, A, B	R	P	NO SOURCE
RBR75#160R0%&	160.0	1/8	L, U	T, Q, A, B	R	P	NO SOURCE
RBR75#162R0%&	162.0	1/8	L, U	T, Q, A, B	R	P	NO SOURCE
RBR75#164R0%&	164.0	1/8	L, U	T, Q, A, B	R	P	NO SOURCE
	Resistance	Power	Terminal	Resistance	Level 1	Level 2	
Part Number	Value (Ohms)	Rating (W)	Characteristic (#)	Tolerance (%)	(FRL)(&)	(FRL)(&)	Manufacturer
RBR75#165R0%&	165.0	1/8	L, U	T, Q, A, B	R	P	NO SOURCE
RBR75#167R0%&	167.0	1/8	L, U	T, Q, A, B	R	P	NO SOURCE
RBR75#169R0%&	169.0	1/8	L, U	T, Q, A, B	R	P	NO SOURCE
RBR75#172R0%&	172.0	1/8	L, U	T, Q, A, B	R	P	NO SOURCE
RBR75#174R0%&	174.0	1/8	L, U	T, Q, A, B	R	P	NO SOURCE
RBR75#176R0%&	176.0	1/8	L, U	T, Q, A, B	R	P	NO SOURCE
RBR75#178R0%&	178.0	1/8	L, U	T, Q, A, B	R	P	NO SOURCE
RBR75#180R0%&	180.0	1/8	L, U	T, Q, A, B	R	P	NO SOURCE
RBR75#182R0%&	182.0	1/8	L, U	T, Q, A, B	R	P	NO SOURCE
RBR75#184R0%&	184.0	1/8	L, U	T, Q, A, B	R	P	NO SOURCE
RBR75#187R0%&	187.0	1/8	L, U	T, Q, A, B	R	P	NO SOURCE
RBR75#189R0%&	189.0	1/8	L, U	T, Q, A, B	R	P	NO SOURCE
RBR75#191R0%&	191.0	1/8	L, U	T, Q, A, B	R	P	NO SOURCE
RBR75#193R0%&	193.0	1/8	L, U	T, Q, A, B	R	P	NO SOURCE
	Resistance	Power	Terminal	Resistance	Level 1	Level 2	
Part Number	Value (Ohms)	Rating (W)	Characteristic (#)	Tolerance (%)	(FRL)(&)	(FRL)(&)	Manufacturer
RBR75#196R0%&	196.0	1/8	L, U	T, Q, A, B	R	P	NO SOURCE
RBR75#198R0%&	198.0	1/8	L, U	T, Q, A, B	R	P	NO SOURCE
RBR75#200R0%&	200.0	1/8	L, U	T, Q, A, B	R	P	NO SOURCE
RBR75#203R0%&	203.0	1/8	L, U	T, Q, A, B	R	P	NO SOURCE
RBR75#205R0%&	205.0	1/8	L, U	T, Q, A, B	R	P	NO SOURCE
RBR75#208R0%&	208.0	1/8	L, U	T, Q, A, B	R	P	NO SOURCE
RBR75#210R0%&	210.0	1/8	L, U	T, Q, A, B	R	P	NO SOURCE
RBR75#213R0%&	213.0	1/8	L, U	T, Q, A, B	R	P	NO SOURCE
RBR75#215R0%&	215.0	1/8	L, U	T, Q, A, B	R	P	NO SOURCE
RBR75#218R0%&	218.0	1/8	L, U	T, Q, A, B	R	P	NO SOURCE
RBR75#221R0%&	221.0	1/8	L, U	T, Q, A, B	R	P	NO SOURCE
RBR75#223R0%&	223.0	1/8	L, U	T, Q, A, B	R	P	NO SOURCE
RBR75#226R0%&	226.0	1/8	L, U	T, Q, A, B	R	P	NO SOURCE
RBR75#229R0%&	229.0	1/8	L, U	T, Q, A, B	R	P	NO SOURCE

	Resistance	Power	Terminal	Resistance	Level 1	Level 2	
Part Number	Value (Ohms)	Rating (W)	Characteristic (#)	Tolerance (%)	(FRL)(&)	(FRL)(&)	Manufacturer
RBR75#232R0%&	232.0	1/8	L, U	T, Q, A, B	R	P	NO SOURCE
RBR75#234R0%&	234.0	1/8	L, U	T, Q, A, B	R	P	NO SOURCE
RBR75#237R0%&	237.0	1/8	L, U	T, Q, A, B	R	P	NO SOURCE
RBR75#240R0%&	240.0	1/8	L, U	T, Q, A, B	R	P	NO SOURCE
RBR75#243R0%&	243.0	1/8	L, U	T, Q, A, B	R	P	NO SOURCE
RBR75#246R0%&	246.0	1/8	L, U	T, Q, A, B	R	P	NO SOURCE
RBR75#249R0%&	249.0	1/8	L, U	T, Q, A, B	R	P	NO SOURCE
RBR75#252R0%&	252.0	1/8	L, U	T, Q, A, B	R	P	NO SOURCE
RBR75#255R0%&	255.0	1/8	L, U	T, Q, A, B	R	P	NO SOURCE
RBR75#258R0%&	258.0	1/8	L, U	T, Q, A, B	R	P	NO SOURCE
RBR75#261R0%&	261.0	1/8	L, U	T, Q, A, B	R	P	NO SOURCE
RBR75#264R0%&	264.0	1/8	L, U	T, Q, A, B	R	P	NO SOURCE
RBR75#267R0%&	267.0	1/8	L, U	T, Q, A, B	R	P	NO SOURCE
RBR75#271R0%&	271.0	1/8	L, U	T, Q, A, B	R	P	NO SOURCE
	Resistance	Power	Terminal	Resistance	Level 1	Level 2	
Part Number	Value (Ohms)	Rating (W)	Characteristic (#)	Tolerance (%)	(FRL)(&)	(FRL)(&)	Manufacturer
RBR75#274R0%&	274.0	1/8	L, U	T, Q, A, B	R	P	NO SOURCE
RBR75#277R0%&	277.0	1/8	L, U	T, Q, A, B	R	P	NO SOURCE
RBR75#280R0%&	280.0	1/8	L, U	T, Q, A, B	R	P	NO SOURCE
RBR75#284R0%&	284.0	1/8	L, U	T, Q, A, B	R	P	NO SOURCE
RBR75#287R0%&	287.0	1/8	L, U	T, Q, A, B	R	P	NO SOURCE
RBR75#291R0%&	291.0	1/8	L, U	T, Q, A, B	R	P	NO SOURCE
RBR75#294R0%&	294.0	1/8	L, U	T, Q, A, B	R	P	NO SOURCE
RBR75#298R0%&	298.0	1/8	L, U	T, Q, A, B	R	P	NO SOURCE
RBR75#301R0%&	301.0	1/8	L, U	T, Q, A, B	R	P	NO SOURCE
RBR75#305R0%&	305.0	1/8	L, U	T, Q, A, B	R	P	NO SOURCE
RBR75#309R0%&	309.0	1/8	L, U	T, Q, A, B	R	P	NO SOURCE
RBR75#312R0%&	312.0	1/8	L, U	T, Q, A, B	R	P	NO SOURCE
	Resistance	Power	Terminal	Resistance	Level 1	Level 2	
Part Number	Value (Ohms)	Rating (W)	Characteristic (#)	Tolerance (%)	(FRL)(&)	(FRL)(&)	Manufacturer
RBR75#316R0%&	316.0	1/8	L, U	T, Q, A, B	R	P	NO SOURCE
RBR75#320R0%&	320.0	1/8	L, U	T, Q, A, B	R	P	NO SOURCE
RBR75#324R0%&	324.0	1/8	L, U	T, Q, A, B	R	P	NO SOURCE
RBR75#328R0%&	328.0	1/8	L, U	T, Q, A, B	R	P	NO SOURCE
RBR75#332R0%&	332.0	1/8	L, U	T, Q, A, B	R	P	NO SOURCE
RBR75#336R0%&	336.0	1/8	L, U	T, Q, A, B	R	P	NO SOURCE
RBR75#340R0%&	340.0	1/8	L, U	T, Q, A, B	R	P	NO SOURCE
RBR75#344R0%&	344.0	1/8	L, U	T, Q, A, B	R	P	NO SOURCE
RBR75#348R0%&	348.0	1/8	L, U	T, Q, A, B	R	P	NO SOURCE
RBR75#352R0%&	352.0	1/8	L, U	T, Q, A, B	R	P	NO SOURCE
RBR75#357R0%&	357.0	1/8	L, U	T, Q, A, B	R	P	NO SOURCE
RBR75#361R0%&	361.0	1/8	L, U	T, Q, A, B	R	P	NO SOURCE
RBR75#365R0%&	365.0	1/8	L, U	T, Q, A, B	R	P	NO SOURCE
RBR75#370R0%&	370.0	1/8	L, U	T, Q, A, B	R	P	NO SOURCE
	Resistance	Power	Terminal	Resistance	Level 1	Level 2	

Part Number	Value (Ohms)	Rating (W)	Characteristic (#)	Tolerance (%)	(FRL)(&)	(FRL)(&)	Manufacturer
RBR75#374R0%&	374.0	1/8	L, U	T, Q, A, B	R	P	NO SOURCE
RBR75#379R0%&	379.0	1/8	L, U	T, Q, A, B	R	P	NO SOURCE
RBR75#383R0%&	383.0	1/8	L, U	T, Q, A, B	R	P	NO SOURCE
RBR75#388R0%&	388.0	1/8	L, U	T, Q, A, B	R	P	NO SOURCE
RBR75#392R0%&	392.0	1/8	L, U	T, Q, A, B	R	P	NO SOURCE
RBR75#397R0%&	397.0	1/8	L, U	T, Q, A, B	R	P	NO SOURCE
RBR75#402R0%&	402.0	1/8	L, U	T, Q, A, B	R	P	NO SOURCE
RBR75#407R0%&	407.0	1/8	L, U	T, Q, A, B	R	P	NO SOURCE
RBR75#412R0%&	412.0	1/8	L, U	T, Q, A, B	R	P	NO SOURCE
RBR75#417R0%&	417.0	1/8	L, U	T, Q, A, B	R	P	NO SOURCE
RBR75#422R0%&	422.0	1/8	L, U	T, Q, A, B	R	P	NO SOURCE
RBR75#427R0%&	427.0	1/8	L, U	T, Q, A, B	R	P	NO SOURCE
RBR75#432R0%&	432.0	1/8	L, U	T, Q, A, B	R	P	NO SOURCE
RBR75#437R0%&	437.0	1/8	L, U	T, Q, A, B	R	P	NO SOURCE
	Resistance	Power	Terminal	Resistance	Level 1	Level 2	
Part Number	Value (Ohms)	Rating (W)	Characteristic (#)	Tolerance (%)	(FRL)(&)	(FRL)(&)	Manufacturer
RBR75#442R0%&	442.0	1/8	L, U	T, Q, A, B	R	P	NO SOURCE
RBR75#448R0%&	448.0	1/8	L, U	T, Q, A, B	R	P	NO SOURCE
RBR75#453R0%&	453.0	1/8	L, U	T, Q, A, B	R	P	NO SOURCE
RBR75#459R0%&	459.0	1/8	L, U	T, Q, A, B	R	P	NO SOURCE
RBR75#464R0%&	464.0	1/8	L, U	T, Q, A, B	R	P	NO SOURCE
RBR75#470R0%&	470.0	1/8	L, U	T, Q, A, B	R	P	NO SOURCE
RBR75#475R0%&	475.0	1/8	L, U	T, Q, A, B	R	P	NO SOURCE
RBR75#481R0%&	481.0	1/8	L, U	T, Q, A, B	R	P	NO SOURCE
RBR75#487R0%&	487.0	1/8	L, U	T, Q, A, B	R	P	NO SOURCE
RBR75#493R0%&	493.0	1/8	L, U	T, Q, A, B	R	P	NO SOURCE
RBR75#499R0%&	499.0	1/8	L, U	T, Q, A, B	R	P	NO SOURCE
RBR75#505R0%&	505.0	1/8	L, U	T, Q, A, B	R	P	NO SOURCE
RBR75#511R0%&	511.0	1/8	L, U	T, Q, A, B	R	P	NO SOURCE
RBR75#517R0%&	517.0	1/8	L, U	T, Q, A, B	R	P	NO SOURCE
	Resistance	Power	Terminal	Resistance	Level 1	Level 2	
Part Number	Value (Ohms)	Rating (W)	Characteristic (#)	Tolerance (%)	(FRL)(&)	(FRL)(&)	Manufacturer
RBR75#523R0%&	523.0	1/8	L, U	T, Q, A, B	R	P	NO SOURCE
RBR75#530R0%&	530.0	1/8	L, U	T, Q, A, B	R	P	NO SOURCE
RBR75#536R0%&	536.0	1/8	L, U	T, Q, A, B	R	P	NO SOURCE
RBR75#542R0%&	542.0	1/8	L, U	T, Q, A, B	R	P	NO SOURCE
RBR75#549R0%&	549.0	1/8	L, U	T, Q, A, B	R	P	NO SOURCE
RBR75#556R0%&	556.0	1/8	L, U	T, Q, A, B	R	P	NO SOURCE
RBR75#562R0%&	562.0	1/8	L, U	T, Q, A, B	R	P	NO SOURCE
RBR75#569R0%&	569.0	1/8	L, U	T, Q, A, B	R	P	NO SOURCE
RBR75#576R0%&	576.0	1/8	L, U	T, Q, A, B	R	P	NO SOURCE
RBR75#583R0%&	583.0	1/8	L, U	T, Q, A, B	R	P	NO SOURCE
RBR75#590R0%&	590.0	1/8	L, U	T, Q, A, B	R	P	NO SOURCE
RBR75#597R0%&	597.0	1/8	L, U	T, Q, A, B	R	P	NO SOURCE
RBR75#604R0%&	604.0	1/8	L, U	T, Q, A, B	R	P	NO SOURCE
RBR75#612R0%&	612.0	1/8	L, U	T, Q, A, B	R	P	NO SOURCE

	Resistance	Power	Terminal	Resistance	Level 1	Level 2	
Part Number	Value (Ohms)	Rating (W)	Characteristic (#)	Tolerance (%)	(FRL)(&)	(FRL)(&)	Manufacturer
RBR75#619R0%&	619.0	1/8	L, U	T, Q, A, B	R	P	NO SOURCE
RBR75#626R0%&	626.0	1/8	L, U	T, Q, A, B	R	P	NO SOURCE
RBR75#634R0%&	634.0	1/8	L, U	T, Q, A, B	R	P	NO SOURCE
RBR75#642R0%&	642.0	1/8	L, U	T, Q, A, B	R	P	NO SOURCE
RBR75#649R0%&	649.0	1/8	L, U	T, Q, A, B	R	P	NO SOURCE
RBR75#657R0%&	657.0	1/8	L, U	T, Q, A, B	R	P	NO SOURCE
RBR75#665R0%&	665.0	1/8	L, U	T, Q, A, B	R	P	NO SOURCE
RBR75#673R0%&	673.0	1/8	L, U	T, Q, A, B	R	P	NO SOURCE
RBR75#681R0%&	681.0	1/8	L, U	T, Q, A, B	R	P	NO SOURCE
RBR75#690R0%&	690.0	1/8	L, U	T, Q, A, B	R	P	NO SOURCE
RBR75#698R0%&	698.0	1/8	L, U	T, Q, A, B	R	P	NO SOURCE
RBR75#706R0%&	706.0	1/8	L, U	T, Q, A, B	R	P	NO SOURCE
	Resistance	Power	Terminal	Resistance	Level 1	Level 2	
Part Number	Value (Ohms)	Rating (W)	Characteristic (#)	Tolerance (%)	(FRL)(&)	(FRL)(&)	Manufacturer
RBR75#715R0%&	715.0	1/8	L, U	T, Q, A, B	R	P	NO SOURCE
RBR75#723R0%&	723.0	1/8	L, U	T, Q, A, B	R	P	NO SOURCE
RBR75#732R0%&	732.0	1/8	L, U	T, Q, A, B	R	P	NO SOURCE
RBR75#741R0%&	741.0	1/8	L, U	T, Q, A, B	R	P	NO SOURCE
RBR75#750R0%&	750.0	1/8	L, U	T, Q, A, B	R	P	NO SOURCE
RBR75#759R0%&	759.0	1/8	L, U	T, Q, A, B	R	P	NO SOURCE
RBR75#768R0%&	768.0	1/8	L, U	T, Q, A, B	R	P	NO SOURCE
RBR75#777R0%&	777.0	1/8	L, U	T, Q, A, B	R	P	NO SOURCE
RBR75#787R0%&	787.0	1/8	L, U	T, Q, A, B	R	P	NO SOURCE
RBR75#796R0%&	796.0	1/8	L, U	T, Q, A, B	R	P	NO SOURCE
RBR75#806R0%&	806.0	1/8	L, U	T, Q, A, B	R	P	NO SOURCE
RBR75#816R0%&	816.0	1/8	L, U	T, Q, A, B	R	P	NO SOURCE
RBR75#825R0%&	825.0	1/8	L, U	T, Q, A, B	R	P	NO SOURCE
RBR75#835R0%&	835.0	1/8	L, U	T, Q, A, B	R	P	NO SOURCE
	Resistance	Power	Terminal	Resistance	Level 1	Level 2	
Part Number	Value (Ohms)	Rating (W)	Characteristic (#)	Tolerance (%)	(FRL)(&)	(FRL)(&)	Manufacturer
RBR75#845R0%&	845.0	1/8	L, U	T, Q, A, B	R	P	NO SOURCE
RBR75#856R0%&	856.0	1/8	L, U	T, Q, A, B	R	P	NO SOURCE
RBR75#866R0%&	866.0	1/8	L, U	T, Q, A, B	R	P	NO SOURCE
RBR75#876R0%&	876.0	1/8	L, U	T, Q, A, B	R	P	NO SOURCE
RBR75#887R0%&	887.0	1/8	L, U	T, Q, A, B	R	P	NO SOURCE
RBR75#898R0%&	898.0	1/8	L, U	T, Q, A, B	R	P	NO SOURCE
RBR75#909R0%&	909.0	1/8	L, U	T, Q, A, B	R	P	NO SOURCE
RBR75#920R0%&	920.0	1/8	L, U	T, Q, A, B	R	P	NO SOURCE
RBR75#931R0%&	931.0	1/8	L, U	T, Q, A, B	R	P	NO SOURCE
RBR75#942R0%&	942.0	1/8	L, U	T, Q, A, B	R	P	NO SOURCE
RBR75#953R0%&	953.0	1/8	L, U	T, Q, A, B	R	P	NO SOURCE
RBR75#965R0%&	965.0	1/8	L, U	T, Q, A, B	R	P	NO SOURCE
RBR75#976R0%&	976.0	1/8	L, U	T, Q, A, B	R	P	NO SOURCE
RBR75#988R0%&	988.0	1/8	L, U	T, Q, A, B	R	P	NO SOURCE
	Resistance	Power	Terminal	Resistance	Level 1	Level 2	

Part Number	Value (Ohms)	Rating (W)	Characteristic (#)	Tolerance (%)	(FRL)(&)	(FRL)(&)	Manufacturer

RBR75 Wirewound Resistors: 1,000 Ohms through 9,880 Ohms

	Resistance	Power	Terminal	Resistance	Level 1	Level 2	
Part Number	Value (Ohms)	Rating (W)	Characteristic (#)	Tolerance (%)	(FRL)(&)	(FRL)(&)	Manufacturer
RBR75#10000%&	1,000	1/8	L, U	T, Q, A, B	R	P	NO SOURCE
RBR75#10100%&	1,010	1/8	L, U	T, Q, A, B	R	P	NO SOURCE
RBR75#10200%&	1,020	1/8	L, U	T, Q, A, B	R	P	NO SOURCE
RBR75#10400%&	1,040	1/8	L, U	T, Q, A, B	R	P	NO SOURCE
RBR75#10500%&	1,050	1/8	L, U	T, Q, A, B	R	P	NO SOURCE
RBR75#10600%&	1,060	1/8	L, U	T, Q, A, B	R	P	NO SOURCE
RBR75#10700%&	1,070	1/8	L, U	T, Q, A, B	R	P	NO SOURCE
RBR75#10900%&	1,090	1/8	L, U	T, Q, A, B	R	P	NO SOURCE
RBR75#11000%&	1,100	1/8	L, U	T, Q, A, B	R	P	NO SOURCE
RBR75#11100%&	1,110	1/8	L, U	T, Q, A, B	R	P	NO SOURCE
RBR75#11300%&	1,130	1/8	L, U	T, Q, A, B	R	P	NO SOURCE
RBR75#11400%&	1,140	1/8	L, U	T, Q, A, B	R	P	NO SOURCE
RBR75#11500%&	1,150	1/8	L, U	T, Q, A, B	R	P	NO SOURCE
RBR75#11700%&	1,170	1/8	L, U	T, Q, A, B	R	P	NO SOURCE
	Resistance	Power	Terminal	Resistance	Level 1	Level 2	
Part Number	Value (Ohms)	Rating (W)	Characteristic (#)	Tolerance (%)	(FRL)(&)	(FRL)(&)	Manufacturer
RBR75#11800%&	1,180	1/8	L, U	T, Q, A, B	R	P	NO SOURCE
RBR75#12000%&	1,200	1/8	L, U	T, Q, A, B	R	P	NO SOURCE
RBR75#12100%&	1,210	1/8	L, U	T, Q, A, B	R	P	NO SOURCE
RBR75#12300%&	1,230	1/8	L, U	T, Q, A, B	R	P	NO SOURCE
RBR75#12400%&	1,240	1/8	L, U	T, Q, A, B	R	P	NO SOURCE
RBR75#12600%&	1,260	1/8	L, U	T, Q, A, B	R	P	NO SOURCE
RBR75#12700%&	1,270	1/8	L, U	T, Q, A, B	R	P	NO SOURCE
RBR75#12900%&	1,290	1/8	L, U	T, Q, A, B	R	P	NO SOURCE
RBR75#13000%&	1,300	1/8	L, U	T, Q, A, B	R	P	NO SOURCE
RBR75#13200%&	1,320	1/8	L, U	T, Q, A, B	R	P	NO SOURCE
RBR75#13300%&	1,330	1/8	L, U	T, Q, A, B	R	P	NO SOURCE
RBR75#13500%&	1,350	1/8	L, U	T, Q, A, B	R	P	NO SOURCE
RBR75#13700%&	1,370	1/8	L, U	T, Q, A, B	R	P	NO SOURCE
RBR75#13800%&	1,380	1/8	L, U	T, Q, A, B	R	P	NO SOURCE
	Resistance	Power	Terminal	Resistance	Level 1	Level 2	
Part Number	Value (Ohms)	Rating (W)	Characteristic (#)	Tolerance (%)	(FRL)(&)	(FRL)(&)	Manufacturer
RBR75#14000%&	1,400	1/8	L, U	T, Q, A, B	R	P	NO SOURCE
RBR75#14200%&	1,420	1/8	L, U	T, Q, A, B	R	P	NO SOURCE
RBR75#14300%&	1,430	1/8	L, U	T, Q, A, B	R	P	NO SOURCE
RBR75#14500%&	1,450	1/8	L, U	T, Q, A, B	R	P	NO SOURCE
RBR75#14700%&	1,470	1/8	L, U	T, Q, A, B	R	P	NO SOURCE
RBR75#14900%&	1,490	1/8	L, U	T, Q, A, B	R	P	NO SOURCE
RBR75#15000%&	1,500	1/8	L, U	T, Q, A, B	R	P	NO SOURCE

RBR75#15200%&	1,520	1/8	L, U	T, Q, A, B	R	P	NO SOURCE
RBR75#15400%&	1,540	1/8	L, U	T, Q, A, B	R	P	NO SOURCE
RBR75#15600%&	1,560	1/8	L, U	T, Q, A, B	R	P	NO SOURCE
RBR75#15800%&	1,580	1/8	L, U	T, Q, A, B	R	P	NO SOURCE
RBR75#16000%&	1,600	1/8	L, U	T, Q, A, B	R	P	NO SOURCE
RBR75#16200%&	1,620	1/8	L, U	T, Q, A, B	R	P	NO SOURCE
RBR75#16400%&	1,640	1/8	L, U	T, Q, A, B	R	P	NO SOURCE
	Resistance	Power	Terminal	Resistance	Level 1	Level 2	
Part Number	Value (Ohms)	Rating (W)	Characteristic (#)	Tolerance (%)	(FRL)(&)	(FRL)(&)	Manufacturer
RBR75#16500%&	1,650	1/8	L, U	T, Q, A, B	R	P	NO SOURCE
RBR75#16700%&	1,670	1/8	L, U	T, Q, A, B	R	P	NO SOURCE
RBR75#16900%&	1,690	1/8	L, U	T, Q, A, B	R	P	NO SOURCE
RBR75#17200%&	1,720	1/8	L, U	T, Q, A, B	R	P	NO SOURCE
RBR75#17400%&	1,740	1/8	L, U	T, Q, A, B	R	P	NO SOURCE
RBR75#17600%&	1,760	1/8	L, U	T, Q, A, B	R	P	NO SOURCE
RBR75#17800%&	1,780	1/8	L, U	T, Q, A, B	R	P	NO SOURCE
RBR75#18000%&	1,800	1/8	L, U	T, Q, A, B	R	P	NO SOURCE
RBR75#18200%&	1,820	1/8	L, U	T, Q, A, B	R	P	NO SOURCE
RBR75#18400%&	1,840	1/8	L, U	T, Q, A, B	R	P	NO SOURCE
RBR75#18700%&	1,870	1/8	L, U	T, Q, A, B	R	P	NO SOURCE
RBR75#18900%&	1,890	1/8	L, U	T, Q, A, B	R	P	NO SOURCE
RBR75#19100%&	1,910	1/8	L, U	T, Q, A, B	R	P	NO SOURCE
RBR75#19300%&	1,930	1/8	L, U	T, Q, A, B	R	P	NO SOURCE
	Resistance	Power	Terminal	Resistance	Level 1	Level 2	
Part Number	Value (Ohms)	Rating (W)	Characteristic (#)	Tolerance (%)	(FRL)(&)	(FRL)(&)	Manufacturer
RBR75#19600%&	1,960	1/8	L, U	T, Q, A, B	R	P	NO SOURCE
RBR75#19800%&	1,980	1/8	L, U	T, Q, A, B	R	P	NO SOURCE
RBR75#20000%&	2,000	1/8	L, U	T, Q, A, B	R	P	NO SOURCE
RBR75#20300%&	2,030	1/8	L, U	T, Q, A, B	R	P	NO SOURCE
RBR75#20500%&	2,050	1/8	L, U	T, Q, A, B	R	P	NO SOURCE
RBR75#20800%&	2,080	1/8	L, U	T, Q, A, B	R	P	NO SOURCE
RBR75#21000%&	2,100	1/8	L, U	T, Q, A, B	R	P	NO SOURCE
RBR75#21300%&	2,130	1/8	L, U	T, Q, A, B	R	P	NO SOURCE
RBR75#21500%&	2,150	1/8	L, U	T, Q, A, B	R	P	NO SOURCE
RBR75#21800%&	2,180	1/8	L, U	T, Q, A, B	R	P	NO SOURCE
RBR75#22100%&	2,210	1/8	L, U	T, Q, A, B	R	P	NO SOURCE
RBR75#22300%&	2,230	1/8	L, U	T, Q, A, B	R	P	NO SOURCE
RBR75#22600%&	2,260	1/8	L, U	T, Q, A, B	R	P	NO SOURCE
RBR75#22900%&	2,290	1/8	L, U	T, Q, A, B	R	P	NO SOURCE
	Resistance	Power	Terminal	Resistance	Level 1	Level 2	
Part Number	Value (Ohms)	Rating (W)	Characteristic (#)	Tolerance (%)	(FRL)(&)	(FRL)(&)	Manufacturer
RBR75#23200%&	2,320	1/8	L, U	T, Q, A, B	R	P	NO SOURCE
RBR75#23400%&	2,340	1/8	L, U	T, Q, A, B	R	P	NO SOURCE
RBR75#23700%&	2,370	1/8	L, U	T, Q, A, B	R	P	NO SOURCE
RBR75#24000%&	2,400	1/8	L, U	T, Q, A, B	R	P	NO SOURCE
RBR75#24300%&	2,430	1/8	L, U	T, Q, A, B	R	P	NO SOURCE
RBR75#24600%&	2,460	1/8	L, U	T, Q, A, B	R	P	NO SOURCE

RBR75#24900%&	2,490	1/8	L, U	T, Q, A, B	R	P	NO SOURCE
RBR75#25200%&	2,520	1/8	L, U	T, Q, A, B	R	P	NO SOURCE
RBR75#25500%&	2,550	1/8	L, U	T, Q, A, B	R	P	NO SOURCE
RBR75#25800%&	2,580	1/8	L, U	T, Q, A, B	R	P	NO SOURCE
RBR75#26100%&	2,610	1/8	L, U	T, Q, A, B	R	P	NO SOURCE
RBR75#26400%&	2,640	1/8	L, U	T, Q, A, B	R	P	NO SOURCE
RBR75#26700%&	2,670	1/8	L, U	T, Q, A, B	R	P	NO SOURCE
RBR75#27100%&	2,710	1/8	L, U	T, Q, A, B	R	P	NO SOURCE
	Resistance	Power	Terminal	Resistance	Level 1	Level 2	
Part Number	Value (Ohms)	Rating (W)	Characteristic (#)	Tolerance (%)	(FRL)(&)	(FRL)(&)	Manufacturer
RBR75#27400%&	2,740	1/8	L, U	T, Q, A, B	R	P	NO SOURCE
RBR75#27700%&	2,770	1/8	L, U	T, Q, A, B	R	P	NO SOURCE
RBR75#28000%&	2,800	1/8	L, U	T, Q, A, B	R	P	NO SOURCE
RBR75#28400%&	2,840	1/8	L, U	T, Q, A, B	R	P	NO SOURCE
RBR75#28700%&	2,870	1/8	L, U	T, Q, A, B	R	P	NO SOURCE
RBR75#29100%&	2,910	1/8	L, U	T, Q, A, B	R	P	NO SOURCE
RBR75#29400%&	2,940	1/8	L, U	T, Q, A, B	R	P	NO SOURCE
RBR75#29800%&	2,980	1/8	L, U	T, Q, A, B	R	P	NO SOURCE
RBR75#30100%&	3,010	1/8	L, U	T, Q, A, B	R	P	NO SOURCE
RBR75#30500%&	3,050	1/8	L, U	T, Q, A, B	R	P	NO SOURCE
RBR75#30900%&	3,090	1/8	L, U	T, Q, A, B	R	P	NO SOURCE
RBR75#31200%&	3,120	1/8	L, U	T, Q, A, B	R	P	NO SOURCE
RBR75#31600%&	3,160	1/8	L, U	T, Q, A, B	R	P	NO SOURCE
RBR75#32000%&	3,200	1/8	L, U	T, Q, A, B	R	P	NO SOURCE
	Resistance	Power	Terminal	Resistance	Level 1	Level 2	
Part Number	Value (Ohms)	Rating (W)	Characteristic (#)	Tolerance (%)	(FRL)(&)	(FRL)(&)	Manufacturer
RBR75#32400%&	3,240	1/8	L, U	T, Q, A, B	R	P	NO SOURCE
RBR75#32800%&	3,280	1/8	L, U	T, Q, A, B	R	P	NO SOURCE
RBR75#33200%&	3,320	1/8	L, U	T, Q, A, B	R	P	NO SOURCE
RBR75#33600%&	3,360	1/8	L, U	T, Q, A, B	R	P	NO SOURCE
RBR75#34000%&	3,400	1/8	L, U	T, Q, A, B	R	P	NO SOURCE
RBR75#34400%&	3,440	1/8	L, U	T, Q, A, B	R	P	NO SOURCE
RBR75#34800%&	3,480	1/8	L, U	T, Q, A, B	R	P	NO SOURCE
RBR75#35200%&	3,520	1/8	L, U	T, Q, A, B	R	P	NO SOURCE
RBR75#35700%&	3,570	1/8	L, U	T, Q, A, B	R	P	NO SOURCE
RBR75#36100%&	3,610	1/8	L, U	T, Q, A, B	R	P	NO SOURCE
RBR75#36500%&	3,650	1/8	L, U	T, Q, A, B	R	P	NO SOURCE
RBR75#37000%&	3,700	1/8	L, U	T, Q, A, B	R	P	NO SOURCE
	Resistance	Power	Terminal	Resistance	Level 1	Level 2	
Part Number	Value (Ohms)	Rating (W)	Characteristic (#)	Tolerance (%)	(FRL)(&)	(FRL)(&)	Manufacturer
RBR75#37400%&	3,740	1/8	L, U	T, Q, A, B	R	P	NO SOURCE
RBR75#37900%&	3,790	1/8	L, U	T, Q, A, B	R	P	NO SOURCE
RBR75#38300%&	3,830	1/8	L, U	T, Q, A, B	R	P	NO SOURCE
RBR75#38800%&	3,880	1/8	L, U	T, Q, A, B	R	P	NO SOURCE
RBR75#39200%&	3,920	1/8	L, U	T, Q, A, B	R	P	NO SOURCE
RBR75#39700%&	3,970	1/8	L, U	T, Q, A, B	R	P	NO SOURCE
RBR75#40200%&	4,020	1/8	L, U	T, Q, A, B	R	P	NO SOURCE

RBR75#40700%&	4,070	1/8	L, U	T, Q, A, B	R	P	NO SOURCE
RBR75#41200%&	4,120	1/8	L, U	T, Q, A, B	R	P	NO SOURCE
RBR75#41700%&	4,170	1/8	L, U	T, Q, A, B	R	P	NO SOURCE
RBR75#42200%&	4,220	1/8	L, U	T, Q, A, B	R	P	NO SOURCE
RBR75#42700%&	4,270	1/8	L, U	T, Q, A, B	R	P	NO SOURCE
RBR75#43200%&	4,320	1/8	L, U	T, Q, A, B	R	P	NO SOURCE
RBR75#43700%&	4,370	1/8	L, U	T, Q, A, B	R	P	NO SOURCE
	Resistance	Power	Terminal	Resistance	Level 1	Level 2	
Part Number	Value (Ohms)	Rating (W)	Characteristic (#)	Tolerance (%)	(FRL)(&)	(FRL)(&)	Manufacturer
RBR75#44200%&	4,420	1/8	L, U	T, Q, A, B	R	P	NO SOURCE
RBR75#44800%&	4,480	1/8	L, U	T, Q, A, B	R	P	NO SOURCE
RBR75#45300%&	4,530	1/8	L, U	T, Q, A, B	R	P	NO SOURCE
RBR75#45900%&	4,590	1/8	L, U	T, Q, A, B	R	P	NO SOURCE
RBR75#46400%&	4,640	1/8	L, U	T, Q, A, B	R	P	NO SOURCE
RBR75#47000%&	4,700	1/8	L, U	T, Q, A, B	R	P	NO SOURCE
RBR75#47500%&	4,750	1/8	L, U	T, Q, A, B	R	P	NO SOURCE
RBR75#48100%&	4,810	1/8	L, U	T, Q, A, B	R	P	NO SOURCE
RBR75#48700%&	4,870	1/8	L, U	T, Q, A, B	R	P	NO SOURCE
RBR75#49300%&	4,930	1/8	L, U	T, Q, A, B	R	P	NO SOURCE
RBR75#49900%&	4,990	1/8	L, U	T, Q, A, B	R	P	NO SOURCE
RBR75#50500%&	5,050	1/8	L, U	T, Q, A, B	R	P	NO SOURCE
RBR75#51100%&	5,110	1/8	L, U	T, Q, A, B	R	P	NO SOURCE
RBR75#51700%&	5,170	1/8	L, U	T, Q, A, B	R	P	NO SOURCE
	Resistance	Power	Terminal	Resistance	Level 1	Level 2	
Part Number	Value (Ohms)	Rating (W)	Characteristic (#)	Tolerance (%)	(FRL)(&)	(FRL)(&)	Manufacturer
RBR75#52300%&	5,230	1/8	L, U	T, Q, A, B	R	P	NO SOURCE
RBR75#53000%&	5,300	1/8	L, U	T, Q, A, B	R	P	NO SOURCE
RBR75#53600%&	5,360	1/8	L, U	T, Q, A, B	R	P	NO SOURCE
RBR75#54200%&	5,420	1/8	L, U	T, Q, A, B	R	P	NO SOURCE
RBR75#54900%&	5,490	1/8	L, U	T, Q, A, B	R	P	NO SOURCE
RBR75#55600%&	5,560	1/8	L, U	T, Q, A, B	R	P	NO SOURCE
RBR75#56200%&	5,620	1/8	L, U	T, Q, A, B	R	P	NO SOURCE
RBR75#56900%&	5,690	1/8	L, U	T, Q, A, B	R	P	NO SOURCE
RBR75#57600%&	5,760	1/8	L, U	T, Q, A, B	R	P	NO SOURCE
RBR75#58300%&	5,830	1/8	L, U	T, Q, A, B	R	P	NO SOURCE
RBR75#59000%&	5,900	1/8	L, U	T, Q, A, B	R	P	NO SOURCE
RBR75#59700%&	5,970	1/8	L, U	T, Q, A, B	R	P	NO SOURCE
RBR75#60400%&	6,040	1/8	L, U	T, Q, A, B	R	P	NO SOURCE
RBR75#61200%&	6,120	1/8	L, U	T, Q, A, B	R	P	NO SOURCE
	Resistance	Power	Terminal	Resistance	Level 1	Level 2	
Part Number	Value (Ohms)	Rating (W)	Characteristic (#)	Tolerance (%)	(FRL)(&)	(FRL)(&)	Manufacturer
RBR75#61900%&	6,190	1/8	L, U	T, Q, A, B	R	P	NO SOURCE
RBR75#62600%&	6,260	1/8	L, U	T, Q, A, B	R	P	NO SOURCE
RBR75#63400%&	6,340	1/8	L, U	T, Q, A, B	R	P	NO SOURCE
RBR75#64200%&	6,420	1/8	L, U	T, Q, A, B	R	P	NO SOURCE
RBR75#64900%&	6,490	1/8	L, U	T, Q, A, B	R	P	NO SOURCE
RBR75#65700%&	6,570	1/8	L, U	T, Q, A, B	R	P	NO SOURCE

RBR75#66500%&	6,650	1/8	L, U	T, Q, A, B	R	P	NO SOURCE
RBR75#67300%&	6,730	1/8	L, U	T, Q, A, B	R	P	NO SOURCE
RBR75#68100%&	6,810	1/8	L, U	T, Q, A, B	R	P	NO SOURCE
RBR75#69000%&	6,900	1/8	L, U	T, Q, A, B	R	P	NO SOURCE
RBR75#69800%&	6,980	1/8	L, U	T, Q, A, B	R	P	NO SOURCE
RBR75#70600%&	7,060	1/8	L, U	T, Q, A, B	R	P	NO SOURCE
RBR75#71500%&	7,150	1/8	L, U	T, Q, A, B	R	P	NO SOURCE
RBR75#72300%&	7,230	1/8	L, U	T, Q, A, B	R	P	NO SOURCE
	Resistance	Power	Terminal	Resistance	Level 1	Level 2	
Part Number	Value (Ohms)	Rating (W)	Characteristic (#)	Tolerance (%)	(FRL)(&)	(FRL)(&)	Manufacturer
RBR75#73200%&	7,320	1/8	L, U	T, Q, A, B	R	P	NO SOURCE
RBR75#74100%&	7,410	1/8	L, U	T, Q, A, B	R	P	NO SOURCE
RBR75#75000%&	7,500	1/8	L, U	T, Q, A, B	R	P	NO SOURCE
RBR75#75900%&	7,590	1/8	L, U	T, Q, A, B	R	P	NO SOURCE
RBR75#76800%&	7,680	1/8	L, U	T, Q, A, B	R	P	NO SOURCE
RBR75#77700%&	7,770	1/8	L, U	T, Q, A, B	R	P	NO SOURCE
RBR75#78700%&	7,870	1/8	L, U	T, Q, A, B	R	P	NO SOURCE
RBR75#79600%&	7,960	1/8	L, U	T, Q, A, B	R	P	NO SOURCE
RBR75#80600%&	8,060	1/8	L, U	T, Q, A, B	R	P	NO SOURCE
RBR75#81600%&	8,160	1/8	L, U	T, Q, A, B	R	P	NO SOURCE
RBR75#82500%&	8,250	1/8	L, U	T, Q, A, B	R	P	NO SOURCE
RBR75#83500%&	8,350	1/8	L, U	T, Q, A, B	R	P	NO SOURCE
	Resistance	Power	Terminal	Resistance	Level 1	Level 2	
Part Number	Value (Ohms)	Rating (W)	Characteristic (#)	Tolerance (%)	(FRL)(&)	(FRL)(&)	Manufacturer
RBR75#84500%&	8,450	1/8	L, U	T, Q, A, B	R	P	NO SOURCE
RBR75#85600%&	8,560	1/8	L, U	T, Q, A, B	R	P	NO SOURCE
RBR75#86600%&	8,660	1/8	L, U	T, Q, A, B	R	P	NO SOURCE
RBR75#87600%&	8,760	1/8	L, U	T, Q, A, B	R	P	NO SOURCE
RBR75#88700%&	8,870	1/8	L, U	T, Q, A, B	R	P	NO SOURCE
RBR75#89800%&	8,980	1/8	L, U	T, Q, A, B	R	P	NO SOURCE
RBR75#90900%&	9,090	1/8	L, U	T, Q, A, B	R	P	NO SOURCE
RBR75#92000%&	9,190	1/8	L, U	T, Q, A, B	R	P	NO SOURCE
RBR75#93100%&	9,310	1/8	L, U	T, Q, A, B	R	P	NO SOURCE
RBR75#94200%&	9,420	1/8	L, U	T, Q, A, B	R	P	NO SOURCE
RBR75#95300%&	9,530	1/8	L, U	T, Q, A, B	R	P	NO SOURCE
RBR75#96500%&	9,650	1/8	L, U	T, Q, A, B	R	P	NO SOURCE
RBR75#97600%&	9,760	1/8	L, U	T, Q, A, B	R	P	NO SOURCE
RBR75#98800%&	9,880	1/8	L, U	T, Q, A, B	R	P	NO SOURCE
	Resistance	Power	Terminal	Resistance	Level 1	Level 2	
Part Number	Value (Ohms)	Rating (W)	Characteristic (#)	Tolerance (%)	(FRL)(&)	(FRL)(&)	Manufacturer

RBR75 Wirewound Resistors: 10,000 Ohms through 98,800 Ohms

	Resistance	Power	Terminal	Resistance	Level 1	Level 2	
Part Number	Value (Ohms)	Rating (W)	Characteristic (#)	Tolerance (%)	(FRL)(&)	(FRL)(&)	Manufacturer

RBR75#10001%&	10,000	1/8	L, U	T, Q, A, B	R	P	NO SOURCE
RBR75#10101%&	10,100	1/8	L, U	T, Q, A, B	R	P	NO SOURCE
RBR75#10201%&	10,200	1/8	L, U	T, Q, A, B	R	P	NO SOURCE
RBR75#10401%&	10,400	1/8	L, U	T, Q, A, B	R	P	NO SOURCE
RBR75#10501%&	10,500	1/8	L, U	T, Q, A, B	R	P	NO SOURCE
RBR75#10601%&	10,600	1/8	L, U	T, Q, A, B	R	P	NO SOURCE
RBR75#10701%&	10,700	1/8	L, U	T, Q, A, B	R	P	NO SOURCE
RBR75#10901%&	10,900	1/8	L, U	T, Q, A, B	R	P	NO SOURCE
RBR75#11001%&	11,000	1/8	L, U	T, Q, A, B	R	P	NO SOURCE
RBR75#11101%&	11,100	1/8	L, U	T, Q, A, B	R	P	NO SOURCE
RBR75#11301%&	11,300	1/8	L, U	T, Q, A, B	R	P	NO SOURCE
RBR75#11401%&	11,400	1/8	L, U	T, Q, A, B	R	P	NO SOURCE
RBR75#11501%&	11,500	1/8	L, U	T, Q, A, B	R	P	NO SOURCE
RBR75#11701%&	11,700	1/8	L, U	T, Q, A, B	R	P	NO SOURCE
	Resistance	Power	Terminal	Resistance	Level 1	Level 2	
Part Number	Value (Ohms)	Rating (W)	Characteristic (#)	Tolerance (%)	(FRL)(&)	(FRL)(&)	Manufacturer
RBR75#11801%&	11,800	1/8	L, U	T, Q, A, B	R	P	NO SOURCE
RBR75#12001%&	12,000	1/8	L, U	T, Q, A, B	R	P	NO SOURCE
RBR75#12101%&	12,100	1/8	L, U	T, Q, A, B	R	P	NO SOURCE
RBR75#12301%&	12,300	1/8	L, U	T, Q, A, B	R	P	NO SOURCE
RBR75#12401%&	12,400	1/8	L, U	T, Q, A, B	R	P	NO SOURCE
RBR75#12601%&	12,600	1/8	L, U	T, Q, A, B	R	P	NO SOURCE
RBR75#12701%&	12,700	1/8	L, U	T, Q, A, B	R	P	NO SOURCE
RBR75#12901%&	12,900	1/8	L, U	T, Q, A, B	R	P	NO SOURCE
RBR75#13001%&	13,000	1/8	L, U	T, Q, A, B	R	P	NO SOURCE
RBR75#13201%&	13,200	1/8	L, U	T, Q, A, B	R	P	NO SOURCE
RBR75#13301%&	13,300	1/8	L, U	T, Q, A, B	R	P	NO SOURCE
RBR75#13501%&	13,500	1/8	L, U	T, Q, A, B	R	P	NO SOURCE
RBR75#13701%&	13,700	1/8	L, U	T, Q, A, B	R	P	NO SOURCE
RBR75#13801%&	13,800	1/8	L, U	T, Q, A, B	R	P	NO SOURCE
	Resistance	Power	Terminal	Resistance	Level 1	Level 2	
Part Number	Value (Ohms)	Rating (W)	Characteristic (#)	Tolerance (%)	(FRL)(&)	(FRL)(&)	Manufacturer
RBR75#14001%&	14,000	1/8	L, U	T, Q, A, B	R	P	NO SOURCE
RBR75#14201%&	14,200	1/8	L, U	T, Q, A, B	R	P	NO SOURCE
RBR75#14301%&	14,300	1/8	L, U	T, Q, A, B	R	P	NO SOURCE
RBR75#14501%&	14,500	1/8	L, U	T, Q, A, B	R	P	NO SOURCE
RBR75#14701%&	14,700	1/8	L, U	T, Q, A, B	R	P	NO SOURCE
RBR75#14901%&	14,900	1/8	L, U	T, Q, A, B	R	P	NO SOURCE
RBR75#15001%&	15,000	1/8	L, U	T, Q, A, B	R	P	NO SOURCE
RBR75#15201%&	15,200	1/8	L, U	T, Q, A, B	R	P	NO SOURCE
RBR75#15401%&	15,400	1/8	L, U	T, Q, A, B	R	P	NO SOURCE
RBR75#15601%&	15,600	1/8	L, U	T, Q, A, B	R	P	NO SOURCE
RBR75#15801%&	15,800	1/8	L, U	T, Q, A, B	R	P	NO SOURCE
RBR75#16001%&	16,000	1/8	L, U	T, Q, A, B	R	P	NO SOURCE
RBR75#16201%&	16,200	1/8	L, U	T, Q, A, B	R	P	NO SOURCE
RBR75#16401%&	16,400	1/8	L, U	T, Q, A, B	R	P	NO SOURCE
	Resistance	Power	Terminal	Resistance	Level 1	Level 2	

Part Number	Value (Ohms)	Rating (W)	Characteristic (#)	Tolerance (%)	(FRL)(&)	(FRL)(&)	Manufacturer
RBR75#16501%&	16,500	1/8	L, U	T, Q, A, B	R	P	NO SOURCE
RBR75#16701%&	16,700	1/8	L, U	T, Q, A, B	R	P	NO SOURCE
RBR75#16901%&	16,900	1/8	L, U	T, Q, A, B	R	P	NO SOURCE
RBR75#17201%&	17,200	1/8	L, U	T, Q, A, B	R	P	NO SOURCE
RBR75#17401%&	17,400	1/8	L, U	T, Q, A, B	R	P	NO SOURCE
RBR75#17601%&	17,600	1/8	L, U	T, Q, A, B	R	P	NO SOURCE
RBR75#17801%&	17,800	1/8	L, U	T, Q, A, B	R	P	NO SOURCE
RBR75#18001%&	18,000	1/8	L, U	T, Q, A, B	R	P	NO SOURCE
RBR75#18201%&	18,200	1/8	L, U	T, Q, A, B	R	P	NO SOURCE
RBR75#18401%&	18,400	1/8	L, U	T, Q, A, B	R	P	NO SOURCE
RBR75#18701%&	18,700	1/8	L, U	T, Q, A, B	R	P	NO SOURCE
RBR75#18901%&	18,900	1/8	L, U	T, Q, A, B	R	P	NO SOURCE
RBR75#19101%&	19,100	1/8	L, U	T, Q, A, B	R	P	NO SOURCE
RBR75#19301%&	19,300	1/8	L, U	T, Q, A, B	R	P	NO SOURCE
	Resistance	Power	Terminal	Resistance	Level 1	Level 2	
Part Number	Value (Ohms)	Rating (W)	Characteristic (#)	Tolerance (%)	(FRL)(&)	(FRL)(&)	Manufacturer
RBR75#19601%&	19,600	1/8	L, U	T, Q, A, B	R	P	NO SOURCE
RBR75#19801%&	19,800	1/8	L, U	T, Q, A, B	R	P	NO SOURCE
RBR75#20001%&	20,000	1/8	L, U	T, Q, A, B	R	P	NO SOURCE
RBR75#20301%&	20,300	1/8	L, U	T, Q, A, B	R	P	NO SOURCE
RBR75#20501%&	20,500	1/8	L, U	T, Q, A, B	R	P	NO SOURCE
RBR75#20801%&	20,800	1/8	L, U	T, Q, A, B	R	P	NO SOURCE
RBR75#21001%&	21,000	1/8	L, U	T, Q, A, B	R	P	NO SOURCE
RBR75#21301%&	21,300	1/8	L, U	T, Q, A, B	R	P	NO SOURCE
RBR75#21501%&	21,500	1/8	L, U	T, Q, A, B	R	P	NO SOURCE
RBR75#21801%&	21,800	1/8	L, U	T, Q, A, B	R	P	NO SOURCE
RBR75#22101%&	22,100	1/8	L, U	T, Q, A, B	R	P	NO SOURCE
RBR75#22301%&	22,300	1/8	L, U	T, Q, A, B	R	P	NO SOURCE
RBR75#22601%&	22,600	1/8	L, U	T, Q, A, B	R	P	NO SOURCE
RBR75#22901%&	22,900	1/8	L, U	T, Q, A, B	R	P	NO SOURCE
	Resistance	Power	Terminal	Resistance	Level 1	Level 2	
Part Number	Value (Ohms)	Rating (W)	Characteristic (#)	Tolerance (%)	(FRL)(&)	(FRL)(&)	Manufacturer
RBR75#23201%&	23,200	1/8	L, U	T, Q, A, B	R	P	NO SOURCE
RBR75#23401%&	23,400	1/8	L, U	T, Q, A, B	R	P	NO SOURCE
RBR75#23701%&	23,700	1/8	L, U	T, Q, A, B	R	P	NO SOURCE
RBR75#24001%&	24,000	1/8	L, U	T, Q, A, B	R	P	NO SOURCE
RBR75#24301%&	24,300	1/8	L, U	T, Q, A, B	R	P	NO SOURCE
RBR75#24601%&	24,600	1/8	L, U	T, Q, A, B	R	P	NO SOURCE
RBR75#24901%&	24,900	1/8	L, U	T, Q, A, B	R	P	NO SOURCE
RBR75#25201%&	25,200	1/8	L, U	T, Q, A, B	R	P	NO SOURCE
RBR75#25501%&	25,500	1/8	L, U	T, Q, A, B	R	P	NO SOURCE
RBR75#25801%&	25,800	1/8	L, U	T, Q, A, B	R	P	NO SOURCE
RBR75#26101%&	26,100	1/8	L, U	T, Q, A, B	R	P	NO SOURCE
RBR75#26401%&	26,400	1/8	L, U	T, Q, A, B	R	P	NO SOURCE
RBR75#26701%&	26,700	1/8	L, U	T, Q, A, B	R	P	NO SOURCE
RBR75#27101%&	27,100	1/8	L, U	T, Q, A, B	R	P	NO SOURCE

	Resistance	Power	Terminal	Resistance	Level 1	Level 2	
Part Number	Value (Ohms)	Rating (W)	Characteristic (#)	Tolerance (%)	(FRL)(&)	(FRL)(&)	Manufacturer
RBR75#27401%&	27,400	1/8	L, U	T, Q, A, B	R	P	NO SOURCE
RBR75#27701%&	27,700	1/8	L, U	T, Q, A, B	R	P	NO SOURCE
RBR75#28001%&	28,000	1/8	L, U	T, Q, A, B	R	P	NO SOURCE
RBR75#28401%&	28,400	1/8	L, U	T, Q, A, B	R	P	NO SOURCE
RBR75#28701%&	28,700	1/8	L, U	T, Q, A, B	R	P	NO SOURCE
RBR75#29101%&	29,100	1/8	L, U	T, Q, A, B	R	P	NO SOURCE
RBR75#29401%&	29,400	1/8	L, U	T, Q, A, B	R	P	NO SOURCE
RBR75#29801%&	29,800	1/8	L, U	T, Q, A, B	R	P	NO SOURCE
RBR75#30101%&	30,100	1/8	L, U	T, Q, A, B	R	P	NO SOURCE
RBR75#30501%&	30,500	1/8	L, U	T, Q, A, B	R	P	NO SOURCE
RBR75#30901%&	30,900	1/8	L, U	T, Q, A, B	R	P	NO SOURCE
RBR75#31201%&	31,200	1/8	L, U	T, Q, A, B	R	P	NO SOURCE
RBR75#31601%&	31,600	1/8	L, U	T, Q, A, B	R	P	NO SOURCE
RBR75#32001%&	32,000	1/8	L, U	T, Q, A, B	R	P	NO SOURCE
	Resistance	Power	Terminal	Resistance	Level 1	Level 2	
Part Number	Value (Ohms)	Rating (W)	Characteristic (#)	Tolerance (%)	(FRL)(&)	(FRL)(&)	Manufacturer
RBR75#32401%&	32,400	1/8	L, U	T, Q, A, B	R	P	NO SOURCE
RBR75#32801%&	32,800	1/8	L, U	T, Q, A, B		P	NO SOURCE
RBR75#33201%&	33,200	1/8	L, U	T, Q, A, B		P	NO SOURCE
RBR75#33601%&	33,600	1/8	L, U	T, Q, A, B		P	NO SOURCE
RBR75#34001%&	34,000	1/8	L, U	T, Q, A, B		P	NO SOURCE
RBR75#34401%&	34,400	1/8	L, U	T, Q, A, B		P	NO SOURCE
RBR75#34801%&	34,800	1/8	L, U	T, Q, A, B		P	NO SOURCE
RBR75#35201%&	35,200	1/8	L, U	T, Q, A, B		P	NO SOURCE
RBR75#35701%&	35,700	1/8	L, U	T, Q, A, B		P	NO SOURCE
RBR75#36101%&	36,100	1/8	L, U	T, Q, A, B		P	NO SOURCE
RBR75#36501%&	36,500	1/8	L, U	T, Q, A, B		P	NO SOURCE
RBR75#37001%&	37,000	1/8	L, U	T, Q, A, B		P	NO SOURCE
RBR75#37401%&	37,400	1/8	L, U	T, Q, A, B		P	NO SOURCE
RBR75#37901%&	37,900	1/8	L, U	T, Q, A, B		P	NO SOURCE
	Resistance	Power	Terminal	Resistance	Level 1	Level 2	
Part Number	Value (Ohms)	Rating (W)	Characteristic (#)	Tolerance (%)	(FRL)(&)	(FRL)(&)	Manufacturer
RBR75#38301%&	38,300	1/8	L, U	T, Q, A, B		P	NO SOURCE
RBR75#38801%&	38,800	1/8	L, U	T, Q, A, B		P	NO SOURCE
RBR75#39201%&	39,200	1/8	L, U	T, Q, A, B		P	NO SOURCE
RBR75#39701%&	39,700	1/8	L, U	T, Q, A, B		P	NO SOURCE
RBR75#40201%&	40,200	1/8	L, U	T, Q, A, B		P	NO SOURCE
RBR75#40701%&	40,700	1/8	L, U	T, Q, A, B		P	NO SOURCE
RBR75#41201%&	41,200	1/8	L, U	T, Q, A, B		P	NO SOURCE
RBR75#41701%&	41,700	1/8	L, U	T, Q, A, B		P	NO SOURCE
RBR75#42201%&	42,200	1/8	L, U	T, Q, A, B		P	NO SOURCE
RBR75#42701%&	42,700	1/8	L, U	T, Q, A, B		P	NO SOURCE
RBR75#43201%&	43,200	1/8	L, U	T, Q, A, B		P	NO SOURCE
RBR75#43701%&	43,700	1/8	L, U	T, Q, A, B		P	NO SOURCE
RBR75#44201%&	44,200	1/8	L, U	T, Q, A, B		P	NO SOURCE

RBR75#44801%&	44,800	1/8	L, U	T, Q, A, B		P	NO SOURCE
	Resistance	Power	Terminal	Resistance	Level 1	Level 2	
Part Number	Value (Ohms)	Rating (W)	Characteristic (#)	Tolerance (%)	(FRL)(&)	(FRL)(&)	Manufacturer
RBR75#45301%&	45,300	1/8	L, U	T, Q, A, B		P	NO SOURCE
RBR75#45901%&	45,900	1/8	L, U	T, Q, A, B		P	NO SOURCE
RBR75#46401%&	46,400	1/8	L, U	T, Q, A, B		P	NO SOURCE
RBR75#47001%&	47,000	1/8	L, U	T, Q, A, B		P	NO SOURCE
RBR75#47501%&	47,500	1/8	L, U	T, Q, A, B		P	NO SOURCE
RBR75#48101%&	48,100	1/8	L, U	T, Q, A, B		P	NO SOURCE
RBR75#48701%&	48,700	1/8	L, U	T, Q, A, B		P	NO SOURCE
RBR75#49301%&	49,300	1/8	L, U	T, Q, A, B		P	NO SOURCE
RBR75#49901%&	49,900	1/8	L, U	T, Q, A, B		P	NO SOURCE
RBR75#50501%&	50,500	1/8	L, U	T, Q, A, B		P	NO SOURCE
RBR75#51101%&	51,100	1/8	L, U	T, Q, A, B		P	NO SOURCE
RBR75#51701%&	51,700	1/8	L, U	T, Q, A, B		P	NO SOURCE
RBR75#52301%&	52,300	1/8	L, U	T, Q, A, B		P	NO SOURCE
RBR75#53001%&	53,000	1/8	L, U	T, Q, A, B		P	NO SOURCE
	Resistance	Power	Terminal	Resistance	Level 1	Level 2	
Part Number	Value (Ohms)	Rating (W)	Characteristic (#)	Tolerance (%)	(FRL)(&)	(FRL)(&)	Manufacturer
RBR75#53601%&	53,600	1/8	L, U	T, Q, A, B		P	NO SOURCE
RBR75#54201%&	54,200	1/8	L, U	T, Q, A, B		P	NO SOURCE
RBR75#54901%&	54,900	1/8	L, U	T, Q, A, B		P	NO SOURCE
RBR75#55601%&	55,600	1/8	L, U	T, Q, A, B		P	NO SOURCE
RBR75#56201%&	56,200	1/8	L, U	T, Q, A, B		P	NO SOURCE
RBR75#56901%&	56,900	1/8	L, U	T, Q, A, B		P	NO SOURCE
RBR75#57601%&	57,600	1/8	L, U	T, Q, A, B		P	NO SOURCE
RBR75#58301%&	58,300	1/8	L, U	T, Q, A, B		P	NO SOURCE
RBR75#59001%&	59,000	1/8	L, U	T, Q, A, B		P	NO SOURCE
RBR75#59701%&	59,700	1/8	L, U	T, Q, A, B		P	NO SOURCE
RBR75#60401%&	60,400	1/8	L, U	T, Q, A, B		P	NO SOURCE
RBR75#61201%&	61,200	1/8	L, U	T, Q, A, B		P	NO SOURCE
RBR75#61901%&	61,900	1/8	L, U	T, Q, A, B		P	NO SOURCE
RBR75#62601%&	62,600	1/8	L, U	T, Q, A, B		P	NO SOURCE
	Resistance	Power	Terminal	Resistance	Level 1	Level 2	
Part Number	Value (Ohms)	Rating (W)	Characteristic (#)	Tolerance (%)	(FRL)(&)	(FRL)(&)	Manufacturer
RBR75#63401%&	63,400	1/8	L, U	T, Q, A, B		P	NO SOURCE
RBR75#64201%&	64,200	1/8	L, U	T, Q, A, B		P	NO SOURCE
RBR75#64901%&	64,900	1/8	L, U	T, Q, A, B		P	NO SOURCE
RBR75#65701%&	65,700	1/8	L, U	T, Q, A, B		P	NO SOURCE
RBR75#66501%&	66,500	1/8	L, U	T, Q, A, B		P	NO SOURCE
RBR75#67301%&	67,300	1/8	L, U	T, Q, A, B		P	NO SOURCE
RBR75#68101%&	68,100	1/8	L, U	T, Q, A, B		P	NO SOURCE
RBR75#69001%&	69,000	1/8	L, U	T, Q, A, B		P	NO SOURCE
RBR75#69801%&	69,800	1/8	L, U	T, Q, A, B		P	NO SOURCE
RBR75#70601%&	70,600	1/8	L, U	T, Q, A, B		P	NO SOURCE
RBR75#71501%&	71,500	1/8	L, U	T, Q, A, B		P	NO SOURCE
RBR75#72301%&	72,300	1/8	L, U	T, Q, A, B		P	NO SOURCE

RBR75#73201%&	73,200	1/8	L, U	T, Q, A, B		P	NO SOURCE
RBR75#74101%&	74,100	1/8	L, U	T, Q, A, B		P	NO SOURCE
	Resistance	Power	Terminal	Resistance	Level 1	Level 2	
Part Number	Value (Ohms)	Rating (W)	Characteristic (#)	Tolerance (%)	(FRL)(&)	(FRL)(&)	Manufacturer
RBR75#75001%&	75,000	1/8	L, U	T, Q, A, B		P	NO SOURCE
RBR75#75901%&	75,900	1/8	L, U	T, Q, A, B		P	NO SOURCE
RBR75#76802%&	76,800	1/8	L, U	T, Q, A, B		P	NO SOURCE
RBR75#77702%&	77,700	1/8	L, U	T, Q, A, B		P	NO SOURCE
RBR75#78702%&	78,700	1/8	L, U	T, Q, A, B		P	NO SOURCE
RBR75#79602%&	79,600	1/8	L, U	T, Q, A, B		P	NO SOURCE
RBR75#80602%&	80,600	1/8	L, U	T, Q, A, B		P	NO SOURCE
RBR75#81602%&	81,600	1/8	L, U	T, Q, A, B		P	NO SOURCE
RBR75#82502%&	82,500	1/8	L, U	T, Q, A, B		P	NO SOURCE
RBR75#83502%&	83,500	1/8	L, U	T, Q, A, B		P	NO SOURCE
RBR75#84502%&	84,500	1/8	L, U	T, Q, A, B		P	NO SOURCE
RBR75#85602%&	85,600	1/8	L, U	T, Q, A, B		P	NO SOURCE
RBR75#86602%&	86,600	1/8	L, U	T, Q, A, B		P	NO SOURCE
RBR75#87602%&	87,600	1/8	L, U	T, Q, A, B		P	NO SOURCE
	Resistance	Power	Terminal	Resistance	Level 1	Level 2	
Part Number	Value (Ohms)	Rating (W)	Characteristic (#)	Tolerance (%)	(FRL)(&)	(FRL)(&)	Manufacturer
RBR75#88702%&	88,700	1/8	L, U	T, Q, A, B		P	NO SOURCE
RBR75#89802%&	89,800	1/8	L, U	T, Q, A, B		P	NO SOURCE
RBR75#90902%&	90,900	1/8	L, U	T, Q, A, B		P	NO SOURCE
RBR75#92002%&	92,000	1/8	L, U	T, Q, A, B		P	NO SOURCE
RBR75#93102%&	93,100	1/8	L, U	T, Q, A, B		P	NO SOURCE
RBR75#94202%&	94,200	1/8	L, U	T, Q, A, B		P	NO SOURCE
RBR75#95302%&	95,300	1/8	L, U	T, Q, A, B		P	NO SOURCE
RBR75#96502%&	96,500	1/8	L, U	T, Q, A, B		P	NO SOURCE
RBR75#97602%&	97,600	1/8	L, U	T, Q, A, B		P	NO SOURCE
RBR75#98802%&	98,800	1/8	L, U	T, Q, A, B		P	NO SOURCE
	Resistance	Power	Terminal	Resistance	Level 1	Level 2	
Part Number	Value (Ohms)	Rating (W)	Characteristic (#)	Tolerance (%)	(FRL)(&)	(FRL)(&)	Manufacturer

RBR75 Wirewound Resistors: 100,000 Ohms through 150,000 Ohms

	Resistance	Power	Terminal	Resistance	Level 1	Level 2	
Part Number	Value (Ohms)	Rating (W)	Characteristic (#)	Tolerance (%)	(FRL)(&)	(FRL)(&)	Manufacturer
RBR75#10002%&	100,000	1/8	L, U	T, Q, A, B		P	NO SOURCE
RBR75#10102%&	101,000	1/8	L, U	T, Q, A, B		P	NO SOURCE
RBR75#10202%&	102,000	1/8	L, U	T, Q, A, B		P	NO SOURCE
RBR75#10402%&	104,000	1/8	L, U	T, Q, A, B		P	NO SOURCE
RBR75#10502%&	105,000	1/8	L, U	T, Q, A, B		P	NO SOURCE
RBR75#10602%&	106,000	1/8	L, U	T, Q, A, B		P	NO SOURCE
RBR75#10702%&	107,000	1/8	L, U	T, Q, A, B		P	NO SOURCE
RBR75#10902%&	109,000	1/8	L, U	T, Q, A, B		P	NO SOURCE

RBR75#11002%&	110,000	1/8	L, U	T, Q, A, B		P	NO SOURCE
RBR75#11102%&	111,000	1/8	L, U	T, Q, A, B		P	NO SOURCE
RBR75#11302%&	113,000	1/8	L, U	T, Q, A, B		P	NO SOURCE
RBR75#11402%&	114,000	1/8	L, U	T, Q, A, B		P	NO SOURCE
RBR75#11502%&	115,000	1/8	L, U	T, Q, A, B		P	NO SOURCE
RBR75#11702%&	117,000	1/8	L, U	T, Q, A, B		P	NO SOURCE
	Resistance	Power	Terminal	Resistance	Level 1	Level 2	
Part Number	Value (Ohms)	Rating (W)	Characteristic (#)	Tolerance (%)	(FRL)(&)	(FRL)(&)	Manufacturer
RBR75#11802%&	118,000	1/8	L, U	T, Q, A, B		P	NO SOURCE
RBR75#12002%&	120,000	1/8	L, U	T, Q, A, B		P	NO SOURCE
RBR75#12102%&	121,000	1/8	L, U	T, Q, A, B		P	NO SOURCE
RBR75#12302%&	123,000	1/8	L, U	T, Q, A, B		P	NO SOURCE
RBR75#12402%&	124,000	1/8	L, U	T, Q, A, B		P	NO SOURCE
RBR75#12602%&	126,000	1/8	L, U	T, Q, A, B		P	NO SOURCE
RBR75#12702%&	127,000	1/8	L, U	T, Q, A, B		P	NO SOURCE
RBR75#12902%&	129,000	1/8	L, U	T, Q, A, B		P	NO SOURCE
RBR75#13002%&	130,000	1/8	L, U	T, Q, A, B		P	NO SOURCE
RBR75#13202%&	132,000	1/8	L, U	T, Q, A, B		P	NO SOURCE
RBR75#13302%&	133,000	1/8	L, U	T, Q, A, B		P	NO SOURCE
RBR75#13502%&	135,000	1/8	L, U	T, Q, A, B		P	NO SOURCE
RBR75#13702%&	137,000	1/8	L, U	T, Q, A, B		P	NO SOURCE
RBR75#13802%&	138,000	1/8	L, U	T, Q, A, B		P	NO SOURCE
	Resistance	Power	Terminal	Resistance	Level 1	Level 2	
Part Number	Value (Ohms)	Rating (W)	Characteristic (#)	Tolerance (%)	(FRL)(&)	(FRL)(&)	Manufacturer
RBR75#14002%&	140,000	1/8	L, U	T, Q, A, B		P	NO SOURCE
RBR75#14202%&	142,000	1/8	L, U	T, Q, A, B		P	NO SOURCE
RBR75#14302%&	143,000	1/8	L, U	T, Q, A, B		P	NO SOURCE
RBR75#14502%&	145,000	1/8	L, U	T, Q, A, B		P	NO SOURCE
RBR75#14702%&	147,000	1/8	L, U	T, Q, A, B		P	NO SOURCE
RBR75#14902%&	149,000	1/8	L, U	T, Q, A, B		P	NO SOURCE
RBR75#15002%&	150,000	1/8	L, U	T, Q, A, B		P	NO SOURCE
	Resistance	Power	Terminal	Resistance	Level 1	Level 2	
Part Number	Value (Ohms)	Rating (W)	Characteristic (#)	Tolerance (%)	(FRL)(&)	(FRL)(&)	Manufacturer

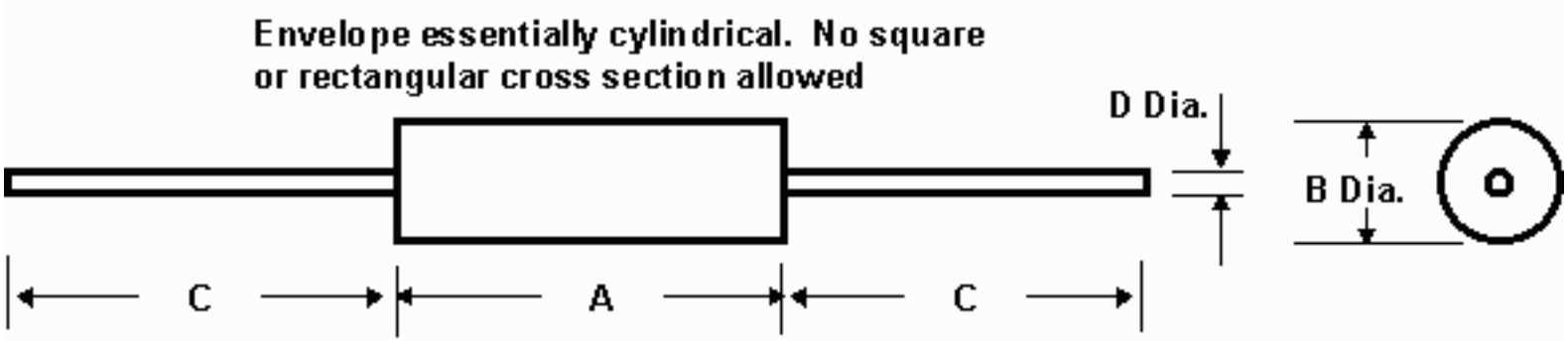

Physical Dimensions Table

Resistor Style	A	B	C (min)	D
RBR52	1.000 + 0.020, -0.032	0.375 +/- 0.015	1.500	0.032 +/- 0.002
RBR54	0.750 + 0.020, -0.032	0.250 +/- 0.015	1.500	0.032 +/- 0.002
RBR56	0.344 + 0.020, -0.032	0.085 +/- 0.015	1.500	0.032 +/- 0.002
RBR57	1.000 + 0.020, -0.032	0.500 +/- 0.015	1.500	0.032 +/- 0.002
RBR74	0.500 +/- 0.020	0.193 +/- 0.010	1.500	0.025 +/- 0.002
RBR75	0.295 + 0.020, -0.032	0.250 +/- 0.015	1.500	0.025 +/- 0.002
Click Here to See RBR71				

NOTES:

1. Dimensions are in inches.

2. Lead concentric tolerance is to be measured at the point of lead egress from the resistor body. It shall be within 0.016 TIR for RBR74 and 0.032 TIR for RBR52, RBR54, RBR56, RBR57 and RBR75.

3. Dimension A is "clean lead" to "clean lead".

APPLICATION NOTES FOR MIL-PRF-39007

1) The maximum resistance value of preferred wirewound resistors is constrained by the size of the wire used in their construction. Wire size of less than 0.001 inch (0.03 mm) in nominal diameter is not recommended for NASA use.

2) Space Level Product: MIL-PRF-39007 includes a Space Level Quality option designated by the letter "T" in the failure rate level character of the part number. "T" level product receives additional screening and inspection at the manufacturer prior to delivery. This inspection includes additional testing beyond the basic requirements, specifically

Thermal Shock

Short-time Overload

Dielectric Withstanding Voltage

Radiographic Inspection

Lot Sample Destructive Physical Analysis

In addition, suppliers are required to maintain "S" failure rate level, qualify product through 100 thermal cycles and certify that their product meets the outgassing requirements of NASA Publication 1124. Consult with the supplier to determine their current "T" level qualification status.

Part Number Ordering Information, example and explanation:

RWR78S1002FS where,

RWR	78	S	1002	F
Style (Fixed, Wirewound, (Power Type), Established Reliability Resistors Conforming to MIL-PRF-39007)	Shape, Dimensions, Power Rating of the Resistor	Terminal Characteristics	Resistance Value (Ohms)	Res

Part number ordering options are developed using the following criteria:

Style	Detail Specification
RWR78	MIL-PRF-39007/7
RWR80	MIL-PRF-39007/8
RWR81	MIL-PRF-39007/9
RWR84	MIL-PRF-39007/10
RWR89	MIL-PRF-39007/11

Terminal Characteristics
W = Weldable, Inductively Wound
S = Solderable, Inductively Wound
N = Solderable, Noninductively Wound
Z = Weldable, Noniductively Wound

Resistance Tolerance
B = +/- 0.1 %
D = +/- 0.5 %
F = +/- 1%

Failure Rate Level
P = 0.1%/1000 hrs (Level 2)
R = 0.01%/1000 hrs (Level 2)
S = 0.001%/1000 hrs (Level 1)
T = Space Level (See Application Notes)

Resistance Values:

Resistance values in ohms are contained in the following listing. When ordering, the first three digits represent significant figures and the last digit specifies the number of zeroes to follow. For example 1001 indicates 1,000 ohms and 1002 indicates 10,000 ohms. For values less than or equal to 100 ohms the letter "R" is used to indicate a decimal point. For example 10R0 indicates 10.0 ohms.

Revision History for MIL-PRF-39007 Listing in the NPSL

03/10/98	Corrected parts listing tables to fix error in the available "decade" values. Errors existed for all decade values from 767 through 976.
03/04/98	Added dimensional drawings to this section
11/28/97	Made changes indicating the specification conversion to a performance specification (MIL-PRF-39007 instead of MIL-R-39007)
07/01/97	Initial Release of MIL-R-39007 Section in the NPSL

Go to -

NEPP

|

NPSL

|

Resistors

MIL-PRF-39007, RESISTORS

Fixed, Resistor, Wirewound, (Power Type), Established Reliability

RWR Styles

Part Number/Ordering Explanation

Important! Application Notes

Revision History for MIL-PRF-39007 Listing in the NPSL

Last Revision: 03/10/98

Click on the link below to see the associated parts selection listing:

Style	Detail Specification	Description (Length x Diameter) [Click the Link Below for Dimensional Drawing]
RWR78	MIL-PRF-39007/7	10 Watt, Tubular, Axial Lead (1.780" x 0.375") 0.1 ohms to 39.2 kohms
RWR80	MIL-PRF-39007/8	2 Watt, Tubular, Axial Lead (0.406" x 0.094") 0.1 ohms to 1.21 kohms
RWR81	MIL-PRF-39007/9	1 Watt, Tubular, Axial Lead (0.250" x 0.085") 0.1 ohms to 493 ohms
RWR84	MIL-PRF-39007/10	7 Watt, Tubular, Axial Lead (0.875" x 0.312") 0.1 ohms to 12.4 kohms
RWR89	MIL-PRF-39007/11	3 Watt, Tubular, Axial Lead (0.560" x 0.187") 0.1 ohms to 3.57 kohms

RWR78 Wirewound Resistors

Part Number	Resistance Value (Ohms)	Power Rating (W)	Terminal Characteristic (#)	Resistance Tolerance (%)	Level 1 (FRL)(&)	Level 2 (FRL)(&)	Manufacturer
RWR78#R100%&	0.100	10	S, W, N, Z	B, D, F	S	P, R	DAL, SHA, TEP
RWR78#R101%&	0.101	10	S, W, N, Z	B, D	S	P, R	DAL, SHA, TEP
RWR78#R102%&	0.102	10	S, W, N, Z	B, D, F	S	P, R	DAL, SHA, TEP
RWR78#R104%&	0.104	10	S, W, N, Z	B, D	S	P, R	DAL, SHA, TEP
RWR78#R105%&	0.105	10	S, W, N, Z	B, D, F	S	P, R	DAL, SHA, TEP
RWR78#R106%&	0.106	10	S, W, N, Z	B, D	S	P, R	DAL, SHA, TEP
RWR78#R107%&	0.107	10	S, W, N, Z	B, D, F	S	P, R	DAL, SHA, TEP
RWR78#R109%&	0.109	10	S, W, N, Z	B, D	S	P, R	DAL, SHA, TEP
RWR78#R110%&	0.110	10	S, W, N, Z	B, D, F	S	P, R	DAL, SHA, TEP
RWR78#R111%&	0.111	10	S, W, N, Z	B, D	S	P, R	DAL, SHA, TEP
RWR78#R113%&	0.113	10	S, W, N, Z	B, D, F	S	P, R	DAL, SHA, TEP
RWR78#R114%&	0.114	10	S, W, N, Z	B, D	S	P, R	DAL, SHA, TEP
RWR78#R115%&	0.115	10	S, W, N, Z	B, D, F	S	P, R	DAL, SHA, TEP
RWR78#R117%&	0.117	10	S, W, N, Z	B, D	S	P, R	DAL, SHA, TEP
RWR78#R118%&	0.118	10	S, W, N, Z	B, D, F	S	P, R	DAL, SHA, TEP
RWR78#R120%&	0.120	10	S, W, N, Z	B, D	S	P, R	DAL, SHA, TEP
RWR78#R121%&	0.121	10	S, W, N, Z	B, D, F	S	P, R	DAL, SHA, TEP

RWR78#R123%&	0.123	10	S, W, N, Z	B, D	S	P, R	DAL, SHA, TEP
RWR78#R124%&	0.124	10	S, W, N, Z	B, D, F	S	P, R	DAL, SHA, TEP
RWR78#R126%&	0.126	10	S, W, N, Z	B, D	S	P, R	DAL, SHA, TEP
RWR78#R127%&	0.127	10	S, W, N, Z	B, D, F	S	P, R	DAL, SHA, TEP
RWR78#R129%&	0.129	10	S, W, N, Z	B, D	S	P, R	DAL, SHA, TEP
RWR78#R130%&	0.130	10	S, W, N, Z	B, D, F	S	P, R	DAL, SHA, TEP
RWR78#R132%&	0.132	10	S, W, N, Z	B, D	S	P, R	DAL, SHA, TEP
RWR78#R133%&	0.133	10	S, W, N, Z	B, D, F	S	P, R	DAL, SHA, TEP
RWR78#R135%&	0.135	10	S, W, N, Z	B, D	S	P, R	DAL, SHA, TEP
RWR78#R137%&	0.137	10	S, W, N, Z	B, D, F	S	P, R	DAL, SHA, TEP
RWR78#R138%&	0.138	10	S, W, N, Z	B, D	S	P, R	DAL, SHA, TEP
RWR78#R140%&	0.140	10	S, W, N, Z	B, D, F	S	P, R	DAL, SHA, TEP
RWR78#R142%&	0.142	10	S, W, N, Z	B, D	S	P, R	DAL, SHA, TEP
RWR78#R143%&	0.143	10	S, W, N, Z	B, D, F	S	P, R	DAL, SHA, TEP
RWR78#R145%&	0.145	10	S, W, N, Z	B, D	S	P, R	DAL, SHA, TEP
RWR78#R147%&	0.147	10	S, W, N, Z	B, D, F	S	P, R	DAL, SHA, TEP
RWR78#R149%&	0.149	10	S, W, N, Z	B, D	S	P, R	DAL, SHA, TEP
RWR78#R150%&	0.150	10	S, W, N, Z	B, D, F	S	P, R	DAL, SHA, TEP
RWR78#R152%&	0.152	10	S, W, N, Z	B, D	S	P, R	DAL, SHA, TEP
RWR78#R154%&	0.154	10	S, W, N, Z	B, D, F	S	P, R	DAL, SHA, TEP
RWR78#R156%&	0.156	10	S, W, N, Z	B, D	S	P, R	DAL, SHA, TEP
RWR78#R158%&	0.158	10	S, W, N, Z	B, D, F	S	P, R	DAL, SHA, TEP
RWR78#R160%&	0.160	10	S, W, N, Z	B, D	S	P, R	DAL, SHA, TEP
RWR78#R162%&	0.162	10	S, W, N, Z	B, D, F	S	P, R	DAL, SHA, TEP
RWR78#R164%&	0.164	10	S, W, N, Z	B, D	S	P, R	DAL, SHA, TEP
RWR78#R165%&	0.165	10	S, W, N, Z	B, D, F	S	P, R	DAL, SHA, TEP
RWR78#R167%&	0.167	10	S, W, N, Z	B, D	S	P, R	DAL, SHA, TEP
RWR78#R169%&	0.169	10	S, W, N, Z	B, D, F	S	P, R	DAL, SHA, TEP
RWR78#R172%&	0.172	10	S, W, N, Z	B, D	S	P, R	DAL, SHA, TEP
RWR78#R174%&	0.174	10	S, W, N, Z	B, D, F	S	P, R	DAL, SHA, TEP
RWR78#R176%&	0.176	10	S, W, N, Z	B, D	S	P, R	DAL, SHA, TEP
RWR78#R178#&	0.178	10	S, W, N, Z	B, D, F	S	P, R	DAL, SHA, TEP
RWR78#R180%&	0.180	10	S, W, N, Z	B, D, F	S	P, R	DAL, SHA, TEP
RWR78#R182%&	0.182	10	S, W, N, Z	B, D, F	S	P, R	DAL, SHA, TEP
RWR78#R184%&	0.184	10	S, W, N, Z	B, D	S	P, R	DAL, SHA, TEP
RWR78#R187%&	0.187	10	S, W, N, Z	B, D, F	S	P, R	DAL, SHA, TEP
RWR78#R189%&	0.189	10	S, W, N, Z	B, D	S	P, R	DAL, SHA, TEP
RWR78#R191%&	0.191	10	S, W, N, Z	B, D, F	S	P, R	DAL, SHA, TEP
RWR78#R193%&	0.193	10	S, W, N, Z	B, D	S	P, R	DAL, SHA, TEP
RWR78#R196%&	0.196	10	S, W, N, Z	B, D, F	S	P, R	DAL, SHA, TEP
RWR78#R198%&	0.198	10	S, W, N, Z	B, D	S	P, R	DAL, SHA, TEP
RWR78#R200%&	0.200	10	S, W, N, Z	B, D, F	S	P, R	DAL, SHA, TEP
RWR78#R203%&	0.203	10	S, W, N, Z	B, D	S	P, R	DAL, SHA, TEP
RWR78#R205%&	0.205	10	S, W, N, Z	B, D, F	S	P, R	DAL, SHA, TEP
RWR78#R208%&	0.208	10	S, W, N, Z	B, D	S	P, R	DAL, SHA, TEP
RWR78#R210%&	0.210	10	S, W, N, Z	B, D, F	S	P, R	DAL, SHA, TEP
RWR78#R213%&	0.213	10	S, W, N, Z	B, D	S	P, R	DAL, SHA, TEP

RWR78#R215%&	0.215	10	S, W, N, Z	B, D, F	S	P, R	DAL, SHA, TEP
RWR78#R218%&	0.218	10	S, W, N, Z	B, D	S	P, R	DAL, SHA, TEP
RWR78#R221%&	0.221	10	S, W, N, Z	B, D, F	S	P, R	DAL, SHA, TEP
RWR78#R223%&	0.223	10	S, W, N, Z	B, D	S	P, R	DAL, SHA, TEP
RWR78#R226%&	0.226	10	S, W, N, Z	B, D, F	S	P, R	DAL, SHA, TEP
RWR78#R229%&	0.229	10	S, W, N, Z	B, D	S	P, R	DAL, SHA, TEP
RWR78#R232%&	0.232	10	S, W, N, Z	B, D, F	S	P, R	DAL, SHA, TEP
RWR78#R234%&	0.234	10	S, W, N, Z	B, D	S	P, R	DAL, SHA, TEP
RWR78#R237%&	0.237	10	S, W, N, Z	B, D, F	S	P, R	DAL, SHA, TEP
RWR78#R240%&	0.240	10	S, W, N, Z	B, D	S	P, R	DAL, SHA, TEP
RWR78#R243%&	0.243	10	S, W, N, Z	B, D, F	S	P, R	DAL, SHA, TEP
RWR78#R246%&	0.246	10	S, W, N, Z	B, D	S	P, R	DAL, SHA, TEP
RWR78#R249%&	0.249	10	S, W, N, Z	B, D, F	S	P, R	DAL, SHA, TEP
RWR78#R252%&	0.252	10	S, W, N, Z	B, D	S	P, R	DAL, SHA, TEP
RWR78#R255%&	0.255	10	S, W, N, Z	B, D, F	S	P, R	DAL, SHA, TEP
RWR78#R258%&	0.258	10	S, W, N, Z	B, D	S	P, R	DAL, SHA, TEP
RWR78#R261%&	0.261	10	S, W, N, Z	B, D, F	S	P, R	DAL, SHA, TEP
RWR78#R264%&	0.264	10	S, W, N, Z	B, D	S	P, R	DAL, SHA, TEP
RWR78#R267%&	0.267	10	S, W, N, Z	B, D, F	S	P, R	DAL, SHA, TEP
RWR78#R271%&	0.271	10	S, W, N, Z	B, D	S	P, R	DAL, SHA, TEP
RWR78#R274%&	0.274	10	S, W, N, Z	B, D, F	S	P, R	DAL, SHA, TEP
RWR78#R277%&	0.277	10	S, W, N, Z	B, D	S	P, R	DAL, SHA, TEP
RWR78#R280%&	0.280	10	S, W, N, Z	B, D, F	S	P, R	DAL, SHA, TEP
RWR78#R284%&	0.284	10	S, W, N, Z	B, D	S	P, R	DAL, SHA, TEP
RWR78#R287%&	0.287	10	S, W, N, Z	B, D, F	S	P, R	DAL, SHA, TEP
RWR78#R291%&	0.291	10	S, W, N, Z	B, D	S	P, R	DAL, SHA, TEP
RWR78#R294%&	0.294	10	S, W, N, Z	B, D, F	S	P, R	DAL, SHA, TEP
RWR78#R298%&	0.298	10	S, W, N, Z	B, D	S	P, R	DAL, SHA, TEP
RWR78#R301%&	0.301	10	S, W, N, Z	B, D, F	S	P, R	DAL, SHA, TEP
RWR78#R305%&	0.305	10	S, W, N, Z	B, D	S	P, R	DAL, SHA, TEP
RWR78#R309%&	0.309	10	S, W, N, Z	B, D, F	S	P, R	DAL, SHA, TEP
RWR78#R312%&	0.312	10	S, W, N, Z	B, D	S	P, R	DAL, SHA, TEP
RWR78#R316%&	0.316	10	S, W, N, Z	B, D, F	S	P, R	DAL, SHA, TEP
RWR78#R320%&	0.320	10	S, W, N, Z	B, D	S	P, R	DAL, SHA, TEP
RWR78#R324%&	0.324	10	S, W, N, Z	B, D, F	S	P, R	DAL, SHA, TEP
RWR78#R328%&	0.328	10	S, W, N, Z	B, D	S	P, R	DAL, SHA, TEP
RWR78#R332%&	0.332	10	S, W, N, Z	B, D, F	S	P, R	DAL, SHA, TEP
RWR78#R336%&	0.336	10	S, W, N, Z	B, D	S	P, R	DAL, SHA, TEP
RWR78#R340%&	0.340	10	S, W, N, Z	B, D, F	S	P, R	DAL, SHA, TEP
RWR78#R344%&	0.344	10	S, W, N, Z	B, D	S	P, R	DAL, SHA, TEP
RWR78#R348%&	0.348	10	S, W, N, Z	B, D, F	S	P, R	DAL, SHA, TEP
RWR78#R352%&	0.352	10	S, W, N, Z	B, D	S	P, R	DAL, SHA, TEP
RWR78#R357%&	0.357	10	S, W, N, Z	B, D, F	S	P, R	DAL, SHA, TEP
RWR78#R361%&	0.361	10	S, W, N, Z	B, D	S	P, R	DAL, SHA, TEP
RWR78#R365%&	0.365	10	S, W, N, Z	B, D, F	S	P, R	DAL, SHA, TEP
RWR78#R370%&	0.370	10	S, W, N, Z	B, D	S	P, R	DAL, SHA, TEP
RWR78#R374%&	0.374	10	S, W, N, Z	B, D, F	S	P, R	DAL, SHA, TEP

RWR78#R379%&	0.379	10	S, W, N, Z	B, D	S	P, R	DAL, SHA, TEP
RWR78#R383%&	0.383	10	S, W, N, Z	B, D, F	S	P, R	DAL, SHA, TEP
RWR78#R388%&	0.388	10	S, W, N, Z	B, D	S	P, R	DAL, SHA, TEP
RWR78#R392%&	0.392	10	S, W, N, Z	B, D, F	S	P, R	DAL, SHA, TEP
RWR78#R397%&	0.397	10	S, W, N, Z	B, D	S	P, R	DAL, SHA, TEP
RWR78#R402%&	0.402	10	S, W, N, Z	B, D, F	S	P, R	DAL, SHA, TEP
RWR78#R407%&	0.407	10	S, W, N, Z	B, D	S	P, R	DAL, SHA, TEP
RWR78#R412%&	0.412	10	S, W, N, Z	B, D, F	S	P, R	DAL, SHA, TEP
RWR78#R417%&	0.417	10	S, W, N, Z	B, D	S	P, R	DAL, SHA, TEP
RWR78#R422%&	0.422	10	S, W, N, Z	B, D, F	S	P, R	DAL, SHA, TEP
RWR78#R427%&	0.427	10	S, W, N, Z	B, D	S	P, R	DAL, SHA, TEP
RWR78#R432%&	0.432	10	S, W, N, Z	B, D, F	S	P, R	DAL, SHA, TEP
RWR78#R437%&	0.437	10	S, W, N, Z	B, D	S	P, R	DAL, SHA, TEP
RWR78#R442%&	0.442	10	S, W, N, Z	B, D, F	S	P, R	DAL, SHA, TEP
RWR78#R448%&	0.448	10	S, W, N, Z	B, D	S	P, R	DAL, SHA, TEP
RWR78#R453%&	0.453	10	S, W, N, Z	B, D, F	S	P, R	DAL, SHA, TEP
RWR78#R459%&	0.459	10	S, W, N, Z	B, D	S	P, R	DAL, SHA, TEP
RWR78#R464%&	0.464	10	S, W, N, Z	B, D, F	S	P, R	DAL, SHA, TEP
RWR78#R470%&	0.470	10	S, W, N, Z	B, D	S	P, R	DAL, SHA, TEP
RWR78#R475%&	0.475	10	S, W, N, Z	B, D, F	S	P, R	DAL, SHA, TEP
RWR78#R481%&	0.481	10	S, W, N, Z	B, D	S	P, R	DAL, SHA, TEP
RWR78#R487%&	0.487	10	S, W, N, Z	B, D, F	S	P, R	DAL, SHA, TEP
RWR78#R493%&	0.493	10	S, W, N, Z	B, D	S	P, R	DAL, SHA, TEP
RWR78#R499%&	0.499	10	S, W, N, Z	B, D, F	S	P, R	DAL, SHA, TEP
RWR78#R505%&	0.505	10	S, W, N, Z	B, D	S	P, R	DAL, SHA, TEP
RWR78#R511%&	0.511	10	S, W, N, Z	B, D, F	S	P, R	DAL, SHA, TEP
RWR78#R517%&	0.517	10	S, W, N, Z	B, D	S	P, R	DAL, SHA, TEP
RWR78#R523%&	0.523	10	S, W, N, Z	B, D, F	S	P, R	DAL, SHA, TEP
RWR78#R530%&	0.530	10	S, W, N, Z	B, D	S	P, R	DAL, SHA, TEP
RWR78#R536%&	0.536	10	S, W, N, Z	B, D, F	S	P, R	DAL, SHA, TEP
RWR78#R542%&	0.542	10	S, W, N, Z	B, D	S	P, R	DAL, SHA, TEP
RWR78#R549%&	0.549	10	S, W, N, Z	B, D, F	S	P, R	DAL, SHA, TEP
RWR78#R556%&	0.556	10	S, W, N, Z	B, D	S	P, R	DAL, SHA, TEP
RWR78#R562%&	0.562	10	S, W, N, Z	B, D, F	S	P, R	DAL, SHA, TEP
RWR78#R569%&	0.569	10	S, W, N, Z	B, D	S	P, R	DAL, SHA, TEP
RWR78#R576%&	0.576	10	S, W, N, Z	B, D, F	S	P, R	DAL, SHA, TEP
RWR78#R583%&	0.583	10	S, W, N, Z	B, D	S	P, R	DAL, SHA, TEP
RWR78#R590%&	0.590	10	S, W, N, Z	B, D, F	S	P, R	DAL, SHA, TEP
RWR78#R597%&	0.597	10	S, W, N, Z	B, D	S	P, R	DAL, SHA, TEP
RWR78#R604%&	0.604	10	S, W, N, Z	B, D, F	S	P, R	DAL, SHA, TEP
RWR78#R612%&	0.612	10	S, W, N, Z	B, D	S	P, R	DAL, SHA, TEP
RWR78#R619%&	0.619	10	S, W, N, Z	B, D, F	S	P, R	DAL, SHA, TEP
RWR78#R626%&	0.626	10	S, W, N, Z	B, D	S	P, R	DAL, SHA, TEP
RWR78#R634%&	0.634	10	S, W, N, Z	B, D, F	S	P, R	DAL, SHA, TEP
RWR78#R642%&	0.642	10	S, W, N, Z	B, D	S	P, R	DAL, SHA, TEP
RWR78#R649%&	0.649	10	S, W, N, Z	B, D, F	S	P, R	DAL, SHA, TEP
RWR78#R657%&	0.657	10	S, W, N, Z	B, D	S	P, R	DAL, SHA, TEP

RWR78#R665%&	0.665	10	S, W, N, Z	B, D, F	S	P, R	DAL, SHA, TEP
RWR78#R673%&	0.673	10	S, W, N, Z	B, D	S	P, R	DAL, SHA, TEP
RWR78#R681%&	0.681	10	S, W, N, Z	B, D, F	S	P, R	DAL, SHA, TEP
RWR78#R690%&	0.690	10	S, W, N, Z	B, D	S	P, R	DAL, SHA, TEP
RWR78#R698%&	0.698	10	S, W, N, Z	B, D, F	S	P, R	DAL, SHA, TEP
RWR78#R706%&	0.706	10	S, W, N, Z	B, D	S	P, R	DAL, SHA, TEP
RWR78#R715%&	0.715	10	S, W, N, Z	B, D, F	S	P, R	DAL, SHA, TEP
RWR78#R723%&	0.723	10	S, W, N, Z	B, D	S	P, R	DAL, SHA, TEP
RWR78#R732%&	0.732	10	S, W, N, Z	B, D, F	S	P, R	DAL, SHA, TEP
RWR78#R741%&	0.741	10	S, W, N, Z	B, D	S	P, R	DAL, SHA, TEP
RWR78#R750%&	0.750	10	S, W, N, Z	B, D, F	S	P, R	DAL, SHA, TEP
RWR78#R759%&	0.759	10	S, W, N, Z	B, D	S	P, R	DAL, SHA, TEP
RWR78#R768%&	0.768	10	S, W, N, Z	B, D, F	S	P, R	DAL, SHA, TEP
RWR78#R776%&	0.776	10	S, W, N, Z	B, D	S	P, R	DAL, SHA, TEP
RWR78#R787%&	0.787	10	S, W, N, Z	B, D, F	S	P, R	DAL, SHA, TEP
RWR78#R796%&	0.796	10	S, W, N, Z	B, D	S	P, R	DAL, SHA, TEP
RWR78#R806%&	0.806	10	S, W, N, Z	B, D, F	S	P, R	DAL, SHA, TEP
RWR78#R816%&	0.816	10	S, W, N, Z	B, D	S	P, R	DAL, SHA, TEP
RWR78#R825%&	0.825	10	S, W, N, Z	B, D, F	S	P, R	DAL, SHA, TEP
RWR78#R835%&	0.835	10	S, W, N, Z	B, D	S	P, R	DAL, SHA, TEP
RWR78#R845%&	0.845	10	S, W, N, Z	B, D, F	S	P, R	DAL, SHA, TEP
RWR78#R856%&	0.856	10	S, W, N, Z	B, D	S	P, R	DAL, SHA, TEP
RWR78#R866%&	0.866	10	S, W, N, Z	B, D, F	S	P, R	DAL, SHA, TEP
RWR78#R876%&	0.876	10	S, W, N, Z	B, D	S	P, R	DAL, SHA, TEP
RWR78#R887%&	0.887	10	S, W, N, Z	B, D, F	S	P, R	DAL, SHA, TEP
RWR78#R898%&	0.898	10	S, W, N, Z	B, D	S	P, R	DAL, SHA, TEP
RWR78#R909%&	0.909	10	S, W, N, Z	B, D, F	S	P, R	DAL, SHA, TEP
RWR78#R920%&	0.920	10	S, W, N, Z	B, D	S	P, R	DAL, SHA, TEP
RWR78#R931%&	0.931	10	S, W, N, Z	B, D, F	S	P, R	DAL, SHA, TEP
RWR78#R942%&	0.942	10	S, W, N, Z	B, D	S	P, R	DAL, SHA, TEP
RWR78#R953%&	0.953	10	S, W, N, Z	B, D, F	S	P, R	DAL, SHA, TEP
RWR78#R965%&	0.965	10	S, W, N, Z	B, D	S	P, R	DAL, SHA, TEP
RWR78#R976%&	0.976	10	S, W, N, Z	B, D, F	S	P, R	DAL, SHA, TEP
RWR78#R988%&	0.988	10	S, W, N, Z	B, D	S	P, R	DAL, SHA, TEP
RWR78#1R00%&	1.00	10	S, W, N, Z	B, D, F	S	P, R	DAL, SHA, TEP
RWR78#1R01%&	1.01	10	S, W, N, Z	B, D	S	P, R	DAL, SHA, TEP
RWR78#1R02%&	1.02	10	S, W, N, Z	B, D, F	S	P, R	DAL, SHA, TEP
RWR78#1R04%&	1.04	10	S, W, N, Z	B, D	S	P, R	DAL, SHA, TEP
RWR78#1R05%&	1.05	10	S, W, N, Z	B, D, F	S	P, R	DAL, SHA, TEP
RWR78#1R06%&	1.06	10	S, W, N, Z	B, D	S	P, R	DAL, SHA, TEP
RWR78#1R07%&	1.07	10	S, W, N, Z	B, D, F	S	P, R	DAL, SHA, TEP
RWR78#1R09%&	1.09	10	S, W, N, Z	B, D	S	P, R	DAL, SHA, TEP
RWR78#1R10%&	1.10	10	S, W, N, Z	B, D, F	S	P, R	DAL, SHA, TEP
RWR78#1R11%&	1.11	10	S, W, N, Z	B, D	S	P, R	DAL, SHA, TEP
RWR78#1R13%&	1.13	10	S, W, N, Z	B, D, F	S	P, R	DAL, SHA, TEP
RWR78#1R14%&	1.14	10	S, W, N, Z	B, D	S	P, R	DAL, SHA, TEP
RWR78#1R15%&	1.15	10	S, W, N, Z	B, D, F	S	P, R	DAL, SHA, TEP

RWR78#1R17%&	1.17	10	S, W, N, Z	B, D	S	P, R	DAL, SHA, TEP
RWR78#1R18%&	1.18	10	S, W, N, Z	B, D, F	S	P, R	DAL, SHA, TEP
RWR78#1R20%&	1.20	10	S, W, N, Z	B, D	S	P, R	DAL, SHA, TEP
RWR78#1R21%&	1.21	10	S, W, N, Z	B, D, F	S	P, R	DAL, SHA, TEP
RWR78#1R23%&	1.23	10	S, W, N, Z	B, D	S	P, R	DAL, SHA, TEP
RWR78#1R24%&	1.24	10	S, W, N, Z	B, D, F	S	P, R	DAL, SHA, TEP
RWR78#1R26%&	1.26	10	S, W, N, Z	B, D	S	P, R	DAL, SHA, TEP
RWR78#1R27%&	1.27	10	S, W, N, Z	B, D, F	S	P, R	DAL, SHA, TEP
RWR78#1R29%&	1.29	10	S, W, N, Z	B, D	S	P, R	DAL, SHA, TEP
RWR78#1R30%&	1.30	10	S, W, N, Z	B, D, F	S	P, R	DAL, SHA, TEP
RWR78#1R32%&	1.32	10	S, W, N, Z	B, D	S	P, R	DAL, SHA, TEP
RWR78#1R33%&	1.33	10	S, W, N, Z	B, D, F	S	P, R	DAL, SHA, TEP
RWR78#1R35%&	1.35	10	S, W, N, Z	B, D	S	P, R	DAL, SHA, TEP
RWR78#1R37%&	1.37	10	S, W, N, Z	B, D, F	S	P, R	DAL, SHA, TEP
RWR78#1R38%&	1.38	10	S, W, N, Z	B, D	S	P, R	DAL, SHA, TEP
RWR78#1R40%&	1.40	10	S, W, N, Z	B, D, F	S	P, R	DAL, SHA, TEP
RWR78#1R42%&	1.42	10	S, W, N, Z	B, D	S	P, R	DAL, SHA, TEP
RWR78#1R43%&	1.43	10	S, W, N, Z	B, D, F	S	P, R	DAL, SHA, TEP
RWR78#1R45%&	1.45	10	S, W, N, Z	B, D	S	P, R	DAL, SHA, TEP
RWR78#1R47%&	1.47	10	S, W, N, Z	B, D, F	S	P, R	DAL, SHA, TEP
RWR78#1R49%&	1.49	10	S, W, N, Z	B, D	S	P, R	DAL, SHA, TEP
RWR78#1R50%&	1.50	10	S, W, N, Z	B, D, F	S	P, R	DAL, SHA, TEP
RWR78#1R52%&	1.52	10	S, W, N, Z	B, D	S	P, R	DAL, SHA, TEP
RWR78#1R54%&	1.54	10	S, W, N, Z	B, D, F	S	P, R	DAL, SHA, TEP
RWR78#1R56%&	1.56	10	S, W, N, Z	B, D	S	P, R	DAL, SHA, TEP
RWR78#1R58%&	1.58	10	S, W, N, Z	B, D, F	S	P, R	DAL, SHA, TEP
RWR78#1R60%&	1.60	10	S, W, N, Z	B, D	S	P, R	DAL, SHA, TEP
RWR78#1R62%&	1.62	10	S, W, N, Z	B, D, F	S	P, R	DAL, SHA, TEP
RWR78#1R64%&	1.64	10	S, W, N, Z	B, D	S	P, R	DAL, SHA, TEP
RWR78#1R65%&	1.65	10	S, W, N, Z	B, D, F	S	P, R	DAL, SHA, TEP
RWR78#1R67%&	1.67	10	S, W, N, Z	B, D	S	P, R	DAL, SHA, TEP
RWR78#1R69%&	1.69	10	S, W, N, Z	B, D, F	S	P, R	DAL, SHA, TEP
RWR78#1R72%&	1.72	10	S, W, N, Z	B, D	S	P, R	DAL, SHA, TEP
RWR78#1R74%&	1.74	10	S, W, N, Z	B, D, F	S	P, R	DAL, SHA, TEP
RWR78#1R76%&	1.76	10	S, W, N, Z	B, D	S	P, R	DAL, SHA, TEP
RWR78#1R78#&	1.78	10	S, W, N, Z	B, D, F	S	P, R	DAL, SHA, TEP
RWR78#1R80%&	1.80	10	S, W, N, Z	B, D, F	S	P, R	DAL, SHA, TEP
RWR78#1R82%&	1.82	10	S, W, N, Z	B, D, F	S	P, R	DAL, SHA, TEP
RWR78#1R84%&	1.84	10	S, W, N, Z	B, D	S	P, R	DAL, SHA, TEP
RWR78#1R87%&	1.87	10	S, W, N, Z	B, D, F	S	P, R	DAL, SHA, TEP
RWR78#1R89%&	1.89	10	S, W, N, Z	B, D	S	P, R	DAL, SHA, TEP
RWR78#1R91%&	1.91	10	S, W, N, Z	B, D, F	S	P, R	DAL, SHA, TEP
RWR78#1R93%&	1.93	10	S, W, N, Z	B, D	S	P, R	DAL, SHA, TEP
RWR78#1R96%&	1.96	10	S, W, N, Z	B, D, F	S	P, R	DAL, SHA, TEP
RWR78#1R98%&	1.98	10	S, W, N, Z	B, D	S	P, R	DAL, SHA, TEP
RWR78#2R00%&	2.00	10	S, W, N, Z	B, D, F	S	P, R	DAL, SHA, TEP
RWR78#2R03%&	2.03	10	S, W, N, Z	B, D	S	P, R	DAL, SHA, TEP

RWR78#2R05%&	2.05	10	S, W, N, Z	B, D, F	S	P, R	DAL, SHA, TEP
RWR78#2R08%&	2.08	10	S, W, N, Z	B, D	S	P, R	DAL, SHA, TEP
RWR78#2R10%&	2.10	10	S, W, N, Z	B, D, F	S	P, R	DAL, SHA, TEP
RWR78#2R13%&	2.13	10	S, W, N, Z	B, D	S	P, R	DAL, SHA, TEP
RWR78#2R15%&	2.15	10	S, W, N, Z	B, D, F	S	P, R	DAL, SHA, TEP
RWR78#2R18%&	2.18	10	S, W, N, Z	B, D	S	P, R	DAL, SHA, TEP
RWR78#2R21%&	2.21	10	S, W, N, Z	B, D, F	S	P, R	DAL, SHA, TEP
RWR78#2R23%&	2.23	10	S, W, N, Z	B, D	S	P, R	DAL, SHA, TEP
RWR78#2R26%&	2.26	10	S, W, N, Z	B, D, F	S	P, R	DAL, SHA, TEP
RWR78#2R29%&	2.29	10	S, W, N, Z	B, D	S	P, R	DAL, SHA, TEP
RWR78#2R32%&	2.32	10	S, W, N, Z	B, D, F	S	P, R	DAL, SHA, TEP
RWR78#2R34%&	2.34	10	S, W, N, Z	B, D	S	P, R	DAL, SHA, TEP
RWR78#2R37%&	2.37	10	S, W, N, Z	B, D, F	S	P, R	DAL, SHA, TEP
RWR78#2R40%&	2.40	10	S, W, N, Z	B, D	S	P, R	DAL, SHA, TEP
RWR78#2R43%&	2.43	10	S, W, N, Z	B, D, F	S	P, R	DAL, SHA, TEP
RWR78#2R46%&	2.46	10	S, W, N, Z	B, D	S	P, R	DAL, SHA, TEP
RWR78#2R49%&	2.49	10	S, W, N, Z	B, D, F	S	P, R	DAL, SHA, TEP
RWR78#2R52%&	2.52	10	S, W, N, Z	B, D	S	P, R	DAL, SHA, TEP
RWR78#2R55%&	2.55	10	S, W, N, Z	B, D, F	S	P, R	DAL, SHA, TEP
RWR78#2R58%&	2.58	10	S, W, N, Z	B, D	S	P, R	DAL, SHA, TEP
RWR78#2R61%&	2.61	10	S, W, N, Z	B, D, F	S	P, R	DAL, SHA, TEP
RWR78#2R64%&	2.64	10	S, W, N, Z	B, D	S	P, R	DAL, SHA, TEP
RWR78#2R67%&	2.67	10	S, W, N, Z	B, D, F	S	P, R	DAL, SHA, TEP
RWR78#2R71%&	2.71	10	S, W, N, Z	B, D	S	P, R	DAL, SHA, TEP
RWR78#2R74%&	2.74	10	S, W, N, Z	B, D, F	S	P, R	DAL, SHA, TEP
RWR78#2R77%&	2.77	10	S, W, N, Z	B, D	S	P, R	DAL, SHA, TEP
RWR78#2R80%&	2.80	10	S, W, N, Z	B, D, F	S	P, R	DAL, SHA, TEP
RWR78#2R84%&	2.84	10	S, W, N, Z	B, D	S	P, R	DAL, SHA, TEP
RWR78#2R87%&	2.87	10	S, W, N, Z	B, D, F	S	P, R	DAL, SHA, TEP
RWR78#2R91%&	2.91	10	S, W, N, Z	B, D	S	P, R	DAL, SHA, TEP
RWR78#2R94%&	2.94	10	S, W, N, Z	B, D, F	S	P, R	DAL, SHA, TEP
RWR78#2R98%&	2.98	10	S, W, N, Z	B, D	S	P, R	DAL, SHA, TEP
RWR78#3R01%&	3.01	10	S, W, N, Z	B, D, F	S	P, R	DAL, SHA, TEP
RWR78#3R05%&	3.05	10	S, W, N, Z	B, D	S	P, R	DAL, SHA, TEP
RWR78#3R09%&	3.09	10	S, W, N, Z	B, D, F	S	P, R	DAL, SHA, TEP
RWR78#3R12%&	3.12	10	S, W, N, Z	B, D	S	P, R	DAL, SHA, TEP
RWR78#3R16%&	3.16	10	S, W, N, Z	B, D, F	S	P, R	DAL, SHA, TEP
RWR78#3R20%&	3.20	10	S, W, N, Z	B, D	S	P, R	DAL, SHA, TEP
RWR78#3R24%&	3.24	10	S, W, N, Z	B, D, F	S	P, R	DAL, SHA, TEP
RWR78#3R28%&	3.28	10	S, W, N, Z	B, D	S	P, R	DAL, SHA, TEP
RWR78#3R32%&	3.32	10	S, W, N, Z	B, D, F	S	P, R	DAL, SHA, TEP
RWR78#3R36%&	3.36	10	S, W, N, Z	B, D	S	P, R	DAL, SHA, TEP
RWR78#3R40%&	3.40	10	S, W, N, Z	B, D, F	S	P, R	DAL, SHA, TEP
RWR78#3R44%&	3.44	10	S, W, N, Z	B, D	S	P, R	DAL, SHA, TEP
RWR78#3R48%&	3.48	10	S, W, N, Z	B, D, F	S	P, R	DAL, SHA, TEP
RWR78#3R52%&	3.52	10	S, W, N, Z	B, D	S	P, R	DAL, SHA, TEP
RWR78#3R57%&	3.57	10	S, W, N, Z	B, D, F	S	P, R	DAL, SHA, TEP

RWR78#3R61%&	3.61	10	S, W, N, Z	B, D	S	P, R	DAL, SHA, TEP
RWR78#3R65%&	3.65	10	S, W, N, Z	B, D, F	S	P, R	DAL, SHA, TEP
RWR78#3R70%&	3.70	10	S, W, N, Z	B, D	S	P, R	DAL, SHA, TEP
RWR78#3R74%&	3.74	10	S, W, N, Z	B, D, F	S	P, R	DAL, SHA, TEP
RWR78#3R79%&	3.79	10	S, W, N, Z	B, D	S	P, R	DAL, SHA, TEP
RWR78#3R83%&	3.83	10	S, W, N, Z	B, D, F	S	P, R	DAL, SHA, TEP
RWR78#3R88%&	3.88	10	S, W, N, Z	B, D	S	P, R	DAL, SHA, TEP
RWR78#3R92%&	3.92	10	S, W, N, Z	B, D, F	S	P, R	DAL, SHA, TEP
RWR78#3R97%&	3.97	10	S, W, N, Z	B, D	S	P, R	DAL, SHA, TEP
RWR78#4R02%&	4.02	10	S, W, N, Z	B, D, F	S	P, R	DAL, SHA, TEP
RWR78#4R07%&	4.07	10	S, W, N, Z	B, D	S	P, R	DAL, SHA, TEP
RWR78#4R12%&	4.12	10	S, W, N, Z	B, D, F	S	P, R	DAL, SHA, TEP
RWR78#4R17%&	4.17	10	S, W, N, Z	B, D	S	P, R	DAL, SHA, TEP
RWR78#4R22%&	4.22	10	S, W, N, Z	B, D, F	S	P, R	DAL, SHA, TEP
RWR78#4R27%&	4.27	10	S, W, N, Z	B, D	S	P, R	DAL, SHA, TEP
RWR78#4R32%&	4.32	10	S, W, N, Z	B, D, F	S	P, R	DAL, SHA, TEP
RWR78#4R37%&	4.37	10	S, W, N, Z	B, D	S	P, R	DAL, SHA, TEP
RWR78#4R42%&	4.42	10	S, W, N, Z	B, D, F	S	P, R	DAL, SHA, TEP
RWR78#4R48%&	4.48	10	S, W, N, Z	B, D	S	P, R	DAL, SHA, TEP
RWR78#4R53%&	4.53	10	S, W, N, Z	B, D, F	S	P, R	DAL, SHA, TEP
RWR78#4R59%&	4.59	10	S, W, N, Z	B, D	S	P, R	DAL, SHA, TEP
RWR78#4R64%&	4.64	10	S, W, N, Z	B, D, F	S	P, R	DAL, SHA, TEP
RWR78#4R70%&	4.70	10	S, W, N, Z	B, D	S	P, R	DAL, SHA, TEP
RWR78#4R75%&	4.75	10	S, W, N, Z	B, D, F	S	P, R	DAL, SHA, TEP
RWR78#4R81%&	4.81	10	S, W, N, Z	B, D	S	P, R	DAL, SHA, TEP
RWR78#4R87%&	4.87	10	S, W, N, Z	B, D, F	S	P, R	DAL, SHA, TEP
RWR78#4R93%&	4.93	10	S, W, N, Z	B, D	S	P, R	DAL, SHA, TEP
RWR78#4R99%&	4.99	10	S, W, N, Z	B, D, F	S	P, R	DAL, SHA, TEP
RWR78#5R05%&	5.05	10	S, W, N, Z	B, D	S	P, R	DAL, SHA, TEP
RWR78#5R11%&	5.11	10	S, W, N, Z	B, D, F	S	P, R	DAL, SHA, TEP
RWR78#5R17%&	5.17	10	S, W, N, Z	B, D	S	P, R	DAL, SHA, TEP
RWR78#5R23%&	5.23	10	S, W, N, Z	B, D, F	S	P, R	DAL, SHA, TEP
RWR78#5R30%&	5.30	10	S, W, N, Z	B, D	S	P, R	DAL, SHA, TEP
RWR78#5R36%&	5.36	10	S, W, N, Z	B, D, F	S	P, R	DAL, SHA, TEP
RWR78#5R42%&	5.42	10	S, W, N, Z	B, D	S	P, R	DAL, SHA, TEP
RWR78#5R49%&	5.49	10	S, W, N, Z	B, D, F	S	P, R	DAL, SHA, TEP
RWR78#5R56%&	5.56	10	S, W, N, Z	B, D	S	P, R	DAL, SHA, TEP
RWR78#5R62%&	5.62	10	S, W, N, Z	B, D, F	S	P, R	DAL, SHA, TEP
RWR78#5R69%&	5.69	10	S, W, N, Z	B, D	S	P, R	DAL, SHA, TEP
RWR78#5R76%&	5.76	10	S, W, N, Z	B, D, F	S	P, R	DAL, SHA, TEP
RWR78#5R83%&	5.83	10	S, W, N, Z	B, D	S	P, R	DAL, SHA, TEP
RWR78#5R90%&	5.90	10	S, W, N, Z	B, D, F	S	P, R	DAL, SHA, TEP
RWR78#5R97%&	5.97	10	S, W, N, Z	B, D	S	P, R	DAL, SHA, TEP
RWR78#6R04%&	6.04	10	S, W, N, Z	B, D, F	S	P, R	DAL, SHA, TEP
RWR78#6R12%&	6.12	10	S, W, N, Z	B, D	S	P, R	DAL, SHA, TEP
RWR78#6R19%&	6.19	10	S, W, N, Z	B, D, F	S	P, R	DAL, SHA, TEP
RWR78#6R26%&	6.26	10	S, W, N, Z	B, D	S	P, R	DAL, SHA, TEP

RWR78#6R34%&	6.34	10	S, W, N, Z	B, D, F	S	P, R	DAL, SHA, TEP
RWR78#6R42%&	6.42	10	S, W, N, Z	B, D	S	P, R	DAL, SHA, TEP
RWR78#6R49%&	6.49	10	S, W, N, Z	B, D, F	S	P, R	DAL, SHA, TEP
RWR78#6R57%&	6.57	10	S, W, N, Z	B, D	S	P, R	DAL, SHA, TEP
RWR78#6R65%&	6.65	10	S, W, N, Z	B, D, F	S	P, R	DAL, SHA, TEP
RWR78#6R73%&	6.73	10	S, W, N, Z	B, D	S	P, R	DAL, SHA, TEP
RWR78#6R81%&	6.81	10	S, W, N, Z	B, D, F	S	P, R	DAL, SHA, TEP
RWR78#6R90%&	6.90	10	S, W, N, Z	B, D	S	P, R	DAL, SHA, TEP
RWR78#6R98%&	6.98	10	S, W, N, Z	B, D, F	S	P, R	DAL, SHA, TEP
RWR78#7R06%&	7.06	10	S, W, N, Z	B, D	S	P, R	DAL, SHA, TEP
RWR78#7R15%&	7.15	10	S, W, N, Z	B, D, F	S	P, R	DAL, SHA, TEP
RWR78#7R23%&	7.23	10	S, W, N, Z	B, D	S	P, R	DAL, SHA, TEP
RWR78#7R32%&	7.32	10	S, W, N, Z	B, D, F	S	P, R	DAL, SHA, TEP
RWR78#7R41%&	7.41	10	S, W, N, Z	B, D	S	P, R	DAL, SHA, TEP
RWR78#7R50%&	7.50	10	S, W, N, Z	B, D, F	S	P, R	DAL, SHA, TEP
RWR78#7R59%&	7.59	10	S, W, N, Z	B, D	S	P, R	DAL, SHA, TEP
RWR78#7R68%&	7.68	10	S, W, N, Z	B, D, F	S	P, R	DAL, SHA, TEP
RWR78#7R77%&	7.77	10	S, W, N, Z	B, D	S	P, R	DAL, SHA, TEP
RWR78#7R87%&	7.87	10	S, W, N, Z	B, D, F	S	P, R	DAL, SHA, TEP
RWR78#7R96%&	7.96	10	S, W, N, Z	B, D	S	P, R	DAL, SHA, TEP
RWR78#8R06%&	8.06	10	S, W, N, Z	B, D, F	S	P, R	DAL, SHA, TEP
RWR78#8R16%&	8.16	10	S, W, N, Z	B, D	S	P, R	DAL, SHA, TEP
RWR78#8R25%&	8.25	10	S, W, N, Z	B, D, F	S	P, R	DAL, SHA, TEP
RWR78#8R35%&	8.35	10	S, W, N, Z	B, D	S	P, R	DAL, SHA, TEP
RWR78#8R45%&	8.45	10	S, W, N, Z	B, D, F	S	P, R	DAL, SHA, TEP
RWR78#8R56%&	8.56	10	S, W, N, Z	B, D	S	P, R	DAL, SHA, TEP
RWR78#8R66%&	8.66	10	S, W, N, Z	B, D, F	S	P, R	DAL, SHA, TEP
RWR78#8R76%&	8.76	10	S, W, N, Z	B, D	S	P, R	DAL, SHA, TEP
RWR78#8R87%&	8.87	10	S, W, N, Z	B, D, F	S	P, R	DAL, SHA, TEP
RWR78#8R98%&	8.98	10	S, W, N, Z	B, D	S	P, R	DAL, SHA, TEP
RWR78#9R09%&	9.09	10	S, W, N, Z	B, D, F	S	P, R	DAL, SHA, TEP
RWR78#9R20%&	9.20	10	S, W, N, Z	B, D	S	P, R	DAL, SHA, TEP
RWR78#9R31%&	9.31	10	S, W, N, Z	B, D, F	S	P, R	DAL, SHA, TEP
RWR78#9R42%&	9.42	10	S, W, N, Z	B, D	S	P, R	DAL, SHA, TEP
RWR78#9R53%&	9.53	10	S, W, N, Z	B, D, F	S	P, R	DAL, SHA, TEP
RWR78#9R65%&	9.65	10	S, W, N, Z	B, D	S	P, R	DAL, SHA, TEP
RWR78#9R76%&	9.76	10	S, W, N, Z	B, D, F	S	P, R	DAL, SHA, TEP
RWR78#9R88%&	9.88	10	S, W, N, Z	B, D	S	P, R	DAL, SHA, TEP
RWR78#10R0%&	10.0	10	S, W, N, Z	B, D, F	S	P, R	DAL, SHA, TEP
RWR78#10R1%&	10.1	10	S, W, N, Z	B, D	S	P, R	DAL, SHA, TEP
RWR78#10R2%&	10.2	10	S, W, N, Z	B, D, F	S	P, R	DAL, SHA, TEP
RWR78#10R4%&	10.4	10	S, W, N, Z	B, D	S	P, R	DAL, SHA, TEP
RWR78#10R5%&	10.5	10	S, W, N, Z	B, D, F	S	P, R	DAL, SHA, TEP
RWR78#10R6%&	10.6	10	S, W, N, Z	B, D	S	P, R	DAL, SHA, TEP
RWR78#10R7%&	10.7	10	S, W, N, Z	B, D, F	S	P, R	DAL, SHA, TEP
RWR78#10R9%&	10.9	10	S, W, N, Z	B, D	S	P, R	DAL, SHA, TEP
RWR78#11R0%&	11.0	10	S, W, N, Z	B, D, F	S	P, R	DAL, SHA, TEP

RWR78#11R1%&	11.1	10	S, W, N, Z	B, D	S	P, R	DAL, SHA, TEP
RWR78#11R3%&	11.3	10	S, W, N, Z	B, D, F	S	P, R	DAL, SHA, TEP
RWR78#11R4%&	11.4	10	S, W, N, Z	B, D	S	P, R	DAL, SHA, TEP
RWR78#11R5%&	11.5	10	S, W, N, Z	B, D, F	S	P, R	DAL, SHA, TEP
RWR78#11R7%&	11.7	10	S, W, N, Z	B, D	S	P, R	DAL, SHA, TEP
RWR78#11R8%&	11.8	10	S, W, N, Z	B, D, F	S	P, R	DAL, SHA, TEP
RWR78#12R0%&	12.0	10	S, W, N, Z	B, D	S	P, R	DAL, SHA, TEP
RWR78#12R1%&	12.1	10	S, W, N, Z	B, D, F	S	P, R	DAL, SHA, TEP
RWR78#12R3%&	12.3	10	S, W, N, Z	B, D	S	P, R	DAL, SHA, TEP
RWR78#12R4%&	12.4	10	S, W, N, Z	B, D, F	S	P, R	DAL, SHA, TEP
RWR78#12R6%&	12.6	10	S, W, N, Z	B, D	S	P, R	DAL, SHA, TEP
RWR78#12R7%&	12.7	10	S, W, N, Z	B, D, F	S	P, R	DAL, SHA, TEP
RWR78#12R9%&	12.9	10	S, W, N, Z	B, D	S	P, R	DAL, SHA, TEP
RWR78#13R0%&	13.0	10	S, W, N, Z	B, D, F	S	P, R	DAL, SHA, TEP
RWR78#13R2%&	13.2	10	S, W, N, Z	B, D	S	P, R	DAL, SHA, TEP
RWR78#13R3%&	13.3	10	S, W, N, Z	B, D, F	S	P, R	DAL, SHA, TEP
RWR78#13R5%&	13.5	10	S, W, N, Z	B, D	S	P, R	DAL, SHA, TEP
RWR78#13R7%&	13.7	10	S, W, N, Z	B, D, F	S	P, R	DAL, SHA, TEP
RWR78#13R8%&	13.8	10	S, W, N, Z	B, D	S	P, R	DAL, SHA, TEP
RWR78#14R0%&	14.0	10	S, W, N, Z	B, D, F	S	P, R	DAL, SHA, TEP
RWR78#14R2%&	14.2	10	S, W, N, Z	B, D	S	P, R	DAL, SHA, TEP
RWR78#14R3%&	14.3	10	S, W, N, Z	B, D, F	S	P, R	DAL, SHA, TEP
RWR78#14R5%&	14.5	10	S, W, N, Z	B, D	S	P, R	DAL, SHA, TEP
RWR78#14R7%&	14.7	10	S, W, N, Z	B, D, F	S	P, R	DAL, SHA, TEP
RWR78#14R9%&	14.9	10	S, W, N, Z	B, D	S	P, R	DAL, SHA, TEP
RWR78#15R0%&	15.0	10	S, W, N, Z	B, D, F	S	P, R	DAL, SHA, TEP
RWR78#15R2%&	15.2	10	S, W, N, Z	B, D	S	P, R	DAL, SHA, TEP
RWR78#15R4%&	15.4	10	S, W, N, Z	B, D, F	S	P, R	DAL, SHA, TEP
RWR78#15R6%&	15.6	10	S, W, N, Z	B, D	S	P, R	DAL, SHA, TEP
RWR78#15R8%&	15.8	10	S, W, N, Z	B, D, F	S	P, R	DAL, SHA, TEP
RWR78#16R0%&	16.0	10	S, W, N, Z	B, D	S	P, R	DAL, SHA, TEP
RWR78#16R2%&	16.2	10	S, W, N, Z	B, D, F	S	P, R	DAL, SHA, TEP
RWR78#16R4%&	16.4	10	S, W, N, Z	B, D	S	P, R	DAL, SHA, TEP
RWR78#16R5%&	16.5	10	S, W, N, Z	B, D, F	S	P, R	DAL, SHA, TEP
RWR78#16R7%&	16.7	10	S, W, N, Z	B, D	S	P, R	DAL, SHA, TEP
RWR78#16R9%&	16.9	10	S, W, N, Z	B, D, F	S	P, R	DAL, SHA, TEP
RWR78#17R2%&	17.2	10	S, W, N, Z	B, D	S	P, R	DAL, SHA, TEP
RWR78#17R4%&	17.4	10	S, W, N, Z	B, D, F	S	P, R	DAL, SHA, TEP
RWR78#17R6%&	17.6	10	S, W, N, Z	B, D	S	P, R	DAL, SHA, TEP
RWR78#17R8%&	17.8	10	S, W, N, Z	B, D, F	S	P, R	DAL, SHA, TEP
RWR78#18R0%&	18.0	10	S, W, N, Z	B, D, F	S	P, R	DAL, SHA, TEP
RWR78#18R2%&	18.2	10	S, W, N, Z	B, D, F	S	P, R	DAL, SHA, TEP
RWR78#18R4%&	18.4	10	S, W, N, Z	B, D	S	P, R	DAL, SHA, TEP
RWR78#18R7%&	18.7	10	S, W, N, Z	B, D, F	S	P, R	DAL, SHA, TEP
RWR78#18R9%&	18.9	10	S, W, N, Z	B, D	S	P, R	DAL, SHA, TEP
RWR78#19R1%&	19.1	10	S, W, N, Z	B, D, F	S	P, R	DAL, SHA, TEP
RWR78#19R3%&	19.3	10	S, W, N, Z	B, D	S	P, R	DAL, SHA, TEP

RWR78#19R6%&	19.6	10	S, W, N, Z	B, D, F	S	P, R	DAL, SHA, TEP
RWR78#19R8%&	19.8	10	S, W, N, Z	B, D	S	P, R	DAL, SHA, TEP
RWR78#20R0%&	20.0	10	S, W, N, Z	B, D, F	S	P, R	DAL, SHA, TEP
RWR78#20R3%&	20.3	10	S, W, N, Z	B, D	S	P, R	DAL, SHA, TEP
RWR78#20R5%&	20.5	10	S, W, N, Z	B, D, F	S	P, R	DAL, SHA, TEP
RWR78#20R8%&	20.8	10	S, W, N, Z	B, D	S	P, R	DAL, SHA, TEP
RWR78#21R0%&	21.0	10	S, W, N, Z	B, D, F	S	P, R	DAL, SHA, TEP
RWR78#21R3%&	21.3	10	S, W, N, Z	B, D	S	P, R	DAL, SHA, TEP
RWR78#21R5%&	21.5	10	S, W, N, Z	B, D, F	S	P, R	DAL, SHA, TEP
RWR78#21R8%&	21.8	10	S, W, N, Z	B, D	S	P, R	DAL, SHA, TEP
RWR78#22R1%&	22.1	10	S, W, N, Z	B, D, F	S	P, R	DAL, SHA, TEP
RWR78#22R3%&	22.3	10	S, W, N, Z	B, D	S	P, R	DAL, SHA, TEP
RWR78#22R6%&	22.6	10	S, W, N, Z	B, D, F	S	P, R	DAL, SHA, TEP
RWR78#22R9%&	22.9	10	S, W, N, Z	B, D	S	P, R	DAL, SHA, TEP
RWR78#23R2%&	23.2	10	S, W, N, Z	B, D, F	S	P, R	DAL, SHA, TEP
RWR78#23R4%&	23.4	10	S, W, N, Z	B, D	S	P, R	DAL, SHA, TEP
RWR78#23R7%&	23.7	10	S, W, N, Z	B, D, F	S	P, R	DAL, SHA, TEP
RWR78#24R0%&	24.0	10	S, W, N, Z	B, D	S	P, R	DAL, SHA, TEP
RWR78#24R3%&	24.3	10	S, W, N, Z	B, D, F	S	P, R	DAL, SHA, TEP
RWR78#24R6%&	24.6	10	S, W, N, Z	B, D	S	P, R	DAL, SHA, TEP
RWR78#24R9%&	24.9	10	S, W, N, Z	B, D, F	S	P, R	DAL, SHA, TEP
RWR78#25R2%&	25.2	10	S, W, N, Z	B, D	S	P, R	DAL, SHA, TEP
RWR78#25R5%&	25.5	10	S, W, N, Z	B, D, F	S	P, R	DAL, SHA, TEP
RWR78#25R8%&	25.8	10	S, W, N, Z	B, D	S	P, R	DAL, SHA, TEP
RWR78#26R1%&	26.1	10	S, W, N, Z	B, D, F	S	P, R	DAL, SHA, TEP
RWR78#26R4%&	26.4	10	S, W, N, Z	B, D	S	P, R	DAL, SHA, TEP
RWR78#26R7%&	26.7	10	S, W, N, Z	B, D, F	S	P, R	DAL, SHA, TEP
RWR78#27R1%&	27.1	10	S, W, N, Z	B, D	S	P, R	DAL, SHA, TEP
RWR78#27R4%&	27.4	10	S, W, N, Z	B, D, F	S	P, R	DAL, SHA, TEP
RWR78#27R7%&	27.7	10	S, W, N, Z	B, D	S	P, R	DAL, SHA, TEP
RWR78#28R0%&	28.0	10	S, W, N, Z	B, D, F	S	P, R	DAL, SHA, TEP
RWR78#28R4%&	28.4	10	S, W, N, Z	B, D	S	P, R	DAL, SHA, TEP
RWR78#28R7%&	28.7	10	S, W, N, Z	B, D, F	S	P, R	DAL, SHA, TEP
RWR78#29R1%&	29.1	10	S, W, N, Z	B, D	S	P, R	DAL, SHA, TEP
RWR78#29R4%&	29.4	10	S, W, N, Z	B, D, F	S	P, R	DAL, SHA, TEP
RWR78#29R8%&	29.8	10	S, W, N, Z	B, D	S	P, R	DAL, SHA, TEP
RWR78#30R1%&	30.1	10	S, W, N, Z	B, D, F	S	P, R	DAL, SHA, TEP
RWR78#30R5%&	30.5	10	S, W, N, Z	B, D	S	P, R	DAL, SHA, TEP
RWR78#30R9%&	30.9	10	S, W, N, Z	B, D, F	S	P, R	DAL, SHA, TEP
RWR78#31R2%&	31.2	10	S, W, N, Z	B, D	S	P, R	DAL, SHA, TEP
RWR78#31R6%&	31.6	10	S, W, N, Z	B, D, F	S	P, R	DAL, SHA, TEP
RWR78#32R0%&	32.0	10	S, W, N, Z	B, D	S	P, R	DAL, SHA, TEP
RWR78#32R4%&	32.4	10	S, W, N, Z	B, D, F	S	P, R	DAL, SHA, TEP
RWR78#32R8%&	32.8	10	S, W, N, Z	B, D	S	P, R	DAL, SHA, TEP
RWR78#33R2%&	33.2	10	S, W, N, Z	B, D, F	S	P, R	DAL, SHA, TEP
RWR78#33R6%&	33.6	10	S, W, N, Z	B, D	S	P, R	DAL, SHA, TEP
RWR78#34R0%&	34.0	10	S, W, N, Z	B, D, F	S	P, R	DAL, SHA, TEP

RWR78#34R4%&	34.4	10	S, W, N, Z	B, D	S	P, R	DAL, SHA, TEP
RWR78#34R8%&	34.8	10	S, W, N, Z	B, D, F	S	P, R	DAL, SHA, TEP
RWR78#35R2%&	35.2	10	S, W, N, Z	B, D	S	P, R	DAL, SHA, TEP
RWR78#35R7%&	35.7	10	S, W, N, Z	B, D, F	S	P, R	DAL, SHA, TEP
RWR78#36R1%&	36.1	10	S, W, N, Z	B, D	S	P, R	DAL, SHA, TEP
RWR78#36R5%&	36.5	10	S, W, N, Z	B, D, F	S	P, R	DAL, SHA, TEP
RWR78#37R0%&	37.0	10	S, W, N, Z	B, D	S	P, R	DAL, SHA, TEP
RWR78#37R4%&	37.4	10	S, W, N, Z	B, D, F	S	P, R	DAL, SHA, TEP
RWR78#37R9%&	37.9	10	S, W, N, Z	B, D	S	P, R	DAL, SHA, TEP
RWR78#38R3%&	38.3	10	S, W, N, Z	B, D, F	S	P, R	DAL, SHA, TEP
RWR78#38R8%&	38.8	10	S, W, N, Z	B, D	S	P, R	DAL, SHA, TEP
RWR78#39R2%&	39.2	10	S, W, N, Z	B, D, F	S	P, R	DAL, SHA, TEP
RWR78#39R7%&	39.7	10	S, W, N, Z	B, D	S	P, R	DAL, SHA, TEP
RWR78#40R2%&	40.2	10	S, W, N, Z	B, D, F	S	P, R	DAL, SHA, TEP
RWR78#40R7%&	40.7	10	S, W, N, Z	B, D	S	P, R	DAL, SHA, TEP
RWR78#41R2%&	41.2	10	S, W, N, Z	B, D, F	S	P, R	DAL, SHA, TEP
RWR78#41R7%&	41.7	10	S, W, N, Z	B, D	S	P, R	DAL, SHA, TEP
RWR78#42R2%&	42.2	10	S, W, N, Z	B, D, F	S	P, R	DAL, SHA, TEP
RWR78#42R7%&	42.7	10	S, W, N, Z	B, D	S	P, R	DAL, SHA, TEP
RWR78#43R2%&	43.2	10	S, W, N, Z	B, D, F	S	P, R	DAL, SHA, TEP
RWR78#43R7%&	43.7	10	S, W, N, Z	B, D	S	P, R	DAL, SHA, TEP
RWR78#44R2%&	44.2	10	S, W, N, Z	B, D, F	S	P, R	DAL, SHA, TEP
RWR78#44R8%&	44.8	10	S, W, N, Z	B, D	S	P, R	DAL, SHA, TEP
RWR78#45R3%&	45.3	10	S, W, N, Z	B, D, F	S	P, R	DAL, SHA, TEP
RWR78#45R9%&	45.9	10	S, W, N, Z	B, D	S	P, R	DAL, SHA, TEP
RWR78#46R4%&	46.4	10	S, W, N, Z	B, D, F	S	P, R	DAL, SHA, TEP
RWR78#47R0%&	47.0	10	S, W, N, Z	B, D	S	P, R	DAL, SHA, TEP
RWR78#47R5%&	47.5	10	S, W, N, Z	B, D, F	S	P, R	DAL, SHA, TEP
RWR78#48R1%&	48.1	10	S, W, N, Z	B, D	S	P, R	DAL, SHA, TEP
RWR78#48R7%&	48.7	10	S, W, N, Z	B, D, F	S	P, R	DAL, SHA, TEP
RWR78#49R3%&	49.3	10	S, W, N, Z	B, D	S	P, R	DAL, SHA, TEP
RWR78#49R9%&	49.9	10	S, W, N, Z	B, D, F	S	P, R	DAL, SHA, TEP
RWR78#50R5%&	50.5	10	S, W, N, Z	B, D	S	P, R	DAL, SHA, TEP
RWR78#51R1%&	51.1	10	S, W, N, Z	B, D, F	S	P, R	DAL, SHA, TEP
RWR78#51R7%&	51.7	10	S, W, N, Z	B, D	S	P, R	DAL, SHA, TEP
RWR78#52R3%&	52.3	10	S, W, N, Z	B, D, F	S	P, R	DAL, SHA, TEP
RWR78#53R0%&	53.0	10	S, W, N, Z	B, D	S	P, R	DAL, SHA, TEP
RWR78#53R6%&	53.6	10	S, W, N, Z	B, D, F	S	P, R	DAL, SHA, TEP
RWR78#54R2%&	54.2	10	S, W, N, Z	B, D	S	P, R	DAL, SHA, TEP
RWR78#54R9%&	54.9	10	S, W, N, Z	B, D, F	S	P, R	DAL, SHA, TEP
RWR78#55R6%&	55.6	10	S, W, N, Z	B, D	S	P, R	DAL, SHA, TEP
RWR78#56R2%&	56.2	10	S, W, N, Z	B, D, F	S	P, R	DAL, SHA, TEP
RWR78#56R9%&	56.9	10	S, W, N, Z	B, D	S	P, R	DAL, SHA, TEP
RWR78#57R6%&	57.6	10	S, W, N, Z	B, D, F	S	P, R	DAL, SHA, TEP
RWR78#58R3%&	58.3	10	S, W, N, Z	B, D	S	P, R	DAL, SHA, TEP
RWR78#59R0%&	59.0	10	S, W, N, Z	B, D, F	S	P, R	DAL, SHA, TEP
RWR78#59R7%&	59.7	10	S, W, N, Z	B, D	S	P, R	DAL, SHA, TEP

RWR78#60R4%&	60.4	10	S, W, N, Z	B, D, F	S	P, R	DAL, SHA, TEP
RWR78#61R2%&	61.2	10	S, W, N, Z	B, D	S	P, R	DAL, SHA, TEP
RWR78#61R9%&	61.9	10	S, W, N, Z	B, D, F	S	P, R	DAL, SHA, TEP
RWR78#62R6%&	62.6	10	S, W, N, Z	B, D	S	P, R	DAL, SHA, TEP
RWR78#63R4%&	63.4	10	S, W, N, Z	B, D, F	S	P, R	DAL, SHA, TEP
RWR78#64R2%&	64.2	10	S, W, N, Z	B, D	S	P, R	DAL, SHA, TEP
RWR78#64R9%&	64.9	10	S, W, N, Z	B, D, F	S	P, R	DAL, SHA, TEP
RWR78#65R7%&	65.7	10	S, W, N, Z	B, D	S	P, R	DAL, SHA, TEP
RWR78#66R5%&	66.5	10	S, W, N, Z	B, D, F	S	P, R	DAL, SHA, TEP
RWR78#67R3%&	67.3	10	S, W, N, Z	B, D	S	P, R	DAL, SHA, TEP
RWR78#68R1%&	68.1	10	S, W, N, Z	B, D, F	S	P, R	DAL, SHA, TEP
RWR78#69R0%&	69.0	10	S, W, N, Z	B, D	S	P, R	DAL, SHA, TEP
RWR78#69R8%&	69.8	10	S, W, N, Z	B, D, F	S	P, R	DAL, SHA, TEP
RWR78#70R6%&	70.6	10	S, W, N, Z	B, D	S	P, R	DAL, SHA, TEP
RWR78#71R5%&	71.5	10	S, W, N, Z	B, D, F	S	P, R	DAL, SHA, TEP
RWR78#72R3%&	72.3	10	S, W, N, Z	B, D	S	P, R	DAL, SHA, TEP
RWR78#73R2%&	73.2	10	S, W, N, Z	B, D, F	S	P, R	DAL, SHA, TEP
RWR78#74R1%&	74.1	10	S, W, N, Z	B, D	S	P, R	DAL, SHA, TEP
RWR78#75R0%&	75.0	10	S, W, N, Z	B, D, F	S	P, R	DAL, SHA, TEP
RWR78#75R9%&	75.9	10	S, W, N, Z	B, D	S	P, R	DAL, SHA, TEP
RWR78#76R8%&.	76.8	10	S, W, N, Z	B, D, F	S	P, R	DAL, SHA, TEP
RWR78#77R7%&.	77.7	10	S, W, N, Z	B, D	S	P, R	DAL, SHA, TEP
RWR78#78R7%&	78.7	10	S, W, N, Z	B, D, F	S	P, R	DAL, SHA, TEP
RWR78#79R6%&	79.6	10	S, W, N, Z	B, D	S	P, R	DAL, SHA, TEP
RWR78#80R6%&	80.6	10	S, W, N, Z	B, D, F	S	P, R	DAL, SHA, TEP
RWR78#81R6%&	81.6	10	S, W, N, Z	B, D	S	P, R	DAL, SHA, TEP
RWR78#82R5%&	82.5	10	S, W, N, Z	B, D, F	S	P, R	DAL, SHA, TEP
RWR78#83R5%&	83.5	10	S, W, N, Z	B, D	S	P, R	DAL, SHA, TEP
RWR78#84R5%&	84.5	10	S, W, N, Z	B, D, F	S	P, R	DAL, SHA, TEP
RWR78#85R6%&	85.6	10	S, W, N, Z	B, D	S	P, R	DAL, SHA, TEP
RWR78#86R6%&	86.6	10	S, W, N, Z	B, D, F	S	P, R	DAL, SHA, TEP
RWR78#87R6%&	87.6	10	S, W, N, Z	B, D	S	P, R	DAL, SHA, TEP
RWR78#88R7%&	88.7	10	S, W, N, Z	B, D, F	S	P, R	DAL, SHA, TEP
RWR78#89R8%&	89.8	10	S, W, N, Z	B, D	S	P, R	DAL, SHA, TEP
RWR78#90R9%&	90.9	10	S, W, N, Z	B, D, F	S	P, R	DAL, SHA, TEP
RWR78#92R0%&	92.0	10	S, W, N, Z	B, D	S	P, R	DAL, SHA, TEP
RWR78#93R1%&	93.1	10	S, W, N, Z	B, D, F	S	P, R	DAL, SHA, TEP
RWR78#94R2%&	94.2	10	S, W, N, Z	B, D	S	P, R	DAL, SHA, TEP
RWR78#95R3%&	95.3	10	S, W, N, Z	B, D, F	S	P, R	DAL, SHA, TEP
RWR78#96R5%&	96.5	10	S, W, N, Z	B, D	S	P, R	DAL, SHA, TEP
RWR78#97R6%&	97.6	10	S, W, N, Z	B, D, F	S	P, R	DAL, SHA, TEP
RWR78#98R8%&	98.8	10	S, W, N, Z	B, D	S	P, R	DAL, SHA, TEP
RWR78#1000%&	100	10	S, W, N, Z	B, D, F	S	P, R	DAL, SHA, TEP
RWR78#1010%&	101	10	S, W, N, Z	B, D	S	P, R	DAL, SHA, TEP
RWR78#1020%&	102	10	S, W, N, Z	B, D, F	S	P, R	DAL, SHA, TEP
RWR78#1040%&	104	10	S, W, N, Z	B, D	S	P, R	DAL, SHA, TEP
RWR78#1050%&	105	10	S, W, N, Z	B, D, F	S	P, R	DAL, SHA, TEP

RWR78#1060%&	106	10	S, W, N, Z	B, D	S	P, R	DAL, SHA, TEP
RWR78#1070%&	107	10	S, W, N, Z	B, D, F	S	P, R	DAL, SHA, TEP
RWR78#1090%&	109	10	S, W, N, Z	B, D	S	P, R	DAL, SHA, TEP
RWR78#1100%&	110	10	S, W, N, Z	B, D, F	S	P, R	DAL, SHA, TEP
RWR78#1110%&	111	10	S, W, N, Z	B, D	S	P, R	DAL, SHA, TEP
RWR78#1130%&	113	10	S, W, N, Z	B, D, F	S	P, R	DAL, SHA, TEP
RWR78#1140%&	114	10	S, W, N, Z	B, D	S	P, R	DAL, SHA, TEP
RWR78#1150%&	115	10	S, W, N, Z	B, D, F	S	P, R	DAL, SHA, TEP
RWR78#1170%&	117	10	S, W, N, Z	B, D	S	P, R	DAL, SHA, TEP
RWR78#1180%&	118	10	S, W, N, Z	B, D, F	S	P, R	DAL, SHA, TEP
RWR78#1200%&	120	10	S, W, N, Z	B, D	S	P, R	DAL, SHA, TEP
RWR78#1210%&	121	10	S, W, N, Z	B, D, F	S	P, R	DAL, SHA, TEP
RWR78#1230%&	123	10	S, W, N, Z	B, D	S	P, R	DAL, SHA, TEP
RWR78#1240%&	124	10	S, W, N, Z	B, D, F	S	P, R	DAL, SHA, TEP
RWR78#1260%&	126	10	S, W, N, Z	B, D	S	P, R	DAL, SHA, TEP
RWR78#1270%&	127	10	S, W, N, Z	B, D, F	S	P, R	DAL, SHA, TEP
RWR78#1290%&	129	10	S, W, N, Z	B, D	S	P, R	DAL, SHA, TEP
RWR78#1300%&	130	10	S, W, N, Z	B, D, F	S	P, R	DAL, SHA, TEP
RWR78#1320%&	132	10	S, W, N, Z	B, D	S	P, R	DAL, SHA, TEP
RWR78#1330%&	133	10	S, W, N, Z	B, D, F	S	P, R	DAL, SHA, TEP
RWR78#1350%&	135	10	S, W, N, Z	B, D	S	P, R	DAL, SHA, TEP
RWR78#1370%&	137	10	S, W, N, Z	B, D, F	S	P, R	DAL, SHA, TEP
RWR78#1380%&	138	10	S, W, N, Z	B, D	S	P, R	DAL, SHA, TEP
RWR78#1400%&	140	10	S, W, N, Z	B, D, F	S	P, R	DAL, SHA, TEP
RWR78#1420%&	142	10	S, W, N, Z	B, D	S	P, R	DAL, SHA, TEP
RWR78#1430%&	143	10	S, W, N, Z	B, D, F	S	P, R	DAL, SHA, TEP
RWR78#1450%&	145	10	S, W, N, Z	B, D	S	P, R	DAL, SHA, TEP
RWR78#1470%&	147	10	S, W, N, Z	B, D, F	S	P, R	DAL, SHA, TEP
RWR78#1490%&	149	10	S, W, N, Z	B, D	S	P, R	DAL, SHA, TEP
RWR78#1500%&	150	10	S, W, N, Z	B, D, F	S	P, R	DAL, SHA, TEP
RWR78#1520%&	152	10	S, W, N, Z	B, D	S	P, R	DAL, SHA, TEP
RWR78#1540%&	154	10	S, W, N, Z	B, D, F	S	P, R	DAL, SHA, TEP
RWR78#1560%&	156	10	S, W, N, Z	B, D	S	P, R	DAL, SHA, TEP
RWR78#1580%&	158	10	S, W, N, Z	B, D, F	S	P, R	DAL, SHA, TEP
RWR78#1600%&	160	10	S, W, N, Z	B, D	S	P, R	DAL, SHA, TEP
RWR78#1620%&	162	10	S, W, N, Z	B, D, F	S	P, R	DAL, SHA, TEP
RWR78#1640%&	164	10	S, W, N, Z	B, D	S	P, R	DAL, SHA, TEP
RWR78#1650%&	165	10	S, W, N, Z	B, D, F	S	P, R	DAL, SHA, TEP
RWR78#1670%&	167	10	S, W, N, Z	B, D	S	P, R	DAL, SHA, TEP
RWR78#1690%&	169	10	S, W, N, Z	B, D, F	S	P, R	DAL, SHA, TEP
RWR78#1720%&	172	10	S, W, N, Z	B, D	S	P, R	DAL, SHA, TEP
RWR78#1740%&	174	10	S, W, N, Z	B, D, F	S	P, R	DAL, SHA, TEP
RWR78#1760%&	176	10	S, W, N, Z	B, D	S	P, R	DAL, SHA, TEP
RWR78#1780%&	178	10	S, W, N, Z	B, D, F	S	P, R	DAL, SHA, TEP
RWR78#1800%&	180	10	S, W, N, Z	B, D, F	S	P, R	DAL, SHA, TEP
RWR78#1820%&	182	10	S, W, N, Z	B, D, F	S	P, R	DAL, SHA, TEP
RWR78#1840%&	184	10	S, W, N, Z	B, D	S	P, R	DAL, SHA, TEP

RWR78#1870%&	187	10	S, W, N, Z	B, D, F	S	P, R	DAL, SHA, TEP
RWR78#1890%&	189	10	S, W, N, Z	B, D	S	P, R	DAL, SHA, TEP
RWR78#1910%&	191	10	S, W, N, Z	B, D, F	S	P, R	DAL, SHA, TEP
RWR78#1930%&	193	10	S, W, N, Z	B, D	S	P, R	DAL, SHA, TEP
RWR78#1960%&	196	10	S, W, N, Z	B, D, F	S	P, R	DAL, SHA, TEP
RWR78#1980%&	198	10	S, W, N, Z	B, D	S	P, R	DAL, SHA, TEP
RWR78#2000%&	200	10	S, W, N, Z	B, D, F	S	P, R	DAL, SHA, TEP
RWR78#2030%&	203	10	S, W, N, Z	B, D	S	P, R	DAL, SHA, TEP
RWR78#2050%&	205	10	S, W, N, Z	B, D, F	S	P, R	DAL, SHA, TEP
RWR78#2080%&	208	10	S, W, N, Z	B, D	S	P, R	DAL, SHA, TEP
RWR78#2100%&	210	10	S, W, N, Z	B, D, F	S	P, R	DAL, SHA, TEP
RWR78#2130%&	213	10	S, W, N, Z	B, D	S	P, R	DAL, SHA, TEP
RWR78#2150%&	215	10	S, W, N, Z	B, D, F	S	P, R	DAL, SHA, TEP
RWR78#2180%&	218	10	S, W, N, Z	B, D	S	P, R	DAL, SHA, TEP
RWR78#2210%&	221	10	S, W, N, Z	B, D, F	S	P, R	DAL, SHA, TEP
RWR78#2230%&	223	10	S, W, N, Z	B, D	S	P, R	DAL, SHA, TEP
RWR78#2260%&	226	10	S, W, N, Z	B, D, F	S	P, R	DAL, SHA, TEP
RWR78#2290%&	229	10	S, W, N, Z	B, D	S	P, R	DAL, SHA, TEP
RWR78#2320%&	232	10	S, W, N, Z	B, D, F	S	P, R	DAL, SHA, TEP
RWR78#2340%&	234	10	S, W, N, Z	B, D	S	P, R	DAL, SHA, TEP
RWR78#2370%&	237	10	S, W, N, Z	B, D, F	S	P, R	DAL, SHA, TEP
RWR78#2400%&	240	10	S, W, N, Z	B, D	S	P, R	DAL, SHA, TEP
RWR78#2430%&	243	10	S, W, N, Z	B, D, F	S	P, R	DAL, SHA, TEP
RWR78#2460%&	246	10	S, W, N, Z	B, D	S	P, R	DAL, SHA, TEP
RWR78#2490%&	249	10	S, W, N, Z	B, D, F	S	P, R	DAL, SHA, TEP
RWR78#2520%&	252	10	S, W, N, Z	B, D	S	P, R	DAL, SHA, TEP
RWR78#2550%&	255	10	S, W, N, Z	B, D, F	S	P, R	DAL, SHA, TEP
RWR78#2580%&	258	10	S, W, N, Z	B, D	S	P, R	DAL, SHA, TEP
RWR78#2610%&	261	10	S, W, N, Z	B, D, F	S	P, R	DAL, SHA, TEP
RWR78#2640%&	264	10	S, W, N, Z	B, D	S	P, R	DAL, SHA, TEP
RWR78#2670%&	267	10	S, W, N, Z	B, D, F	S	P, R	DAL, SHA, TEP
RWR78#2710%&	271	10	S, W, N, Z	B, D	S	P, R	DAL, SHA, TEP
RWR78#2740%&	274	10	S, W, N, Z	B, D, F	S	P, R	DAL, SHA, TEP
RWR78#2770%&	277	10	S, W, N, Z	B, D	S	P, R	DAL, SHA, TEP
RWR78#2800%&	280	10	S, W, N, Z	B, D, F	S	P, R	DAL, SHA, TEP
RWR78#2840%&	284	10	S, W, N, Z	B, D	S	P, R	DAL, SHA, TEP
RWR78#2870%&	287	10	S, W, N, Z	B, D, F	S	P, R	DAL, SHA, TEP
RWR78#2910%&	291	10	S, W, N, Z	B, D	S	P, R	DAL, SHA, TEP
RWR78#2940%&	294	10	S, W, N, Z	B, D, F	S	P, R	DAL, SHA, TEP
RWR78#2980%&	298	10	S, W, N, Z	B, D	S	P, R	DAL, SHA, TEP
RWR78#3010%&	301	10	S, W, N, Z	B, D, F	S	P, R	DAL, SHA, TEP
RWR78#3050%&	305	10	S, W, N, Z	B, D	S	P, R	DAL, SHA, TEP
RWR78#3090%&	309	10	S, W, N, Z	B, D, F	S	P, R	DAL, SHA, TEP
RWR78#3120%&	312	10	S, W, N, Z	B, D	S	P, R	DAL, SHA, TEP
RWR78#3160%&	316	10	S, W, N, Z	B, D, F	S	P, R	DAL, SHA, TEP
RWR78#3200%&	320	10	S, W, N, Z	B, D	S	P, R	DAL, SHA, TEP
RWR78#3240%&	324	10	S, W, N, Z	B, D, F	S	P, R	DAL, SHA, TEP

RWR78#3280%&	328	10	S, W, N, Z	B, D	S	P, R	DAL, SHA, TEP
RWR78#3320%&	332	10	S, W, N, Z	B, D, F	S	P, R	DAL, SHA, TEP
RWR78#3360%&	336	10	S, W, N, Z	B, D	S	P, R	DAL, SHA, TEP
RWR78#3400%&	340	10	S, W, N, Z	B, D, F	S	P, R	DAL, SHA, TEP
RWR78#3440%&	344	10	S, W, N, Z	B, D	S	P, R	DAL, SHA, TEP
RWR78#3480%&	348	10	S, W, N, Z	B, D, F	S	P, R	DAL, SHA, TEP
RWR78#3520%&	352	10	S, W, N, Z	B, D	S	P, R	DAL, SHA, TEP
RWR78#3570%&	357	10	S, W, N, Z	B, D, F	S	P, R	DAL, SHA, TEP
RWR78#3610%&	361	10	S, W, N, Z	B, D	S	P, R	DAL, SHA, TEP
RWR78#3650%&	365	10	S, W, N, Z	B, D, F	S	P, R	DAL, SHA, TEP
RWR78#3700%&	370	10	S, W, N, Z	B, D	S	P, R	DAL, SHA, TEP
RWR78#3740%&	374	10	S, W, N, Z	B, D, F	S	P, R	DAL, SHA, TEP
RWR78#3790%&	379	10	S, W, N, Z	B, D	S	P, R	DAL, SHA, TEP
RWR78#3830%&	383	10	S, W, N, Z	B, D, F	S	P, R	DAL, SHA, TEP
RWR78#3880%&	388	10	S, W, N, Z	B, D	S	P, R	DAL, SHA, TEP
RWR78#3920%&	392	10	S, W, N, Z	B, D, F	S	P, R	DAL, SHA, TEP
RWR78#3970%&	397	10	S, W, N, Z	B, D	S	P, R	DAL, SHA, TEP
RWR78#4020%&	402	10	S, W, N, Z	B, D, F	S	P, R	DAL, SHA, TEP
RWR78#4070%&	407	10	S, W, N, Z	B, D	S	P, R	DAL, SHA, TEP
RWR78#4120%&	412	10	S, W, N, Z	B, D, F	S	P, R	DAL, SHA, TEP
RWR78#4170%&	417	10	S, W, N, Z	B, D	S	P, R	DAL, SHA, TEP
RWR78#4220%&	422	10	S, W, N, Z	B, D, F	S	P, R	DAL, SHA, TEP
RWR78#4270%&	427	10	S, W, N, Z	B, D	S	P, R	DAL, SHA, TEP
RWR78#4320%&	432	10	S, W, N, Z	B, D, F	S	P, R	DAL, SHA, TEP
RWR78#4370%&	437	10	S, W, N, Z	B, D	S	P, R	DAL, SHA, TEP
RWR78#4420%&	442	10	S, W, N, Z	B, D, F	S	P, R	DAL, SHA, TEP
RWR78#4480%&	448	10	S, W, N, Z	B, D	S	P, R	DAL, SHA, TEP
RWR78#4530%&	453	10	S, W, N, Z	B, D, F	S	P, R	DAL, SHA, TEP
RWR78#4590%&	459	10	S, W, N, Z	B, D	S	P, R	DAL, SHA, TEP
RWR78#4640%&	464	10	S, W, N, Z	B, D, F	S	P, R	DAL, SHA, TEP
RWR78#4700%&	470	10	S, W, N, Z	B, D	S	P, R	DAL, SHA, TEP
RWR78#4750%&	475	10	S, W, N, Z	B, D, F	S	P, R	DAL, SHA, TEP
RWR78#4810%&	481	10	S, W, N, Z	B, D	S	P, R	DAL, SHA, TEP
RWR78#4870%&	487	10	S, W, N, Z	B, D, F	S	P, R	DAL, SHA, TEP
RWR78#4930%&	493	10	S, W, N, Z	B, D	S	P, R	DAL, SHA, TEP
RWR78#4990%&	499	10	S, W, N, Z	B, D, F	S	P, R	DAL, SHA, TEP
RWR78#5050%&	505	10	S, W, N, Z	B, D	S	P, R	DAL, SHA, TEP
RWR78#5110%&	511	10	S, W, N, Z	B, D, F	S	P, R	DAL, SHA, TEP
RWR78#5170%&	517	10	S, W, N, Z	B, D	S	P, R	DAL, SHA, TEP
RWR78#5230%&	523	10	S, W, N, Z	B, D, F	S	P, R	DAL, SHA, TEP
RWR78#5300%&	530	10	S, W, N, Z	B, D	S	P, R	DAL, SHA, TEP
RWR78#5360%&	536	10	S, W, N, Z	B, D, F	S	P, R	DAL, SHA, TEP
RWR78#5420%&	542	10	S, W, N, Z	B, D	S	P, R	DAL, SHA, TEP
RWR78#5490%&	549	10	S, W, N, Z	B, D, F	S	P, R	DAL, SHA, TEP
RWR78#5560%&	556	10	S, W, N, Z	B, D	S	P, R	DAL, SHA, TEP
RWR78#5620%&	562	10	S, W, N, Z	B, D, F	S	P, R	DAL, SHA, TEP
RWR78#5690%&	569	10	S, W, N, Z	B, D	S	P, R	DAL, SHA, TEP

RWR78#5760%&	576	10	S, W, N, Z	B, D, F	S	P, R	DAL, SHA, TEP
RWR78#5830%&	583	10	S, W, N, Z	B, D	S	P, R	DAL, SHA, TEP
RWR78#5900%&	590	10	S, W, N, Z	B, D, F	S	P, R	DAL, SHA, TEP
RWR78#5970%&	597	10	S, W, N, Z	B, D	S	P, R	DAL, SHA, TEP
RWR78#6040%&	604	10	S, W, N, Z	B, D, F	S	P, R	DAL, SHA, TEP
RWR78#6120%&	612	10	S, W, N, Z	B, D	S	P, R	DAL, SHA, TEP
RWR78#6190%&	619	10	S, W, N, Z	B, D, F	S	P, R	DAL, SHA, TEP
RWR78#6260%&	626	10	S, W, N, Z	B, D	S	P, R	DAL, SHA, TEP
RWR78#6340%&	634	10	S, W, N, Z	B, D, F	S	P, R	DAL, SHA, TEP
RWR78#6420%&	642	10	S, W, N, Z	B, D	S	P, R	DAL, SHA, TEP
RWR78#6490%&	649	10	S, W, N, Z	B, D, F	S	P, R	DAL, SHA, TEP
RWR78#6570%&	657	10	S, W, N, Z	B, D	S	P, R	DAL, SHA, TEP
RWR78#6650%&	665	10	S, W, N, Z	B, D, F	S	P, R	DAL, SHA, TEP
RWR78#6730%&	673	10	S, W, N, Z	B, D	S	P, R	DAL, SHA, TEP
RWR78#6810%&	681	10	S, W, N, Z	B, D, F	S	P, R	DAL, SHA, TEP
RWR78#6900%&	690	10	S, W, N, Z	B, D	S	P, R	DAL, SHA, TEP
RWR78#6980%&	698	10	S, W, N, Z	B, D, F	S	P, R	DAL, SHA, TEP
RWR78#7060%&	706	10	S, W, N, Z	B, D	S	P, R	DAL, SHA, TEP
RWR78#7150%&	715	10	S, W, N, Z	B, D, F	S	P, R	DAL, SHA, TEP
RWR78#7230%&	723	10	S, W, N, Z	B, D	S	P, R	DAL, SHA, TEP
RWR78#7320%&	732	10	S, W, N, Z	B, D, F	S	P, R	DAL, SHA, TEP
RWR78#7410%&	741	10	S, W, N, Z	B, D	S	P, R	DAL, SHA, TEP
RWR78#7500%&	750	10	S, W, N, Z	B, D, F	S	P, R	DAL, SHA, TEP
RWR78#7590%&	759	10	S, W, N, Z	B, D	S	P, R	DAL, SHA, TEP
RWR78#7680%&	768	10	S, W, N, Z	B, D, F	S	P, R	DAL, SHA, TEP
RWR78#7770%&	777	10	S, W, N, Z	B, D	S	P, R	DAL, SHA, TEP
RWR78#7870%&	787	10	S, W, N, Z	B, D, F	S	P, R	DAL, SHA, TEP
RWR78#7960%&	796	10	S, W, N, Z	B, D	S	P, R	DAL, SHA, TEP
RWR78#8060%&	806	10	S, W, N, Z	B, D, F	S	P, R	DAL, SHA, TEP
RWR78#8160%&	816	10	S, W, N, Z	B, D	S	P, R	DAL, SHA, TEP
RWR78#8250%&	825	10	S, W, N, Z	B, D, F	S	P, R	DAL, SHA, TEP
RWR78#8350%&	835	10	S, W, N, Z	B, D	S	P, R	DAL, SHA, TEP
RWR78#8450%&	845	10	S, W, N, Z	B, D, F	S	P, R	DAL, SHA, TEP
RWR78#8560%&	856	10	S, W, N, Z	B, D	S	P, R	DAL, SHA, TEP
RWR78#8660%&	866	10	S, W, N, Z	B, D, F	S	P, R	DAL, SHA, TEP
RWR78#8760%&	876	10	S, W, N, Z	B, D	S	P, R	DAL, SHA, TEP
RWR78#8870%&	887	10	S, W, N, Z	B, D, F	S	P, R	DAL, SHA, TEP
RWR78#8980%&	898	10	S, W, N, Z	B, D	S	P, R	DAL, SHA, TEP
RWR78#9090%&	909	10	S, W, N, Z	B, D, F	S	P, R	DAL, SHA, TEP
RWR78#9200%&	920	10	S, W, N, Z	B, D	S	P, R	DAL, SHA, TEP
RWR78#9310%&	931	10	S, W, N, Z	B, D, F	S	P, R	DAL, SHA, TEP
RWR78#9420%&	942	10	S, W, N, Z	B, D	S	P, R	DAL, SHA, TEP
RWR78#9530%&	953	10	S, W, N, Z	B, D, F	S	P, R	DAL, SHA, TEP
RWR78#9650%&	965	10	S, W, N, Z	B, D	S	P, R	DAL, SHA, TEP
RWR78#9760%&	976	10	S, W, N, Z	B, D, F	S	P, R	DAL, SHA, TEP
RWR78#9880%&	988	10	S, W, N, Z	B, D	S	P, R	DAL, SHA, TEP
RWR78#1001%&	1000	10	S, W, N, Z	B, D, F	S	P, R	DAL, SHA, TEP

RWR78#1011%&	1010	10	S, W, N, Z	B, D	S	P, R	DAL, SHA, TEP
RWR78#1021%&	1020	10	S, W, N, Z	B, D, F	S	P, R	DAL, SHA, TEP
RWR78#1041%&	1040	10	S, W, N, Z	B, D	S	P, R	DAL, SHA, TEP
RWR78#1051%&	1050	10	S, W, N, Z	B, D, F	S	P, R	DAL, SHA, TEP
RWR78#1061%&	1060	10	S, W, N, Z	B, D	S	P, R	DAL, SHA, TEP
RWR78#1071%&	1070	10	S, W, N, Z	B, D, F	S	P, R	DAL, SHA, TEP
RWR78#1091%&	1090	10	S, W, N, Z	B, D	S	P, R	DAL, SHA, TEP
RWR78#1101%&	1100	10	S, W, N, Z	B, D, F	S	P, R	DAL, SHA, TEP
RWR78#1111%&	1110	10	S, W, N, Z	B, D	S	P, R	DAL, SHA, TEP
RWR78#1131%&	1130	10	S, W, N, Z	B, D, F	S	P, R	DAL, SHA, TEP
RWR78#1141%&	1140	10	S, W, N, Z	B, D	S	P, R	DAL, SHA, TEP
RWR78#1151%&	1150	10	S, W, N, Z	B, D, F	S	P, R	DAL, SHA, TEP
RWR78#1171%&	1170	10	S, W, N, Z	B, D	S	P, R	DAL, SHA, TEP
RWR78#1181%&	1180	10	S, W, N, Z	B, D, F	S	P, R	DAL, SHA, TEP
RWR78#1201%&	1200	10	S, W, N, Z	B, D	S	P, R	DAL, SHA, TEP
RWR78#1211%&	1210	10	S, W, N, Z	B, D, F	S	P, R	DAL, SHA, TEP
RWR78#1231%&	1230	10	S, W, N, Z	B, D	S	P, R	DAL, SHA, TEP
RWR78#1241%&	1240	10	S, W, N, Z	B, D, F	S	P, R	DAL, SHA, TEP
RWR78#1261%&	1260	10	S, W, N, Z	B, D	S	P, R	DAL, SHA, TEP
RWR78#1271%&	1270	10	S, W, N, Z	B, D, F	S	P, R	DAL, SHA, TEP
RWR78#1291%&	1290	10	S, W, N, Z	B, D	S	P, R	DAL, SHA, TEP
RWR78#1301%&	1300	10	S, W, N, Z	B, D, F	S	P, R	DAL, SHA, TEP
RWR78#1321%&	1320	10	S, W, N, Z	B, D	S	P, R	DAL, SHA, TEP
RWR78#1331%&	1330	10	S, W, N, Z	B, D, F	S	P, R	DAL, SHA, TEP
RWR78#1351%&	1350	10	S, W, N, Z	B, D	S	P, R	DAL, SHA, TEP
RWR78#1371%&	1370	10	S, W, N, Z	B, D, F	S	P, R	DAL, SHA, TEP
RWR78#1381%&	1380	10	S, W, N, Z	B, D	S	P, R	DAL, SHA, TEP
RWR78#1401%&	1400	10	S, W, N, Z	B, D, F	S	P, R	DAL, SHA, TEP
RWR78#1421%&	1420	10	S, W, N, Z	B, D	S	P, R	DAL, SHA, TEP
RWR78#1431%&	1430	10	S, W, N, Z	B, D, F	S	P, R	DAL, SHA, TEP
RWR78#1451%&	1450	10	S, W, N, Z	B, D	S	P, R	DAL, SHA, TEP
RWR78#1471%&	1470	10	S, W, N, Z	B, D, F	S	P, R	DAL, SHA, TEP
RWR78#1491%&	1490	10	S, W, N, Z	B, D	S	P, R	DAL, SHA, TEP
RWR78#1501%&	1500	10	S, W, N, Z	B, D, F	S	P, R	DAL, SHA, TEP
RWR78#1521%&	1520	10	S, W, N, Z	B, D	S	P, R	DAL, SHA, TEP
RWR78#1541%&	1540	10	S, W, N, Z	B, D, F	S	P, R	DAL, SHA, TEP
RWR78#1561%&	1560	10	S, W, N, Z	B, D	S	P, R	DAL, SHA, TEP
RWR78#1581%&	1580	10	S, W, N, Z	B, D, F	S	P, R	DAL, SHA, TEP
RWR78#1601%&	1600	10	S, W, N, Z	B, D	S	P, R	DAL, SHA, TEP
RWR78#1621%&	1620	10	S, W, N, Z	B, D, F	S	P, R	DAL, SHA, TEP
RWR78#1641%&	1640	10	S, W, N, Z	B, D	S	P, R	DAL, SHA, TEP
RWR78#1651%&	1650	10	S, W, N, Z	B, D, F	S	P, R	DAL, SHA, TEP
RWR78#1671%&	1670	10	S, W, N, Z	B, D	S	P, R	DAL, SHA, TEP
RWR78#1691%&	1690	10	S, W, N, Z	B, D, F	S	P, R	DAL, SHA, TEP
RWR78#1721%&	1720	10	S, W, N, Z	B, D	S	P, R	DAL, SHA, TEP
RWR78#1741%&	1740	10	S, W, N, Z	B, D, F	S	P, R	DAL, SHA, TEP
RWR78#1761%&	1760	10	S, W, N, Z	B, D	S	P, R	DAL, SHA, TEP

RWR78#1781%&	1780	10	S, W, N, Z	B, D, F	S	P, R	DAL, SHA, TEP
RWR78#1801%&	1800	10	S, W, N, Z	B, D, F	S	P, R	DAL, SHA, TEP
RWR78#1821%&	1820	10	S, W, N, Z	B, D, F	S	P, R	DAL, SHA, TEP
RWR78#1841%&	1840	10	S, W, N, Z	B, D	S	P, R	DAL, SHA, TEP
RWR78#1871%&	1870	10	S, W, N, Z	B, D, F	S	P, R	DAL, SHA, TEP
RWR78#1891%&	1890	10	S, W, N, Z	B, D	S	P, R	DAL, SHA, TEP
RWR78#1911%&	1910	10	S, W, N, Z	B, D, F	S	P, R	DAL, SHA, TEP
RWR78#1931%&	1930	10	S, W, N, Z	B, D	S	P, R	DAL, SHA, TEP
RWR78#1961%&	1960	10	S, W, N, Z	B, D, F	S	P, R	DAL, SHA, TEP
RWR78#1981%&	1980	10	S, W, N, Z	B, D	S	P, R	DAL, SHA, TEP
RWR78#2001%&	2000	10	S, W, N, Z	B, D, F	S	P, R	DAL, SHA, TEP
RWR78#2031%&	2030	10	S, W, N, Z	B, D	S	P, R	DAL, SHA, TEP
RWR78#2051%&	2050	10	S, W, N, Z	B, D, F	S	P, R	DAL, SHA, TEP
RWR78#2081%&	2080	10	S, W, N, Z	B, D	S	P, R	DAL, SHA, TEP
RWR78#2101%&	2100	10	S, W, N, Z	B, D, F	S	P, R	DAL, SHA, TEP
RWR78#2131%&	2130	10	S, W, N, Z	B, D	S	P, R	DAL, SHA, TEP
RWR78#2151%&	2150	10	S, W, N, Z	B, D, F	S	P, R	DAL, SHA, TEP
RWR78#2181%&	2180	10	S, W, N, Z	B, D	S	P, R	DAL, SHA, TEP
RWR78#2211%&	2210	10	S, W, N, Z	B, D, F	S	P, R	DAL, SHA, TEP
RWR78#2231%&	2230	10	S, W, N, Z	B, D	S	P, R	DAL, SHA, TEP
RWR78#2261%&	2260	10	S, W, N, Z	B, D, F	S	P, R	DAL, SHA, TEP
RWR78#2291%&	2290	10	S, W, N, Z	B, D	S	P, R	DAL, SHA, TEP
RWR78#2321%&	2320	10	S, W, N, Z	B, D, F	S	P, R	DAL, SHA, TEP
RWR78#2341%&	2340	10	S, W, N, Z	B, D	S	P, R	DAL, SHA, TEP
RWR78#2371%&	2370	10	S, W, N, Z	B, D, F	S	P, R	DAL, SHA, TEP
RWR78#2401%&	2400	10	S, W, N, Z	B, D	S	P, R	DAL, SHA, TEP
RWR78#2431%&	2430	10	S, W, N, Z	B, D, F	S	P, R	DAL, SHA, TEP
RWR78#2461%&	2460	10	S, W, N, Z	B, D	S	P, R	DAL, SHA, TEP
RWR78#2491%&	2490	10	S, W, N, Z	B, D, F	S	P, R	DAL, SHA, TEP
RWR78#2521%&	2520	10	S, W, N, Z	B, D	S	P, R	DAL, SHA, TEP
RWR78#2551%&	2550	10	S, W, N, Z	B, D, F	S	P, R	DAL, SHA, TEP
RWR78#2581%&	2580	10	S, W, N, Z	B, D	S	P, R	DAL, SHA, TEP
RWR78#2611%&	2610	10	S, W, N, Z	B, D, F	S	P, R	DAL, SHA, TEP
RWR78#2641%&	2640	10	S, W, N, Z	B, D	S	P, R	DAL, SHA, TEP
RWR78#2671%&	2670	10	S, W, N, Z	B, D, F	S	P, R	DAL, SHA, TEP
RWR78#2711%&	2710	10	S, W, N, Z	B, D	S	P, R	DAL, SHA, TEP
RWR78#2741%&	2740	10	S, W, N, Z	B, D, F	S	P, R	DAL, SHA, TEP
RWR78#2771%&	2770	10	S, W, N, Z	B, D	S	P, R	DAL, SHA, TEP
RWR78#2801%&	2800	10	S, W, N, Z	B, D, F	S	P, R	DAL, SHA, TEP
RWR78#2841%&	2840	10	S, W, N, Z	B, D	S	P, R	DAL, SHA, TEP
RWR78#2871%&	2870	10	S, W, N, Z	B, D, F	S	P, R	DAL, SHA, TEP
RWR78#2911%&	2910	10	S, W, N, Z	B, D	S	P, R	DAL, SHA, TEP
RWR78#2941%&	2940	10	S, W, N, Z	B, D, F	S	P, R	DAL, SHA, TEP
RWR78#2981%&	2980	10	S, W, N, Z	B, D	S	P, R	DAL, SHA, TEP
RWR78#3011%&	3010	10	S, W, N, Z	B, D, F	S	P, R	DAL, SHA, TEP
RWR78#3051%&	3050	10	S, W, N, Z	B, D	S	P, R	DAL, SHA, TEP
RWR78#3091%&	3090	10	S, W, N, Z	B, D, F	S	P, R	DAL, SHA, TEP

RWR78#3121%&	3120	10	S, W, N, Z	B, D	S	P, R	DAL, SHA, TEP
RWR78#3161%&	3160	10	S, W, N, Z	B, D, F	S	P, R	DAL, SHA, TEP
RWR78#3201%&	3200	10	S, W, N, Z	B, D	S	P, R	DAL, SHA, TEP
RWR78#3241%&	3240	10	S, W, N, Z	B, D, F	S	P, R	DAL, SHA, TEP
RWR78#3281%&	3280	10	S, W, N, Z	B, D	S	P, R	DAL, SHA, TEP
RWR78#3321%&	3320	10	S, W, N, Z	B, D, F	S	P, R	DAL, SHA, TEP
RWR78#3361%&	3360	10	S, W, N, Z	B, D	S	P, R	DAL, SHA, TEP
RWR78#3401%&	3400	10	S, W, N, Z	B, D, F	S	P, R	DAL, SHA, TEP
RWR78#3441%&	3440	10	S, W, N, Z	B, D	S	P, R	DAL, SHA, TEP
RWR78#3481%&	3480	10	S, W, N, Z	B, D, F	S	P, R	DAL, SHA, TEP
RWR78#3521%&	3520	10	S, W, N, Z	B, D	S	P, R	DAL, SHA, TEP
RWR78#3571%&	3570	10	S, W, N, Z	B, D, F	S	P, R	DAL, SHA, TEP
RWR78#3611%&	3610	10	S, W, N, Z	B, D	S	P, R	DAL, SHA, TEP
RWR78#3651%&	3650	10	S, W, N, Z	B, D, F	S	P, R	DAL, SHA, TEP
RWR78#3701%&	3700	10	S, W, N, Z	B, D	S	P, R	DAL, SHA, TEP
RWR78#3741%&	3740	10	S, W, N, Z	B, D, F	S	P, R	DAL, SHA, TEP
RWR78#3791%&	3790	10	S, W, N, Z	B, D	S	P, R	DAL, SHA, TEP
RWR78#3831%&	3830	10	S, W, N, Z	B, D, F	S	P, R	DAL, SHA, TEP
RWR78#3881%&	3880	10	S, W, N, Z	B, D	S	P, R	DAL, SHA, TEP
RWR78#3921%&	3920	10	S, W, N, Z	B, D, F	S	P, R	DAL, SHA, TEP
RWR78#3971%&	3970	10	S, W, N, Z	B, D	S	P, R	DAL, SHA, TEP
RWR78#4021%&	4020	10	S, W, N, Z	B, D, F	S	P, R	DAL, SHA, TEP
RWR78#4071%&	4070	10	S, W, N, Z	B, D	S	P, R	DAL, SHA, TEP
RWR78#4121%&	4120	10	S, W, N, Z	B, D, F	S	P, R	DAL, SHA, TEP
RWR78#4171%&	4170	10	S, W, N, Z	B, D	S	P, R	DAL, SHA, TEP
RWR78#4221%&	4220	10	S, W, N, Z	B, D, F	S	P, R	DAL, SHA, TEP
RWR78#4271%&	4270	10	S, W, N, Z	B, D	S	P, R	DAL, SHA, TEP
RWR78#4321%&	4320	10	S, W, N, Z	B, D, F	S	P, R	DAL, SHA, TEP
RWR78#4371%&	4370	10	S, W, N, Z	B, D	S	P, R	DAL, SHA, TEP
RWR78#4421%&	4420	10	S, W, N, Z	B, D, F	S	P, R	DAL, SHA, TEP
RWR78#4481%&	4480	10	S, W, N, Z	B, D	S	P, R	DAL, SHA, TEP
RWR78#4531%&	4530	10	S, W, N, Z	B, D, F	S	P, R	DAL, SHA, TEP
RWR78#4591%&	4590	10	S, W, N, Z	B, D	S	P, R	DAL, SHA, TEP
RWR78#4641%&	4640	10	S, W, N, Z	B, D, F	S	P, R	DAL, SHA, TEP
RWR78#4701%&	4700	10	S, W, N, Z	B, D	S	P, R	DAL, SHA, TEP
RWR78#4751%&	4750	10	S, W, N, Z	B, D, F	S	P, R	DAL, SHA, TEP
RWR78#4811%&	4810	10	S, W, N, Z	B, D	S	P, R	DAL, SHA, TEP
RWR78#4871%&	4870	10	S, W, N, Z	B, D, F	S	P, R	DAL, SHA, TEP
RWR78#4931%&	4930	10	S, W, N, Z	B, D	S	P, R	DAL, SHA, TEP
RWR78#4991%&	4990	10	S, W, N, Z	B, D, F	S	P, R	DAL, SHA, TEP
RWR78#5051%&	5050	10	S, W, N, Z	B, D	S	P, R	DAL, SHA, TEP
RWR78#5111%&	5110	10	S, W, N, Z	B, D, F	S	P, R	DAL, SHA, TEP
RWR78#5171%&	5170	10	S, W, N, Z	B, D	S	P, R	DAL, SHA, TEP
RWR78#5231%&	5230	10	S, W, N, Z	B, D, F	S	P, R	DAL, SHA, TEP
RWR78#5301%&	5300	10	S, W, N, Z	B, D	S	P, R	DAL, SHA, TEP
RWR78#5361%&	5360	10	S, W, N, Z	B, D, F	S	P, R	DAL, SHA, TEP
RWR78#5421%&	5420	10	S, W, N, Z	B, D	S	P, R	DAL, SHA, TEP

RWR78#5491%&	5490	10	S, W, N, Z	B, D, F	S	P, R	DAL, SHA, TEP
RWR78#5561%&	5560	10	S, W, N, Z	B, D	S	P, R	DAL, SHA, TEP
RWR78#5621%&	5620	10	S, W, N, Z	B, D, F	S	P, R	DAL, SHA, TEP
RWR78#5691%&	5690	10	S, W, N, Z	B, D	S	P, R	DAL, SHA, TEP
RWR78#5761%&	5760	10	S, W, N, Z	B, D, F	S	P, R	DAL, SHA, TEP
RWR78#5831%&	5830	10	S, W, N, Z	B, D	S	P, R	DAL, SHA, TEP
RWR78#5901%&	5900	10	S, W, N, Z	B, D, F	S	P, R	DAL, SHA, TEP
RWR78#5971%&	5970	10	S, W, N, Z	B, D	S	P, R	DAL, SHA, TEP
RWR78#6041%&	6040	10	S, W, N, Z	B, D, F	S	P, R	DAL, SHA, TEP
RWR78#6121%&	6120	10	S, W, N, Z	B, D	S	P, R	DAL, SHA, TEP
RWR78#6191%&	6190	10	S, W, N, Z	B, D, F	S	P, R	DAL, SHA, TEP
RWR78#6261%&	6260	10	S, W, N, Z	B, D	S	P, R	DAL, SHA, TEP
RWR78#6341%&	6340	10	S, W, N, Z	B, D, F	S	P, R	DAL, SHA, TEP
RWR78#6421%&	6420	10	S, W, N, Z	B, D	S	P, R	DAL, SHA, TEP
RWR78#6491%&	6490	10	S, W, N, Z	B, D, F	S	P, R	DAL, SHA, TEP
RWR78#6571%&	6570	10	S, W, N, Z	B, D	S	P, R	DAL, SHA, TEP
RWR78#6651%&	6650	10	S, W, N, Z	B, D, F	S	P, R	DAL, SHA, TEP
RWR78#6731%&	6730	10	S, W, N, Z	B, D	S	P, R	DAL, SHA, TEP
RWR78#6811%&	6810	10	S, W, N, Z	B, D, F	S	P, R	DAL, SHA, TEP
RWR78#6901%&	6900	10	S, W, N, Z	B, D	S	P, R	DAL, SHA, TEP
RWR78#6981%&	6980	10	S, W, N, Z	B, D, F	S	P, R	DAL, SHA, TEP
RWR78#7061%&	7060	10	S, W, N, Z	B, D	S	P, R	DAL, SHA, TEP
RWR78#7151%&	7150	10	S, W, N, Z	B, D, F	S	P, R	DAL, SHA, TEP
RWR78#7231%&	7230	10	S, W, N, Z	B, D	S	P, R	DAL, SHA, TEP
RWR78#7321%&	7320	10	S, W, N, Z	B, D, F	S	P, R	DAL, SHA, TEP
RWR78#7411%&	7410	10	S, W, N, Z	B, D	S	P, R	DAL, SHA, TEP
RWR78#7501%&	7500	10	S, W, N, Z	B, D, F	S	P, R	DAL, SHA, TEP
RWR78#7591%&	7590	10	S, W, N, Z	B, D	S	P, R	DAL, SHA, TEP
RWR78#7681%&0	7680	10	S, W, N, Z	B, D, F	S	P, R	DAL, SHA, TEP
RWR78#7771%&0	7770	10	S, W, N, Z	B, D	S	P, R	DAL, SHA, TEP
RWR78#7871%&	7870	10	S, W, N, Z	B, D, F	S	P, R	DAL, SHA, TEP
RWR78#7961%&	7960	10	S, W, N, Z	B, D	S	P, R	DAL, SHA, TEP
RWR78#8061%&	8060	10	S, W, N, Z	B, D, F	S	P, R	DAL, SHA, TEP
RWR78#8161%&	8160	10	S, W, N, Z	B, D	S	P, R	DAL, SHA, TEP
RWR78#8251%&	8250	10	S, W, N, Z	B, D, F	S	P, R	DAL, SHA, TEP
RWR78#8351%&	8350	10	S, W, N, Z	B, D	S	P, R	DAL, SHA, TEP
RWR78#8451%&	8450	10	S, W, N, Z	B, D, F	S	P, R	DAL, SHA, TEP
RWR78#8561%&	8560	10	S, W, N, Z	B, D	S	P, R	DAL, SHA, TEP
RWR78#8661%&	8660	10	S, W, N, Z	B, D, F	S	P, R	DAL, SHA, TEP
RWR78#8761%&	8760	10	S, W, N, Z	B, D	S	P, R	DAL, SHA, TEP
RWR78#8871%&	8870	10	S, W, N, Z	B, D, F	S	P, R	DAL, SHA, TEP
RWR78#8981%&	8980	10	S, W, N, Z	B, D	S	P, R	DAL, SHA, TEP
RWR78#9091%&	9090	10	S, W, N, Z	B, D, F	S	P, R	DAL, SHA, TEP
RWR78#9201%&	9200	10	S, W, N, Z	B, D	S	P, R	DAL, SHA, TEP
RWR78#9311%&	9310	10	S, W, N, Z	B, D, F	S	P, R	DAL, SHA, TEP
RWR78#9421%&	9420	10	S, W, N, Z	B, D	S	P, R	DAL, SHA, TEP
RWR78#9531%&	9530	10	S, W, N, Z	B, D, F	S	P, R	DAL, SHA, TEP

RWR78#9651%&	9650	10	S, W, N, Z	B, D	S	P, R	DAL, SHA, TEP
RWR78#9761%&	9760	10	S, W, N, Z	B, D, F	S	P, R	DAL, SHA, TEP
RWR78#9881%&	9880	10	S, W, N, Z	B, D	S	P, R	DAL, SHA, TEP
RWR78#1002%&	10000	10	S, W, N, Z	B, D, F	S	P, R	DAL, SHA, TEP
RWR78#1012%&	10100	10	S, W, N, Z	B, D	S	P, R	DAL, SHA, TEP
RWR78#1022%&	10200	10	S, W, N, Z	B, D, F	S	P, R	DAL, SHA, TEP
RWR78#1042%&	10400	10	S, W, N, Z	B, D	S	P, R	DAL, SHA, TEP
RWR78#1052%&	10500	10	S, W, N, Z	B, D, F	S	P, R	DAL, SHA, TEP
RWR78#1062%&	10600	10	S, W, N, Z	B, D	S	P, R	DAL, SHA, TEP
RWR78#1072%&	10700	10	S, W, N, Z	B, D, F	S	P, R	DAL, SHA, TEP
RWR78#1092%&	10900	10	S, W, N, Z	B, D	S	P, R	DAL, SHA, TEP
RWR78#1102%&	11000	10	S, W, N, Z	B, D, F	S	P, R	DAL, SHA, TEP
RWR78#1112%&	11100	10	S, W, N, Z	B, D	S	P, R	DAL, SHA, TEP
RWR78#1132%&	11300	10	S, W, N, Z	B, D, F	S	P, R	DAL, SHA, TEP
RWR78#1142%&	11400	10	S, W, N, Z	B, D	S	P, R	DAL, SHA, TEP
RWR78#1152%&	11500	10	S, W, N, Z	B, D, F	S	P, R	DAL, SHA, TEP
RWR78#1172%&	11700	10	S, W, N, Z	B, D	S	P, R	DAL, SHA, TEP
RWR78#1182%&	11800	10	S, W, N, Z	B, D, F	S	P, R	DAL, SHA, TEP
RWR78#1202%&	12000	10	S, W, N, Z	B, D	S	P, R	DAL, SHA, TEP
RWR78#1212%&	12100	10	S, W, N, Z	B, D, F	S	P, R	DAL, SHA, TEP
RWR78#1232%&	12300	10	S, W, N, Z	B, D	S	P, R	DAL, SHA, TEP
RWR78#1242%&	12400	10	S, W, N, Z	B, D, F	S	P, R	DAL, SHA, TEP
RWR78#1262%&	12600	10	S, W, N, Z	B, D	S	P, R	DAL, SHA, TEP
RWR78#1272%&	12700	10	S, W, N, Z	B, D, F	S	P, R	DAL, SHA, TEP
RWR78#1292%&	12900	10	S, W, N, Z	B, D	S	P, R	DAL, SHA, TEP
RWR78#1302%&	13000	10	S, W, N, Z	B, D, F	S	P, R	DAL, SHA, TEP
RWR78#1322%&	13200	10	S, W, N, Z	B, D	S	P, R	DAL, SHA, TEP
RWR78#1332%&	13300	10	S, W, N, Z	B, D, F	S	P, R	DAL, SHA, TEP
RWR78#1352%&	13500	10	S, W, N, Z	B, D	S	P, R	DAL, SHA, TEP
RWR78#1372%&	13700	10	S, W, N, Z	B, D, F	S	P, R	DAL, SHA, TEP
RWR78#1382%&	13800	10	S, W, N, Z	B, D	S	P, R	DAL, SHA, TEP
RWR78#1402%&	14000	10	S, W, N, Z	B, D, F	S	P, R	DAL, SHA, TEP
RWR78#1422%&	14200	10	S, W, N, Z	B, D	S	P, R	DAL, SHA, TEP
RWR78#1432%&	14300	10	S, W, N, Z	B, D, F	S	P, R	DAL, SHA, TEP
RWR78#1452%&	14500	10	S, W, N, Z	B, D	S	P, R	DAL, SHA, TEP
RWR78#1472%&	14700	10	S, W, N, Z	B, D, F	S	P, R	DAL, SHA, TEP
RWR78#1492%&	14900	10	S, W, N, Z	B, D	S	P, R	DAL, SHA, TEP
RWR78#1502%&	15000	10	S, W, N, Z	B, D, F	S	P, R	DAL, SHA, TEP
RWR78#1522%&	15200	10	S, W, N, Z	B, D	S	P, R	DAL, SHA, TEP
RWR78#1542%&	15400	10	S, W, N, Z	B, D, F	S	P, R	DAL, SHA, TEP
RWR78#1562%&	15600	10	S, W, N, Z	B, D	S	P, R	DAL, SHA, TEP
RWR78#1582%&	15800	10	S, W, N, Z	B, D, F	S	P, R	DAL, SHA, TEP
RWR78#1602%&	16000	10	S, W, N, Z	B, D	S	P, R	DAL, SHA, TEP
RWR78#1622%&	16200	10	S, W, N, Z	B, D, F	S	P, R	DAL, SHA, TEP
RWR78#1642%&	16400	10	S, W, N, Z	B, D	S	P, R	DAL, SHA, TEP
RWR78#1652%&	16500	10	S, W, N, Z	B, D, F	S	P, R	DAL, SHA, TEP
RWR78#1672%&	16700	10	S, W, N, Z	B, D	S	P, R	DAL, SHA, TEP

RWR78#1692%&	16900	10	S, W, N, Z	B, D, F	S	P, R	DAL, SHA, TEP
RWR78#1722%&	17200	10	S, W, N, Z	B, D	S	P, R	DAL, SHA, TEP
RWR78#1742%&	17400	10	S, W, N, Z	B, D, F	S	P, R	DAL, SHA, TEP
RWR78#1762%&	17600	10	S, W, N, Z	B, D	S	P, R	DAL, SHA, TEP
RWR78#1782%&	17800	10	S, W, N, Z	B, D, F	S	P, R	DAL, SHA, TEP
RWR78#1802%&	18000	10	S, W, N, Z	B, D, F	S	P, R	DAL, SHA, TEP
RWR78#1822%&	18200	10	S, W, N, Z	B, D, F	S	P, R	DAL, SHA, TEP
RWR78#1842%&	18400	10	S, W, N, Z	B, D	S	P, R	DAL, SHA, TEP
RWR78#1872%&	18700	10	S, W, N, Z	B, D, F	S	P, R	DAL, SHA, TEP
RWR78#1892%&	18900	10	S, W, N, Z	B, D	S	P, R	DAL, SHA, TEP
RWR78#1912%&	19100	10	S, W, N, Z	B, D, F	S	P, R	DAL, SHA, TEP
RWR78#1932%&	19300	10	S, W, N, Z	B, D	S	P, R	DAL, SHA, TEP
RWR78#1962%&	19600	10	S, W, N, Z	B, D, F	S	P, R	DAL, SHA, TEP
RWR78#1982%&	19800	10	S, W	B, D	S	P, R	DAL, SHA, TEP
RWR78#2002%&	20000	10	S, W	B, D, F	S	P, R	DAL, SHA, TEP
RWR78#2032%&	20300	10	S, W	B, D	S	P, R	DAL, SHA, TEP
RWR78#2052%&	20500	10	S, W	B, D, F	S	P, R	DAL, SHA, TEP
RWR78#2082%&	20800	10	S, W	B, D	S	P, R	DAL, SHA, TEP
RWR78#2102%&	21000	10	S, W	B, D, F	S	P, R	DAL, SHA, TEP
RWR78#2132%&	21300	10	S, W	B, D	S	P, R	DAL, SHA, TEP
RWR78#2152%&	21500	10	S, W	B, D, F	S	P, R	DAL, SHA, TEP
RWR78#2182%&	21800	10	S, W	B, D	S	P, R	DAL, SHA, TEP
RWR78#2212%&	22100	10	S, W	B, D, F	S	P, R	DAL, SHA, TEP
RWR78#2232%&	22300	10	S, W	B, D	S	P, R	DAL, SHA, TEP
RWR78#2262%&	22600	10	S, W	B, D, F	S	P, R	DAL, SHA, TEP
RWR78#2292%&	22900	10	S, W	B, D	S	P, R	DAL, SHA, TEP
RWR78#2322%&	23200	10	S, W	B, D, F	S	P, R	DAL, SHA, TEP
RWR78#2342%&	23400	10	S, W	B, D	S	P, R	DAL, SHA, TEP
RWR78#2372%&	23700	10	S, W	B, D, F	S	P, R	DAL, SHA, TEP
RWR78#2402%&	24000	10	S, W	B, D	S	P, R	DAL, SHA, TEP
RWR78#2432%&	24300	10	S, W	B, D, F	S	P, R	DAL, SHA, TEP
RWR78#2462%&	24600	10	S, W	B, D	S	P, R	DAL, SHA, TEP
RWR78#2492%&	24900	10	S, W	B, D, F	S	P, R	DAL, SHA, TEP
RWR78#2522%&	25200	10	S, W	B, D	S	P, R	DAL, SHA, TEP
RWR78#2552%&	25500	10	S, W	B, D, F	S	P, R	DAL, SHA, TEP
RWR78#2582%&	25800	10	S, W	B, D	S	P, R	DAL, SHA, TEP
RWR78#2612%&	26100	10	S, W	B, D, F	S	P, R	DAL, SHA, TEP
RWR78#2642%&	26400	10	S, W	B, D	S	P, R	DAL, SHA, TEP
RWR78#2672%&	26700	10	S, W	B, D, F	S	P, R	DAL, SHA, TEP
RWR78#2712%&	27100	10	S, W	B, D	S	P, R	DAL, SHA, TEP
RWR78#2742%&	27400	10	S, W	B, D, F	S	P, R	DAL, SHA, TEP
RWR78#2772%&	27700	10	S, W	B, D	S	P, R	DAL, SHA, TEP
RWR78#2802%&	28000	10	S, W	B, D, F	S	P, R	DAL, SHA, TEP
RWR78#2842%&	28400	10	S, W	B, D	S	P, R	DAL, SHA, TEP
RWR78#2872%&	28700	10	S, W	B, D, F	S	P, R	DAL, SHA, TEP
RWR78#2912%&	29100	10	S, W	B, D	S	P, R	DAL, SHA, TEP
RWR78#2942%&	29400	10	S, W	B, D, F	S	P, R	DAL, SHA, TEP

RWR78#2982%&	29800	10	S, W	B, D	S	P, R	DAL, SHA, TEP
RWR78#3012%&	30100	10	S, W	B, D, F	S	P, R	DAL, SHA, TEP
RWR78#3052%&	30500	10	S, W	B, D	S	P, R	DAL, SHA, TEP
RWR78#3092%&	30900	10	S, W	B, D, F	S	P, R	DAL, SHA, TEP
RWR78#3122%&	31200	10	S, W	B, D	S	P, R	DAL, SHA, TEP
RWR78#3162%&	31600	10	S, W	B, D, F	S	P, R	DAL, SHA, TEP
RWR78#3202%&	32000	10	S, W	B, D	S	P, R	DAL, SHA, TEP
RWR78#3242%&	32400	10	S, W	B, D, F	S	P, R	DAL, SHA, TEP
RWR78#3282%&	32800	10	S, W	B, D	S	P, R	DAL, SHA, TEP
RWR78#3322%&	33200	10	S, W	B, D, F	S	P, R	DAL, SHA, TEP
RWR78#3362%&	33600	10	S, W	B, D	S	P, R	DAL, SHA, TEP
RWR78#3402%&	34000	10	S, W	B, D, F	S	P, R	DAL, SHA, TEP
RWR78#3442%&	34400	10	S, W	B, D	S	P, R	DAL, SHA, TEP
RWR78#3482%&	34800	10	S, W	B, D, F	S	P, R	DAL, SHA, TEP
RWR78#3522%&	35200	10	S, W	B, D	S	P, R	DAL, SHA, TEP
RWR78#3572%&	35700	10	S, W	B, D, F	S	P, R	DAL, SHA, TEP
RWR78#3612%&	36100	10	S, W	B, D	S	P, R	DAL, SHA, TEP
RWR78#3652%&	36500	10	S, W	B, D, F	S	P, R	DAL, SHA, TEP
RWR78#3702%&	37000	10	S, W	B, D	S	P, R	DAL, SHA, TEP
RWR78#3742%&	37400	10	S, W	B, D, F	S	P, R	DAL, SHA, TEP
RWR78#3792%&	37900	10	S, W	B, D	S	P, R	DAL, SHA, TEP
RWR78#3832%&	38300	10	S, W	B, D, F	S	P, R	DAL, SHA, TEP
RWR78#3882%&	38800	10	S, W	B, D	S	P, R	DAL, SHA, TEP
RWR78#3922%&	39200	10	S, W	B, D, F	S	P, R	DAL, SHA, TEP

RWR78 RESISTORS DECADE BREAKDOWN

Click on the link below to see the associated parts selection listing:

Resistance Range
0.1 Ohms through 0.988 Ohms
1.00 Ohms through 9.88 Ohms
10.0 Ohms through 98.8 Ohms
100 Ohms through 988 Ohms
1000 Ohms through 9880 Ohms
10000 Ohms through 39200 Ohms

RWR78 Wirewound Resistors: 0.100 Ohms through 0.988 Ohms

	Resistance	Power	Terminal	Resistance	Level 1	Level 2	
Part Number	Value (Ohms)	Rating (W)	Characteristic (#)	Tolerance (%)	(FRL)(&)	(FRL)(&)	Manufacturer
RWR78#R100%&	0.100	10	S, W, N, Z	B, D, F	S	P, R	DAL, SHA, TEP
RWR78#R101%&	0.101	10	S, W, N, Z	B, D	S	P, R	DAL, SHA, TEP
RWR78#R102%&	0.102	10	S, W, N, Z	B, D, F	S	P, R	DAL, SHA, TEP
RWR78#R104%&	0.104	10	S, W, N, Z	B, D	S	P, R	DAL, SHA, TEP

RWR78#R105%&	0.105	10	S, W, N, Z	B, D, F	S	P, R	DAL, SHA, TEP
RWR78#R106%&	0.106	10	S, W, N, Z	B, D	S	P, R	DAL, SHA, TEP
RWR78#R107%&	0.107	10	S, W, N, Z	B, D, F	S	P, R	DAL, SHA, TEP
	Resistance	Power	Terminal	Resistance	Level 1	Level 2	
Part Number	Value (Ohms)	Rating (W)	Characteristic (#)	Tolerance (%)	(FRL)(&)	(FRL)(&)	Manufacturer
RWR78#R109%&	0.109	10	S, W, N, Z	B, D	S	P, R	DAL, SHA, TEP
RWR78#R110%&	0.110	10	S, W, N, Z	B, D, F	S	P, R	DAL, SHA, TEP
RWR78#R111%&	0.111	10	S, W, N, Z	B, D	S	P, R	DAL, SHA, TEP
RWR78#R113%&	0.113	10	S, W, N, Z	B, D, F	S	P, R	DAL, SHA, TEP
RWR78#R114%&	0.114	10	S, W, N, Z	B, D	S	P, R	DAL, SHA, TEP
RWR78#R115%&	0.115	10	S, W, N, Z	B, D, F	S	P, R	DAL, SHA, TEP
RWR78#R117%&	0.117	10	S, W, N, Z	B, D	S	P, R	DAL, SHA, TEP
	Resistance	Power	Terminal	Resistance	Level 1	Level 2	
Part Number	Value (Ohms)	Rating (W)	Characteristic (#)	Tolerance (%)	(FRL)(&)	(FRL)(&)	Manufacturer
RWR78#R118%&	0.118	10	S, W, N, Z	B, D, F	S	P, R	DAL, SHA, TEP
RWR78#R120%&	0.120	10	S, W, N, Z	B, D	S	P, R	DAL, SHA, TEP
RWR78#R121%&	0.121	10	S, W, N, Z	B, D, F	S	P, R	DAL, SHA, TEP
RWR78#R123%&	0.123	10	S, W, N, Z	B, D	S	P, R	DAL, SHA, TEP
RWR78#R124%&	0.124	10	S, W, N, Z	B, D, F	S	P, R	DAL, SHA, TEP
RWR78#R126%&	0.126	10	S, W, N, Z	B, D	S	P, R	DAL, SHA, TEP
RWR78#R127%&	0.127	10	S, W, N, Z	B, D, F	S	P, R	DAL, SHA, TEP
	Resistance	Power	Terminal	Resistance	Level 1	Level 2	
Part Number	Value (Ohms)	Rating (W)	Characteristic (#)	Tolerance (%)	(FRL)(&)	(FRL)(&)	Manufacturer
RWR78#R129%&	0.129	10	S, W, N, Z	B, D	S	P, R	DAL, SHA, TEP
RWR78#R130%&	0.130	10	S, W, N, Z	B, D, F	S	P, R	DAL, SHA, TEP
RWR78#R132%&	0.132	10	S, W, N, Z	B, D	S	P, R	DAL, SHA, TEP
RWR78#R133%&	0.133	10	S, W, N, Z	B, D, F	S	P, R	DAL, SHA, TEP
RWR78#R135%&	0.135	10	S, W, N, Z	B, D	S	P, R	DAL, SHA, TEP
RWR78#R137%&	0.137	10	S, W, N, Z	B, D, F	S	P, R	DAL, SHA, TEP
RWR78#R138%&	0.138	10	S, W, N, Z	B, D	S	P, R	DAL, SHA, TEP
	Resistance	Power	Terminal	Resistance	Level 1	Level 2	
Part Number	Value (Ohms)	Rating (W)	Characteristic (#)	Tolerance (%)	(FRL)(&)	(FRL)(&)	Manufacturer
RWR78#R140%&	0.140	10	S, W, N, Z	B, D, F	S	P, R	DAL, SHA, TEP
RWR78#R142%&	0.142	10	S, W, N, Z	B, D	S	P, R	DAL, SHA, TEP
RWR78#R143%&	0.143	10	S, W, N, Z	B, D, F	S	P, R	DAL, SHA, TEP
RWR78#R145%&	0.145	10	S, W, N, Z	B, D	S	P, R	DAL, SHA, TEP
RWR78#R147%&	0.147	10	S, W, N, Z	B, D, F	S	P, R	DAL, SHA, TEP
RWR78#R149%&	0.149	10	S, W, N, Z	B, D	S	P, R	DAL, SHA, TEP
RWR78#R150%&	0.150	10	S, W, N, Z	B, D, F	S	P, R	DAL, SHA, TEP
	Resistance	Power	Terminal	Resistance	Level 1	Level 2	
Part Number	Value (Ohms)	Rating (W)	Characteristic (#)	Tolerance (%)	(FRL)(&)	(FRL)(&)	Manufacturer
RWR78#R152%&	0.152	10	S, W, N, Z	B, D	S	P, R	DAL, SHA, TEP
RWR78#R154%&	0.154	10	S, W, N, Z	B, D, F	S	P, R	DAL, SHA, TEP
RWR78#R156%&	0.156	10	S, W, N, Z	B, D	S	P, R	DAL, SHA, TEP
RWR78#R158%&	0.158	10	S, W, N, Z	B, D, F	S	P, R	DAL, SHA, TEP
RWR78#R160%&	0.160	10	S, W, N, Z	B, D	S	P, R	DAL, SHA, TEP
RWR78#R162%&	0.162	10	S, W, N, Z	B, D, F	S	P, R	DAL, SHA, TEP

RWR78#R164%&	0.164	10	S, W, N, Z	B, D	S	P, R	DAL, SHA, TEP
	Resistance	Power	Terminal	Resistance	Level 1	Level 2	
Part Number	Value (Ohms)	Rating (W)	Characteristic (#)	Tolerance (%)	(FRL)(&)	(FRL)(&)	Manufacturer
RWR78#R165%&	0.165	10	S, W, N, Z	B, D, F	S	P, R	DAL, SHA, TEP
RWR78#R167%&	0.167	10	S, W, N, Z	B, D	S	P, R	DAL, SHA, TEP
RWR78#R169%&	0.169	10	S, W, N, Z	B, D, F	S	P, R	DAL, SHA, TEP
RWR78#R172%&	0.172	10	S, W, N, Z	B, D	S	P, R	DAL, SHA, TEP
RWR78#R174%&	0.174	10	S, W, N, Z	B, D, F	S	P, R	DAL, SHA, TEP
RWR78#R176%&	0.176	10	S, W, N, Z	B, D	S	P, R	DAL, SHA, TEP
	Resistance	Power	Terminal	Resistance	Level 1	Level 2	
Part Number	Value (Ohms)	Rating (W)	Characteristic (#)	Tolerance (%)	(FRL)(&)	(FRL)(&)	Manufacturer
RWR78#R178#&	0.178	10	S, W, N, Z	B, D, F	S	P, R	DAL, SHA, TEP
RWR78#R180%&	0.180	10	S, W, N, Z	B, D, F	S	P, R	DAL, SHA, TEP
RWR78#R182%&	0.182	10	S, W, N, Z	B, D, F	S	P, R	DAL, SHA, TEP
RWR78#R184%&	0.184	10	S, W, N, Z	B, D	S	P, R	DAL, SHA, TEP
RWR78#R187%&	0.187	10	S, W, N, Z	B, D, F	S	P, R	DAL, SHA, TEP
RWR78#R189%&	0.189	10	S, W, N, Z	B, D	S	P, R	DAL, SHA, TEP
RWR78#R191%&	0.191	10	S, W, N, Z	B, D, F	S	P, R	DAL, SHA, TEP
	Resistance	Power	Terminal	Resistance	Level 1	Level 2	
Part Number	Value (Ohms)	Rating (W)	Characteristic (#)	Tolerance (%)	(FRL)(&)	(FRL)(&)	Manufacturer
RWR78#R193%&	0.193	10	S, W, N, Z	B, D	S	P, R	DAL, SHA, TEP
RWR78#R196%&	0.196	10	S, W, N, Z	B, D, F	S	P, R	DAL, SHA, TEP
RWR78#R198%&	0.198	10	S, W, N, Z	B, D	S	P, R	DAL, SHA, TEP
RWR78#R200%&	0.200	10	S, W, N, Z	B, D, F	S	P, R	DAL, SHA, TEP
RWR78#R203%&	0.203	10	S, W, N, Z	B, D	S	P, R	DAL, SHA, TEP
RWR78#R205%&	0.205	10	S, W, N, Z	B, D, F	S	P, R	DAL, SHA, TEP
RWR78#R208%&	0.208	10	S, W, N, Z	B, D	S	P, R	DAL, SHA, TEP
	Resistance	Power	Terminal	Resistance	Level 1	Level 2	
Part Number	Value (Ohms)	Rating (W)	Characteristic (#)	Tolerance (%)	(FRL)(&)	(FRL)(&)	Manufacturer
RWR78#R210%&	0.210	10	S, W, N, Z	B, D, F	S	P, R	DAL, SHA, TEP
RWR78#R213%&	0.213	10	S, W, N, Z	B, D	S	P, R	DAL, SHA, TEP
RWR78#R215%&	0.215	10	S, W, N, Z	B, D, F	S	P, R	DAL, SHA, TEP
RWR78#R218%&	0.218	10	S, W, N, Z	B, D	S	P, R	DAL, SHA, TEP
RWR78#R221%&	0.221	10	S, W, N, Z	B, D, F	S	P, R	DAL, SHA, TEP
RWR78#R223%&	0.223	10	S, W, N, Z	B, D	S	P, R	DAL, SHA, TEP
RWR78#R226%&	0.226	10	S, W, N, Z	B, D, F	S	P, R	DAL, SHA, TEP
	Resistance	Power	Terminal	Resistance	Level 1	Level 2	
Part Number	Value (Ohms)	Rating (W)	Characteristic (#)	Tolerance (%)	(FRL)(&)	(FRL)(&)	Manufacturer
RWR78#R229%&	0.229	10	S, W, N, Z	B, D	S	P, R	DAL, SHA, TEP
RWR78#R232%&	0.232	10	S, W, N, Z	B, D, F	S	P, R	DAL, SHA, TEP
RWR78#R234%&	0.234	10	S, W, N, Z	B, D	S	P, R	DAL, SHA, TEP
RWR78#R237%&	0.237	10	S, W, N, Z	B, D, F	S	P, R	DAL, SHA, TEP
RWR78#R240%&	0.240	10	S, W, N, Z	B, D	S	P, R	DAL, SHA, TEP
RWR78#R243%&	0.243	10	S, W, N, Z	B, D, F	S	P, R	DAL, SHA, TEP
RWR78#R246%&	0.246	10	S, W, N, Z	B, D	S	P, R	DAL, SHA, TEP
	Resistance	Power	Terminal	Resistance	Level 1	Level 2	
Part Number	Value (Ohms)	Rating (W)	Characteristic (#)	Tolerance (%)	(FRL)(&)	(FRL)(&)	Manufacturer

RWR78#R249%&	0.249	10	S, W, N, Z	B, D, F	S	P, R	DAL, SHA, TEP
RWR78#R252%&	0.252	10	S, W, N, Z	B, D	S	P, R	DAL, SHA, TEP
RWR78#R255%&	0.255	10	S, W, N, Z	B, D, F	S	P, R	DAL, SHA, TEP
RWR78#R258%&	0.258	10	S, W, N, Z	B, D	S	P, R	DAL, SHA, TEP
RWR78#R261%&	0.261	10	S, W, N, Z	B, D, F	S	P, R	DAL, SHA, TEP
RWR78#R264%&	0.264	10	S, W, N, Z	B, D	S	P, R	DAL, SHA, TEP
RWR78#R267%&	0.267	10	S, W, N, Z	B, D, F	S	P, R	DAL, SHA, TEP
	Resistance	Power	Terminal	Resistance	Level 1	Level 2	
Part Number	Value (Ohms)	Rating (W)	Characteristic (#)	Tolerance (%)	(FRL)(&)	(FRL)(&)	Manufacturer
RWR78#R271%&	0.271	10	S, W, N, Z	B, D	S	P, R	DAL, SHA, TEP
RWR78#R274%&	0.274	10	S, W, N, Z	B, D, F	S	P, R	DAL, SHA, TEP
RWR78#R277%&	0.277	10	S, W, N, Z	B, D	S	P, R	DAL, SHA, TEP
RWR78#R280%&	0.280	10	S, W, N, Z	B, D, F	S	P, R	DAL, SHA, TEP
RWR78#R284%&	0.284	10	S, W, N, Z	B, D	S	P, R	DAL, SHA, TEP
RWR78#R287%&	0.287	10	S, W, N, Z	B, D, F	S	P, R	DAL, SHA, TEP
RWR78#R291%&	0.291	10	S, W, N, Z	B, D	S	P, R	DAL, SHA, TEP
	Resistance	Power	Terminal	Resistance	Level 1	Level 2	
Part Number	Value (Ohms)	Rating (W)	Characteristic (#)	Tolerance (%)	(FRL)(&)	(FRL)(&)	Manufacturer
RWR78#R294%&	0.294	10	S, W, N, Z	B, D, F	S	P, R	DAL, SHA, TEP
RWR78#R298%&	0.298	10	S, W, N, Z	B, D	S	P, R	DAL, SHA, TEP
RWR78#R301%&	0.301	10	S, W, N, Z	B, D, F	S	P, R	DAL, SHA, TEP
RWR78#R305%&	0.305	10	S, W, N, Z	B, D	S	P, R	DAL, SHA, TEP
RWR78#R309%&	0.309	10	S, W, N, Z	B, D, F	S	P, R	DAL, SHA, TEP
RWR78#R312%&	0.312	10	S, W, N, Z	B, D	S	P, R	DAL, SHA, TEP
RWR78#R316%&	0.316	10	S, W, N, Z	B, D, F	S	P, R	DAL, SHA, TEP
	Resistance	Power	Terminal	Resistance	Level 1	Level 2	
Part Number	Value (Ohms)	Rating (W)	Characteristic (#)	Tolerance (%)	(FRL)(&)	(FRL)(&)	Manufacturer
RWR78#R320%&	0.320	10	S, W, N, Z	B, D	S	P, R	DAL, SHA, TEP
RWR78#R324%&	0.324	10	S, W, N, Z	B, D, F	S	P, R	DAL, SHA, TEP
RWR78#R328%&	0.328	10	S, W, N, Z	B, D	S	P, R	DAL, SHA, TEP
RWR78#R332%&	0.332	10	S, W, N, Z	B, D, F	S	P, R	DAL, SHA, TEP
RWR78#R336%&	0.336	10	S, W, N, Z	B, D	S	P, R	DAL, SHA, TEP
RWR78#R340%&	0.340	10	S, W, N, Z	B, D, F	S	P, R	DAL, SHA, TEP
RWR78#R344%&	0.344	10	S, W, N, Z	B, D	S	P, R	DAL, SHA, TEP
	Resistance	Power	Terminal	Resistance	Level 1	Level 2	
Part Number	Value (Ohms)	Rating (W)	Characteristic (#)	Tolerance (%)	(FRL)(&)	(FRL)(&)	Manufacturer
RWR78#R348%&	0.348	10	S, W, N, Z	B, D, F	S	P, R	DAL, SHA, TEP
RWR78#R352%&	0.352	10	S, W, N, Z	B, D	S	P, R	DAL, SHA, TEP
RWR78#R357%&	0.357	10	S, W, N, Z	B, D, F	S	P, R	DAL, SHA, TEP
RWR78#R361%&	0.361	10	S, W, N, Z	B, D	S	P, R	DAL, SHA, TEP
RWR78#R365%&	0.365	10	S, W, N, Z	B, D, F	S	P, R	DAL, SHA, TEP
RWR78#R370%&	0.370	10	S, W, N, Z	B, D	S	P, R	DAL, SHA, TEP
RWR78#R374%&	0.374	10	S, W, N, Z	B, D, F	S	P, R	DAL, SHA, TEP
	Resistance	Power	Terminal	Resistance	Level 1	Level 2	
Part Number	Value (Ohms)	Rating (W)	Characteristic (#)	Tolerance (%)	(FRL)(&)	(FRL)(&)	Manufacturer
RWR78#R379%&	0.379	10	S, W, N, Z	B, D	S	P, R	DAL, SHA, TEP
RWR78#R383%&	0.383	10	S, W, N, Z	B, D, F	S	P, R	DAL, SHA, TEP

RWR78#R388%&	0.388	10	S, W, N, Z	B, D	S	P, R	DAL, SHA, TEP
RWR78#R392%&	0.392	10	S, W, N, Z	B, D, F	S	P, R	DAL, SHA, TEP
RWR78#R397%&	0.397	10	S, W, N, Z	B, D	S	P, R	DAL, SHA, TEP
RWR78#R402%&	0.402	10	S, W, N, Z	B, D, F	S	P, R	DAL, SHA, TEP
RWR78#R407%&	0.407	10	S, W, N, Z	B, D	S	P, R	DAL, SHA, TEP
	Resistance	Power	Terminal	Resistance	Level 1	Level 2	
Part Number	Value (Ohms)	Rating (W)	Characteristic (#)	Tolerance (%)	(FRL)(&)	(FRL)(&)	Manufacturer
RWR78#R412%&	0.412	10	S, W, N, Z	B, D, F	S	P, R	DAL, SHA, TEP
RWR78#R417%&	0.417	10	S, W, N, Z	B, D	S	P, R	DAL, SHA, TEP
RWR78#R422%&	0.422	10	S, W, N, Z	B, D, F	S	P, R	DAL, SHA, TEP
RWR78#R427%&	0.427	10	S, W, N, Z	B, D	S	P, R	DAL, SHA, TEP
RWR78#R432%&	0.432	10	S, W, N, Z	B, D, F	S	P, R	DAL, SHA, TEP
RWR78#R437%&	0.437	10	S, W, N, Z	B, D	S	P, R	DAL, SHA, TEP
RWR78#R442%&	0.442	10	S, W, N, Z	B, D, F	S	P, R	DAL, SHA, TEP
	Resistance	Power	Terminal	Resistance	Level 1	Level 2	
Part Number	Value (Ohms)	Rating (W)	Characteristic (#)	Tolerance (%)	(FRL)(&)	(FRL)(&)	Manufacturer
RWR78#R448%&	0.448	10	S, W, N, Z	B, D	S	P, R	DAL, SHA, TEP
RWR78#R453%&	0.453	10	S, W, N, Z	B, D, F	S	P, R	DAL, SHA, TEP
RWR78#R459%&	0.459	10	S, W, N, Z	B, D	S	P, R	DAL, SHA, TEP
RWR78#R464%&	0.464	10	S, W, N, Z	B, D, F	S	P, R	DAL, SHA, TEP
RWR78#R470%&	0.470	10	S, W, N, Z	B, D	S	P, R	DAL, SHA, TEP
RWR78#R475%&	0.475	10	S, W, N, Z	B, D, F	S	P, R	DAL, SHA, TEP
RWR78#R481%&	0.481	10	S, W, N, Z	B, D	S	P, R	DAL, SHA, TEP
	Resistance	Power	Terminal	Resistance	Level 1	Level 2	
Part Number	Value (Ohms)	Rating (W)	Characteristic (#)	Tolerance (%)	(FRL)(&)	(FRL)(&)	Manufacturer
RWR78#R487%&	0.487	10	S, W, N, Z	B, D, F	S	P, R	DAL, SHA, TEP
RWR78#R493%&	0.493	10	S, W, N, Z	B, D	S	P, R	DAL, SHA, TEP
RWR78#R499%&	0.499	10	S, W, N, Z	B, D, F	S	P, R	DAL, SHA, TEP
RWR78#R505%&	0.505	10	S, W, N, Z	B, D	S	P, R	DAL, SHA, TEP
RWR78#R511%&	0.511	10	S, W, N, Z	B, D, F	S	P, R	DAL, SHA, TEP
RWR78#R517%&	0.517	10	S, W, N, Z	B, D	S	P, R	DAL, SHA, TEP
RWR78#R523%&	0.523	10	S, W, N, Z	B, D, F	S	P, R	DAL, SHA, TEP
	Resistance	Power	Terminal	Resistance	Level 1	Level 2	
Part Number	Value (Ohms)	Rating (W)	Characteristic (#)	Tolerance (%)	(FRL)(&)	(FRL)(&)	Manufacturer
RWR78#R530%&	0.530	10	S, W, N, Z	B, D	S	P, R	DAL, SHA, TEP
RWR78#R536%&	0.536	10	S, W, N, Z	B, D, F	S	P, R	DAL, SHA, TEP
RWR78#R542%&	0.542	10	S, W, N, Z	B, D	S	P, R	DAL, SHA, TEP
RWR78#R549%&	0.549	10	S, W, N, Z	B, D, F	S	P, R	DAL, SHA, TEP
RWR78#R556%&	0.556	10	S, W, N, Z	B, D	S	P, R	DAL, SHA, TEP
RWR78#R562%&	0.562	10	S, W, N, Z	B, D, F	S	P, R	DAL, SHA, TEP
RWR78#R569%&	0.569	10	S, W, N, Z	B, D	S	P, R	DAL, SHA, TEP
	Resistance	Power	Terminal	Resistance	Level 1	Level 2	
Part Number	Value (Ohms)	Rating (W)	Characteristic (#)	Tolerance (%)	(FRL)(&)	(FRL)(&)	Manufacturer
RWR78#R576%&	0.576	10	S, W, N, Z	B, D, F	S	P, R	DAL, SHA, TEP
RWR78#R583%&	0.583	10	S, W, N, Z	B, D	S	P, R	DAL, SHA, TEP
RWR78#R590%&	0.590	10	S, W, N, Z	B, D, F	S	P, R	DAL, SHA, TEP
RWR78#R597%&	0.597	10	S, W, N, Z	B, D	S	P, R	DAL, SHA, TEP

RWR78#R604%&	0.604	10	S, W, N, Z	B, D, F	S	P, R	DAL, SHA, TEP
RWR78#R612%&	0.612	10	S, W, N, Z	B, D	S	P, R	DAL, SHA, TEP
	Resistance	Power	Terminal	Resistance	Level 1	Level 2	
Part Number	Value (Ohms)	Rating (W)	Characteristic (#)	Tolerance (%)	(FRL)(&)	(FRL)(&)	Manufacturer
RWR78#R619%&	0.619	10	S, W, N, Z	B, D, F	S	P, R	DAL, SHA, TEP
RWR78#R626%&	0.626	10	S, W, N, Z	B, D	S	P, R	DAL, SHA, TEP
RWR78#R634%&	0.634	10	S, W, N, Z	B, D, F	S	P, R	DAL, SHA, TEP
RWR78#R642%&	0.642	10	S, W, N, Z	B, D	S	P, R	DAL, SHA, TEP
RWR78#R649%&	0.649	10	S, W, N, Z	B, D, F	S	P, R	DAL, SHA, TEP
RWR78#R657%&	0.657	10	S, W, N, Z	B, D	S	P, R	DAL, SHA, TEP
RWR78#R665%&	0.665	10	S, W, N, Z	B, D, F	S	P, R	DAL, SHA, TEP
	Resistance	Power	Terminal	Resistance	Level 1	Level 2	
Part Number	Value (Ohms)	Rating (W)	Characteristic (#)	Tolerance (%)	(FRL)(&)	(FRL)(&)	Manufacturer
RWR78#R673%&	0.673	10	S, W, N, Z	B, D	S	P, R	DAL, SHA, TEP
RWR78#R681%&	0.681	10	S, W, N, Z	B, D, F	S	P, R	DAL, SHA, TEP
RWR78#R690%&	0.690	10	S, W, N, Z	B, D	S	P, R	DAL, SHA, TEP
RWR78#R698%&	0.698	10	S, W, N, Z	B, D, F	S	P, R	DAL, SHA, TEP
RWR78#R706%&	0.706	10	S, W, N, Z	B, D	S	P, R	DAL, SHA, TEP
RWR78#R715%&	0.715	10	S, W, N, Z	B, D, F	S	P, R	DAL, SHA, TEP
RWR78#R723%&	0.723	10	S, W, N, Z	B, D	S	P, R	DAL, SHA, TEP
	Resistance	Power	Terminal	Resistance	Level 1	Level 2	
Part Number	Value (Ohms)	Rating (W)	Characteristic (#)	Tolerance (%)	(FRL)(&)	(FRL)(&)	Manufacturer
RWR78#R732%&	0.732	10	S, W, N, Z	B, D, F	S	P, R	DAL, SHA, TEP
RWR78#R741%&	0.741	10	S, W, N, Z	B, D	S	P, R	DAL, SHA, TEP
RWR78#R750%&	0.750	10	S, W, N, Z	B, D, F	S	P, R	DAL, SHA, TEP
RWR78#R759%&	0.759	10	S, W, N, Z	B, D	S	P, R	DAL, SHA, TEP
RWR78#R768%&	0.768	10	S, W, N, Z	B, D, F	S	P, R	DAL, SHA, TEP
RWR78#R776%&	0.776	10	S, W, N, Z	B, D	S	P, R	DAL, SHA, TEP
RWR78#R787%&	0.787	10	S, W, N, Z	B, D, F	S	P, R	DAL, SHA, TEP
	Resistance	Power	Terminal	Resistance	Level 1	Level 2	
Part Number	Value (Ohms)	Rating (W)	Characteristic (#)	Tolerance (%)	(FRL)(&)	(FRL)(&)	Manufacturer
RWR78#R796%&	0.796	10	S, W, N, Z	B, D	S	P, R	DAL, SHA, TEP
RWR78#R806%&	0.806	10	S, W, N, Z	B, D, F	S	P, R	DAL, SHA, TEP
RWR78#R816%&	0.816	10	S, W, N, Z	B, D	S	P, R	DAL, SHA, TEP
RWR78#R825%&	0.825	10	S, W, N, Z	B, D, F	S	P, R	DAL, SHA, TEP
RWR78#R835%&	0.835	10	S, W, N, Z	B, D	S	P, R	DAL, SHA, TEP
RWR78#R845%&	0.845	10	S, W, N, Z	B, D, F	S	P, R	DAL, SHA, TEP
RWR78#R856%&	0.856	10	S, W, N, Z	B, D	S	P, R	DAL, SHA, TEP
	Resistance	Power	Terminal	Resistance	Level 1	Level 2	
Part Number	Value (Ohms)	Rating (W)	Characteristic (#)	Tolerance (%)	(FRL)(&)	(FRL)(&)	Manufacturer
RWR78#R866%&	0.866	10	S, W, N, Z	B, D, F	S	P, R	DAL, SHA, TEP
RWR78#R876%&	0.876	10	S, W, N, Z	B, D	S	P, R	DAL, SHA, TEP
RWR78#R887%&	0.887	10	S, W, N, Z	B, D, F	S	P, R	DAL, SHA, TEP
RWR78#R898%&	0.898	10	S, W, N, Z	B, D	S	P, R	DAL, SHA, TEP
RWR78#R909%&	0.909	10	S, W, N, Z	B, D, F	S	P, R	DAL, SHA, TEP
RWR78#R920%&	0.920	10	S, W, N, Z	B, D	S	P, R	DAL, SHA, TEP
RWR78#R931%&	0.931	10	S, W, N, Z	B, D, F	S	P, R	DAL, SHA, TEP

	Resistance	Power	Terminal	Resistance	Level 1	Level 2	
Part Number	Value (Ohms)	Rating (W)	Characteristic (#)	Tolerance (%)	(FRL)(&)	(FRL)(&)	Manufacturer
RWR78#R942%&	0.942	10	S, W, N, Z	B, D	S	P, R	DAL, SHA, TEP
RWR78#R953%&	0.953	10	S, W, N, Z	B, D, F	S	P, R	DAL, SHA, TEP
RWR78#R965%&	0.965	10	S, W, N, Z	B, D	S	P, R	DAL, SHA, TEP
RWR78#R976%&	0.976	10	S, W, N, Z	B, D, F	S	P, R	DAL, SHA, TEP
RWR78#R988%&	0.988	10	S, W, N, Z	B, D	S	P, R	DAL, SHA, TEP
	Resistance	Power	Terminal	Resistance	Level 1	Level 2	
Part Number	Value (Ohms)	Rating (W)	Characteristic (#)	Tolerance (%)	(FRL)(&)	(FRL)(&)	Manufacturer

RWR78 Wirewound Resistors: 1.00 Ohms through 9.88 Ohms

	Resistance	Power	Terminal	Resistance	Level 1	Level 2	
Part Number	Value (Ohms)	Rating (W)	Characteristic (#)	Tolerance (%)	(FRL)(&)	(FRL)(&)	Manufacturer
RWR78#1R00%&	1.00	10	S, W, N, Z	B, D, F	S	P, R	DAL, SHA, TEP
RWR78#1R01%&	1.01	10	S, W, N, Z	B, D	S	P, R	DAL, SHA, TEP
RWR78#1R02%&	1.02	10	S, W, N, Z	B, D, F	S	P, R	DAL, SHA, TEP
RWR78#1R04%&	1.04	10	S, W, N, Z	B, D	S	P, R	DAL, SHA, TEP
RWR78#1R05%&	1.05	10	S, W, N, Z	B, D, F	S	P, R	DAL, SHA, TEP
RWR78#1R06%&	1.06	10	S, W, N, Z	B, D	S	P, R	DAL, SHA, TEP
RWR78#1R07%&	1.07	10	S, W, N, Z	B, D, F	S	P, R	DAL, SHA, TEP
	Resistance	Power	Terminal	Resistance	Level 1	Level 2	
Part Number	Value (Ohms)	Rating (W)	Characteristic (#)	Tolerance (%)	(FRL)(&)	(FRL)(&)	Manufacturer
RWR78#1R09%&	1.09	10	S, W, N, Z	B, D	S	P, R	DAL, SHA, TEP
RWR78#1R10%&	1.10	10	S, W, N, Z	B, D, F	S	P, R	DAL, SHA, TEP
RWR78#1R11%&	1.11	10	S, W, N, Z	B, D	S	P, R	DAL, SHA, TEP
RWR78#1R13%&	1.13	10	S, W, N, Z	B, D, F	S	P, R	DAL, SHA, TEP
RWR78#1R14%&	1.14	10	S, W, N, Z	B, D	S	P, R	DAL, SHA, TEP
RWR78#1R15%&	1.15	10	S, W, N, Z	B, D, F	S	P, R	DAL, SHA, TEP
RWR78#1R17%&	1.17	10	S, W, N, Z	B, D	S	P, R	DAL, SHA, TEP
	Resistance	Power	Terminal	Resistance	Level 1	Level 2	
Part Number	Value (Ohms)	Rating (W)	Characteristic (#)	Tolerance (%)	(FRL)(&)	(FRL)(&)	Manufacturer
RWR78#1R18%&	1.18	10	S, W, N, Z	B, D, F	S	P, R	DAL, SHA, TEP
RWR78#1R20%&	1.20	10	S, W, N, Z	B, D	S	P, R	DAL, SHA, TEP
RWR78#1R21%&	1.21	10	S, W, N, Z	B, D, F	S	P, R	DAL, SHA, TEP
RWR78#1R23%&	1.23	10	S, W, N, Z	B, D	S	P, R	DAL, SHA, TEP
RWR78#1R24%&	1.24	10	S, W, N, Z	B, D, F	S	P, R	DAL, SHA, TEP
RWR78#1R26%&	1.26	10	S, W, N, Z	B, D	S	P, R	DAL, SHA, TEP
RWR78#1R27%&	1.27	10	S, W, N, Z	B, D, F	S	P, R	DAL, SHA, TEP
	Resistance	Power	Terminal	Resistance	Level 1	Level 2	
Part Number	Value (Ohms)	Rating (W)	Characteristic (#)	Tolerance (%)	(FRL)(&)	(FRL)(&)	Manufacturer
RWR78#1R29%&	1.29	10	S, W, N, Z	B, D	S	P, R	DAL, SHA, TEP
RWR78#1R30%&	1.30	10	S, W, N, Z	B, D, F	S	P, R	DAL, SHA, TEP
RWR78#1R32%&	1.32	10	S, W, N, Z	B, D	S	P, R	DAL, SHA, TEP
RWR78#1R33%&	1.33	10	S, W, N, Z	B, D, F	S	P, R	DAL, SHA, TEP

RWR78#1R35%&	1.35	10	S, W, N, Z	B, D	S	P, R	DAL, SHA, TEP
RWR78#1R37%&	1.37	10	S, W, N, Z	B, D, F	S	P, R	DAL, SHA, TEP
RWR78#1R38%&	1.38	10	S, W, N, Z	B, D	S	P, R	DAL, SHA, TEP
	Resistance	Power	Terminal	Resistance	Level 1	Level 2	
Part Number	Value (Ohms)	Rating (W)	Characteristic (#)	Tolerance (%)	(FRL)(&)	(FRL)(&)	Manufacturer
RWR78#1R40%&	1.40	10	S, W, N, Z	B, D, F	S	P, R	DAL, SHA, TEP
RWR78#1R42%&	1.42	10	S, W, N, Z	B, D	S	P, R	DAL, SHA, TEP
RWR78#1R43%&	1.43	10	S, W, N, Z	B, D, F	S	P, R	DAL, SHA, TEP
RWR78#1R45%&	1.45	10	S, W, N, Z	B, D	S	P, R	DAL, SHA, TEP
RWR78#1R47%&	1.47	10	S, W, N, Z	B, D, F	S	P, R	DAL, SHA, TEP
RWR78#1R49%&	1.49	10	S, W, N, Z	B, D	S	P, R	DAL, SHA, TEP
RWR78#1R50%&	1.50	10	S, W, N, Z	B, D, F	S	P, R	DAL, SHA, TEP
	Resistance	Power	Terminal	Resistance	Level 1	Level 2	
Part Number	Value (Ohms)	Rating (W)	Characteristic (#)	Tolerance (%)	(FRL)(&)	(FRL)(&)	Manufacturer
RWR78#1R52%&	1.52	10	S, W, N, Z	B, D	S	P, R	DAL, SHA, TEP
RWR78#1R54%&	1.54	10	S, W, N, Z	B, D, F	S	P, R	DAL, SHA, TEP
RWR78#1R56%&	1.56	10	S, W, N, Z	B, D	S	P, R	DAL, SHA, TEP
RWR78#1R58%&	1.58	10	S, W, N, Z	B, D, F	S	P, R	DAL, SHA, TEP
RWR78#1R60%&	1.60	10	S, W, N, Z	B, D	S	P, R	DAL, SHA, TEP
RWR78#1R62%&	1.62	10	S, W, N, Z	B, D, F	S	P, R	DAL, SHA, TEP
RWR78#1R64%&	1.64	10	S, W, N, Z	B, D	S	P, R	DAL, SHA, TEP
	Resistance	Power	Terminal	Resistance	Level 1	Level 2	
Part Number	Value (Ohms)	Rating (W)	Characteristic (#)	Tolerance (%)	(FRL)(&)	(FRL)(&)	Manufacturer
RWR78#1R65%&	1.65	10	S, W, N, Z	B, D, F	S	P, R	DAL, SHA, TEP
RWR78#1R67%&	1.67	10	S, W, N, Z	B, D	S	P, R	DAL, SHA, TEP
RWR78#1R69%&	1.69	10	S, W, N, Z	B, D, F	S	P, R	DAL, SHA, TEP
RWR78#1R72%&	1.72	10	S, W, N, Z	B, D	S	P, R	DAL, SHA, TEP
RWR78#1R74%&	1.74	10	S, W, N, Z	B, D, F	S	P, R	DAL, SHA, TEP
RWR78#1R76%&	1.76	10	S, W, N, Z	B, D	S	P, R	DAL, SHA, TEP
	Resistance	Power	Terminal	Resistance	Level 1	Level 2	
Part Number	Value (Ohms)	Rating (W)	Characteristic (#)	Tolerance (%)	(FRL)(&)	(FRL)(&)	Manufacturer
RWR78#1R78#&	1.78	10	S, W, N, Z	B, D, F	S	P, R	DAL, SHA, TEP
RWR78#1R80%&	1.80	10	S, W, N, Z	B, D, F	S	P, R	DAL, SHA, TEP
RWR78#1R82%&	1.82	10	S, W, N, Z	B, D, F	S	P, R	DAL, SHA, TEP
RWR78#1R84%&	1.84	10	S, W, N, Z	B, D	S	P, R	DAL, SHA, TEP
RWR78#1R87%&	1.87	10	S, W, N, Z	B, D, F	S	P, R	DAL, SHA, TEP
RWR78#1R89%&	1.89	10	S, W, N, Z	B, D	S	P, R	DAL, SHA, TEP
RWR78#1R91%&	1.91	10	S, W, N, Z	B, D, F	S	P, R	DAL, SHA, TEP
	Resistance	Power	Terminal	Resistance	Level 1	Level 2	
Part Number	Value (Ohms)	Rating (W)	Characteristic (#)	Tolerance (%)	(FRL)(&)	(FRL)(&)	Manufacturer
RWR78#1R93%&	1.93	10	S, W, N, Z	B, D	S	P, R	DAL, SHA, TEP
RWR78#1R96%&	1.96	10	S, W, N, Z	B, D, F	S	P, R	DAL, SHA, TEP
RWR78#1R98%&	1.98	10	S, W, N, Z	B, D	S	P, R	DAL, SHA, TEP
RWR78#2R00%&	2.00	10	S, W, N, Z	B, D, F	S	P, R	DAL, SHA, TEP
RWR78#2R03%&	2.03	10	S, W, N, Z	B, D	S	P, R	DAL, SHA, TEP
RWR78#2R05%&	2.05	10	S, W, N, Z	B, D, F	S	P, R	DAL, SHA, TEP
RWR78#2R08%&	2.08	10	S, W, N, Z	B, D	S	P, R	DAL, SHA, TEP

	Resistance	Power	Terminal	Resistance	Level 1	Level 2	
Part Number	Value (Ohms)	Rating (W)	Characteristic (#)	Tolerance (%)	(FRL)(&)	(FRL)(&)	Manufacturer
RWR78#2R10%&	2.10	10	S, W, N, Z	B, D, F	S	P, R	DAL, SHA, TEP
RWR78#2R13%&	2.13	10	S, W, N, Z	B, D	S	P, R	DAL, SHA, TEP
RWR78#2R15%&	2.15	10	S, W, N, Z	B, D, F	S	P, R	DAL, SHA, TEP
RWR78#2R18%&	2.18	10	S, W, N, Z	B, D	S	P, R	DAL, SHA, TEP
RWR78#2R21%&	2.21	10	S, W, N, Z	B, D, F	S	P, R	DAL, SHA, TEP
RWR78#2R23%&	2.23	10	S, W, N, Z	B, D	S	P, R	DAL, SHA, TEP
RWR78#2R26%&	2.26	10	S, W, N, Z	B, D, F	S	P, R	DAL, SHA, TEP
	Resistance	Power	Terminal	Resistance	Level 1	Level 2	
Part Number	Value (Ohms)	Rating (W)	Characteristic (#)	Tolerance (%)	(FRL)(&)	(FRL)(&)	Manufacturer
RWR78#2R29%&	2.29	10	S, W, N, Z	B, D	S	P, R	DAL, SHA, TEP
RWR78#2R32%&	2.32	10	S, W, N, Z	B, D, F	S	P, R	DAL, SHA, TEP
RWR78#2R34%&	2.34	10	S, W, N, Z	B, D	S	P, R	DAL, SHA, TEP
RWR78#2R37%&	2.37	10	S, W, N, Z	B, D, F	S	P, R	DAL, SHA, TEP
RWR78#2R40%&	2.40	10	S, W, N, Z	B, D	S	P, R	DAL, SHA, TEP
RWR78#2R43%&	2.43	10	S, W, N, Z	B, D, F	S	P, R	DAL, SHA, TEP
RWR78#2R46%&	2.46	10	S, W, N, Z	B, D	S	P, R	DAL, SHA, TEP
	Resistance	Power	Terminal	Resistance	Level 1	Level 2	
Part Number	Value (Ohms)	Rating (W)	Characteristic (#)	Tolerance (%)	(FRL)(&)	(FRL)(&)	Manufacturer
RWR78#2R49%&	2.49	10	S, W, N, Z	B, D, F	S	P, R	DAL, SHA, TEP
RWR78#2R52%&	2.52	10	S, W, N, Z	B, D	S	P, R	DAL, SHA, TEP
RWR78#2R55%&	2.55	10	S, W, N, Z	B, D, F	S	P, R	DAL, SHA, TEP
RWR78#2R58%&	2.58	10	S, W, N, Z	B, D	S	P, R	DAL, SHA, TEP
RWR78#2R61%&	2.61	10	S, W, N, Z	B, D, F	S	P, R	DAL, SHA, TEP
RWR78#2R64%&	2.64	10	S, W, N, Z	B, D	S	P, R	DAL, SHA, TEP
RWR78#2R67%&	2.67	10	S, W, N, Z	B, D, F	S	P, R	DAL, SHA, TEP
	Resistance	Power	Terminal	Resistance	Level 1	Level 2	
Part Number	Value (Ohms)	Rating (W)	Characteristic (#)	Tolerance (%)	(FRL)(&)	(FRL)(&)	Manufacturer
RWR78#2R71%&	2.71	10	S, W, N, Z	B, D	S	P, R	DAL, SHA, TEP
RWR78#2R74%&	2.74	10	S, W, N, Z	B, D, F	S	P, R	DAL, SHA, TEP
RWR78#2R77%&	2.77	10	S, W, N, Z	B, D	S	P, R	DAL, SHA, TEP
RWR78#2R80%&	2.80	10	S, W, N, Z	B, D, F	S	P, R	DAL, SHA, TEP
RWR78#2R84%&	2.84	10	S, W, N, Z	B, D	S	P, R	DAL, SHA, TEP
RWR78#2R87%&	2.87	10	S, W, N, Z	B, D, F	S	P, R	DAL, SHA, TEP
RWR78#2R91%&	2.91	10	S, W, N, Z	B, D	S	P, R	DAL, SHA, TEP
	Resistance	Power	Terminal	Resistance	Level 1	Level 2	
Part Number	Value (Ohms)	Rating (W)	Characteristic (#)	Tolerance (%)	(FRL)(&)	(FRL)(&)	Manufacturer
RWR78#2R94%&	2.94	10	S, W, N, Z	B, D, F	S	P, R	DAL, SHA, TEP
RWR78#2R98%&	2.98	10	S, W, N, Z	B, D	S	P, R	DAL, SHA, TEP
RWR78#3R01%&	3.01	10	S, W, N, Z	B, D, F	S	P, R	DAL, SHA, TEP
RWR78#3R05%&	3.05	10	S, W, N, Z	B, D	S	P, R	DAL, SHA, TEP
RWR78#3R09%&	3.09	10	S, W, N, Z	B, D, F	S	P, R	DAL, SHA, TEP
RWR78#3R12%&	3.12	10	S, W, N, Z	B, D	S	P, R	DAL, SHA, TEP
RWR78#3R16%&	3.16	10	S, W, N, Z	B, D, F	S	P, R	DAL, SHA, TEP
	Resistance	Power	Terminal	Resistance	Level 1	Level 2	
Part Number	Value (Ohms)	Rating (W)	Characteristic (#)	Tolerance (%)	(FRL)(&)	(FRL)(&)	Manufacturer

RWR78#3R20%&	3.20	10	S, W, N, Z	B, D	S	P, R	DAL, SHA, TEP
RWR78#3R24%&	3.24	10	S, W, N, Z	B, D, F	S	P, R	DAL, SHA, TEP
RWR78#3R28%&	3.28	10	S, W, N, Z	B, D	S	P, R	DAL, SHA, TEP
RWR78#3R32%&	3.32	10	S, W, N, Z	B, D, F	S	P, R	DAL, SHA, TEP
RWR78#3R36%&	3.36	10	S, W, N, Z	B, D	S	P, R	DAL, SHA, TEP
RWR78#3R40%&	3.40	10	S, W, N, Z	B, D, F	S	P, R	DAL, SHA, TEP
RWR78#3R44%&	3.44	10	S, W, N, Z	B, D	S	P, R	DAL, SHA, TEP
	Resistance	Power	Terminal	Resistance	Level 1	Level 2	
Part Number	Value (Ohms)	Rating (W)	Characteristic (#)	Tolerance (%)	(FRL)(&)	(FRL)(&)	Manufacturer
RWR78#3R48%&	3.48	10	S, W, N, Z	B, D, F	S	P, R	DAL, SHA, TEP
RWR78#3R52%&	3.52	10	S, W, N, Z	B, D	S	P, R	DAL, SHA, TEP
RWR78#3R57%&	3.57	10	S, W, N, Z	B, D, F	S	P, R	DAL, SHA, TEP
RWR78#3R61%&	3.61	10	S, W, N, Z	B, D	S	P, R	DAL, SHA, TEP
RWR78#3R65%&	3.65	10	S, W, N, Z	B, D, F	S	P, R	DAL, SHA, TEP
RWR78#3R70%&	3.70	10	S, W, N, Z	B, D	S	P, R	DAL, SHA, TEP
RWR78#3R74%&	3.74	10	S, W, N, Z	B, D, F	S	P, R	DAL, SHA, TEP
	Resistance	Power	Terminal	Resistance	Level 1	Level 2	
Part Number	Value (Ohms)	Rating (W)	Characteristic (#)	Tolerance (%)	(FRL)(&)	(FRL)(&)	Manufacturer
RWR78#3R79%&	3.79	10	S, W, N, Z	B, D	S	P, R	DAL, SHA, TEP
RWR78#3R83%&	3.83	10	S, W, N, Z	B, D, F	S	P, R	DAL, SHA, TEP
RWR78#3R88%&	3.88	10	S, W, N, Z	B, D	S	P, R	DAL, SHA, TEP
RWR78#3R92%&	3.92	10	S, W, N, Z	B, D, F	S	P, R	DAL, SHA, TEP
RWR78#3R97%&	3.97	10	S, W, N, Z	B, D	S	P, R	DAL, SHA, TEP
RWR78#4R02%&	4.02	10	S, W, N, Z	B, D, F	S	P, R	DAL, SHA, TEP
RWR78#4R07%&	4.07	10	S, W, N, Z	B, D	S	P, R	DAL, SHA, TEP
	Resistance	Power	Terminal	Resistance	Level 1	Level 2	
Part Number	Value (Ohms)	Rating (W)	Characteristic (#)	Tolerance (%)	(FRL)(&)	(FRL)(&)	Manufacturer
RWR78#4R12%&	4.12	10	S, W, N, Z	B, D, F	S	P, R	DAL, SHA, TEP
RWR78#4R17%&	4.17	10	S, W, N, Z	B, D	S	P, R	DAL, SHA, TEP
RWR78#4R22%&	4.22	10	S, W, N, Z	B, D, F	S	P, R	DAL, SHA, TEP
RWR78#4R27%&	4.27	10	S, W, N, Z	B, D	S	P, R	DAL, SHA, TEP
RWR78#4R32%&	4.32	10	S, W, N, Z	B, D, F	S	P, R	DAL, SHA, TEP
RWR78#4R37%&	4.37	10	S, W, N, Z	B, D	S	P, R	DAL, SHA, TEP
RWR78#4R42%&	4.42	10	S, W, N, Z	B, D, F	S	P, R	DAL, SHA, TEP
	Resistance	Power	Terminal	Resistance	Level 1	Level 2	
Part Number	Value (Ohms)	Rating (W)	Characteristic (#)	Tolerance (%)	(FRL)(&)	(FRL)(&)	Manufacturer
RWR78#4R48%&	4.48	10	S, W, N, Z	B, D	S	P, R	DAL, SHA, TEP
RWR78#4R53%&	4.53	10	S, W, N, Z	B, D, F	S	P, R	DAL, SHA, TEP
RWR78#4R59%&	4.59	10	S, W, N, Z	B, D	S	P, R	DAL, SHA, TEP
RWR78#4R64%&	4.64	10	S, W, N, Z	B, D, F	S	P, R	DAL, SHA, TEP
RWR78#4R70%&	4.70	10	S, W, N, Z	B, D	S	P, R	DAL, SHA, TEP
RWR78#4R75%&	4.75	10	S, W, N, Z	B, D, F	S	P, R	DAL, SHA, TEP
RWR78#4R81%&	4.81	10	S, W, N, Z	B, D	S	P, R	DAL, SHA, TEP
	Resistance	Power	Terminal	Resistance	Level 1	Level 2	
Part Number	Value (Ohms)	Rating (W)	Characteristic (#)	Tolerance (%)	(FRL)(&)	(FRL)(&)	Manufacturer
RWR78#4R87%&	4.87	10	S, W, N, Z	B, D, F	S	P, R	DAL, SHA, TEP
RWR78#4R93%&	4.93	10	S, W, N, Z	B, D	S	P, R	DAL, SHA, TEP

RWR78#4R99%&	4.99	10	S, W, N, Z	B, D, F	S	P, R	DAL, SHA, TEP
RWR78#5R05%&	5.05	10	S, W, N, Z	B, D	S	P, R	DAL, SHA, TEP
RWR78#5R11%&	5.11	10	S, W, N, Z	B, D, F	S	P, R	DAL, SHA, TEP
RWR78#5R17%&	5.17	10	S, W, N, Z	B, D	S	P, R	DAL, SHA, TEP
RWR78#5R23%&	5.23	10	S, W, N, Z	B, D, F	S	P, R	DAL, SHA, TEP
	Resistance	Power	Terminal	Resistance	Level 1	Level 2	
Part Number	Value (Ohms)	Rating (W)	Characteristic (#)	Tolerance (%)	(FRL)(&)	(FRL)(&)	Manufacturer
RWR78#5R30%&	5.30	10	S, W, N, Z	B, D	S	P, R	DAL, SHA, TEP
RWR78#5R36%&	5.36	10	S, W, N, Z	B, D, F	S	P, R	DAL, SHA, TEP
RWR78#5R42%&	5.42	10	S, W, N, Z	B, D	S	P, R	DAL, SHA, TEP
RWR78#5R49%&	5.49	10	S, W, N, Z	B, D, F	S	P, R	DAL, SHA, TEP
RWR78#5R56%&	5.56	10	S, W, N, Z	B, D	S	P, R	DAL, SHA, TEP
RWR78#5R62%&	5.62	10	S, W, N, Z	B, D, F	S	P, R	DAL, SHA, TEP
RWR78#5R69%&	5.69	10	S, W, N, Z	B, D	S	P, R	DAL, SHA, TEP
	Resistance	Power	Terminal	Resistance	Level 1	Level 2	
Part Number	Value (Ohms)	Rating (W)	Characteristic (#)	Tolerance (%)	(FRL)(&)	(FRL)(&)	Manufacturer
RWR78#5R76%&	5.76	10	S, W, N, Z	B, D, F	S	P, R	DAL, SHA, TEP
RWR78#5R83%&	5.83	10	S, W, N, Z	B, D	S	P, R	DAL, SHA, TEP
RWR78#5R90%&	5.90	10	S, W, N, Z	B, D, F	S	P, R	DAL, SHA, TEP
RWR78#5R97%&	5.97	10	S, W, N, Z	B, D	S	P, R	DAL, SHA, TEP
RWR78#6R04%&	6.04	10	S, W, N, Z	B, D, F	S	P, R	DAL, SHA, TEP
RWR78#6R12%&	6.12	10	S, W, N, Z	B, D	S	P, R	DAL, SHA, TEP
RWR78#6R19%&	6.19	10	S, W, N, Z	B, D, F	S	P, R	DAL, SHA, TEP
	Resistance	Power	Terminal	Resistance	Level 1	Level 2	
Part Number	Value (Ohms)	Rating (W)	Characteristic (#)	Tolerance (%)	(FRL)(&)	(FRL)(&)	Manufacturer
RWR78#6R26%&	6.26	10	S, W, N, Z	B, D	S	P, R	DAL, SHA, TEP
RWR78#6R34%&	6.34	10	S, W, N, Z	B, D, F	S	P, R	DAL, SHA, TEP
RWR78#6R42%&	6.42	10	S, W, N, Z	B, D	S	P, R	DAL, SHA, TEP
RWR78#6R49%&	6.49	10	S, W, N, Z	B, D, F	S	P, R	DAL, SHA, TEP
RWR78#6R57%&	6.57	10	S, W, N, Z	B, D	S	P, R	DAL, SHA, TEP
RWR78#6R65%&	6.65	10	S, W, N, Z	B, D, F	S	P, R	DAL, SHA, TEP
	Resistance	Power	Terminal	Resistance	Level 1	Level 2	
Part Number	Value (Ohms)	Rating (W)	Characteristic (#)	Tolerance (%)	(FRL)(&)	(FRL)(&)	Manufacturer
RWR78#6R73%&	6.73	10	S, W, N, Z	B, D	S	P, R	DAL, SHA, TEP
RWR78#6R81%&	6.81	10	S, W, N, Z	B, D, F	S	P, R	DAL, SHA, TEP
RWR78#6R90%&	6.90	10	S, W, N, Z	B, D	S	P, R	DAL, SHA, TEP
RWR78#6R98%&	6.98	10	S, W, N, Z	B, D, F	S	P, R	DAL, SHA, TEP
RWR78#7R06%&	7.06	10	S, W, N, Z	B, D	S	P, R	DAL, SHA, TEP
RWR78#7R15%&	7.15	10	S, W, N, Z	B, D, F	S	P, R	DAL, SHA, TEP
RWR78#7R23%&	7.23	10	S, W, N, Z	B, D	S	P, R	DAL, SHA, TEP
	Resistance	Power	Terminal	Resistance	Level 1	Level 2	
Part Number	Value (Ohms)	Rating (W)	Characteristic (#)	Tolerance (%)	(FRL)(&)	(FRL)(&)	Manufacturer
RWR78#7R32%&	7.32	10	S, W, N, Z	B, D, F	S	P, R	DAL, SHA, TEP
RWR78#7R41%&	7.41	10	S, W, N, Z	B, D	S	P, R	DAL, SHA, TEP
RWR78#7R50%&	7.50	10	S, W, N, Z	B, D, F	S	P, R	DAL, SHA, TEP
RWR78#7R59%&	7.59	10	S, W, N, Z	B, D	S	P, R	DAL, SHA, TEP
RWR78#7R68%&	7.68	10	S, W, N, Z	B, D, F	S	P, R	DAL, SHA, TEP

RWR78#7R77%&	7.77	10	S, W, N, Z	B, D	S	P, R	DAL, SHA, TEP
RWR78#7R87%&	7.87	10	S, W, N, Z	B, D, F	S	P, R	DAL, SHA, TEP
	Resistance	Power	Terminal	Resistance	Level 1	Level 2	
Part Number	Value (Ohms)	Rating (W)	Characteristic (#)	Tolerance (%)	(FRL)(&)	(FRL)(&)	Manufacturer
RWR78#7R96%&	7.96	10	S, W, N, Z	B, D	S	P, R	DAL, SHA, TEP
RWR78#8R06%&	8.06	10	S, W, N, Z	B, D, F	S	P, R	DAL, SHA, TEP
RWR78#8R16%&	8.16	10	S, W, N, Z	B, D	S	P, R	DAL, SHA, TEP
RWR78#8R25%&	8.25	10	S, W, N, Z	B, D, F	S	P, R	DAL, SHA, TEP
RWR78#8R35%&	8.35	10	S, W, N, Z	B, D	S	P, R	DAL, SHA, TEP
RWR78#8R45%&	8.45	10	S, W, N, Z	B, D, F	S	P, R	DAL, SHA, TEP
RWR78#8R56%&	8.56	10	S, W, N, Z	B, D	S	P, R	DAL, SHA, TEP
	Resistance	Power	Terminal	Resistance	Level 1	Level 2	
Part Number	Value (Ohms)	Rating (W)	Characteristic (#)	Tolerance (%)	(FRL)(&)	(FRL)(&)	Manufacturer
RWR78#8R66%&	8.66	10	S, W, N, Z	B, D, F	S	P, R	DAL, SHA, TEP
RWR78#8R76%&	8.76	10	S, W, N, Z	B, D	S	P, R	DAL, SHA, TEP
RWR78#8R87%&	8.87	10	S, W, N, Z	B, D, F	S	P, R	DAL, SHA, TEP
RWR78#8R98%&	8.98	10	S, W, N, Z	B, D	S	P, R	DAL, SHA, TEP
RWR78#9R09%&	9.09	10	S, W, N, Z	B, D, F	S	P, R	DAL, SHA, TEP
RWR78#9R20%&	9.20	10	S, W, N, Z	B, D	S	P, R	DAL, SHA, TEP
RWR78#9R31%&	9.31	10	S, W, N, Z	B, D, F	S	P, R	DAL, SHA, TEP
	Resistance	Power	Terminal	Resistance	Level 1	Level 2	
Part Number	Value (Ohms)	Rating (W)	Characteristic (#)	Tolerance (%)	(FRL)(&)	(FRL)(&)	Manufacturer
RWR78#9R42%&	9.42	10	S, W, N, Z	B, D	S	P, R	DAL, SHA, TEP
RWR78#9R53%&	9.53	10	S, W, N, Z	B, D, F	S	P, R	DAL, SHA, TEP
RWR78#9R65%&	9.65	10	S, W, N, Z	B, D	S	P, R	DAL, SHA, TEP
RWR78#9R76%&	9.76	10	S, W, N, Z	B, D, F	S	P, R	DAL, SHA, TEP
RWR78#9R88%&	9.88	10	S, W, N, Z	B, D	S	P, R	DAL, SHA, TEP

RWR78 Wirewound Resistors: 10.0 Ohms through 98.8 Ohms

	Resistance	Power	Terminal	Resistance	Level 1	Level 2	
Part Number	Value (Ohms)	Rating (W)	Characteristic (#)	Tolerance (%)	(FRL)(&)	(FRL)(&)	Manufacturer
RWR78#10R0%&	10.0	10	S, W, N, Z	B, D, F	S	P, R	DAL, SHA, TEP
RWR78#10R1%&	10.1	10	S, W, N, Z	B, D	S	P, R	DAL, SHA, TEP
RWR78#10R2%&	10.2	10	S, W, N, Z	B, D, F	S	P, R	DAL, SHA, TEP
RWR78#10R4%&	10.4	10	S, W, N, Z	B, D	S	P, R	DAL, SHA, TEP
RWR78#10R5%&	10.5	10	S, W, N, Z	B, D, F	S	P, R	DAL, SHA, TEP
RWR78#10R6%&	10.6	10	S, W, N, Z	B, D	S	P, R	DAL, SHA, TEP
RWR78#10R7%&	10.7	10	S, W, N, Z	B, D, F	S	P, R	DAL, SHA, TEP
	Resistance	Power	Terminal	Resistance	Level 1	Level 2	
Part Number	Value (Ohms)	Rating (W)	Characteristic (#)	Tolerance (%)	(FRL)(&)	(FRL)(&)	Manufacturer
RWR78#10R9%&	10.9	10	S, W, N, Z	B, D	S	P, R	DAL, SHA, TEP
RWR78#11R0%&	11.0	10	S, W, N, Z	B, D, F	S	P, R	DAL, SHA, TEP
RWR78#11R1%&	11.1	10	S, W, N, Z	B, D	S	P, R	DAL, SHA, TEP
RWR78#11R3%&	11.3	10	S, W, N, Z	B, D, F	S	P, R	DAL, SHA, TEP

RWR78#11R4%&	11.4	10	S, W, N, Z	B, D	S	P, R	DAL, SHA, TEP
RWR78#11R5%&	11.5	10	S, W, N, Z	B, D, F	S	P, R	DAL, SHA, TEP
RWR78#11R7%&	11.7	10	S, W, N, Z	B, D	S	P, R	DAL, SHA, TEP
	Resistance	Power	Terminal	Resistance	Level 1	Level 2	
Part Number	Value (Ohms)	Rating (W)	Characteristic (#)	Tolerance (%)	(FRL)(&)	(FRL)(&)	Manufacturer
RWR78#11R8%&	11.8	10	S, W, N, Z	B, D, F	S	P, R	DAL, SHA, TEP
RWR78#12R0%&	12.0	10	S, W, N, Z	B, D	S	P, R	DAL, SHA, TEP
RWR78#12R1%&	12.1	10	S, W, N, Z	B, D, F	S	P, R	DAL, SHA, TEP
RWR78#12R3%&	12.3	10	S, W, N, Z	B, D	S	P, R	DAL, SHA, TEP
RWR78#12R4%&	12.4	10	S, W, N, Z	B, D, F	S	P, R	DAL, SHA, TEP
RWR78#12R6%&	12.6	10	S, W, N, Z	B, D	S	P, R	DAL, SHA, TEP
RWR78#12R7%&	12.7	10	S, W, N, Z	B, D, F	S	P, R	DAL, SHA, TEP
	Resistance	Power	Terminal	Resistance	Level 1	Level 2	
Part Number	Value (Ohms)	Rating (W)	Characteristic (#)	Tolerance (%)	(FRL)(&)	(FRL)(&)	Manufacturer
RWR78#12R9%&	12.9	10	S, W, N, Z	B, D	S	P, R	DAL, SHA, TEP
RWR78#13R0%&	13.0	10	S, W, N, Z	B, D, F	S	P, R	DAL, SHA, TEP
RWR78#13R2%&	13.2	10	S, W, N, Z	B, D	S	P, R	DAL, SHA, TEP
RWR78#13R3%&	13.3	10	S, W, N, Z	B, D, F	S	P, R	DAL, SHA, TEP
RWR78#13R5%&	13.5	10	S, W, N, Z	B, D	S	P, R	DAL, SHA, TEP
RWR78#13R7%&	13.7	10	S, W, N, Z	B, D, F	S	P, R	DAL, SHA, TEP
RWR78#13R8%&	13.8	10	S, W, N, Z	B, D	S	P, R	DAL, SHA, TEP
	Resistance	Power	Terminal	Resistance	Level 1	Level 2	
Part Number	Value (Ohms)	Rating (W)	Characteristic (#)	Tolerance (%)	(FRL)(&)	(FRL)(&)	Manufacturer
RWR78#14R0%&	14.0	10	S, W, N, Z	B, D, F	S	P, R	DAL, SHA, TEP
RWR78#14R2%&	14.2	10	S, W, N, Z	B, D	S	P, R	DAL, SHA, TEP
RWR78#14R3%&	14.3	10	S, W, N, Z	B, D, F	S	P, R	DAL, SHA, TEP
RWR78#14R5%&	14.5	10	S, W, N, Z	B, D	S	P, R	DAL, SHA, TEP
RWR78#14R7%&	14.7	10	S, W, N, Z	B, D, F	S	P, R	DAL, SHA, TEP
RWR78#14R9%&	14.9	10	S, W, N, Z	B, D	S	P, R	DAL, SHA, TEP
RWR78#15R0%&	15.0	10	S, W, N, Z	B, D, F	S	P, R	DAL, SHA, TEP
	Resistance	Power	Terminal	Resistance	Level 1	Level 2	
Part Number	Value (Ohms)	Rating (W)	Characteristic (#)	Tolerance (%)	(FRL)(&)	(FRL)(&)	Manufacturer
RWR78#15R2%&	15.2	10	S, W, N, Z	B, D	S	P, R	DAL, SHA, TEP
RWR78#15R4%&	15.4	10	S, W, N, Z	B, D, F	S	P, R	DAL, SHA, TEP
RWR78#15R6%&	15.6	10	S, W, N, Z	B, D	S	P, R	DAL, SHA, TEP
RWR78#15R8%&	15.8	10	S, W, N, Z	B, D, F	S	P, R	DAL, SHA, TEP
RWR78#16R0%&	16.0	10	S, W, N, Z	B, D	S	P, R	DAL, SHA, TEP
RWR78#16R2%&	16.2	10	S, W, N, Z	B, D, F	S	P, R	DAL, SHA, TEP
RWR78#16R4%&	16.4	10	S, W, N, Z	B, D	S	P, R	DAL, SHA, TEP
	Resistance	Power	Terminal	Resistance	Level 1	Level 2	
Part Number	Value (Ohms)	Rating (W)	Characteristic (#)	Tolerance (%)	(FRL)(&)	(FRL)(&)	Manufacturer
RWR78#16R5%&	16.5	10	S, W, N, Z	B, D, F	S	P, R	DAL, SHA, TEP
RWR78#16R7%&	16.7	10	S, W, N, Z	B, D	S	P, R	DAL, SHA, TEP
RWR78#16R9%&	16.9	10	S, W, N, Z	B, D, F	S	P, R	DAL, SHA, TEP
RWR78#17R2%&	17.2	10	S, W, N, Z	B, D	S	P, R	DAL, SHA, TEP
RWR78#17R4%&	17.4	10	S, W, N, Z	B, D, F	S	P, R	DAL, SHA, TEP
RWR78#17R6%&	17.6	10	S, W, N, Z	B, D	S	P, R	DAL, SHA, TEP

	Resistance	Power	Terminal	Resistance	Level 1	Level 2	
Part Number	Value (Ohms)	Rating (W)	Characteristic (#)	Tolerance (%)	(FRL)(&)	(FRL)(&)	Manufacturer
RWR78#17R8%&	17.8	10	S, W, N, Z	B, D, F	S	P, R	DAL, SHA, TEP
RWR78#18R0%&	18.0	10	S, W, N, Z	B, D, F	S	P, R	DAL, SHA, TEP
RWR78#18R2%&	18.2	10	S, W, N, Z	B, D, F	S	P, R	DAL, SHA, TEP
RWR78#18R4%&	18.4	10	S, W, N, Z	B, D	S	P, R	DAL, SHA, TEP
RWR78#18R7%&	18.7	10	S, W, N, Z	B, D, F	S	P, R	DAL, SHA, TEP
RWR78#18R9%&	18.9	10	S, W, N, Z	B, D	S	P, R	DAL, SHA, TEP
RWR78#19R1%&	19.1	10	S, W, N, Z	B, D, F	S	P, R	DAL, SHA, TEP
	Resistance	Power	Terminal	Resistance	Level 1	Level 2	
Part Number	Value (Ohms)	Rating (W)	Characteristic (#)	Tolerance (%)	(FRL)(&)	(FRL)(&)	Manufacturer
RWR78#19R3%&	19.3	10	S, W, N, Z	B, D	S	P, R	DAL, SHA, TEP
RWR78#19R6%&	19.6	10	S, W, N, Z	B, D, F	S	P, R	DAL, SHA, TEP
RWR78#19R8%&	19.8	10	S, W, N, Z	B, D	S	P, R	DAL, SHA, TEP
RWR78#20R0%&	20.0	10	S, W, N, Z	B, D, F	S	P, R	DAL, SHA, TEP
RWR78#20R3%&	20.3	10	S, W, N, Z	B, D	S	P, R	DAL, SHA, TEP
RWR78#20R5%&	20.5	10	S, W, N, Z	B, D, F	S	P, R	DAL, SHA, TEP
RWR78#20R8%&	20.8	10	S, W, N, Z	B, D	S	P, R	DAL, SHA, TEP
	Resistance	Power	Terminal	Resistance	Level 1	Level 2	
Part Number	Value (Ohms)	Rating (W)	Characteristic (#)	Tolerance (%)	(FRL)(&)	(FRL)(&)	Manufacturer
RWR78#21R0%&	21.0	10	S, W, N, Z	B, D, F	S	P, R	DAL, SHA, TEP
RWR78#21R3%&	21.3	10	S, W, N, Z	B, D	S	P, R	DAL, SHA, TEP
RWR78#21R5%&	21.5	10	S, W, N, Z	B, D, F	S	P, R	DAL, SHA, TEP
RWR78#21R8%&	21.8	10	S, W, N, Z	B, D	S	P, R	DAL, SHA, TEP
RWR78#22R1%&	22.1	10	S, W, N, Z	B, D, F	S	P, R	DAL, SHA, TEP
RWR78#22R3%&	22.3	10	S, W, N, Z	B, D	S	P, R	DAL, SHA, TEP
RWR78#22R6%&	22.6	10	S, W, N, Z	B, D, F	S	P, R	DAL, SHA, TEP
	Resistance	Power	Terminal	Resistance	Level 1	Level 2	
Part Number	Value (Ohms)	Rating (W)	Characteristic (#)	Tolerance (%)	(FRL)(&)	(FRL)(&)	Manufacturer
RWR78#22R9%&	22.9	10	S, W, N, Z	B, D	S	P, R	DAL, SHA, TEP
RWR78#23R2%&	23.2	10	S, W, N, Z	B, D, F	S	P, R	DAL, SHA, TEP
RWR78#23R4%&	23.4	10	S, W, N, Z	B, D	S	P, R	DAL, SHA, TEP
RWR78#23R7%&	23.7	10	S, W, N, Z	B, D, F	S	P, R	DAL, SHA, TEP
RWR78#24R0%&	24.0	10	S, W, N, Z	B, D	S	P, R	DAL, SHA, TEP
RWR78#24R3%&	24.3	10	S, W, N, Z	B, D, F	S	P, R	DAL, SHA, TEP
RWR78#24R6%&	24.6	10	S, W, N, Z	B, D	S	P, R	DAL, SHA, TEP
	Resistance	Power	Terminal	Resistance	Level 1	Level 2	
Part Number	Value (Ohms)	Rating (W)	Characteristic (#)	Tolerance (%)	(FRL)(&)	(FRL)(&)	Manufacturer
RWR78#24R9%&	24.9	10	S, W, N, Z	B, D, F	S	P, R	DAL, SHA, TEP
RWR78#25R2%&	25.2	10	S, W, N, Z	B, D	S	P, R	DAL, SHA, TEP
RWR78#25R5%&	25.5	10	S, W, N, Z	B, D, F	S	P, R	DAL, SHA, TEP
RWR78#25R8%&	25.8	10	S, W, N, Z	B, D	S	P, R	DAL, SHA, TEP
RWR78#26R1%&	26.1	10	S, W, N, Z	B, D, F	S	P, R	DAL, SHA, TEP
RWR78#26R4%&	26.4	10	S, W, N, Z	B, D	S	P, R	DAL, SHA, TEP
RWR78#26R7%&	26.7	10	S, W, N, Z	B, D, F	S	P, R	DAL, SHA, TEP
	Resistance	Power	Terminal	Resistance	Level 1	Level 2	
Part Number	Value (Ohms)	Rating (W)	Characteristic (#)	Tolerance (%)	(FRL)(&)	(FRL)(&)	Manufacturer

RWR78#27R1%&	27.1	10	S, W, N, Z	B, D	S	P, R	DAL, SHA, TEP
RWR78#27R4%&	27.4	10	S, W, N, Z	B, D, F	S	P, R	DAL, SHA, TEP
RWR78#27R7%&	27.7	10	S, W, N, Z	B, D	S	P, R	DAL, SHA, TEP
RWR78#28R0%&	28.0	10	S, W, N, Z	B, D, F	S	P, R	DAL, SHA, TEP
RWR78#28R4%&	28.4	10	S, W, N, Z	B, D	S	P, R	DAL, SHA, TEP
RWR78#28R7%&	28.7	10	S, W, N, Z	B, D, F	S	P, R	DAL, SHA, TEP
RWR78#29R1%&	29.1	10	S, W, N, Z	B, D	S	P, R	DAL, SHA, TEP
	Resistance	Power	Terminal	Resistance	Level 1	Level 2	
Part Number	Value (Ohms)	Rating (W)	Characteristic (#)	Tolerance (%)	(FRL)(&)	(FRL)(&)	Manufacturer
RWR78#29R4%&	29.4	10	S, W, N, Z	B, D, F	S	P, R	DAL, SHA, TEP
RWR78#29R8%&	29.8	10	S, W, N, Z	B, D	S	P, R	DAL, SHA, TEP
RWR78#30R1%&	30.1	10	S, W, N, Z	B, D, F	S	P, R	DAL, SHA, TEP
RWR78#30R5%&	30.5	10	S, W, N, Z	B, D	S	P, R	DAL, SHA, TEP
RWR78#30R9%&	30.9	10	S, W, N, Z	B, D, F	S	P, R	DAL, SHA, TEP
RWR78#31R2%&	31.2	10	S, W, N, Z	B, D	S	P, R	DAL, SHA, TEP
RWR78#31R6%&	31.6	10	S, W, N, Z	B, D, F	S	P, R	DAL, SHA, TEP
	Resistance	Power	Terminal	Resistance	Level 1	Level 2	
Part Number	Value (Ohms)	Rating (W)	Characteristic (#)	Tolerance (%)	(FRL)(&)	(FRL)(&)	Manufacturer
RWR78#32R0%&	32.0	10	S, W, N, Z	B, D	S	P, R	DAL, SHA, TEP
RWR78#32R4%&	32.4	10	S, W, N, Z	B, D, F	S	P, R	DAL, SHA, TEP
RWR78#32R8%&	32.8	10	S, W, N, Z	B, D	S	P, R	DAL, SHA, TEP
RWR78#33R2%&	33.2	10	S, W, N, Z	B, D, F	S	P, R	DAL, SHA, TEP
RWR78#33R6%&	33.6	10	S, W, N, Z	B, D	S	P, R	DAL, SHA, TEP
RWR78#34R0%&	34.0	10	S, W, N, Z	B, D, F	S	P, R	DAL, SHA, TEP
RWR78#34R4%&	34.4	10	S, W, N, Z	B, D	S	P, R	DAL, SHA, TEP
	Resistance	Power	Terminal	Resistance	Level 1	Level 2	
Part Number	Value (Ohms)	Rating (W)	Characteristic (#)	Tolerance (%)	(FRL)(&)	(FRL)(&)	Manufacturer
RWR78#34R8%&	34.8	10	S, W, N, Z	B, D, F	S	P, R	DAL, SHA, TEP
RWR78#35R2%&	35.2	10	S, W, N, Z	B, D	S	P, R	DAL, SHA, TEP
RWR78#35R7%&	35.7	10	S, W, N, Z	B, D, F	S	P, R	DAL, SHA, TEP
RWR78#36R1%&	36.1	10	S, W, N, Z	B, D	S	P, R	DAL, SHA, TEP
RWR78#36R5%&	36.5	10	S, W, N, Z	B, D, F	S	P, R	DAL, SHA, TEP
RWR78#37R0%&	37.0	10	S, W, N, Z	B, D	S	P, R	DAL, SHA, TEP
RWR78#37R4%&	37.4	10	S, W, N, Z	B, D, F	S	P, R	DAL, SHA, TEP
	Resistance	Power	Terminal	Resistance	Level 1	Level 2	
Part Number	Value (Ohms)	Rating (W)	Characteristic (#)	Tolerance (%)	(FRL)(&)	(FRL)(&)	Manufacturer
RWR78#37R9%&	37.9	10	S, W, N, Z	B, D	S	P, R	DAL, SHA, TEP
RWR78#38R3%&	38.3	10	S, W, N, Z	B, D, F	S	P, R	DAL, SHA, TEP
RWR78#38R8%&	38.8	10	S, W, N, Z	B, D	S	P, R	DAL, SHA, TEP
RWR78#39R2%&	39.2	10	S, W, N, Z	B, D, F	S	P, R	DAL, SHA, TEP
RWR78#39R7%&	39.7	10	S, W, N, Z	B, D	S	P, R	DAL, SHA, TEP
RWR78#40R2%&	40.2	10	S, W, N, Z	B, D, F	S	P, R	DAL, SHA, TEP
RWR78#40R7%&	40.7	10	S, W, N, Z	B, D	S	P, R	DAL, SHA, TEP
	Resistance	Power	Terminal	Resistance	Level 1	Level 2	
Part Number	Value (Ohms)	Rating (W)	Characteristic (#)	Tolerance (%)	(FRL)(&)	(FRL)(&)	Manufacturer
RWR78#41R2%&	41.2	10	S, W, N, Z	B, D, F	S	P, R	DAL, SHA, TEP
RWR78#41R7%&	41.7	10	S, W, N, Z	B, D	S	P, R	DAL, SHA, TEP

RWR78#42R2%&	42.2	10	S, W, N, Z	B, D, F	S	P, R	DAL, SHA, TEP
RWR78#42R7%&	42.7	10	S, W, N, Z	B, D	S	P, R	DAL, SHA, TEP
RWR78#43R2%&	43.2	10	S, W, N, Z	B, D, F	S	P, R	DAL, SHA, TEP
RWR78#43R7%&	43.7	10	S, W, N, Z	B, D	S	P, R	DAL, SHA, TEP
RWR78#44R2%&	44.2	10	S, W, N, Z	B, D, F	S	P, R	DAL, SHA, TEP
	Resistance	Power	Terminal	Resistance	Level 1	Level 2	
Part Number	Value (Ohms)	Rating (W)	Characteristic (#)	Tolerance (%)	(FRL)(&)	(FRL)(&)	Manufacturer
RWR78#44R8%&	44.8	10	S, W, N, Z	B, D	S	P, R	DAL, SHA, TEP
RWR78#45R3%&	45.3	10	S, W, N, Z	B, D, F	S	P, R	DAL, SHA, TEP
RWR78#45R9%&	45.9	10	S, W, N, Z	B, D	S	P, R	DAL, SHA, TEP
RWR78#46R4%&	46.4	10	S, W, N, Z	B, D, F	S	P, R	DAL, SHA, TEP
RWR78#47R0%&	47.0	10	S, W, N, Z	B, D	S	P, R	DAL, SHA, TEP
RWR78#47R5%&	47.5	10	S, W, N, Z	B, D, F	S	P, R	DAL, SHA, TEP
RWR78#48R1%&	48.1	10	S, W, N, Z	B, D	S	P, R	DAL, SHA, TEP
	Resistance	Power	Terminal	Resistance	Level 1	Level 2	
Part Number	Value (Ohms)	Rating (W)	Characteristic (#)	Tolerance (%)	(FRL)(&)	(FRL)(&)	Manufacturer
RWR78#48R7%&	48.7	10	S, W, N, Z	B, D, F	S	P, R	DAL, SHA, TEP
RWR78#49R3%&	49.3	10	S, W, N, Z	B, D	S	P, R	DAL, SHA, TEP
RWR78#49R9%&	49.9	10	S, W, N, Z	B, D, F	S	P, R	DAL, SHA, TEP
RWR78#50R5%&	50.5	10	S, W, N, Z	B, D	S	P, R	DAL, SHA, TEP
RWR78#51R1%&	51.1	10	S, W, N, Z	B, D, F	S	P, R	DAL, SHA, TEP
RWR78#51R7%&	51.7	10	S, W, N, Z	B, D	S	P, R	DAL, SHA, TEP
RWR78#52R3%&	52.3	10	S, W, N, Z	B, D, F	S	P, R	DAL, SHA, TEP
	Resistance	Power	Terminal	Resistance	Level 1	Level 2	
Part Number	Value (Ohms)	Rating (W)	Characteristic (#)	Tolerance (%)	(FRL)(&)	(FRL)(&)	Manufacturer
RWR78#53R0%&	53.0	10	S, W, N, Z	B, D	S	P, R	DAL, SHA, TEP
RWR78#53R6%&	53.6	10	S, W, N, Z	B, D, F	S	P, R	DAL, SHA, TEP
RWR78#54R2%&	54.2	10	S, W, N, Z	B, D	S	P, R	DAL, SHA, TEP
RWR78#54R9%&	54.9	10	S, W, N, Z	B, D, F	S	P, R	DAL, SHA, TEP
RWR78#55R6%&	55.6	10	S, W, N, Z	B, D	S	P, R	DAL, SHA, TEP
RWR78#56R2%&	56.2	10	S, W, N, Z	B, D, F	S	P, R	DAL, SHA, TEP
RWR78#56R9%&	56.9	10	S, W, N, Z	B, D	S	P, R	DAL, SHA, TEP
	Resistance	Power	Terminal	Resistance	Level 1	Level 2	
Part Number	Value (Ohms)	Rating (W)	Characteristic (#)	Tolerance (%)	(FRL)(&)	(FRL)(&)	Manufacturer
RWR78#57R6%&	57.6	10	S, W, N, Z	B, D, F	S	P, R	DAL, SHA, TEP
RWR78#58R3%&	58.3	10	S, W, N, Z	B, D	S	P, R	DAL, SHA, TEP
RWR78#59R0%&	59.0	10	S, W, N, Z	B, D, F	S	P, R	DAL, SHA, TEP
RWR78#59R7%&	59.7	10	S, W, N, Z	B, D	S	P, R	DAL, SHA, TEP
RWR78#60R4%&	60.4	10	S, W, N, Z	B, D, F	S	P, R	DAL, SHA, TEP
RWR78#61R2%&	61.2	10	S, W, N, Z	B, D	S	P, R	DAL, SHA, TEP
RWR78#61R9%&	61.9	10	S, W, N, Z	B, D, F	S	P, R	DAL, SHA, TEP
	Resistance	Power	Terminal	Resistance	Level 1	Level 2	
Part Number	Value (Ohms)	Rating (W)	Characteristic (#)	Tolerance (%)	(FRL)(&)	(FRL)(&)	Manufacturer
RWR78#62R6%&	62.6	10	S, W, N, Z	B, D	S	P, R	DAL, SHA, TEP
RWR78#63R4%&	63.4	10	S, W, N, Z	B, D, F	S	P, R	DAL, SHA, TEP
RWR78#64R2%&	64.2	10	S, W, N, Z	B, D	S	P, R	DAL, SHA, TEP
RWR78#64R9%&	64.9	10	S, W, N, Z	B, D, F	S	P, R	DAL, SHA, TEP

RWR78#65R7%&	65.7	10	S, W, N, Z	B, D	S	P, R	DAL, SHA, TEP
RWR78#66R5%&	66.5	10	S, W, N, Z	B, D, F	S	P, R	DAL, SHA, TEP
	Resistance	Power	Terminal	Resistance	Level 1	Level 2	
Part Number	Value (Ohms)	Rating (W)	Characteristic (#)	Tolerance (%)	(FRL)(&)	(FRL)(&)	Manufacturer
RWR78#67R3%&	67.3	10	S, W, N, Z	B, D	S	P, R	DAL, SHA, TEP
RWR78#68R1%&	68.1	10	S, W, N, Z	B, D, F	S	P, R	DAL, SHA, TEP
RWR78#69R0%&	69.0	10	S, W, N, Z	B, D	S	P, R	DAL, SHA, TEP
RWR78#69R8%&	69.8	10	S, W, N, Z	B, D, F	S	P, R	DAL, SHA, TEP
RWR78#70R6%&	70.6	10	S, W, N, Z	B, D	S	P, R	DAL, SHA, TEP
RWR78#71R5%&	71.5	10	S, W, N, Z	B, D, F	S	P, R	DAL, SHA, TEP
RWR78#72R3%&	72.3	10	S, W, N, Z	B, D	S	P, R	DAL, SHA, TEP
	Resistance	Power	Terminal	Resistance	Level 1	Level 2	
Part Number	Value (Ohms)	Rating (W)	Characteristic (#)	Tolerance (%)	(FRL)(&)	(FRL)(&)	Manufacturer
RWR78#73R2%&	73.2	10	S, W, N, Z	B, D, F	S	P, R	DAL, SHA, TEP
RWR78#74R1%&	74.1	10	S, W, N, Z	B, D	S	P, R	DAL, SHA, TEP
RWR78#75R0%&	75.0	10	S, W, N, Z	B, D, F	S	P, R	DAL, SHA, TEP
RWR78#75R9%&	75.9	10	S, W, N, Z	B, D	S	P, R	DAL, SHA, TEP
RWR78#76R8%&.	76.8	10	S, W, N, Z	B, D, F	S	P, R	DAL, SHA, TEP
RWR78#77R7%&.	77.7	10	S, W, N, Z	B, D	S	P, R	DAL, SHA, TEP
RWR78#78R7%&	78.7	10	S, W, N, Z	B, D, F	S	P, R	DAL, SHA, TEP
	Resistance	Power	Terminal	Resistance	Level 1	Level 2	
Part Number	Value (Ohms)	Rating (W)	Characteristic (#)	Tolerance (%)	(FRL)(&)	(FRL)(&)	Manufacturer
RWR78#79R6%&	79.6	10	S, W, N, Z	B, D	S	P, R	DAL, SHA, TEP
RWR78#80R6%&	80.6	10	S, W, N, Z	B, D, F	S	P, R	DAL, SHA, TEP
RWR78#81R6%&	81.6	10	S, W, N, Z	B, D	S	P, R	DAL, SHA, TEP
RWR78#82R5%&	82.5	10	S, W, N, Z	B, D, F	S	P, R	DAL, SHA, TEP
RWR78#83R5%&	83.5	10	S, W, N, Z	B, D	S	P, R	DAL, SHA, TEP
RWR78#84R5%&	84.5	10	S, W, N, Z	B, D, F	S	P, R	DAL, SHA, TEP
RWR78#85R6%&	85.6	10	S, W, N, Z	B, D	S	P, R	DAL, SHA, TEP
	Resistance	Power	Terminal	Resistance	Level 1	Level 2	
Part Number	Value (Ohms)	Rating (W)	Characteristic (#)	Tolerance (%)	(FRL)(&)	(FRL)(&)	Manufacturer
RWR78#86R6%&	86.6	10	S, W, N, Z	B, D, F	S	P, R	DAL, SHA, TEP
RWR78#87R6%&	87.6	10	S, W, N, Z	B, D	S	P, R	DAL, SHA, TEP
RWR78#88R7%&	88.7	10	S, W, N, Z	B, D, F	S	P, R	DAL, SHA, TEP
RWR78#89R8%&	89.8	10	S, W, N, Z	B, D	S	P, R	DAL, SHA, TEP
RWR78#90R9%&	90.9	10	S, W, N, Z	B, D, F	S	P, R	DAL, SHA, TEP
RWR78#92R0%&	92.0	10	S, W, N, Z	B, D	S	P, R	DAL, SHA, TEP
RWR78#93R1%&	93.1	10	S, W, N, Z	B, D, F	S	P, R	DAL, SHA, TEP
	Resistance	Power	Terminal	Resistance	Level 1	Level 2	
Part Number	Value (Ohms)	Rating (W)	Characteristic (#)	Tolerance (%)	(FRL)(&)	(FRL)(&)	Manufacturer
RWR78#94R2%&	94.2	10	S, W, N, Z	B, D	S	P, R	DAL, SHA, TEP
RWR78#95R3%&	95.3	10	S, W, N, Z	B, D, F	S	P, R	DAL, SHA, TEP
RWR78#96R5%&	96.5	10	S, W, N, Z	B, D	S	P, R	DAL, SHA, TEP
RWR78#97R6%&	97.6	10	S, W, N, Z	B, D, F	S	P, R	DAL, SHA, TEP
RWR78#98R8%&	98.8	10	S, W, N, Z	B, D	S	P, R	DAL, SHA, TEP

	Resistance	Power	Terminal	Resistance	Level 1	Level 2	
Part Number	Value (Ohms)	Rating (W)	Characteristic (#)	Tolerance (%)	(FRL)(&)	(FRL)(&)	Manufacturer
RWR78#1000%&	100	10	S, W, N, Z	B, D, F	S	P, R	DAL, SHA, TEP
RWR78#1010%&	101	10	S, W, N, Z	B, D	S	P, R	DAL, SHA, TEP
RWR78#1020%&	102	10	S, W, N, Z	B, D, F	S	P, R	DAL, SHA, TEP
RWR78#1040%&	104	10	S, W, N, Z	B, D	S	P, R	DAL, SHA, TEP
RWR78#1050%&	105	10	S, W, N, Z	B, D, F	S	P, R	DAL, SHA, TEP
RWR78#1060%&	106	10	S, W, N, Z	B, D	S	P, R	DAL, SHA, TEP
RWR78#1070%&	107	10	S, W, N, Z	B, D, F	S	P, R	DAL, SHA, TEP
	Resistance	Power	Terminal	Resistance	Level 1	Level 2	
Part Number	Value (Ohms)	Rating (W)	Characteristic (#)	Tolerance (%)	(FRL)(&)	(FRL)(&)	Manufacturer
RWR78#1090%&	109	10	S, W, N, Z	B, D	S	P, R	DAL, SHA, TEP
RWR78#1100%&	110	10	S, W, N, Z	B, D, F	S	P, R	DAL, SHA, TEP
RWR78#1110%&	111	10	S, W, N, Z	B, D	S	P, R	DAL, SHA, TEP
RWR78#1130%&	113	10	S, W, N, Z	B, D, F	S	P, R	DAL, SHA, TEP
RWR78#1140%&	114	10	S, W, N, Z	B, D	S	P, R	DAL, SHA, TEP
RWR78#1150%&	115	10	S, W, N, Z	B, D, F	S	P, R	DAL, SHA, TEP
RWR78#1170%&	117	10	S, W, N, Z	B, D	S	P, R	DAL, SHA, TEP
	Resistance	Power	Terminal	Resistance	Level 1	Level 2	
Part Number	Value (Ohms)	Rating (W)	Characteristic (#)	Tolerance (%)	(FRL)(&)	(FRL)(&)	Manufacturer
RWR78#1180%&	118	10	S, W, N, Z	B, D, F	S	P, R	DAL, SHA, TEP
RWR78#1200%&	120	10	S, W, N, Z	B, D	S	P, R	DAL, SHA, TEP
RWR78#1210%&	121	10	S, W, N, Z	B, D, F	S	P, R	DAL, SHA, TEP
RWR78#1230%&	123	10	S, W, N, Z	B, D	S	P, R	DAL, SHA, TEP
RWR78#1240%&	124	10	S, W, N, Z	B, D, F	S	P, R	DAL, SHA, TEP
RWR78#1260%&	126	10	S, W, N, Z	B, D	S	P, R	DAL, SHA, TEP
RWR78#1270%&	127	10	S, W, N, Z	B, D, F	S	P, R	DAL, SHA, TEP
	Resistance	Power	Terminal	Resistance	Level 1	Level 2	
Part Number	Value (Ohms)	Rating (W)	Characteristic (#)	Tolerance (%)	(FRL)(&)	(FRL)(&)	Manufacturer
RWR78#1290%&	129	10	S, W, N, Z	B, D	S	P, R	DAL, SHA, TEP
RWR78#1300%&	130	10	S, W, N, Z	B, D, F	S	P, R	DAL, SHA, TEP
RWR78#1320%&	132	10	S, W, N, Z	B, D	S	P, R	DAL, SHA, TEP
RWR78#1330%&	133	10	S, W, N, Z	B, D, F	S	P, R	DAL, SHA, TEP
RWR78#1350%&	135	10	S, W, N, Z	B, D	S	P, R	DAL, SHA, TEP
RWR78#1370%&	137	10	S, W, N, Z	B, D, F	S	P, R	DAL, SHA, TEP
RWR78#1380%&	138	10	S, W, N, Z	B, D	S	P, R	DAL, SHA, TEP
	Resistance	Power	Terminal	Resistance	Level 1	Level 2	
Part Number	Value (Ohms)	Rating (W)	Characteristic (#)	Tolerance (%)	(FRL)(&)	(FRL)(&)	Manufacturer
RWR78#1400%&	140	10	S, W, N, Z	B, D, F	S	P, R	DAL, SHA, TEP
RWR78#1420%&	142	10	S, W, N, Z	B, D	S	P, R	DAL, SHA, TEP
RWR78#1430%&	143	10	S, W, N, Z	B, D, F	S	P, R	DAL, SHA, TEP
RWR78#1450%&	145	10	S, W, N, Z	B, D	S	P, R	DAL, SHA, TEP
RWR78#1470%&	147	10	S, W, N, Z	B, D, F	S	P, R	DAL, SHA, TEP
RWR78#1490%&	149	10	S, W, N, Z	B, D	S	P, R	DAL, SHA, TEP

RWR78#1500%&	150	10	S, W, N, Z	B, D, F	S	P, R	DAL, SHA, TEP
	Resistance	Power	Terminal	Resistance	Level 1	Level 2	
Part Number	Value (Ohms)	Rating (W)	Characteristic (#)	Tolerance (%)	(FRL)(&)	(FRL)(&)	Manufacturer
RWR78#1520%&	152	10	S, W, N, Z	B, D	S	P, R	DAL, SHA, TEP
RWR78#1540%&	154	10	S, W, N, Z	B, D, F	S	P, R	DAL, SHA, TEP
RWR78#1560%&	156	10	S, W, N, Z	B, D	S	P, R	DAL, SHA, TEP
RWR78#1580%&	158	10	S, W, N, Z	B, D, F	S	P, R	DAL, SHA, TEP
RWR78#1600%&	160	10	S, W, N, Z	B, D	S	P, R	DAL, SHA, TEP
RWR78#1620%&	162	10	S, W, N, Z	B, D, F	S	P, R	DAL, SHA, TEP
RWR78#1640%&	164	10	S, W, N, Z	B, D	S	P, R	DAL, SHA, TEP
	Resistance	Power	Terminal	Resistance	Level 1	Level 2	
Part Number	Value (Ohms)	Rating (W)	Characteristic (#)	Tolerance (%)	(FRL)(&)	(FRL)(&)	Manufacturer
RWR78#1650%&	165	10	S, W, N, Z	B, D, F	S	P, R	DAL, SHA, TEP
RWR78#1670%&	167	10	S, W, N, Z	B, D	S	P, R	DAL, SHA, TEP
RWR78#1690%&	169	10	S, W, N, Z	B, D, F	S	P, R	DAL, SHA, TEP
RWR78#1720%&	172	10	S, W, N, Z	B, D	S	P, R	DAL, SHA, TEP
RWR78#1740%&	174	10	S, W, N, Z	B, D, F	S	P, R	DAL, SHA, TEP
RWR78#1760%&	176	10	S, W, N, Z	B, D	S	P, R	DAL, SHA, TEP
	Resistance	Power	Terminal	Resistance	Level 1	Level 2	
Part Number	Value (Ohms)	Rating (W)	Characteristic (#)	Tolerance (%)	(FRL)(&)	(FRL)(&)	Manufacturer
RWR78#1780%&	178	10	S, W, N, Z	B, D, F	S	P, R	DAL, SHA, TEP
RWR78#1800%&	180	10	S, W, N, Z	B, D, F	S	P, R	DAL, SHA, TEP
RWR78#1820%&	182	10	S, W, N, Z	B, D, F	S	P, R	DAL, SHA, TEP
RWR78#1840%&	184	10	S, W, N, Z	B, D	S	P, R	DAL, SHA, TEP
RWR78#1870%&	187	10	S, W, N, Z	B, D, F	S	P, R	DAL, SHA, TEP
RWR78#1890%&	189	10	S, W, N, Z	B, D	S	P, R	DAL, SHA, TEP
RWR78#1910%&	191	10	S, W, N, Z	B, D, F	S	P, R	DAL, SHA, TEP
	Resistance	Power	Terminal	Resistance	Level 1	Level 2	
Part Number	Value (Ohms)	Rating (W)	Characteristic (#)	Tolerance (%)	(FRL)(&)	(FRL)(&)	Manufacturer
RWR78#1930%&	193	10	S, W, N, Z	B, D	S	P, R	DAL, SHA, TEP
RWR78#1960%&	196	10	S, W, N, Z	B, D, F	S	P, R	DAL, SHA, TEP
RWR78#1980%&	198	10	S, W, N, Z	B, D	S	P, R	DAL, SHA, TEP
RWR78#2000%&	200	10	S, W, N, Z	B, D, F	S	P, R	DAL, SHA, TEP
RWR78#2030%&	203	10	S, W, N, Z	B, D	S	P, R	DAL, SHA, TEP
RWR78#2050%&	205	10	S, W, N, Z	B, D, F	S	P, R	DAL, SHA, TEP
RWR78#2080%&	208	10	S, W, N, Z	B, D	S	P, R	DAL, SHA, TEP
	Resistance	Power	Terminal	Resistance	Level 1	Level 2	
Part Number	Value (Ohms)	Rating (W)	Characteristic (#)	Tolerance (%)	(FRL)(&)	(FRL)(&)	Manufacturer
RWR78#2100%&	210	10	S, W, N, Z	B, D, F	S	P, R	DAL, SHA, TEP
RWR78#2130%&	213	10	S, W, N, Z	B, D	S	P, R	DAL, SHA, TEP
RWR78#2150%&	215	10	S, W, N, Z	B, D, F	S	P, R	DAL, SHA, TEP
RWR78#2180%&	218	10	S, W, N, Z	B, D	S	P, R	DAL, SHA, TEP
RWR78#2210%&	221	10	S, W, N, Z	B, D, F	S	P, R	DAL, SHA, TEP
RWR78#2230%&	223	10	S, W, N, Z	B, D	S	P, R	DAL, SHA, TEP
RWR78#2260%&	226	10	S, W, N, Z	B, D, F	S	P, R	DAL, SHA, TEP
	Resistance	Power	Terminal	Resistance	Level 1	Level 2	
Part Number	Value (Ohms)	Rating (W)	Characteristic (#)	Tolerance (%)	(FRL)(&)	(FRL)(&)	Manufacturer

RWR78#2290%&	229	10	S, W, N, Z	B, D	S	P, R	DAL, SHA, TEP
RWR78#2320%&	232	10	S, W, N, Z	B, D, F	S	P, R	DAL, SHA, TEP
RWR78#2340%&	234	10	S, W, N, Z	B, D	S	P, R	DAL, SHA, TEP
RWR78#2370%&	237	10	S, W, N, Z	B, D, F	S	P, R	DAL, SHA, TEP
RWR78#2400%&	240	10	S, W, N, Z	B, D	S	P, R	DAL, SHA, TEP
RWR78#2430%&	243	10	S, W, N, Z	B, D, F	S	P, R	DAL, SHA, TEP
RWR78#2460%&	246	10	S, W, N, Z	B, D	S	P, R	DAL, SHA, TEP
	Resistance	Power	Terminal	Resistance	Level 1	Level 2	
Part Number	Value (Ohms)	Rating (W)	Characteristic (#)	Tolerance (%)	(FRL)(&)	(FRL)(&)	Manufacturer
RWR78#2490%&	249	10	S, W, N, Z	B, D, F	S	P, R	DAL, SHA, TEP
RWR78#2520%&	252	10	S, W, N, Z	B, D	S	P, R	DAL, SHA, TEP
RWR78#2550%&	255	10	S, W, N, Z	B, D, F	S	P, R	DAL, SHA, TEP
RWR78#2580%&	258	10	S, W, N, Z	B, D	S	P, R	DAL, SHA, TEP
RWR78#2610%&	261	10	S, W, N, Z	B, D, F	S	P, R	DAL, SHA, TEP
RWR78#2640%&	264	10	S, W, N, Z	B, D	S	P, R	DAL, SHA, TEP
RWR78#2670%&	267	10	S, W, N, Z	B, D, F	S	P, R	DAL, SHA, TEP
	Resistance	Power	Terminal	Resistance	Level 1	Level 2	
Part Number	Value (Ohms)	Rating (W)	Characteristic (#)	Tolerance (%)	(FRL)(&)	(FRL)(&)	Manufacturer
RWR78#2710%&	271	10	S, W, N, Z	B, D	S	P, R	DAL, SHA, TEP
RWR78#2740%&	274	10	S, W, N, Z	B, D, F	S	P, R	DAL, SHA, TEP
RWR78#2770%&	277	10	S, W, N, Z	B, D	S	P, R	DAL, SHA, TEP
RWR78#2800%&	280	10	S, W, N, Z	B, D, F	S	P, R	DAL, SHA, TEP
RWR78#2840%&	284	10	S, W, N, Z	B, D	S	P, R	DAL, SHA, TEP
RWR78#2870%&	287	10	S, W, N, Z	B, D, F	S	P, R	DAL, SHA, TEP
RWR78#2910%&	291	10	S, W, N, Z	B, D	S	P, R	DAL, SHA, TEP
	Resistance	Power	Terminal	Resistance	Level 1	Level 2	
Part Number	Value (Ohms)	Rating (W)	Characteristic (#)	Tolerance (%)	(FRL)(&)	(FRL)(&)	Manufacturer
RWR78#2940%&	294	10	S, W, N, Z	B, D, F	S	P, R	DAL, SHA, TEP
RWR78#2980%&	298	10	S, W, N, Z	B, D	S	P, R	DAL, SHA, TEP
RWR78#3010%&	301	10	S, W, N, Z	B, D, F	S	P, R	DAL, SHA, TEP
RWR78#3050%&	305	10	S, W, N, Z	B, D	S	P, R	DAL, SHA, TEP
RWR78#3090%&	309	10	S, W, N, Z	B, D, F	S	P, R	DAL, SHA, TEP
RWR78#3120%&	312	10	S, W, N, Z	B, D	S	P, R	DAL, SHA, TEP
RWR78#3160%&	316	10	S, W, N, Z	B, D, F	S	P, R	DAL, SHA, TEP
	Resistance	Power	Terminal	Resistance	Level 1	Level 2	
Part Number	Value (Ohms)	Rating (W)	Characteristic (#)	Tolerance (%)	(FRL)(&)	(FRL)(&)	Manufacturer
RWR78#3200%&	320	10	S, W, N, Z	B, D	S	P, R	DAL, SHA, TEP
RWR78#3240%&	324	10	S, W, N, Z	B, D, F	S	P, R	DAL, SHA, TEP
RWR78#3280%&	328	10	S, W, N, Z	B, D	S	P, R	DAL, SHA, TEP
RWR78#3320%&	332	10	S, W, N, Z	B, D, F	S	P, R	DAL, SHA, TEP
RWR78#3360%&	336	10	S, W, N, Z	B, D	S	P, R	DAL, SHA, TEP
RWR78#3400%&	340	10	S, W, N, Z	B, D, F	S	P, R	DAL, SHA, TEP
RWR78#3440%&	344	10	S, W, N, Z	B, D	S	P, R	DAL, SHA, TEP
	Resistance	Power	Terminal	Resistance	Level 1	Level 2	
Part Number	Value (Ohms)	Rating (W)	Characteristic (#)	Tolerance (%)	(FRL)(&)	(FRL)(&)	Manufacturer
RWR78#3480%&	348	10	S, W, N, Z	B, D, F	S	P, R	DAL, SHA, TEP
RWR78#3520%&	352	10	S, W, N, Z	B, D	S	P, R	DAL, SHA, TEP

RWR78#3570%&	357	10	S, W, N, Z	B, D, F	S	P, R	DAL, SHA, TEP
RWR78#3610%&	361	10	S, W, N, Z	B, D	S	P, R	DAL, SHA, TEP
RWR78#3650%&	365	10	S, W, N, Z	B, D, F	S	P, R	DAL, SHA, TEP
RWR78#3700%&	370	10	S, W, N, Z	B, D	S	P, R	DAL, SHA, TEP
RWR78#3740%&	374	10	S, W, N, Z	B, D, F	S	P, R	DAL, SHA, TEP
	Resistance	Power	Terminal	Resistance	Level 1	Level 2	
Part Number	Value (Ohms)	Rating (W)	Characteristic (#)	Tolerance (%)	(FRL)(&)	(FRL)(&)	Manufacturer
RWR78#3790%&	379	10	S, W, N, Z	B, D	S	P, R	DAL, SHA, TEP
RWR78#3830%&	383	10	S, W, N, Z	B, D, F	S	P, R	DAL, SHA, TEP
RWR78#3880%&	388	10	S, W, N, Z	B, D	S	P, R	DAL, SHA, TEP
RWR78#3920%&	392	10	S, W, N, Z	B, D, F	S	P, R	DAL, SHA, TEP
RWR78#3970%&	397	10	S, W, N, Z	B, D	S	P, R	DAL, SHA, TEP
RWR78#4020%&	402	10	S, W, N, Z	B, D, F	S	P, R	DAL, SHA, TEP
RWR78#4070%&	407	10	S, W, N, Z	B, D	S	P, R	DAL, SHA, TEP
	Resistance	Power	Terminal	Resistance	Level 1	Level 2	
Part Number	Value (Ohms)	Rating (W)	Characteristic (#)	Tolerance (%)	(FRL)(&)	(FRL)(&)	Manufacturer
RWR78#4120%&	412	10	S, W, N, Z	B, D, F	S	P, R	DAL, SHA, TEP
RWR78#4170%&	417	10	S, W, N, Z	B, D	S	P, R	DAL, SHA, TEP
RWR78#4220%&	422	10	S, W, N, Z	B, D, F	S	P, R	DAL, SHA, TEP
RWR78#4270%&	427	10	S, W, N, Z	B, D	S	P, R	DAL, SHA, TEP
RWR78#4320%&	432	10	S, W, N, Z	B, D, F	S	P, R	DAL, SHA, TEP
RWR78#4370%&	437	10	S, W, N, Z	B, D	S	P, R	DAL, SHA, TEP
RWR78#4420%&	442	10	S, W, N, Z	B, D, F	S	P, R	DAL, SHA, TEP
	Resistance	Power	Terminal	Resistance	Level 1	Level 2	
Part Number	Value (Ohms)	Rating (W)	Characteristic (#)	Tolerance (%)	(FRL)(&)	(FRL)(&)	Manufacturer
RWR78#4480%&	448	10	S, W, N, Z	B, D	S	P, R	DAL, SHA, TEP
RWR78#4530%&	453	10	S, W, N, Z	B, D, F	S	P, R	DAL, SHA, TEP
RWR78#4590%&	459	10	S, W, N, Z	B, D	S	P, R	DAL, SHA, TEP
RWR78#4640%&	464	10	S, W, N, Z	B, D, F	S	P, R	DAL, SHA, TEP
RWR78#4700%&	470	10	S, W, N, Z	B, D	S	P, R	DAL, SHA, TEP
RWR78#4750%&	475	10	S, W, N, Z	B, D, F	S	P, R	DAL, SHA, TEP
RWR78#4810%&	481	10	S, W, N, Z	B, D	S	P, R	DAL, SHA, TEP
	Resistance	Power	Terminal	Resistance	Level 1	Level 2	
Part Number	Value (Ohms)	Rating (W)	Characteristic (#)	Tolerance (%)	(FRL)(&)	(FRL)(&)	Manufacturer
RWR78#4870%&	487	10	S, W, N, Z	B, D, F	S	P, R	DAL, SHA, TEP
RWR78#4930%&	493	10	S, W, N, Z	B, D	S	P, R	DAL, SHA, TEP
RWR78#4990%&	499	10	S, W, N, Z	B, D, F	S	P, R	DAL, SHA, TEP
RWR78#5050%&	505	10	S, W, N, Z	B, D	S	P, R	DAL, SHA, TEP
RWR78#5110%&	511	10	S, W, N, Z	B, D, F	S	P, R	DAL, SHA, TEP
RWR78#5170%&	517	10	S, W, N, Z	B, D	S	P, R	DAL, SHA, TEP
RWR78#5230%&	523	10	S, W, N, Z	B, D, F	S	P, R	DAL, SHA, TEP
	Resistance	Power	Terminal	Resistance	Level 1	Level 2	
Part Number	Value (Ohms)	Rating (W)	Characteristic (#)	Tolerance (%)	(FRL)(&)	(FRL)(&)	Manufacturer
RWR78#5300%&	530	10	S, W, N, Z	B, D	S	P, R	DAL, SHA, TEP
RWR78#5360%&	536	10	S, W, N, Z	B, D, F	S	P, R	DAL, SHA, TEP
RWR78#5420%&	542	10	S, W, N, Z	B, D	S	P, R	DAL, SHA, TEP
RWR78#5490%&	549	10	S, W, N, Z	B, D, F	S	P, R	DAL, SHA, TEP

RWR78#5560%&	556	10	S, W, N, Z	B, D	S	P, R	DAL, SHA, TEP
RWR78#5620%&	562	10	S, W, N, Z	B, D, F	S	P, R	DAL, SHA, TEP
RWR78#5690%&	569	10	S, W, N, Z	B, D	S	P, R	DAL, SHA, TEP
	Resistance	Power	Terminal	Resistance	Level 1	Level 2	
Part Number	Value (Ohms)	Rating (W)	Characteristic (#)	Tolerance (%)	(FRL)(&)	(FRL)(&)	Manufacturer
RWR78#5760%&	576	10	S, W, N, Z	B, D, F	S	P, R	DAL, SHA, TEP
RWR78#5830%&	583	10	S, W, N, Z	B, D	S	P, R	DAL, SHA, TEP
RWR78#5900%&	590	10	S, W, N, Z	B, D, F	S	P, R	DAL, SHA, TEP
RWR78#5970%&	597	10	S, W, N, Z	B, D	S	P, R	DAL, SHA, TEP
RWR78#6040%&	604	10	S, W, N, Z	B, D, F	S	P, R	DAL, SHA, TEP
RWR78#6120%&	612	10	S, W, N, Z	B, D	S	P, R	DAL, SHA, TEP
RWR78#6190%&	619	10	S, W, N, Z	B, D, F	S	P, R	DAL, SHA, TEP
	Resistance	Power	Terminal	Resistance	Level 1	Level 2	
Part Number	Value (Ohms)	Rating (W)	Characteristic (#)	Tolerance (%)	(FRL)(&)	(FRL)(&)	Manufacturer
RWR78#6260%&	626	10	S, W, N, Z	B, D	S	P, R	DAL, SHA, TEP
RWR78#6340%&	634	10	S, W, N, Z	B, D, F	S	P, R	DAL, SHA, TEP
RWR78#6420%&	642	10	S, W, N, Z	B, D	S	P, R	DAL, SHA, TEP
RWR78#6490%&	649	10	S, W, N, Z	B, D, F	S	P, R	DAL, SHA, TEP
RWR78#6570%&	657	10	S, W, N, Z	B, D	S	P, R	DAL, SHA, TEP
RWR78#6650%&	665	10	S, W, N, Z	B, D, F	S	P, R	DAL, SHA, TEP
	Resistance	Power	Terminal	Resistance	Level 1	Level 2	
Part Number	Value (Ohms)	Rating (W)	Characteristic (#)	Tolerance (%)	(FRL)(&)	(FRL)(&)	Manufacturer
RWR78#6730%&	673	10	S, W, N, Z	B, D	S	P, R	DAL, SHA, TEP
RWR78#6810%&	681	10	S, W, N, Z	B, D, F	S	P, R	DAL, SHA, TEP
RWR78#6900%&	690	10	S, W, N, Z	B, D	S	P, R	DAL, SHA, TEP
RWR78#6980%&	698	10	S, W, N, Z	B, D, F	S	P, R	DAL, SHA, TEP
RWR78#7060%&	706	10	S, W, N, Z	B, D	S	P, R	DAL, SHA, TEP
RWR78#7150%&	715	10	S, W, N, Z	B, D, F	S	P, R	DAL, SHA, TEP
RWR78#7230%&	723	10	S, W, N, Z	B, D	S	P, R	DAL, SHA, TEP
	Resistance	Power	Terminal	Resistance	Level 1	Level 2	
Part Number	Value (Ohms)	Rating (W)	Characteristic (#)	Tolerance (%)	(FRL)(&)	(FRL)(&)	Manufacturer
RWR78#7320%&	732	10	S, W, N, Z	B, D, F	S	P, R	DAL, SHA, TEP
RWR78#7410%&	741	10	S, W, N, Z	B, D	S	P, R	DAL, SHA, TEP
RWR78#7500%&	750	10	S, W, N, Z	B, D, F	S	P, R	DAL, SHA, TEP
RWR78#7590%&	759	10	S, W, N, Z	B, D	S	P, R	DAL, SHA, TEP
RWR78#7680%&	768	10	S, W, N, Z	B, D, F	S	P, R	DAL, SHA, TEP
RWR78#7770%&	777	10	S, W, N, Z	B, D	S	P, R	DAL, SHA, TEP
RWR78#7870%&	787	10	S, W, N, Z	B, D, F	S	P, R	DAL, SHA, TEP
	Resistance	Power	Terminal	Resistance	Level 1	Level 2	
Part Number	Value (Ohms)	Rating (W)	Characteristic (#)	Tolerance (%)	(FRL)(&)	(FRL)(&)	Manufacturer
RWR78#7960%&	796	10	S, W, N, Z	B, D	S	P, R	DAL, SHA, TEP
RWR78#8060%&	806	10	S, W, N, Z	B, D, F	S	P, R	DAL, SHA, TEP
RWR78#8160%&	816	10	S, W, N, Z	B, D	S	P, R	DAL, SHA, TEP
RWR78#8250%&	825	10	S, W, N, Z	B, D, F	S	P, R	DAL, SHA, TEP
RWR78#8350%&	835	10	S, W, N, Z	B, D	S	P, R	DAL, SHA, TEP
RWR78#8450%&	845	10	S, W, N, Z	B, D, F	S	P, R	DAL, SHA, TEP
RWR78#8560%&	856	10	S, W, N, Z	B, D	S	P, R	DAL, SHA, TEP

	Resistance	Power	Terminal	Resistance	Level 1	Level 2	
Part Number	Value (Ohms)	Rating (W)	Characteristic (#)	Tolerance (%)	(FRL)(&)	(FRL)(&)	Manufacturer
RWR78#8660%&	866	10	S, W, N, Z	B, D, F	S	P, R	DAL, SHA, TEP
RWR78#8760%&	876	10	S, W, N, Z	B, D	S	P, R	DAL, SHA, TEP
RWR78#8870%&	887	10	S, W, N, Z	B, D, F	S	P, R	DAL, SHA, TEP
RWR78#8980%&	898	10	S, W, N, Z	B, D	S	P, R	DAL, SHA, TEP
RWR78#9090%&	909	10	S, W, N, Z	B, D, F	S	P, R	DAL, SHA, TEP
RWR78#9200%&	920	10	S, W, N, Z	B, D	S	P, R	DAL, SHA, TEP
RWR78#9310%&	931	10	S, W, N, Z	B, D, F	S	P, R	DAL, SHA, TEP
	Resistance	Power	Terminal	Resistance	Level 1	Level 2	
Part Number	Value (Ohms)	Rating (W)	Characteristic (#)	Tolerance (%)	(FRL)(&)	(FRL)(&)	Manufacturer
RWR78#9420%&	942	10	S, W, N, Z	B, D	S	P, R	DAL, SHA, TEP
RWR78#9530%&	953	10	S, W, N, Z	B, D, F	S	P, R	DAL, SHA, TEP
RWR78#9650%&	965	10	S, W, N, Z	B, D	S	P, R	DAL, SHA, TEP
RWR78#9760%&	976	10	S, W, N, Z	B, D, F	S	P, R	DAL, SHA, TEP
RWR78#9880%&	988	10	S, W, N, Z	B, D	S	P, R	DAL, SHA, TEP

RWR78 Wirewound Resistors: 1000 Ohms through 9880 Ohms

	Resistance	Power	Terminal	Resistance	Level 1	Level 2	
Part Number	Value (Ohms)	Rating (W)	Characteristic (#)	Tolerance (%)	(FRL)(&)	(FRL)(&)	Manufacturer
RWR78#1001%&	1000	10	S, W, N, Z	B, D, F	S	P, R	DAL, SHA, TEP
RWR78#1011%&	1010	10	S, W, N, Z	B, D	S	P, R	DAL, SHA, TEP
RWR78#1021%&	1020	10	S, W, N, Z	B, D, F	S	P, R	DAL, SHA, TEP
RWR78#1041%&	1040	10	S, W, N, Z	B, D	S	P, R	DAL, SHA, TEP
RWR78#1051%&	1050	10	S, W, N, Z	B, D, F	S	P, R	DAL, SHA, TEP
RWR78#1061%&	1060	10	S, W, N, Z	B, D	S	P, R	DAL, SHA, TEP
RWR78#1071%&	1070	10	S, W, N, Z	B, D, F	S	P, R	DAL, SHA, TEP
	Resistance	Power	Terminal	Resistance	Level 1	Level 2	
Part Number	Value (Ohms)	Rating (W)	Characteristic (#)	Tolerance (%)	(FRL)(&)	(FRL)(&)	Manufacturer
RWR78#1091%&	1090	10	S, W, N, Z	B, D	S	P, R	DAL, SHA, TEP
RWR78#1101%&	1100	10	S, W, N, Z	B, D, F	S	P, R	DAL, SHA, TEP
RWR78#1111%&	1110	10	S, W, N, Z	B, D	S	P, R	DAL, SHA, TEP
RWR78#1131%&	1130	10	S, W, N, Z	B, D, F	S	P, R	DAL, SHA, TEP
RWR78#1141%&	1140	10	S, W, N, Z	B, D	S	P, R	DAL, SHA, TEP
RWR78#1151%&	1150	10	S, W, N, Z	B, D, F	S	P, R	DAL, SHA, TEP
RWR78#1171%&	1170	10	S, W, N, Z	B, D	S	P, R	DAL, SHA, TEP
	Resistance	Power	Terminal	Resistance	Level 1	Level 2	
Part Number	Value (Ohms)	Rating (W)	Characteristic (#)	Tolerance (%)	(FRL)(&)	(FRL)(&)	Manufacturer
RWR78#1181%&	1180	10	S, W, N, Z	B, D, F	S	P, R	DAL, SHA, TEP
RWR78#1201%&	1200	10	S, W, N, Z	B, D	S	P, R	DAL, SHA, TEP
RWR78#1211%&	1210	10	S, W, N, Z	B, D, F	S	P, R	DAL, SHA, TEP
RWR78#1231%&	1230	10	S, W, N, Z	B, D	S	P, R	DAL, SHA, TEP
RWR78#1241%&	1240	10	S, W, N, Z	B, D, F	S	P, R	DAL, SHA, TEP
RWR78#1261%&	1260	10	S, W, N, Z	B, D	S	P, R	DAL, SHA, TEP

RWR78#1271%&	1270	10	S, W, N, Z	B, D, F	S	P, R	DAL, SHA, TEP
	Resistance	Power	Terminal	Resistance	Level 1	Level 2	
Part Number	Value (Ohms)	Rating (W)	Characteristic (#)	Tolerance (%)	(FRL)(&)	(FRL)(&)	Manufacturer
RWR78#1291%&	1290	10	S, W, N, Z	B, D	S	P, R	DAL, SHA, TEP
RWR78#1301%&	1300	10	S, W, N, Z	B, D, F	S	P, R	DAL, SHA, TEP
RWR78#1321%&	1320	10	S, W, N, Z	B, D	S	P, R	DAL, SHA, TEP
RWR78#1331%&	1330	10	S, W, N, Z	B, D, F	S	P, R	DAL, SHA, TEP
RWR78#1351%&	1350	10	S, W, N, Z	B, D	S	P, R	DAL, SHA, TEP
RWR78#1371%&	1370	10	S, W, N, Z	B, D, F	S	P, R	DAL, SHA, TEP
RWR78#1381%&	1380	10	S, W, N, Z	B, D	S	P, R	DAL, SHA, TEP
	Resistance	Power	Terminal	Resistance	Level 1	Level 2	
Part Number	Value (Ohms)	Rating (W)	Characteristic (#)	Tolerance (%)	(FRL)(&)	(FRL)(&)	Manufacturer
RWR78#1401%&	1400	10	S, W, N, Z	B, D, F	S	P, R	DAL, SHA, TEP
RWR78#1421%&	1420	10	S, W, N, Z	B, D	S	P, R	DAL, SHA, TEP
RWR78#1431%&	1430	10	S, W, N, Z	B, D, F	S	P, R	DAL, SHA, TEP
RWR78#1451%&	1450	10	S, W, N, Z	B, D	S	P, R	DAL, SHA, TEP
RWR78#1471%&	1470	10	S, W, N, Z	B, D, F	S	P, R	DAL, SHA, TEP
RWR78#1491%&	1490	10	S, W, N, Z	B, D	S	P, R	DAL, SHA, TEP
RWR78#1501%&	1500	10	S, W, N, Z	B, D, F	S	P, R	DAL, SHA, TEP
	Resistance	Power	Terminal	Resistance	Level 1	Level 2	
Part Number	Value (Ohms)	Rating (W)	Characteristic (#)	Tolerance (%)	(FRL)(&)	(FRL)(&)	Manufacturer
RWR78#1521%&	1520	10	S, W, N, Z	B, D	S	P, R	DAL, SHA, TEP
RWR78#1541%&	1540	10	S, W, N, Z	B, D, F	S	P, R	DAL, SHA, TEP
RWR78#1561%&	1560	10	S, W, N, Z	B, D	S	P, R	DAL, SHA, TEP
RWR78#1581%&	1580	10	S, W, N, Z	B, D, F	S	P, R	DAL, SHA, TEP
RWR78#1601%&	1600	10	S, W, N, Z	B, D	S	P, R	DAL, SHA, TEP
RWR78#1621%&	1620	10	S, W, N, Z	B, D, F	S	P, R	DAL, SHA, TEP
RWR78#1641%&	1640	10	S, W, N, Z	B, D	S	P, R	DAL, SHA, TEP
	Resistance	Power	Terminal	Resistance	Level 1	Level 2	
Part Number	Value (Ohms)	Rating (W)	Characteristic (#)	Tolerance (%)	(FRL)(&)	(FRL)(&)	Manufacturer
RWR78#1651%&	1650	10	S, W, N, Z	B, D, F	S	P, R	DAL, SHA, TEP
RWR78#1671%&	1670	10	S, W, N, Z	B, D	S	P, R	DAL, SHA, TEP
RWR78#1691%&	1690	10	S, W, N, Z	B, D, F	S	P, R	DAL, SHA, TEP
RWR78#1721%&	1720	10	S, W, N, Z	B, D	S	P, R	DAL, SHA, TEP
RWR78#1741%&	1740	10	S, W, N, Z	B, D, F	S	P, R	DAL, SHA, TEP
RWR78#1761%&	1760	10	S, W, N, Z	B, D	S	P, R	DAL, SHA, TEP
	Resistance	Power	Terminal	Resistance	Level 1	Level 2	
Part Number	Value (Ohms)	Rating (W)	Characteristic (#)	Tolerance (%)	(FRL)(&)	(FRL)(&)	Manufacturer
RWR78#1781%&	1780	10	S, W, N, Z	B, D, F	S	P, R	DAL, SHA, TEP
RWR78#1801%&	1800	10	S, W, N, Z	B, D, F	S	P, R	DAL, SHA, TEP
RWR78#1821%&	1820	10	S, W, N, Z	B, D, F	S	P, R	DAL, SHA, TEP
RWR78#1841%&	1840	10	S, W, N, Z	B, D	S	P, R	DAL, SHA, TEP
RWR78#1871%&	1870	10	S, W, N, Z	B, D, F	S	P, R	DAL, SHA, TEP
RWR78#1891%&	1890	10	S, W, N, Z	B, D	S	P, R	DAL, SHA, TEP
RWR78#1911%&	1910	10	S, W, N, Z	B, D, F	S	P, R	DAL, SHA, TEP
	Resistance	Power	Terminal	Resistance	Level 1	Level 2	
Part Number	Value (Ohms)	Rating (W)	Characteristic (#)	Tolerance (%)	(FRL)(&)	(FRL)(&)	Manufacturer

RWR78#1931%&	1930	10	S, W, N, Z	B, D	S	P, R	DAL, SHA, TEP
RWR78#1961%&	1960	10	S, W, N, Z	B, D, F	S	P, R	DAL, SHA, TEP
RWR78#1981%&	1980	10	S, W, N, Z	B, D	S	P, R	DAL, SHA, TEP
RWR78#2001%&	2000	10	S, W, N, Z	B, D, F	S	P, R	DAL, SHA, TEP
RWR78#2031%&	2030	10	S, W, N, Z	B, D	S	P, R	DAL, SHA, TEP
RWR78#2051%&	2050	10	S, W, N, Z	B, D, F	S	P, R	DAL, SHA, TEP
RWR78#2081%&	2080	10	S, W, N, Z	B, D	S	P, R	DAL, SHA, TEP
	Resistance	Power	Terminal	Resistance	Level 1	Level 2	
Part Number	Value (Ohms)	Rating (W)	Characteristic (#)	Tolerance (%)	(FRL)(&)	(FRL)(&)	Manufacturer
RWR78#2101%&	2100	10	S, W, N, Z	B, D, F	S	P, R	DAL, SHA, TEP
RWR78#2131%&	2130	10	S, W, N, Z	B, D	S	P, R	DAL, SHA, TEP
RWR78#2151%&	2150	10	S, W, N, Z	B, D, F	S	P, R	DAL, SHA, TEP
RWR78#2181%&	2180	10	S, W, N, Z	B, D	S	P, R	DAL, SHA, TEP
RWR78#2211%&	2210	10	S, W, N, Z	B, D, F	S	P, R	DAL, SHA, TEP
RWR78#2231%&	2230	10	S, W, N, Z	B, D	S	P, R	DAL, SHA, TEP
RWR78#2261%&	2260	10	S, W, N, Z	B, D, F	S	P, R	DAL, SHA, TEP
	Resistance	Power	Terminal	Resistance	Level 1	Level 2	
Part Number	Value (Ohms)	Rating (W)	Characteristic (#)	Tolerance (%)	(FRL)(&)	(FRL)(&)	Manufacturer
RWR78#2291%&	2290	10	S, W, N, Z	B, D	S	P, R	DAL, SHA, TEP
RWR78#2321%&	2320	10	S, W, N, Z	B, D, F	S	P, R	DAL, SHA, TEP
RWR78#2341%&	2340	10	S, W, N, Z	B, D	S	P, R	DAL, SHA, TEP
RWR78#2371%&	2370	10	S, W, N, Z	B, D, F	S	P, R	DAL, SHA, TEP
RWR78#2401%&	2400	10	S, W, N, Z	B, D	S	P, R	DAL, SHA, TEP
RWR78#2431%&	2430	10	S, W, N, Z	B, D, F	S	P, R	DAL, SHA, TEP
RWR78#2461%&	2460	10	S, W, N, Z	B, D	S	P, R	DAL, SHA, TEP
	Resistance	Power	Terminal	Resistance	Level 1	Level 2	
Part Number	Value (Ohms)	Rating (W)	Characteristic (#)	Tolerance (%)	(FRL)(&)	(FRL)(&)	Manufacturer
RWR78#2491%&	2490	10	S, W, N, Z	B, D, F	S	P, R	DAL, SHA, TEP
RWR78#2521%&	2520	10	S, W, N, Z	B, D	S	P, R	DAL, SHA, TEP
RWR78#2551%&	2550	10	S, W, N, Z	B, D, F	S	P, R	DAL, SHA, TEP
RWR78#2581%&	2580	10	S, W, N, Z	B, D	S	P, R	DAL, SHA, TEP
RWR78#2611%&	2610	10	S, W, N, Z	B, D, F	S	P, R	DAL, SHA, TEP
RWR78#2641%&	2640	10	S, W, N, Z	B, D	S	P, R	DAL, SHA, TEP
RWR78#2671%&	2670	10	S, W, N, Z	B, D, F	S	P, R	DAL, SHA, TEP
	Resistance	Power	Terminal	Resistance	Level 1	Level 2	
Part Number	Value (Ohms)	Rating (W)	Characteristic (#)	Tolerance (%)	(FRL)(&)	(FRL)(&)	Manufacturer
RWR78#2711%&	2710	10	S, W, N, Z	B, D	S	P, R	DAL, SHA, TEP
RWR78#2741%&	2740	10	S, W, N, Z	B, D, F	S	P, R	DAL, SHA, TEP
RWR78#2771%&	2770	10	S, W, N, Z	B, D	S	P, R	DAL, SHA, TEP
RWR78#2801%&	2800	10	S, W, N, Z	B, D, F	S	P, R	DAL, SHA, TEP
RWR78#2841%&	2840	10	S, W, N, Z	B, D	S	P, R	DAL, SHA, TEP
RWR78#2871%&	2870	10	S, W, N, Z	B, D, F	S	P, R	DAL, SHA, TEP
RWR78#2911%&	2910	10	S, W, N, Z	B, D	S	P, R	DAL, SHA, TEP
	Resistance	Power	Terminal	Resistance	Level 1	Level 2	
Part Number	Value (Ohms)	Rating (W)	Characteristic (#)	Tolerance (%)	(FRL)(&)	(FRL)(&)	Manufacturer
RWR78#2941%&	2940	10	S, W, N, Z	B, D, F	S	P, R	DAL, SHA, TEP
RWR78#2981%&	2980	10	S, W, N, Z	B, D	S	P, R	DAL, SHA, TEP

RWR78#3011%&	3010	10	S, W, N, Z	B, D, F	S	P, R	DAL, SHA, TEP
RWR78#3051%&	3050	10	S, W, N, Z	B, D	S	P, R	DAL, SHA, TEP
RWR78#3091%&	3090	10	S, W, N, Z	B, D, F	S	P, R	DAL, SHA, TEP
RWR78#3121%&	3120	10	S, W, N, Z	B, D	S	P, R	DAL, SHA, TEP
RWR78#3161%&	3160	10	S, W, N, Z	B, D, F	S	P, R	DAL, SHA, TEP
	Resistance	Power	Terminal	Resistance	Level 1	Level 2	
Part Number	Value (Ohms)	Rating (W)	Characteristic (#)	Tolerance (%)	(FRL)(&)	(FRL)(&)	Manufacturer
RWR78#3201%&	3200	10	S, W, N, Z	B, D	S	P, R	DAL, SHA, TEP
RWR78#3241%&	3240	10	S, W, N, Z	B, D, F	S	P, R	DAL, SHA, TEP
RWR78#3281%&	3280	10	S, W, N, Z	B, D	S	P, R	DAL, SHA, TEP
RWR78#3321%&	3320	10	S, W, N, Z	B, D, F	S	P, R	DAL, SHA, TEP
RWR78#3361%&	3360	10	S, W, N, Z	B, D	S	P, R	DAL, SHA, TEP
RWR78#3401%&	3400	10	S, W, N, Z	B, D, F	S	P, R	DAL, SHA, TEP
RWR78#3441%&	3440	10	S, W, N, Z	B, D	S	P, R	DAL, SHA, TEP
	Resistance	Power	Terminal	Resistance	Level 1	Level 2	
Part Number	Value (Ohms)	Rating (W)	Characteristic (#)	Tolerance (%)	(FRL)(&)	(FRL)(&)	Manufacturer
RWR78#3481%&	3480	10	S, W, N, Z	B, D, F	S	P, R	DAL, SHA, TEP
RWR78#3521%&	3520	10	S, W, N, Z	B, D	S	P, R	DAL, SHA, TEP
RWR78#3571%&	3570	10	S, W, N, Z	B, D, F	S	P, R	DAL, SHA, TEP
RWR78#3611%&	3610	10	S, W, N, Z	B, D	S	P, R	DAL, SHA, TEP
RWR78#3651%&	3650	10	S, W, N, Z	B, D, F	S	P, R	DAL, SHA, TEP
RWR78#3701%&	3700	10	S, W, N, Z	B, D	S	P, R	DAL, SHA, TEP
RWR78#3741%&	3740	10	S, W, N, Z	B, D, F	S	P, R	DAL, SHA, TEP
	Resistance	Power	Terminal	Resistance	Level 1	Level 2	
Part Number	Value (Ohms)	Rating (W)	Characteristic (#)	Tolerance (%)	(FRL)(&)	(FRL)(&)	Manufacturer
RWR78#3791%&	3790	10	S, W, N, Z	B, D	S	P, R	DAL, SHA, TEP
RWR78#3831%&	3830	10	S, W, N, Z	B, D, F	S	P, R	DAL, SHA, TEP
RWR78#3881%&	3880	10	S, W, N, Z	B, D	S	P, R	DAL, SHA, TEP
RWR78#3921%&	3920	10	S, W, N, Z	B, D, F	S	P, R	DAL, SHA, TEP
RWR78#3971%&	3970	10	S, W, N, Z	B, D	S	P, R	DAL, SHA, TEP
RWR78#4021%&	4020	10	S, W, N, Z	B, D, F	S	P, R	DAL, SHA, TEP
RWR78#4071%&	4070	10	S, W, N, Z	B, D	S	P, R	DAL, SHA, TEP
	Resistance	Power	Terminal	Resistance	Level 1	Level 2	
Part Number	Value (Ohms)	Rating (W)	Characteristic (#)	Tolerance (%)	(FRL)(&)	(FRL)(&)	Manufacturer
RWR78#4121%&	4120	10	S, W, N, Z	B, D, F	S	P, R	DAL, SHA, TEP
RWR78#4171%&	4170	10	S, W, N, Z	B, D	S	P, R	DAL, SHA, TEP
RWR78#4221%&	4220	10	S, W, N, Z	B, D, F	S	P, R	DAL, SHA, TEP
RWR78#4271%&	4270	10	S, W, N, Z	B, D	S	P, R	DAL, SHA, TEP
RWR78#4321%&	4320	10	S, W, N, Z	B, D, F	S	P, R	DAL, SHA, TEP
RWR78#4371%&	4370	10	S, W, N, Z	B, D	S	P, R	DAL, SHA, TEP
RWR78#4421%&	4420	10	S, W, N, Z	B, D, F	S	P, R	DAL, SHA, TEP
	Resistance	Power	Terminal	Resistance	Level 1	Level 2	
Part Number	Value (Ohms)	Rating (W)	Characteristic (#)	Tolerance (%)	(FRL)(&)	(FRL)(&)	Manufacturer
RWR78#4481%&	4480	10	S, W, N, Z	B, D	S	P, R	DAL, SHA, TEP
RWR78#4531%&	4530	10	S, W, N, Z	B, D, F	S	P, R	DAL, SHA, TEP
RWR78#4591%&	4590	10	S, W, N, Z	B, D	S	P, R	DAL, SHA, TEP
RWR78#4641%&	4640	10	S, W, N, Z	B, D, F	S	P, R	DAL, SHA, TEP

RWR78#4701%&	4700	10	S, W, N, Z	B, D	S	P, R	DAL, SHA, TEP
RWR78#4751%&	4750	10	S, W, N, Z	B, D, F	S	P, R	DAL, SHA, TEP
RWR78#4811%&	4810	10	S, W, N, Z	B, D	S	P, R	DAL, SHA, TEP
	Resistance	Power	Terminal	Resistance	Level 1	Level 2	
Part Number	Value (Ohms)	Rating (W)	Characteristic (#)	Tolerance (%)	(FRL)(&)	(FRL)(&)	Manufacturer
RWR78#4871%&	4870	10	S, W, N, Z	B, D, F	S	P, R	DAL, SHA, TEP
RWR78#4931%&	4930	10	S, W, N, Z	B, D	S	P, R	DAL, SHA, TEP
RWR78#4991%&	4990	10	S, W, N, Z	B, D, F	S	P, R	DAL, SHA, TEP
RWR78#5051%&	5050	10	S, W, N, Z	B, D	S	P, R	DAL, SHA, TEP
RWR78#5111%&	5110	10	S, W, N, Z	B, D, F	S	P, R	DAL, SHA, TEP
RWR78#5171%&	5170	10	S, W, N, Z	B, D	S	P, R	DAL, SHA, TEP
RWR78#5231%&	5230	10	S, W, N, Z	B, D, F	S	P, R	DAL, SHA, TEP
	Resistance	Power	Terminal	Resistance	Level 1	Level 2	
Part Number	Value (Ohms)	Rating (W)	Characteristic (#)	Tolerance (%)	(FRL)(&)	(FRL)(&)	Manufacturer
RWR78#5301%&	5300	10	S, W, N, Z	B, D	S	P, R	DAL, SHA, TEP
RWR78#5361%&	5360	10	S, W, N, Z	B, D, F	S	P, R	DAL, SHA, TEP
RWR78#5421%&	5420	10	S, W, N, Z	B, D	S	P, R	DAL, SHA, TEP
RWR78#5491%&	5490	10	S, W, N, Z	B, D, F	S	P, R	DAL, SHA, TEP
RWR78#5561%&	5560	10	S, W, N, Z	B, D	S	P, R	DAL, SHA, TEP
RWR78#5621%&	5620	10	S, W, N, Z	B, D, F	S	P, R	DAL, SHA, TEP
RWR78#5691%&	5690	10	S, W, N, Z	B, D	S	P, R	DAL, SHA, TEP
	Resistance	Power	Terminal	Resistance	Level 1	Level 2	
Part Number	Value (Ohms)	Rating (W)	Characteristic (#)	Tolerance (%)	(FRL)(&)	(FRL)(&)	Manufacturer
RWR78#5761%&	5760	10	S, W, N, Z	B, D, F	S	P, R	DAL, SHA, TEP
RWR78#5831%&	5830	10	S, W, N, Z	B, D	S	P, R	DAL, SHA, TEP
RWR78#5901%&	5900	10	S, W, N, Z	B, D, F	S	P, R	DAL, SHA, TEP
RWR78#5971%&	5970	10	S, W, N, Z	B, D	S	P, R	DAL, SHA, TEP
RWR78#6041%&	6040	10	S, W, N, Z	B, D, F	S	P, R	DAL, SHA, TEP
RWR78#6121%&	6120	10	S, W, N, Z	B, D	S	P, R	DAL, SHA, TEP
RWR78#6191%&	6190	10	S, W, N, Z	B, D, F	S	P, R	DAL, SHA, TEP
	Resistance	Power	Terminal	Resistance	Level 1	Level 2	
Part Number	Value (Ohms)	Rating (W)	Characteristic (#)	Tolerance (%)	(FRL)(&)	(FRL)(&)	Manufacturer
RWR78#6261%&	6260	10	S, W, N, Z	B, D	S	P, R	DAL, SHA, TEP
RWR78#6341%&	6340	10	S, W, N, Z	B, D, F	S	P, R	DAL, SHA, TEP
RWR78#6421%&	6420	10	S, W, N, Z	B, D	S	P, R	DAL, SHA, TEP
RWR78#6491%&	6490	10	S, W, N, Z	B, D, F	S	P, R	DAL, SHA, TEP
RWR78#6571%&	6570	10	S, W, N, Z	B, D	S	P, R	DAL, SHA, TEP
RWR78#6651%&	6650	10	S, W, N, Z	B, D, F	S	P, R	DAL, SHA, TEP
	Resistance	Power	Terminal	Resistance	Level 1	Level 2	
Part Number	Value (Ohms)	Rating (W)	Characteristic (#)	Tolerance (%)	(FRL)(&)	(FRL)(&)	Manufacturer
RWR78#6731%&	6730	10	S, W, N, Z	B, D	S	P, R	DAL, SHA, TEP
RWR78#6811%&	6810	10	S, W, N, Z	B, D, F	S	P, R	DAL, SHA, TEP
RWR78#6901%&	6900	10	S, W, N, Z	B, D	S	P, R	DAL, SHA, TEP
RWR78#6981%&	6980	10	S, W, N, Z	B, D, F	S	P, R	DAL, SHA, TEP
RWR78#7061%&	7060	10	S, W, N, Z	B, D	S	P, R	DAL, SHA, TEP
RWR78#7151%&	7150	10	S, W, N, Z	B, D, F	S	P, R	DAL, SHA, TEP
RWR78#7231%&	7230	10	S, W, N, Z	B, D	S	P, R	DAL, SHA, TEP

	Resistance	Power	Terminal	Resistance	Level 1	Level 2	
Part Number	Value (Ohms)	Rating (W)	Characteristic (#)	Tolerance (%)	(FRL)(&)	(FRL)(&)	Manufacturer
RWR78#7321%&	7320	10	S, W, N, Z	B, D, F	S	P, R	DAL, SHA, TEP
RWR78#7411%&	7410	10	S, W, N, Z	B, D	S	P, R	DAL, SHA, TEP
RWR78#7501%&	7500	10	S, W, N, Z	B, D, F	S	P, R	DAL, SHA, TEP
RWR78#7591%&	7590	10	S, W, N, Z	B, D	S	P, R	DAL, SHA, TEP
RWR78#7681%&	7680	10	S, W, N, Z	B, D, F	S	P, R	DAL, SHA, TEP
RWR78#7771%&	7770	10	S, W, N, Z	B, D	S	P, R	DAL, SHA, TEP
RWR78#7871%&	7870	10	S, W, N, Z	B, D, F	S	P, R	DAL, SHA, TEP
	Resistance	Power	Terminal	Resistance	Level 1	Level 2	
Part Number	Value (Ohms)	Rating (W)	Characteristic (#)	Tolerance (%)	(FRL)(&)	(FRL)(&)	Manufacturer
RWR78#7961%&	7960	10	S, W, N, Z	B, D	S	P, R	DAL, SHA, TEP
RWR78#8061%&	8060	10	S, W, N, Z	B, D, F	S	P, R	DAL, SHA, TEP
RWR78#8161%&	8160	10	S, W, N, Z	B, D	S	P, R	DAL, SHA, TEP
RWR78#8251%&	8250	10	S, W, N, Z	B, D, F	S	P, R	DAL, SHA, TEP
RWR78#8351%&	8350	10	S, W, N, Z	B, D	S	P, R	DAL, SHA, TEP
RWR78#8451%&	8450	10	S, W, N, Z	B, D, F	S	P, R	DAL, SHA, TEP
RWR78#8561%&	8560	10	S, W, N, Z	B, D	S	P, R	DAL, SHA, TEP
	Resistance	Power	Terminal	Resistance	Level 1	Level 2	
Part Number	Value (Ohms)	Rating (W)	Characteristic (#)	Tolerance (%)	(FRL)(&)	(FRL)(&)	Manufacturer
RWR78#8661%&	8660	10	S, W, N, Z	B, D, F	S	P, R	DAL, SHA, TEP
RWR78#8761%&	8760	10	S, W, N, Z	B, D	S	P, R	DAL, SHA, TEP
RWR78#8871%&	8870	10	S, W, N, Z	B, D, F	S	P, R	DAL, SHA, TEP
RWR78#8981%&	8980	10	S, W, N, Z	B, D	S	P, R	DAL, SHA, TEP
RWR78#9091%&	9090	10	S, W, N, Z	B, D, F	S	P, R	DAL, SHA, TEP
RWR78#9201%&	9200	10	S, W, N, Z	B, D	S	P, R	DAL, SHA, TEP
RWR78#9311%&	9310	10	S, W, N, Z	B, D, F	S	P, R	DAL, SHA, TEP
	Resistance	Power	Terminal	Resistance	Level 1	Level 2	
Part Number	Value (Ohms)	Rating (W)	Characteristic (#)	Tolerance (%)	(FRL)(&)	(FRL)(&)	Manufacturer
RWR78#9421%&	9420	10	S, W, N, Z	B, D	S	P, R	DAL, SHA, TEP
RWR78#9531%&	9530	10	S, W, N, Z	B, D, F	S	P, R	DAL, SHA, TEP
RWR78#9651%&	9650	10	S, W, N, Z	B, D	S	P, R	DAL, SHA, TEP
RWR78#9761%&	9760	10	S, W, N, Z	B, D, F	S	P, R	DAL, SHA, TEP
RWR78#9881%&	9880	10	S, W, N, Z	B, D	S	P, R	DAL, SHA, TEP

RWR78 Wirewound Resistors: 10000 Ohms through 39200 Ohms

	Resistance	Power	Terminal	Resistance	Level 1	Level 2	
Part Number	Value (Ohms)	Rating (W)	Characteristic (#)	Tolerance (%)	(FRL)(&)	(FRL)(&)	Manufacturer
RWR78#1002%&	10000	10	S, W, N, Z	B, D, F	S	P, R	DAL, SHA, TEP
RWR78#1012%&	10100	10	S, W, N, Z	B, D	S	P, R	DAL, SHA, TEP
RWR78#1022%&	10200	10	S, W, N, Z	B, D, F	S	P, R	DAL, SHA, TEP
RWR78#1042%&	10400	10	S, W, N, Z	B, D	S	P, R	DAL, SHA, TEP
RWR78#1052%&	10500	10	S, W, N, Z	B, D, F	S	P, R	DAL, SHA, TEP
RWR78#1062%&	10600	10	S, W, N, Z	B, D	S	P, R	DAL, SHA, TEP

RWR78#1072%&	10700	10	S, W, N, Z	B, D, F	S	P, R	DAL, SHA, TEP
	Resistance	Power	Terminal	Resistance	Level 1	Level 2	
Part Number	Value (Ohms)	Rating (W)	Characteristic (#)	Tolerance (%)	(FRL)(&)	(FRL)(&)	Manufacturer
RWR78#1092%&	10900	10	S, W, N, Z	B, D	S	P, R	DAL, SHA, TEP
RWR78#1102%&	11000	10	S, W, N, Z	B, D, F	S	P, R	DAL, SHA, TEP
RWR78#1112%&	11100	10	S, W, N, Z	B, D	S	P, R	DAL, SHA, TEP
RWR78#1132%&	11300	10	S, W, N, Z	B, D, F	S	P, R	DAL, SHA, TEP
RWR78#1142%&	11400	10	S, W, N, Z	B, D	S	P, R	DAL, SHA, TEP
RWR78#1152%&	11500	10	S, W, N, Z	B, D, F	S	P, R	DAL, SHA, TEP
RWR78#1172%&	11700	10	S, W, N, Z	B, D	S	P, R	DAL, SHA, TEP
	Resistance	Power	Terminal	Resistance	Level 1	Level 2	
Part Number	Value (Ohms)	Rating (W)	Characteristic (#)	Tolerance (%)	(FRL)(&)	(FRL)(&)	Manufacturer
RWR78#1182%&	11800	10	S, W, N, Z	B, D, F	S	P, R	DAL, SHA, TEP
RWR78#1202%&	12000	10	S, W, N, Z	B, D	S	P, R	DAL, SHA, TEP
RWR78#1212%&	12100	10	S, W, N, Z	B, D, F	S	P, R	DAL, SHA, TEP
RWR78#1232%&	12300	10	S, W, N, Z	B, D	S	P, R	DAL, SHA, TEP
RWR78#1242%&	12400	10	S, W, N, Z	B, D, F	S	P, R	DAL, SHA, TEP
RWR78#1262%&	12600	10	S, W, N, Z	B, D	S	P, R	DAL, SHA, TEP
RWR78#1272%&	12700	10	S, W, N, Z	B, D, F	S	P, R	DAL, SHA, TEP
	Resistance	Power	Terminal	Resistance	Level 1	Level 2	
Part Number	Value (Ohms)	Rating (W)	Characteristic (#)	Tolerance (%)	(FRL)(&)	(FRL)(&)	Manufacturer
RWR78#1292%&	12900	10	S, W, N, Z	B, D	S	P, R	DAL, SHA, TEP
RWR78#1302%&	13000	10	S, W, N, Z	B, D, F	S	P, R	DAL, SHA, TEP
RWR78#1322%&	13200	10	S, W, N, Z	B, D	S	P, R	DAL, SHA, TEP
RWR78#1332%&	13300	10	S, W, N, Z	B, D, F	S	P, R	DAL, SHA, TEP
RWR78#1352%&	13500	10	S, W, N, Z	B, D	S	P, R	DAL, SHA, TEP
RWR78#1372%&	13700	10	S, W, N, Z	B, D, F	S	P, R	DAL, SHA, TEP
RWR78#1382%&	13800	10	S, W, N, Z	B, D	S	P, R	DAL, SHA, TEP
	Resistance	Power	Terminal	Resistance	Level 1	Level 2	
Part Number	Value (Ohms)	Rating (W)	Characteristic (#)	Tolerance (%)	(FRL)(&)	(FRL)(&)	Manufacturer
RWR78#1402%&	14000	10	S, W, N, Z	B, D, F	S	P, R	DAL, SHA, TEP
RWR78#1422%&	14200	10	S, W, N, Z	B, D	S	P, R	DAL, SHA, TEP
RWR78#1432%&	14300	10	S, W, N, Z	B, D, F	S	P, R	DAL, SHA, TEP
RWR78#1452%&	14500	10	S, W, N, Z	B, D	S	P, R	DAL, SHA, TEP
RWR78#1472%&	14700	10	S, W, N, Z	B, D, F	S	P, R	DAL, SHA, TEP
RWR78#1492%&	14900	10	S, W, N, Z	B, D	S	P, R	DAL, SHA, TEP
RWR78#1502%&	15000	10	S, W, N, Z	B, D, F	S	P, R	DAL, SHA, TEP
	Resistance	Power	Terminal	Resistance	Level 1	Level 2	
Part Number	Value (Ohms)	Rating (W)	Characteristic (#)	Tolerance (%)	(FRL)(&)	(FRL)(&)	Manufacturer
RWR78#1522%&	15200	10	S, W, N, Z	B, D	S	P, R	DAL, SHA, TEP
RWR78#1542%&	15400	10	S, W, N, Z	B, D, F	S	P, R	DAL, SHA, TEP
RWR78#1562%&	15600	10	S, W, N, Z	B, D	S	P, R	DAL, SHA, TEP
RWR78#1582%&	15800	10	S, W, N, Z	B, D, F	S	P, R	DAL, SHA, TEP
RWR78#1602%&	16000	10	S, W, N, Z	B, D	S	P, R	DAL, SHA, TEP
RWR78#1622%&	16200	10	S, W, N, Z	B, D, F	S	P, R	DAL, SHA, TEP
RWR78#1642%&	16400	10	S, W, N, Z	B, D	S	P, R	DAL, SHA, TEP
	Resistance	Power	Terminal	Resistance	Level 1	Level 2	

Part Number	Value (Ohms)	Rating (W)	Characteristic (#)	Tolerance (%)	(FRL)(&)	(FRL)(&)	Manufacturer
RWR78#1652%&	16500	10	S, W, N, Z	B, D, F	S	P, R	DAL, SHA, TEP
RWR78#1672%&	16700	10	S, W, N, Z	B, D	S	P, R	DAL, SHA, TEP
RWR78#1692%&	16900	10	S, W, N, Z	B, D, F	S	P, R	DAL, SHA, TEP
RWR78#1722%&	17200	10	S, W, N, Z	B, D	S	P, R	DAL, SHA, TEP
RWR78#1742%&	17400	10	S, W, N, Z	B, D, F	S	P, R	DAL, SHA, TEP
RWR78#1762%&	17600	10	S, W, N, Z	B, D	S	P, R	DAL, SHA, TEP
	Resistance	Power	Terminal	Resistance	Level 1	Level 2	
Part Number	Value (Ohms)	Rating (W)	Characteristic (#)	Tolerance (%)	(FRL)(&)	(FRL)(&)	Manufacturer
RWR78#1782%&	17800	10	S, W, N, Z	B, D, F	S	P, R	DAL, SHA, TEP
RWR78#1802%&	18000	10	S, W, N, Z	B, D, F	S	P, R	DAL, SHA, TEP
RWR78#1822%&	18200	10	S, W, N, Z	B, D, F	S	P, R	DAL, SHA, TEP
RWR78#1842%&	18400	10	S, W, N, Z	B, D	S	P, R	DAL, SHA, TEP
RWR78#1872%&	18700	10	S, W, N, Z	B, D, F	S	P, R	DAL, SHA, TEP
RWR78#1892%&	18900	10	S, W, N, Z	B, D	S	P, R	DAL, SHA, TEP
RWR78#1912%&	19100	10	S, W, N, Z	B, D, F	S	P, R	DAL, SHA, TEP
	Resistance	Power	Terminal	Resistance	Level 1	Level 2	
Part Number	Value (Ohms)	Rating (W)	Characteristic (#)	Tolerance (%)	(FRL)(&)	(FRL)(&)	Manufacturer
RWR78#1932%&	19300	10	S, W, N, Z	B, D	S	P, R	DAL, SHA, TEP
RWR78#1962%&	19600	10	S, W, N, Z	B, D, F	S	P, R	DAL, SHA, TEP
RWR78#1982%&	19800	10	S, W	B, D	S	P, R	DAL, SHA, TEP
RWR78#2002%&	20000	10	S, W	B, D, F	S	P, R	DAL, SHA, TEP
RWR78#2032%&	20300	10	S, W	B, D	S	P, R	DAL, SHA, TEP
RWR78#2052%&	20500	10	S, W	B, D, F	S	P, R	DAL, SHA, TEP
RWR78#2082%&	20800	10	S, W	B, D	S	P, R	DAL, SHA, TEP
	Resistance	Power	Terminal	Resistance	Level 1	Level 2	
Part Number	Value (Ohms)	Rating (W)	Characteristic (#)	Tolerance (%)	(FRL)(&)	(FRL)(&)	Manufacturer
RWR78#2102%&	21000	10	S, W	B, D, F	S	P, R	DAL, SHA, TEP
RWR78#2132%&	21300	10	S, W	B, D	S	P, R	DAL, SHA, TEP
RWR78#2152%&	21500	10	S, W	B, D, F	S	P, R	DAL, SHA, TEP
RWR78#2182%&	21800	10	S, W	B, D	S	P, R	DAL, SHA, TEP
RWR78#2212%&	22100	10	S, W	B, D, F	S	P, R	DAL, SHA, TEP
RWR78#2232%&	22300	10	S, W	B, D	S	P, R	DAL, SHA, TEP
RWR78#2262%&	22600	10	S, W	B, D, F	S	P, R	DAL, SHA, TEP
	Resistance	Power	Terminal	Resistance	Level 1	Level 2	
Part Number	Value (Ohms)	Rating (W)	Characteristic (#)	Tolerance (%)	(FRL)(&)	(FRL)(&)	Manufacturer
RWR78#2292%&	22900	10	S, W	B, D	S	P, R	DAL, SHA, TEP
RWR78#2322%&	23200	10	S, W	B, D, F	S	P, R	DAL, SHA, TEP
RWR78#2342%&	23400	10	S, W	B, D	S	P, R	DAL, SHA, TEP
RWR78#2372%&	23700	10	S, W	B, D, F	S	P, R	DAL, SHA, TEP
RWR78#2402%&	24000	10	S, W	B, D	S	P, R	DAL, SHA, TEP
RWR78#2432%&	24300	10	S, W	B, D, F	S	P, R	DAL, SHA, TEP
RWR78#2462%&	24600	10	S, W	B, D	S	P, R	DAL, SHA, TEP
	Resistance	Power	Terminal	Resistance	Level 1	Level 2	
Part Number	Value (Ohms)	Rating (W)	Characteristic (#)	Tolerance (%)	(FRL)(&)	(FRL)(&)	Manufacturer
RWR78#2492%&	24900	10	S, W	B, D, F	S	P, R	DAL, SHA, TEP
RWR78#2522%&	25200	10	S, W	B, D	S	P, R	DAL, SHA, TEP

RWR78#2552%&	25500	10	S, W	B, D, F	S	P, R	DAL, SHA, TEP
RWR78#2582%&	25800	10	S, W	B, D	S	P, R	DAL, SHA, TEP
RWR78#2612%&	26100	10	S, W	B, D, F	S	P, R	DAL, SHA, TEP
RWR78#2642%&	26400	10	S, W	B, D	S	P, R	DAL, SHA, TEP
RWR78#2672%&	26700	10	S, W	B, D, F	S	P, R	DAL, SHA, TEP
	Resistance	Power	Terminal	Resistance	Level 1	Level 2	
Part Number	Value (Ohms)	Rating (W)	Characteristic (#)	Tolerance (%)	(FRL)(&)	(FRL)(&)	Manufacturer
RWR78#2712%&	27100	10	S, W	B, D	S	P, R	DAL, SHA, TEP
RWR78#2742%&	27400	10	S, W	B, D, F	S	P, R	DAL, SHA, TEP
RWR78#2772%&	27700	10	S, W	B, D	S	P, R	DAL, SHA, TEP
RWR78#2802%&	28000	10	S, W	B, D, F	S	P, R	DAL, SHA, TEP
RWR78#2842%&	28400	10	S, W	B, D	S	P, R	DAL, SHA, TEP
RWR78#2872%&	28700	10	S, W	B, D, F	S	P, R	DAL, SHA, TEP
RWR78#2912%&	29100	10	S, W	B, D	S	P, R	DAL, SHA, TEP
	Resistance	Power	Terminal	Resistance	Level 1	Level 2	
Part Number	Value (Ohms)	Rating (W)	Characteristic (#)	Tolerance (%)	(FRL)(&)	(FRL)(&)	Manufacturer
RWR78#2942%&	29400	10	S, W	B, D, F	S	P, R	DAL, SHA, TEP
RWR78#2982%&	29800	10	S, W	B, D	S	P, R	DAL, SHA, TEP
RWR78#3012%&	30100	10	S, W	B, D, F	S	P, R	DAL, SHA, TEP
RWR78#3052%&	30500	10	S, W	B, D	S	P, R	DAL, SHA, TEP
RWR78#3092%&	30900	10	S, W	B, D, F	S	P, R	DAL, SHA, TEP
RWR78#3122%&	31200	10	S, W	B, D	S	P, R	DAL, SHA, TEP
RWR78#3162%&	31600	10	S, W	B, D, F	S	P, R	DAL, SHA, TEP
	Resistance	Power	Terminal	Resistance	Level 1	Level 2	
Part Number	Value (Ohms)	Rating (W)	Characteristic (#)	Tolerance (%)	(FRL)(&)	(FRL)(&)	Manufacturer
RWR78#3202%&	32000	10	S, W	B, D	S	P, R	DAL, SHA, TEP
RWR78#3242%&	32400	10	S, W	B, D, F	S	P, R	DAL, SHA, TEP
RWR78#3282%&	32800	10	S, W	B, D	S	P, R	DAL, SHA, TEP
RWR78#3322%&	33200	10	S, W	B, D, F	S	P, R	DAL, SHA, TEP
RWR78#3362%&	33600	10	S, W	B, D	S	P, R	DAL, SHA, TEP
RWR78#3402%&	34000	10	S, W	B, D, F	S	P, R	DAL, SHA, TEP
RWR78#3442%&	34400	10	S, W	B, D	S	P, R	DAL, SHA, TEP
	Resistance	Power	Terminal	Resistance	Level 1	Level 2	
Part Number	Value (Ohms)	Rating (W)	Characteristic (#)	Tolerance (%)	(FRL)(&)	(FRL)(&)	Manufacturer
RWR78#3482%&	34800	10	S, W	B, D, F	S	P, R	DAL, SHA, TEP
RWR78#3522%&	35200	10	S, W	B, D	S	P, R	DAL, SHA, TEP
RWR78#3572%&	35700	10	S, W	B, D, F	S	P, R	DAL, SHA, TEP
RWR78#3612%&	36100	10	S, W	B, D	S	P, R	DAL, SHA, TEP
RWR78#3652%&	36500	10	S, W	B, D, F	S	P, R	DAL, SHA, TEP
RWR78#3702%&	37000	10	S, W	B, D	S	P, R	DAL, SHA, TEP
RWR78#3742%&	37400	10	S, W	B, D, F	S	P, R	DAL, SHA, TEP
	Resistance	Power	Terminal	Resistance	Level 1	Level 2	
Part Number	Value (Ohms)	Rating (W)	Characteristic (#)	Tolerance (%)	(FRL)(&)	(FRL)(&)	Manufacturer
RWR78#3792%&	37900	10	S, W	B, D	S	P, R	DAL, SHA, TEP
RWR78#3832%&	38300	10	S, W	B, D, F	S	P, R	DAL, SHA, TEP
RWR78#3882%&	38800	10	S, W	B, D	S	P, R	DAL, SHA, TEP
RWR78#3922%&	39200	10	S, W	B, D, F	S	P, R	DAL, SHA, TEP

	Resistance	Power	Terminal	Resistance	Level 1	Level 2	
Part Number	Value (Ohms)	Rating (W)	Characteristic (#)	Tolerance (%)	(FRL)(&)	(FRL)(&)	Manufacturer

RWR80 Wirewound Resistors

	Resistance	Power	Terminal	Resistance	Level 1	Level 2	
Part Number	Value (Ohms)	Rating (W)	Characteristic (#)	Tolerance (%)	(FRL)(&)	(FRL)(&)	Manufacturer
RWR80#R100%&	0.100	2	S, W, N, Z	B, D, F	S	P, R	DAL, SHA, TEP
RWR80#R101%&	0.101	2	S, W, N, Z	B, D	S	P, R	DAL, SHA, TEP
RWR80#R102%&	0.102	2	S, W, N, Z	B, D, F	S	P, R	DAL, SHA, TEP
RWR80#R104%&	0.104	2	S, W, N, Z	B, D	S	P, R	DAL, SHA, TEP
RWR80#R105%&	0.105	2	S, W, N, Z	B, D, F	S	P, R	DAL, SHA, TEP
RWR80#R106%&	0.106	2	S, W, N, Z	B, D	S	P, R	DAL, SHA, TEP
RWR80#R107%&	0.107	2	S, W, N, Z	B, D, F	S	P, R	DAL, SHA, TEP
RWR80#R109%&	0.109	2	S, W, N, Z	B, D	S	P, R	DAL, SHA, TEP
RWR80#R110%&	0.110	2	S, W, N, Z	B, D, F	S	P, R	DAL, SHA, TEP
RWR80#R111%&	0.111	2	S, W, N, Z	B, D	S	P, R	DAL, SHA, TEP
RWR80#R113%&	0.113	2	S, W, N, Z	B, D, F	S	P, R	DAL, SHA, TEP
RWR80#R114%&	0.114	2	S, W, N, Z	B, D	S	P, R	DAL, SHA, TEP
RWR80#R115%&	0.115	2	S, W, N, Z	B, D, F	S	P, R	DAL, SHA, TEP
RWR80#R117%&	0.117	2	S, W, N, Z	B, D	S	P, R	DAL, SHA, TEP
RWR80#R118%&	0.118	2	S, W, N, Z	B, D, F	S	P, R	DAL, SHA, TEP
RWR80#R120%&	0.120	2	S, W, N, Z	B, D	S	P, R	DAL, SHA, TEP
RWR80#R121%&	0.121	2	S, W, N, Z	B, D, F	S	P, R	DAL, SHA, TEP
RWR80#R123%&	0.123	2	S, W, N, Z	B, D	S	P, R	DAL, SHA, TEP
RWR80#R124%&	0.124	2	S, W, N, Z	B, D, F	S	P, R	DAL, SHA, TEP
RWR80#R126%&	0.126	2	S, W, N, Z	B, D	S	P, R	DAL, SHA, TEP
RWR80#R127%&	0.127	2	S, W, N, Z	B, D, F	S	P, R	DAL, SHA, TEP
RWR80#R129%&	0.129	2	S, W, N, Z	B, D	S	P, R	DAL, SHA, TEP
RWR80#R130%&	0.130	2	S, W, N, Z	B, D, F	S	P, R	DAL, SHA, TEP
RWR80#R132%&	0.132	2	S, W, N, Z	B, D	S	P, R	DAL, SHA, TEP
RWR80#R133%&	0.133	2	S, W, N, Z	B, D, F	S	P, R	DAL, SHA, TEP
RWR80#R135%&	0.135	2	S, W, N, Z	B, D	S	P, R	DAL, SHA, TEP
RWR80#R137%&	0.137	2	S, W, N, Z	B, D, F	S	P, R	DAL, SHA, TEP
RWR80#R138%&	0.138	2	S, W, N, Z	B, D	S	P, R	DAL, SHA, TEP
RWR80#R140%&	0.140	2	S, W, N, Z	B, D, F	S	P, R	DAL, SHA, TEP
RWR80#R142%&	0.142	2	S, W, N, Z	B, D	S	P, R	DAL, SHA, TEP
RWR80#R143%&	0.143	2	S, W, N, Z	B, D, F	S	P, R	DAL, SHA, TEP
RWR80#R145%&	0.145	2	S, W, N, Z	B, D	S	P, R	DAL, SHA, TEP
RWR80#R147%&	0.147	2	S, W, N, Z	B, D, F	S	P, R	DAL, SHA, TEP
RWR80#R149%&	0.149	2	S, W, N, Z	B, D	S	P, R	DAL, SHA, TEP
RWR80#R150%&	0.150	2	S, W, N, Z	B, D, F	S	P, R	DAL, SHA, TEP
RWR80#R152%&	0.152	2	S, W, N, Z	B, D	S	P, R	DAL, SHA, TEP
RWR80#R154%&	0.154	2	S, W, N, Z	B, D, F	S	P, R	DAL, SHA, TEP
RWR80#R156%&	0.156	2	S, W, N, Z	B, D	S	P, R	DAL, SHA, TEP

RWR80#R158%&	0.158	2	S, W, N, Z	B, D, F	S	P, R	DAL, SHA, TEP
RWR80#R160%&	0.160	2	S, W, N, Z	B, D	S	P, R	DAL, SHA, TEP
RWR80#R162%&	0.162	2	S, W, N, Z	B, D, F	S	P, R	DAL, SHA, TEP
RWR80#R164%&	0.164	2	S, W, N, Z	B, D	S	P, R	DAL, SHA, TEP
RWR80#R165%&	0.165	2	S, W, N, Z	B, D, F	S	P, R	DAL, SHA, TEP
RWR80#R167%&	0.167	2	S, W, N, Z	B, D	S	P, R	DAL, SHA, TEP
RWR80#R169%&	0.169	2	S, W, N, Z	B, D, F	S	P, R	DAL, SHA, TEP
RWR80#R172%&	0.172	2	S, W, N, Z	B, D	S	P, R	DAL, SHA, TEP
RWR80#R174%&	0.174	2	S, W, N, Z	B, D, F	S	P, R	DAL, SHA, TEP
RWR80#R176%&	0.176	2	S, W, N, Z	B, D	S	P, R	DAL, SHA, TEP
RWR80#R178#&	0.178	2	S, W, N, Z	B, D, F	S	P, R	DAL, SHA, TEP
RWR80#R180%&	0.180	2	S, W, N, Z	B, D, F	S	P, R	DAL, SHA, TEP
RWR80#R182%&	0.182	2	S, W, N, Z	B, D, F	S	P, R	DAL, SHA, TEP
RWR80#R184%&	0.184	2	S, W, N, Z	B, D	S	P, R	DAL, SHA, TEP
RWR80#R187%&	0.187	2	S, W, N, Z	B, D, F	S	P, R	DAL, SHA, TEP
RWR80#R189%&	0.189	2	S, W, N, Z	B, D	S	P, R	DAL, SHA, TEP
RWR80#R191%&	0.191	2	S, W, N, Z	B, D, F	S	P, R	DAL, SHA, TEP
RWR80#R193%&	0.193	2	S, W, N, Z	B, D	S	P, R	DAL, SHA, TEP
RWR80#R196%&	0.196	2	S, W, N, Z	B, D, F	S	P, R	DAL, SHA, TEP
RWR80#R198%&	0.198	2	S, W, N, Z	B, D	S	P, R	DAL, SHA, TEP
RWR80#R200%&	0.200	2	S, W, N, Z	B, D, F	S	P, R	DAL, SHA, TEP
RWR80#R203%&	0.203	2	S, W, N, Z	B, D	S	P, R	DAL, SHA, TEP
RWR80#R205%&	0.205	2	S, W, N, Z	B, D, F	S	P, R	DAL, SHA, TEP
RWR80#R208%&	0.208	2	S, W, N, Z	B, D	S	P, R	DAL, SHA, TEP
RWR80#R210%&	0.210	2	S, W, N, Z	B, D, F	S	P, R	DAL, SHA, TEP
RWR80#R213%&	0.213	2	S, W, N, Z	B, D	S	P, R	DAL, SHA, TEP
RWR80#R215%&	0.215	2	S, W, N, Z	B, D, F	S	P, R	DAL, SHA, TEP
RWR80#R218%&	0.218	2	S, W, N, Z	B, D	S	P, R	DAL, SHA, TEP
RWR80#R221%&	0.221	2	S, W, N, Z	B, D, F	S	P, R	DAL, SHA, TEP
RWR80#R223%&	0.223	2	S, W, N, Z	B, D	S	P, R	DAL, SHA, TEP
RWR80#R226%&	0.226	2	S, W, N, Z	B, D, F	S	P, R	DAL, SHA, TEP
RWR80#R229%&	0.229	2	S, W, N, Z	B, D	S	P, R	DAL, SHA, TEP
RWR80#R232%&	0.232	2	S, W, N, Z	B, D, F	S	P, R	DAL, SHA, TEP
RWR80#R234%&	0.234	2	S, W, N, Z	B, D	S	P, R	DAL, SHA, TEP
RWR80#R237%&	0.237	2	S, W, N, Z	B, D, F	S	P, R	DAL, SHA, TEP
RWR80#R240%&	0.240	2	S, W, N, Z	B, D	S	P, R	DAL, SHA, TEP
RWR80#R243%&	0.243	2	S, W, N, Z	B, D, F	S	P, R	DAL, SHA, TEP
RWR80#R246%&	0.246	2	S, W, N, Z	B, D	S	P, R	DAL, SHA, TEP
RWR80#R249%&	0.249	2	S, W, N, Z	B, D, F	S	P, R	DAL, SHA, TEP
RWR80#R252%&	0.252	2	S, W, N, Z	B, D	S	P, R	DAL, SHA, TEP
RWR80#R255%&	0.255	2	S, W, N, Z	B, D, F	S	P, R	DAL, SHA, TEP
RWR80#R258%&	0.258	2	S, W, N, Z	B, D	S	P, R	DAL, SHA, TEP
RWR80#R261%&	0.261	2	S, W, N, Z	B, D, F	S	P, R	DAL, SHA, TEP
RWR80#R264%&	0.264	2	S, W, N, Z	B, D	S	P, R	DAL, SHA, TEP
RWR80#R267%&	0.267	2	S, W, N, Z	B, D, F	S	P, R	DAL, SHA, TEP
RWR80#R271%&	0.271	2	S, W, N, Z	B, D	S	P, R	DAL, SHA, TEP
RWR80#R274%&	0.274	2	S, W, N, Z	B, D, F	S	P, R	DAL, SHA, TEP

RWR80#R277%&	0.277	2	S, W, N, Z	B, D	S	P, R	DAL, SHA, TEP
RWR80#R280%&	0.280	2	S, W, N, Z	B, D, F	S	P, R	DAL, SHA, TEP
RWR80#R284%&	0.284	2	S, W, N, Z	B, D	S	P, R	DAL, SHA, TEP
RWR80#R287%&	0.287	2	S, W, N, Z	B, D, F	S	P, R	DAL, SHA, TEP
RWR80#R291%&	0.291	2	S, W, N, Z	B, D	S	P, R	DAL, SHA, TEP
RWR80#R294%&	0.294	2	S, W, N, Z	B, D, F	S	P, R	DAL, SHA, TEP
RWR80#R298%&	0.298	2	S, W, N, Z	B, D	S	P, R	DAL, SHA, TEP
RWR80#R301%&	0.301	2	S, W, N, Z	B, D, F	S	P, R	DAL, SHA, TEP
RWR80#R305%&	0.305	2	S, W, N, Z	B, D	S	P, R	DAL, SHA, TEP
RWR80#R309%&	0.309	2	S, W, N, Z	B, D, F	S	P, R	DAL, SHA, TEP
RWR80#R312%&	0.312	2	S, W, N, Z	B, D	S	P, R	DAL, SHA, TEP
RWR80#R316%&	0.316	2	S, W, N, Z	B, D, F	S	P, R	DAL, SHA, TEP
RWR80#R320%&	0.320	2	S, W, N, Z	B, D	S	P, R	DAL, SHA, TEP
RWR80#R324%&	0.324	2	S, W, N, Z	B, D, F	S	P, R	DAL, SHA, TEP
RWR80#R328%&	0.328	2	S, W, N, Z	B, D	S	P, R	DAL, SHA, TEP
RWR80#R332%&	0.332	2	S, W, N, Z	B, D, F	S	P, R	DAL, SHA, TEP
RWR80#R336%&	0.336	2	S, W, N, Z	B, D	S	P, R	DAL, SHA, TEP
RWR80#R340%&	0.340	2	S, W, N, Z	B, D, F	S	P, R	DAL, SHA, TEP
RWR80#R344%&	0.344	2	S, W, N, Z	B, D	S	P, R	DAL, SHA, TEP
RWR80#R348%&	0.348	2	S, W, N, Z	B, D, F	S	P, R	DAL, SHA, TEP
RWR80#R352%&	0.352	2	S, W, N, Z	B, D	S	P, R	DAL, SHA, TEP
RWR80#R357%&	0.357	2	S, W, N, Z	B, D, F	S	P, R	DAL, SHA, TEP
RWR80#R361%&	0.361	2	S, W, N, Z	B, D	S	P, R	DAL, SHA, TEP
RWR80#R365%&	0.365	2	S, W, N, Z	B, D, F	S	P, R	DAL, SHA, TEP
RWR80#R370%&	0.370	2	S, W, N, Z	B, D	S	P, R	DAL, SHA, TEP
RWR80#R374%&	0.374	2	S, W, N, Z	B, D, F	S	P, R	DAL, SHA, TEP
RWR80#R379%&	0.379	2	S, W, N, Z	B, D	S	P, R	DAL, SHA, TEP
RWR80#R383%&	0.383	2	S, W, N, Z	B, D, F	S	P, R	DAL, SHA, TEP
RWR80#R388%&	0.388	2	S, W, N, Z	B, D	S	P, R	DAL, SHA, TEP
RWR80#R392%&	0.392	2	S, W, N, Z	B, D, F	S	P, R	DAL, SHA, TEP
RWR80#R397%&	0.397	2	S, W, N, Z	B, D	S	P, R	DAL, SHA, TEP
RWR80#R402%&	0.402	2	S, W, N, Z	B, D, F	S	P, R	DAL, SHA, TEP
RWR80#R407%&	0.407	2	S, W, N, Z	B, D	S	P, R	DAL, SHA, TEP
RWR80#R412%&	0.412	2	S, W, N, Z	B, D, F	S	P, R	DAL, SHA, TEP
RWR80#R417%&	0.417	2	S, W, N, Z	B, D	S	P, R	DAL, SHA, TEP
RWR80#R422%&	0.422	2	S, W, N, Z	B, D, F	S	P, R	DAL, SHA, TEP
RWR80#R427%&	0.427	2	S, W, N, Z	B, D	S	P, R	DAL, SHA, TEP
RWR80#R432%&	0.432	2	S, W, N, Z	B, D, F	S	P, R	DAL, SHA, TEP
RWR80#R437%&	0.437	2	S, W, N, Z	B, D	S	P, R	DAL, SHA, TEP
RWR80#R442%&	0.442	2	S, W, N, Z	B, D, F	S	P, R	DAL, SHA, TEP
RWR80#R448%&	0.448	2	S, W, N, Z	B, D	S	P, R	DAL, SHA, TEP
RWR80#R453%&	0.453	2	S, W, N, Z	B, D, F	S	P, R	DAL, SHA, TEP
RWR80#R459%&	0.459	2	S, W, N, Z	B, D	S	P, R	DAL, SHA, TEP
RWR80#R464%&	0.464	2	S, W, N, Z	B, D, F	S	P, R	DAL, SHA, TEP
RWR80#R470%&	0.470	2	S, W, N, Z	B, D	S	P, R	DAL, SHA, TEP
RWR80#R475%&	0.475	2	S, W, N, Z	B, D, F	S	P, R	DAL, SHA, TEP
RWR80#R481%&	0.481	2	S, W, N, Z	B, D	S	P, R	DAL, SHA, TEP

RWR80#R487%&	0.487	2	S, W, N, Z	B, D, F	S	P, R	DAL, SHA, TEP
RWR80#R493%&	0.493	2	S, W, N, Z	B, D	S	P, R	DAL, SHA, TEP
RWR80#R499%&	0.499	2	S, W, N, Z	B, D, F	S	P, R	DAL, SHA, TEP
RWR80#R505%&	0.505	2	S, W, N, Z	B, D	S	P, R	DAL, SHA, TEP
RWR80#R511%&	0.511	2	S, W, N, Z	B, D, F	S	P, R	DAL, SHA, TEP
RWR80#R517%&	0.517	2	S, W, N, Z	B, D	S	P, R	DAL, SHA, TEP
RWR80#R523%&	0.523	2	S, W, N, Z	B, D, F	S	P, R	DAL, SHA, TEP
RWR80#R530%&	0.530	2	S, W, N, Z	B, D	S	P, R	DAL, SHA, TEP
RWR80#R536%&	0.536	2	S, W, N, Z	B, D, F	S	P, R	DAL, SHA, TEP
RWR80#R542%&	0.542	2	S, W, N, Z	B, D	S	P, R	DAL, SHA, TEP
RWR80#R549%&	0.549	2	S, W, N, Z	B, D, F	S	P, R	DAL, SHA, TEP
RWR80#R556%&	0.556	2	S, W, N, Z	B, D	S	P, R	DAL, SHA, TEP
RWR80#R562%&	0.562	2	S, W, N, Z	B, D, F	S	P, R	DAL, SHA, TEP
RWR80#R569%&	0.569	2	S, W, N, Z	B, D	S	P, R	DAL, SHA, TEP
RWR80#R576%&	0.576	2	S, W, N, Z	B, D, F	S	P, R	DAL, SHA, TEP
RWR80#R583%&	0.583	2	S, W, N, Z	B, D	S	P, R	DAL, SHA, TEP
RWR80#R590%&	0.590	2	S, W, N, Z	B, D, F	S	P, R	DAL, SHA, TEP
RWR80#R597%&	0.597	2	S, W, N, Z	B, D	S	P, R	DAL, SHA, TEP
RWR80#R604%&	0.604	2	S, W, N, Z	B, D, F	S	P, R	DAL, SHA, TEP
RWR80#R612%&	0.612	2	S, W, N, Z	B, D	S	P, R	DAL, SHA, TEP
RWR80#R619%&	0.619	2	S, W, N, Z	B, D, F	S	P, R	DAL, SHA, TEP
RWR80#R626%&	0.626	2	S, W, N, Z	B, D	S	P, R	DAL, SHA, TEP
RWR80#R634%&	0.634	2	S, W, N, Z	B, D, F	S	P, R	DAL, SHA, TEP
RWR80#R642%&	0.642	2	S, W, N, Z	B, D	S	P, R	DAL, SHA, TEP
RWR80#R649%&	0.649	2	S, W, N, Z	B, D, F	S	P, R	DAL, SHA, TEP
RWR80#R657%&	0.657	2	S, W, N, Z	B, D	S	P, R	DAL, SHA, TEP
RWR80#R665%&	0.665	2	S, W, N, Z	B, D, F	S	P, R	DAL, SHA, TEP
RWR80#R673%&	0.673	2	S, W, N, Z	B, D	S	P, R	DAL, SHA, TEP
RWR80#R681%&	0.681	2	S, W, N, Z	B, D, F	S	P, R	DAL, SHA, TEP
RWR80#R690%&	0.690	2	S, W, N, Z	B, D	S	P, R	DAL, SHA, TEP
RWR80#R698%&	0.698	2	S, W, N, Z	B, D, F	S	P, R	DAL, SHA, TEP
RWR80#R706%&	0.706	2	S, W, N, Z	B, D	S	P, R	DAL, SHA, TEP
RWR80#R715%&	0.715	2	S, W, N, Z	B, D, F	S	P, R	DAL, SHA, TEP
RWR80#R723%&	0.723	2	S, W, N, Z	B, D	S	P, R	DAL, SHA, TEP
RWR80#R732%&	0.732	2	S, W, N, Z	B, D, F	S	P, R	DAL, SHA, TEP
RWR80#R741%&	0.741	2	S, W, N, Z	B, D	S	P, R	DAL, SHA, TEP
RWR80#R750%&	0.750	2	S, W, N, Z	B, D, F	S	P, R	DAL, SHA, TEP
RWR80#R759%&	0.759	2	S, W, N, Z	B, D	S	P, R	DAL, SHA, TEP
RWR80#R768%&	0.768	2	S, W, N, Z	B, D, F	S	P, R	DAL, SHA, TEP
RWR80#R776%&	0.776	2	S, W, N, Z	B, D	S	P, R	DAL, SHA, TEP
RWR80#R787%&	0.787	2	S, W, N, Z	B, D, F	S	P, R	DAL, SHA, TEP
RWR80#R796%&	0.796	2	S, W, N, Z	B, D	S	P, R	DAL, SHA, TEP
RWR80#R806%&	0.806	2	S, W, N, Z	B, D, F	S	P, R	DAL, SHA, TEP
RWR80#R816%&	0.816	2	S, W, N, Z	B, D	S	P, R	DAL, SHA, TEP
RWR80#R825%&	0.825	2	S, W, N, Z	B, D, F	S	P, R	DAL, SHA, TEP
RWR80#R835%&	0.835	2	S, W, N, Z	B, D	S	P, R	DAL, SHA, TEP
RWR80#R845%&	0.845	2	S, W, N, Z	B, D, F	S	P, R	DAL, SHA, TEP

RWR80#R856%&	0.856	2	S, W, N, Z	B, D	S	P, R	DAL, SHA, TEP
RWR80#R866%&	0.866	2	S, W, N, Z	B, D, F	S	P, R	DAL, SHA, TEP
RWR80#R876%&	0.876	2	S, W, N, Z	B, D	S	P, R	DAL, SHA, TEP
RWR80#R887%&	0.887	2	S, W, N, Z	B, D, F	S	P, R	DAL, SHA, TEP
RWR80#R898%&	0.898	2	S, W, N, Z	B, D	S	P, R	DAL, SHA, TEP
RWR80#R909%&	0.909	2	S, W, N, Z	B, D, F	S	P, R	DAL, SHA, TEP
RWR80#R920%&	0.920	2	S, W, N, Z	B, D	S	P, R	DAL, SHA, TEP
RWR80#R931%&	0.931	2	S, W, N, Z	B, D, F	S	P, R	DAL, SHA, TEP
RWR80#R942%&	0.942	2	S, W, N, Z	B, D	S	P, R	DAL, SHA, TEP
RWR80#R953%&	0.953	2	S, W, N, Z	B, D, F	S	P, R	DAL, SHA, TEP
RWR80#R965%&	0.965	2	S, W, N, Z	B, D	S	P, R	DAL, SHA, TEP
RWR80#R976%&	0.976	2	S, W, N, Z	B, D, F	S	P, R	DAL, SHA, TEP
RWR80#R988%&	0.988	2	S, W, N, Z	B, D	S	P, R	DAL, SHA, TEP
RWR80#1R00%&	1.00	2	S, W, N, Z	B, D, F	S	P, R	DAL, SHA, TEP
RWR80#1R01%&	1.01	2	S, W, N, Z	B, D	S	P, R	DAL, SHA, TEP
RWR80#1R02%&	1.02	2	S, W, N, Z	B, D, F	S	P, R	DAL, SHA, TEP
RWR80#1R04%&	1.04	2	S, W, N, Z	B, D	S	P, R	DAL, SHA, TEP
RWR80#1R05%&	1.05	2	S, W, N, Z	B, D, F	S	P, R	DAL, SHA, TEP
RWR80#1R06%&	1.06	2	S, W, N, Z	B, D	S	P, R	DAL, SHA, TEP
RWR80#1R07%&	1.07	2	S, W, N, Z	B, D, F	S	P, R	DAL, SHA, TEP
RWR80#1R09%&	1.09	2	S, W, N, Z	B, D	S	P, R	DAL, SHA, TEP
RWR80#1R10%&	1.10	2	S, W, N, Z	B, D, F	S	P, R	DAL, SHA, TEP
RWR80#1R11%&	1.11	2	S, W, N, Z	B, D	S	P, R	DAL, SHA, TEP
RWR80#1R13%&	1.13	2	S, W, N, Z	B, D, F	S	P, R	DAL, SHA, TEP
RWR80#1R14%&	1.14	2	S, W, N, Z	B, D	S	P, R	DAL, SHA, TEP
RWR80#1R15%&	1.15	2	S, W, N, Z	B, D, F	S	P, R	DAL, SHA, TEP
RWR80#1R17%&	1.17	2	S, W, N, Z	B, D	S	P, R	DAL, SHA, TEP
RWR80#1R18%&	1.18	2	S, W, N, Z	B, D, F	S	P, R	DAL, SHA, TEP
RWR80#1R20%&	1.20	2	S, W, N, Z	B, D	S	P, R	DAL, SHA, TEP
RWR80#1R21%&	1.21	2	S, W, N, Z	B, D, F	S	P, R	DAL, SHA, TEP
RWR80#1R23%&	1.23	2	S, W, N, Z	B, D	S	P, R	DAL, SHA, TEP
RWR80#1R24%&	1.24	2	S, W, N, Z	B, D, F	S	P, R	DAL, SHA, TEP
RWR80#1R26%&	1.26	2	S, W, N, Z	B, D	S	P, R	DAL, SHA, TEP
RWR80#1R27%&	1.27	2	S, W, N, Z	B, D, F	S	P, R	DAL, SHA, TEP
RWR80#1R29%&	1.29	2	S, W, N, Z	B, D	S	P, R	DAL, SHA, TEP
RWR80#1R30%&	1.30	2	S, W, N, Z	B, D, F	S	P, R	DAL, SHA, TEP
RWR80#1R32%&	1.32	2	S, W, N, Z	B, D	S	P, R	DAL, SHA, TEP
RWR80#1R33%&	1.33	2	S, W, N, Z	B, D, F	S	P, R	DAL, SHA, TEP
RWR80#1R35%&	1.35	2	S, W, N, Z	B, D	S	P, R	DAL, SHA, TEP
RWR80#1R37%&	1.37	2	S, W, N, Z	B, D, F	S	P, R	DAL, SHA, TEP
RWR80#1R38%&	1.38	2	S, W, N, Z	B, D	S	P, R	DAL, SHA, TEP
RWR80#1R40%&	1.40	2	S, W, N, Z	B, D, F	S	P, R	DAL, SHA, TEP
RWR80#1R42%&	1.42	2	S, W, N, Z	B, D	S	P, R	DAL, SHA, TEP
RWR80#1R43%&	1.43	2	S, W, N, Z	B, D, F	S	P, R	DAL, SHA, TEP
RWR80#1R45%&	1.45	2	S, W, N, Z	B, D	S	P, R	DAL, SHA, TEP
RWR80#1R47%&	1.47	2	S, W, N, Z	B, D, F	S	P, R	DAL, SHA, TEP
RWR80#1R49%&	1.49	2	S, W, N, Z	B, D	S	P, R	DAL, SHA, TEP

RWR80#1R50%&	1.50	2	S, W, N, Z	B, D, F	S	P, R	DAL, SHA, TEP
RWR80#1R52%&	1.52	2	S, W, N, Z	B, D	S	P, R	DAL, SHA, TEP
RWR80#1R54%&	1.54	2	S, W, N, Z	B, D, F	S	P, R	DAL, SHA, TEP
RWR80#1R56%&	1.56	2	S, W, N, Z	B, D	S	P, R	DAL, SHA, TEP
RWR80#1R58%&	1.58	2	S, W, N, Z	B, D, F	S	P, R	DAL, SHA, TEP
RWR80#1R60%&	1.60	2	S, W, N, Z	B, D	S	P, R	DAL, SHA, TEP
RWR80#1R62%&	1.62	2	S, W, N, Z	B, D, F	S	P, R	DAL, SHA, TEP
RWR80#1R64%&	1.64	2	S, W, N, Z	B, D	S	P, R	DAL, SHA, TEP
RWR80#1R65%&	1.65	2	S, W, N, Z	B, D, F	S	P, R	DAL, SHA, TEP
RWR80#1R67%&	1.67	2	S, W, N, Z	B, D	S	P, R	DAL, SHA, TEP
RWR80#1R69%&	1.69	2	S, W, N, Z	B, D, F	S	P, R	DAL, SHA, TEP
RWR80#1R72%&	1.72	2	S, W, N, Z	B, D	S	P, R	DAL, SHA, TEP
RWR80#1R74%&	1.74	2	S, W, N, Z	B, D, F	S	P, R	DAL, SHA, TEP
RWR80#1R76%&	1.76	2	S, W, N, Z	B, D	S	P, R	DAL, SHA, TEP
RWR80#1R78#&	1.78	2	S, W, N, Z	B, D, F	S	P, R	DAL, SHA, TEP
RWR80#1R80%&	1.80	2	S, W, N, Z	B, D, F	S	P, R	DAL, SHA, TEP
RWR80#1R82%&	1.82	2	S, W, N, Z	B, D, F	S	P, R	DAL, SHA, TEP
RWR80#1R84%&	1.84	2	S, W, N, Z	B, D	S	P, R	DAL, SHA, TEP
RWR80#1R87%&	1.87	2	S, W, N, Z	B, D, F	S	P, R	DAL, SHA, TEP
RWR80#1R89%&	1.89	2	S, W, N, Z	B, D	S	P, R	DAL, SHA, TEP
RWR80#1R91%&	1.91	2	S, W, N, Z	B, D, F	S	P, R	DAL, SHA, TEP
RWR80#1R93%&	1.93	2	S, W, N, Z	B, D	S	P, R	DAL, SHA, TEP
RWR80#1R96%&	1.96	2	S, W, N, Z	B, D, F	S	P, R	DAL, SHA, TEP
RWR80#1R98%&	1.98	2	S, W, N, Z	B, D	S	P, R	DAL, SHA, TEP
RWR80#2R00%&	2.00	2	S, W, N, Z	B, D, F	S	P, R	DAL, SHA, TEP
RWR80#2R03%&	2.03	2	S, W, N, Z	B, D	S	P, R	DAL, SHA, TEP
RWR80#2R05%&	2.05	2	S, W, N, Z	B, D, F	S	P, R	DAL, SHA, TEP
RWR80#2R08%&	2.08	2	S, W, N, Z	B, D	S	P, R	DAL, SHA, TEP
RWR80#2R10%&	2.10	2	S, W, N, Z	B, D, F	S	P, R	DAL, SHA, TEP
RWR80#2R13%&	2.13	2	S, W, N, Z	B, D	S	P, R	DAL, SHA, TEP
RWR80#2R15%&	2.15	2	S, W, N, Z	B, D, F	S	P, R	DAL, SHA, TEP
RWR80#2R18%&	2.18	2	S, W, N, Z	B, D	S	P, R	DAL, SHA, TEP
RWR80#2R21%&	2.21	2	S, W, N, Z	B, D, F	S	P, R	DAL, SHA, TEP
RWR80#2R23%&	2.23	2	S, W, N, Z	B, D	S	P, R	DAL, SHA, TEP
RWR80#2R26%&	2.26	2	S, W, N, Z	B, D, F	S	P, R	DAL, SHA, TEP
RWR80#2R29%&	2.29	2	S, W, N, Z	B, D	S	P, R	DAL, SHA, TEP
RWR80#2R32%&	2.32	2	S, W, N, Z	B, D, F	S	P, R	DAL, SHA, TEP
RWR80#2R34%&	2.34	2	S, W, N, Z	B, D	S	P, R	DAL, SHA, TEP
RWR80#2R37%&	2.37	2	S, W, N, Z	B, D, F	S	P, R	DAL, SHA, TEP
RWR80#2R40%&	2.40	2	S, W, N, Z	B, D	S	P, R	DAL, SHA, TEP
RWR80#2R43%&	2.43	2	S, W, N, Z	B, D, F	S	P, R	DAL, SHA, TEP
RWR80#2R46%&	2.46	2	S, W, N, Z	B, D	S	P, R	DAL, SHA, TEP
RWR80#2R49%&	2.49	2	S, W, N, Z	B, D, F	S	P, R	DAL, SHA, TEP
RWR80#2R52%&	2.52	2	S, W, N, Z	B, D	S	P, R	DAL, SHA, TEP
RWR80#2R55%&	2.55	2	S, W, N, Z	B, D, F	S	P, R	DAL, SHA, TEP
RWR80#2R58%&	2.58	2	S, W, N, Z	B, D	S	P, R	DAL, SHA, TEP
RWR80#2R61%&	2.61	2	S, W, N, Z	B, D, F	S	P, R	DAL, SHA, TEP

RWR80#2R64%&	2.64	2	S, W, N, Z	B, D	S	P, R	DAL, SHA, TEP
RWR80#2R67%&	2.67	2	S, W, N, Z	B, D, F	S	P, R	DAL, SHA, TEP
RWR80#2R71%&	2.71	2	S, W, N, Z	B, D	S	P, R	DAL, SHA, TEP
RWR80#2R74%&	2.74	2	S, W, N, Z	B, D, F	S	P, R	DAL, SHA, TEP
RWR80#2R77%&	2.77	2	S, W, N, Z	B, D	S	P, R	DAL, SHA, TEP
RWR80#2R80%&	2.80	2	S, W, N, Z	B, D, F	S	P, R	DAL, SHA, TEP
RWR80#2R84%&	2.84	2	S, W, N, Z	B, D	S	P, R	DAL, SHA, TEP
RWR80#2R87%&	2.87	2	S, W, N, Z	B, D, F	S	P, R	DAL, SHA, TEP
RWR80#2R91%&	2.91	2	S, W, N, Z	B, D	S	P, R	DAL, SHA, TEP
RWR80#2R94%&	2.94	2	S, W, N, Z	B, D, F	S	P, R	DAL, SHA, TEP
RWR80#2R98%&	2.98	2	S, W, N, Z	B, D	S	P, R	DAL, SHA, TEP
RWR80#3R01%&	3.01	2	S, W, N, Z	B, D, F	S	P, R	DAL, SHA, TEP
RWR80#3R05%&	3.05	2	S, W, N, Z	B, D	S	P, R	DAL, SHA, TEP
RWR80#3R09%&	3.09	2	S, W, N, Z	B, D, F	S	P, R	DAL, SHA, TEP
RWR80#3R12%&	3.12	2	S, W, N, Z	B, D	S	P, R	DAL, SHA, TEP
RWR80#3R16%&	3.16	2	S, W, N, Z	B, D, F	S	P, R	DAL, SHA, TEP
RWR80#3R20%&	3.20	2	S, W, N, Z	B, D	S	P, R	DAL, SHA, TEP
RWR80#3R24%&	3.24	2	S, W, N, Z	B, D, F	S	P, R	DAL, SHA, TEP
RWR80#3R28%&	3.28	2	S, W, N, Z	B, D	S	P, R	DAL, SHA, TEP
RWR80#3R32%&	3.32	2	S, W, N, Z	B, D, F	S	P, R	DAL, SHA, TEP
RWR80#3R36%&	3.36	2	S, W, N, Z	B, D	S	P, R	DAL, SHA, TEP
RWR80#3R40%&	3.40	2	S, W, N, Z	B, D, F	S	P, R	DAL, SHA, TEP
RWR80#3R44%&	3.44	2	S, W, N, Z	B, D	S	P, R	DAL, SHA, TEP
RWR80#3R48%&	3.48	2	S, W, N, Z	B, D, F	S	P, R	DAL, SHA, TEP
RWR80#3R52%&	3.52	2	S, W, N, Z	B, D	S	P, R	DAL, SHA, TEP
RWR80#3R57%&	3.57	2	S, W, N, Z	B, D, F	S	P, R	DAL, SHA, TEP
RWR80#3R61%&	3.61	2	S, W, N, Z	B, D	S	P, R	DAL, SHA, TEP
RWR80#3R65%&	3.65	2	S, W, N, Z	B, D, F	S	P, R	DAL, SHA, TEP
RWR80#3R70%&	3.70	2	S, W, N, Z	B, D	S	P, R	DAL, SHA, TEP
RWR80#3R74%&	3.74	2	S, W, N, Z	B, D, F	S	P, R	DAL, SHA, TEP
RWR80#3R79%&	3.79	2	S, W, N, Z	B, D	S	P, R	DAL, SHA, TEP
RWR80#3R83%&	3.83	2	S, W, N, Z	B, D, F	S	P, R	DAL, SHA, TEP
RWR80#3R88%&	3.88	2	S, W, N, Z	B, D	S	P, R	DAL, SHA, TEP
RWR80#3R92%&	3.92	2	S, W, N, Z	B, D, F	S	P, R	DAL, SHA, TEP
RWR80#3R97%&	3.97	2	S, W, N, Z	B, D	S	P, R	DAL, SHA, TEP
RWR80#4R02%&	4.02	2	S, W, N, Z	B, D, F	S	P, R	DAL, SHA, TEP
RWR80#4R07%&	4.07	2	S, W, N, Z	B, D	S	P, R	DAL, SHA, TEP
RWR80#4R12%&	4.12	2	S, W, N, Z	B, D, F	S	P, R	DAL, SHA, TEP
RWR80#4R17%&	4.17	2	S, W, N, Z	B, D	S	P, R	DAL, SHA, TEP
RWR80#4R22%&	4.22	2	S, W, N, Z	B, D, F	S	P, R	DAL, SHA, TEP
RWR80#4R27%&	4.27	2	S, W, N, Z	B, D	S	P, R	DAL, SHA, TEP
RWR80#4R32%&	4.32	2	S, W, N, Z	B, D, F	S	P, R	DAL, SHA, TEP
RWR80#4R37%&	4.37	2	S, W, N, Z	B, D	S	P, R	DAL, SHA, TEP
RWR80#4R42%&	4.42	2	S, W, N, Z	B, D, F	S	P, R	DAL, SHA, TEP
RWR80#4R48%&	4.48	2	S, W, N, Z	B, D	S	P, R	DAL, SHA, TEP
RWR80#4R53%&	4.53	2	S, W, N, Z	B, D, F	S	P, R	DAL, SHA, TEP
RWR80#4R59%&	4.59	2	S, W, N, Z	B, D	S	P, R	DAL, SHA, TEP

RWR80#4R64%&	4.64	2	S, W, N, Z	B, D, F	S	P, R	DAL, SHA, TEP
RWR80#4R70%&	4.70	2	S, W, N, Z	B, D	S	P, R	DAL, SHA, TEP
RWR80#4R75%&	4.75	2	S, W, N, Z	B, D, F	S	P, R	DAL, SHA, TEP
RWR80#4R81%&	4.81	2	S, W, N, Z	B, D	S	P, R	DAL, SHA, TEP
RWR80#4R87%&	4.87	2	S, W, N, Z	B, D, F	S	P, R	DAL, SHA, TEP
RWR80#4R93%&	4.93	2	S, W, N, Z	B, D	S	P, R	DAL, SHA, TEP
RWR80#4R99%&	4.99	2	S, W, N, Z	B, D, F	S	P, R	DAL, SHA, TEP
RWR80#5R05%&	5.05	2	S, W, N, Z	B, D	S	P, R	DAL, SHA, TEP
RWR80#5R11%&	5.11	2	S, W, N, Z	B, D, F	S	P, R	DAL, SHA, TEP
RWR80#5R17%&	5.17	2	S, W, N, Z	B, D	S	P, R	DAL, SHA, TEP
RWR80#5R23%&	5.23	2	S, W, N, Z	B, D, F	S	P, R	DAL, SHA, TEP
RWR80#5R30%&	5.30	2	S, W, N, Z	B, D	S	P, R	DAL, SHA, TEP
RWR80#5R36%&	5.36	2	S, W, N, Z	B, D, F	S	P, R	DAL, SHA, TEP
RWR80#5R42%&	5.42	2	S, W, N, Z	B, D	S	P, R	DAL, SHA, TEP
RWR80#5R49%&	5.49	2	S, W, N, Z	B, D, F	S	P, R	DAL, SHA, TEP
RWR80#5R56%&	5.56	2	S, W, N, Z	B, D	S	P, R	DAL, SHA, TEP
RWR80#5R62%&	5.62	2	S, W, N, Z	B, D, F	S	P, R	DAL, SHA, TEP
RWR80#5R69%&	5.69	2	S, W, N, Z	B, D	S	P, R	DAL, SHA, TEP
RWR80#5R76%&	5.76	2	S, W, N, Z	B, D, F	S	P, R	DAL, SHA, TEP
RWR80#5R83%&	5.83	2	S, W, N, Z	B, D	S	P, R	DAL, SHA, TEP
RWR80#5R90%&	5.90	2	S, W, N, Z	B, D, F	S	P, R	DAL, SHA, TEP
RWR80#5R97%&	5.97	2	S, W, N, Z	B, D	S	P, R	DAL, SHA, TEP
RWR80#6R04%&	6.04	2	S, W, N, Z	B, D, F	S	P, R	DAL, SHA, TEP
RWR80#6R12%&	6.12	2	S, W, N, Z	B, D	S	P, R	DAL, SHA, TEP
RWR80#6R19%&	6.19	2	S, W, N, Z	B, D, F	S	P, R	DAL, SHA, TEP
RWR80#6R26%&	6.26	2	S, W, N, Z	B, D	S	P, R	DAL, SHA, TEP
RWR80#6R34%&	6.34	2	S, W, N, Z	B, D, F	S	P, R	DAL, SHA, TEP
RWR80#6R42%&	6.42	2	S, W, N, Z	B, D	S	P, R	DAL, SHA, TEP
RWR80#6R49%&	6.49	2	S, W, N, Z	B, D, F	S	P, R	DAL, SHA, TEP
RWR80#6R57%&	6.57	2	S, W, N, Z	B, D	S	P, R	DAL, SHA, TEP
RWR80#6R65%&	6.65	2	S, W, N, Z	B, D, F	S	P, R	DAL, SHA, TEP
RWR80#6R73%&	6.73	2	S, W, N, Z	B, D	S	P, R	DAL, SHA, TEP
RWR80#6R81%&	6.81	2	S, W, N, Z	B, D, F	S	P, R	DAL, SHA, TEP
RWR80#6R90%&	6.90	2	S, W, N, Z	B, D	S	P, R	DAL, SHA, TEP
RWR80#6R98%&	6.98	2	S, W, N, Z	B, D, F	S	P, R	DAL, SHA, TEP
RWR80#7R06%&	7.06	2	S, W, N, Z	B, D	S	P, R	DAL, SHA, TEP
RWR80#7R15%&	7.15	2	S, W, N, Z	B, D, F	S	P, R	DAL, SHA, TEP
RWR80#7R23%&	7.23	2	S, W, N, Z	B, D	S	P, R	DAL, SHA, TEP
RWR80#7R32%&	7.32	2	S, W, N, Z	B, D, F	S	P, R	DAL, SHA, TEP
RWR80#7R41%&	7.41	2	S, W, N, Z	B, D	S	P, R	DAL, SHA, TEP
RWR80#7R50%&	7.50	2	S, W, N, Z	B, D, F	S	P, R	DAL, SHA, TEP
RWR80#7R59%&	7.59	2	S, W, N, Z	B, D	S	P, R	DAL, SHA, TEP
RWR80#7R68%&	7.68	2	S, W, N, Z	B, D, F	S	P, R	DAL, SHA, TEP
RWR80#7R77%&	7.77	2	S, W, N, Z	B, D	S	P, R	DAL, SHA, TEP
RWR80#7R87%&	7.87	2	S, W, N, Z	B, D, F	S	P, R	DAL, SHA, TEP
RWR80#7R96%&	7.96	2	S, W, N, Z	B, D	S	P, R	DAL, SHA, TEP
RWR80#8R06%&	8.06	2	S, W, N, Z	B, D, F	S	P, R	DAL, SHA, TEP

RWR80#8R16%&	8.16	2	S, W, N, Z	B, D	S	P, R	DAL, SHA, TEP
RWR80#8R25%&	8.25	2	S, W, N, Z	B, D, F	S	P, R	DAL, SHA, TEP
RWR80#8R35%&	8.35	2	S, W, N, Z	B, D	S	P, R	DAL, SHA, TEP
RWR80#8R45%&	8.45	2	S, W, N, Z	B, D, F	S	P, R	DAL, SHA, TEP
RWR80#8R56%&	8.56	2	S, W, N, Z	B, D	S	P, R	DAL, SHA, TEP
RWR80#8R66%&	8.66	2	S, W, N, Z	B, D, F	S	P, R	DAL, SHA, TEP
RWR80#8R76%&	8.76	2	S, W, N, Z	B, D	S	P, R	DAL, SHA, TEP
RWR80#8R87%&	8.87	2	S, W, N, Z	B, D, F	S	P, R	DAL, SHA, TEP
RWR80#8R98%&	8.98	2	S, W, N, Z	B, D	S	P, R	DAL, SHA, TEP
RWR80#9R09%&	9.09	2	S, W, N, Z	B, D, F	S	P, R	DAL, SHA, TEP
RWR80#9R20%&	9.20	2	S, W, N, Z	B, D	S	P, R	DAL, SHA, TEP
RWR80#9R31%&	9.31	2	S, W, N, Z	B, D, F	S	P, R	DAL, SHA, TEP
RWR80#9R42%&	9.42	2	S, W, N, Z	B, D	S	P, R	DAL, SHA, TEP
RWR80#9R53%&	9.53	2	S, W, N, Z	B, D, F	S	P, R	DAL, SHA, TEP
RWR80#9R65%&	9.65	2	S, W, N, Z	B, D	S	P, R	DAL, SHA, TEP
RWR80#9R76%&	9.76	2	S, W, N, Z	B, D, F	S	P, R	DAL, SHA, TEP
RWR80#9R88%&	9.88	2	S, W, N, Z	B, D	S	P, R	DAL, SHA, TEP
RWR80#10R0%&	10.0	2	S, W, N, Z	B, D, F	S	P, R	DAL, SHA, TEP
RWR80#10R1%&	10.1	2	S, W, N, Z	B, D	S	P, R	DAL, SHA, TEP
RWR80#10R2%&	10.2	2	S, W, N, Z	B, D, F	S	P, R	DAL, SHA, TEP
RWR80#10R4%&	10.4	2	S, W, N, Z	B, D	S	P, R	DAL, SHA, TEP
RWR80#10R5%&	10.5	2	S, W, N, Z	B, D, F	S	P, R	DAL, SHA, TEP
RWR80#10R6%&	10.6	2	S, W, N, Z	B, D	S	P, R	DAL, SHA, TEP
RWR80#10R7%&	10.7	2	S, W, N, Z	B, D, F	S	P, R	DAL, SHA, TEP
RWR80#10R9%&	10.9	2	S, W, N, Z	B, D	S	P, R	DAL, SHA, TEP
RWR80#11R0%&	11.0	2	S, W, N, Z	B, D, F	S	P, R	DAL, SHA, TEP
RWR80#11R1%&	11.1	2	S, W, N, Z	B, D	S	P, R	DAL, SHA, TEP
RWR80#11R3%&	11.3	2	S, W, N, Z	B, D, F	S	P, R	DAL, SHA, TEP
RWR80#11R4%&	11.4	2	S, W, N, Z	B, D	S	P, R	DAL, SHA, TEP
RWR80#11R5%&	11.5	2	S, W, N, Z	B, D, F	S	P, R	DAL, SHA, TEP
RWR80#11R7%&	11.7	2	S, W, N, Z	B, D	S	P, R	DAL, SHA, TEP
RWR80#11R8%&	11.8	2	S, W, N, Z	B, D, F	S	P, R	DAL, SHA, TEP
RWR80#12R0%&	12.0	2	S, W, N, Z	B, D	S	P, R	DAL, SHA, TEP
RWR80#12R1%&	12.1	2	S, W, N, Z	B, D, F	S	P, R	DAL, SHA, TEP
RWR80#12R3%&	12.3	2	S, W, N, Z	B, D	S	P, R	DAL, SHA, TEP
RWR80#12R4%&	12.4	2	S, W, N, Z	B, D, F	S	P, R	DAL, SHA, TEP
RWR80#12R6%&	12.6	2	S, W, N, Z	B, D	S	P, R	DAL, SHA, TEP
RWR80#12R7%&	12.7	2	S, W, N, Z	B, D, F	S	P, R	DAL, SHA, TEP
RWR80#12R9%&	12.9	2	S, W, N, Z	B, D	S	P, R	DAL, SHA, TEP
RWR80#13R0%&	13.0	2	S, W, N, Z	B, D, F	S	P, R	DAL, SHA, TEP
RWR80#13R2%&	13.2	2	S, W, N, Z	B, D	S	P, R	DAL, SHA, TEP
RWR80#13R3%&	13.3	2	S, W, N, Z	B, D, F	S	P, R	DAL, SHA, TEP
RWR80#13R5%&	13.5	2	S, W, N, Z	B, D	S	P, R	DAL, SHA, TEP
RWR80#13R7%&	13.7	2	S, W, N, Z	B, D, F	S	P, R	DAL, SHA, TEP
RWR80#13R8%&	13.8	2	S, W, N, Z	B, D	S	P, R	DAL, SHA, TEP
RWR80#14R0%&	14.0	2	S, W, N, Z	B, D, F	S	P, R	DAL, SHA, TEP
RWR80#14R2%&	14.2	2	S, W, N, Z	B, D	S	P, R	DAL, SHA, TEP

RWR80#14R3%&	14.3	2	S, W, N, Z	B, D, F	S	P, R	DAL, SHA, TEP
RWR80#14R5%&	14.5	2	S, W, N, Z	B, D	S	P, R	DAL, SHA, TEP
RWR80#14R7%&	14.7	2	S, W, N, Z	B, D, F	S	P, R	DAL, SHA, TEP
RWR80#14R9%&	14.9	2	S, W, N, Z	B, D	S	P, R	DAL, SHA, TEP
RWR80#15R0%&	15.0	2	S, W, N, Z	B, D, F	S	P, R	DAL, SHA, TEP
RWR80#15R2%&	15.2	2	S, W, N, Z	B, D	S	P, R	DAL, SHA, TEP
RWR80#15R4%&	15.4	2	S, W, N, Z	B, D, F	S	P, R	DAL, SHA, TEP
RWR80#15R6%&	15.6	2	S, W, N, Z	B, D	S	P, R	DAL, SHA, TEP
RWR80#15R8%&	15.8	2	S, W, N, Z	B, D, F	S	P, R	DAL, SHA, TEP
RWR80#16R0%&	16.0	2	S, W, N, Z	B, D	S	P, R	DAL, SHA, TEP
RWR80#16R2%&	16.2	2	S, W, N, Z	B, D, F	S	P, R	DAL, SHA, TEP
RWR80#16R4%&	16.4	2	S, W, N, Z	B, D	S	P, R	DAL, SHA, TEP
RWR80#16R5%&	16.5	2	S, W, N, Z	B, D, F	S	P, R	DAL, SHA, TEP
RWR80#16R7%&	16.7	2	S, W, N, Z	B, D	S	P, R	DAL, SHA, TEP
RWR80#16R9%&	16.9	2	S, W, N, Z	B, D, F	S	P, R	DAL, SHA, TEP
RWR80#17R2%&	17.2	2	S, W, N, Z	B, D	S	P, R	DAL, SHA, TEP
RWR80#17R4%&	17.4	2	S, W, N, Z	B, D, F	S	P, R	DAL, SHA, TEP
RWR80#17R6%&	17.6	2	S, W, N, Z	B, D	S	P, R	DAL, SHA, TEP
RWR80#17R8%&	17.8	2	S, W, N, Z	B, D, F	S	P, R	DAL, SHA, TEP
RWR80#18R0%&	18.0	2	S, W, N, Z	B, D, F	S	P, R	DAL, SHA, TEP
RWR80#18R2%&	18.2	2	S, W, N, Z	B, D, F	S	P, R	DAL, SHA, TEP
RWR80#18R4%&	18.4	2	S, W, N, Z	B, D	S	P, R	DAL, SHA, TEP
RWR80#18R7%&	18.7	2	S, W, N, Z	B, D, F	S	P, R	DAL, SHA, TEP
RWR80#18R9%&	18.9	2	S, W, N, Z	B, D	S	P, R	DAL, SHA, TEP
RWR80#19R1%&	19.1	2	S, W, N, Z	B, D, F	S	P, R	DAL, SHA, TEP
RWR80#19R3%&	19.3	2	S, W, N, Z	B, D	S	P, R	DAL, SHA, TEP
RWR80#19R6%&	19.6	2	S, W, N, Z	B, D, F	S	P, R	DAL, SHA, TEP
RWR80#19R8%&	19.8	2	S, W, N, Z	B, D	S	P, R	DAL, SHA, TEP
RWR80#20R0%&	20.0	2	S, W, N, Z	B, D, F	S	P, R	DAL, SHA, TEP
RWR80#20R3%&	20.3	2	S, W, N, Z	B, D	S	P, R	DAL, SHA, TEP
RWR80#20R5%&	20.5	2	S, W, N, Z	B, D, F	S	P, R	DAL, SHA, TEP
RWR80#20R8%&	20.8	2	S, W, N, Z	B, D	S	P, R	DAL, SHA, TEP
RWR80#21R0%&	21.0	2	S, W, N, Z	B, D, F	S	P, R	DAL, SHA, TEP
RWR80#21R3%&	21.3	2	S, W, N, Z	B, D	S	P, R	DAL, SHA, TEP
RWR80#21R5%&	21.5	2	S, W, N, Z	B, D, F	S	P, R	DAL, SHA, TEP
RWR80#21R8%&	21.8	2	S, W, N, Z	B, D	S	P, R	DAL, SHA, TEP
RWR80#22R1%&	22.1	2	S, W, N, Z	B, D, F	S	P, R	DAL, SHA, TEP
RWR80#22R3%&	22.3	2	S, W, N, Z	B, D	S	P, R	DAL, SHA, TEP
RWR80#22R6%&	22.6	2	S, W, N, Z	B, D, F	S	P, R	DAL, SHA, TEP
RWR80#22R9%&	22.9	2	S, W, N, Z	B, D	S	P, R	DAL, SHA, TEP
RWR80#23R2%&	23.2	2	S, W, N, Z	B, D, F	S	P, R	DAL, SHA, TEP
RWR80#23R4%&	23.4	2	S, W, N, Z	B, D	S	P, R	DAL, SHA, TEP
RWR80#23R7%&	23.7	2	S, W, N, Z	B, D, F	S	P, R	DAL, SHA, TEP
RWR80#24R0%&	24.0	2	S, W, N, Z	B, D	S	P, R	DAL, SHA, TEP
RWR80#24R3%&	24.3	2	S, W, N, Z	B, D, F	S	P, R	DAL, SHA, TEP
RWR80#24R6%&	24.6	2	S, W, N, Z	B, D	S	P, R	DAL, SHA, TEP
RWR80#24R9%&	24.9	2	S, W, N, Z	B, D, F	S	P, R	DAL, SHA, TEP

RWR80#25R2%&	25.2	2	S, W, N, Z	B, D	S	P, R	DAL, SHA, TEP
RWR80#25R5%&	25.5	2	S, W, N, Z	B, D, F	S	P, R	DAL, SHA, TEP
RWR80#25R8%&	25.8	2	S, W, N, Z	B, D	S	P, R	DAL, SHA, TEP
RWR80#26R1%&	26.1	2	S, W, N, Z	B, D, F	S	P, R	DAL, SHA, TEP
RWR80#26R4%&	26.4	2	S, W, N, Z	B, D	S	P, R	DAL, SHA, TEP
RWR80#26R7%&	26.7	2	S, W, N, Z	B, D, F	S	P, R	DAL, SHA, TEP
RWR80#27R1%&	27.1	2	S, W, N, Z	B, D	S	P, R	DAL, SHA, TEP
RWR80#27R4%&	27.4	2	S, W, N, Z	B, D, F	S	P, R	DAL, SHA, TEP
RWR80#27R7%&	27.7	2	S, W, N, Z	B, D	S	P, R	DAL, SHA, TEP
RWR80#28R0%&	28.0	2	S, W, N, Z	B, D, F	S	P, R	DAL, SHA, TEP
RWR80#28R4%&	28.4	2	S, W, N, Z	B, D	S	P, R	DAL, SHA, TEP
RWR80#28R7%&	28.7	2	S, W, N, Z	B, D, F	S	P, R	DAL, SHA, TEP
RWR80#29R1%&	29.1	2	S, W, N, Z	B, D	S	P, R	DAL, SHA, TEP
RWR80#29R4%&	29.4	2	S, W, N, Z	B, D, F	S	P, R	DAL, SHA, TEP
RWR80#29R8%&	29.8	2	S, W, N, Z	B, D	S	P, R	DAL, SHA, TEP
RWR80#30R1%&	30.1	2	S, W, N, Z	B, D, F	S	P, R	DAL, SHA, TEP
RWR80#30R5%&	30.5	2	S, W, N, Z	B, D	S	P, R	DAL, SHA, TEP
RWR80#30R9%&	30.9	2	S, W, N, Z	B, D, F	S	P, R	DAL, SHA, TEP
RWR80#31R2%&	31.2	2	S, W, N, Z	B, D	S	P, R	DAL, SHA, TEP
RWR80#31R6%&	31.6	2	S, W, N, Z	B, D, F	S	P, R	DAL, SHA, TEP
RWR80#32R0%&	32.0	2	S, W, N, Z	B, D	S	P, R	DAL, SHA, TEP
RWR80#32R4%&	32.4	2	S, W, N, Z	B, D, F	S	P, R	DAL, SHA, TEP
RWR80#32R8%&	32.8	2	S, W, N, Z	B, D	S	P, R	DAL, SHA, TEP
RWR80#33R2%&	33.2	2	S, W, N, Z	B, D, F	S	P, R	DAL, SHA, TEP
RWR80#33R6%&	33.6	2	S, W, N, Z	B, D	S	P, R	DAL, SHA, TEP
RWR80#34R0%&	34.0	2	S, W, N, Z	B, D, F	S	P, R	DAL, SHA, TEP
RWR80#34R4%&	34.4	2	S, W, N, Z	B, D	S	P, R	DAL, SHA, TEP
RWR80#34R8%&	34.8	2	S, W, N, Z	B, D, F	S	P, R	DAL, SHA, TEP
RWR80#35R2%&	35.2	2	S, W, N, Z	B, D	S	P, R	DAL, SHA, TEP
RWR80#35R7%&	35.7	2	S, W, N, Z	B, D, F	S	P, R	DAL, SHA, TEP
RWR80#36R1%&	36.1	2	S, W, N, Z	B, D	S	P, R	DAL, SHA, TEP
RWR80#36R5%&	36.5	2	S, W, N, Z	B, D, F	S	P, R	DAL, SHA, TEP
RWR80#37R0%&	37.0	2	S, W, N, Z	B, D	S	P, R	DAL, SHA, TEP
RWR80#37R4%&	37.4	2	S, W, N, Z	B, D, F	S	P, R	DAL, SHA, TEP
RWR80#37R9%&	37.9	2	S, W, N, Z	B, D	S	P, R	DAL, SHA, TEP
RWR80#38R3%&	38.3	2	S, W, N, Z	B, D, F	S	P, R	DAL, SHA, TEP
RWR80#38R8%&	38.8	2	S, W, N, Z	B, D	S	P, R	DAL, SHA, TEP
RWR80#39R2%&	39.2	2	S, W, N, Z	B, D, F	S	P, R	DAL, SHA, TEP
RWR80#39R7%&	39.7	2	S, W, N, Z	B, D	S	P, R	DAL, SHA, TEP
RWR80#40R2%&	40.2	2	S, W, N, Z	B, D, F	S	P, R	DAL, SHA, TEP
RWR80#40R7%&	40.7	2	S, W, N, Z	B, D	S	P, R	DAL, SHA, TEP
RWR80#41R2%&	41.2	2	S, W, N, Z	B, D, F	S	P, R	DAL, SHA, TEP
RWR80#41R7%&	41.7	2	S, W, N, Z	B, D	S	P, R	DAL, SHA, TEP
RWR80#42R2%&	42.2	2	S, W, N, Z	B, D, F	S	P, R	DAL, SHA, TEP
RWR80#42R7%&	42.7	2	S, W, N, Z	B, D	S	P, R	DAL, SHA, TEP
RWR80#43R2%&	43.2	2	S, W, N, Z	B, D, F	S	P, R	DAL, SHA, TEP
RWR80#43R7%&	43.7	2	S, W, N, Z	B, D	S	P, R	DAL, SHA, TEP

RWR80#44R2%&	44.2	2	S, W, N, Z	B, D, F	S	P, R	DAL, SHA, TEP
RWR80#44R8%&	44.8	2	S, W, N, Z	B, D	S	P, R	DAL, SHA, TEP
RWR80#45R3%&	45.3	2	S, W, N, Z	B, D, F	S	P, R	DAL, SHA, TEP
RWR80#45R9%&	45.9	2	S, W, N, Z	B, D	S	P, R	DAL, SHA, TEP
RWR80#46R4%&	46.4	2	S, W, N, Z	B, D, F	S	P, R	DAL, SHA, TEP
RWR80#47R0%&	47.0	2	S, W, N, Z	B, D	S	P, R	DAL, SHA, TEP
RWR80#47R5%&	47.5	2	S, W, N, Z	B, D, F	S	P, R	DAL, SHA, TEP
RWR80#48R1%&	48.1	2	S, W, N, Z	B, D	S	P, R	DAL, SHA, TEP
RWR80#48R7%&	48.7	2	S, W, N, Z	B, D, F	S	P, R	DAL, SHA, TEP
RWR80#49R3%&	49.3	2	S, W, N, Z	B, D	S	P, R	DAL, SHA, TEP
RWR80#49R9%&	49.9	2	S, W, N, Z	B, D, F	S	P, R	DAL, SHA, TEP
RWR80#50R5%&	50.5	2	S, W, N, Z	B, D	S	P, R	DAL, SHA, TEP
RWR80#51R1%&	51.1	2	S, W, N, Z	B, D, F	S	P, R	DAL, SHA, TEP
RWR80#51R7%&	51.7	2	S, W, N, Z	B, D	S	P, R	DAL, SHA, TEP
RWR80#52R3%&	52.3	2	S, W, N, Z	B, D, F	S	P, R	DAL, SHA, TEP
RWR80#53R0%&	53.0	2	S, W, N, Z	B, D	S	P, R	DAL, SHA, TEP
RWR80#53R6%&	53.6	2	S, W, N, Z	B, D, F	S	P, R	DAL, SHA, TEP
RWR80#54R2%&	54.2	2	S, W, N, Z	B, D	S	P, R	DAL, SHA, TEP
RWR80#54R9%&	54.9	2	S, W, N, Z	B, D, F	S	P, R	DAL, SHA, TEP
RWR80#55R6%&	55.6	2	S, W, N, Z	B, D	S	P, R	DAL, SHA, TEP
RWR80#56R2%&	56.2	2	S, W, N, Z	B, D, F	S	P, R	DAL, SHA, TEP
RWR80#56R9%&	56.9	2	S, W, N, Z	B, D	S	P, R	DAL, SHA, TEP
RWR80#57R6%&	57.6	2	S, W, N, Z	B, D, F	S	P, R	DAL, SHA, TEP
RWR80#58R3%&	58.3	2	S, W, N, Z	B, D	S	P, R	DAL, SHA, TEP
RWR80#59R0%&	59.0	2	S, W, N, Z	B, D, F	S	P, R	DAL, SHA, TEP
RWR80#59R7%&	59.7	2	S, W, N, Z	B, D	S	P, R	DAL, SHA, TEP
RWR80#60R4%&	60.4	2	S, W, N, Z	B, D, F	S	P, R	DAL, SHA, TEP
RWR80#61R2%&	61.2	2	S, W, N, Z	B, D	S	P, R	DAL, SHA, TEP
RWR80#61R9%&	61.9	2	S, W, N, Z	B, D, F	S	P, R	DAL, SHA, TEP
RWR80#62R6%&	62.6	2	S, W, N, Z	B, D	S	P, R	DAL, SHA, TEP
RWR80#63R4%&	63.4	2	S, W, N, Z	B, D, F	S	P, R	DAL, SHA, TEP
RWR80#64R2%&	64.2	2	S, W, N, Z	B, D	S	P, R	DAL, SHA, TEP
RWR80#64R9%&	64.9	2	S, W, N, Z	B, D, F	S	P, R	DAL, SHA, TEP
RWR80#65R7%&	65.7	2	S, W, N, Z	B, D	S	P, R	DAL, SHA, TEP
RWR80#66R5%&	66.5	2	S, W, N, Z	B, D, F	S	P, R	DAL, SHA, TEP
RWR80#67R3%&	67.3	2	S, W, N, Z	B, D	S	P, R	DAL, SHA, TEP
RWR80#68R1%&	68.1	2	S, W, N, Z	B, D, F	S	P, R	DAL, SHA, TEP
RWR80#69R0%&	69.0	2	S, W, N, Z	B, D	S	P, R	DAL, SHA, TEP
RWR80#69R8%&	69.8	2	S, W, N, Z	B, D, F	S	P, R	DAL, SHA, TEP
RWR80#70R6%&	70.6	2	S, W, N, Z	B, D	S	P, R	DAL, SHA, TEP
RWR80#71R5%&	71.5	2	S, W, N, Z	B, D, F	S	P, R	DAL, SHA, TEP
RWR80#72R3%&	72.3	2	S, W, N, Z	B, D	S	P, R	DAL, SHA, TEP
RWR80#73R2%&	73.2	2	S, W, N, Z	B, D, F	S	P, R	DAL, SHA, TEP
RWR80#74R1%&	74.1	2	S, W, N, Z	B, D	S	P, R	DAL, SHA, TEP
RWR80#75R0%&	75.0	2	S, W, N, Z	B, D, F	S	P, R	DAL, SHA, TEP
RWR80#75R9%&	75.9	2	S, W, N, Z	B, D	S	P, R	DAL, SHA, TEP
RWR80#76R8%&.	76.8	2	S, W, N, Z	B, D, F	S	P, R	DAL, SHA, TEP

RWR80#77R7%&.	77.7	2	S, W, N, Z	B, D	S	P, R	DAL, SHA, TEP
RWR80#78R7%&	78.7	2	S, W, N, Z	B, D, F	S	P, R	DAL, SHA, TEP
RWR80#79R6%&	79.6	2	S, W, N, Z	B, D	S	P, R	DAL, SHA, TEP
RWR80#80R6%&	80.6	2	S, W, N, Z	B, D, F	S	P, R	DAL, SHA, TEP
RWR80#81R6%&	81.6	2	S, W, N, Z	B, D	S	P, R	DAL, SHA, TEP
RWR80#82R5%&	82.5	2	S, W, N, Z	B, D, F	S	P, R	DAL, SHA, TEP
RWR80#83R5%&	83.5	2	S, W, N, Z	B, D	S	P, R	DAL, SHA, TEP
RWR80#84R5%&	84.5	2	S, W, N, Z	B, D, F	S	P, R	DAL, SHA, TEP
RWR80#85R6%&	85.6	2	S, W, N, Z	B, D	S	P, R	DAL, SHA, TEP
RWR80#86R6%&	86.6	2	S, W, N, Z	B, D, F	S	P, R	DAL, SHA, TEP
RWR80#87R6%&	87.6	2	S, W, N, Z	B, D	S	P, R	DAL, SHA, TEP
RWR80#88R7%&	88.7	2	S, W, N, Z	B, D, F	S	P, R	DAL, SHA, TEP
RWR80#89R8%&	89.8	2	S, W, N, Z	B, D	S	P, R	DAL, SHA, TEP
RWR80#90R9%&	90.9	2	S, W, N, Z	B, D, F	S	P, R	DAL, SHA, TEP
RWR80#92R0%&	92.0	2	S, W, N, Z	B, D	S	P, R	DAL, SHA, TEP
RWR80#93R1%&	93.1	2	S, W, N, Z	B, D, F	S	P, R	DAL, SHA, TEP
RWR80#94R2%&	94.2	2	S, W, N, Z	B, D	S	P, R	DAL, SHA, TEP
RWR80#95R3%&	95.3	2	S, W, N, Z	B, D, F	S	P, R	DAL, SHA, TEP
RWR80#96R5%&	96.5	2	S, W, N, Z	B, D	S	P, R	DAL, SHA, TEP
RWR80#97R6%&	97.6	2	S, W, N, Z	B, D, F	S	P, R	DAL, SHA, TEP
RWR80#98R8%&	98.8	2	S, W, N, Z	B, D	S	P, R	DAL, SHA, TEP
RWR80#1000%&	100	2	S, W, N, Z	B, D, F	S	P, R	DAL, SHA, TEP
RWR80#1010%&	101	2	S, W, N, Z	B, D	S	P, R	DAL, SHA, TEP
RWR80#1020%&	102	2	S, W, N, Z	B, D, F	S	P, R	DAL, SHA, TEP
RWR80#1040%&	104	2	S, W, N, Z	B, D	S	P, R	DAL, SHA, TEP
RWR80#1050%&	105	2	S, W, N, Z	B, D, F	S	P, R	DAL, SHA, TEP
RWR80#1060%&	106	2	S, W, N, Z	B, D	S	P, R	DAL, SHA, TEP
RWR80#1070%&	107	2	S, W, N, Z	B, D, F	S	P, R	DAL, SHA, TEP
RWR80#1090%&	109	2	S, W, N, Z	B, D	S	P, R	DAL, SHA, TEP
RWR80#1100%&	110	2	S, W, N, Z	B, D, F	S	P, R	DAL, SHA, TEP
RWR80#1110%&	111	2	S, W, N, Z	B, D	S	P, R	DAL, SHA, TEP
RWR80#1130%&	113	2	S, W, N, Z	B, D, F	S	P, R	DAL, SHA, TEP
RWR80#1140%&	114	2	S, W, N, Z	B, D	S	P, R	DAL, SHA, TEP
RWR80#1150%&	115	2	S, W, N, Z	B, D, F	S	P, R	DAL, SHA, TEP
RWR80#1170%&	117	2	S, W, N, Z	B, D	S	P, R	DAL, SHA, TEP
RWR80#1180%&	118	2	S, W, N, Z	B, D, F	S	P, R	DAL, SHA, TEP
RWR80#1200%&	120	2	S, W, N, Z	B, D	S	P, R	DAL, SHA, TEP
RWR80#1210%&	121	2	S, W, N, Z	B, D, F	S	P, R	DAL, SHA, TEP
RWR80#1230%&	123	2	S, W, N, Z	B, D	S	P, R	DAL, SHA, TEP
RWR80#1240%&	124	2	S, W, N, Z	B, D, F	S	P, R	DAL, SHA, TEP
RWR80#1260%&	126	2	S, W, N, Z	B, D	S	P, R	DAL, SHA, TEP
RWR80#1270%&	127	2	S, W, N, Z	B, D, F	S	P, R	DAL, SHA, TEP
RWR80#1290%&	129	2	S, W, N, Z	B, D	S	P, R	DAL, SHA, TEP
RWR80#1300%&	130	2	S, W, N, Z	B, D, F	S	P, R	DAL, SHA, TEP
RWR80#1320%&	132	2	S, W, N, Z	B, D	S	P, R	DAL, SHA, TEP
RWR80#1330%&	133	2	S, W, N, Z	B, D, F	S	P, R	DAL, SHA, TEP
RWR80#1350%&	135	2	S, W, N, Z	B, D	S	P, R	DAL, SHA, TEP

RWR80#1370%&	137	2	S, W, N, Z	B, D, F	S	P, R	DAL, SHA, TEP
RWR80#1380%&	138	2	S, W, N, Z	B, D	S	P, R	DAL, SHA, TEP
RWR80#1400%&	140	2	S, W, N, Z	B, D, F	S	P, R	DAL, SHA, TEP
RWR80#1420%&	142	2	S, W, N, Z	B, D	S	P, R	DAL, SHA, TEP
RWR80#1430%&	143	2	S, W, N, Z	B, D, F	S	P, R	DAL, SHA, TEP
RWR80#1450%&	145	2	S, W, N, Z	B, D	S	P, R	DAL, SHA, TEP
RWR80#1470%&	147	2	S, W, N, Z	B, D, F	S	P, R	DAL, SHA, TEP
RWR80#1490%&	149	2	S, W, N, Z	B, D	S	P, R	DAL, SHA, TEP
RWR80#1500%&	150	2	S, W, N, Z	B, D, F	S	P, R	DAL, SHA, TEP
RWR80#1520%&	152	2	S, W, N, Z	B, D	S	P, R	DAL, SHA, TEP
RWR80#1540%&	154	2	S, W, N, Z	B, D, F	S	P, R	DAL, SHA, TEP
RWR80#1560%&	156	2	S, W, N, Z	B, D	S	P, R	DAL, SHA, TEP
RWR80#1580%&	158	2	S, W, N, Z	B, D, F	S	P, R	DAL, SHA, TEP
RWR80#1600%&	160	2	S, W, N, Z	B, D	S	P, R	DAL, SHA, TEP
RWR80#1620%&	162	2	S, W, N, Z	B, D, F	S	P, R	DAL, SHA, TEP
RWR80#1640%&	164	2	S, W, N, Z	B, D	S	P, R	DAL, SHA, TEP
RWR80#1650%&	165	2	S, W, N, Z	B, D, F	S	P, R	DAL, SHA, TEP
RWR80#1670%&	167	2	S, W, N, Z	B, D	S	P, R	DAL, SHA, TEP
RWR80#1690%&	169	2	S, W, N, Z	B, D, F	S	P, R	DAL, SHA, TEP
RWR80#1720%&	172	2	S, W, N, Z	B, D	S	P, R	DAL, SHA, TEP
RWR80#1740%&	174	2	S, W, N, Z	B, D, F	S	P, R	DAL, SHA, TEP
RWR80#1760%&	176	2	S, W, N, Z	B, D	S	P, R	DAL, SHA, TEP
RWR80#1780%&	178	2	S, W, N, Z	B, D, F	S	P, R	DAL, SHA, TEP
RWR80#1800%&	180	2	S, W, N, Z	B, D, F	S	P, R	DAL, SHA, TEP
RWR80#1820%&	182	2	S, W, N, Z	B, D, F	S	P, R	DAL, SHA, TEP
RWR80#1840%&	184	2	S, W, N, Z	B, D	S	P, R	DAL, SHA, TEP
RWR80#1870%&	187	2	S, W, N, Z	B, D, F	S	P, R	DAL, SHA, TEP
RWR80#1890%&	189	2	S, W, N, Z	B, D	S	P, R	DAL, SHA, TEP
RWR80#1910%&	191	2	S, W, N, Z	B, D, F	S	P, R	DAL, SHA, TEP
RWR80#1930%&	193	2	S, W, N, Z	B, D	S	P, R	DAL, SHA, TEP
RWR80#1960%&	196	2	S, W, N, Z	B, D, F	S	P, R	DAL, SHA, TEP
RWR80#1980%&	198	2	S, W, N, Z	B, D	S	P, R	DAL, SHA, TEP
RWR80#2000%&	200	2	S, W, N, Z	B, D, F	S	P, R	DAL, SHA, TEP
RWR80#2030%&	203	2	S, W, N, Z	B, D	S	P, R	DAL, SHA, TEP
RWR80#2050%&	205	2	S, W, N, Z	B, D, F	S	P, R	DAL, SHA, TEP
RWR80#2080%&	208	2	S, W, N, Z	B, D	S	P, R	DAL, SHA, TEP
RWR80#2100%&	210	2	S, W, N, Z	B, D, F	S	P, R	DAL, SHA, TEP
RWR80#2130%&	213	2	S, W, N, Z	B, D	S	P, R	DAL, SHA, TEP
RWR80#2150%&	215	2	S, W, N, Z	B, D, F	S	P, R	DAL, SHA, TEP
RWR80#2180%&	218	2	S, W, N, Z	B, D	S	P, R	DAL, SHA, TEP
RWR80#2210%&	221	2	S, W, N, Z	B, D, F	S	P, R	DAL, SHA, TEP
RWR80#2230%&	223	2	S, W, N, Z	B, D	S	P, R	DAL, SHA, TEP
RWR80#2260%&	226	2	S, W, N, Z	B, D, F	S	P, R	DAL, SHA, TEP
RWR80#2290%&	229	2	S, W, N, Z	B, D	S	P, R	DAL, SHA, TEP
RWR80#2320%&	232	2	S, W, N, Z	B, D, F	S	P, R	DAL, SHA, TEP
RWR80#2340%&	234	2	S, W, N, Z	B, D	S	P, R	DAL, SHA, TEP
RWR80#2370%&	237	2	S, W, N, Z	B, D, F	S	P, R	DAL, SHA, TEP

RWR80#2400%&	240	2	S, W, N, Z	B, D	S	P, R	DAL, SHA, TEP
RWR80#2430%&	243	2	S, W, N, Z	B, D, F	S	P, R	DAL, SHA, TEP
RWR80#2460%&	246	2	S, W, N, Z	B, D	S	P, R	DAL, SHA, TEP
RWR80#2490%&	249	2	S, W, N, Z	B, D, F	S	P, R	DAL, SHA, TEP
RWR80#2520%&	252	2	S, W, N, Z	B, D	S	P, R	DAL, SHA, TEP
RWR80#2550%&	255	2	S, W, N, Z	B, D, F	S	P, R	DAL, SHA, TEP
RWR80#2580%&	258	2	S, W, N, Z	B, D	S	P, R	DAL, SHA, TEP
RWR80#2610%&	261	2	S, W, N, Z	B, D, F	S	P, R	DAL, SHA, TEP
RWR80#2640%&	264	2	S, W, N, Z	B, D	S	P, R	DAL, SHA, TEP
RWR80#2670%&	267	2	S, W, N, Z	B, D, F	S	P, R	DAL, SHA, TEP
RWR80#2710%&	271	2	S, W, N, Z	B, D	S	P, R	DAL, SHA, TEP
RWR80#2740%&	274	2	S, W, N, Z	B, D, F	S	P, R	DAL, SHA, TEP
RWR80#2770%&	277	2	S, W, N, Z	B, D	S	P, R	DAL, SHA, TEP
RWR80#2800%&	280	2	S, W, N, Z	B, D, F	S	P, R	DAL, SHA, TEP
RWR80#2840%&	284	2	S, W, N, Z	B, D	S	P, R	DAL, SHA, TEP
RWR80#2870%&	287	2	S, W, N, Z	B, D, F	S	P, R	DAL, SHA, TEP
RWR80#2910%&	291	2	S, W, N, Z	B, D	S	P, R	DAL, SHA, TEP
RWR80#2940%&	294	2	S, W, N, Z	B, D, F	S	P, R	DAL, SHA, TEP
RWR80#2980%&	298	2	S, W, N, Z	B, D	S	P, R	DAL, SHA, TEP
RWR80#3010%&	301	2	S, W, N, Z	B, D, F	S	P, R	DAL, SHA, TEP
RWR80#3050%&	305	2	S, W, N, Z	B, D	S	P, R	DAL, SHA, TEP
RWR80#3090%&	309	2	S, W, N, Z	B, D, F	S	P, R	DAL, SHA, TEP
RWR80#3120%&	312	2	S, W, N, Z	B, D	S	P, R	DAL, SHA, TEP
RWR80#3160%&	316	2	S, W, N, Z	B, D, F	S	P, R	DAL, SHA, TEP
RWR80#3200%&	320	2	S, W, N, Z	B, D	S	P, R	DAL, SHA, TEP
RWR80#3240%&	324	2	S, W, N, Z	B, D, F	S	P, R	DAL, SHA, TEP
RWR80#3280%&	328	2	S, W, N, Z	B, D	S	P, R	DAL, SHA, TEP
RWR80#3320%&	332	2	S, W, N, Z	B, D, F	S	P, R	DAL, SHA, TEP
RWR80#3360%&	336	2	S, W, N, Z	B, D	S	P, R	DAL, SHA, TEP
RWR80#3400%&	340	2	S, W, N, Z	B, D, F	S	P, R	DAL, SHA, TEP
RWR80#3440%&	344	2	S, W, N, Z	B, D	S	P, R	DAL, SHA, TEP
RWR80#3480%&	348	2	S, W, N, Z	B, D, F	S	P, R	DAL, SHA, TEP
RWR80#3520%&	352	2	S, W, N, Z	B, D	S	P, R	DAL, SHA, TEP
RWR80#3570%&	357	2	S, W, N, Z	B, D, F	S	P, R	DAL, SHA, TEP
RWR80#3610%&	361	2	S, W, N, Z	B, D	S	P, R	DAL, SHA, TEP
RWR80#3650%&	365	2	S, W, N, Z	B, D, F	S	P, R	DAL, SHA, TEP
RWR80#3700%&	370	2	S, W, N, Z	B, D	S	P, R	DAL, SHA, TEP
RWR80#3740%&	374	2	S, W, N, Z	B, D, F	S	P, R	DAL, SHA, TEP
RWR80#3790%&	379	2	S, W, N, Z	B, D	S	P, R	DAL, SHA, TEP
RWR80#3830%&	383	2	S, W, N, Z	B, D, F	S	P, R	DAL, SHA, TEP
RWR80#3880%&	388	2	S, W, N, Z	B, D	S	P, R	DAL, SHA, TEP
RWR80#3920%&	392	2	S, W, N, Z	B, D, F	S	P, R	DAL, SHA, TEP
RWR80#3970%&	397	2	S, W, N, Z	B, D	S	P, R	DAL, SHA, TEP
RWR80#4020%&	402	2	S, W, N, Z	B, D, F	S	P, R	DAL, SHA, TEP
RWR80#4070%&	407	2	S, W, N, Z	B, D	S	P, R	DAL, SHA, TEP
RWR80#4120%&	412	2	S, W, N, Z	B, D, F	S	P, R	DAL, SHA, TEP
RWR80#4170%&	417	2	S, W, N, Z	B, D	S	P, R	DAL, SHA, TEP

RWR80#4220%&	422	2	S, W, N, Z	B, D, F	S	P, R	DAL, SHA, TEP
RWR80#4270%&	427	2	S, W, N, Z	B, D	S	P, R	DAL, SHA, TEP
RWR80#4320%&	432	2	S, W, N, Z	B, D, F	S	P, R	DAL, SHA, TEP
RWR80#4370%&	437	2	S, W, N, Z	B, D	S	P, R	DAL, SHA, TEP
RWR80#4420%&	442	2	S, W, N, Z	B, D, F	S	P, R	DAL, SHA, TEP
RWR80#4480%&	448	2	S, W, N, Z	B, D	S	P, R	DAL, SHA, TEP
RWR80#4530%&	453	2	S, W, N, Z	B, D, F	S	P, R	DAL, SHA, TEP
RWR80#4590%&	459	2	S, W, N, Z	B, D	S	P, R	DAL, SHA, TEP
RWR80#4640%&	464	2	S, W, N, Z	B, D, F	S	P, R	DAL, SHA, TEP
RWR80#4700%&	470	2	S, W, N, Z	B, D	S	P, R	DAL, SHA, TEP
RWR80#4750%&	475	2	S, W, N, Z	B, D, F	S	P, R	DAL, SHA, TEP
RWR80#4810%&	481	2	S, W, N, Z	B, D	S	P, R	DAL, SHA, TEP
RWR80#4870%&	487	2	S, W, N, Z	B, D, F	S	P, R	DAL, SHA, TEP
RWR80#4930%&	493	2	S, W, N, Z	B, D	S	P, R	DAL, SHA, TEP
RWR80#4990%&	499	2	S, W, N, Z	B, D, F	S	P, R	DAL, SHA, TEP
RWR80#5050%&	505	2	S, W, N, Z	B, D	S	P, R	DAL, SHA, TEP
RWR80#5110%&	511	2	S, W, N, Z	B, D, F	S	P, R	DAL, SHA, TEP
RWR80#5170%&	517	2	S, W, N, Z	B, D	S	P, R	DAL, SHA, TEP
RWR80#5230%&	523	2	S, W, N, Z	B, D, F	S	P, R	DAL, SHA, TEP
RWR80#5300%&	530	2	S, W, N, Z	B, D	S	P, R	DAL, SHA, TEP
RWR80#5360%&	536	2	S, W, N, Z	B, D, F	S	P, R	DAL, SHA, TEP
RWR80#5420%&	542	2	S, W, N, Z	B, D	S	P, R	DAL, SHA, TEP
RWR80#5490%&	549	2	S, W, N, Z	B, D, F	S	P, R	DAL, SHA, TEP
RWR80#5560%&	556	2	S, W, N, Z	B, D	S	P, R	DAL, SHA, TEP
RWR80#5620%&	562	2	S, W, N, Z	B, D, F	S	P, R	DAL, SHA, TEP
RWR80#5690%&	569	2	S, W, N, Z	B, D	S	P, R	DAL, SHA, TEP
RWR80#5760%&	576	2	S, W, N, Z	B, D, F	S	P, R	DAL, SHA, TEP
RWR80#5830%&	583	2	S, W, N, Z	B, D	S	P, R	DAL, SHA, TEP
RWR80#5900%&	590	2	S, W, N, Z	B, D, F	S	P, R	DAL, SHA, TEP
RWR80#5970%&	597	2	S, W, N, Z	B, D	S	P, R	DAL, SHA, TEP
RWR80#6040%&	604	2	S, W, N, Z	B, D, F	S	P, R	DAL, SHA, TEP
RWR80#6120%&	612	2	S, W, N, Z	B, D	S	P, R	DAL, SHA, TEP
RWR80#6190%&	619	2	S, W, N, Z	B, D, F	S	P, R	DAL, SHA, TEP
RWR80#6260%&	626	2	S, W, N, Z	B, D	S	P, R	DAL, SHA, TEP
RWR80#6340%&	634	2	S, W, N, Z	B, D, F	S	P, R	DAL, SHA, TEP
RWR80#6420%&	642	2	S, W, N, Z	B, D	S	P, R	DAL, SHA, TEP
RWR80#6490%&	649	2	S, W	B, D, F	S	P, R	DAL, SHA, TEP
RWR80#6570%&	657	2	S, W	B, D	S	P, R	DAL, SHA, TEP
RWR80#6650%&	665	2	S, W	B, D, F	S	P, R	DAL, SHA, TEP
RWR80#6730%&	673	2	S, W	B, D	S	P, R	DAL, SHA, TEP
RWR80#6810%&	681	2	S, W	B, D, F	S	P, R	DAL, SHA, TEP
RWR80#6900%&	690	2	S, W	B, D	S	P, R	DAL, SHA, TEP
RWR80#6980%&	698	2	S, W	B, D, F	S	P, R	DAL, SHA, TEP
RWR80#7060%&	706	2	S, W	B, D	S	P, R	DAL, SHA, TEP
RWR80#7150%&	715	2	S, W	B, D, F	S	P, R	DAL, SHA, TEP
RWR80#7230%&	723	2	S, W	B, D	S	P, R	DAL, SHA, TEP
RWR80#7320%&	732	2	S, W	B, D, F	S	P, R	DAL, SHA, TEP

RWR80#7410%&	741	2	S, W	B, D	S	P, R	DAL, SHA, TEP
RWR80#7500%&	750	2	S, W	B, D, F	S	P, R	DAL, SHA, TEP
RWR80#7590%&	759	2	S, W	B, D	S	P, R	DAL, SHA, TEP
RWR80#7680%&	768	2	S, W	B, D, F	S	P, R	DAL, SHA, TEP
RWR80#7770%&	777	2	S, W	B, D	S	P, R	DAL, SHA, TEP
RWR80#7870%&	787	2	S, W	B, D, F	S	P, R	DAL, SHA, TEP
RWR80#7960%&	796	2	S, W	B, D	S	P, R	DAL, SHA, TEP
RWR80#8060%&	806	2	S, W	B, D, F	S	P, R	DAL, SHA, TEP
RWR80#8160%&	816	2	S, W	B, D	S	P, R	DAL, SHA, TEP
RWR80#8250%&	825	2	S, W	B, D, F	S	P, R	DAL, SHA, TEP
RWR80#8350%&	835	2	S, W	B, D	S	P, R	DAL, SHA, TEP
RWR80#8450%&	845	2	S, W	B, D, F	S	P, R	DAL, SHA, TEP
RWR80#8560%&	856	2	S, W	B, D	S	P, R	DAL, SHA, TEP
RWR80#8660%&	866	2	S, W	B, D, F	S	P, R	DAL, SHA, TEP
RWR80#8760%&	876	2	S, W	B, D	S	P, R	DAL, SHA, TEP
RWR80#8870%&	887	2	S, W	B, D, F	S	P, R	DAL, SHA, TEP
RWR80#8980%&	898	2	S, W	B, D	S	P, R	DAL, SHA, TEP
RWR80#9090%&	909	2	S, W	B, D, F	S	P, R	DAL, SHA, TEP
RWR80#9200%&	920	2	S, W	B, D	S	P, R	DAL, SHA, TEP
RWR80#9310%&	931	2	S, W	B, D, F	S	P, R	DAL, SHA, TEP
RWR80#9420%&	942	2	S, W	B, D	S	P, R	DAL, SHA, TEP
RWR80#9530%&	953	2	S, W	B, D, F	S	P, R	DAL, SHA, TEP
RWR80#9650%&	965	2	S, W	B, D	S	P, R	DAL, SHA, TEP
RWR80#9760%&	976	2	S, W	B, D, F	S	P, R	DAL, SHA, TEP
RWR80#9880%&	988	2	S, W	B, D	S	P, R	DAL, SHA, TEP
RWR80#1001%&	1000	2	S, W	B, D, F	S	P, R	DAL, SHA, TEP
RWR80#1011%&	1010	2	S, W	B, D	S	P, R	DAL, SHA, TEP
RWR80#1021%&	1020	2	S, W	B, D, F	S	P, R	DAL, SHA, TEP
RWR80#1041%&	1040	2	S, W	B, D	S	P, R	DAL, SHA, TEP
RWR80#1051%&	1050	2	S, W	B, D, F	S	P, R	DAL, SHA, TEP
RWR80#1061%&	1060	2	S, W	B, D	S	P, R	DAL, SHA, TEP
RWR80#1071%&	1070	2	S, W	B, D, F	S	P, R	DAL, SHA, TEP
RWR80#1091%&	1090	2	S, W	B, D	S	P, R	DAL, SHA, TEP
RWR80#1101%&	1100	2	S, W	B, D, F	S	P, R	DAL, SHA, TEP
RWR80#1111%&	1110	2	S, W	B, D	S	P, R	DAL, SHA, TEP
RWR80#1131%&	1130	2	S, W	B, D, F	S	P, R	DAL, SHA, TEP
RWR80#1141%&	1140	2	S, W	B, D	S	P, R	DAL, SHA, TEP
RWR80#1151%&	1150	2	S, W	B, D, F	S	P, R	DAL, SHA, TEP
RWR80#1171%&	1170	2	S, W	B, D	S	P, R	DAL, SHA, TEP
RWR80#1181%&	1180	2	S, W	B, D, F	S	P, R	DAL, SHA, TEP
RWR80#1201%&	1200	2	S, W	B, D	S	P, R	DAL, SHA, TEP
RWR80#1211%&	1210	2	S, W	B, D, F	S	P, R	DAL, SHA, TEP

RWR80 RESISTORS DECADE BREAKDOWN

Click on the link below to see the associated parts selection listing:

Resistance Range
0.1 Ohms through 0.988 Ohms
1.00 Ohms through 9.88 Ohms
10.0 Ohms through 98.8 Ohms
100 Ohms through 988 Ohms
1000 Ohms through 1210 Ohms

RWR80 Wirewound Resistors: 0.100 Ohms through 0.988 Ohms

	Resistance	Power	Terminal	Resistance	Level 1	Level 2	
Part Number	Value (Ohms)	Rating (W)	Characteristic (#)	Tolerance (%)	(FRL)(&)	(FRL)(&)	Manufacturer
RWR80#R100%&	0.100	2	S, W, N, Z	B, D, F	S	P, R	DAL, SHA, TEP
RWR80#R101%&	0.101	2	S, W, N, Z	B, D	S	P, R	DAL, SHA, TEP
RWR80#R102%&	0.102	2	S, W, N, Z	B, D, F	S	P, R	DAL, SHA, TEP
RWR80#R104%&	0.104	2	S, W, N, Z	B, D	S	P, R	DAL, SHA, TEP
RWR80#R105%&	0.105	2	S, W, N, Z	B, D, F	S	P, R	DAL, SHA, TEP
RWR80#R106%&	0.106	2	S, W, N, Z	B, D	S	P, R	DAL, SHA, TEP
RWR80#R107%&	0.107	2	S, W, N, Z	B, D, F	S	P, R	DAL, SHA, TEP
RWR80#R109%&	0.109	2	S, W, N, Z	B, D	S	P, R	DAL, SHA, TEP
	Resistance	Power	Terminal	Resistance	Level 1	Level 2	
Part Number	Value (Ohms)	Rating (W)	Characteristic (#)	Tolerance (%)	(FRL)(&)	(FRL)(&)	Manufacturer
RWR80#R110%&	0.110	2	S, W, N, Z	B, D, F	S	P, R	DAL, SHA, TEP
RWR80#R111%&	0.111	2	S, W, N, Z	B, D	S	P, R	DAL, SHA, TEP
RWR80#R113%&	0.113	2	S, W, N, Z	B, D, F	S	P, R	DAL, SHA, TEP
RWR80#R114%&	0.114	2	S, W, N, Z	B, D	S	P, R	DAL, SHA, TEP
RWR80#R115%&	0.115	2	S, W, N, Z	B, D, F	S	P, R	DAL, SHA, TEP
RWR80#R117%&	0.117	2	S, W, N, Z	B, D	S	P, R	DAL, SHA, TEP
RWR80#R118%&	0.118	2	S, W, N, Z	B, D, F	S	P, R	DAL, SHA, TEP
RWR80#R120%&	0.120	2	S, W, N, Z	B, D	S	P, R	DAL, SHA, TEP
RWR80#R121%&	0.121	2	S, W, N, Z	B, D, F	S	P, R	DAL, SHA, TEP
RWR80#R123%&	0.123	2	S, W, N, Z	B, D	S	P, R	DAL, SHA, TEP
RWR80#R124%&	0.124	2	S, W, N, Z	B, D, F	S	P, R	DAL, SHA, TEP
RWR80#R126%&	0.126	2	S, W, N, Z	B, D	S	P, R	DAL, SHA, TEP
RWR80#R127%&	0.127	2	S, W, N, Z	B, D, F	S	P, R	DAL, SHA, TEP
RWR80#R129%&	0.129	2	S, W, N, Z	B, D	S	P, R	DAL, SHA, TEP
	Resistance	Power	Terminal	Resistance	Level 1	Level 2	
Part Number	Value (Ohms)	Rating (W)	Characteristic (#)	Tolerance (%)	(FRL)(&)	(FRL)(&)	Manufacturer
RWR80#R130%&	0.130	2	S, W, N, Z	B, D, F	S	P, R	DAL, SHA, TEP
RWR80#R132%&	0.132	2	S, W, N, Z	B, D	S	P, R	DAL, SHA, TEP
RWR80#R133%&	0.133	2	S, W, N, Z	B, D, F	S	P, R	DAL, SHA, TEP
RWR80#R135%&	0.135	2	S, W, N, Z	B, D	S	P, R	DAL, SHA, TEP
RWR80#R137%&	0.137	2	S, W, N, Z	B, D, F	S	P, R	DAL, SHA, TEP
RWR80#R138%&	0.138	2	S, W, N, Z	B, D	S	P, R	DAL, SHA, TEP
RWR80#R140%&	0.140	2	S, W, N, Z	B, D, F	S	P, R	DAL, SHA, TEP

RWR80#R142%&	0.142	2	S, W, N, Z	B, D	S	P, R	DAL, SHA, TEP
RWR80#R143%&	0.143	2	S, W, N, Z	B, D, F	S	P, R	DAL, SHA, TEP
RWR80#R145%&	0.145	2	S, W, N, Z	B, D	S	P, R	DAL, SHA, TEP
RWR80#R147%&	0.147	2	S, W, N, Z	B, D, F	S	P, R	DAL, SHA, TEP
RWR80#R149%&	0.149	2	S, W, N, Z	B, D	S	P, R	DAL, SHA, TEP
RWR80#R150%&	0.150	2	S, W, N, Z	B, D, F	S	P, R	DAL, SHA, TEP
RWR80#R152%&	0.152	2	S, W, N, Z	B, D	S	P, R	DAL, SHA, TEP
	Resistance	Power	Terminal	Resistance	Level 1	Level 2	
Part Number	Value (Ohms)	Rating (W)	Characteristic (#)	Tolerance (%)	(FRL)(&)	(FRL)(&)	Manufacturer
RWR80#R154%&	0.154	2	S, W, N, Z	B, D, F	S	P, R	DAL, SHA, TEP
RWR80#R156%&	0.156	2	S, W, N, Z	B, D	S	P, R	DAL, SHA, TEP
RWR80#R158%&	0.158	2	S, W, N, Z	B, D, F	S	P, R	DAL, SHA, TEP
RWR80#R160%&	0.160	2	S, W, N, Z	B, D	S	P, R	DAL, SHA, TEP
RWR80#R162%&	0.162	2	S, W, N, Z	B, D, F	S	P, R	DAL, SHA, TEP
RWR80#R164%&	0.164	2	S, W, N, Z	B, D	S	P, R	DAL, SHA, TEP
RWR80#R165%&	0.165	2	S, W, N, Z	B, D, F	S	P, R	DAL, SHA, TEP
RWR80#R167%&	0.167	2	S, W, N, Z	B, D	S	P, R	DAL, SHA, TEP
RWR80#R169%&	0.169	2	S, W, N, Z	B, D, F	S	P, R	DAL, SHA, TEP
RWR80#R172%&	0.172	2	S, W, N, Z	B, D	S	P, R	DAL, SHA, TEP
RWR80#R174%&	0.174	2	S, W, N, Z	B, D, F	S	P, R	DAL, SHA, TEP
RWR80#R176%&	0.176	2	S, W, N, Z	B, D	S	P, R	DAL, SHA, TEP
RWR80#R178%&	0.178	2	S, W, N, Z	B, D, F	S	P, R	DAL, SHA, TEP
RWR80#R180#&	0.180	2	S, W, N, Z	B, D, F	S	P, R	DAL, SHA, TEP
	Resistance	Power	Terminal	Resistance	Level 1	Level 2	
Part Number	Value (Ohms)	Rating (W)	Characteristic (#)	Tolerance (%)	(FRL)(&)	(FRL)(&)	Manufacturer
RWR80#R182%&	0.182	2	S, W, N, Z	B, D, F	S	P, R	DAL, SHA, TEP
RWR80#R184%&	0.184	2	S, W, N, Z	B, D	S	P, R	DAL, SHA, TEP
RWR80#R187%&	0.187	2	S, W, N, Z	B, D, F	S	P, R	DAL, SHA, TEP
RWR80#R189%&	0.189	2	S, W, N, Z	B, D	S	P, R	DAL, SHA, TEP
RWR80#R191%&	0.191	2	S, W, N, Z	B, D, F	S	P, R	DAL, SHA, TEP
RWR80#R193%&	0.193	2	S, W, N, Z	B, D	S	P, R	DAL, SHA, TEP
RWR80#R196%&	0.196	2	S, W, N, Z	B, D, F	S	P, R	DAL, SHA, TEP
RWR80#R198%&	0.198	2	S, W, N, Z	B, D	S	P, R	DAL, SHA, TEP
RWR80#R200%&	0.200	2	S, W, N, Z	B, D, F	S	P, R	DAL, SHA, TEP
RWR80#R203%&	0.203	2	S, W, N, Z	B, D	S	P, R	DAL, SHA, TEP
RWR80#R205%&	0.205	2	S, W, N, Z	B, D, F	S	P, R	DAL, SHA, TEP
RWR80#R208%&	0.208	2	S, W, N, Z	B, D	S	P, R	DAL, SHA, TEP
RWR80#R210%&	0.210	2	S, W, N, Z	B, D, F	S	P, R	DAL, SHA, TEP
RWR80#R213%&	0.213	2	S, W, N, Z	B, D	S	P, R	DAL, SHA, TEP
	Resistance	Power	Terminal	Resistance	Level 1	Level 2	
Part Number	Value (Ohms)	Rating (W)	Characteristic (#)	Tolerance (%)	(FRL)(&)	(FRL)(&)	Manufacturer
RWR80#R215%&	0.215	2	S, W, N, Z	B, D, F	S	P, R	DAL, SHA, TEP
RWR80#R218%&	0.218	2	S, W, N, Z	B, D	S	P, R	DAL, SHA, TEP
RWR80#R221%&	0.221	2	S, W, N, Z	B, D, F	S	P, R	DAL, SHA, TEP
RWR80#R223%&	0.223	2	S, W, N, Z	B, D	S	P, R	DAL, SHA, TEP
RWR80#R226%&	0.226	2	S, W, N, Z	B, D, F	S	P, R	DAL, SHA, TEP
RWR80#R229%&	0.229	2	S, W, N, Z	B, D	S	P, R	DAL, SHA, TEP

RWR80#R232%&	0.232	2	S, W, N, Z	B, D, F	S	P, R	DAL, SHA, TEP
RWR80#R234%&	0.234	2	S, W, N, Z	B, D	S	P, R	DAL, SHA, TEP
RWR80#R237%&	0.237	2	S, W, N, Z	B, D, F	S	P, R	DAL, SHA, TEP
RWR80#R240%&	0.240	2	S, W, N, Z	B, D	S	P, R	DAL, SHA, TEP
RWR80#R243%&	0.243	2	S, W, N, Z	B, D, F	S	P, R	DAL, SHA, TEP
RWR80#R246%&	0.246	2	S, W, N, Z	B, D	S	P, R	DAL, SHA, TEP
	Resistance	Power	Terminal	Resistance	Level 1	Level 2	
Part Number	Value (Ohms)	Rating (W)	Characteristic (#)	Tolerance (%)	(FRL)(&)	(FRL)(&)	Manufacturer
RWR80#R249%&	0.249	2	S, W, N, Z	B, D, F	S	P, R	DAL, SHA, TEP
RWR80#R252%&	0.252	2	S, W, N, Z	B, D	S	P, R	DAL, SHA, TEP
RWR80#R255%&	0.255	2	S, W, N, Z	B, D, F	S	P, R	DAL, SHA, TEP
RWR80#R258%&	0.258	2	S, W, N, Z	B, D	S	P, R	DAL, SHA, TEP
RWR80#R261%&	0.261	2	S, W, N, Z	B, D, F	S	P, R	DAL, SHA, TEP
RWR80#R264%&	0.264	2	S, W, N, Z	B, D	S	P, R	DAL, SHA, TEP
RWR80#R267%&	0.267	2	S, W, N, Z	B, D, F	S	P, R	DAL, SHA, TEP
RWR80#R271%&	0.271	2	S, W, N, Z	B, D	S	P, R	DAL, SHA, TEP
RWR80#R274%&	0.274	2	S, W, N, Z	B, D, F	S	P, R	DAL, SHA, TEP
RWR80#R277%&	0.277	2	S, W, N, Z	B, D	S	P, R	DAL, SHA, TEP
RWR80#R280#&	0.280	2	S, W, N, Z	B, D, F	S	P, R	DAL, SHA, TEP
RWR80#R284%&	0.284	2	S, W, N, Z	B, D	S	P, R	DAL, SHA, TEP
RWR80#R287%&	0.287	2	S, W, N, Z	B, D, F	S	P, R	DAL, SHA, TEP
RWR80#R291%&	0.291	2	S, W, N, Z	B, D	S	P, R	DAL, SHA, TEP
	Resistance	Power	Terminal	Resistance	Level 1	Level 2	
Part Number	Value (Ohms)	Rating (W)	Characteristic (#)	Tolerance (%)	(FRL)(&)	(FRL)(&)	Manufacturer
RWR80#R294%&	0.294	2	S, W, N, Z	B, D, F	S	P, R	DAL, SHA, TEP
RWR80#R298%&	0.298	2	S, W, N, Z	B, D	S	P, R	DAL, SHA, TEP
RWR80#R301%&	0.301	2	S, W, N, Z	B, D, F	S	P, R	DAL, SHA, TEP
RWR80#R305%&	0.305	2	S, W, N, Z	B, D	S	P, R	DAL, SHA, TEP
RWR80#R309%&	0.309	2	S, W, N, Z	B, D, F	S	P, R	DAL, SHA, TEP
RWR80#R312%&	0.312	2	S, W, N, Z	B, D	S	P, R	DAL, SHA, TEP
RWR80#R316%&	0.316	2	S, W, N, Z	B, D, F	S	P, R	DAL, SHA, TEP
RWR80#R320%&	0.320	2	S, W, N, Z	B, D	S	P, R	DAL, SHA, TEP
RWR80#R324%&	0.324	2	S, W, N, Z	B, D, F	S	P, R	DAL, SHA, TEP
RWR80#R328%&	0.328	2	S, W, N, Z	B, D	S	P, R	DAL, SHA, TEP
RWR80#R332%&	0.332	2	S, W, N, Z	B, D, F	S	P, R	DAL, SHA, TEP
RWR80#R336%&	0.336	2	S, W, N, Z	B, D	S	P, R	DAL, SHA, TEP
RWR80#R340%&	0.340	2	S, W, N, Z	B, D, F	S	P, R	DAL, SHA, TEP
RWR80#R344%&	0.344	2	S, W, N, Z	B, D	S	P, R	DAL, SHA, TEP
	Resistance	Power	Terminal	Resistance	Level 1	Level 2	
Part Number	Value (Ohms)	Rating (W)	Characteristic (#)	Tolerance (%)	(FRL)(&)	(FRL)(&)	Manufacturer
RWR80#R348%&	0.348	2	S, W, N, Z	B, D, F	S	P, R	DAL, SHA, TEP
RWR80#R352%&	0.352	2	S, W, N, Z	B, D	S	P, R	DAL, SHA, TEP
RWR80#R357%&	0.357	2	S, W, N, Z	B, D, F	S	P, R	DAL, SHA, TEP
RWR80#R361%&	0.361	2	S, W, N, Z	B, D	S	P, R	DAL, SHA, TEP
RWR80#R365%&	0.365	2	S, W, N, Z	B, D, F	S	P, R	DAL, SHA, TEP
RWR80#R370%&	0.370	2	S, W, N, Z	B, D	S	P, R	DAL, SHA, TEP
RWR80#R374%&	0.374	2	S, W, N, Z	B, D, F	S	P, R	DAL, SHA, TEP

RWR80#R379%&	0.379	2	S, W, N, Z	B, D	S	P, R	DAL, SHA, TEP
RWR80#R383%&	0.383	2	S, W, N, Z	B, D, F	S	P, R	DAL, SHA, TEP
RWR80#R388%&	0.388	2	S, W, N, Z	B, D	S	P, R	DAL, SHA, TEP
RWR80#R392%&	0.392	2	S, W, N, Z	B, D, F	S	P, R	DAL, SHA, TEP
RWR80#R397%&	0.397	2	S, W, N, Z	B, D	S	P, R	DAL, SHA, TEP
RWR80#R402%&	0.402	2	S, W, N, Z	B, D, F	S	P, R	DAL, SHA, TEP
RWR80#R407%&	0.407	2	S, W, N, Z	B, D	S	P, R	DAL, SHA, TEP
	Resistance	Power	Terminal	Resistance	Level 1	Level 2	
Part Number	Value (Ohms)	Rating (W)	Characteristic (#)	Tolerance (%)	(FRL)(&)	(FRL)(&)	Manufacturer
RWR80#R412%&	0.412	2	S, W, N, Z	B, D, F	S	P, R	DAL, SHA, TEP
RWR80#R417%&	0.417	2	S, W, N, Z	B, D	S	P, R	DAL, SHA, TEP
RWR80#R422%&	0.422	2	S, W, N, Z	B, D, F	S	P, R	DAL, SHA, TEP
RWR80#R427%&	0.427	2	S, W, N, Z	B, D	S	P, R	DAL, SHA, TEP
RWR80#R432%&	0.432	2	S, W, N, Z	B, D, F	S	P, R	DAL, SHA, TEP
RWR80#R437%&	0.437	2	S, W, N, Z	B, D	S	P, R	DAL, SHA, TEP
RWR80#R442%&	0.442	2	S, W, N, Z	B, D, F	S	P, R	DAL, SHA, TEP
RWR80#R448%&	0.448	2	S, W, N, Z	B, D	S	P, R	DAL, SHA, TEP
RWR80#R453%&	0.453	2	S, W, N, Z	B, D, F	S	P, R	DAL, SHA, TEP
RWR80#R459%&	0.459	2	S, W, N, Z	B, D	S	P, R	DAL, SHA, TEP
RWR80#R464%&	0.464	2	S, W, N, Z	B, D, F	S	P, R	DAL, SHA, TEP
RWR80#R470%&	0.470	2	S, W, N, Z	B, D	S	P, R	DAL, SHA, TEP
RWR80#R475%&	0.475	2	S, W, N, Z	B, D, F	S	P, R	DAL, SHA, TEP
RWR80#R481%&	0.481	2	S, W, N, Z	B, D	S	P, R	DAL, SHA, TEP
	Resistance	Power	Terminal	Resistance	Level 1	Level 2	
Part Number	Value (Ohms)	Rating (W)	Characteristic (#)	Tolerance (%)	(FRL)(&)	(FRL)(&)	Manufacturer
RWR80#R487%&	0.487	2	S, W, N, Z	B, D, F	S	P, R	DAL, SHA, TEP
RWR80#R493%&	0.493	2	S, W, N, Z	B, D	S	P, R	DAL, SHA, TEP
RWR80#R499%&	0.499	2	S, W, N, Z	B, D, F	S	P, R	DAL, SHA, TEP
RWR80#R505%&	0.505	2	S, W, N, Z	B, D	S	P, R	DAL, SHA, TEP
RWR80#R511%&	0.511	2	S, W, N, Z	B, D, F	S	P, R	DAL, SHA, TEP
RWR80#R517%&	0.517	2	S, W, N, Z	B, D	S	P, R	DAL, SHA, TEP
RWR80#R523%&	0.523	2	S, W, N, Z	B, D, F	S	P, R	DAL, SHA, TEP
RWR80#R530%&	0.530	2	S, W, N, Z	B, D	S	P, R	DAL, SHA, TEP
RWR80#R536%&	0.536	2	S, W, N, Z	B, D, F	S	P, R	DAL, SHA, TEP
RWR80#R542%&	0.542	2	S, W, N, Z	B, D	S	P, R	DAL, SHA, TEP
RWR80#R549%&	0.549	2	S, W, N, Z	B, D, F	S	P, R	DAL, SHA, TEP
RWR80#R556%&	0.556	2	S, W, N, Z	B, D	S	P, R	DAL, SHA, TEP
	Resistance	Power	Terminal	Resistance	Level 1	Level 2	
Part Number	Value (Ohms)	Rating (W)	Characteristic (#)	Tolerance (%)	(FRL)(&)	(FRL)(&)	Manufacturer
RWR80#R562%&	0.562	2	S, W, N, Z	B, D, F	S	P, R	DAL, SHA, TEP
RWR80#R569%&	0.569	2	S, W, N, Z	B, D	S	P, R	DAL, SHA, TEP
RWR80#R576%&	0.576	2	S, W, N, Z	B, D, F	S	P, R	DAL, SHA, TEP
RWR80#R583%&	0.583	2	S, W, N, Z	B, D	S	P, R	DAL, SHA, TEP
RWR80#R590%&	0.590	2	S, W, N, Z	B, D, F	S	P, R	DAL, SHA, TEP
RWR80#R597%&	0.597	2	S, W, N, Z	B, D	S	P, R	DAL, SHA, TEP
RWR80#R604%&	0.604	2	S, W, N, Z	B, D, F	S	P, R	DAL, SHA, TEP
RWR80#R612%&	0.612	2	S, W, N, Z	B, D	S	P, R	DAL, SHA, TEP

RWR80#R619%&	0.619	2	S, W, N, Z	B, D, F	S	P, R	DAL, SHA, TEP
RWR80#R626%&	0.626	2	S, W, N, Z	B, D	S	P, R	DAL, SHA, TEP
RWR80#R634%&	0.634	2	S, W, N, Z	B, D, F	S	P, R	DAL, SHA, TEP
RWR80#R642%&	0.642	2	S, W, N, Z	B, D	S	P, R	DAL, SHA, TEP
RWR80#R649%&	0.649	2	S, W, N, Z	B, D, F	S	P, R	DAL, SHA, TEP
RWR80#R657%&	0.657	2	S, W, N, Z	B, D	S	P, R	DAL, SHA, TEP
	Resistance	Power	Terminal	Resistance	Level 1	Level 2	
Part Number	Value (Ohms)	Rating (W)	Characteristic (#)	Tolerance (%)	(FRL)(&)	(FRL)(&)	Manufacturer
RWR80#R665%&	0.665	2	S, W, N, Z	B, D, F	S	P, R	DAL, SHA, TEP
RWR80#R673%&	0.673	2	S, W, N, Z	B, D	S	P, R	DAL, SHA, TEP
RWR80#R681%&	0.681	2	S, W, N, Z	B, D, F	S	P, R	DAL, SHA, TEP
RWR80#R690%&	0.690	2	S, W, N, Z	B, D	S	P, R	DAL, SHA, TEP
RWR80#R698%&	0.698	2	S, W, N, Z	B, D, F	S	P, R	DAL, SHA, TEP
RWR80#R706%&	0.706	2	S, W, N, Z	B, D	S	P, R	DAL, SHA, TEP
RWR80#R715%&	0.715	2	S, W, N, Z	B, D, F	S	P, R	DAL, SHA, TEP
RWR80#R723%&	0.723	2	S, W, N, Z	B, D	S	P, R	DAL, SHA, TEP
RWR80#R732%&	0.732	2	S, W, N, Z	B, D, F	S	P, R	DAL, SHA, TEP
RWR80#R741%&	0.741	2	S, W, N, Z	B, D	S	P, R	DAL, SHA, TEP
RWR80#R750%&	0.750	2	S, W, N, Z	B, D, F	S	P, R	DAL, SHA, TEP
RWR80#R759%&	0.759	2	S, W, N, Z	B, D	S	P, R	DAL, SHA, TEP
RWR80#R768%&	0.768	2	S, W, N, Z	B, D, F	S	P, R	DAL, SHA, TEP
RWR80#R776%&	0.776	2	S, W, N, Z	B, D	S	P, R	DAL, SHA, TEP
	Resistance	Power	Terminal	Resistance	Level 1	Level 2	
Part Number	Value (Ohms)	Rating (W)	Characteristic (#)	Tolerance (%)	(FRL)(&)	(FRL)(&)	Manufacturer
RWR80#R787%&	0.787	2	S, W, N, Z	B, D, F	S	P, R	DAL, SHA, TEP
RWR80#R796%&	0.796	2	S, W, N, Z	B, D	S	P, R	DAL, SHA, TEP
RWR80#R806%&	0.806	2	S, W, N, Z	B, D, F	S	P, R	DAL, SHA, TEP
RWR80#R816%&	0.816	2	S, W, N, Z	B, D	S	P, R	DAL, SHA, TEP
RWR80#R825%&	0.825	2	S, W, N, Z	B, D, F	S	P, R	DAL, SHA, TEP
RWR80#R835%&	0.835	2	S, W, N, Z	B, D	S	P, R	DAL, SHA, TEP
RWR80#R845%&	0.845	2	S, W, N, Z	B, D, F	S	P, R	DAL, SHA, TEP
RWR80#R856%&	0.856	2	S, W, N, Z	B, D	S	P, R	DAL, SHA, TEP
RWR80#R866%&	0.866	2	S, W, N, Z	B, D, F	S	P, R	DAL, SHA, TEP
RWR80#R876%&	0.876	2	S, W, N, Z	B, D	S	P, R	DAL, SHA, TEP
RWR80#R887%&	0.887	2	S, W, N, Z	B, D, F	S	P, R	DAL, SHA, TEP
RWR80#R898%&	0.898	2	S, W, N, Z	B, D	S	P, R	DAL, SHA, TEP
RWR80#R909%&	0.909	2	S, W, N, Z	B, D, F	S	P, R	DAL, SHA, TEP
RWR80#R920%&	0.920	2	S, W, N, Z	B, D	S	P, R	DAL, SHA, TEP
	Resistance	Power	Terminal	Resistance	Level 1	Level 2	
Part Number	Value (Ohms)	Rating (W)	Characteristic (#)	Tolerance (%)	(FRL)(&)	(FRL)(&)	Manufacturer
RWR80#R931%&	0.931	2	S, W, N, Z	B, D, F	S	P, R	DAL, SHA, TEP
RWR80#R942%&	0.942	2	S, W, N, Z	B, D	S	P, R	DAL, SHA, TEP
RWR80#R953%&	0.953	2	S, W, N, Z	B, D, F	S	P, R	DAL, SHA, TEP
RWR80#R965%&	0.965	2	S, W, N, Z	B, D	S	P, R	DAL, SHA, TEP
RWR80#R976%&	0.976	2	S, W, N, Z	B, D, F	S	P, R	DAL, SHA, TEP
RWR80#R988%&	0.988	2	S, W, N, Z	B, D	S	P, R	DAL, SHA, TEP

RWR80 Wirewound Resistors: 1.00 Ohms through 9.88 Ohms

	Resistance	Power	Terminal	Resistance	Level 1	Level 2	
Part Number	Value (Ohms)	Rating (W)	Characteristic (#)	Tolerance (%)	(FRL)(&)	(FRL)(&)	Manufacturer
RWR80#1R00%&	1.00	2	S, W, N, Z	B, D, F	S	P, R	DAL, SHA, TEP
RWR80#1R01%&	1.01	2	S, W, N, Z	B, D	S	P, R	DAL, SHA, TEP
RWR80#1R02%&	1.02	2	S, W, N, Z	B, D, F	S	P, R	DAL, SHA, TEP
RWR80#1R04%&	1.04	2	S, W, N, Z	B, D	S	P, R	DAL, SHA, TEP
RWR80#1R05%&	1.05	2	S, W, N, Z	B, D, F	S	P, R	DAL, SHA, TEP
RWR80#1R06%&	1.06	2	S, W, N, Z	B, D	S	P, R	DAL, SHA, TEP
RWR80#1R07%&	1.07	2	S, W, N, Z	B, D, F	S	P, R	DAL, SHA, TEP
RWR80#1R09%&	1.09	2	S, W, N, Z	B, D	S	P, R	DAL, SHA, TEP
	Resistance	Power	Terminal	Resistance	Level 1	Level 2	
Part Number	Value (Ohms)	Rating (W)	Characteristic (#)	Tolerance (%)	(FRL)(&)	(FRL)(&)	Manufacturer
RWR80#1R10%&	1.10	2	S, W, N, Z	B, D, F	S	P, R	DAL, SHA, TEP
RWR80#1R11%&	1.11	2	S, W, N, Z	B, D	S	P, R	DAL, SHA, TEP
RWR80#1R13%&	1.13	2	S, W, N, Z	B, D, F	S	P, R	DAL, SHA, TEP
RWR80#1R14%&	1.14	2	S, W, N, Z	B, D	S	P, R	DAL, SHA, TEP
RWR80#1R15%&	1.15	2	S, W, N, Z	B, D, F	S	P, R	DAL, SHA, TEP
RWR80#1R17%&	1.17	2	S, W, N, Z	B, D	S	P, R	DAL, SHA, TEP
RWR80#1R18%&	1.18	2	S, W, N, Z	B, D, F	S	P, R	DAL, SHA, TEP
RWR80#1R20%&	1.20	2	S, W, N, Z	B, D	S	P, R	DAL, SHA, TEP
RWR80#1R21%&	1.21	2	S, W, N, Z	B, D, F	S	P, R	DAL, SHA, TEP
RWR80#1R23%&	1.23	2	S, W, N, Z	B, D	S	P, R	DAL, SHA, TEP
RWR80#1R24%&	1.24	2	S, W, N, Z	B, D, F	S	P, R	DAL, SHA, TEP
RWR80#1R26%&	1.26	2	S, W, N, Z	B, D	S	P, R	DAL, SHA, TEP
RWR80#1R27%&	1.27	2	S, W, N, Z	B, D, F	S	P, R	DAL, SHA, TEP
RWR80#1R29%&	1.29	2	S, W, N, Z	B, D	S	P, R	DAL, SHA, TEP
	Resistance	Power	Terminal	Resistance	Level 1	Level 2	
Part Number	Value (Ohms)	Rating (W)	Characteristic (#)	Tolerance (%)	(FRL)(&)	(FRL)(&)	Manufacturer
RWR80#1R30%&	1.30	2	S, W, N, Z	B, D, F	S	P, R	DAL, SHA, TEP
RWR80#1R32%&	1.32	2	S, W, N, Z	B, D	S	P, R	DAL, SHA, TEP
RWR80#1R33%&	1.33	2	S, W, N, Z	B, D, F	S	P, R	DAL, SHA, TEP
RWR80#1R35%&	1.35	2	S, W, N, Z	B, D	S	P, R	DAL, SHA, TEP
RWR80#1R37%&	1.37	2	S, W, N, Z	B, D, F	S	P, R	DAL, SHA, TEP
RWR80#1R38%&	1.38	2	S, W, N, Z	B, D	S	P, R	DAL, SHA, TEP
RWR80#1R40%&	1.40	2	S, W, N, Z	B, D, F	S	P, R	DAL, SHA, TEP
RWR80#1R42%&	1.42	2	S, W, N, Z	B, D	S	P, R	DAL, SHA, TEP
RWR80#1R43%&	1.43	2	S, W, N, Z	B, D, F	S	P, R	DAL, SHA, TEP
RWR80#1R45%&	1.45	2	S, W, N, Z	B, D	S	P, R	DAL, SHA, TEP
RWR80#1R47%&	1.47	2	S, W, N, Z	B, D, F	S	P, R	DAL, SHA, TEP
RWR80#1R49%&	1.49	2	S, W, N, Z	B, D	S	P, R	DAL, SHA, TEP
RWR80#1R50%&	1.50	2	S, W, N, Z	B, D, F	S	P, R	DAL, SHA, TEP
RWR80#1R52%&	1.52	2	S, W, N, Z	B, D	S	P, R	DAL, SHA, TEP

	Resistance	Power	Terminal	Resistance	Level 1	Level 2	
Part Number	Value (Ohms)	Rating (W)	Characteristic (#)	Tolerance (%)	(FRL)(&)	(FRL)(&)	Manufacturer
RWR80#1R54%&	1.54	2	S, W, N, Z	B, D, F	S	P, R	DAL, SHA, TEP
RWR80#1R56%&	1.56	2	S, W, N, Z	B, D	S	P, R	DAL, SHA, TEP
RWR80#1R58%&	1.58	2	S, W, N, Z	B, D, F	S	P, R	DAL, SHA, TEP
RWR80#1R60%&	1.60	2	S, W, N, Z	B, D	S	P, R	DAL, SHA, TEP
RWR80#1R62%&	1.62	2	S, W, N, Z	B, D, F	S	P, R	DAL, SHA, TEP
RWR80#1R64%&	1.64	2	S, W, N, Z	B, D	S	P, R	DAL, SHA, TEP
RWR80#1R65%&	1.65	2	S, W, N, Z	B, D, F	S	P, R	DAL, SHA, TEP
RWR80#1R67%&	1.67	2	S, W, N, Z	B, D	S	P, R	DAL, SHA, TEP
RWR80#1R69%&	1.69	2	S, W, N, Z	B, D, F	S	P, R	DAL, SHA, TEP
RWR80#1R72%&	1.72	2	S, W, N, Z	B, D	S	P, R	DAL, SHA, TEP
RWR80#1R74%&	1.74	2	S, W, N, Z	B, D, F	S	P, R	DAL, SHA, TEP
RWR80#1R76%&	1.76	2	S, W, N, Z	B, D	S	P, R	DAL, SHA, TEP
RWR80#1R78%&	1.78	2	S, W, N, Z	B, D, F	S	P, R	DAL, SHA, TEP
RWR80#1R80#&	1.80	2	S, W, N, Z	B, D, F	S	P, R	DAL, SHA, TEP
	Resistance	Power	Terminal	Resistance	Level 1	Level 2	
Part Number	Value (Ohms)	Rating (W)	Characteristic (#)	Tolerance (%)	(FRL)(&)	(FRL)(&)	Manufacturer
RWR80#1R82%&	1.82	2	S, W, N, Z	B, D, F	S	P, R	DAL, SHA, TEP
RWR80#1R84%&	1.84	2	S, W, N, Z	B, D	S	P, R	DAL, SHA, TEP
RWR80#1R87%&	1.87	2	S, W, N, Z	B, D, F	S	P, R	DAL, SHA, TEP
RWR80#1R89%&	1.89	2	S, W, N, Z	B, D	S	P, R	DAL, SHA, TEP
RWR80#1R91%&	1.91	2	S, W, N, Z	B, D, F	S	P, R	DAL, SHA, TEP
RWR80#1R93%&	1.93	2	S, W, N, Z	B, D	S	P, R	DAL, SHA, TEP
RWR80#1R96%&	1.96	2	S, W, N, Z	B, D, F	S	P, R	DAL, SHA, TEP
RWR80#1R98%&	1.98	2	S, W, N, Z	B, D	S	P, R	DAL, SHA, TEP
RWR80#2R00%&	2.00	2	S, W, N, Z	B, D, F	S	P, R	DAL, SHA, TEP
RWR80#2R03%&	2.03	2	S, W, N, Z	B, D	S	P, R	DAL, SHA, TEP
RWR80#2R05%&	2.05	2	S, W, N, Z	B, D, F	S	P, R	DAL, SHA, TEP
RWR80#2R08%&	2.08	2	S, W, N, Z	B, D	S	P, R	DAL, SHA, TEP
RWR80#2R10%&	2.10	2	S, W, N, Z	B, D, F	S	P, R	DAL, SHA, TEP
RWR80#2R13%&	2.13	2	S, W, N, Z	B, D	S	P, R	DAL, SHA, TEP
	Resistance	Power	Terminal	Resistance	Level 1	Level 2	
Part Number	Value (Ohms)	Rating (W)	Characteristic (#)	Tolerance (%)	(FRL)(&)	(FRL)(&)	Manufacturer
RWR80#2R15%&	2.15	2	S, W, N, Z	B, D, F	S	P, R	DAL, SHA, TEP
RWR80#2R18%&	2.18	2	S, W, N, Z	B, D	S	P, R	DAL, SHA, TEP
RWR80#2R21%&	2.21	2	S, W, N, Z	B, D, F	S	P, R	DAL, SHA, TEP
RWR80#2R23%&	2.23	2	S, W, N, Z	B, D	S	P, R	DAL, SHA, TEP
RWR80#2R26%&	2.26	2	S, W, N, Z	B, D, F	S	P, R	DAL, SHA, TEP
RWR80#2R29%&	2.29	2	S, W, N, Z	B, D	S	P, R	DAL, SHA, TEP
RWR80#2R32%&	2.32	2	S, W, N, Z	B, D, F	S	P, R	DAL, SHA, TEP
RWR80#2R34%&	2.34	2	S, W, N, Z	B, D	S	P, R	DAL, SHA, TEP
RWR80#2R37%&	2.37	2	S, W, N, Z	B, D, F	S	P, R	DAL, SHA, TEP
RWR80#2R40%&	2.40	2	S, W, N, Z	B, D	S	P, R	DAL, SHA, TEP
RWR80#2R43%&	2.43	2	S, W, N, Z	B, D, F	S	P, R	DAL, SHA, TEP
RWR80#2R46%&	2.46	2	S, W, N, Z	B, D	S	P, R	DAL, SHA, TEP
	Resistance	Power	Terminal	Resistance	Level 1	Level 2	

Part Number	Value (Ohms)	Rating (W)	Characteristic (#)	Tolerance (%)	(FRL)(&)	(FRL)(&)	Manufacturer
RWR80#2R49%&	2.49	2	S, W, N, Z	B, D, F	S	P, R	DAL, SHA, TEP
RWR80#2R52%&	2.52	2	S, W, N, Z	B, D	S	P, R	DAL, SHA, TEP
RWR80#2R55%&	2.55	2	S, W, N, Z	B, D, F	S	P, R	DAL, SHA, TEP
RWR80#2R58%&	2.58	2	S, W, N, Z	B, D	S	P, R	DAL, SHA, TEP
RWR80#2R61%&	2.61	2	S, W, N, Z	B, D, F	S	P, R	DAL, SHA, TEP
RWR80#2R64%&	2.64	2	S, W, N, Z	B, D	S	P, R	DAL, SHA, TEP
RWR80#2R67%&	2.67	2	S, W, N, Z	B, D, F	S	P, R	DAL, SHA, TEP
RWR80#2R71%&	2.71	2	S, W, N, Z	B, D	S	P, R	DAL, SHA, TEP
RWR80#2R74%&	2.74	2	S, W, N, Z	B, D, F	S	P, R	DAL, SHA, TEP
RWR80#2R77%&	2.77	2	S, W, N, Z	B, D	S	P, R	DAL, SHA, TEP
RWR80#2R80#&	2.80	2	S, W, N, Z	B, D, F	S	P, R	DAL, SHA, TEP
RWR80#2R84%&	2.84	2	S, W, N, Z	B, D	S	P, R	DAL, SHA, TEP
RWR80#2R87%&	2.87	2	S, W, N, Z	B, D, F	S	P, R	DAL, SHA, TEP
RWR80#2R91%&	2.91	2	S, W, N, Z	B, D	S	P, R	DAL, SHA, TEP
	Resistance	Power	Terminal	Resistance	Level 1	Level 2	
Part Number	Value (Ohms)	Rating (W)	Characteristic (#)	Tolerance (%)	(FRL)(&)	(FRL)(&)	Manufacturer
RWR80#2R94%&	2.94	2	S, W, N, Z	B, D, F	S	P, R	DAL, SHA, TEP
RWR80#2R98%&	2.98	2	S, W, N, Z	B, D	S	P, R	DAL, SHA, TEP
RWR80#3R01%&	3.01	2	S, W, N, Z	B, D, F	S	P, R	DAL, SHA, TEP
RWR80#3R05%&	3.05	2	S, W, N, Z	B, D	S	P, R	DAL, SHA, TEP
RWR80#3R09%&	3.09	2	S, W, N, Z	B, D, F	S	P, R	DAL, SHA, TEP
RWR80#3R12%&	3.12	2	S, W, N, Z	B, D	S	P, R	DAL, SHA, TEP
RWR80#3R16%&	3.16	2	S, W, N, Z	B, D, F	S	P, R	DAL, SHA, TEP
RWR80#3R20%&	3.20	2	S, W, N, Z	B, D	S	P, R	DAL, SHA, TEP
RWR80#3R24%&	3.24	2	S, W, N, Z	B, D, F	S	P, R	DAL, SHA, TEP
RWR80#3R28%&	3.28	2	S, W, N, Z	B, D	S	P, R	DAL, SHA, TEP
RWR80#3R32%&	3.32	2	S, W, N, Z	B, D, F	S	P, R	DAL, SHA, TEP
RWR80#3R36%&	3.36	2	S, W, N, Z	B, D	S	P, R	DAL, SHA, TEP
RWR80#3R40%&	3.40	2	S, W, N, Z	B, D, F	S	P, R	DAL, SHA, TEP
RWR80#3R44%&	3.44	2	S, W, N, Z	B, D	S	P, R	DAL, SHA, TEP
	Resistance	Power	Terminal	Resistance	Level 1	Level 2	
Part Number	Value (Ohms)	Rating (W)	Characteristic (#)	Tolerance (%)	(FRL)(&)	(FRL)(&)	Manufacturer
RWR80#3R48%&	3.48	2	S, W, N, Z	B, D, F	S	P, R	DAL, SHA, TEP
RWR80#3R52%&	3.52	2	S, W, N, Z	B, D	S	P, R	DAL, SHA, TEP
RWR80#3R57%&	3.57	2	S, W, N, Z	B, D, F	S	P, R	DAL, SHA, TEP
RWR80#3R61%&	3.61	2	S, W, N, Z	B, D	S	P, R	DAL, SHA, TEP
RWR80#3R65%&	3.65	2	S, W, N, Z	B, D, F	S	P, R	DAL, SHA, TEP
RWR80#3R70%&	3.70	2	S, W, N, Z	B, D	S	P, R	DAL, SHA, TEP
RWR80#3R74%&	3.74	2	S, W, N, Z	B, D, F	S	P, R	DAL, SHA, TEP
RWR80#3R79%&	3.79	2	S, W, N, Z	B, D	S	P, R	DAL, SHA, TEP
RWR80#3R83%&	3.83	2	S, W, N, Z	B, D, F	S	P, R	DAL, SHA, TEP
RWR80#3R88%&	3.88	2	S, W, N, Z	B, D	S	P, R	DAL, SHA, TEP
RWR80#3R92%&	3.92	2	S, W, N, Z	B, D, F	S	P, R	DAL, SHA, TEP
RWR80#3R97%&	3.97	2	S, W, N, Z	B, D	S	P, R	DAL, SHA, TEP
RWR80#4R02%&	4.02	2	S, W, N, Z	B, D, F	S	P, R	DAL, SHA, TEP
RWR80#4R07%&	4.07	2	S, W, N, Z	B, D	S	P, R	DAL, SHA, TEP

	Resistance	Power	Terminal	Resistance	Level 1	Level 2	
Part Number	Value (Ohms)	Rating (W)	Characteristic (#)	Tolerance (%)	(FRL)(&)	(FRL)(&)	Manufacturer
RWR80#4R12%&	4.12	2	S, W, N, Z	B, D, F	S	P, R	DAL, SHA, TEP
RWR80#4R17%&	4.17	2	S, W, N, Z	B, D	S	P, R	DAL, SHA, TEP
RWR80#4R22%&	4.22	2	S, W, N, Z	B, D, F	S	P, R	DAL, SHA, TEP
RWR80#4R27%&	4.27	2	S, W, N, Z	B, D	S	P, R	DAL, SHA, TEP
RWR80#4R32%&	4.32	2	S, W, N, Z	B, D, F	S	P, R	DAL, SHA, TEP
RWR80#4R37%&	4.37	2	S, W, N, Z	B, D	S	P, R	DAL, SHA, TEP
RWR80#4R42%&	4.42	2	S, W, N, Z	B, D, F	S	P, R	DAL, SHA, TEP
RWR80#4R48%&	4.48	2	S, W, N, Z	B, D	S	P, R	DAL, SHA, TEP
RWR80#4R53%&	4.53	2	S, W, N, Z	B, D, F	S	P, R	DAL, SHA, TEP
RWR80#4R59%&	4.59	2	S, W, N, Z	B, D	S	P, R	DAL, SHA, TEP
RWR80#4R64%&	4.64	2	S, W, N, Z	B, D, F	S	P, R	DAL, SHA, TEP
RWR80#4R70%&	4.70	2	S, W, N, Z	B, D	S	P, R	DAL, SHA, TEP
RWR80#4R75%&	4.75	2	S, W, N, Z	B, D, F	S	P, R	DAL, SHA, TEP
RWR80#4R81%&	4.81	2	S, W, N, Z	B, D	S	P, R	DAL, SHA, TEP
	Resistance	Power	Terminal	Resistance	Level 1	Level 2	
Part Number	Value (Ohms)	Rating (W)	Characteristic (#)	Tolerance (%)	(FRL)(&)	(FRL)(&)	Manufacturer
RWR80#4R87%&	4.87	2	S, W, N, Z	B, D, F	S	P, R	DAL, SHA, TEP
RWR80#4R93%&	4.93	2	S, W, N, Z	B, D	S	P, R	DAL, SHA, TEP
RWR80#4R99%&	4.99	2	S, W, N, Z	B, D, F	S	P, R	DAL, SHA, TEP
RWR80#5R05%&	5.05	2	S, W, N, Z	B, D	S	P, R	DAL, SHA, TEP
RWR80#5R11%&	5.11	2	S, W, N, Z	B, D, F	S	P, R	DAL, SHA, TEP
RWR80#5R17%&	5.17	2	S, W, N, Z	B, D	S	P, R	DAL, SHA, TEP
RWR80#5R23%&	5.23	2	S, W, N, Z	B, D, F	S	P, R	DAL, SHA, TEP
RWR80#5R30%&	5.30	2	S, W, N, Z	B, D	S	P, R	DAL, SHA, TEP
RWR80#5R36%&	5.36	2	S, W, N, Z	B, D, F	S	P, R	DAL, SHA, TEP
RWR80#5R42%&	5.42	2	S, W, N, Z	B, D	S	P, R	DAL, SHA, TEP
RWR80#5R49%&	5.49	2	S, W, N, Z	B, D, F	S	P, R	DAL, SHA, TEP
RWR80#5R56%&	5.56	2	S, W, N, Z	B, D	S	P, R	DAL, SHA, TEP
	Resistance	Power	Terminal	Resistance	Level 1	Level 2	
Part Number	Value (Ohms)	Rating (W)	Characteristic (#)	Tolerance (%)	(FRL)(&)	(FRL)(&)	Manufacturer
RWR80#5R62%&	5.62	2	S, W, N, Z	B, D, F	S	P, R	DAL, SHA, TEP
RWR80#5R69%&	5.69	2	S, W, N, Z	B, D	S	P, R	DAL, SHA, TEP
RWR80#5R76%&	5.76	2	S, W, N, Z	B, D, F	S	P, R	DAL, SHA, TEP
RWR80#5R83%&	5.83	2	S, W, N, Z	B, D	S	P, R	DAL, SHA, TEP
RWR80#5R90%&	5.90	2	S, W, N, Z	B, D, F	S	P, R	DAL, SHA, TEP
RWR80#5R97%&	5.97	2	S, W, N, Z	B, D	S	P, R	DAL, SHA, TEP
RWR80#6R04%&	6.04	2	S, W, N, Z	B, D, F	S	P, R	DAL, SHA, TEP
RWR80#6R12%&	6.12	2	S, W, N, Z	B, D	S	P, R	DAL, SHA, TEP
RWR80#6R19%&	6.19	2	S, W, N, Z	B, D, F	S	P, R	DAL, SHA, TEP
RWR80#6R26%&	6.26	2	S, W, N, Z	B, D	S	P, R	DAL, SHA, TEP
RWR80#6R34%&	6.34	2	S, W, N, Z	B, D, F	S	P, R	DAL, SHA, TEP
RWR80#6R42%&	6.42	2	S, W, N, Z	B, D	S	P, R	DAL, SHA, TEP
RWR80#6R49%&	6.49	2	S, W, N, Z	B, D, F	S	P, R	DAL, SHA, TEP
RWR80#6R57%&	6.57	2	S, W, N, Z	B, D	S	P, R	DAL, SHA, TEP
	Resistance	Power	Terminal	Resistance	Level 1	Level 2	

Part Number	Value (Ohms)	Rating (W)	Characteristic (#)	Tolerance (%)	(FRL)(&)	(FRL)(&)	Manufacturer
RWR80#6R65%&	6.65	2	S, W, N, Z	B, D, F	S	P, R	DAL, SHA, TEP
RWR80#6R73%&	6.73	2	S, W, N, Z	B, D	S	P, R	DAL, SHA, TEP
RWR80#6R81%&	6.81	2	S, W, N, Z	B, D, F	S	P, R	DAL, SHA, TEP
RWR80#6R90%&	6.90	2	S, W, N, Z	B, D	S	P, R	DAL, SHA, TEP
RWR80#6R98%&	6.98	2	S, W, N, Z	B, D, F	S	P, R	DAL, SHA, TEP
RWR80#7R06%&	7.06	2	S, W, N, Z	B, D	S	P, R	DAL, SHA, TEP
RWR80#7R15%&	7.15	2	S, W, N, Z	B, D, F	S	P, R	DAL, SHA, TEP
RWR80#7R23%&	7.23	2	S, W, N, Z	B, D	S	P, R	DAL, SHA, TEP
RWR80#7R32%&	7.32	2	S, W, N, Z	B, D, F	S	P, R	DAL, SHA, TEP
RWR80#7R41%&	7.41	2	S, W, N, Z	B, D	S	P, R	DAL, SHA, TEP
RWR80#7R50%&	7.50	2	S, W, N, Z	B, D, F	S	P, R	DAL, SHA, TEP
RWR80#7R59%&	7.59	2	S, W, N, Z	B, D	S	P, R	DAL, SHA, TEP
RWR80#7R68%&	7.68	2	S, W, N, Z	B, D, F	S	P, R	DAL, SHA, TEP
RWR80#7R77%&	7.77	2	S, W, N, Z	B, D	S	P, R	DAL, SHA, TEP
	Resistance	Power	Terminal	Resistance	Level 1	Level 2	
Part Number	Value (Ohms)	Rating (W)	Characteristic (#)	Tolerance (%)	(FRL)(&)	(FRL)(&)	Manufacturer
RWR80#7R87%&	7.87	2	S, W, N, Z	B, D, F	S	P, R	DAL, SHA, TEP
RWR80#7R96%&	7.96	2	S, W, N, Z	B, D	S	P, R	DAL, SHA, TEP
RWR80#8R06%&	8.06	2	S, W, N, Z	B, D, F	S	P, R	DAL, SHA, TEP
RWR80#8R16%&	8.16	2	S, W, N, Z	B, D	S	P, R	DAL, SHA, TEP
RWR80#8R25%&	8.25	2	S, W, N, Z	B, D, F	S	P, R	DAL, SHA, TEP
RWR80#8R35%&	8.35	2	S, W, N, Z	B, D	S	P, R	DAL, SHA, TEP
RWR80#8R45%&	8.45	2	S, W, N, Z	B, D, F	S	P, R	DAL, SHA, TEP
RWR80#8R56%&	8.56	2	S, W, N, Z	B, D	S	P, R	DAL, SHA, TEP
RWR80#8R66%&	8.66	2	S, W, N, Z	B, D, F	S	P, R	DAL, SHA, TEP
RWR80#8R76%&	8.76	2	S, W, N, Z	B, D	S	P, R	DAL, SHA, TEP
RWR80#8R87%&	8.87	2	S, W, N, Z	B, D, F	S	P, R	DAL, SHA, TEP
RWR80#8R98%&	8.98	2	S, W, N, Z	B, D	S	P, R	DAL, SHA, TEP
RWR80#9R09%&	9.09	2	S, W, N, Z	B, D, F	S	P, R	DAL, SHA, TEP
RWR80#9R20%&	9.20	2	S, W, N, Z	B, D	S	P, R	DAL, SHA, TEP
	Resistance	Power	Terminal	Resistance	Level 1	Level 2	
Part Number	Value (Ohms)	Rating (W)	Characteristic (#)	Tolerance (%)	(FRL)(&)	(FRL)(&)	Manufacturer
RWR80#9R31%&	9.31	2	S, W, N, Z	B, D, F	S	P, R	DAL, SHA, TEP
RWR80#9R42%&	9.42	2	S, W, N, Z	B, D	S	P, R	DAL, SHA, TEP
RWR80#9R53%&	9.53	2	S, W, N, Z	B, D, F	S	P, R	DAL, SHA, TEP
RWR80#9R65%&	9.65	2	S, W, N, Z	B, D	S	P, R	DAL, SHA, TEP
RWR80#9R76%&	9.76	2	S, W, N, Z	B, D, F	S	P, R	DAL, SHA, TEP
RWR80#9R88%&	9.88	2	S, W, N, Z	B, D	S	P, R	DAL, SHA, TEP

RWR80 Wirewound Resistors: 10.0 Ohms through 98.8 Ohms

	Resistance	Power	Terminal	Resistance	Level 1	Level 2	
Part Number	Value (Ohms)	Rating (W)	Characteristic (#)	Tolerance (%)	(FRL)(&)	(FRL)(&)	Manufacturer
RWR80#10R0%&	10.0	2	S, W, N, Z	B, D, F	S	P, R	DAL, SHA, TEP

RWR80#10R1%&	10.1	2	S, W, N, Z	B, D	S	P, R	DAL, SHA, TEP
RWR80#10R2%&	10.2	2	S, W, N, Z	B, D, F	S	P, R	DAL, SHA, TEP
RWR80#10R4%&	10.4	2	S, W, N, Z	B, D	S	P, R	DAL, SHA, TEP
RWR80#10R5%&	10.5	2	S, W, N, Z	B, D, F	S	P, R	DAL, SHA, TEP
RWR80#10R6%&	10.6	2	S, W, N, Z	B, D	S	P, R	DAL, SHA, TEP
RWR80#10R7%&	10.7	2	S, W, N, Z	B, D, F	S	P, R	DAL, SHA, TEP
RWR80#10R9%&	10.9	2	S, W, N, Z	B, D	S	P, R	DAL, SHA, TEP
	Resistance	Power	Terminal	Resistance	Level 1	Level 2	
Part Number	Value (Ohms)	Rating (W)	Characteristic (#)	Tolerance (%)	(FRL)(&)	(FRL)(&)	Manufacturer
RWR80#11R0%&	11.0	2	S, W, N, Z	B, D, F	S	P, R	DAL, SHA, TEP
RWR80#11R1%&	11.1	2	S, W, N, Z	B, D	S	P, R	DAL, SHA, TEP
RWR80#11R3%&	11.3	2	S, W, N, Z	B, D, F	S	P, R	DAL, SHA, TEP
RWR80#11R4%&	11.4	2	S, W, N, Z	B, D	S	P, R	DAL, SHA, TEP
RWR80#11R5%&	11.5	2	S, W, N, Z	B, D, F	S	P, R	DAL, SHA, TEP
RWR80#11R7%&	11.7	2	S, W, N, Z	B, D	S	P, R	DAL, SHA, TEP
RWR80#11R8%&	11.8	2	S, W, N, Z	B, D, F	S	P, R	DAL, SHA, TEP
RWR80#12R0%&	12.0	2	S, W, N, Z	B, D	S	P, R	DAL, SHA, TEP
RWR80#12R1%&	12.1	2	S, W, N, Z	B, D, F	S	P, R	DAL, SHA, TEP
RWR80#12R3%&	12.3	2	S, W, N, Z	B, D	S	P, R	DAL, SHA, TEP
RWR80#12R4%&	12.4	2	S, W, N, Z	B, D, F	S	P, R	DAL, SHA, TEP
RWR80#12R6%&	12.6	2	S, W, N, Z	B, D	S	P, R	DAL, SHA, TEP
RWR80#12R7%&	12.7	2	S, W, N, Z	B, D, F	S	P, R	DAL, SHA, TEP
RWR80#12R9%&	12.9	2	S, W, N, Z	B, D	S	P, R	DAL, SHA, TEP
	Resistance	Power	Terminal	Resistance	Level 1	Level 2	
Part Number	Value (Ohms)	Rating (W)	Characteristic (#)	Tolerance (%)	(FRL)(&)	(FRL)(&)	Manufacturer
RWR80#13R0%&	13.0	2	S, W, N, Z	B, D, F	S	P, R	DAL, SHA, TEP
RWR80#13R2%&	13.2	2	S, W, N, Z	B, D	S	P, R	DAL, SHA, TEP
RWR80#13R3%&	13.3	2	S, W, N, Z	B, D, F	S	P, R	DAL, SHA, TEP
RWR80#13R5%&	13.5	2	S, W, N, Z	B, D	S	P, R	DAL, SHA, TEP
RWR80#13R7%&	13.7	2	S, W, N, Z	B, D, F	S	P, R	DAL, SHA, TEP
RWR80#13R8%&	13.8	2	S, W, N, Z	B, D	S	P, R	DAL, SHA, TEP
RWR80#14R0%&	14.0	2	S, W, N, Z	B, D, F	S	P, R	DAL, SHA, TEP
RWR80#14R2%&	14.2	2	S, W, N, Z	B, D	S	P, R	DAL, SHA, TEP
RWR80#14R3%&	14.3	2	S, W, N, Z	B, D, F	S	P, R	DAL, SHA, TEP
RWR80#14R5%&	14.5	2	S, W, N, Z	B, D	S	P, R	DAL, SHA, TEP
RWR80#14R7%&	14.7	2	S, W, N, Z	B, D, F	S	P, R	DAL, SHA, TEP
RWR80#14R9%&	14.9	2	S, W, N, Z	B, D	S	P, R	DAL, SHA, TEP
RWR80#15R0%&	15.0	2	S, W, N, Z	B, D, F	S	P, R	DAL, SHA, TEP
RWR80#15R2%&	15.2	2	S, W, N, Z	B, D	S	P, R	DAL, SHA, TEP
	Resistance	Power	Terminal	Resistance	Level 1	Level 2	
Part Number	Value (Ohms)	Rating (W)	Characteristic (#)	Tolerance (%)	(FRL)(&)	(FRL)(&)	Manufacturer
RWR80#15R4%&	15.4	2	S, W, N, Z	B, D, F	S	P, R	DAL, SHA, TEP
RWR80#15R6%&	15.6	2	S, W, N, Z	B, D	S	P, R	DAL, SHA, TEP
RWR80#15R8%&	15.8	2	S, W, N, Z	B, D, F	S	P, R	DAL, SHA, TEP
RWR80#16R0%&	16.0	2	S, W, N, Z	B, D	S	P, R	DAL, SHA, TEP
RWR80#16R2%&	16.2	2	S, W, N, Z	B, D, F	S	P, R	DAL, SHA, TEP
RWR80#16R4%&	16.4	2	S, W, N, Z	B, D	S	P, R	DAL, SHA, TEP

RWR80#16R5%&	16.5	2	S, W, N, Z	B, D, F	S	P, R	DAL, SHA, TEP
RWR80#16R7%&	16.7	2	S, W, N, Z	B, D	S	P, R	DAL, SHA, TEP
RWR80#16R9%&	16.9	2	S, W, N, Z	B, D, F	S	P, R	DAL, SHA, TEP
RWR80#17R2%&	17.2	2	S, W, N, Z	B, D	S	P, R	DAL, SHA, TEP
RWR80#17R4%&	17.4	2	S, W, N, Z	B, D, F	S	P, R	DAL, SHA, TEP
RWR80#17R6%&	17.6	2	S, W, N, Z	B, D	S	P, R	DAL, SHA, TEP
RWR80#17R8%&	17.8	2	S, W, N, Z	B, D, F	S	P, R	DAL, SHA, TEP
RWR80#18R0%&	18.0	2	S, W, N, Z	B, D, F	S	P, R	DAL, SHA, TEP
	Resistance	Power	Terminal	Resistance	Level 1	Level 2	
Part Number	Value (Ohms)	Rating (W)	Characteristic (#)	Tolerance (%)	(FRL)(&)	(FRL)(&)	Manufacturer
RWR80#18R2%&	18.2	2	S, W, N, Z	B, D, F	S	P, R	DAL, SHA, TEP
RWR80#18R4%&	18.4	2	S, W, N, Z	B, D	S	P, R	DAL, SHA, TEP
RWR80#18R7%&	18.7	2	S, W, N, Z	B, D, F	S	P, R	DAL, SHA, TEP
RWR80#18R9%&	18.9	2	S, W, N, Z	B, D	S	P, R	DAL, SHA, TEP
RWR80#19R1%&	19.1	2	S, W, N, Z	B, D, F	S	P, R	DAL, SHA, TEP
RWR80#19R3%&	19.3	2	S, W, N, Z	B, D	S	P, R	DAL, SHA, TEP
RWR80#19R6%&	19.6	2	S, W, N, Z	B, D, F	S	P, R	DAL, SHA, TEP
RWR80#19R8%&	19.8	2	S, W, N, Z	B, D	S	P, R	DAL, SHA, TEP
RWR80#20R0%&	20.0	2	S, W, N, Z	B, D, F	S	P, R	DAL, SHA, TEP
RWR80#20R3%&	20.3	2	S, W, N, Z	B, D	S	P, R	DAL, SHA, TEP
RWR80#20R5%&	20.5	2	S, W, N, Z	B, D, F	S	P, R	DAL, SHA, TEP
RWR80#20R8%&	20.8	2	S, W, N, Z	B, D	S	P, R	DAL, SHA, TEP
RWR80#21R0%&	21.0	2	S, W, N, Z	B, D, F	S	P, R	DAL, SHA, TEP
RWR80#21R3%&	21.3	2	S, W, N, Z	B, D	S	P, R	DAL, SHA, TEP
	Resistance	Power	Terminal	Resistance	Level 1	Level 2	
Part Number	Value (Ohms)	Rating (W)	Characteristic (#)	Tolerance (%)	(FRL)(&)	(FRL)(&)	Manufacturer
RWR80#21R5%&	21.5	2	S, W, N, Z	B, D, F	S	P, R	DAL, SHA, TEP
RWR80#21R8%&	21.8	2	S, W, N, Z	B, D	S	P, R	DAL, SHA, TEP
RWR80#22R1%&	22.1	2	S, W, N, Z	B, D, F	S	P, R	DAL, SHA, TEP
RWR80#22R3%&	22.3	2	S, W, N, Z	B, D	S	P, R	DAL, SHA, TEP
RWR80#22R6%&	22.6	2	S, W, N, Z	B, D, F	S	P, R	DAL, SHA, TEP
RWR80#22R9%&	22.9	2	S, W, N, Z	B, D	S	P, R	DAL, SHA, TEP
RWR80#23R2%&	23.2	2	S, W, N, Z	B, D, F	S	P, R	DAL, SHA, TEP
RWR80#23R4%&	23.4	2	S, W, N, Z	B, D	S	P, R	DAL, SHA, TEP
RWR80#23R7%&	23.7	2	S, W, N, Z	B, D, F	S	P, R	DAL, SHA, TEP
RWR80#24R0%&	24.0	2	S, W, N, Z	B, D	S	P, R	DAL, SHA, TEP
RWR80#24R3%&	24.3	2	S, W, N, Z	B, D, F	S	P, R	DAL, SHA, TEP
RWR80#24R6%&	24.6	2	S, W, N, Z	B, D	S	P, R	DAL, SHA, TEP
	Resistance	Power	Terminal	Resistance	Level 1	Level 2	
Part Number	Value (Ohms)	Rating (W)	Characteristic (#)	Tolerance (%)	(FRL)(&)	(FRL)(&)	Manufacturer
RWR80#24R9%&	24.9	2	S, W, N, Z	B, D, F	S	P, R	DAL, SHA, TEP
RWR80#25R2%&	25.2	2	S, W, N, Z	B, D	S	P, R	DAL, SHA, TEP
RWR80#25R5%&	25.5	2	S, W, N, Z	B, D, F	S	P, R	DAL, SHA, TEP
RWR80#25R8%&	25.8	2	S, W, N, Z	B, D	S	P, R	DAL, SHA, TEP
RWR80#26R1%&	26.1	2	S, W, N, Z	B, D, F	S	P, R	DAL, SHA, TEP
RWR80#26R4%&	26.4	2	S, W, N, Z	B, D	S	P, R	DAL, SHA, TEP
RWR80#26R7%&	26.7	2	S, W, N, Z	B, D, F	S	P, R	DAL, SHA, TEP

RWR80#27R1%&	27.1	2	S, W, N, Z	B, D	S	P, R	DAL, SHA, TEP
RWR80#27R4%&	27.4	2	S, W, N, Z	B, D, F	S	P, R	DAL, SHA, TEP
RWR80#27R7%&	27.7	2	S, W, N, Z	B, D	S	P, R	DAL, SHA, TEP
RWR80#28R0%&	28.0	2	S, W, N, Z	B, D, F	S	P, R	DAL, SHA, TEP
RWR80#28R4%&	28.4	2	S, W, N, Z	B, D	S	P, R	DAL, SHA, TEP
RWR80#28R7%&	28.7	2	S, W, N, Z	B, D, F	S	P, R	DAL, SHA, TEP
RWR80#29R1%&	29.1	2	S, W, N, Z	B, D	S	P, R	DAL, SHA, TEP
	Resistance	Power	Terminal	Resistance	Level 1	Level 2	
Part Number	Value (Ohms)	Rating (W)	Characteristic (#)	Tolerance (%)	(FRL)(&)	(FRL)(&)	Manufacturer
RWR80#29R4%&	29.4	2	S, W, N, Z	B, D, F	S	P, R	DAL, SHA, TEP
RWR80#29R8%&	29.8	2	S, W, N, Z	B, D	S	P, R	DAL, SHA, TEP
RWR80#30R1%&	30.1	2	S, W, N, Z	B, D, F	S	P, R	DAL, SHA, TEP
RWR80#30R5%&	30.5	2	S, W, N, Z	B, D	S	P, R	DAL, SHA, TEP
RWR80#30R9%&	30.9	2	S, W, N, Z	B, D, F	S	P, R	DAL, SHA, TEP
RWR80#31R2%&	31.2	2	S, W, N, Z	B, D	S	P, R	DAL, SHA, TEP
RWR80#31R6%&	31.6	2	S, W, N, Z	B, D, F	S	P, R	DAL, SHA, TEP
RWR80#32R0%&	32.0	2	S, W, N, Z	B, D	S	P, R	DAL, SHA, TEP
RWR80#32R4%&	32.4	2	S, W, N, Z	B, D, F	S	P, R	DAL, SHA, TEP
RWR80#32R8%&	32.8	2	S, W, N, Z	B, D	S	P, R	DAL, SHA, TEP
RWR80#33R2%&	33.2	2	S, W, N, Z	B, D, F	S	P, R	DAL, SHA, TEP
RWR80#33R6%&	33.6	2	S, W, N, Z	B, D	S	P, R	DAL, SHA, TEP
RWR80#34R0%&	34.0	2	S, W, N, Z	B, D, F	S	P, R	DAL, SHA, TEP
RWR80#34R4%&	34.4	2	S, W, N, Z	B, D	S	P, R	DAL, SHA, TEP
	Resistance	Power	Terminal	Resistance	Level 1	Level 2	
Part Number	Value (Ohms)	Rating (W)	Characteristic (#)	Tolerance (%)	(FRL)(&)	(FRL)(&)	Manufacturer
RWR80#34R8%&	34.8	2	S, W, N, Z	B, D, F	S	P, R	DAL, SHA, TEP
RWR80#35R2%&	35.2	2	S, W, N, Z	B, D	S	P, R	DAL, SHA, TEP
RWR80#35R7%&	35.7	2	S, W, N, Z	B, D, F	S	P, R	DAL, SHA, TEP
RWR80#36R1%&	36.1	2	S, W, N, Z	B, D	S	P, R	DAL, SHA, TEP
RWR80#36R5%&	36.5	2	S, W, N, Z	B, D, F	S	P, R	DAL, SHA, TEP
RWR80#37R0%&	37.0	2	S, W, N, Z	B, D	S	P, R	DAL, SHA, TEP
RWR80#37R4%&	37.4	2	S, W, N, Z	B, D, F	S	P, R	DAL, SHA, TEP
RWR80#37R9%&	37.9	2	S, W, N, Z	B, D	S	P, R	DAL, SHA, TEP
RWR80#38R3%&	38.3	2	S, W, N, Z	B, D, F	S	P, R	DAL, SHA, TEP
RWR80#38R8%&	38.8	2	S, W, N, Z	B, D	S	P, R	DAL, SHA, TEP
RWR80#39R2%&	39.2	2	S, W, N, Z	B, D, F	S	P, R	DAL, SHA, TEP
RWR80#39R7%&	39.7	2	S, W, N, Z	B, D	S	P, R	DAL, SHA, TEP
RWR80#40R2%&	40.2	2	S, W, N, Z	B, D, F	S	P, R	DAL, SHA, TEP
RWR80#40R7%&	40.7	2	S, W, N, Z	B, D	S	P, R	DAL, SHA, TEP
	Resistance	Power	Terminal	Resistance	Level 1	Level 2	
Part Number	Value (Ohms)	Rating (W)	Characteristic (#)	Tolerance (%)	(FRL)(&)	(FRL)(&)	Manufacturer
RWR80#41R2%&	41.2	2	S, W, N, Z	B, D, F	S	P, R	DAL, SHA, TEP
RWR80#41R7%&	41.7	2	S, W, N, Z	B, D	S	P, R	DAL, SHA, TEP
RWR80#42R2%&	42.2	2	S, W, N, Z	B, D, F	S	P, R	DAL, SHA, TEP
RWR80#42R7%&	42.7	2	S, W, N, Z	B, D	S	P, R	DAL, SHA, TEP
RWR80#43R2%&	43.2	2	S, W, N, Z	B, D, F	S	P, R	DAL, SHA, TEP
RWR80#43R7%&	43.7	2	S, W, N, Z	B, D	S	P, R	DAL, SHA, TEP

RWR80#44R2%&	44.2	2	S, W, N, Z	B, D, F	S	P, R	DAL, SHA, TEP
RWR80#44R8%&	44.8	2	S, W, N, Z	B, D	S	P, R	DAL, SHA, TEP
RWR80#45R3%&	45.3	2	S, W, N, Z	B, D, F	S	P, R	DAL, SHA, TEP
RWR80#45R9%&	45.9	2	S, W, N, Z	B, D	S	P, R	DAL, SHA, TEP
RWR80#46R4%&	46.4	2	S, W, N, Z	B, D, F	S	P, R	DAL, SHA, TEP
RWR80#47R0%&	47.0	2	S, W, N, Z	B, D	S	P, R	DAL, SHA, TEP
RWR80#47R5%&	47.5	2	S, W, N, Z	B, D, F	S	P, R	DAL, SHA, TEP
RWR80#48R1%&	48.1	2	S, W, N, Z	B, D	S	P, R	DAL, SHA, TEP
	Resistance	Power	Terminal	Resistance	Level 1	Level 2	
Part Number	Value (Ohms)	Rating (W)	Characteristic (#)	Tolerance (%)	(FRL)(&)	(FRL)(&)	Manufacturer
RWR80#48R7%&	48.7	2	S, W, N, Z	B, D, F	S	P, R	DAL, SHA, TEP
RWR80#49R3%&	49.3	2	S, W, N, Z	B, D	S	P, R	DAL, SHA, TEP
RWR80#49R9%&	49.9	2	S, W, N, Z	B, D, F	S	P, R	DAL, SHA, TEP
RWR80#50R5%&	50.5	2	S, W, N, Z	B, D	S	P, R	DAL, SHA, TEP
RWR80#51R1%&	51.1	2	S, W, N, Z	B, D, F	S	P, R	DAL, SHA, TEP
RWR80#51R7%&	51.7	2	S, W, N, Z	B, D	S	P, R	DAL, SHA, TEP
RWR80#52R3%&	52.3	2	S, W, N, Z	B, D, F	S	P, R	DAL, SHA, TEP
RWR80#53R0%&	53.0	2	S, W, N, Z	B, D	S	P, R	DAL, SHA, TEP
RWR80#53R6%&	53.6	2	S, W, N, Z	B, D, F	S	P, R	DAL, SHA, TEP
RWR80#54R2%&	54.2	2	S, W, N, Z	B, D	S	P, R	DAL, SHA, TEP
RWR80#54R9%&	54.9	2	S, W, N, Z	B, D, F	S	P, R	DAL, SHA, TEP
RWR80#55R6%&	55.6	2	S, W, N, Z	B, D	S	P, R	DAL, SHA, TEP
	Resistance	Power	Terminal	Resistance	Level 1	Level 2	
Part Number	Value (Ohms)	Rating (W)	Characteristic (#)	Tolerance (%)	(FRL)(&)	(FRL)(&)	Manufacturer
RWR80#56R2%&	56.2	2	S, W, N, Z	B, D, F	S	P, R	DAL, SHA, TEP
RWR80#56R9%&	56.9	2	S, W, N, Z	B, D	S	P, R	DAL, SHA, TEP
RWR80#57R6%&	57.6	2	S, W, N, Z	B, D, F	S	P, R	DAL, SHA, TEP
RWR80#58R3%&	58.3	2	S, W, N, Z	B, D	S	P, R	DAL, SHA, TEP
RWR80#59R0%&	59.0	2	S, W, N, Z	B, D, F	S	P, R	DAL, SHA, TEP
RWR80#59R7%&	59.7	2	S, W, N, Z	B, D	S	P, R	DAL, SHA, TEP
RWR80#60R4%&	60.4	2	S, W, N, Z	B, D, F	S	P, R	DAL, SHA, TEP
RWR80#61R2%&	61.2	2	S, W, N, Z	B, D	S	P, R	DAL, SHA, TEP
RWR80#61R9%&	61.9	2	S, W, N, Z	B, D, F	S	P, R	DAL, SHA, TEP
RWR80#62R6%&	62.6	2	S, W, N, Z	B, D	S	P, R	DAL, SHA, TEP
RWR80#63R4%&	63.4	2	S, W, N, Z	B, D, F	S	P, R	DAL, SHA, TEP
RWR80#64R2%&	64.2	2	S, W, N, Z	B, D	S	P, R	DAL, SHA, TEP
RWR80#64R9%&	64.9	2	S, W, N, Z	B, D, F	S	P, R	DAL, SHA, TEP
RWR80#65R7%&	65.7	2	S, W, N, Z	B, D	S	P, R	DAL, SHA, TEP
	Resistance	Power	Terminal	Resistance	Level 1	Level 2	
Part Number	Value (Ohms)	Rating (W)	Characteristic (#)	Tolerance (%)	(FRL)(&)	(FRL)(&)	Manufacturer
RWR80#66R5%&	66.5	2	S, W, N, Z	B, D, F	S	P, R	DAL, SHA, TEP
RWR80#67R3%&	67.3	2	S, W, N, Z	B, D	S	P, R	DAL, SHA, TEP
RWR80#68R1%&	68.1	2	S, W, N, Z	B, D, F	S	P, R	DAL, SHA, TEP
RWR80#69R0%&	69.0	2	S, W, N, Z	B, D	S	P, R	DAL, SHA, TEP
RWR80#69R8%&	69.8	2	S, W, N, Z	B, D, F	S	P, R	DAL, SHA, TEP
RWR80#70R6%&	70.6	2	S, W, N, Z	B, D	S	P, R	DAL, SHA, TEP
RWR80#71R5%&	71.5	2	S, W, N, Z	B, D, F	S	P, R	DAL, SHA, TEP

RWR80#72R3%&	72.3	2	S, W, N, Z	B, D	S	P, R	DAL, SHA, TEP
RWR80#73R2%&	73.2	2	S, W, N, Z	B, D, F	S	P, R	DAL, SHA, TEP
RWR80#74R1%&	74.1	2	S, W, N, Z	B, D	S	P, R	DAL, SHA, TEP
RWR80#75R0%&	75.0	2	S, W, N, Z	B, D, F	S	P, R	DAL, SHA, TEP
RWR80#75R9%&	75.9	2	S, W, N, Z	B, D	S	P, R	DAL, SHA, TEP
RWR80#76R8%&.	76.8	2	S, W, N, Z	B, D, F	S	P, R	DAL, SHA, TEP
	Resistance	Power	Terminal	Resistance	Level 1	Level 2	
Part Number	Value (Ohms)	Rating (W)	Characteristic (#)	Tolerance (%)	(FRL)(&)	(FRL)(&)	Manufacturer
RWR78#77R7%&.	77.7	2	S, W, N, Z	B, D	S	P, R	DAL, SHA, TEP
RWR80#78R7%&	78.7	2	S, W, N, Z	B, D, F	S	P, R	DAL, SHA, TEP
RWR80#79R6%&	79.6	2	S, W, N, Z	B, D	S	P, R	DAL, SHA, TEP
RWR80#80RR6%&	80.6	2	S, W, N, Z	B, D, F	S	P, R	DAL, SHA, TEP
RWR80#81R6%&	81.6	2	S, W, N, Z	B, D	S	P, R	DAL, SHA, TEP
RWR80#82R5%&	82.5	2	S, W, N, Z	B, D, F	S	P, R	DAL, SHA, TEP
RWR80#83R5%&	83.5	2	S, W, N, Z	B, D	S	P, R	DAL, SHA, TEP
RWR80#84R5%&	84.5	2	S, W, N, Z	B, D, F	S	P, R	DAL, SHA, TEP
RWR80#85R6%&	85.6	2	S, W, N, Z	B, D	S	P, R	DAL, SHA, TEP
RWR80#86R6%&	86.6	2	S, W, N, Z	B, D, F	S	P, R	DAL, SHA, TEP
RWR80#87R6%&	87.6	2	S, W, N, Z	B, D	S	P, R	DAL, SHA, TEP
RWR80#88R7%&	88.7	2	S, W, N, Z	B, D, F	S	P, R	DAL, SHA, TEP
	Resistance	Power	Terminal	Resistance	Level 1	Level 2	
Part Number	Value (Ohms)	Rating (W)	Characteristic (#)	Tolerance (%)	(FRL)(&)	(FRL)(&)	Manufacturer
RWR80#89R8%&	89.8	2	S, W, N, Z	B, D	S	P, R	DAL, SHA, TEP
RWR80#90R9%&	90.9	2	S, W, N, Z	B, D, F	S	P, R	DAL, SHA, TEP
RWR80#92R0%&	92.0	2	S, W, N, Z	B, D	S	P, R	DAL, SHA, TEP
RWR80#93R1%&	93.1	2	S, W, N, Z	B, D, F	S	P, R	DAL, SHA, TEP
RWR80#94R2%&	94.2	2	S, W, N, Z	B, D	S	P, R	DAL, SHA, TEP
RWR80#95R3%&	95.3	2	S, W, N, Z	B, D, F	S	P, R	DAL, SHA, TEP
RWR80#96R5%&	96.5	2	S, W, N, Z	B, D	S	P, R	DAL, SHA, TEP
RWR80#97R6%&	97.6	2	S, W, N, Z	B, D, F	S	P, R	DAL, SHA, TEP
RWR80#98R8%&	98.8	2	S, W, N, Z	B, D	S	P, R	DAL, SHA, TEP
	Resistance	Power	Terminal	Resistance	Level 1	Level 2	
Part Number	Value (Ohms)	Rating (W)	Characteristic (#)	Tolerance (%)	(FRL)(&)	(FRL)(&)	Manufacturer

RWR80 Wirewound Resistors: 100 Ohms through 988 Ohms

	Resistance	Power	Terminal	Resistance	Level 1	Level 2	
Part Number	Value (Ohms)	Rating (W)	Characteristic (#)	Tolerance (%)	(FRL)(&)	(FRL)(&)	Manufacturer
RWR80#1000%&	100	2	S, W, N, Z	B, D, F	S	P, R	DAL, SHA, TEP
RWR80#1010%&	101	2	S, W, N, Z	B, D	S	P, R	DAL, SHA, TEP
RWR80#1020%&	102	2	S, W, N, Z	B, D, F	S	P, R	DAL, SHA, TEP
RWR80#1040%&	104	2	S, W, N, Z	B, D	S	P, R	DAL, SHA, TEP
RWR80#1050%&	105	2	S, W, N, Z	B, D, F	S	P, R	DAL, SHA, TEP
RWR80#1060%&	106	2	S, W, N, Z	B, D	S	P, R	DAL, SHA, TEP
RWR80#1070%&	107	2	S, W, N, Z	B, D, F	S	P, R	DAL, SHA, TEP

RWR80#1090%&	109	2	S, W, N, Z	B, D	S	P, R	DAL, SHA, TEP
	Resistance	Power	Terminal	Resistance	Level 1	Level 2	
Part Number	Value (Ohms)	Rating (W)	Characteristic (#)	Tolerance (%)	(FRL)(&)	(FRL)(&)	Manufacturer
RWR80#1100%&	110	2	S, W, N, Z	B, D, F	S	P, R	DAL, SHA, TEP
RWR80#1110%&	111	2	S, W, N, Z	B, D	S	P, R	DAL, SHA, TEP
RWR80#1130%&	113	2	S, W, N, Z	B, D, F	S	P, R	DAL, SHA, TEP
RWR80#1140%&	114	2	S, W, N, Z	B, D	S	P, R	DAL, SHA, TEP
RWR80#1150%&	115	2	S, W, N, Z	B, D, F	S	P, R	DAL, SHA, TEP
RWR80#1170%&	117	2	S, W, N, Z	B, D	S	P, R	DAL, SHA, TEP
RWR80#1180#&	118	2	S, W, N, Z	B, D, F	S	P, R	DAL, SHA, TEP
RWR80#1200%&	120	2	S, W, N, Z	B, D	S	P, R	DAL, SHA, TEP
RWR80#1210%&	121	2	S, W, N, Z	B, D, F	S	P, R	DAL, SHA, TEP
RWR80#1230%&	123	2	S, W, N, Z	B, D	S	P, R	DAL, SHA, TEP
RWR80#1240%&	124	2	S, W, N, Z	B, D, F	S	P, R	DAL, SHA, TEP
RWR80#1260%&	126	2	S, W, N, Z	B, D	S	P, R	DAL, SHA, TEP
RWR80#1270%&	127	2	S, W, N, Z	B, D, F	S	P, R	DAL, SHA, TEP
RWR80#1290%&	129	2	S, W, N, Z	B, D	S	P, R	DAL, SHA, TEP
	Resistance	Power	Terminal	Resistance	Level 1	Level 2	
Part Number	Value (Ohms)	Rating (W)	Characteristic (#)	Tolerance (%)	(FRL)(&)	(FRL)(&)	Manufacturer
RWR80#1300%&	130	2	S, W, N, Z	B, D, F	S	P, R	DAL, SHA, TEP
RWR80#1320%&	132	2	S, W, N, Z	B, D	S	P, R	DAL, SHA, TEP
RWR80#1330%&	133	2	S, W, N, Z	B, D, F	S	P, R	DAL, SHA, TEP
RWR80#1350%&	135	2	S, W, N, Z	B, D	S	P, R	DAL, SHA, TEP
RWR80#1370%&	137	2	S, W, N, Z	B, D, F	S	P, R	DAL, SHA, TEP
RWR80#1380#&	138	2	S, W, N, Z	B, D	S	P, R	DAL, SHA, TEP
RWR80#1400%&	140	2	S, W, N, Z	B, D, F	S	P, R	DAL, SHA, TEP
RWR80#1420%&	142	2	S, W, N, Z	B, D	S	P, R	DAL, SHA, TEP
RWR80#1430%&	143	2	S, W, N, Z	B, D, F	S	P, R	DAL, SHA, TEP
RWR80#1450%&	145	2	S, W, N, Z	B, D	S	P, R	DAL, SHA, TEP
RWR80#1470%&	147	2	S, W, N, Z	B, D, F	S	P, R	DAL, SHA, TEP
RWR80#1490%&	149	2	S, W, N, Z	B, D	S	P, R	DAL, SHA, TEP
RWR80#1500%&	150	2	S, W, N, Z	B, D, F	S	P, R	DAL, SHA, TEP
RWR80#1520%&	152	2	S, W, N, Z	B, D	S	P, R	DAL, SHA, TEP
	Resistance	Power	Terminal	Resistance	Level 1	Level 2	
Part Number	Value (Ohms)	Rating (W)	Characteristic (#)	Tolerance (%)	(FRL)(&)	(FRL)(&)	Manufacturer
RWR80#1540%&	154	2	S, W, N, Z	B, D, F	S	P, R	DAL, SHA, TEP
RWR80#1560%&	156	2	S, W, N, Z	B, D	S	P, R	DAL, SHA, TEP
RWR80#1580#&	158	2	S, W, N, Z	B, D, F	S	P, R	DAL, SHA, TEP
RWR80#1600%&	160	2	S, W, N, Z	B, D	S	P, R	DAL, SHA, TEP
RWR80#1620%&	162	2	S, W, N, Z	B, D, F	S	P, R	DAL, SHA, TEP
RWR80#1640%&	164	2	S, W, N, Z	B, D	S	P, R	DAL, SHA, TEP
RWR80#1650%&	165	2	S, W, N, Z	B, D, F	S	P, R	DAL, SHA, TEP
RWR80#1670%&	167	2	S, W, N, Z	B, D	S	P, R	DAL, SHA, TEP
RWR80#1690%&	169	2	S, W, N, Z	B, D, F	S	P, R	DAL, SHA, TEP
RWR80#1720%&	172	2	S, W, N, Z	B, D	S	P, R	DAL, SHA, TEP
RWR80#1740%&	174	2	S, W, N, Z	B, D, F	S	P, R	DAL, SHA, TEP
RWR80#1760%&	176	2	S, W, N, Z	B, D	S	P, R	DAL, SHA, TEP

RWR80#1780#&	178	2	S, W, N, Z	B, D, F	S	P, R	DAL, SHA, TEP
RWR80#1800%&	180	2	S, W, N, Z	B, D, F	S	P, R	DAL, SHA, TEP
	Resistance	Power	Terminal	Resistance	Level 1	Level 2	
Part Number	Value (Ohms)	Rating (W)	Characteristic (#)	Tolerance (%)	(FRL)(&)	(FRL)(&)	Manufacturer
RWR80#1820%&	182	2	S, W, N, Z	B, D, F	S	P, R	DAL, SHA, TEP
RWR80#1840%&	184	2	S, W, N, Z	B, D	S	P, R	DAL, SHA, TEP
RWR80#1870%&	187	2	S, W, N, Z	B, D, F	S	P, R	DAL, SHA, TEP
RWR80#1890%&	189	2	S, W, N, Z	B, D	S	P, R	DAL, SHA, TEP
RWR80#1910%&	191	2	S, W, N, Z	B, D, F	S	P, R	DAL, SHA, TEP
RWR80#1930%&	193	2	S, W, N, Z	B, D	S	P, R	DAL, SHA, TEP
RWR80#1960%&	196	2	S, W, N, Z	B, D, F	S	P, R	DAL, SHA, TEP
RWR80#1980#&	198	2	S, W, N, Z	B, D	S	P, R	DAL, SHA, TEP
RWR80#2000%&	200	2	S, W, N, Z	B, D, F	S	P, R	DAL, SHA, TEP
RWR80#2030%&	203	2	S, W, N, Z	B, D	S	P, R	DAL, SHA, TEP
RWR80#2050%&	205	2	S, W, N, Z	B, D, F	S	P, R	DAL, SHA, TEP
RWR80#2080#&	208	2	S, W, N, Z	B, D	S	P, R	DAL, SHA, TEP
RWR80#2100%&	210	2	S, W, N, Z	B, D, F	S	P, R	DAL, SHA, TEP
RWR80#2130%&	213	2	S, W, N, Z	B, D	S	P, R	DAL, SHA, TEP
	Resistance	Power	Terminal	Resistance	Level 1	Level 2	
Part Number	Value (Ohms)	Rating (W)	Characteristic (#)	Tolerance (%)	(FRL)(&)	(FRL)(&)	Manufacturer
RWR80#2150%&	215	2	S, W, N, Z	B, D, F	S	P, R	DAL, SHA, TEP
RWR80#2180#&	218	2	S, W, N, Z	B, D	S	P, R	DAL, SHA, TEP
RWR80#2210%&	221	2	S, W, N, Z	B, D, F	S	P, R	DAL, SHA, TEP
RWR80#2230%&	223	2	S, W, N, Z	B, D	S	P, R	DAL, SHA, TEP
RWR80#2260%&	226	2	S, W, N, Z	B, D, F	S	P, R	DAL, SHA, TEP
RWR80#2290%&	229	2	S, W, N, Z	B, D	S	P, R	DAL, SHA, TEP
RWR80#2320%&	232	2	S, W, N, Z	B, D, F	S	P, R	DAL, SHA, TEP
RWR80#2340%&	234	2	S, W, N, Z	B, D	S	P, R	DAL, SHA, TEP
RWR80#2370%&	237	2	S, W, N, Z	B, D, F	S	P, R	DAL, SHA, TEP
RWR80#2400%&	240	2	S, W, N, Z	B, D	S	P, R	DAL, SHA, TEP
RWR80#2430%&	243	2	S, W, N, Z	B, D, F	S	P, R	DAL, SHA, TEP
RWR80#2460%&	246	2	S, W, N, Z	B, D	S	P, R	DAL, SHA, TEP
	Resistance	Power	Terminal	Resistance	Level 1	Level 2	
Part Number	Value (Ohms)	Rating (W)	Characteristic (#)	Tolerance (%)	(FRL)(&)	(FRL)(&)	Manufacturer
RWR80#2490%&	249	2	S, W, N, Z	B, D, F	S	P, R	DAL, SHA, TEP
RWR80#2520%&	252	2	S, W, N, Z	B, D	S	P, R	DAL, SHA, TEP
RWR80#2550%&	255	2	S, W, N, Z	B, D, F	S	P, R	DAL, SHA, TEP
RWR80#2580#&	258	2	S, W, N, Z	B, D	S	P, R	DAL, SHA, TEP
RWR80#2610%&	261	2	S, W, N, Z	B, D, F	S	P, R	DAL, SHA, TEP
RWR80#2640%&	264	2	S, W, N, Z	B, D	S	P, R	DAL, SHA, TEP
RWR80#2670%&	267	2	S, W, N, Z	B, D, F	S	P, R	DAL, SHA, TEP
RWR80#2710%&	271	2	S, W, N, Z	B, D	S	P, R	DAL, SHA, TEP
RWR80#2740%&	274	2	S, W, N, Z	B, D, F	S	P, R	DAL, SHA, TEP
RWR80#2770%&	277	2	S, W, N, Z	B, D	S	P, R	DAL, SHA, TEP
RWR80#2800%&	280	2	S, W, N, Z	B, D, F	S	P, R	DAL, SHA, TEP
RWR80#2840%&	284	2	S, W, N, Z	B, D	S	P, R	DAL, SHA, TEP
RWR80#2870%&	287	2	S, W, N, Z	B, D, F	S	P, R	DAL, SHA, TEP

RWR80#2910%&	291	2	S, W, N, Z	B, D	S	P, R	DAL, SHA, TEP
	Resistance	Power	Terminal	Resistance	Level 1	Level 2	
Part Number	Value (Ohms)	Rating (W)	Characteristic (#)	Tolerance (%)	(FRL)(&)	(FRL)(&)	Manufacturer
RWR80#2940%&	294	2	S, W, N, Z	B, D, F	S	P, R	DAL, SHA, TEP
RWR80#2980#&	298	2	S, W, N, Z	B, D	S	P, R	DAL, SHA, TEP
RWR80#3010%&	301	2	S, W, N, Z	B, D, F	S	P, R	DAL, SHA, TEP
RWR80#3050%&	305	2	S, W, N, Z	B, D	S	P, R	DAL, SHA, TEP
RWR80#3090%&	309	2	S, W, N, Z	B, D, F	S	P, R	DAL, SHA, TEP
RWR80#3120%&	312	2	S, W, N, Z	B, D	S	P, R	DAL, SHA, TEP
RWR80#3160%&	316	2	S, W, N, Z	B, D, F	S	P, R	DAL, SHA, TEP
RWR80#3200%&	320	2	S, W, N, Z	B, D	S	P, R	DAL, SHA, TEP
RWR80#3240%&	324	2	S, W, N, Z	B, D, F	S	P, R	DAL, SHA, TEP
RWR80#3280#&	328	2	S, W, N, Z	B, D	S	P, R	DAL, SHA, TEP
RWR80#3320%&	332	2	S, W, N, Z	B, D, F	S	P, R	DAL, SHA, TEP
RWR80#3360%&	336	2	S, W, N, Z	B, D	S	P, R	DAL, SHA, TEP
RWR80#3400%&	340	2	S, W, N, Z	B, D, F	S	P, R	DAL, SHA, TEP
RWR80#3440%&	344	2	S, W, N, Z	B, D	S	P, R	DAL, SHA, TEP
	Resistance	Power	Terminal	Resistance	Level 1	Level 2	
Part Number	Value (Ohms)	Rating (W)	Characteristic (#)	Tolerance (%)	(FRL)(&)	(FRL)(&)	Manufacturer
RWR80#3480#&	348	2	S, W, N, Z	B, D, F	S	P, R	DAL, SHA, TEP
RWR80#3520%&	352	2	S, W, N, Z	B, D	S	P, R	DAL, SHA, TEP
RWR80#3570%&	357	2	S, W, N, Z	B, D, F	S	P, R	DAL, SHA, TEP
RWR80#3610%&	361	2	S, W, N, Z	B, D	S	P, R	DAL, SHA, TEP
RWR80#3650%&	365	2	S, W, N, Z	B, D, F	S	P, R	DAL, SHA, TEP
RWR80#3700%&	370	2	S, W, N, Z	B, D	S	P, R	DAL, SHA, TEP
RWR80#3740%&	374	2	S, W, N, Z	B, D, F	S	P, R	DAL, SHA, TEP
RWR80#3790%&	379	2	S, W, N, Z	B, D	S	P, R	DAL, SHA, TEP
RWR80#3830%&	383	2	S, W, N, Z	B, D, F	S	P, R	DAL, SHA, TEP
RWR80#3880#&	388	2	S, W, N, Z	B, D	S	P, R	DAL, SHA, TEP
RWR80#3920%&	392	2	S, W, N, Z	B, D, F	S	P, R	DAL, SHA, TEP
RWR80#3970%&	397	2	S, W, N, Z	B, D	S	P, R	DAL, SHA, TEP
RWR80#4020%&	402	2	S, W, N, Z	B, D, F	S	P, R	DAL, SHA, TEP
RWR80#4070%&	407	2	S, W, N, Z	B, D	S	P, R	DAL, SHA, TEP
	Resistance	Power	Terminal	Resistance	Level 1	Level 2	
Part Number	Value (Ohms)	Rating (W)	Characteristic (#)	Tolerance (%)	(FRL)(&)	(FRL)(&)	Manufacturer
RWR80#4120%&	412	2	S, W, N, Z	B, D, F	S	P, R	DAL, SHA, TEP
RWR80#4170%&	417	2	S, W, N, Z	B, D	S	P, R	DAL, SHA, TEP
RWR80#4220%&	422	2	S, W, N, Z	B, D, F	S	P, R	DAL, SHA, TEP
RWR80#4270%&	427	2	S, W, N, Z	B, D	S	P, R	DAL, SHA, TEP
RWR80#4320%&	432	2	S, W, N, Z	B, D, F	S	P, R	DAL, SHA, TEP
RWR80#4370%&	437	2	S, W, N, Z	B, D	S	P, R	DAL, SHA, TEP
RWR80#4420%&	442	2	S, W, N, Z	B, D, F	S	P, R	DAL, SHA, TEP
RWR80#4480#&	448	2	S, W, N, Z	B, D	S	P, R	DAL, SHA, TEP
RWR80#4530%&	453	2	S, W, N, Z	B, D, F	S	P, R	DAL, SHA, TEP
RWR80#4590%&	459	2	S, W, N, Z	B, D	S	P, R	DAL, SHA, TEP
RWR80#4640%&	464	2	S, W, N, Z	B, D, F	S	P, R	DAL, SHA, TEP
RWR80#4700%&	470	2	S, W, N, Z	B, D	S	P, R	DAL, SHA, TEP

RWR80#4750%&	475	2	S, W, N, Z	B, D, F	S	P, R	DAL, SHA, TEP
RWR80#4810%&	481	2	S, W, N, Z	B, D	S	P, R	DAL, SHA, TEP
	Resistance	Power	Terminal	Resistance	Level 1	Level 2	
Part Number	Value (Ohms)	Rating (W)	Characteristic (#)	Tolerance (%)	(FRL)(&)	(FRL)(&)	Manufacturer
RWR80#4870%&	487	2	S, W, N, Z	B, D, F	S	P, R	DAL, SHA, TEP
RWR80#4930%&	493	2	S, W, N, Z	B, D	S	P, R	DAL, SHA, TEP
RWR80#4990%&	499	2	S, W, N, Z	B, D, F	S	P, R	DAL, SHA, TEP
RWR80#5050%&	505	2	S, W, N, Z	B, D	S	P, R	DAL, SHA, TEP
RWR80#5110%&	511	2	S, W, N, Z	B, D, F	S	P, R	DAL, SHA, TEP
RWR80#5170%&	517	2	S, W, N, Z	B, D	S	P, R	DAL, SHA, TEP
RWR80#5230%&	523	2	S, W, N, Z	B, D, F	S	P, R	DAL, SHA, TEP
RWR80#5300%&	530	2	S, W, N, Z	B, D	S	P, R	DAL, SHA, TEP
RWR80#5360%&	536	2	S, W, N, Z	B, D, F	S	P, R	DAL, SHA, TEP
RWR80#5420%&	542	2	S, W, N, Z	B, D	S	P, R	DAL, SHA, TEP
RWR80#5490%&	549	2	S, W, N, Z	B, D, F	S	P, R	DAL, SHA, TEP
RWR80#5560%&	556	2	S, W, N, Z	B, D	S	P, R	DAL, SHA, TEP
	Resistance	Power	Terminal	Resistance	Level 1	Level 2	
Part Number	Value (Ohms)	Rating (W)	Characteristic (#)	Tolerance (%)	(FRL)(&)	(FRL)(&)	Manufacturer
RWR80#5620%&	562	2	S, W, N, Z	B, D, F	S	P, R	DAL, SHA, TEP
RWR80#5690%&	569	2	S, W, N, Z	B, D	S	P, R	DAL, SHA, TEP
RWR80#5760%&	576	2	S, W, N, Z	B, D, F	S	P, R	DAL, SHA, TEP
RWR80#5830%&	583	2	S, W, N, Z	B, D	S	P, R	DAL, SHA, TEP
RWR80#5900%&	590	2	S, W, N, Z	B, D, F	S	P, R	DAL, SHA, TEP
RWR80#5970%&	597	2	S, W, N, Z	B, D	S	P, R	DAL, SHA, TEP
RWR80#6040%&	604	2	S, W, N, Z	B, D, F	S	P, R	DAL, SHA, TEP
RWR80#6120%&	612	2	S, W, N, Z	B, D	S	P, R	DAL, SHA, TEP
RWR80#6190%&	619	2	S, W, N, Z	B, D, F	S	P, R	DAL, SHA, TEP
RWR80#6260%&	626	2	S, W, N, Z	B, D	S	P, R	DAL, SHA, TEP
RWR80#6340%&	634	2	S, W, N, Z	B, D, F	S	P, R	DAL, SHA, TEP
RWR80#6420%&	642	2	S, W, N, Z	B, D	S	P, R	DAL, SHA, TEP
RWR80#6490%&	649	2	S, W	B, D, F	S	P, R	DAL, SHA, TEP
RWR80#6570%&	657	2	S, W	B, D	S	P, R	DAL, SHA, TEP
	Resistance	Power	Terminal	Resistance	Level 1	Level 2	
Part Number	Value (Ohms)	Rating (W)	Characteristic (#)	Tolerance (%)	(FRL)(&)	(FRL)(&)	Manufacturer
RWR80#6650%&	665	2	S, W	B, D, F	S	P, R	DAL, SHA, TEP
RWR80#6730%&	673	2	S, W	B, D	S	P, R	DAL, SHA, TEP
RWR80#6810%&	681	2	S, W	B, D, F	S	P, R	DAL, SHA, TEP
RWR80#6900%&	690	2	S, W	B, D	S	P, R	DAL, SHA, TEP
RWR80#6980#&	698	2	S, W	B, D, F	S	P, R	DAL, SHA, TEP
RWR80#7060%&	706	2	S, W	B, D	S	P, R	DAL, SHA, TEP
RWR80#7150%&	715	2	S, W	B, D, F	S	P, R	DAL, SHA, TEP
RWR80#7230%&	723	2	S, W	B, D	S	P, R	DAL, SHA, TEP
RWR80#7320%&	732	2	S, W	B, D, F	S	P, R	DAL, SHA, TEP
RWR80#7410%&	741	2	S, W	B, D	S	P, R	DAL, SHA, TEP
RWR80#7500%&	750	2	S, W	B, D, F	S	P, R	DAL, SHA, TEP
RWR80#7590%&	759	2	S, W	B, D	S	P, R	DAL, SHA, TEP
RWR80#7680%&	768	2	S, W	B, D, F	S	P, R	DAL, SHA, TEP

RWR80#7770%&	777	2	S, W	B, D	S	P, R	DAL, SHA, TEP
	Resistance	Power	Terminal	Resistance	Level 1	Level 2	
Part Number	Value (Ohms)	Rating (W)	Characteristic (#)	Tolerance (%)	(FRL)(&)	(FRL)(&)	Manufacturer
RWR80#7870%&	787	2	S, W	B, D, F	S	P, R	DAL, SHA, TEP
RWR80#7960%&	796	2	S, W	B, D	S	P, R	DAL, SHA, TEP
RWR80#8060%&	806	2	S, W	B, D, F	S	P, R	DAL, SHA, TEP
RWR80#8160%&	816	2	S, W	B, D	S	P, R	DAL, SHA, TEP
RWR80#8250%&	825	2	S, W	B, D, F	S	P, R	DAL, SHA, TEP
RWR80#8350%&	835	2	S, W	B, D	S	P, R	DAL, SHA, TEP
RWR80#8450%&	845	2	S, W	B, D, F	S	P, R	DAL, SHA, TEP
RWR80#8560%&	856	2	S, W	B, D	S	P, R	DAL, SHA, TEP
RWR80#8660%&	866	2	S, W	B, D, F	S	P, R	DAL, SHA, TEP
RWR80#8760%&	876	2	S, W	B, D	S	P, R	DAL, SHA, TEP
RWR80#8870%&	887	2	S, W	B, D, F	S	P, R	DAL, SHA, TEP
RWR80#8980%&	898	2	S, W	B, D	S	P, R	DAL, SHA, TEP
RWR80#9090%&	909	2	S, W	B, D, F	S	P, R	DAL, SHA, TEP
RWR80#9200%&	920	2	S, W	B, D	S	P, R	DAL, SHA, TEP
	Resistance	Power	Terminal	Resistance	Level 1	Level 2	
Part Number	Value (Ohms)	Rating (W)	Characteristic (#)	Tolerance (%)	(FRL)(&)	(FRL)(&)	Manufacturer
RWR80#9310%&	931	2	S, W	B, D, F	S	P, R	DAL, SHA, TEP
RWR80#9420%&	942	2	S, W	B, D	S	P, R	DAL, SHA, TEP
RWR80#9530%&	953	2	S, W	B, D, F	S	P, R	DAL, SHA, TEP
RWR80#9650%&	965	2	S, W	B, D	S	P, R	DAL, SHA, TEP
RWR80#9760%&	976	2	S, W	B, D, F	S	P, R	DAL, SHA, TEP
RWR80#9880%&	988	2	S, W	B, D	S	P, R	DAL, SHA, TEP
	Resistance	Power	Terminal	Resistance	Level 1	Level 2	
Part Number	Value (Ohms)	Rating (W)	Characteristic (#)	Tolerance (%)	(FRL)(&)	(FRL)(&)	Manufacturer

RWR80 Wirewound Resistors: 1000 Ohms through 1210 Ohms

	Resistance	Power	Terminal	Resistance	Level 1	Level 2	
Part Number	Value (Ohms)	Rating (W)	Characteristic (#)	Tolerance (%)	(FRL)(&)	(FRL)(&)	Manufacturer
RWR80#1001%&	1000	2	S, W	B, D, F	S	P, R	DAL, SHA, TEP
RWR80#1011%&	1010	2	S, W	B, D	S	P, R	DAL, SHA, TEP
RWR80#1021%&	1020	2	S, W	B, D, F	S	P, R	DAL, SHA, TEP
RWR80#1041%&	1040	2	S, W	B, D	S	P, R	DAL, SHA, TEP
RWR80#1051%&	1050	2	S, W	B, D, F	S	P, R	DAL, SHA, TEP
RWR80#1061%&	1060	2	S, W	B, D	S	P, R	DAL, SHA, TEP
RWR80#1071%&	1070	2	S, W	B, D, F	S	P, R	DAL, SHA, TEP
RWR80#1091%&	1090	2	S, W	B, D	S	P, R	DAL, SHA, TEP
	Resistance	Power	Terminal	Resistance	Level 1	Level 2	
Part Number	Value (Ohms)	Rating (W)	Characteristic (#)	Tolerance (%)	(FRL)(&)	(FRL)(&)	Manufacturer
RWR80#1101%&	1100	2	S, W	B, D, F	S	P, R	DAL, SHA, TEP
RWR80#1111%&	1110	2	S, W	B, D	S	P, R	DAL, SHA, TEP
RWR80#1131%&	1130	2	S, W	B, D, F	S	P, R	DAL, SHA, TEP

RWR80#1141%&	1140	2	S, W	B, D	S	P, R	DAL, SHA, TEP
RWR80#1151%&	1150	2	S, W	B, D, F	S	P, R	DAL, SHA, TEP
RWR80#1171%&	1170	2	S, W	B, D	S	P, R	DAL, SHA, TEP
RWR80#1181%&	1180	2	S, W	B, D, F	S	P, R	DAL, SHA, TEP
RWR80#1201%&	1200	2	S, W	B, D	S	P, R	DAL, SHA, TEP
RWR80#1211%&	1210	2	S, W	B, D, F	S	P, R	DAL, SHA, TEP
	Resistance	Power	Terminal	Resistance	Level 1	Level 2	
Part Number	Value (Ohms)	Rating (W)	Characteristic (#)	Tolerance (%)	(FRL)(&)	(FRL)(&)	Manufacturer

RWR81 Wirewound Resistors

	Resistance	Power	Terminal	Resistance	Level 1	Level 2	
Part Number	Value (Ohms)	Rating (W)	Characteristic (#)	Tolerance (%)	(FRL)(&)	(FRL)(&)	Manufacturer
RWR81#R100%&	0.100	1	S, W, N, Z	B, D, F	S	P, R	DAL, SHA, TEP
RWR81#R101%&	0.101	1	S, W, N, Z	B, D	S	P, R	DAL, SHA, TEP
RWR81#R102%&	0.102	1	S, W, N, Z	B, D, F	S	P, R	DAL, SHA, TEP
RWR81#R104%&	0.104	1	S, W, N, Z	B, D	S	P, R	DAL, SHA, TEP
RWR81#R105%&	0.105	1	S, W, N, Z	B, D, F	S	P, R	DAL, SHA, TEP
RWR81#R106%&	0.106	1	S, W, N, Z	B, D	S	P, R	DAL, SHA, TEP
RWR81#R107%&	0.107	1	S, W, N, Z	B, D, F	S	P, R	DAL, SHA, TEP
RWR81#R109%&	0.109	1	S, W, N, Z	B, D	S	P, R	DAL, SHA, TEP
RWR81#R110%&	0.110	1	S, W, N, Z	B, D, F	S	P, R	DAL, SHA, TEP
RWR81#R111%&	0.111	1	S, W, N, Z	B, D	S	P, R	DAL, SHA, TEP
RWR81#R113%&	0.113	1	S, W, N, Z	B, D, F	S	P, R	DAL, SHA, TEP
RWR81#R114%&	0.114	1	S, W, N, Z	B, D	S	P, R	DAL, SHA, TEP
RWR81#R115%&	0.115	1	S, W, N, Z	B, D, F	S	P, R	DAL, SHA, TEP
RWR81#R117%&	0.117	1	S, W, N, Z	B, D	S	P, R	DAL, SHA, TEP
RWR81#R118%&	0.118	1	S, W, N, Z	B, D, F	S	P, R	DAL, SHA, TEP
RWR81#R120%&	0.120	1	S, W, N, Z	B, D	S	P, R	DAL, SHA, TEP
RWR81#R121%&	0.121	1	S, W, N, Z	B, D, F	S	P, R	DAL, SHA, TEP
RWR81#R123%&	0.123	1	S, W, N, Z	B, D	S	P, R	DAL, SHA, TEP
RWR81#R124%&	0.124	1	S, W, N, Z	B, D, F	S	P, R	DAL, SHA, TEP
RWR81#R126%&	0.126	1	S, W, N, Z	B, D	S	P, R	DAL, SHA, TEP
RWR81#R127%&	0.127	1	S, W, N, Z	B, D, F	S	P, R	DAL, SHA, TEP
RWR81#R129%&	0.129	1	S, W, N, Z	B, D	S	P, R	DAL, SHA, TEP
RWR81#R130%&	0.130	1	S, W, N, Z	B, D, F	S	P, R	DAL, SHA, TEP
RWR81#R132%&	0.132	1	S, W, N, Z	B, D	S	P, R	DAL, SHA, TEP
RWR81#R133%&	0.133	1	S, W, N, Z	B, D, F	S	P, R	DAL, SHA, TEP
RWR81#R135%&	0.135	1	S, W, N, Z	B, D	S	P, R	DAL, SHA, TEP
RWR81#R137%&	0.137	1	S, W, N, Z	B, D, F	S	P, R	DAL, SHA, TEP
RWR81#R138%&	0.138	1	S, W, N, Z	B, D	S	P, R	DAL, SHA, TEP
RWR81#R140%&	0.140	1	S, W, N, Z	B, D, F	S	P, R	DAL, SHA, TEP
RWR81#R142%&	0.142	1	S, W, N, Z	B, D	S	P, R	DAL, SHA, TEP
RWR81#R143%&	0.143	1	S, W, N, Z	B, D, F	S	P, R	DAL, SHA, TEP
RWR81#R145%&	0.145	1	S, W, N, Z	B, D	S	P, R	DAL, SHA, TEP

RWR81#R147%&	0.147	1	S, W, N, Z	B, D, F	S	P, R	DAL, SHA, TEP
RWR81#R149%&	0.149	1	S, W, N, Z	B, D	S	P, R	DAL, SHA, TEP
RWR81#R150%&	0.150	1	S, W, N, Z	B, D, F	S	P, R	DAL, SHA, TEP
RWR81#R152%&	0.152	1	S, W, N, Z	B, D	S	P, R	DAL, SHA, TEP
RWR81#R154%&	0.154	1	S, W, N, Z	B, D, F	S	P, R	DAL, SHA, TEP
RWR81#R156%&	0.156	1	S, W, N, Z	B, D	S	P, R	DAL, SHA, TEP
RWR81#R158%&	0.158	1	S, W, N, Z	B, D, F	S	P, R	DAL, SHA, TEP
RWR81#R160%&	0.160	1	S, W, N, Z	B, D	S	P, R	DAL, SHA, TEP
RWR81#R162%&	0.162	1	S, W, N, Z	B, D, F	S	P, R	DAL, SHA, TEP
RWR81#R164%&	0.164	1	S, W, N, Z	B, D	S	P, R	DAL, SHA, TEP
RWR81#R165%&	0.165	1	S, W, N, Z	B, D, F	S	P, R	DAL, SHA, TEP
RWR81#R167%&	0.167	1	S, W, N, Z	B, D	S	P, R	DAL, SHA, TEP
RWR81#R169%&	0.169	1	S, W, N, Z	B, D, F	S	P, R	DAL, SHA, TEP
RWR81#R172%&	0.172	1	S, W, N, Z	B, D	S	P, R	DAL, SHA, TEP
RWR81#R174%&	0.174	1	S, W, N, Z	B, D, F	S	P, R	DAL, SHA, TEP
RWR81#R176%&	0.176	1	S, W, N, Z	B, D	S	P, R	DAL, SHA, TEP
RWR81#R178#&	0.178	1	S, W, N, Z	B, D, F	S	P, R	DAL, SHA, TEP
RWR81#R180%&	0.180	1	S, W, N, Z	B, D, F	S	P, R	DAL, SHA, TEP
RWR81#R182%&	0.182	1	S, W, N, Z	B, D, F	S	P, R	DAL, SHA, TEP
RWR81#R184%&	0.184	1	S, W, N, Z	B, D	S	P, R	DAL, SHA, TEP
RWR81#R187%&	0.187	1	S, W, N, Z	B, D, F	S	P, R	DAL, SHA, TEP
RWR81#R189%&	0.189	1	S, W, N, Z	B, D	S	P, R	DAL, SHA, TEP
RWR81#R191%&	0.191	1	S, W, N, Z	B, D, F	S	P, R	DAL, SHA, TEP
RWR81#R193%&	0.193	1	S, W, N, Z	B, D	S	P, R	DAL, SHA, TEP
RWR81#R196%&	0.196	1	S, W, N, Z	B, D, F	S	P, R	DAL, SHA, TEP
RWR81#R198%&	0.198	1	S, W, N, Z	B, D	S	P, R	DAL, SHA, TEP
RWR81#R200%&	0.200	1	S, W, N, Z	B, D, F	S	P, R	DAL, SHA, TEP
RWR81#R203%&	0.203	1	S, W, N, Z	B, D	S	P, R	DAL, SHA, TEP
RWR81#R205%&	0.205	1	S, W, N, Z	B, D, F	S	P, R	DAL, SHA, TEP
RWR81#R208%&	0.208	1	S, W, N, Z	B, D	S	P, R	DAL, SHA, TEP
RWR81#R210%&	0.210	1	S, W, N, Z	B, D, F	S	P, R	DAL, SHA, TEP
RWR81#R213%&	0.213	1	S, W, N, Z	B, D	S	P, R	DAL, SHA, TEP
RWR81#R215%&	0.215	1	S, W, N, Z	B, D, F	S	P, R	DAL, SHA, TEP
RWR81#R218%&	0.218	1	S, W, N, Z	B, D	S	P, R	DAL, SHA, TEP
RWR81#R221%&	0.221	1	S, W, N, Z	B, D, F	S	P, R	DAL, SHA, TEP
RWR81#R223%&	0.223	1	S, W, N, Z	B, D	S	P, R	DAL, SHA, TEP
RWR81#R226%&	0.226	1	S, W, N, Z	B, D, F	S	P, R	DAL, SHA, TEP
RWR81#R229%&	0.229	1	S, W, N, Z	B, D	S	P, R	DAL, SHA, TEP
RWR81#R232%&	0.232	1	S, W, N, Z	B, D, F	S	P, R	DAL, SHA, TEP
RWR81#R234%&	0.234	1	S, W, N, Z	B, D	S	P, R	DAL, SHA, TEP
RWR81#R237%&	0.237	1	S, W, N, Z	B, D, F	S	P, R	DAL, SHA, TEP
RWR81#R240%&	0.240	1	S, W, N, Z	B, D	S	P, R	DAL, SHA, TEP
RWR81#R243%&	0.243	1	S, W, N, Z	B, D, F	S	P, R	DAL, SHA, TEP
RWR81#R246%&	0.246	1	S, W, N, Z	B, D	S	P, R	DAL, SHA, TEP
RWR81#R249%&	0.249	1	S, W, N, Z	B, D, F	S	P, R	DAL, SHA, TEP
RWR81#R252%&	0.252	1	S, W, N, Z	B, D	S	P, R	DAL, SHA, TEP
RWR81#R255%&	0.255	1	S, W, N, Z	B, D, F	S	P, R	DAL, SHA, TEP

RWR81#R258%&	0.258	1	S, W, N, Z	B, D	S	P, R	DAL, SHA, TEP
RWR81#R261%&	0.261	1	S, W, N, Z	B, D, F	S	P, R	DAL, SHA, TEP
RWR81#R264%&	0.264	1	S, W, N, Z	B, D	S	P, R	DAL, SHA, TEP
RWR81#R267%&	0.267	1	S, W, N, Z	B, D, F	S	P, R	DAL, SHA, TEP
RWR81#R271%&	0.271	1	S, W, N, Z	B, D	S	P, R	DAL, SHA, TEP
RWR81#R274%&	0.274	1	S, W, N, Z	B, D, F	S	P, R	DAL, SHA, TEP
RWR81#R277%&	0.277	1	S, W, N, Z	B, D	S	P, R	DAL, SHA, TEP
RWR81#R280%&	0.280	1	S, W, N, Z	B, D, F	S	P, R	DAL, SHA, TEP
RWR81#R284%&	0.284	1	S, W, N, Z	B, D	S	P, R	DAL, SHA, TEP
RWR81#R287%&	0.287	1	S, W, N, Z	B, D, F	S	P, R	DAL, SHA, TEP
RWR81#R291%&	0.291	1	S, W, N, Z	B, D	S	P, R	DAL, SHA, TEP
RWR81#R294%&	0.294	1	S, W, N, Z	B, D, F	S	P, R	DAL, SHA, TEP
RWR81#R298%&	0.298	1	S, W, N, Z	B, D	S	P, R	DAL, SHA, TEP
RWR81#R301%&	0.301	1	S, W, N, Z	B, D, F	S	P, R	DAL, SHA, TEP
RWR81#R305%&	0.305	1	S, W, N, Z	B, D	S	P, R	DAL, SHA, TEP
RWR81#R309%&	0.309	1	S, W, N, Z	B, D, F	S	P, R	DAL, SHA, TEP
RWR81#R312%&	0.312	1	S, W, N, Z	B, D	S	P, R	DAL, SHA, TEP
RWR81#R316%&	0.316	1	S, W, N, Z	B, D, F	S	P, R	DAL, SHA, TEP
RWR81#R320%&	0.320	1	S, W, N, Z	B, D	S	P, R	DAL, SHA, TEP
RWR81#R324%&	0.324	1	S, W, N, Z	B, D, F	S	P, R	DAL, SHA, TEP
RWR81#R328%&	0.328	1	S, W, N, Z	B, D	S	P, R	DAL, SHA, TEP
RWR81#R332%&	0.332	1	S, W, N, Z	B, D, F	S	P, R	DAL, SHA, TEP
RWR81#R336%&	0.336	1	S, W, N, Z	B, D	S	P, R	DAL, SHA, TEP
RWR81#R340%&	0.340	1	S, W, N, Z	B, D, F	S	P, R	DAL, SHA, TEP
RWR81#R344%&	0.344	1	S, W, N, Z	B, D	S	P, R	DAL, SHA, TEP
RWR81#R348%&	0.348	1	S, W, N, Z	B, D, F	S	P, R	DAL, SHA, TEP
RWR81#R352%&	0.352	1	S, W, N, Z	B, D	S	P, R	DAL, SHA, TEP
RWR81#R357%&	0.357	1	S, W, N, Z	B, D, F	S	P, R	DAL, SHA, TEP
RWR81#R361%&	0.361	1	S, W, N, Z	B, D	S	P, R	DAL, SHA, TEP
RWR81#R365%&	0.365	1	S, W, N, Z	B, D, F	S	P, R	DAL, SHA, TEP
RWR81#R370%&	0.370	1	S, W, N, Z	B, D	S	P, R	DAL, SHA, TEP
RWR81#R374%&	0.374	1	S, W, N, Z	B, D, F	S	P, R	DAL, SHA, TEP
RWR81#R379%&	0.379	1	S, W, N, Z	B, D	S	P, R	DAL, SHA, TEP
RWR81#R383%&	0.383	1	S, W, N, Z	B, D, F	S	P, R	DAL, SHA, TEP
RWR81#R388%&	0.388	1	S, W, N, Z	B, D	S	P, R	DAL, SHA, TEP
RWR81#R392%&	0.392	1	S, W, N, Z	B, D, F	S	P, R	DAL, SHA, TEP
RWR81#R397%&	0.397	1	S, W, N, Z	B, D	S	P, R	DAL, SHA, TEP
RWR81#R402%&	0.402	1	S, W, N, Z	B, D, F	S	P, R	DAL, SHA, TEP
RWR81#R407%&	0.407	1	S, W, N, Z	B, D	S	P, R	DAL, SHA, TEP
RWR81#R412%&	0.412	1	S, W, N, Z	B, D, F	S	P, R	DAL, SHA, TEP
RWR81#R417%&	0.417	1	S, W, N, Z	B, D	S	P, R	DAL, SHA, TEP
RWR81#R422%&	0.422	1	S, W, N, Z	B, D, F	S	P, R	DAL, SHA, TEP
RWR81#R427%&	0.427	1	S, W, N, Z	B, D	S	P, R	DAL, SHA, TEP
RWR81#R432%&	0.432	1	S, W, N, Z	B, D, F	S	P, R	DAL, SHA, TEP
RWR81#R437%&	0.437	1	S, W, N, Z	B, D	S	P, R	DAL, SHA, TEP
RWR81#R442%&	0.442	1	S, W, N, Z	B, D, F	S	P, R	DAL, SHA, TEP
RWR81#R448%&	0.448	1	S, W, N, Z	B, D	S	P, R	DAL, SHA, TEP

RWR81#R453%&	0.453	1	S, W, N, Z	B, D, F	S	P, R	DAL, SHA, TEP
RWR81#R459%&	0.459	1	S, W, N, Z	B, D	S	P, R	DAL, SHA, TEP
RWR81#R464%&	0.464	1	S, W, N, Z	B, D, F	S	P, R	DAL, SHA, TEP
RWR81#R470%&	0.470	1	S, W, N, Z	B, D	S	P, R	DAL, SHA, TEP
RWR81#R475%&	0.475	1	S, W, N, Z	B, D, F	S	P, R	DAL, SHA, TEP
RWR81#R481%&	0.481	1	S, W, N, Z	B, D	S	P, R	DAL, SHA, TEP
RWR81#R487%&	0.487	1	S, W, N, Z	B, D, F	S	P, R	DAL, SHA, TEP
RWR81#R493%&	0.493	1	S, W, N, Z	B, D	S	P, R	DAL, SHA, TEP
RWR81#R499%&	0.499	1	S, W, N, Z	B, D, F	S	P, R	DAL, SHA, TEP
RWR81#R505%&	0.505	1	S, W, N, Z	B, D	S	P, R	DAL, SHA, TEP
RWR81#R511%&	0.511	1	S, W, N, Z	B, D, F	S	P, R	DAL, SHA, TEP
RWR81#R517%&	0.517	1	S, W, N, Z	B, D	S	P, R	DAL, SHA, TEP
RWR81#R523%&	0.523	1	S, W, N, Z	B, D, F	S	P, R	DAL, SHA, TEP
RWR81#R530%&	0.530	1	S, W, N, Z	B, D	S	P, R	DAL, SHA, TEP
RWR81#R536%&	0.536	1	S, W, N, Z	B, D, F	S	P, R	DAL, SHA, TEP
RWR81#R542%&	0.542	1	S, W, N, Z	B, D	S	P, R	DAL, SHA, TEP
RWR81#R549%&	0.549	1	S, W, N, Z	B, D, F	S	P, R	DAL, SHA, TEP
RWR81#R556%&	0.556	1	S, W, N, Z	B, D	S	P, R	DAL, SHA, TEP
RWR81#R562%&	0.562	1	S, W, N, Z	B, D, F	S	P, R	DAL, SHA, TEP
RWR81#R569%&	0.569	1	S, W, N, Z	B, D	S	P, R	DAL, SHA, TEP
RWR81#R576%&	0.576	1	S, W, N, Z	B, D, F	S	P, R	DAL, SHA, TEP
RWR81#R583%&	0.583	1	S, W, N, Z	B, D	S	P, R	DAL, SHA, TEP
RWR81#R590%&	0.590	1	S, W, N, Z	B, D, F	S	P, R	DAL, SHA, TEP
RWR81#R597%&	0.597	1	S, W, N, Z	B, D	S	P, R	DAL, SHA, TEP
RWR81#R604%&	0.604	1	S, W, N, Z	B, D, F	S	P, R	DAL, SHA, TEP
RWR81#R612%&	0.612	1	S, W, N, Z	B, D	S	P, R	DAL, SHA, TEP
RWR81#R619%&	0.619	1	S, W, N, Z	B, D, F	S	P, R	DAL, SHA, TEP
RWR81#R626%&	0.626	1	S, W, N, Z	B, D	S	P, R	DAL, SHA, TEP
RWR81#R634%&	0.634	1	S, W, N, Z	B, D, F	S	P, R	DAL, SHA, TEP
RWR81#R642%&	0.642	1	S, W, N, Z	B, D	S	P, R	DAL, SHA, TEP
RWR81#R649%&	0.649	1	S, W, N, Z	B, D, F	S	P, R	DAL, SHA, TEP
RWR81#R657%&	0.657	1	S, W, N, Z	B, D	S	P, R	DAL, SHA, TEP
RWR81#R665%&	0.665	1	S, W, N, Z	B, D, F	S	P, R	DAL, SHA, TEP
RWR81#R673%&	0.673	1	S, W, N, Z	B, D	S	P, R	DAL, SHA, TEP
RWR81#R681%&	0.681	1	S, W, N, Z	B, D, F	S	P, R	DAL, SHA, TEP
RWR81#R690%&	0.690	1	S, W, N, Z	B, D	S	P, R	DAL, SHA, TEP
RWR81#R698%&	0.698	1	S, W, N, Z	B, D, F	S	P, R	DAL, SHA, TEP
RWR81#R706%&	0.706	1	S, W, N, Z	B, D	S	P, R	DAL, SHA, TEP
RWR81#R715%&	0.715	1	S, W, N, Z	B, D, F	S	P, R	DAL, SHA, TEP
RWR81#R723%&	0.723	1	S, W, N, Z	B, D	S	P, R	DAL, SHA, TEP
RWR81#R732%&	0.732	1	S, W, N, Z	B, D, F	S	P, R	DAL, SHA, TEP
RWR81#R741%&	0.741	1	S, W, N, Z	B, D	S	P, R	DAL, SHA, TEP
RWR81#R750%&	0.750	1	S, W, N, Z	B, D, F	S	P, R	DAL, SHA, TEP
RWR81#R759%&	0.759	1	S, W, N, Z	B, D	S	P, R	DAL, SHA, TEP
RWR81#R768%&	0.768	1	S, W, N, Z	B, D, F	S	P, R	DAL, SHA, TEP
RWR81#R776%&	0.776	1	S, W, N, Z	B, D	S	P, R	DAL, SHA, TEP
RWR81#R787%&	0.787	1	S, W, N, Z	B, D, F	S	P, R	DAL, SHA, TEP

RWR81#R796%&	0.796	1	S, W, N, Z	B, D	S	P, R	DAL, SHA, TEP
RWR81#R806%&	0.806	1	S, W, N, Z	B, D, F	S	P, R	DAL, SHA, TEP
RWR81#R816%&	0.816	1	S, W, N, Z	B, D	S	P, R	DAL, SHA, TEP
RWR81#R825%&	0.825	1	S, W, N, Z	B, D, F	S	P, R	DAL, SHA, TEP
RWR81#R835%&	0.835	1	S, W, N, Z	B, D	S	P, R	DAL, SHA, TEP
RWR81#R845%&	0.845	1	S, W, N, Z	B, D, F	S	P, R	DAL, SHA, TEP
RWR81#R856%&	0.856	1	S, W, N, Z	B, D	S	P, R	DAL, SHA, TEP
RWR81#R866%&	0.866	1	S, W, N, Z	B, D, F	S	P, R	DAL, SHA, TEP
RWR81#R876%&	0.876	1	S, W, N, Z	B, D	S	P, R	DAL, SHA, TEP
RWR81#R887%&	0.887	1	S, W, N, Z	B, D, F	S	P, R	DAL, SHA, TEP
RWR81#R898%&	0.898	1	S, W, N, Z	B, D	S	P, R	DAL, SHA, TEP
RWR81#R909%&	0.909	1	S, W, N, Z	B, D, F	S	P, R	DAL, SHA, TEP
RWR81#R920%&	0.920	1	S, W, N, Z	B, D	S	P, R	DAL, SHA, TEP
RWR81#R931%&	0.931	1	S, W, N, Z	B, D, F	S	P, R	DAL, SHA, TEP
RWR81#R942%&	0.942	1	S, W, N, Z	B, D	S	P, R	DAL, SHA, TEP
RWR81#R953%&	0.953	1	S, W, N, Z	B, D, F	S	P, R	DAL, SHA, TEP
RWR81#R965%&	0.965	1	S, W, N, Z	B, D	S	P, R	DAL, SHA, TEP
RWR81#R976%&	0.976	1	S, W, N, Z	B, D, F	S	P, R	DAL, SHA, TEP
RWR81#R988%&	0.988	1	S, W, N, Z	B, D	S	P, R	DAL, SHA, TEP
RWR81#1R00%&	1.00	1	S, W, N, Z	B, D, F	S	P, R	DAL, SHA, TEP
RWR81#1R01%&	1.01	1	S, W, N, Z	B, D	S	P, R	DAL, SHA, TEP
RWR81#1R02%&	1.02	1	S, W, N, Z	B, D, F	S	P, R	DAL, SHA, TEP
RWR81#1R04%&	1.04	1	S, W, N, Z	B, D	S	P, R	DAL, SHA, TEP
RWR81#1R05%&	1.05	1	S, W, N, Z	B, D, F	S	P, R	DAL, SHA, TEP
RWR81#1R06%&	1.06	1	S, W, N, Z	B, D	S	P, R	DAL, SHA, TEP
RWR81#1R07%&	1.07	1	S, W, N, Z	B, D, F	S	P, R	DAL, SHA, TEP
RWR81#1R09%&	1.09	1	S, W, N, Z	B, D	S	P, R	DAL, SHA, TEP
RWR81#1R10%&	1.10	1	S, W, N, Z	B, D, F	S	P, R	DAL, SHA, TEP
RWR81#1R11%&	1.11	1	S, W, N, Z	B, D	S	P, R	DAL, SHA, TEP
RWR81#1R13%&	1.13	1	S, W, N, Z	B, D, F	S	P, R	DAL, SHA, TEP
RWR81#1R14%&	1.14	1	S, W, N, Z	B, D	S	P, R	DAL, SHA, TEP
RWR81#1R15%&	1.15	1	S, W, N, Z	B, D, F	S	P, R	DAL, SHA, TEP
RWR81#1R17%&	1.17	1	S, W, N, Z	B, D	S	P, R	DAL, SHA, TEP
RWR81#1R18%&	1.18	1	S, W, N, Z	B, D, F	S	P, R	DAL, SHA, TEP
RWR81#1R20%&	1.20	1	S, W, N, Z	B, D	S	P, R	DAL, SHA, TEP
RWR81#1R21%&	1.21	1	S, W, N, Z	B, D, F	S	P, R	DAL, SHA, TEP
RWR81#1R23%&	1.23	1	S, W, N, Z	B, D	S	P, R	DAL, SHA, TEP
RWR81#1R24%&	1.24	1	S, W, N, Z	B, D, F	S	P, R	DAL, SHA, TEP
RWR81#1R26%&	1.26	1	S, W, N, Z	B, D	S	P, R	DAL, SHA, TEP
RWR81#1R27%&	1.27	1	S, W, N, Z	B, D, F	S	P, R	DAL, SHA, TEP
RWR81#1R29%&	1.29	1	S, W, N, Z	B, D	S	P, R	DAL, SHA, TEP
RWR81#1R30%&	1.30	1	S, W, N, Z	B, D, F	S	P, R	DAL, SHA, TEP
RWR81#1R32%&	1.32	1	S, W, N, Z	B, D	S	P, R	DAL, SHA, TEP
RWR81#1R33%&	1.33	1	S, W, N, Z	B, D, F	S	P, R	DAL, SHA, TEP
RWR81#1R35%&	1.35	1	S, W, N, Z	B, D	S	P, R	DAL, SHA, TEP
RWR81#1R37%&	1.37	1	S, W, N, Z	B, D, F	S	P, R	DAL, SHA, TEP
RWR81#1R38%&	1.38	1	S, W, N, Z	B, D	S	P, R	DAL, SHA, TEP

RWR81#1R40%&	1.40	1	S, W, N, Z	B, D, F	S	P, R	DAL, SHA, TEP
RWR81#1R42%&	1.42	1	S, W, N, Z	B, D	S	P, R	DAL, SHA, TEP
RWR81#1R43%&	1.43	1	S, W, N, Z	B, D, F	S	P, R	DAL, SHA, TEP
RWR81#1R45%&	1.45	1	S, W, N, Z	B, D	S	P, R	DAL, SHA, TEP
RWR81#1R47%&	1.47	1	S, W, N, Z	B, D, F	S	P, R	DAL, SHA, TEP
RWR81#1R49%&	1.49	1	S, W, N, Z	B, D	S	P, R	DAL, SHA, TEP
RWR81#1R50%&	1.50	1	S, W, N, Z	B, D, F	S	P, R	DAL, SHA, TEP
RWR81#1R52%&	1.52	1	S, W, N, Z	B, D	S	P, R	DAL, SHA, TEP
RWR81#1R54%&	1.54	1	S, W, N, Z	B, D, F	S	P, R	DAL, SHA, TEP
RWR81#1R56%&	1.56	1	S, W, N, Z	B, D	S	P, R	DAL, SHA, TEP
RWR81#1R58%&	1.58	1	S, W, N, Z	B, D, F	S	P, R	DAL, SHA, TEP
RWR81#1R60%&	1.60	1	S, W, N, Z	B, D	S	P, R	DAL, SHA, TEP
RWR81#1R62%&	1.62	1	S, W, N, Z	B, D, F	S	P, R	DAL, SHA, TEP
RWR81#1R64%&	1.64	1	S, W, N, Z	B, D	S	P, R	DAL, SHA, TEP
RWR81#1R65%&	1.65	1	S, W, N, Z	B, D, F	S	P, R	DAL, SHA, TEP
RWR81#1R67%&	1.67	1	S, W, N, Z	B, D	S	P, R	DAL, SHA, TEP
RWR81#1R69%&	1.69	1	S, W, N, Z	B, D, F	S	P, R	DAL, SHA, TEP
RWR81#1R72%&	1.72	1	S, W, N, Z	B, D	S	P, R	DAL, SHA, TEP
RWR81#1R74%&	1.74	1	S, W, N, Z	B, D, F	S	P, R	DAL, SHA, TEP
RWR81#1R76%&	1.76	1	S, W, N, Z	B, D	S	P, R	DAL, SHA, TEP
RWR81#1R78#&	1.78	1	S, W, N, Z	B, D, F	S	P, R	DAL, SHA, TEP
RWR81#1R80%&	1.80	1	S, W, N, Z	B, D, F	S	P, R	DAL, SHA, TEP
RWR81#1R82%&	1.82	1	S, W, N, Z	B, D, F	S	P, R	DAL, SHA, TEP
RWR81#1R84%&	1.84	1	S, W, N, Z	B, D	S	P, R	DAL, SHA, TEP
RWR81#1R87%&	1.87	1	S, W, N, Z	B, D, F	S	P, R	DAL, SHA, TEP
RWR81#1R89%&	1.89	1	S, W, N, Z	B, D	S	P, R	DAL, SHA, TEP
RWR81#1R91%&	1.91	1	S, W, N, Z	B, D, F	S	P, R	DAL, SHA, TEP
RWR81#1R93%&	1.93	1	S, W, N, Z	B, D	S	P, R	DAL, SHA, TEP
RWR81#1R96%&	1.96	1	S, W, N, Z	B, D, F	S	P, R	DAL, SHA, TEP
RWR81#1R98%&	1.98	1	S, W, N, Z	B, D	S	P, R	DAL, SHA, TEP
RWR81#2R00%&	2.00	1	S, W, N, Z	B, D, F	S	P, R	DAL, SHA, TEP
RWR81#2R03%&	2.03	1	S, W, N, Z	B, D	S	P, R	DAL, SHA, TEP
RWR81#2R05%&	2.05	1	S, W, N, Z	B, D, F	S	P, R	DAL, SHA, TEP
RWR81#2R08%&	2.08	1	S, W, N, Z	B, D	S	P, R	DAL, SHA, TEP
RWR81#2R10%&	2.10	1	S, W, N, Z	B, D, F	S	P, R	DAL, SHA, TEP
RWR81#2R13%&	2.13	1	S, W, N, Z	B, D	S	P, R	DAL, SHA, TEP
RWR81#2R15%&	2.15	1	S, W, N, Z	B, D, F	S	P, R	DAL, SHA, TEP
RWR81#2R18%&	2.18	1	S, W, N, Z	B, D	S	P, R	DAL, SHA, TEP
RWR81#2R21%&	2.21	1	S, W, N, Z	B, D, F	S	P, R	DAL, SHA, TEP
RWR81#2R23%&	2.23	1	S, W, N, Z	B, D	S	P, R	DAL, SHA, TEP
RWR81#2R26%&	2.26	1	S, W, N, Z	B, D, F	S	P, R	DAL, SHA, TEP
RWR81#2R29%&	2.29	1	S, W, N, Z	B, D	S	P, R	DAL, SHA, TEP
RWR81#2R32%&	2.32	1	S, W, N, Z	B, D, F	S	P, R	DAL, SHA, TEP
RWR81#2R34%&	2.34	1	S, W, N, Z	B, D	S	P, R	DAL, SHA, TEP
RWR81#2R37%&	2.37	1	S, W, N, Z	B, D, F	S	P, R	DAL, SHA, TEP
RWR81#2R40%&	2.40	1	S, W, N, Z	B, D	S	P, R	DAL, SHA, TEP
RWR81#2R43%&	2.43	1	S, W, N, Z	B, D, F	S	P, R	DAL, SHA, TEP

RWR81#2R46%&	2.46	1	S, W, N, Z	B, D	S	P, R	DAL, SHA, TEP
RWR81#2R49%&	2.49	1	S, W, N, Z	B, D, F	S	P, R	DAL, SHA, TEP
RWR81#2R52%&	2.52	1	S, W, N, Z	B, D	S	P, R	DAL, SHA, TEP
RWR81#2R55%&	2.55	1	S, W, N, Z	B, D, F	S	P, R	DAL, SHA, TEP
RWR81#2R58%&	2.58	1	S, W, N, Z	B, D	S	P, R	DAL, SHA, TEP
RWR81#2R61%&	2.61	1	S, W, N, Z	B, D, F	S	P, R	DAL, SHA, TEP
RWR81#2R64%&	2.64	1	S, W, N, Z	B, D	S	P, R	DAL, SHA, TEP
RWR81#2R67%&	2.67	1	S, W, N, Z	B, D, F	S	P, R	DAL, SHA, TEP
RWR81#2R71%&	2.71	1	S, W, N, Z	B, D	S	P, R	DAL, SHA, TEP
RWR81#2R74%&	2.74	1	S, W, N, Z	B, D, F	S	P, R	DAL, SHA, TEP
RWR81#2R77%&	2.77	1	S, W, N, Z	B, D	S	P, R	DAL, SHA, TEP
RWR81#2R80%&	2.80	1	S, W, N, Z	B, D, F	S	P, R	DAL, SHA, TEP
RWR81#2R84%&	2.84	1	S, W, N, Z	B, D	S	P, R	DAL, SHA, TEP
RWR81#2R87%&	2.87	1	S, W, N, Z	B, D, F	S	P, R	DAL, SHA, TEP
RWR81#2R91%&	2.91	1	S, W, N, Z	B, D	S	P, R	DAL, SHA, TEP
RWR81#2R94%&	2.94	1	S, W, N, Z	B, D, F	S	P, R	DAL, SHA, TEP
RWR81#2R98%&	2.98	1	S, W, N, Z	B, D	S	P, R	DAL, SHA, TEP
RWR81#3R01%&	3.01	1	S, W, N, Z	B, D, F	S	P, R	DAL, SHA, TEP
RWR81#3R05%&	3.05	1	S, W, N, Z	B, D	S	P, R	DAL, SHA, TEP
RWR81#3R09%&	3.09	1	S, W, N, Z	B, D, F	S	P, R	DAL, SHA, TEP
RWR81#3R12%&	3.12	1	S, W, N, Z	B, D	S	P, R	DAL, SHA, TEP
RWR81#3R16%&	3.16	1	S, W, N, Z	B, D, F	S	P, R	DAL, SHA, TEP
RWR81#3R20%&	3.20	1	S, W, N, Z	B, D	S	P, R	DAL, SHA, TEP
RWR81#3R24%&	3.24	1	S, W, N, Z	B, D, F	S	P, R	DAL, SHA, TEP
RWR81#3R28%&	3.28	1	S, W, N, Z	B, D	S	P, R	DAL, SHA, TEP
RWR81#3R32%&	3.32	1	S, W, N, Z	B, D, F	S	P, R	DAL, SHA, TEP
RWR81#3R36%&	3.36	1	S, W, N, Z	B, D	S	P, R	DAL, SHA, TEP
RWR81#3R40%&	3.40	1	S, W, N, Z	B, D, F	S	P, R	DAL, SHA, TEP
RWR81#3R44%&	3.44	1	S, W, N, Z	B, D	S	P, R	DAL, SHA, TEP
RWR81#3R48%&	3.48	1	S, W, N, Z	B, D, F	S	P, R	DAL, SHA, TEP
RWR81#3R52%&	3.52	1	S, W, N, Z	B, D	S	P, R	DAL, SHA, TEP
RWR81#3R57%&	3.57	1	S, W, N, Z	B, D, F	S	P, R	DAL, SHA, TEP
RWR81#3R61%&	3.61	1	S, W, N, Z	B, D	S	P, R	DAL, SHA, TEP
RWR81#3R65%&	3.65	1	S, W, N, Z	B, D, F	S	P, R	DAL, SHA, TEP
RWR81#3R70%&	3.70	1	S, W, N, Z	B, D	S	P, R	DAL, SHA, TEP
RWR81#3R74%&	3.74	1	S, W, N, Z	B, D, F	S	P, R	DAL, SHA, TEP
RWR81#3R79%&	3.79	1	S, W, N, Z	B, D	S	P, R	DAL, SHA, TEP
RWR81#3R83%&	3.83	1	S, W, N, Z	B, D, F	S	P, R	DAL, SHA, TEP
RWR81#3R88%&	3.88	1	S, W, N, Z	B, D	S	P, R	DAL, SHA, TEP
RWR81#3R92%&	3.92	1	S, W, N, Z	B, D, F	S	P, R	DAL, SHA, TEP
RWR81#3R97%&	3.97	1	S, W, N, Z	B, D	S	P, R	DAL, SHA, TEP
RWR81#4R02%&	4.02	1	S, W, N, Z	B, D, F	S	P, R	DAL, SHA, TEP
RWR81#4R07%&	4.07	1	S, W, N, Z	B, D	S	P, R	DAL, SHA, TEP
RWR81#4R12%&	4.12	1	S, W, N, Z	B, D, F	S	P, R	DAL, SHA, TEP
RWR81#4R17%&	4.17	1	S, W, N, Z	B, D	S	P, R	DAL, SHA, TEP
RWR81#4R22%&	4.22	1	S, W, N, Z	B, D, F	S	P, R	DAL, SHA, TEP
RWR81#4R27%&	4.27	1	S, W, N, Z	B, D	S	P, R	DAL, SHA, TEP

RWR81#4R32%&	4.32	1	S, W, N, Z	B, D, F	S	P, R	DAL, SHA, TEP
RWR81#4R37%&	4.37	1	S, W, N, Z	B, D	S	P, R	DAL, SHA, TEP
RWR81#4R42%&	4.42	1	S, W, N, Z	B, D, F	S	P, R	DAL, SHA, TEP
RWR81#4R48%&	4.48	1	S, W, N, Z	B, D	S	P, R	DAL, SHA, TEP
RWR81#4R53%&	4.53	1	S, W, N, Z	B, D, F	S	P, R	DAL, SHA, TEP
RWR81#4R59%&	4.59	1	S, W, N, Z	B, D	S	P, R	DAL, SHA, TEP
RWR81#4R64%&	4.64	1	S, W, N, Z	B, D, F	S	P, R	DAL, SHA, TEP
RWR81#4R70%&	4.70	1	S, W, N, Z	B, D	S	P, R	DAL, SHA, TEP
RWR81#4R75%&	4.75	1	S, W, N, Z	B, D, F	S	P, R	DAL, SHA, TEP
RWR81#4R81%&	4.81	1	S, W, N, Z	B, D	S	P, R	DAL, SHA, TEP
RWR81#4R87%&	4.87	1	S, W, N, Z	B, D, F	S	P, R	DAL, SHA, TEP
RWR81#4R93%&	4.93	1	S, W, N, Z	B, D	S	P, R	DAL, SHA, TEP
RWR81#4R99%&	4.99	1	S, W, N, Z	B, D, F	S	P, R	DAL, SHA, TEP
RWR81#5R05%&	5.05	1	S, W, N, Z	B, D	S	P, R	DAL, SHA, TEP
RWR81#5R11%&	5.11	1	S, W, N, Z	B, D, F	S	P, R	DAL, SHA, TEP
RWR81#5R17%&	5.17	1	S, W, N, Z	B, D	S	P, R	DAL, SHA, TEP
RWR81#5R23%&	5.23	1	S, W, N, Z	B, D, F	S	P, R	DAL, SHA, TEP
RWR81#5R30%&	5.30	1	S, W, N, Z	B, D	S	P, R	DAL, SHA, TEP
RWR81#5R36%&	5.36	1	S, W, N, Z	B, D, F	S	P, R	DAL, SHA, TEP
RWR81#5R42%&	5.42	1	S, W, N, Z	B, D	S	P, R	DAL, SHA, TEP
RWR81#5R49%&	5.49	1	S, W, N, Z	B, D, F	S	P, R	DAL, SHA, TEP
RWR81#5R56%&	5.56	1	S, W, N, Z	B, D	S	P, R	DAL, SHA, TEP
RWR81#5R62%&	5.62	1	S, W, N, Z	B, D, F	S	P, R	DAL, SHA, TEP
RWR81#5R69%&	5.69	1	S, W, N, Z	B, D	S	P, R	DAL, SHA, TEP
RWR81#5R76%&	5.76	1	S, W, N, Z	B, D, F	S	P, R	DAL, SHA, TEP
RWR81#5R83%&	5.83	1	S, W, N, Z	B, D	S	P, R	DAL, SHA, TEP
RWR81#5R90%&	5.90	1	S, W, N, Z	B, D, F	S	P, R	DAL, SHA, TEP
RWR81#5R97%&	5.97	1	S, W, N, Z	B, D	S	P, R	DAL, SHA, TEP
RWR81#6R04%&	6.04	1	S, W, N, Z	B, D, F	S	P, R	DAL, SHA, TEP
RWR81#6R12%&	6.12	1	S, W, N, Z	B, D	S	P, R	DAL, SHA, TEP
RWR81#6R19%&	6.19	1	S, W, N, Z	B, D, F	S	P, R	DAL, SHA, TEP
RWR81#6R26%&	6.26	1	S, W, N, Z	B, D	S	P, R	DAL, SHA, TEP
RWR81#6R34%&	6.34	1	S, W, N, Z	B, D, F	S	P, R	DAL, SHA, TEP
RWR81#6R42%&	6.42	1	S, W, N, Z	B, D	S	P, R	DAL, SHA, TEP
RWR81#6R49%&	6.49	1	S, W, N, Z	B, D, F	S	P, R	DAL, SHA, TEP
RWR81#6R57%&	6.57	1	S, W, N, Z	B, D	S	P, R	DAL, SHA, TEP
RWR81#6R65%&	6.65	1	S, W, N, Z	B, D, F	S	P, R	DAL, SHA, TEP
RWR81#6R73%&	6.73	1	S, W, N, Z	B, D	S	P, R	DAL, SHA, TEP
RWR81#6R81%&	6.81	1	S, W, N, Z	B, D, F	S	P, R	DAL, SHA, TEP
RWR81#6R90%&	6.90	1	S, W, N, Z	B, D	S	P, R	DAL, SHA, TEP
RWR81#6R98%&	6.98	1	S, W, N, Z	B, D, F	S	P, R	DAL, SHA, TEP
RWR81#7R06%&	7.06	1	S, W, N, Z	B, D	S	P, R	DAL, SHA, TEP
RWR81#7R15%&	7.15	1	S, W, N, Z	B, D, F	S	P, R	DAL, SHA, TEP
RWR81#7R23%&	7.23	1	S, W, N, Z	B, D	S	P, R	DAL, SHA, TEP
RWR81#7R32%&	7.32	1	S, W, N, Z	B, D, F	S	P, R	DAL, SHA, TEP
RWR81#7R41%&	7.41	1	S, W, N, Z	B, D	S	P, R	DAL, SHA, TEP
RWR81#7R50%&	7.50	1	S, W, N, Z	B, D, F	S	P, R	DAL, SHA, TEP

RWR81#7R59%&	7.59	1	S, W, N, Z	B, D	S	P, R	DAL, SHA, TEP
RWR81#7R68%&	7.68	1	S, W, N, Z	B, D, F	S	P, R	DAL, SHA, TEP
RWR81#7R77%&	7.77	1	S, W, N, Z	B, D	S	P, R	DAL, SHA, TEP
RWR81#7R87%&	7.87	1	S, W, N, Z	B, D, F	S	P, R	DAL, SHA, TEP
RWR81#7R96%&	7.96	1	S, W, N, Z	B, D	S	P, R	DAL, SHA, TEP
RWR81#8R06%&	8.06	1	S, W, N, Z	B, D, F	S	P, R	DAL, SHA, TEP
RWR81#8R16%&	8.16	1	S, W, N, Z	B, D	S	P, R	DAL, SHA, TEP
RWR81#8R25%&	8.25	1	S, W, N, Z	B, D, F	S	P, R	DAL, SHA, TEP
RWR81#8R35%&	8.35	1	S, W, N, Z	B, D	S	P, R	DAL, SHA, TEP
RWR81#8R45%&	8.45	1	S, W, N, Z	B, D, F	S	P, R	DAL, SHA, TEP
RWR81#8R56%&	8.56	1	S, W, N, Z	B, D	S	P, R	DAL, SHA, TEP
RWR81#8R66%&	8.66	1	S, W, N, Z	B, D, F	S	P, R	DAL, SHA, TEP
RWR81#8R76%&	8.76	1	S, W, N, Z	B, D	S	P, R	DAL, SHA, TEP
RWR81#8R87%&	8.87	1	S, W, N, Z	B, D, F	S	P, R	DAL, SHA, TEP
RWR81#8R98%&	8.98	1	S, W, N, Z	B, D	S	P, R	DAL, SHA, TEP
RWR81#9R09%&	9.09	1	S, W, N, Z	B, D, F	S	P, R	DAL, SHA, TEP
RWR81#9R20%&	9.20	1	S, W, N, Z	B, D	S	P, R	DAL, SHA, TEP
RWR81#9R31%&	9.31	1	S, W, N, Z	B, D, F	S	P, R	DAL, SHA, TEP
RWR81#9R42%&	9.42	1	S, W, N, Z	B, D	S	P, R	DAL, SHA, TEP
RWR81#9R53%&	9.53	1	S, W, N, Z	B, D, F	S	P, R	DAL, SHA, TEP
RWR81#9R65%&	9.65	1	S, W, N, Z	B, D	S	P, R	DAL, SHA, TEP
RWR81#9R76%&	9.76	1	S, W, N, Z	B, D, F	S	P, R	DAL, SHA, TEP
RWR81#9R88%&	9.88	1	S, W, N, Z	B, D	S	P, R	DAL, SHA, TEP
RWR81#10R0%&	10.0	1	S, W, N, Z	B, D, F	S	P, R	DAL, SHA, TEP
RWR81#10R1%&	10.1	1	S, W, N, Z	B, D	S	P, R	DAL, SHA, TEP
RWR81#10R2%&	10.2	1	S, W, N, Z	B, D, F	S	P, R	DAL, SHA, TEP
RWR81#10R4%&	10.4	1	S, W, N, Z	B, D	S	P, R	DAL, SHA, TEP
RWR81#10R5%&	10.5	1	S, W, N, Z	B, D, F	S	P, R	DAL, SHA, TEP
RWR81#10R6%&	10.6	1	S, W, N, Z	B, D	S	P, R	DAL, SHA, TEP
RWR81#10R7%&	10.7	1	S, W, N, Z	B, D, F	S	P, R	DAL, SHA, TEP
RWR81#10R9%&	10.9	1	S, W, N, Z	B, D	S	P, R	DAL, SHA, TEP
RWR81#11R0%&	11.0	1	S, W, N, Z	B, D, F	S	P, R	DAL, SHA, TEP
RWR81#11R1%&	11.1	1	S, W, N, Z	B, D	S	P, R	DAL, SHA, TEP
RWR81#11R3%&	11.3	1	S, W, N, Z	B, D, F	S	P, R	DAL, SHA, TEP
RWR81#11R4%&	11.4	1	S, W, N, Z	B, D	S	P, R	DAL, SHA, TEP
RWR81#11R5%&	11.5	1	S, W, N, Z	B, D, F	S	P, R	DAL, SHA, TEP
RWR81#11R7%&	11.7	1	S, W, N, Z	B, D	S	P, R	DAL, SHA, TEP
RWR81#11R8%&	11.8	1	S, W, N, Z	B, D, F	S	P, R	DAL, SHA, TEP
RWR81#12R0%&	12.0	1	S, W, N, Z	B, D	S	P, R	DAL, SHA, TEP
RWR81#12R1%&	12.1	1	S, W, N, Z	B, D, F	S	P, R	DAL, SHA, TEP
RWR81#12R3%&	12.3	1	S, W, N, Z	B, D	S	P, R	DAL, SHA, TEP
RWR81#12R4%&	12.4	1	S, W, N, Z	B, D, F	S	P, R	DAL, SHA, TEP
RWR81#12R6%&	12.6	1	S, W, N, Z	B, D	S	P, R	DAL, SHA, TEP
RWR81#12R7%&	12.7	1	S, W, N, Z	B, D, F	S	P, R	DAL, SHA, TEP
RWR81#12R9%&	12.9	1	S, W, N, Z	B, D	S	P, R	DAL, SHA, TEP
RWR81#13R0%&	13.0	1	S, W, N, Z	B, D, F	S	P, R	DAL, SHA, TEP
RWR81#13R2%&	13.2	1	S, W, N, Z	B, D	S	P, R	DAL, SHA, TEP

RWR81#13R3%&	13.3	1	S, W, N, Z	B, D, F	S	P, R	DAL, SHA, TEP
RWR81#13R5%&	13.5	1	S, W, N, Z	B, D	S	P, R	DAL, SHA, TEP
RWR81#13R7%&	13.7	1	S, W, N, Z	B, D, F	S	P, R	DAL, SHA, TEP
RWR81#13R8%&	13.8	1	S, W, N, Z	B, D	S	P, R	DAL, SHA, TEP
RWR81#14R0%&	14.0	1	S, W, N, Z	B, D, F	S	P, R	DAL, SHA, TEP
RWR81#14R2%&	14.2	1	S, W, N, Z	B, D	S	P, R	DAL, SHA, TEP
RWR81#14R3%&	14.3	1	S, W, N, Z	B, D, F	S	P, R	DAL, SHA, TEP
RWR81#14R5%&	14.5	1	S, W, N, Z	B, D	S	P, R	DAL, SHA, TEP
RWR81#14R7%&	14.7	1	S, W, N, Z	B, D, F	S	P, R	DAL, SHA, TEP
RWR81#14R9%&	14.9	1	S, W, N, Z	B, D	S	P, R	DAL, SHA, TEP
RWR81#15R0%&	15.0	1	S, W, N, Z	B, D, F	S	P, R	DAL, SHA, TEP
RWR81#15R2%&	15.2	1	S, W, N, Z	B, D	S	P, R	DAL, SHA, TEP
RWR81#15R4%&	15.4	1	S, W, N, Z	B, D, F	S	P, R	DAL, SHA, TEP
RWR81#15R6%&	15.6	1	S, W, N, Z	B, D	S	P, R	DAL, SHA, TEP
RWR81#15R8%&	15.8	1	S, W, N, Z	B, D, F	S	P, R	DAL, SHA, TEP
RWR81#16R0%&	16.0	1	S, W, N, Z	B, D	S	P, R	DAL, SHA, TEP
RWR81#16R2%&	16.2	1	S, W, N, Z	B, D, F	S	P, R	DAL, SHA, TEP
RWR81#16R4%&	16.4	1	S, W, N, Z	B, D	S	P, R	DAL, SHA, TEP
RWR81#16R5%&	16.5	1	S, W, N, Z	B, D, F	S	P, R	DAL, SHA, TEP
RWR81#16R7%&	16.7	1	S, W, N, Z	B, D	S	P, R	DAL, SHA, TEP
RWR81#16R9%&	16.9	1	S, W, N, Z	B, D, F	S	P, R	DAL, SHA, TEP
RWR81#17R2%&	17.2	1	S, W, N, Z	B, D	S	P, R	DAL, SHA, TEP
RWR81#17R4%&	17.4	1	S, W, N, Z	B, D, F	S	P, R	DAL, SHA, TEP
RWR81#17R6%&	17.6	1	S, W, N, Z	B, D	S	P, R	DAL, SHA, TEP
RWR81#17R8%&	17.8	1	S, W, N, Z	B, D, F	S	P, R	DAL, SHA, TEP
RWR81#18R0%&	18.0	1	S, W, N, Z	B, D, F	S	P, R	DAL, SHA, TEP
RWR81#18R2%&	18.2	1	S, W, N, Z	B, D, F	S	P, R	DAL, SHA, TEP
RWR81#18R4%&	18.4	1	S, W, N, Z	B, D	S	P, R	DAL, SHA, TEP
RWR81#18R7%&	18.7	1	S, W, N, Z	B, D, F	S	P, R	DAL, SHA, TEP
RWR81#18R9%&	18.9	1	S, W, N, Z	B, D	S	P, R	DAL, SHA, TEP
RWR81#19R1%&	19.1	1	S, W, N, Z	B, D, F	S	P, R	DAL, SHA, TEP
RWR81#19R3%&	19.3	1	S, W, N, Z	B, D	S	P, R	DAL, SHA, TEP
RWR81#19R6%&	19.6	1	S, W, N, Z	B, D, F	S	P, R	DAL, SHA, TEP
RWR81#19R8%&	19.8	1	S, W, N, Z	B, D	S	P, R	DAL, SHA, TEP
RWR81#20R0%&	20.0	1	S, W, N, Z	B, D, F	S	P, R	DAL, SHA, TEP
RWR81#20R3%&	20.3	1	S, W, N, Z	B, D	S	P, R	DAL, SHA, TEP
RWR81#20R5%&	20.5	1	S, W, N, Z	B, D, F	S	P, R	DAL, SHA, TEP
RWR81#20R8%&	20.8	1	S, W, N, Z	B, D	S	P, R	DAL, SHA, TEP
RWR81#21R0%&	21.0	1	S, W, N, Z	B, D, F	S	P, R	DAL, SHA, TEP
RWR81#21R3%&	21.3	1	S, W, N, Z	B, D	S	P, R	DAL, SHA, TEP
RWR81#21R5%&	21.5	1	S, W, N, Z	B, D, F	S	P, R	DAL, SHA, TEP
RWR81#21R8%&	21.8	1	S, W, N, Z	B, D	S	P, R	DAL, SHA, TEP
RWR81#22R1%&	22.1	1	S, W, N, Z	B, D, F	S	P, R	DAL, SHA, TEP
RWR81#22R3%&	22.3	1	S, W, N, Z	B, D	S	P, R	DAL, SHA, TEP
RWR81#22R6%&	22.6	1	S, W, N, Z	B, D, F	S	P, R	DAL, SHA, TEP
RWR81#22R9%&	22.9	1	S, W, N, Z	B, D	S	P, R	DAL, SHA, TEP
RWR81#23R2%&	23.2	1	S, W, N, Z	B, D, F	S	P, R	DAL, SHA, TEP

RWR81#23R4%&	23.4	1	S, W, N, Z	B, D	S	P, R	DAL, SHA, TEP
RWR81#23R7%&	23.7	1	S, W, N, Z	B, D, F	S	P, R	DAL, SHA, TEP
RWR81#24R0%&	24.0	1	S, W, N, Z	B, D	S	P, R	DAL, SHA, TEP
RWR81#24R3%&	24.3	1	S, W, N, Z	B, D, F	S	P, R	DAL, SHA, TEP
RWR81#24R6%&	24.6	1	S, W, N, Z	B, D	S	P, R	DAL, SHA, TEP
RWR81#24R9%&	24.9	1	S, W, N, Z	B, D, F	S	P, R	DAL, SHA, TEP
RWR81#25R2%&	25.2	1	S, W, N, Z	B, D	S	P, R	DAL, SHA, TEP
RWR81#25R5%&	25.5	1	S, W, N, Z	B, D, F	S	P, R	DAL, SHA, TEP
RWR81#25R8%&	25.8	1	S, W, N, Z	B, D	S	P, R	DAL, SHA, TEP
RWR81#26R1%&	26.1	1	S, W, N, Z	B, D, F	S	P, R	DAL, SHA, TEP
RWR81#26R4%&	26.4	1	S, W, N, Z	B, D	S	P, R	DAL, SHA, TEP
RWR81#26R7%&	26.7	1	S, W, N, Z	B, D, F	S	P, R	DAL, SHA, TEP
RWR81#27R1%&	27.1	1	S, W, N, Z	B, D	S	P, R	DAL, SHA, TEP
RWR81#27R4%&	27.4	1	S, W, N, Z	B, D, F	S	P, R	DAL, SHA, TEP
RWR81#27R7%&	27.7	1	S, W, N, Z	B, D	S	P, R	DAL, SHA, TEP
RWR81#28R0%&	28.0	1	S, W, N, Z	B, D, F	S	P, R	DAL, SHA, TEP
RWR81#28R4%&	28.4	1	S, W, N, Z	B, D	S	P, R	DAL, SHA, TEP
RWR81#28R7%&	28.7	1	S, W, N, Z	B, D, F	S	P, R	DAL, SHA, TEP
RWR81#29R1%&	29.1	1	S, W, N, Z	B, D	S	P, R	DAL, SHA, TEP
RWR81#29R4%&	29.4	1	S, W, N, Z	B, D, F	S	P, R	DAL, SHA, TEP
RWR81#29R8%&	29.8	1	S, W, N, Z	B, D	S	P, R	DAL, SHA, TEP
RWR81#30R1%&	30.1	1	S, W, N, Z	B, D, F	S	P, R	DAL, SHA, TEP
RWR81#30R5%&	30.5	1	S, W, N, Z	B, D	S	P, R	DAL, SHA, TEP
RWR81#30R9%&	30.9	1	S, W, N, Z	B, D, F	S	P, R	DAL, SHA, TEP
RWR81#31R2%&	31.2	1	S, W, N, Z	B, D	S	P, R	DAL, SHA, TEP
RWR81#31R6%&	31.6	1	S, W, N, Z	B, D, F	S	P, R	DAL, SHA, TEP
RWR81#32R0%&	32.0	1	S, W, N, Z	B, D	S	P, R	DAL, SHA, TEP
RWR81#32R4%&	32.4	1	S, W, N, Z	B, D, F	S	P, R	DAL, SHA, TEP
RWR81#32R8%&	32.8	1	S, W, N, Z	B, D	S	P, R	DAL, SHA, TEP
RWR81#33R2%&	33.2	1	S, W, N, Z	B, D, F	S	P, R	DAL, SHA, TEP
RWR81#33R6%&	33.6	1	S, W, N, Z	B, D	S	P, R	DAL, SHA, TEP
RWR81#34R0%&	34.0	1	S, W, N, Z	B, D, F	S	P, R	DAL, SHA, TEP
RWR81#34R4%&	34.4	1	S, W, N, Z	B, D	S	P, R	DAL, SHA, TEP
RWR81#34R8%&	34.8	1	S, W, N, Z	B, D, F	S	P, R	DAL, SHA, TEP
RWR81#35R2%&	35.2	1	S, W, N, Z	B, D	S	P, R	DAL, SHA, TEP
RWR81#35R7%&	35.7	1	S, W, N, Z	B, D, F	S	P, R	DAL, SHA, TEP
RWR81#36R1%&	36.1	1	S, W, N, Z	B, D	S	P, R	DAL, SHA, TEP
RWR81#36R5%&	36.5	1	S, W, N, Z	B, D, F	S	P, R	DAL, SHA, TEP
RWR81#37R0%&	37.0	1	S, W, N, Z	B, D	S	P, R	DAL, SHA, TEP
RWR81#37R4%&	37.4	1	S, W, N, Z	B, D, F	S	P, R	DAL, SHA, TEP
RWR81#37R9%&	37.9	1	S, W, N, Z	B, D	S	P, R	DAL, SHA, TEP
RWR81#38R3%&	38.3	1	S, W, N, Z	B, D, F	S	P, R	DAL, SHA, TEP
RWR81#38R8%&	38.8	1	S, W, N, Z	B, D	S	P, R	DAL, SHA, TEP
RWR81#39R2%&	39.2	1	S, W, N, Z	B, D, F	S	P, R	DAL, SHA, TEP
RWR81#39R7%&	39.7	1	S, W, N, Z	B, D	S	P, R	DAL, SHA, TEP
RWR81#40R2%&	40.2	1	S, W, N, Z	B, D, F	S	P, R	DAL, SHA, TEP
RWR81#40R7%&	40.7	1	S, W, N, Z	B, D	S	P, R	DAL, SHA, TEP

RWR81#41R2%&	41.2	1	S, W, N, Z	B, D, F	S	P, R	DAL, SHA, TEP
RWR81#41R7%&	41.7	1	S, W, N, Z	B, D	S	P, R	DAL, SHA, TEP
RWR81#42R2%&	42.2	1	S, W, N, Z	B, D, F	S	P, R	DAL, SHA, TEP
RWR81#42R7%&	42.7	1	S, W, N, Z	B, D	S	P, R	DAL, SHA, TEP
RWR81#43R2%&	43.2	1	S, W, N, Z	B, D, F	S	P, R	DAL, SHA, TEP
RWR81#43R7%&	43.7	1	S, W, N, Z	B, D	S	P, R	DAL, SHA, TEP
RWR81#44R2%&	44.2	1	S, W, N, Z	B, D, F	S	P, R	DAL, SHA, TEP
RWR81#44R8%&	44.8	1	S, W, N, Z	B, D	S	P, R	DAL, SHA, TEP
RWR81#45R3%&	45.3	1	S, W, N, Z	B, D, F	S	P, R	DAL, SHA, TEP
RWR81#45R9%&	45.9	1	S, W, N, Z	B, D	S	P, R	DAL, SHA, TEP
RWR81#46R4%&	46.4	1	S, W, N, Z	B, D, F	S	P, R	DAL, SHA, TEP
RWR81#47R0%&	47.0	1	S, W, N, Z	B, D	S	P, R	DAL, SHA, TEP
RWR81#47R5%&	47.5	1	S, W, N, Z	B, D, F	S	P, R	DAL, SHA, TEP
RWR81#48R1%&	48.1	1	S, W, N, Z	B, D	S	P, R	DAL, SHA, TEP
RWR81#48R7%&	48.7	1	S, W, N, Z	B, D, F	S	P, R	DAL, SHA, TEP
RWR81#49R3%&	49.3	1	S, W, N, Z	B, D	S	P, R	DAL, SHA, TEP
RWR81#49R9%&	49.9	1	S, W, N, Z	B, D, F	S	P, R	DAL, SHA, TEP
RWR81#50R5%&	50.5	1	S, W, N, Z	B, D	S	P, R	DAL, SHA, TEP
RWR81#51R1%&	51.1	1	S, W, N, Z	B, D, F	S	P, R	DAL, SHA, TEP
RWR81#51R7%&	51.7	1	S, W, N, Z	B, D	S	P, R	DAL, SHA, TEP
RWR81#52R3%&	52.3	1	S, W, N, Z	B, D, F	S	P, R	DAL, SHA, TEP
RWR81#53R0%&	53.0	1	S, W, N, Z	B, D	S	P, R	DAL, SHA, TEP
RWR81#53R6%&	53.6	1	S, W, N, Z	B, D, F	S	P, R	DAL, SHA, TEP
RWR81#54R2%&	54.2	1	S, W, N, Z	B, D	S	P, R	DAL, SHA, TEP
RWR81#54R9%&	54.9	1	S, W, N, Z	B, D, F	S	P, R	DAL, SHA, TEP
RWR81#55R6%&	55.6	1	S, W, N, Z	B, D	S	P, R	DAL, SHA, TEP
RWR81#56R2%&	56.2	1	S, W, N, Z	B, D, F	S	P, R	DAL, SHA, TEP
RWR81#56R9%&	56.9	1	S, W, N, Z	B, D	S	P, R	DAL, SHA, TEP
RWR81#57R6%&	57.6	1	S, W, N, Z	B, D, F	S	P, R	DAL, SHA, TEP
RWR81#58R3%&	58.3	1	S, W, N, Z	B, D	S	P, R	DAL, SHA, TEP
RWR81#59R0%&	59.0	1	S, W, N, Z	B, D, F	S	P, R	DAL, SHA, TEP
RWR81#59R7%&	59.7	1	S, W, N, Z	B, D	S	P, R	DAL, SHA, TEP
RWR81#60R4%&	60.4	1	S, W, N, Z	B, D, F	S	P, R	DAL, SHA, TEP
RWR81#61R2%&	61.2	1	S, W, N, Z	B, D	S	P, R	DAL, SHA, TEP
RWR81#61R9%&	61.9	1	S, W, N, Z	B, D, F	S	P, R	DAL, SHA, TEP
RWR81#62R6%&	62.6	1	S, W, N, Z	B, D	S	P, R	DAL, SHA, TEP
RWR81#63R4%&	63.4	1	S, W, N, Z	B, D, F	S	P, R	DAL, SHA, TEP
RWR81#64R2%&	64.2	1	S, W, N, Z	B, D	S	P, R	DAL, SHA, TEP
RWR81#64R9%&	64.9	1	S, W, N, Z	B, D, F	S	P, R	DAL, SHA, TEP
RWR81#65R7%&	65.7	1	S, W, N, Z	B, D	S	P, R	DAL, SHA, TEP
RWR81#66R5%&	66.5	1	S, W, N, Z	B, D, F	S	P, R	DAL, SHA, TEP
RWR81#67R3%&	67.3	1	S, W, N, Z	B, D	S	P, R	DAL, SHA, TEP
RWR81#68R1%&	68.1	1	S, W, N, Z	B, D, F	S	P, R	DAL, SHA, TEP
RWR81#69R0%&	69.0	1	S, W, N, Z	B, D	S	P, R	DAL, SHA, TEP
RWR81#69R8%&	69.8	1	S, W, N, Z	B, D, F	S	P, R	DAL, SHA, TEP
RWR81#70R6%&	70.6	1	S, W, N, Z	B, D	S	P, R	DAL, SHA, TEP
RWR81#71R5%&	71.5	1	S, W, N, Z	B, D, F	S	P, R	DAL, SHA, TEP

RWR81#72R3%&	72.3	1	S, W, N, Z	B, D	S	P, R	DAL, SHA, TEP
RWR81#73R2%&	73.2	1	S, W, N, Z	B, D, F	S	P, R	DAL, SHA, TEP
RWR81#74R1%&	74.1	1	S, W, N, Z	B, D	S	P, R	DAL, SHA, TEP
RWR81#75R0%&	75.0	1	S, W, N, Z	B, D, F	S	P, R	DAL, SHA, TEP
RWR81#75R9%&	75.9	1	S, W, N, Z	B, D	S	P, R	DAL, SHA, TEP
RWR81#76R8%&.	76.8	1	S, W, N, Z	B, D, F	S	P, R	DAL, SHA, TEP
RWR81#77R7%&.	77.7	1	S, W, N, Z	B, D	S	P, R	DAL, SHA, TEP
RWR81#78R7%&	78.7	1	S, W, N, Z	B, D, F	S	P, R	DAL, SHA, TEP
RWR81#79R6%&	79.6	1	S, W, N, Z	B, D	S	P, R	DAL, SHA, TEP
RWR81#80R6%&	80.6	1	S, W, N, Z	B, D, F	S	P, R	DAL, SHA, TEP
RWR81#81R6%&	81.6	1	S, W, N, Z	B, D	S	P, R	DAL, SHA, TEP
RWR81#82R5%&	82.5	1	S, W, N, Z	B, D, F	S	P, R	DAL, SHA, TEP
RWR81#83R5%&	83.5	1	S, W, N, Z	B, D	S	P, R	DAL, SHA, TEP
RWR81#84R5%&	84.5	1	S, W, N, Z	B, D, F	S	P, R	DAL, SHA, TEP
RWR81#85R6%&	85.6	1	S, W, N, Z	B, D	S	P, R	DAL, SHA, TEP
RWR81#86R6%&	86.6	1	S, W, N, Z	B, D, F	S	P, R	DAL, SHA, TEP
RWR81#87R6%&	87.6	1	S, W, N, Z	B, D	S	P, R	DAL, SHA, TEP
RWR81#88R7%&	88.7	1	S, W, N, Z	B, D, F	S	P, R	DAL, SHA, TEP
RWR81#89R8%&	89.8	1	S, W, N, Z	B, D	S	P, R	DAL, SHA, TEP
RWR81#90R9%&	90.9	1	S, W, N, Z	B, D, F	S	P, R	DAL, SHA, TEP
RWR81#92R0%&	92.0	1	S, W, N, Z	B, D	S	P, R	DAL, SHA, TEP
RWR81#93R1%&	93.1	1	S, W, N, Z	B, D, F	S	P, R	DAL, SHA, TEP
RWR81#94R2%&	94.2	1	S, W, N, Z	B, D	S	P, R	DAL, SHA, TEP
RWR81#95R3%&	95.3	1	S, W, N, Z	B, D, F	S	P, R	DAL, SHA, TEP
RWR81#96R5%&	96.5	1	S, W, N, Z	B, D	S	P, R	DAL, SHA, TEP
RWR81#97R6%&	97.6	1	S, W, N, Z	B, D, F	S	P, R	DAL, SHA, TEP
RWR81#98R8%&	98.8	1	S, W, N, Z	B, D	S	P, R	DAL, SHA, TEP
RWR81#1000%&	100	1	S, W, N, Z	B, D, F	S	P, R	DAL, SHA, TEP
RWR81#1010%&	101	1	S, W, N, Z	B, D	S	P, R	DAL, SHA, TEP
RWR81#1020%&	102	1	S, W, N, Z	B, D, F	S	P, R	DAL, SHA, TEP
RWR81#1040%&	104	1	S, W, N, Z	B, D	S	P, R	DAL, SHA, TEP
RWR81#1050%&	105	1	S, W, N, Z	B, D, F	S	P, R	DAL, SHA, TEP
RWR81#1060%&	106	1	S, W, N, Z	B, D	S	P, R	DAL, SHA, TEP
RWR81#1070%&	107	1	S, W, N, Z	B, D, F	S	P, R	DAL, SHA, TEP
RWR81#1090%&	109	1	S, W, N, Z	B, D	S	P, R	DAL, SHA, TEP
RWR81#1100%&	110	1	S, W, N, Z	B, D, F	S	P, R	DAL, SHA, TEP
RWR81#1110%&	111	1	S, W, N, Z	B, D	S	P, R	DAL, SHA, TEP
RWR81#1130%&	113	1	S, W, N, Z	B, D, F	S	P, R	DAL, SHA, TEP
RWR81#1140%&	114	1	S, W, N, Z	B, D	S	P, R	DAL, SHA, TEP
RWR81#1150%&	115	1	S, W, N, Z	B, D, F	S	P, R	DAL, SHA, TEP
RWR81#1170%&	117	1	S, W, N, Z	B, D	S	P, R	DAL, SHA, TEP
RWR81#1180%&	118	1	S, W, N, Z	B, D, F	S	P, R	DAL, SHA, TEP
RWR81#1200%&	120	1	S, W, N, Z	B, D	S	P, R	DAL, SHA, TEP
RWR81#1210%&	121	1	S, W, N, Z	B, D, F	S	P, R	DAL, SHA, TEP
RWR81#1230%&	123	1	S, W, N, Z	B, D	S	P, R	DAL, SHA, TEP
RWR81#1240%&	124	1	S, W, N, Z	B, D, F	S	P, R	DAL, SHA, TEP
RWR81#1260%&	126	1	S, W, N, Z	B, D	S	P, R	DAL, SHA, TEP

RWR81#1270%&	127	1	S, W, N, Z	B, D, F	S	P, R	DAL, SHA, TEP
RWR81#1290%&	129	1	S, W, N, Z	B, D	S	P, R	DAL, SHA, TEP
RWR81#1300%&	130	1	S, W, N, Z	B, D, F	S	P, R	DAL, SHA, TEP
RWR81#1320%&	132	1	S, W, N, Z	B, D	S	P, R	DAL, SHA, TEP
RWR81#1330%&	133	1	S, W, N, Z	B, D, F	S	P, R	DAL, SHA, TEP
RWR81#1350%&	135	1	S, W, N, Z	B, D	S	P, R	DAL, SHA, TEP
RWR81#1370%&	137	1	S, W, N, Z	B, D, F	S	P, R	DAL, SHA, TEP
RWR81#1380%&	138	1	S, W, N, Z	B, D	S	P, R	DAL, SHA, TEP
RWR81#1400%&	140	1	S, W, N, Z	B, D, F	S	P, R	DAL, SHA, TEP
RWR81#1420%&	142	1	S, W, N, Z	B, D	S	P, R	DAL, SHA, TEP
RWR81#1430%&	143	1	S, W, N, Z	B, D, F	S	P, R	DAL, SHA, TEP
RWR81#1450%&	145	1	S, W, N, Z	B, D	S	P, R	DAL, SHA, TEP
RWR81#1470%&	147	1	S, W, N, Z	B, D, F	S	P, R	DAL, SHA, TEP
RWR81#1490%&	149	1	S, W, N, Z	B, D	S	P, R	DAL, SHA, TEP
RWR81#1500%&	150	1	S, W, N, Z	B, D, F	S	P, R	DAL, SHA, TEP
RWR81#1520%&	152	1	S, W, N, Z	B, D	S	P, R	DAL, SHA, TEP
RWR81#1540%&	154	1	S, W, N, Z	B, D, F	S	P, R	DAL, SHA, TEP
RWR81#1560%&	156	1	S, W, N, Z	B, D	S	P, R	DAL, SHA, TEP
RWR81#1580%&	158	1	S, W, N, Z	B, D, F	S	P, R	DAL, SHA, TEP
RWR81#1600%&	160	1	S, W, N, Z	B, D	S	P, R	DAL, SHA, TEP
RWR81#1620%&	162	1	S, W, N, Z	B, D, F	S	P, R	DAL, SHA, TEP
RWR81#1640%&	164	1	S, W, N, Z	B, D	S	P, R	DAL, SHA, TEP
RWR81#1650%&	165	1	S, W, N, Z	B, D, F	S	P, R	DAL, SHA, TEP
RWR81#1670%&	167	1	S, W, N, Z	B, D	S	P, R	DAL, SHA, TEP
RWR81#1690%&	169	1	S, W, N, Z	B, D, F	S	P, R	DAL, SHA, TEP
RWR81#1720%&	172	1	S, W, N, Z	B, D	S	P, R	DAL, SHA, TEP
RWR81#1740%&	174	1	S, W, N, Z	B, D, F	S	P, R	DAL, SHA, TEP
RWR81#1760%&	176	1	S, W, N, Z	B, D	S	P, R	DAL, SHA, TEP
RWR81#1780%&	178	1	S, W, N, Z	B, D, F	S	P, R	DAL, SHA, TEP
RWR81#1800%&	180	1	S, W, N, Z	B, D, F	S	P, R	DAL, SHA, TEP
RWR81#1820%&	182	1	S, W, N, Z	B, D, F	S	P, R	DAL, SHA, TEP
RWR81#1840%&	184	1	S, W, N, Z	B, D	S	P, R	DAL, SHA, TEP
RWR81#1870%&	187	1	S, W, N, Z	B, D, F	S	P, R	DAL, SHA, TEP
RWR81#1890%&	189	1	S, W, N, Z	B, D	S	P, R	DAL, SHA, TEP
RWR81#1910%&	191	1	S, W, N, Z	B, D, F	S	P, R	DAL, SHA, TEP
RWR81#1930%&	193	1	S, W, N, Z	B, D	S	P, R	DAL, SHA, TEP
RWR81#1960%&	196	1	S, W, N, Z	B, D, F	S	P, R	DAL, SHA, TEP
RWR81#1980%&	198	1	S, W, N, Z	B, D	S	P, R	DAL, SHA, TEP
RWR81#2000%&	200	1	S, W, N, Z	B, D, F	S	P, R	DAL, SHA, TEP
RWR81#2030%&	203	1	S, W, N, Z	B, D	S	P, R	DAL, SHA, TEP
RWR81#2050%&	205	1	S, W, N, Z	B, D, F	S	P, R	DAL, SHA, TEP
RWR81#2080%&	208	1	S, W, N, Z	B, D	S	P, R	DAL, SHA, TEP
RWR81#2100%&	210	1	S, W, N, Z	B, D, F	S	P, R	DAL, SHA, TEP
RWR81#2130%&	213	1	S, W, N, Z	B, D	S	P, R	DAL, SHA, TEP
RWR81#2150%&	215	1	S, W, N, Z	B, D, F	S	P, R	DAL, SHA, TEP
RWR81#2180%&	218	1	S, W, N, Z	B, D	S	P, R	DAL, SHA, TEP
RWR81#2210%&	221	1	S, W, N, Z	B, D, F	S	P, R	DAL, SHA, TEP

RWR81#2230%&	223	1	S, W, N, Z	B, D	S	P, R	DAL, SHA, TEP
RWR81#2260%&	226	1	S, W, N, Z	B, D, F	S	P, R	DAL, SHA, TEP
RWR81#2290%&	229	1	S, W, N, Z	B, D	S	P, R	DAL, SHA, TEP
RWR81#2320%&	232	1	S, W, N, Z	B, D, F	S	P, R	DAL, SHA, TEP
RWR81#2340%&	234	1	S, W, N, Z	B, D	S	P, R	DAL, SHA, TEP
RWR81#2370%&	237	1	S, W	B, D, F	S	P, R	DAL, SHA, TEP
RWR81#2400%&	240	1	S, W	B, D	S	P, R	DAL, SHA, TEP
RWR81#2430%&	243	1	S, W	B, D, F	S	P, R	DAL, SHA, TEP
RWR81#2460%&	246	1	S, W	B, D	S	P, R	DAL, SHA, TEP
RWR81#2490%&	249	1	S, W	B, D, F	S	P, R	DAL, SHA, TEP
RWR81#2520%&	252	1	S, W	B, D	S	P, R	DAL, SHA, TEP
RWR81#2550%&	255	1	S, W	B, D, F	S	P, R	DAL, SHA, TEP
RWR81#2580%&	258	1	S, W	B, D	S	P, R	DAL, SHA, TEP
RWR81#2610%&	261	1	S, W	B, D, F	S	P, R	DAL, SHA, TEP
RWR81#2640%&	264	1	S, W	B, D	S	P, R	DAL, SHA, TEP
RWR81#2670%&	267	1	S, W	B, D, F	S	P, R	DAL, SHA, TEP
RWR81#2710%&	271	1	S, W	B, D	S	P, R	DAL, SHA, TEP
RWR81#2740%&	274	1	S, W	B, D, F	S	P, R	DAL, SHA, TEP
RWR81#2770%&	277	1	S, W	B, D	S	P, R	DAL, SHA, TEP
RWR81#2800%&	280	1	S, W	B, D, F	S	P, R	DAL, SHA, TEP
RWR81#2840%&	284	1	S, W	B, D	S	P, R	DAL, SHA, TEP
RWR81#2870%&	287	1	S, W	B, D, F	S	P, R	DAL, SHA, TEP
RWR81#2910%&	291	1	S, W	B, D	S	P, R	DAL, SHA, TEP
RWR81#2940%&	294	1	S, W	B, D, F	S	P, R	DAL, SHA, TEP
RWR81#2980%&	298	1	S, W	B, D	S	P, R	DAL, SHA, TEP
RWR81#3010%&	301	1	S, W	B, D, F	S	P, R	DAL, SHA, TEP
RWR81#3050%&	305	1	S, W	B, D	S	P, R	DAL, SHA, TEP
RWR81#3090%&	309	1	S, W	B, D, F	S	P, R	DAL, SHA, TEP
RWR81#3120%&	312	1	S, W	B, D	S	P, R	DAL, SHA, TEP
RWR81#3160%&	316	1	S, W	B, D, F	S	P, R	DAL, SHA, TEP
RWR81#3200%&	320	1	S, W	B, D	S	P, R	DAL, SHA, TEP
RWR81#3240%&	324	1	S, W	B, D, F	S	P, R	DAL, SHA, TEP
RWR81#3280%&	328	1	S, W	B, D	S	P, R	DAL, SHA, TEP
RWR81#3320%&	332	1	S, W	B, D, F	S	P, R	DAL, SHA, TEP
RWR81#3360%&	336	1	S, W	B, D	S	P, R	DAL, SHA, TEP
RWR81#3400%&	340	1	S, W	B, D, F	S	P, R	DAL, SHA, TEP
RWR81#3440%&	344	1	S, W	B, D	S	P, R	DAL, SHA, TEP
RWR81#3480%&	348	1	S, W	B, D, F	S	P, R	DAL, SHA, TEP
RWR81#3520%&	352	1	S, W	B, D	S	P, R	DAL, SHA, TEP
RWR81#3570%&	357	1	S, W	B, D, F	S	P, R	DAL, SHA, TEP
RWR81#3610%&	361	1	S, W	B, D	S	P, R	DAL, SHA, TEP
RWR81#3650%&	365	1	S, W	B, D, F	S	P, R	DAL, SHA, TEP
RWR81#3700%&	370	1	S, W	B, D	S	P, R	DAL, SHA, TEP
RWR81#3740%&	374	1	S, W	B, D, F	S	P, R	DAL, SHA, TEP
RWR81#3790%&	379	1	S, W	B, D	S	P, R	DAL, SHA, TEP
RWR81#3830%&	383	1	S, W	B, D, F	S	P, R	DAL, SHA, TEP
RWR81#3880%&	388	1	S, W	B, D	S	P, R	DAL, SHA, TEP

RWR81#3920%&	392	1	S, W	B, D, F	S	P, R	DAL, SHA, TEP
RWR81#3970%&	397	1	S, W	B, D	S	P, R	DAL, SHA, TEP
RWR81#4020%&	402	1	S, W	B, D, F	S	P, R	DAL, SHA, TEP
RWR81#4070%&	407	1	S, W	B, D	S	P, R	DAL, SHA, TEP
RWR81#4120%&	412	1	S, W	B, D, F	S	P, R	DAL, SHA, TEP
RWR81#4170%&	417	1	S, W	B, D	S	P, R	DAL, SHA, TEP
RWR81#4220%&	422	1	S, W	B, D, F	S	P, R	DAL, SHA, TEP
RWR81#4270%&	427	1	S, W	B, D	S	P, R	DAL, SHA, TEP
RWR81#4320%&	432	1	S, W	B, D, F	S	P, R	DAL, SHA, TEP
RWR81#4370%&	437	1	S, W	B, D	S	P, R	DAL, SHA, TEP
RWR81#4420%&	442	1	S, W	B, D, F	S	P, R	DAL, SHA, TEP
RWR81#4480%&	448	1	S, W	B, D	S	P, R	DAL, SHA, TEP
RWR81#4530%&	453	1	S, W	B, D, F	S	P, R	DAL, SHA, TEP
RWR81#4590%&	459	1	S, W	B, D	S	P, R	DAL, SHA, TEP
RWR81#4640%&	464	1	S, W	B, D, F	S	P, R	DAL, SHA, TEP
RWR81#4700%&	470	1	S, W	B, D	S	P, R	DAL, SHA, TEP
RWR81#4750%&	475	1	S, W	B, D, F	S	P, R	DAL, SHA, TEP
RWR81#4810%&	481	1	S, W	B, D	S	P, R	DAL, SHA, TEP
RWR81#4870%&	487	1	S, W	B, D, F	S	P, R	DAL, SHA, TEP
RWR81#4930%&	493	1	S, W	B, D	S	P, R	DAL, SHA, TEP

RWR81 RESISTORS DECADE BREAKDOWN

Click on the link below to see the associated parts selection listing:

Resistance Range
0.1 Ohms through 0.988 Ohms
1.00 Ohms through 9.88 Ohms
10.0 Ohms through 98.8 Ohms
100 Ohms through 493 Ohms

RWR81 Wirewound Resistors: 0.100 Ohms through 0.980 Ohms

	Resistance	Power	Terminal	Resistance	Level 1	Level 2	
Part Number	Value (Ohms)	Rating (W)	Characteristic (#)	Tolerance (%)	(FRL)(&)	(FRL)(&)	Manufacturer
RWR81#R100%&	0.100	1	S, W, N, Z	B, D, F	S	P, R	DAL, SHA, TEP
RWR81#R101%&	0.101	1	S, W, N, Z	B, D	S	P, R	DAL, SHA, TEP
RWR81#R102%&	0.102	1	S, W, N, Z	B, D, F	S	P, R	DAL, SHA, TEP
RWR81#R104%&	0.104	1	S, W, N, Z	B, D	S	P, R	DAL, SHA, TEP
RWR81#R105%&	0.105	1	S, W, N, Z	B, D, F	S	P, R	DAL, SHA, TEP
RWR81#R106%&	0.106	1	S, W, N, Z	B, D	S	P, R	DAL, SHA, TEP
RWR81#R107%&	0.107	1	S, W, N, Z	B, D, F	S	P, R	DAL, SHA, TEP
	Resistance	Power	Terminal	Resistance	Level 1	Level 2	
Part Number	Value (Ohms)	Rating (W)	Characteristic (#)	Tolerance (%)	(FRL)(&)	(FRL)(&)	Manufacturer
RWR81#R109%&	0.109	1	S, W, N, Z	B, D	S	P, R	DAL, SHA, TEP

RWR81#R110%&	0.110	1	S, W, N, Z	B, D, F	S	P, R	DAL, SHA, TEP
RWR81#R111%&	0.111	1	S, W, N, Z	B, D	S	P, R	DAL, SHA, TEP
RWR81#R113%&	0.113	1	S, W, N, Z	B, D, F	S	P, R	DAL, SHA, TEP
RWR81#R114%&	0.114	1	S, W, N, Z	B, D	S	P, R	DAL, SHA, TEP
RWR81#R115%&	0.115	1	S, W, N, Z	B, D, F	S	P, R	DAL, SHA, TEP
RWR81#R117%&	0.117	1	S, W, N, Z	B, D	S	P, R	DAL, SHA, TEP
	Resistance	Power	Terminal	Resistance	Level 1	Level 2	
Part Number	Value (Ohms)	Rating (W)	Characteristic (#)	Tolerance (%)	(FRL)(&)	(FRL)(&)	Manufacturer
RWR81#R118%&	0.118	1	S, W, N, Z	B, D, F	S	P, R	DAL, SHA, TEP
RWR81#R120%&	0.120	1	S, W, N, Z	B, D	S	P, R	DAL, SHA, TEP
RWR81#R121%&	0.121	1	S, W, N, Z	B, D, F	S	P, R	DAL, SHA, TEP
RWR81#R123%&	0.123	1	S, W, N, Z	B, D	S	P, R	DAL, SHA, TEP
RWR81#R124%&	0.124	1	S, W, N, Z	B, D, F	S	P, R	DAL, SHA, TEP
RWR81#R126%&	0.126	1	S, W, N, Z	B, D	S	P, R	DAL, SHA, TEP
RWR81#R127%&	0.127	1	S, W, N, Z	B, D, F	S	P, R	DAL, SHA, TEP
	Resistance	Power	Terminal	Resistance	Level 1	Level 2	
Part Number	Value (Ohms)	Rating (W)	Characteristic (#)	Tolerance (%)	(FRL)(&)	(FRL)(&)	Manufacturer
RWR81#R129%&	0.129	1	S, W, N, Z	B, D	S	P, R	DAL, SHA, TEP
RWR81#R130%&	0.130	1	S, W, N, Z	B, D, F	S	P, R	DAL, SHA, TEP
RWR81#R132%&	0.132	1	S, W, N, Z	B, D	S	P, R	DAL, SHA, TEP
RWR81#R133%&	0.133	1	S, W, N, Z	B, D, F	S	P, R	DAL, SHA, TEP
RWR81#R135%&	0.135	1	S, W, N, Z	B, D	S	P, R	DAL, SHA, TEP
RWR81#R137%&	0.137	1	S, W, N, Z	B, D, F	S	P, R	DAL, SHA, TEP
RWR81#R138%&	0.138	1	S, W, N, Z	B, D	S	P, R	DAL, SHA, TEP
	Resistance	Power	Terminal	Resistance	Level 1	Level 2	
Part Number	Value (Ohms)	Rating (W)	Characteristic (#)	Tolerance (%)	(FRL)(&)	(FRL)(&)	Manufacturer
RWR81#R140%&	0.140	1	S, W, N, Z	B, D, F	S	P, R	DAL, SHA, TEP
RWR81#R142%&	0.142	1	S, W, N, Z	B, D	S	P, R	DAL, SHA, TEP
RWR81#R143%&	0.143	1	S, W, N, Z	B, D, F	S	P, R	DAL, SHA, TEP
RWR81#R145%&	0.145	1	S, W, N, Z	B, D	S	P, R	DAL, SHA, TEP
RWR81#R147%&	0.147	1	S, W, N, Z	B, D, F	S	P, R	DAL, SHA, TEP
RWR81#R149%&	0.149	1	S, W, N, Z	B, D	S	P, R	DAL, SHA, TEP
RWR81#R150%&	0.150	1	S, W, N, Z	B, D, F	S	P, R	DAL, SHA, TEP
	Resistance	Power	Terminal	Resistance	Level 1	Level 2	
Part Number	Value (Ohms)	Rating (W)	Characteristic (#)	Tolerance (%)	(FRL)(&)	(FRL)(&)	Manufacturer
RWR81#R152%&	0.152	1	S, W, N, Z	B, D	S	P, R	DAL, SHA, TEP
RWR81#R154%&	0.154	1	S, W, N, Z	B, D, F	S	P, R	DAL, SHA, TEP
RWR81#R156%&	0.156	1	S, W, N, Z	B, D	S	P, R	DAL, SHA, TEP
RWR81#R158%&	0.158	1	S, W, N, Z	B, D, F	S	P, R	DAL, SHA, TEP
RWR81#R160%&	0.160	1	S, W, N, Z	B, D	S	P, R	DAL, SHA, TEP
RWR81#R162%&	0.162	1	S, W, N, Z	B, D, F	S	P, R	DAL, SHA, TEP
RWR81#R164%&	0.164	1	S, W, N, Z	B, D	S	P, R	DAL, SHA, TEP
	Resistance	Power	Terminal	Resistance	Level 1	Level 2	
Part Number	Value (Ohms)	Rating (W)	Characteristic (#)	Tolerance (%)	(FRL)(&)	(FRL)(&)	Manufacturer
RWR81#R165%&	0.165	1	S, W, N, Z	B, D, F	S	P, R	DAL, SHA, TEP
RWR81#R167%&	0.167	1	S, W, N, Z	B, D	S	P, R	DAL, SHA, TEP
RWR81#R169%&	0.169	1	S, W, N, Z	B, D, F	S	P, R	DAL, SHA, TEP

RWR81#R172%&	0.172	1	S, W, N, Z	B, D	S	P, R	DAL, SHA, TEP
RWR81#R174%&	0.174	1	S, W, N, Z	B, D, F	S	P, R	DAL, SHA, TEP
RWR81#R176%&	0.176	1	S, W, N, Z	B, D	S	P, R	DAL, SHA, TEP
RWR81#R178%&	0.178	1	S, W, N, Z	B, D, F	S	P, R	DAL, SHA, TEP
	Resistance	Power	Terminal	Resistance	Level 1	Level 2	
Part Number	Value (Ohms)	Rating (W)	Characteristic (#)	Tolerance (%)	(FRL)(&)	(FRL)(&)	Manufacturer
RWR81#R180%&	0.180	1	S, W, N, Z	B, D, F	S	P, R	DAL, SHA, TEP
RWR81#R182%&	0.182	1	S, W, N, Z	B, D, F	S	P, R	DAL, SHA, TEP
RWR81#R184%&	0.184	1	S, W, N, Z	B, D	S	P, R	DAL, SHA, TEP
RWR81#R187%&	0.187	1	S, W, N, Z	B, D, F	S	P, R	DAL, SHA, TEP
RWR81#R189%&	0.189	1	S, W, N, Z	B, D	S	P, R	DAL, SHA, TEP
RWR81#R191%&	0.191	1	S, W, N, Z	B, D, F	S	P, R	DAL, SHA, TEP
RWR81#R193%&	0.193	1	S, W, N, Z	B, D	S	P, R	DAL, SHA, TEP
	Resistance	Power	Terminal	Resistance	Level 1	Level 2	
Part Number	Value (Ohms)	Rating (W)	Characteristic (#)	Tolerance (%)	(FRL)(&)	(FRL)(&)	Manufacturer
RWR81#R196%&	0.196	1	S, W, N, Z	B, D, F	S	P, R	DAL, SHA, TEP
RWR81#R198%&	0.198	1	S, W, N, Z	B, D	S	P, R	DAL, SHA, TEP
RWR81#R200%&	0.200	1	S, W, N, Z	B, D, F	S	P, R	DAL, SHA, TEP
RWR81#R203%&	0.203	1	S, W, N, Z	B, D	S	P, R	DAL, SHA, TEP
RWR81#R205%&	0.205	1	S, W, N, Z	B, D, F	S	P, R	DAL, SHA, TEP
RWR81#R208%&	0.208	1	S, W, N, Z	B, D	S	P, R	DAL, SHA, TEP
RWR81#R210%&	0.210	1	S, W, N, Z	B, D, F	S	P, R	DAL, SHA, TEP
	Resistance	Power	Terminal	Resistance	Level 1	Level 2	
Part Number	Value (Ohms)	Rating (W)	Characteristic (#)	Tolerance (%)	(FRL)(&)	(FRL)(&)	Manufacturer
RWR81#R213%&	0.213	1	S, W, N, Z	B, D	S	P, R	DAL, SHA, TEP
RWR81#R215%&	0.215	1	S, W, N, Z	B, D, F	S	P, R	DAL, SHA, TEP
RWR81#R218%&	0.218	1	S, W, N, Z	B, D	S	P, R	DAL, SHA, TEP
RWR81#R221%&	0.221	1	S, W, N, Z	B, D, F	S	P, R	DAL, SHA, TEP
RWR81#R223%&	0.223	1	S, W, N, Z	B, D	S	P, R	DAL, SHA, TEP
RWR81#R226%&	0.226	1	S, W, N, Z	B, D, F	S	P, R	DAL, SHA, TEP
RWR81#R229%&	0.229	1	S, W, N, Z	B, D	S	P, R	DAL, SHA, TEP
	Resistance	Power	Terminal	Resistance	Level 1	Level 2	
Part Number	Value (Ohms)	Rating (W)	Characteristic (#)	Tolerance (%)	(FRL)(&)	(FRL)(&)	Manufacturer
RWR81#R232%&	0.232	1	S, W, N, Z	B, D, F	S	P, R	DAL, SHA, TEP
RWR81#R234%&	0.234	1	S, W, N, Z	B, D	S	P, R	DAL, SHA, TEP
RWR81#R237%&	0.237	1	S, W, N, Z	B, D, F	S	P, R	DAL, SHA, TEP
RWR81#R240%&	0.240	1	S, W, N, Z	B, D	S	P, R	DAL, SHA, TEP
RWR81#R243%&	0.243	1	S, W, N, Z	B, D, F	S	P, R	DAL, SHA, TEP
RWR81#R246%&	0.246	1	S, W, N, Z	B, D	S	P, R	DAL, SHA, TEP
RWR81#R249%&	0.249	1	S, W, N, Z	B, D, F	S	P, R	DAL, SHA, TEP
	Resistance	Power	Terminal	Resistance	Level 1	Level 2	
Part Number	Value (Ohms)	Rating (W)	Characteristic (#)	Tolerance (%)	(FRL)(&)	(FRL)(&)	Manufacturer
RWR81#R252%&	0.252	1	S, W, N, Z	B, D	S	P, R	DAL, SHA, TEP
RWR81#R255%&	0.255	1	S, W, N, Z	B, D, F	S	P, R	DAL, SHA, TEP
RWR81#R258%&	0.258	1	S, W, N, Z	B, D	S	P, R	DAL, SHA, TEP
RWR81#R261%&	0.261	1	S, W, N, Z	B, D, F	S	P, R	DAL, SHA, TEP
RWR81#R264%&	0.264	1	S, W, N, Z	B, D	S	P, R	DAL, SHA, TEP

RWR81#R267%&	0.267	1	S, W, N, Z	B, D, F	S	P, R	DAL, SHA, TEP
RWR81#R271%&	0.271	1	S, W, N, Z	B, D	S	P, R	DAL, SHA, TEP
	Resistance	Power	Terminal	Resistance	Level 1	Level 2	
Part Number	Value (Ohms)	Rating (W)	Characteristic (#)	Tolerance (%)	(FRL)(&)	(FRL)(&)	Manufacturer
RWR81#R274%&	0.274	1	S, W, N, Z	B, D, F	S	P, R	DAL, SHA, TEP
RWR81#R277%&	0.277	1	S, W, N, Z	B, D	S	P, R	DAL, SHA, TEP
RWR81#R280%&	0.280	1	S, W, N, Z	B, D, F	S	P, R	DAL, SHA, TEP
RWR81#R284%&	0.284	1	S, W, N, Z	B, D	S	P, R	DAL, SHA, TEP
RWR81#R287%&	0.287	1	S, W, N, Z	B, D, F	S	P, R	DAL, SHA, TEP
RWR81#R291%&	0.291	1	S, W, N, Z	B, D	S	P, R	DAL, SHA, TEP
RWR81#R294%&	0.294	1	S, W, N, Z	B, D, F	S	P, R	DAL, SHA, TEP
	Resistance	Power	Terminal	Resistance	Level 1	Level 2	
Part Number	Value (Ohms)	Rating (W)	Characteristic (#)	Tolerance (%)	(FRL)(&)	(FRL)(&)	Manufacturer
RWR81#R298%&	0.298	1	S, W, N, Z	B, D	S	P, R	DAL, SHA, TEP
RWR81#R301%&	0.301	1	S, W, N, Z	B, D, F	S	P, R	DAL, SHA, TEP
RWR81#R305%&	0.305	1	S, W, N, Z	B, D	S	P, R	DAL, SHA, TEP
RWR81#R309%&	0.309	1	S, W, N, Z	B, D, F	S	P, R	DAL, SHA, TEP
RWR81#R312%&	0.312	1	S, W, N, Z	B, D	S	P, R	DAL, SHA, TEP
RWR81#R316%&	0.316	1	S, W, N, Z	B, D, F	S	P, R	DAL, SHA, TEP
RWR81#R320%&	0.320	1	S, W, N, Z	B, D	S	P, R	DAL, SHA, TEP
	Resistance	Power	Terminal	Resistance	Level 1	Level 2	
Part Number	Value (Ohms)	Rating (W)	Characteristic (#)	Tolerance (%)	(FRL)(&)	(FRL)(&)	Manufacturer
RWR81#R324%&	0.324	1	S, W, N, Z	B, D, F	S	P, R	DAL, SHA, TEP
RWR81#R328%&	0.328	1	S, W, N, Z	B, D	S	P, R	DAL, SHA, TEP
RWR81#R332%&	0.332	1	S, W, N, Z	B, D, F	S	P, R	DAL, SHA, TEP
RWR81#R336%&	0.336	1	S, W, N, Z	B, D	S	P, R	DAL, SHA, TEP
RWR81#R340%&	0.340	1	S, W, N, Z	B, D, F	S	P, R	DAL, SHA, TEP
RWR81#R344%&	0.344	1	S, W, N, Z	B, D	S	P, R	DAL, SHA, TEP
RWR81#R348%&	0.348	1	S, W, N, Z	B, D, F	S	P, R	DAL, SHA, TEP
	Resistance	Power	Terminal	Resistance	Level 1	Level 2	
Part Number	Value (Ohms)	Rating (W)	Characteristic (#)	Tolerance (%)	(FRL)(&)	(FRL)(&)	Manufacturer
RWR81#R352%&	0.352	1	S, W, N, Z	B, D	S	P, R	DAL, SHA, TEP
RWR81#R357%&	0.357	1	S, W, N, Z	B, D, F	S	P, R	DAL, SHA, TEP
RWR81#R361%&	0.361	1	S, W, N, Z	B, D	S	P, R	DAL, SHA, TEP
RWR81#R365%&	0.365	1	S, W, N, Z	B, D, F	S	P, R	DAL, SHA, TEP
RWR81#R370%&	0.370	1	S, W, N, Z	B, D	S	P, R	DAL, SHA, TEP
RWR81#R374%&	0.374	1	S, W, N, Z	B, D, F	S	P, R	DAL, SHA, TEP
RWR81#R379%&	0.379	1	S, W, N, Z	B, D	S	P, R	DAL, SHA, TEP
	Resistance	Power	Terminal	Resistance	Level 1	Level 2	
Part Number	Value (Ohms)	Rating (W)	Characteristic (#)	Tolerance (%)	(FRL)(&)	(FRL)(&)	Manufacturer
RWR81#R383%&	0.383	1	S, W, N, Z	B, D, F	S	P, R	DAL, SHA, TEP
RWR81#R388%&	0.388	1	S, W, N, Z	B, D	S	P, R	DAL, SHA, TEP
RWR81#R392%&	0.392	1	S, W, N, Z	B, D, F	S	P, R	DAL, SHA, TEP
RWR81#R397%&	0.397	1	S, W, N, Z	B, D	S	P, R	DAL, SHA, TEP
RWR81#R402%&	0.402	1	S, W, N, Z	B, D, F	S	P, R	DAL, SHA, TEP
RWR81#R407%&	0.407	1	S, W, N, Z	B, D	S	P, R	DAL, SHA, TEP
RWR81#R412%&	0.412	1	S, W, N, Z	B, D, F	S	P, R	DAL, SHA, TEP

	Resistance	Power	Terminal	Resistance	Level 1	Level 2	
Part Number	Value (Ohms)	Rating (W)	Characteristic (#)	Tolerance (%)	(FRL)(&)	(FRL)(&)	Manufacturer
RWR81#R417%&	0.417	1	S, W, N, Z	B, D	S	P, R	DAL, SHA, TEP
RWR81#R422%&	0.422	1	S, W, N, Z	B, D, F	S	P, R	DAL, SHA, TEP
RWR81#R427%&	0.427	1	S, W, N, Z	B, D	S	P, R	DAL, SHA, TEP
RWR81#R432%&	0.432	1	S, W, N, Z	B, D, F	S	P, R	DAL, SHA, TEP
RWR81#R437%&	0.437	1	S, W, N, Z	B, D	S	P, R	DAL, SHA, TEP
RWR81#R442%&	0.442	1	S, W, N, Z	B, D, F	S	P, R	DAL, SHA, TEP
RWR81#R448%&	0.448	1	S, W, N, Z	B, D	S	P, R	DAL, SHA, TEP
	Resistance	Power	Terminal	Resistance	Level 1	Level 2	
Part Number	Value (Ohms)	Rating (W)	Characteristic (#)	Tolerance (%)	(FRL)(&)	(FRL)(&)	Manufacturer
RWR81#R453%&	0.453	1	S, W, N, Z	B, D, F	S	P, R	DAL, SHA, TEP
RWR81#R459%&	0.459	1	S, W, N, Z	B, D	S	P, R	DAL, SHA, TEP
RWR81#R464%&	0.464	1	S, W, N, Z	B, D, F	S	P, R	DAL, SHA, TEP
RWR81#R470%&	0.470	1	S, W, N, Z	B, D	S	P, R	DAL, SHA, TEP
RWR81#R475%&	0.475	1	S, W, N, Z	B, D, F	S	P, R	DAL, SHA, TEP
RWR81#R481#&	0.481	1	S, W, N, Z	B, D	S	P, R	DAL, SHA, TEP
RWR81#R487%&	0.487	1	S, W, N, Z	B, D, F	S	P, R	DAL, SHA, TEP
	Resistance	Power	Terminal	Resistance	Level 1	Level 2	
Part Number	Value (Ohms)	Rating (W)	Characteristic (#)	Tolerance (%)	(FRL)(&)	(FRL)(&)	Manufacturer
RWR81#R493%&	0.493	1	S, W, N, Z	B, D	S	P, R	DAL, SHA, TEP
RWR81#R499%&	0.499	1	S, W, N, Z	B, D, F	S	P, R	DAL, SHA, TEP
RWR81#R505%&	0.505	1	S, W, N, Z	B, D	S	P, R	DAL, SHA, TEP
RWR81#R511%&	0.511	1	S, W, N, Z	B, D, F	S	P, R	DAL, SHA, TEP
RWR81#R517%&	0.517	1	S, W, N, Z	B, D	S	P, R	DAL, SHA, TEP
RWR81#R523%&	0.523	1	S, W, N, Z	B, D, F	S	P, R	DAL, SHA, TEP
RWR81#R530%&	0.530	1	S, W, N, Z	B, D	S	P, R	DAL, SHA, TEP
	Resistance	Power	Terminal	Resistance	Level 1	Level 2	
Part Number	Value (Ohms)	Rating (W)	Characteristic (#)	Tolerance (%)	(FRL)(&)	(FRL)(&)	Manufacturer
RWR81#R536%&	0.536	1	S, W, N, Z	B, D, F	S	P, R	DAL, SHA, TEP
RWR81#R542%&	0.542	1	S, W, N, Z	B, D	S	P, R	DAL, SHA, TEP
RWR81#R549%&	0.549	1	S, W, N, Z	B, D, F	S	P, R	DAL, SHA, TEP
RWR81#R556%&	0.556	1	S, W, N, Z	B, D	S	P, R	DAL, SHA, TEP
RWR81#R562%&	0.562	1	S, W, N, Z	B, D, F	S	P, R	DAL, SHA, TEP
RWR81#R569%&	0.569	1	S, W, N, Z	B, D	S	P, R	DAL, SHA, TEP
RWR81#R576%&	0.576	1	S, W, N, Z	B, D, F	S	P, R	DAL, SHA, TEP
	Resistance	Power	Terminal	Resistance	Level 1	Level 2	
Part Number	Value (Ohms)	Rating (W)	Characteristic (#)	Tolerance (%)	(FRL)(&)	(FRL)(&)	Manufacturer
RWR81#R583%&	0.583	1	S, W, N, Z	B, D	S	P, R	DAL, SHA, TEP
RWR81#R590%&	0.590	1	S, W, N, Z	B, D, F	S	P, R	DAL, SHA, TEP
RWR81#R597%&	0.597	1	S, W, N, Z	B, D	S	P, R	DAL, SHA, TEP
RWR81#R604%&	0.604	1	S, W, N, Z	B, D, F	S	P, R	DAL, SHA, TEP
RWR81#R612%&	0.612	1	S, W, N, Z	B, D	S	P, R	DAL, SHA, TEP
RWR81#R619%&	0.619	1	S, W, N, Z	B, D, F	S	P, R	DAL, SHA, TEP
RWR81#R626%&	0.626	1	S, W, N, Z	B, D	S	P, R	DAL, SHA, TEP
	Resistance	Power	Terminal	Resistance	Level 1	Level 2	
Part Number	Value (Ohms)	Rating (W)	Characteristic (#)	Tolerance (%)	(FRL)(&)	(FRL)(&)	Manufacturer

RWR81#R634%&	0.634	1	S, W, N, Z	B, D, F	S	P, R	DAL, SHA, TEP
RWR81#R642%&	0.642	1	S, W, N, Z	B, D	S	P, R	DAL, SHA, TEP
RWR81#R649%&	0.649	1	S, W, N, Z	B, D, F	S	P, R	DAL, SHA, TEP
RWR81#R657%&	0.657	1	S, W, N, Z	B, D	S	P, R	DAL, SHA, TEP
RWR81#R665%&	0.665	1	S, W, N, Z	B, D, F	S	P, R	DAL, SHA, TEP
RWR81#R673%&	0.673	1	S, W, N, Z	B, D	S	P, R	DAL, SHA, TEP
RWR81#R681#&	0.681	1	S, W, N, Z	B, D, F	S	P, R	DAL, SHA, TEP
	Resistance	Power	Terminal	Resistance	Level 1	Level 2	
Part Number	Value (Ohms)	Rating (W)	Characteristic (#)	Tolerance (%)	(FRL)(&)	(FRL)(&)	Manufacturer
RWR81#R690%&	0.690	1	S, W, N, Z	B, D	S	P, R	DAL, SHA, TEP
RWR81#R698%&	0.698	1	S, W, N, Z	B, D, F	S	P, R	DAL, SHA, TEP
RWR81#R706%&	0.706	1	S, W, N, Z	B, D	S	P, R	DAL, SHA, TEP
RWR81#R715%&	0.715	1	S, W, N, Z	B, D, F	S	P, R	DAL, SHA, TEP
RWR81#R723%&	0.723	1	S, W, N, Z	B, D	S	P, R	DAL, SHA, TEP
RWR81#R732%&	0.732	1	S, W, N, Z	B, D, F	S	P, R	DAL, SHA, TEP
RWR81#R741%&	0.741	1	S, W, N, Z	B, D	S	P, R	DAL, SHA, TEP
	Resistance	Power	Terminal	Resistance	Level 1	Level 2	
Part Number	Value (Ohms)	Rating (W)	Characteristic (#)	Tolerance (%)	(FRL)(&)	(FRL)(&)	Manufacturer
RWR81#R750%&	0.750	1	S, W, N, Z	B, D, F	S	P, R	DAL, SHA, TEP
RWR81#R759%&	0.759	1	S, W, N, Z	B, D	S	P, R	DAL, SHA, TEP
RWR81#R768%&	0.768	1	S, W, N, Z	B, D, F	S	P, R	DAL, SHA, TEP
RWR81#R776%&	0.776	1	S, W, N, Z	B, D	S	P, R	DAL, SHA, TEP
RWR81#R787%&	0.787	1	S, W, N, Z	B, D, F	S	P, R	DAL, SHA, TEP
RWR81#R796%&	0.796	1	S, W, N, Z	B, D	S	P, R	DAL, SHA, TEP
RWR81#R806%&	0.806	1	S, W, N, Z	B, D, F	S	P, R	DAL, SHA, TEP
	Resistance	Power	Terminal	Resistance	Level 1	Level 2	
Part Number	Value (Ohms)	Rating (W)	Characteristic (#)	Tolerance (%)	(FRL)(&)	(FRL)(&)	Manufacturer
RWR81#R816%&	0.816	1	S, W, N, Z	B, D	S	P, R	DAL, SHA, TEP
RWR81#R825%&	0.825	1	S, W, N, Z	B, D, F	S	P, R	DAL, SHA, TEP
RWR81#R835%&	0.835	1	S, W, N, Z	B, D	S	P, R	DAL, SHA, TEP
RWR81#R845%&	0.845	1	S, W, N, Z	B, D, F	S	P, R	DAL, SHA, TEP
RWR81#R856%&	0.856	1	S, W, N, Z	B, D	S	P, R	DAL, SHA, TEP
RWR81#R866%&	0.866	1	S, W, N, Z	B, D, F	S	P, R	DAL, SHA, TEP
RWR81#R876%&	0.876	1	S, W, N, Z	B, D	S	P, R	DAL, SHA, TEP
	Resistance	Power	Terminal	Resistance	Level 1	Level 2	
Part Number	Value (Ohms)	Rating (W)	Characteristic (#)	Tolerance (%)	(FRL)(&)	(FRL)(&)	Manufacturer
RWR81#R887%&	0.887	1	S, W, N, Z	B, D, F	S	P, R	DAL, SHA, TEP
RWR81#R898%&	0.898	1	S, W, N, Z	B, D	S	P, R	DAL, SHA, TEP
RWR81#R909%&	0.909	1	S, W, N, Z	B, D, F	S	P, R	DAL, SHA, TEP
RWR81#R920%&	0.920	1	S, W, N, Z	B, D	S	P, R	DAL, SHA, TEP
RWR81#R931%&	0.931	1	S, W, N, Z	B, D, F	S	P, R	DAL, SHA, TEP
RWR81#R942%&	0.942	1	S, W, N, Z	B, D	S	P, R	DAL, SHA, TEP
RWR81#R953%&	0.953	1	S, W, N, Z	B, D, F	S	P, R	DAL, SHA, TEP
	Resistance	Power	Terminal	Resistance	Level 1	Level 2	
Part Number	Value (Ohms)	Rating (W)	Characteristic (#)	Tolerance (%)	(FRL)(&)	(FRL)(&)	Manufacturer
RWR81#R965%&	0.965	1	S, W, N, Z	B, D	S	P, R	DAL, SHA, TEP
RWR81#R976%&	0.976	1	S, W, N, Z	B, D, F	S	P, R	DAL, SHA, TEP

RWR81#R988%&	0.988	1	S, W, N, Z	B, D	S	P, R	DAL, SHA, TEP

RWR81 Wirewound Resistors: 1.00 Ohms through 9.88 Ohms

	Resistance	Power	Terminal	Resistance	Level 1	Level 2	
Part Number	Value (Ohms)	Rating (W)	Characteristic (#)	Tolerance (%)	(FRL)(&)	(FRL)(&)	Manufacturer
RWR81#1R00%&	1.00	1	S, W, N, Z	B, D, F	S	P, R	DAL, SHA, TEP
RWR81#1R01%&	1.01	1	S, W, N, Z	B, D	S	P, R	DAL, SHA, TEP
RWR81#1R02%&	1.02	1	S, W, N, Z	B, D, F	S	P, R	DAL, SHA, TEP
RWR81#1R04%&	1.04	1	S, W, N, Z	B, D	S	P, R	DAL, SHA, TEP
RWR81#1R05%&	1.05	1	S, W, N, Z	B, D, F	S	P, R	DAL, SHA, TEP
RWR81#1R06%&	1.06	1	S, W, N, Z	B, D	S	P, R	DAL, SHA, TEP
RWR81#1R07%&	1.07	1	S, W, N, Z	B, D, F	S	P, R	DAL, SHA, TEP
	Resistance	Power	Terminal	Resistance	Level 1	Level 2	
Part Number	Value (Ohms)	Rating (W)	Characteristic (#)	Tolerance (%)	(FRL)(&)	(FRL)(&)	Manufacturer
RWR81#1R09%&	1.09	1	S, W, N, Z	B, D	S	P, R	DAL, SHA, TEP
RWR81#1R10%&	1.10	1	S, W, N, Z	B, D, F	S	P, R	DAL, SHA, TEP
RWR81#1R11%&	1.11	1	S, W, N, Z	B, D	S	P, R	DAL, SHA, TEP
RWR81#1R13%&	1.13	1	S, W, N, Z	B, D, F	S	P, R	DAL, SHA, TEP
RWR81#1R14%&	1.14	1	S, W, N, Z	B, D	S	P, R	DAL, SHA, TEP
RWR81#1R15%&	1.15	1	S, W, N, Z	B, D, F	S	P, R	DAL, SHA, TEP
RWR81#1R17%&	1.17	1	S, W, N, Z	B, D	S	P, R	DAL, SHA, TEP
	Resistance	Power	Terminal	Resistance	Level 1	Level 2	
Part Number	Value (Ohms)	Rating (W)	Characteristic (#)	Tolerance (%)	(FRL)(&)	(FRL)(&)	Manufacturer
RWR81#1R18%&	1.18	1	S, W, N, Z	B, D, F	S	P, R	DAL, SHA, TEP
RWR81#1R20%&	1.20	1	S, W, N, Z	B, D	S	P, R	DAL, SHA, TEP
RWR81#1R21%&	1.21	1	S, W, N, Z	B, D, F	S	P, R	DAL, SHA, TEP
RWR81#1R23%&	1.23	1	S, W, N, Z	B, D	S	P, R	DAL, SHA, TEP
RWR81#1R24%&	1.24	1	S, W, N, Z	B, D, F	S	P, R	DAL, SHA, TEP
RWR81#1R26%&	1.26	1	S, W, N, Z	B, D	S	P, R	DAL, SHA, TEP
RWR81#1R27%&	1.27	1	S, W, N, Z	B, D, F	S	P, R	DAL, SHA, TEP
	Resistance	Power	Terminal	Resistance	Level 1	Level 2	
Part Number	Value (Ohms)	Rating (W)	Characteristic (#)	Tolerance (%)	(FRL)(&)	(FRL)(&)	Manufacturer
RWR81#1R29%&	1.29	1	S, W, N, Z	B, D	S	P, R	DAL, SHA, TEP
RWR81#1R30%&	1.30	1	S, W, N, Z	B, D, F	S	P, R	DAL, SHA, TEP
RWR81#1R32%&	1.32	1	S, W, N, Z	B, D	S	P, R	DAL, SHA, TEP
RWR81#1R33%&	1.33	1	S, W, N, Z	B, D, F	S	P, R	DAL, SHA, TEP
RWR81#1R35%&	1.35	1	S, W, N, Z	B, D	S	P, R	DAL, SHA, TEP
RWR81#1R37%&	1.37	1	S, W, N, Z	B, D, F	S	P, R	DAL, SHA, TEP
RWR81#1R38%&	1.38	1	S, W, N, Z	B, D	S	P, R	DAL, SHA, TEP
	Resistance	Power	Terminal	Resistance	Level 1	Level 2	
Part Number	Value (Ohms)	Rating (W)	Characteristic (#)	Tolerance (%)	(FRL)(&)	(FRL)(&)	Manufacturer
RWR81#1R40%&	1.40	1	S, W, N, Z	B, D, F	S	P, R	DAL, SHA, TEP
RWR81#1R42%&	1.42	1	S, W, N, Z	B, D	S	P, R	DAL, SHA, TEP
RWR81#1R43%&	1.43	1	S, W, N, Z	B, D, F	S	P, R	DAL, SHA, TEP

RWR81#1R45%&	1.45	1	S, W, N, Z	B, D	S	P, R	DAL, SHA, TEP
RWR81#1R47%&	1.47	1	S, W, N, Z	B, D, F	S	P, R	DAL, SHA, TEP
RWR81#1R49%&	1.49	1	S, W, N, Z	B, D	S	P, R	DAL, SHA, TEP
RWR81#1R50%&	1.50	1	S, W, N, Z	B, D, F	S	P, R	DAL, SHA, TEP
	Resistance	Power	Terminal	Resistance	Level 1	Level 2	
Part Number	Value (Ohms)	Rating (W)	Characteristic (#)	Tolerance (%)	(FRL)(&)	(FRL)(&)	Manufacturer
RWR81#1R52%&	1.52	1	S, W, N, Z	B, D	S	P, R	DAL, SHA, TEP
RWR81#1R54%&	1.54	1	S, W, N, Z	B, D, F	S	P, R	DAL, SHA, TEP
RWR81#1R56%&	1.56	1	S, W, N, Z	B, D	S	P, R	DAL, SHA, TEP
RWR81#1R58%&	1.58	1	S, W, N, Z	B, D, F	S	P, R	DAL, SHA, TEP
RWR81#1R60%&	1.60	1	S, W, N, Z	B, D	S	P, R	DAL, SHA, TEP
RWR81#1R62%&	1.62	1	S, W, N, Z	B, D, F	S	P, R	DAL, SHA, TEP
RWR81#1R64%&	1.64	1	S, W, N, Z	B, D	S	P, R	DAL, SHA, TEP
	Resistance	Power	Terminal	Resistance	Level 1	Level 2	
Part Number	Value (Ohms)	Rating (W)	Characteristic (#)	Tolerance (%)	(FRL)(&)	(FRL)(&)	Manufacturer
RWR81#1R65%&	1.65	1	S, W, N, Z	B, D, F	S	P, R	DAL, SHA, TEP
RWR81#1R67%&	1.67	1	S, W, N, Z	B, D	S	P, R	DAL, SHA, TEP
RWR81#1R69%&	1.69	1	S, W, N, Z	B, D, F	S	P, R	DAL, SHA, TEP
RWR81#1R72%&	1.72	1	S, W, N, Z	B, D	S	P, R	DAL, SHA, TEP
RWR81#1R74%&	1.74	1	S, W, N, Z	B, D, F	S	P, R	DAL, SHA, TEP
RWR81#1R76%&	1.76	1	S, W, N, Z	B, D	S	P, R	DAL, SHA, TEP
RWR81#1R78%&	1.78	1	S, W, N, Z	B, D, F	S	P, R	DAL, SHA, TEP
	Resistance	Power	Terminal	Resistance	Level 1	Level 2	
Part Number	Value (Ohms)	Rating (W)	Characteristic (#)	Tolerance (%)	(FRL)(&)	(FRL)(&)	Manufacturer
RWR81#1R80%&	1.80	1	S, W, N, Z	B, D, F	S	P, R	DAL, SHA, TEP
RWR81#1R82%&	1.82	1	S, W, N, Z	B, D, F	S	P, R	DAL, SHA, TEP
RWR81#1R84%&	1.84	1	S, W, N, Z	B, D	S	P, R	DAL, SHA, TEP
RWR81#1R87%&	1.87	1	S, W, N, Z	B, D, F	S	P, R	DAL, SHA, TEP
RWR81#1R89%&	1.89	1	S, W, N, Z	B, D	S	P, R	DAL, SHA, TEP
RWR81#1R91%&	1.91	1	S, W, N, Z	B, D, F	S	P, R	DAL, SHA, TEP
RWR81#1R93%&	1.93	1	S, W, N, Z	B, D	S	P, R	DAL, SHA, TEP
	Resistance	Power	Terminal	Resistance	Level 1	Level 2	
Part Number	Value (Ohms)	Rating (W)	Characteristic (#)	Tolerance (%)	(FRL)(&)	(FRL)(&)	Manufacturer
RWR81#1R96%&	1.96	1	S, W, N, Z	B, D, F	S	P, R	DAL, SHA, TEP
RWR81#1R98%&	1.98	1	S, W, N, Z	B, D	S	P, R	DAL, SHA, TEP
RWR81#2R00%&	2.00	1	S, W, N, Z	B, D, F	S	P, R	DAL, SHA, TEP
RWR81#2R03%&	2.03	1	S, W, N, Z	B, D	S	P, R	DAL, SHA, TEP
RWR81#2R05%&	2.05	1	S, W, N, Z	B, D, F	S	P, R	DAL, SHA, TEP
RWR81#2R08%&	2.08	1	S, W, N, Z	B, D	S	P, R	DAL, SHA, TEP
RWR81#2R10%&	2.10	1	S, W, N, Z	B, D, F	S	P, R	DAL, SHA, TEP
	Resistance	Power	Terminal	Resistance	Level 1	Level 2	
Part Number	Value (Ohms)	Rating (W)	Characteristic (#)	Tolerance (%)	(FRL)(&)	(FRL)(&)	Manufacturer
RWR81#2R13%&	2.13	1	S, W, N, Z	B, D	S	P, R	DAL, SHA, TEP
RWR81#2R15%&	2.15	1	S, W, N, Z	B, D, F	S	P, R	DAL, SHA, TEP
RWR81#2R18%&	2.18	1	S, W, N, Z	B, D	S	P, R	DAL, SHA, TEP
RWR81#2R21%&	2.21	1	S, W, N, Z	B, D, F	S	P, R	DAL, SHA, TEP
RWR81#2R23%&	2.23	1	S, W, N, Z	B, D	S	P, R	DAL, SHA, TEP

RWR81#2R26%&	2.26	1	S, W, N, Z	B, D, F	S	P, R	DAL, SHA, TEP
RWR81#2R29%&	2.29	1	S, W, N, Z	B, D	S	P, R	DAL, SHA, TEP
	Resistance	Power	Terminal	Resistance	Level 1	Level 2	
Part Number	Value (Ohms)	Rating (W)	Characteristic (#)	Tolerance (%)	(FRL)(&)	(FRL)(&)	Manufacturer
RWR81#2R32%&	2.32	1	S, W, N, Z	B, D, F	S	P, R	DAL, SHA, TEP
RWR81#2R34%&	2.34	1	S, W, N, Z	B, D	S	P, R	DAL, SHA, TEP
RWR81#2R37%&	2.37	1	S, W, N, Z	B, D, F	S	P, R	DAL, SHA, TEP
RWR81#2R40%&	2.40	1	S, W, N, Z	B, D	S	P, R	DAL, SHA, TEP
RWR81#2R43%&	2.43	1	S, W, N, Z	B, D, F	S	P, R	DAL, SHA, TEP
RWR81#2R46%&	2.46	1	S, W, N, Z	B, D	S	P, R	DAL, SHA, TEP
RWR81#2R49%&	2.49	1	S, W, N, Z	B, D, F	S	P, R	DAL, SHA, TEP
	Resistance	Power	Terminal	Resistance	Level 1	Level 2	
Part Number	Value (Ohms)	Rating (W)	Characteristic (#)	Tolerance (%)	(FRL)(&)	(FRL)(&)	Manufacturer
RWR81#2R52%&	2.52	1	S, W, N, Z	B, D	S	P, R	DAL, SHA, TEP
RWR81#2R55%&	2.55	1	S, W, N, Z	B, D, F	S	P, R	DAL, SHA, TEP
RWR81#2R58%&	2.58	1	S, W, N, Z	B, D	S	P, R	DAL, SHA, TEP
RWR81#2R61%&	2.61	1	S, W, N, Z	B, D, F	S	P, R	DAL, SHA, TEP
RWR81#2R64%&	2.64	1	S, W, N, Z	B, D	S	P, R	DAL, SHA, TEP
RWR81#2R67%&	2.67	1	S, W, N, Z	B, D, F	S	P, R	DAL, SHA, TEP
RWR81#2R71%&	2.71	1	S, W, N, Z	B, D	S	P, R	DAL, SHA, TEP
	Resistance	Power	Terminal	Resistance	Level 1	Level 2	
Part Number	Value (Ohms)	Rating (W)	Characteristic (#)	Tolerance (%)	(FRL)(&)	(FRL)(&)	Manufacturer
RWR81#2R74%&	2.74	1	S, W, N, Z	B, D, F	S	P, R	DAL, SHA, TEP
RWR81#2R77%&	2.77	1	S, W, N, Z	B, D	S	P, R	DAL, SHA, TEP
RWR81#2R80%&	2.80	1	S, W, N, Z	B, D, F	S	P, R	DAL, SHA, TEP
RWR81#2R84%&	2.84	1	S, W, N, Z	B, D	S	P, R	DAL, SHA, TEP
RWR81#2R87%&	2.87	1	S, W, N, Z	B, D, F	S	P, R	DAL, SHA, TEP
RWR81#2R91%&	2.91	1	S, W, N, Z	B, D	S	P, R	DAL, SHA, TEP
RWR81#2R94%&	2.94	1	S, W, N, Z	B, D, F	S	P, R	DAL, SHA, TEP
	Resistance	Power	Terminal	Resistance	Level 1	Level 2	
Part Number	Value (Ohms)	Rating (W)	Characteristic (#)	Tolerance (%)	(FRL)(&)	(FRL)(&)	Manufacturer
RWR81#2R98%&	2.98	1	S, W, N, Z	B, D	S	P, R	DAL, SHA, TEP
RWR81#3R01%&	3.01	1	S, W, N, Z	B, D, F	S	P, R	DAL, SHA, TEP
RWR81#3R05%&	3.05	1	S, W, N, Z	B, D	S	P, R	DAL, SHA, TEP
RWR81#3R09%&	3.09	1	S, W, N, Z	B, D, F	S	P, R	DAL, SHA, TEP
RWR81#3R12%&	3.12	1	S, W, N, Z	B, D	S	P, R	DAL, SHA, TEP
RWR81#3R16%&	3.16	1	S, W, N, Z	B, D, F	S	P, R	DAL, SHA, TEP
RWR81#3R20%&	3.20	1	S, W, N, Z	B, D	S	P, R	DAL, SHA, TEP
	Resistance	Power	Terminal	Resistance	Level 1	Level 2	
Part Number	Value (Ohms)	Rating (W)	Characteristic (#)	Tolerance (%)	(FRL)(&)	(FRL)(&)	Manufacturer
RWR81#3R24%&	3.24	1	S, W, N, Z	B, D, F	S	P, R	DAL, SHA, TEP
RWR81#3R28%&	3.28	1	S, W, N, Z	B, D	S	P, R	DAL, SHA, TEP
RWR81#3R32%&	3.32	1	S, W, N, Z	B, D, F	S	P, R	DAL, SHA, TEP
RWR81#3R36%&	3.36	1	S, W, N, Z	B, D	S	P, R	DAL, SHA, TEP
RWR81#3R40%&	3.40	1	S, W, N, Z	B, D, F	S	P, R	DAL, SHA, TEP
RWR81#3R44%&	3.44	1	S, W, N, Z	B, D	S	P, R	DAL, SHA, TEP
RWR81#3R48%&	3.48	1	S, W, N, Z	B, D, F	S	P, R	DAL, SHA, TEP

	Resistance	Power	Terminal	Resistance	Level 1	Level 2	
Part Number	Value (Ohms)	Rating (W)	Characteristic (#)	Tolerance (%)	(FRL)(&)	(FRL)(&)	Manufacturer
RWR81#3R52%&	3.52	1	S, W, N, Z	B, D	S	P, R	DAL, SHA, TEP
RWR81#3R57%&	3.57	1	S, W, N, Z	B, D, F	S	P, R	DAL, SHA, TEP
RWR81#3R61%&	3.61	1	S, W, N, Z	B, D	S	P, R	DAL, SHA, TEP
RWR81#3R65%&	3.65	1	S, W, N, Z	B, D, F	S	P, R	DAL, SHA, TEP
RWR81#3R70%&	3.70	1	S, W, N, Z	B, D	S	P, R	DAL, SHA, TEP
RWR81#3R74%&	3.74	1	S, W, N, Z	B, D, F	S	P, R	DAL, SHA, TEP
RWR81#3R79%&	3.79	1	S, W, N, Z	B, D	S	P, R	DAL, SHA, TEP
	Resistance	Power	Terminal	Resistance	Level 1	Level 2	
Part Number	Value (Ohms)	Rating (W)	Characteristic (#)	Tolerance (%)	(FRL)(&)	(FRL)(&)	Manufacturer
RWR81#3R83%&	3.83	1	S, W, N, Z	B, D, F	S	P, R	DAL, SHA, TEP
RWR81#3R88%&	3.88	1	S, W, N, Z	B, D	S	P, R	DAL, SHA, TEP
RWR81#3R92%&	3.92	1	S, W, N, Z	B, D, F	S	P, R	DAL, SHA, TEP
RWR81#3R97%&	3.97	1	S, W, N, Z	B, D	S	P, R	DAL, SHA, TEP
RWR81#4R02%&	4.02	1	S, W, N, Z	B, D, F	S	P, R	DAL, SHA, TEP
RWR81#4R07%&	4.07	1	S, W, N, Z	B, D	S	P, R	DAL, SHA, TEP
RWR81#4R12%&	4.12	1	S, W, N, Z	B, D, F	S	P, R	DAL, SHA, TEP
	Resistance	Power	Terminal	Resistance	Level 1	Level 2	
Part Number	Value (Ohms)	Rating (W)	Characteristic (#)	Tolerance (%)	(FRL)(&)	(FRL)(&)	Manufacturer
RWR81#4R17%&	4.17	1	S, W, N, Z	B, D	S	P, R	DAL, SHA, TEP
RWR81#4R22%&	4.22	1	S, W, N, Z	B, D, F	S	P, R	DAL, SHA, TEP
RWR81#4R27%&	4.27	1	S, W, N, Z	B, D	S	P, R	DAL, SHA, TEP
RWR81#4R32%&	4.32	1	S, W, N, Z	B, D, F	S	P, R	DAL, SHA, TEP
RWR81#4R37%&	4.37	1	S, W, N, Z	B, D	S	P, R	DAL, SHA, TEP
RWR81#4R42%&	4.42	1	S, W, N, Z	B, D, F	S	P, R	DAL, SHA, TEP
RWR81#4R48%&	4.48	1	S, W, N, Z	B, D	S	P, R	DAL, SHA, TEP
	Resistance	Power	Terminal	Resistance	Level 1	Level 2	
Part Number	Value (Ohms)	Rating (W)	Characteristic (#)	Tolerance (%)	(FRL)(&)	(FRL)(&)	Manufacturer
RWR81#4R53%&	4.53	1	S, W, N, Z	B, D, F	S	P, R	DAL, SHA, TEP
RWR81#4R59%&	4.59	1	S, W, N, Z	B, D	S	P, R	DAL, SHA, TEP
RWR81#4R64%&	4.64	1	S, W, N, Z	B, D, F	S	P, R	DAL, SHA, TEP
RWR81#4R70%&	4.70	1	S, W, N, Z	B, D	S	P, R	DAL, SHA, TEP
RWR81#4R75%&	4.75	1	S, W, N, Z	B, D, F	S	P, R	DAL, SHA, TEP
RWR81#4R81#&	4.81	1	S, W, N, Z	B, D	S	P, R	DAL, SHA, TEP
RWR81#4R87%&	4.87	1	S, W, N, Z	B, D, F	S	P, R	DAL, SHA, TEP
	Resistance	Power	Terminal	Resistance	Level 1	Level 2	
Part Number	Value (Ohms)	Rating (W)	Characteristic (#)	Tolerance (%)	(FRL)(&)	(FRL)(&)	Manufacturer
RWR81#4R93%&	4.93	1	S, W, N, Z	B, D	S	P, R	DAL, SHA, TEP
RWR81#4R99%&	4.99	1	S, W, N, Z	B, D, F	S	P, R	DAL, SHA, TEP
RWR81#5R05%&	5.05	1	S, W, N, Z	B, D	S	P, R	DAL, SHA, TEP
RWR81#5R11%&	5.11	1	S, W, N, Z	B, D, F	S	P, R	DAL, SHA, TEP
RWR81#5R17%&	5.17	1	S, W, N, Z	B, D	S	P, R	DAL, SHA, TEP
RWR81#5R23%&	5.23	1	S, W, N, Z	B, D, F	S	P, R	DAL, SHA, TEP
RWR81#5R30%&	5.30	1	S, W, N, Z	B, D	S	P, R	DAL, SHA, TEP
	Resistance	Power	Terminal	Resistance	Level 1	Level 2	
Part Number	Value (Ohms)	Rating (W)	Characteristic (#)	Tolerance (%)	(FRL)(&)	(FRL)(&)	Manufacturer

RWR81#5R36%&	5.36	1	S, W, N, Z	B, D, F	S	P, R	DAL, SHA, TEP
RWR81#5R42%&	5.42	1	S, W, N, Z	B, D	S	P, R	DAL, SHA, TEP
RWR81#5R49%&	5.49	1	S, W, N, Z	B, D, F	S	P, R	DAL, SHA, TEP
RWR81#5R56%&	5.56	1	S, W, N, Z	B, D	S	P, R	DAL, SHA, TEP
RWR81#5R62%&	5.62	1	S, W, N, Z	B, D, F	S	P, R	DAL, SHA, TEP
RWR81#5R69%&	5.69	1	S, W, N, Z	B, D	S	P, R	DAL, SHA, TEP
RWR81#5R76%&	5.76	1	S, W, N, Z	B, D, F	S	P, R	DAL, SHA, TEP
	Resistance	Power	Terminal	Resistance	Level 1	Level 2	
Part Number	Value (Ohms)	Rating (W)	Characteristic (#)	Tolerance (%)	(FRL)(&)	(FRL)(&)	Manufacturer
RWR81#5R83%&	5.83	1	S, W, N, Z	B, D	S	P, R	DAL, SHA, TEP
RWR81#5R90%&	5.90	1	S, W, N, Z	B, D, F	S	P, R	DAL, SHA, TEP
RWR81#5R97%&	5.97	1	S, W, N, Z	B, D	S	P, R	DAL, SHA, TEP
RWR81#6R04%&	6.04	1	S, W, N, Z	B, D, F	S	P, R	DAL, SHA, TEP
RWR81#6R12%&	6.12	1	S, W, N, Z	B, D	S	P, R	DAL, SHA, TEP
RWR81#6R19%&	6.19	1	S, W, N, Z	B, D, F	S	P, R	DAL, SHA, TEP
RWR81#6R26%&	6.26	1	S, W, N, Z	B, D	S	P, R	DAL, SHA, TEP
	Resistance	Power	Terminal	Resistance	Level 1	Level 2	
Part Number	Value (Ohms)	Rating (W)	Characteristic (#)	Tolerance (%)	(FRL)(&)	(FRL)(&)	Manufacturer
RWR81#6R34%&	6.34	1	S, W, N, Z	B, D, F	S	P, R	DAL, SHA, TEP
RWR81#6R42%&	6.42	1	S, W, N, Z	B, D	S	P, R	DAL, SHA, TEP
RWR81#6R49%&	6.49	1	S, W, N, Z	B, D, F	S	P, R	DAL, SHA, TEP
RWR81#6R57%&	6.57	1	S, W, N, Z	B, D	S	P, R	DAL, SHA, TEP
RWR81#6R65%&	6.65	1	S, W, N, Z	B, D, F	S	P, R	DAL, SHA, TEP
RWR81#6R73%&	6.73	1	S, W, N, Z	B, D	S	P, R	DAL, SHA, TEP
RWR81#6R81#&	6.81	1	S, W, N, Z	B, D, F	S	P, R	DAL, SHA, TEP
	Resistance	Power	Terminal	Resistance	Level 1	Level 2	
Part Number	Value (Ohms)	Rating (W)	Characteristic (#)	Tolerance (%)	(FRL)(&)	(FRL)(&)	Manufacturer
RWR81#6R90%&	6.90	1	S, W, N, Z	B, D	S	P, R	DAL, SHA, TEP
RWR81#6R98%&	6.98	1	S, W, N, Z	B, D, F	S	P, R	DAL, SHA, TEP
RWR81#7R06%&	7.06	1	S, W, N, Z	B, D	S	P, R	DAL, SHA, TEP
RWR81#7R15%&	7.15	1	S, W, N, Z	B, D, F	S	P, R	DAL, SHA, TEP
RWR81#7R23%&	7.23	1	S, W, N, Z	B, D	S	P, R	DAL, SHA, TEP
RWR81#7R32%&	7.32	1	S, W, N, Z	B, D, F	S	P, R	DAL, SHA, TEP
RWR81#7R41%&	7.41	1	S, W, N, Z	B, D	S	P, R	DAL, SHA, TEP
	Resistance	Power	Terminal	Resistance	Level 1	Level 2	
Part Number	Value (Ohms)	Rating (W)	Characteristic (#)	Tolerance (%)	(FRL)(&)	(FRL)(&)	Manufacturer
RWR81#7R50%&	7.50	1	S, W, N, Z	B, D, F	S	P, R	DAL, SHA, TEP
RWR81#7R59%&	7.59	1	S, W, N, Z	B, D	S	P, R	DAL, SHA, TEP
RWR81#7R68%&	7.68	1	S, W, N, Z	B, D, F	S	P, R	DAL, SHA, TEP
RWR81#7R77%&	7.77	1	S, W, N, Z	B, D	S	P, R	DAL, SHA, TEP
RWR81#7R87%&	7.87	1	S, W, N, Z	B, D, F	S	P, R	DAL, SHA, TEP
RWR81#7R96%&	7.96	1	S, W, N, Z	B, D	S	P, R	DAL, SHA, TEP
RWR81#8R06%&	8.06	1	S, W, N, Z	B, D, F	S	P, R	DAL, SHA, TEP
	Resistance	Power	Terminal	Resistance	Level 1	Level 2	
Part Number	Value (Ohms)	Rating (W)	Characteristic (#)	Tolerance (%)	(FRL)(&)	(FRL)(&)	Manufacturer
RWR81#8R16%&	8.16	1	S, W, N, Z	B, D	S	P, R	DAL, SHA, TEP
RWR81#8R25%&	8.25	1	S, W, N, Z	B, D, F	S	P, R	DAL, SHA, TEP

RWR81#8R35%&	8.35	1	S, W, N, Z	B, D	S	P, R	DAL, SHA, TEP
RWR81#8R45%&	8.45	1	S, W, N, Z	B, D, F	S	P, R	DAL, SHA, TEP
RWR81#8R56%&	8.56	1	S, W, N, Z	B, D	S	P, R	DAL, SHA, TEP
RWR81#8R66%&	8.66	1	S, W, N, Z	B, D, F	S	P, R	DAL, SHA, TEP
RWR81#8R76%&	8.76	1	S, W, N, Z	B, D	S	P, R	DAL, SHA, TEP
	Resistance	Power	Terminal	Resistance	Level 1	Level 2	
Part Number	Value (Ohms)	Rating (W)	Characteristic (#)	Tolerance (%)	(FRL)(&)	(FRL)(&)	Manufacturer
RWR81#8R87%&	8.87	1	S, W, N, Z	B, D, F	S	P, R	DAL, SHA, TEP
RWR81#8R98%&	8.98	1	S, W, N, Z	B, D	S	P, R	DAL, SHA, TEP
RWR81#9R09%&	9.09	1	S, W, N, Z	B, D, F	S	P, R	DAL, SHA, TEP
RWR81#9R20%&	9.20	1	S, W, N, Z	B, D	S	P, R	DAL, SHA, TEP
RWR81#9R31%&	9.31	1	S, W, N, Z	B, D, F	S	P, R	DAL, SHA, TEP
RWR81#9R42%&	9.42	1	S, W, N, Z	B, D	S	P, R	DAL, SHA, TEP
RWR81#9R53%&	9.53	1	S, W, N, Z	B, D, F	S	P, R	DAL, SHA, TEP
	Resistance	Power	Terminal	Resistance	Level 1	Level 2	
Part Number	Value (Ohms)	Rating (W)	Characteristic (#)	Tolerance (%)	(FRL)(&)	(FRL)(&)	Manufacturer
RWR81#9R65%&	9.65	1	S, W, N, Z	B, D	S	P, R	DAL, SHA, TEP
RWR81#9R76%&	9.76	1	S, W, N, Z	B, D, F	S	P, R	DAL, SHA, TEP
RWR81#9R88%&	9.88	1	S, W, N, Z	B, D	S	P, R	DAL, SHA, TEP

RWR81 Wirewound Resistors: 10.0 Ohms through 98.8 Ohms

	Resistance	Power	Terminal	Resistance	Level 1	Level 2	
Part Number	Value (Ohms)	Rating (W)	Characteristic (#)	Tolerance (%)	(FRL)(&)	(FRL)(&)	Manufacturer
RWR81#10R0%&	10.0	1	S, W, N, Z	B, D, F	S	P, R	DAL, SHA, TEP
RWR81#10R1%&	10.1	1	S, W, N, Z	B, D	S	P, R	DAL, SHA, TEP
RWR81#10R2%&	10.2	1	S, W, N, Z	B, D, F	S	P, R	DAL, SHA, TEP
RWR81#10R4%&	10.4	1	S, W, N, Z	B, D	S	P, R	DAL, SHA, TEP
RWR81#10R5%&	10.5	1	S, W, N, Z	B, D, F	S	P, R	DAL, SHA, TEP
RWR81#10R6%&	10.6	1	S, W, N, Z	B, D	S	P, R	DAL, SHA, TEP
RWR81#10R7%&	10.7	1	S, W, N, Z	B, D, F	S	P, R	DAL, SHA, TEP
	Resistance	Power	Terminal	Resistance	Level 1	Level 2	
Part Number	Value (Ohms)	Rating (W)	Characteristic (#)	Tolerance (%)	(FRL)(&)	(FRL)(&)	Manufacturer
RWR81#10R9%&	10.9	1	S, W, N, Z	B, D	S	P, R	DAL, SHA, TEP
RWR81#11R0%&	11.0	1	S, W, N, Z	B, D, F	S	P, R	DAL, SHA, TEP
RWR81#11R1%&	11.1	1	S, W, N, Z	B, D	S	P, R	DAL, SHA, TEP
RWR81#11R3%&	11.3	1	S, W, N, Z	B, D, F	S	P, R	DAL, SHA, TEP
RWR81#11R4%&	11.4	1	S, W, N, Z	B, D	S	P, R	DAL, SHA, TEP
RWR81#11R5%&	11.5	1	S, W, N, Z	B, D, F	S	P, R	DAL, SHA, TEP
RWR81#11R7%&	11.7	1	S, W, N, Z	B, D	S	P, R	DAL, SHA, TEP
	Resistance	Power	Terminal	Resistance	Level 1	Level 2	
Part Number	Value (Ohms)	Rating (W)	Characteristic (#)	Tolerance (%)	(FRL)(&)	(FRL)(&)	Manufacturer
RWR81#11R8%&	11.8	1	S, W, N, Z	B, D, F	S	P, R	DAL, SHA, TEP
RWR81#12R0%&	12.0	1	S, W, N, Z	B, D	S	P, R	DAL, SHA, TEP
RWR81#12R1%&	12.1	1	S, W, N, Z	B, D, F	S	P, R	DAL, SHA, TEP

RWR81#12R3%&	12.3	1	S, W, N, Z	B, D	S	P, R	DAL, SHA, TEP
RWR81#12R4%&	12.4	1	S, W, N, Z	B, D, F	S	P, R	DAL, SHA, TEP
RWR81#12R6%&	12.6	1	S, W, N, Z	B, D	S	P, R	DAL, SHA, TEP
RWR81#12R7%&	12.7	1	S, W, N, Z	B, D, F	S	P, R	DAL, SHA, TEP
	Resistance	Power	Terminal	Resistance	Level 1	Level 2	
Part Number	Value (Ohms)	Rating (W)	Characteristic (#)	Tolerance (%)	(FRL)(&)	(FRL)(&)	Manufacturer
RWR81#12R9%&	12.9	1	S, W, N, Z	B, D	S	P, R	DAL, SHA, TEP
RWR81#13R0%&	13.0	1	S, W, N, Z	B, D, F	S	P, R	DAL, SHA, TEP
RWR81#13R2%&	13.2	1	S, W, N, Z	B, D	S	P, R	DAL, SHA, TEP
RWR81#13R3%&	13.3	1	S, W, N, Z	B, D, F	S	P, R	DAL, SHA, TEP
RWR81#13R5%&	13.5	1	S, W, N, Z	B, D	S	P, R	DAL, SHA, TEP
RWR81#13R7%&	13.7	1	S, W, N, Z	B, D, F	S	P, R	DAL, SHA, TEP
RWR81#13R8%&	13.8	1	S, W, N, Z	B, D	S	P, R	DAL, SHA, TEP
	Resistance	Power	Terminal	Resistance	Level 1	Level 2	
Part Number	Value (Ohms)	Rating (W)	Characteristic (#)	Tolerance (%)	(FRL)(&)	(FRL)(&)	Manufacturer
RWR81#14R0%&	14.0	1	S, W, N, Z	B, D, F	S	P, R	DAL, SHA, TEP
RWR81#14R2%&	14.2	1	S, W, N, Z	B, D	S	P, R	DAL, SHA, TEP
RWR81#14R3%&	14.3	1	S, W, N, Z	B, D, F	S	P, R	DAL, SHA, TEP
RWR81#14R5%&	14.5	1	S, W, N, Z	B, D	S	P, R	DAL, SHA, TEP
RWR81#14R7%&	14.7	1	S, W, N, Z	B, D, F	S	P, R	DAL, SHA, TEP
RWR81#14R9%&	14.9	1	S, W, N, Z	B, D	S	P, R	DAL, SHA, TEP
RWR81#15R0%&	15.0	1	S, W, N, Z	B, D, F	S	P, R	DAL, SHA, TEP
	Resistance	Power	Terminal	Resistance	Level 1	Level 2	
Part Number	Value (Ohms)	Rating (W)	Characteristic (#)	Tolerance (%)	(FRL)(&)	(FRL)(&)	Manufacturer
RWR81#15R2%&	15.2	1	S, W, N, Z	B, D	S	P, R	DAL, SHA, TEP
RWR81#15R4%&	15.4	1	S, W, N, Z	B, D, F	S	P, R	DAL, SHA, TEP
RWR81#15R6%&	15.6	1	S, W, N, Z	B, D	S	P, R	DAL, SHA, TEP
RWR81#15R8%&	15.8	1	S, W, N, Z	B, D, F	S	P, R	DAL, SHA, TEP
RWR81#16R0%&	16.0	1	S, W, N, Z	B, D	S	P, R	DAL, SHA, TEP
RWR81#16R2%&	16.2	1	S, W, N, Z	B, D, F	S	P, R	DAL, SHA, TEP
RWR81#16R4%&	16.4	1	S, W, N, Z	B, D	S	P, R	DAL, SHA, TEP
	Resistance	Power	Terminal	Resistance	Level 1	Level 2	
Part Number	Value (Ohms)	Rating (W)	Characteristic (#)	Tolerance (%)	(FRL)(&)	(FRL)(&)	Manufacturer
RWR81#16R5%&	16.5	1	S, W, N, Z	B, D, F	S	P, R	DAL, SHA, TEP
RWR81#16R7%&	16.7	1	S, W, N, Z	B, D	S	P, R	DAL, SHA, TEP
RWR81#16R9%&	16.9	1	S, W, N, Z	B, D, F	S	P, R	DAL, SHA, TEP
RWR81#17R2%&	17.2	1	S, W, N, Z	B, D	S	P, R	DAL, SHA, TEP
RWR81#17R4%&	17.4	1	S, W, N, Z	B, D, F	S	P, R	DAL, SHA, TEP
RWR81#17R6%&	17.6	1	S, W, N, Z	B, D	S	P, R	DAL, SHA, TEP
RWR81#17R8%&	17.8	1	S, W, N, Z	B, D, F	S	P, R	DAL, SHA, TEP
	Resistance	Power	Terminal	Resistance	Level 1	Level 2	
Part Number	Value (Ohms)	Rating (W)	Characteristic (#)	Tolerance (%)	(FRL)(&)	(FRL)(&)	Manufacturer
RWR81#18R0%&	18.0	1	S, W, N, Z	B, D, F	S	P, R	DAL, SHA, TEP
RWR81#18R2%&	18.2	1	S, W, N, Z	B, D, F	S	P, R	DAL, SHA, TEP
RWR81#18R4%&	18.4	1	S, W, N, Z	B, D	S	P, R	DAL, SHA, TEP
RWR81#18R7%&	18.7	1	S, W, N, Z	B, D, F	S	P, R	DAL, SHA, TEP
RWR81#18R9%&	18.9	1	S, W, N, Z	B, D	S	P, R	DAL, SHA, TEP

RWR81#19R1%&	19.1	1	S, W, N, Z	B, D, F	S	P, R	DAL, SHA, TEP
RWR81#19R3%&	19.3	1	S, W, N, Z	B, D	S	P, R	DAL, SHA, TEP
	Resistance	Power	Terminal	Resistance	Level 1	Level 2	
Part Number	Value (Ohms)	Rating (W)	Characteristic (#)	Tolerance (%)	(FRL)(&)	(FRL)(&)	Manufacturer
RWR81#19R6%&	19.6	1	S, W, N, Z	B, D, F	S	P, R	DAL, SHA, TEP
RWR81#19R8%&	19.8	1	S, W, N, Z	B, D	S	P, R	DAL, SHA, TEP
RWR81#20R0%&	20.0	1	S, W, N, Z	B, D, F	S	P, R	DAL, SHA, TEP
RWR81#20R3%&	20.3	1	S, W, N, Z	B, D	S	P, R	DAL, SHA, TEP
RWR81#20R5%&	20.5	1	S, W, N, Z	B, D, F	S	P, R	DAL, SHA, TEP
RWR81#20R8%&	20.8	1	S, W, N, Z	B, D	S	P, R	DAL, SHA, TEP
RWR81#21R0%&	21.0	1	S, W, N, Z	B, D, F	S	P, R	DAL, SHA, TEP
	Resistance	Power	Terminal	Resistance	Level 1	Level 2	
Part Number	Value (Ohms)	Rating (W)	Characteristic (#)	Tolerance (%)	(FRL)(&)	(FRL)(&)	Manufacturer
RWR81#21R3%&	21.3	1	S, W, N, Z	B, D	S	P, R	DAL, SHA, TEP
RWR81#21R5%&	21.5	1	S, W, N, Z	B, D, F	S	P, R	DAL, SHA, TEP
RWR81#21R8%&	21.8	1	S, W, N, Z	B, D	S	P, R	DAL, SHA, TEP
RWR81#22R1%&	22.1	1	S, W, N, Z	B, D, F	S	P, R	DAL, SHA, TEP
RWR81#22R3%&	22.3	1	S, W, N, Z	B, D	S	P, R	DAL, SHA, TEP
RWR81#22R6%&	22.6	1	S, W, N, Z	B, D, F	S	P, R	DAL, SHA, TEP
RWR81#22R9%&	22.9	1	S, W, N, Z	B, D	S	P, R	DAL, SHA, TEP
	Resistance	Power	Terminal	Resistance	Level 1	Level 2	
Part Number	Value (Ohms)	Rating (W)	Characteristic (#)	Tolerance (%)	(FRL)(&)	(FRL)(&)	Manufacturer
RWR81#23R2%&	23.2	1	S, W, N, Z	B, D, F	S	P, R	DAL, SHA, TEP
RWR81#23R4%&	23.4	1	S, W, N, Z	B, D	S	P, R	DAL, SHA, TEP
RWR81#23R7%&	23.7	1	S, W, N, Z	B, D, F	S	P, R	DAL, SHA, TEP
RWR81#24R0%&	24.0	1	S, W, N, Z	B, D	S	P, R	DAL, SHA, TEP
RWR81#24R3%&	24.3	1	S, W, N, Z	B, D, F	S	P, R	DAL, SHA, TEP
RWR81#24R6%&	24.6	1	S, W, N, Z	B, D	S	P, R	DAL, SHA, TEP
RWR81#24R9%&	24.9	1	S, W, N, Z	B, D, F	S	P, R	DAL, SHA, TEP
	Resistance	Power	Terminal	Resistance	Level 1	Level 2	
Part Number	Value (Ohms)	Rating (W)	Characteristic (#)	Tolerance (%)	(FRL)(&)	(FRL)(&)	Manufacturer
RWR81#25R2%&	25.2	1	S, W, N, Z	B, D	S	P, R	DAL, SHA, TEP
RWR81#25R5%&	25.5	1	S, W, N, Z	B, D, F	S	P, R	DAL, SHA, TEP
RWR81#25R8%&	25.8	1	S, W, N, Z	B, D	S	P, R	DAL, SHA, TEP
RWR81#26R1%&	26.1	1	S, W, N, Z	B, D, F	S	P, R	DAL, SHA, TEP
RWR81#26R4%&	26.4	1	S, W, N, Z	B, D	S	P, R	DAL, SHA, TEP
RWR81#26R7%&	26.7	1	S, W, N, Z	B, D, F	S	P, R	DAL, SHA, TEP
RWR81#27R1%&	27.1	1	S, W, N, Z	B, D	S	P, R	DAL, SHA, TEP
	Resistance	Power	Terminal	Resistance	Level 1	Level 2	
Part Number	Value (Ohms)	Rating (W)	Characteristic (#)	Tolerance (%)	(FRL)(&)	(FRL)(&)	Manufacturer
RWR81#27R4%&	27.4	1	S, W, N, Z	B, D, F	S	P, R	DAL, SHA, TEP
RWR81#27R7%&	27.7	1	S, W, N, Z	B, D	S	P, R	DAL, SHA, TEP
RWR81#28R0%&	28.0	1	S, W, N, Z	B, D, F	S	P, R	DAL, SHA, TEP
RWR81#28R4%&	28.4	1	S, W, N, Z	B, D	S	P, R	DAL, SHA, TEP
RWR81#28R7%&	28.7	1	S, W, N, Z	B, D, F	S	P, R	DAL, SHA, TEP
RWR81#29R1%&	29.1	1	S, W, N, Z	B, D	S	P, R	DAL, SHA, TEP
RWR81#29R4%&	29.4	1	S, W, N, Z	B, D, F	S	P, R	DAL, SHA, TEP

	Resistance	Power	Terminal	Resistance	Level 1	Level 2	
Part Number	Value (Ohms)	Rating (W)	Characteristic (#)	Tolerance (%)	(FRL)(&)	(FRL)(&)	Manufacturer
RWR81#29R8%&	29.8	1	S, W, N, Z	B, D	S	P, R	DAL, SHA, TEP
RWR81#30R1%&	30.1	1	S, W, N, Z	B, D, F	S	P, R	DAL, SHA, TEP
RWR81#30R5%&	30.5	1	S, W, N, Z	B, D	S	P, R	DAL, SHA, TEP
RWR81#30R9%&	30.9	1	S, W, N, Z	B, D, F	S	P, R	DAL, SHA, TEP
RWR81#31R2%&	31.2	1	S, W, N, Z	B, D	S	P, R	DAL, SHA, TEP
RWR81#31R6%&	31.6	1	S, W, N, Z	B, D, F	S	P, R	DAL, SHA, TEP
RWR81#32R0%&	32.0	1	S, W, N, Z	B, D	S	P, R	DAL, SHA, TEP
	Resistance	Power	Terminal	Resistance	Level 1	Level 2	
Part Number	Value (Ohms)	Rating (W)	Characteristic (#)	Tolerance (%)	(FRL)(&)	(FRL)(&)	Manufacturer
RWR81#32R4%&	32.4	1	S, W, N, Z	B, D, F	S	P, R	DAL, SHA, TEP
RWR81#32R8%&	32.8	1	S, W, N, Z	B, D	S	P, R	DAL, SHA, TEP
RWR81#33R2%&	33.2	1	S, W, N, Z	B, D, F	S	P, R	DAL, SHA, TEP
RWR81#33R6%&	33.6	1	S, W, N, Z	B, D	S	P, R	DAL, SHA, TEP
RWR81#34R0%&	34.0	1	S, W, N, Z	B, D, F	S	P, R	DAL, SHA, TEP
RWR81#34R4%&	34.4	1	S, W, N, Z	B, D	S	P, R	DAL, SHA, TEP
RWR81#34R8%&	34.8	1	S, W, N, Z	B, D, F	S	P, R	DAL, SHA, TEP
	Resistance	Power	Terminal	Resistance	Level 1	Level 2	
Part Number	Value (Ohms)	Rating (W)	Characteristic (#)	Tolerance (%)	(FRL)(&)	(FRL)(&)	Manufacturer
RWR81#35R2%&	35.2	1	S, W, N, Z	B, D	S	P, R	DAL, SHA, TEP
RWR81#35R7%&	35.7	1	S, W, N, Z	B, D, F	S	P, R	DAL, SHA, TEP
RWR81#36R1%&	36.1	1	S, W, N, Z	B, D	S	P, R	DAL, SHA, TEP
RWR81#36R5%&	36.5	1	S, W, N, Z	B, D, F	S	P, R	DAL, SHA, TEP
RWR81#37R0%&	37.0	1	S, W, N, Z	B, D	S	P, R	DAL, SHA, TEP
RWR81#37R4%&	37.4	1	S, W, N, Z	B, D, F	S	P, R	DAL, SHA, TEP
RWR81#37R9%&	37.9	1	S, W, N, Z	B, D	S	P, R	DAL, SHA, TEP
	Resistance	Power	Terminal	Resistance	Level 1	Level 2	
Part Number	Value (Ohms)	Rating (W)	Characteristic (#)	Tolerance (%)	(FRL)(&)	(FRL)(&)	Manufacturer
RWR81#38R3%&	38.3	1	S, W, N, Z	B, D, F	S	P, R	DAL, SHA, TEP
RWR81#38R8%&	38.8	1	S, W, N, Z	B, D	S	P, R	DAL, SHA, TEP
RWR81#39R2%&	39.2	1	S, W, N, Z	B, D, F	S	P, R	DAL, SHA, TEP
RWR81#39R7%&	39.7	1	S, W, N, Z	B, D	S	P, R	DAL, SHA, TEP
RWR81#40R2%&	40.2	1	S, W, N, Z	B, D, F	S	P, R	DAL, SHA, TEP
RWR81#40R7%&	40.7	1	S, W, N, Z	B, D	S	P, R	DAL, SHA, TEP
RWR81#41R2%&	41.2	1	S, W, N, Z	B, D, F	S	P, R	DAL, SHA, TEP
	Resistance	Power	Terminal	Resistance	Level 1	Level 2	
Part Number	Value (Ohms)	Rating (W)	Characteristic (#)	Tolerance (%)	(FRL)(&)	(FRL)(&)	Manufacturer
RWR81#41R7%&	41.7	1	S, W, N, Z	B, D	S	P, R	DAL, SHA, TEP
RWR81#42R2%&	42.2	1	S, W, N, Z	B, D, F	S	P, R	DAL, SHA, TEP
RWR81#42R7%&	42.7	1	S, W, N, Z	B, D	S	P, R	DAL, SHA, TEP
RWR81#43R2%&	43.2	1	S, W, N, Z	B, D, F	S	P, R	DAL, SHA, TEP
RWR81#43R7%&	43.7	1	S, W, N, Z	B, D	S	P, R	DAL, SHA, TEP
RWR81#44R2%&	44.2	1	S, W, N, Z	B, D, F	S	P, R	DAL, SHA, TEP
RWR81#44R8%&	44.8	1	S, W, N, Z	B, D	S	P, R	DAL, SHA, TEP
	Resistance	Power	Terminal	Resistance	Level 1	Level 2	
Part Number	Value (Ohms)	Rating (W)	Characteristic (#)	Tolerance (%)	(FRL)(&)	(FRL)(&)	Manufacturer

RWR81#45R3%&	45.3	1	S, W, N, Z	B, D, F	S	P, R	DAL, SHA, TEP
RWR81#45R9%&	45.9	1	S, W, N, Z	B, D	S	P, R	DAL, SHA, TEP
RWR81#46R4%&	46.4	1	S, W, N, Z	B, D, F	S	P, R	DAL, SHA, TEP
RWR81#47R0%&	47.0	1	S, W, N, Z	B, D	S	P, R	DAL, SHA, TEP
RWR81#47R5%&	47.5	1	S, W, N, Z	B, D, F	S	P, R	DAL, SHA, TEP
RWR81#48R1%&	48.1	1	S, W, N, Z	B, D	S	P, R	DAL, SHA, TEP
RWR81#48R7%&	48.7	1	S, W, N, Z	B, D, F	S	P, R	DAL, SHA, TEP
	Resistance	Power	Terminal	Resistance	Level 1	Level 2	
Part Number	Value (Ohms)	Rating (W)	Characteristic (#)	Tolerance (%)	(FRL)(&)	(FRL)(&)	Manufacturer
RWR81#49R3%&	49.3	1	S, W, N, Z	B, D	S	P, R	DAL, SHA, TEP
RWR81#49R9%&	49.9	1	S, W, N, Z	B, D, F	S	P, R	DAL, SHA, TEP
RWR81#50R5%&	50.5	1	S, W, N, Z	B, D	S	P, R	DAL, SHA, TEP
RWR81#51R1%&	51.1	1	S, W, N, Z	B, D, F	S	P, R	DAL, SHA, TEP
RWR81#51R7%&	51.7	1	S, W, N, Z	B, D	S	P, R	DAL, SHA, TEP
RWR81#52R3%&	52.3	1	S, W, N, Z	B, D, F	S	P, R	DAL, SHA, TEP
RWR81#53R0%&	53.0	1	S, W, N, Z	B, D	S	P, R	DAL, SHA, TEP
	Resistance	Power	Terminal	Resistance	Level 1	Level 2	
Part Number	Value (Ohms)	Rating (W)	Characteristic (#)	Tolerance (%)	(FRL)(&)	(FRL)(&)	Manufacturer
RWR81#53R6%&	53.6	1	S, W, N, Z	B, D, F	S	P, R	DAL, SHA, TEP
RWR81#54R2%&	54.2	1	S, W, N, Z	B, D	S	P, R	DAL, SHA, TEP
RWR81#54R9%&	54.9	1	S, W, N, Z	B, D, F	S	P, R	DAL, SHA, TEP
RWR81#55R6%&	55.6	1	S, W, N, Z	B, D	S	P, R	DAL, SHA, TEP
RWR81#56R2%&	56.2	1	S, W, N, Z	B, D, F	S	P, R	DAL, SHA, TEP
RWR81#56R9%&	56.9	1	S, W, N, Z	B, D	S	P, R	DAL, SHA, TEP
RWR81#57R6%&	57.6	1	S, W, N, Z	B, D, F	S	P, R	DAL, SHA, TEP
	Resistance	Power	Terminal	Resistance	Level 1	Level 2	
Part Number	Value (Ohms)	Rating (W)	Characteristic (#)	Tolerance (%)	(FRL)(&)	(FRL)(&)	Manufacturer
RWR81#58R3%&	58.3	1	S, W, N, Z	B, D	S	P, R	DAL, SHA, TEP
RWR81#59R0%&	59.0	1	S, W, N, Z	B, D, F	S	P, R	DAL, SHA, TEP
RWR81#59R7%&	59.7	1	S, W, N, Z	B, D	S	P, R	DAL, SHA, TEP
RWR81#60R4%&	60.4	1	S, W, N, Z	B, D, F	S	P, R	DAL, SHA, TEP
RWR81#61R2%&	61.2	1	S, W, N, Z	B, D	S	P, R	DAL, SHA, TEP
RWR81#61R9%&	61.9	1	S, W, N, Z	B, D, F	S	P, R	DAL, SHA, TEP
RWR81#62R6%&	62.6	1	S, W, N, Z	B, D	S	P, R	DAL, SHA, TEP
	Resistance	Power	Terminal	Resistance	Level 1	Level 2	
Part Number	Value (Ohms)	Rating (W)	Characteristic (#)	Tolerance (%)	(FRL)(&)	(FRL)(&)	Manufacturer
RWR81#63R4%&	63.4	1	S, W, N, Z	B, D, F	S	P, R	DAL, SHA, TEP
RWR81#64R2%&	64.2	1	S, W, N, Z	B, D	S	P, R	DAL, SHA, TEP
RWR81#64R9%&	64.9	1	S, W, N, Z	B, D, F	S	P, R	DAL, SHA, TEP
RWR81#65R7%&	65.7	1	S, W, N, Z	B, D	S	P, R	DAL, SHA, TEP
RWR81#66R5%&	66.5	1	S, W, N, Z	B, D, F	S	P, R	DAL, SHA, TEP
RWR81#67R3%&	67.3	1	S, W, N, Z	B, D	S	P, R	DAL, SHA, TEP
RWR81#68R1%&	68.1	1	S, W, N, Z	B, D, F	S	P, R	DAL, SHA, TEP
	Resistance	Power	Terminal	Resistance	Level 1	Level 2	
Part Number	Value (Ohms)	Rating (W)	Characteristic (#)	Tolerance (%)	(FRL)(&)	(FRL)(&)	Manufacturer
RWR81#69R0%&	69.0	1	S, W, N, Z	B, D	S	P, R	DAL, SHA, TEP
RWR81#69R8%&	69.8	1	S, W, N, Z	B, D, F	S	P, R	DAL, SHA, TEP

RWR81#70R6%&	70.6	1	S, W, N, Z	B, D	S	P, R	DAL, SHA, TEP
RWR81#71R5%&	71.5	1	S, W, N, Z	B, D, F	S	P, R	DAL, SHA, TEP
RWR81#72R3%&	72.3	1	S, W, N, Z	B, D	S	P, R	DAL, SHA, TEP
RWR81#73R2%&	73.2	1	S, W, N, Z	B, D, F	S	P, R	DAL, SHA, TEP
RWR81#74R1%&	74.1	1	S, W, N, Z	B, D	S	P, R	DAL, SHA, TEP
	Resistance	Power	Terminal	Resistance	Level 1	Level 2	
Part Number	Value (Ohms)	Rating (W)	Characteristic (#)	Tolerance (%)	(FRL)(&)	(FRL)(&)	Manufacturer
RWR81#75R0%&	75.0	1	S, W, N, Z	B, D, F	S	P, R	DAL, SHA, TEP
RWR81#75R9%&	75.9	1	S, W, N, Z	B, D	S	P, R	DAL, SHA, TEP
RWR81#76R8%&.	76.8	1	S, W, N, Z	B, D, F	S	P, R	DAL, SHA, TEP
RWR81#77R7%&.	77.7	1	S, W, N, Z	B, D	S	P, R	DAL, SHA, TEP
RWR81#78R7%&	78.7	1	S, W, N, Z	B, D, F	S	P, R	DAL, SHA, TEP
RWR81#79R6%&	79.6	1	S, W, N, Z	B, D	S	P, R	DAL, SHA, TEP
RWR81#80R6%&	80.6	1	S, W, N, Z	B, D, F	S	P, R	DAL, SHA, TEP
	Resistance	Power	Terminal	Resistance	Level 1	Level 2	
Part Number	Value (Ohms)	Rating (W)	Characteristic (#)	Tolerance (%)	(FRL)(&)	(FRL)(&)	Manufacturer
RWR81#81R6%&	81.6	1	S, W, N, Z	B, D	S	P, R	DAL, SHA, TEP
RWR81#82R5%&	82.5	1	S, W, N, Z	B, D, F	S	P, R	DAL, SHA, TEP
RWR81#83R5%&	83.5	1	S, W, N, Z	B, D	S	P, R	DAL, SHA, TEP
RWR81#84R5%&	84.5	1	S, W, N, Z	B, D, F	S	P, R	DAL, SHA, TEP
RWR81#85R6%&	85.6	1	S, W, N, Z	B, D	S	P, R	DAL, SHA, TEP
RWR81#86R6%&	86.6	1	S, W, N, Z	B, D, F	S	P, R	DAL, SHA, TEP
RWR81#87R6%&	87.6	1	S, W, N, Z	B, D	S	P, R	DAL, SHA, TEP
	Resistance	Power	Terminal	Resistance	Level 1	Level 2	
Part Number	Value (Ohms)	Rating (W)	Characteristic (#)	Tolerance (%)	(FRL)(&)	(FRL)(&)	Manufacturer
RWR81#88R7%&	88.7	1	S, W, N, Z	B, D, F	S	P, R	DAL, SHA, TEP
RWR81#89R8%&	89.8	1	S, W, N, Z	B, D	S	P, R	DAL, SHA, TEP
RWR81#90R9%&	90.9	1	S, W, N, Z	B, D, F	S	P, R	DAL, SHA, TEP
RWR81#92R0%&	92.0	1	S, W, N, Z	B, D	S	P, R	DAL, SHA, TEP
RWR81#93R1%&	93.1	1	S, W, N, Z	B, D, F	S	P, R	DAL, SHA, TEP
RWR81#94R2%&	94.2	1	S, W, N, Z	B, D	S	P, R	DAL, SHA, TEP
RWR81#95R3%&	95.3	1	S, W, N, Z	B, D, F	S	P, R	DAL, SHA, TEP
	Resistance	Power	Terminal	Resistance	Level 1	Level 2	
Part Number	Value (Ohms)	Rating (W)	Characteristic (#)	Tolerance (%)	(FRL)(&)	(FRL)(&)	Manufacturer
RWR81#96R5%&	96.5	1	S, W, N, Z	B, D	S	P, R	DAL, SHA, TEP
RWR81#97R6%&	97.6	1	S, W, N, Z	B, D, F	S	P, R	DAL, SHA, TEP
RWR81#98R8%&	98.8	1	S, W, N, Z	B, D	S	P, R	DAL, SHA, TEP

RWR81 Wirewound Resistors: 100 Ohms through 493 Ohms

	Resistance	Power	Terminal	Resistance	Level 1	Level 2	
Part Number	Value (Ohms)	Rating (W)	Characteristic (#)	Tolerance (%)	(FRL)(&)	(FRL)(&)	Manufacturer
RWR81#1000%&	100	1	S, W, N, Z	B, D, F	S	P, R	DAL, SHA, TEP
RWR81#1010%&	101	1	S, W, N, Z	B, D	S	P, R	DAL, SHA, TEP
RWR81#1020%&	102	1	S, W, N, Z	B, D, F	S	P, R	DAL, SHA, TEP

RWR81#1040%&	104	1	S, W, N, Z	B, D	S	P, R	DAL, SHA, TEP
RWR81#1050%&	105	1	S, W, N, Z	B, D, F	S	P, R	DAL, SHA, TEP
RWR81#1060%&	106	1	S, W, N, Z	B, D	S	P, R	DAL, SHA, TEP
RWR81#1070%&	107	1	S, W, N, Z	B, D, F	S	P, R	DAL, SHA, TEP
RWR81#1090%&	109	1	S, W, N, Z	B, D	S	P, R	DAL, SHA, TEP
RWR81#1100%&	110	1	S, W, N, Z	B, D, F	S	P, R	DAL, SHA, TEP
RWR81#1110%&	111	1	S, W, N, Z	B, D	S	P, R	DAL, SHA, TEP
RWR81#1130%&	113	1	S, W, N, Z	B, D, F	S	P, R	DAL, SHA, TEP
RWR81#1140%&	114	1	S, W, N, Z	B, D	S	P, R	DAL, SHA, TEP
RWR81#1150%&	115	1	S, W, N, Z	B, D, F	S	P, R	DAL, SHA, TEP
	Resistance	Power	Terminal	Resistance	Level 1	Level 2	
Part Number	Value (Ohms)	Rating (W)	Characteristic (#)	Tolerance (%)	(FRL)(&)	(FRL)(&)	Manufacturer
RWR81#1170%&	117	1	S, W, N, Z	B, D	S	P, R	DAL, SHA, TEP
RWR81#1180%&	118	1	S, W, N, Z	B, D, F	S	P, R	DAL, SHA, TEP
RWR81#1200%&	120	1	S, W, N, Z	B, D	S	P, R	DAL, SHA, TEP
RWR81#1210%&	121	1	S, W, N, Z	B, D, F	S	P, R	DAL, SHA, TEP
RWR81#1230%&	123	1	S, W, N, Z	B, D	S	P, R	DAL, SHA, TEP
RWR81#1240%&	124	1	S, W, N, Z	B, D, F	S	P, R	DAL, SHA, TEP
RWR81#1260%&	126	1	S, W, N, Z	B, D	S	P, R	DAL, SHA, TEP
RWR81#1270%&	127	1	S, W, N, Z	B, D, F	S	P, R	DAL, SHA, TEP
RWR81#1290%&	129	1	S, W, N, Z	B, D	S	P, R	DAL, SHA, TEP
RWR81#1300%&	130	1	S, W, N, Z	B, D, F	S	P, R	DAL, SHA, TEP
RWR81#1320%&	132	1	S, W, N, Z	B, D	S	P, R	DAL, SHA, TEP
RWR81#1330%&	133	1	S, W, N, Z	B, D, F	S	P, R	DAL, SHA, TEP
RWR81#1350%&	135	1	S, W, N, Z	B, D	S	P, R	DAL, SHA, TEP
RWR81#1370%&	137	1	S, W, N, Z	B, D, F	S	P, R	DAL, SHA, TEP
RWR81#1380%&	138	1	S, W, N, Z	B, D	S	P, R	DAL, SHA, TEP
	Resistance	Power	Terminal	Resistance	Level 1	Level 2	
Part Number	Value (Ohms)	Rating (W)	Characteristic (#)	Tolerance (%)	(FRL)(&)	(FRL)(&)	Manufacturer
RWR81#1400%&	140	1	S, W, N, Z	B, D, F	S	P, R	DAL, SHA, TEP
RWR81#1420%&	142	1	S, W, N, Z	B, D	S	P, R	DAL, SHA, TEP
RWR81#1430%&	143	1	S, W, N, Z	B, D, F	S	P, R	DAL, SHA, TEP
RWR81#1450%&	145	1	S, W, N, Z	B, D	S	P, R	DAL, SHA, TEP
RWR81#1470%&	147	1	S, W, N, Z	B, D, F	S	P, R	DAL, SHA, TEP
RWR81#1490%&	149	1	S, W, N, Z	B, D	S	P, R	DAL, SHA, TEP
RWR81#1500%&	150	1	S, W, N, Z	B, D, F	S	P, R	DAL, SHA, TEP
RWR81#1520%&	152	1	S, W, N, Z	B, D	S	P, R	DAL, SHA, TEP
RWR81#1540%&	154	1	S, W, N, Z	B, D, F	S	P, R	DAL, SHA, TEP
RWR81#1560%&	156	1	S, W, N, Z	B, D	S	P, R	DAL, SHA, TEP
RWR81#1580%&	158	1	S, W, N, Z	B, D, F	S	P, R	DAL, SHA, TEP
RWR81#1600%&	160	1	S, W, N, Z	B, D	S	P, R	DAL, SHA, TEP
	Resistance	Power	Terminal	Resistance	Level 1	Level 2	
Part Number	Value (Ohms)	Rating (W)	Characteristic (#)	Tolerance (%)	(FRL)(&)	(FRL)(&)	Manufacturer
RWR81#1620%&	162	1	S, W, N, Z	B, D, F	S	P, R	DAL, SHA, TEP
RWR81#1640%&	164	1	S, W, N, Z	B, D	S	P, R	DAL, SHA, TEP
RWR81#1650%&	165	1	S, W, N, Z	B, D, F	S	P, R	DAL, SHA, TEP
RWR81#1670%&	167	1	S, W, N, Z	B, D	S	P, R	DAL, SHA, TEP

RWR81#1690%&	169	1	S, W, N, Z	B, D, F	S	P, R	DAL, SHA, TEP
RWR81#1720%&	172	1	S, W, N, Z	B, D	S	P, R	DAL, SHA, TEP
RWR81#1740%&	174	1	S, W, N, Z	B, D, F	S	P, R	DAL, SHA, TEP
RWR81#1760%&	176	1	S, W, N, Z	B, D	S	P, R	DAL, SHA, TEP
RWR81#1780%&	178	1	S, W, N, Z	B, D, F	S	P, R	DAL, SHA, TEP
RWR81#1800%&	180	1	S, W, N, Z	B, D, F	S	P, R	DAL, SHA, TEP
RWR81#1820%&	182	1	S, W, N, Z	B, D, F	S	P, R	DAL, SHA, TEP
RWR81#1840%&	184	1	S, W, N, Z	B, D	S	P, R	DAL, SHA, TEP
RWR81#1870%&	187	1	S, W, N, Z	B, D, F	S	P, R	DAL, SHA, TEP
RWR81#1890%&	189	1	S, W, N, Z	B, D	S	P, R	DAL, SHA, TEP
	Resistance	Power	Terminal	Resistance	Level 1	Level 2	
Part Number	Value (Ohms)	Rating (W)	Characteristic (#)	Tolerance (%)	(FRL)(&)	(FRL)(&)	Manufacturer
RWR81#1910%&	191	1	S, W, N, Z	B, D, F	S	P, R	DAL, SHA, TEP
RWR81#1930%&	193	1	S, W, N, Z	B, D	S	P, R	DAL, SHA, TEP
RWR81#1960%&	196	1	S, W, N, Z	B, D, F	S	P, R	DAL, SHA, TEP
RWR81#1980%&	198	1	S, W, N, Z	B, D	S	P, R	DAL, SHA, TEP
RWR81#2000%&	200	1	S, W, N, Z	B, D, F	S	P, R	DAL, SHA, TEP
RWR81#2030%&	203	1	S, W, N, Z	B, D	S	P, R	DAL, SHA, TEP
RWR81#2050%&	205	1	S, W, N, Z	B, D, F	S	P, R	DAL, SHA, TEP
RWR81#2080%&	208	1	S, W, N, Z	B, D	S	P, R	DAL, SHA, TEP
RWR81#2100%&	210	1	S, W, N, Z	B, D, F	S	P, R	DAL, SHA, TEP
RWR81#2130%&	213	1	S, W, N, Z	B, D	S	P, R	DAL, SHA, TEP
RWR81#2150%&	215	1	S, W, N, Z	B, D, F	S	P, R	DAL, SHA, TEP
RWR81#2180%&	218	1	S, W, N, Z	B, D	S	P, R	DAL, SHA, TEP
RWR81#2210%&	221	1	S, W, N, Z	B, D, F	S	P, R	DAL, SHA, TEP
RWR81#2230%&	223	1	S, W, N, Z	B, D	S	P, R	DAL, SHA, TEP
	Resistance	Power	Terminal	Resistance	Level 1	Level 2	
Part Number	Value (Ohms)	Rating (W)	Characteristic (#)	Tolerance (%)	(FRL)(&)	(FRL)(&)	Manufacturer
RWR81#2260%&	226	1	S, W, N, Z	B, D, F	S	P, R	DAL, SHA, TEP
RWR81#2290%&	229	1	S, W, N, Z	B, D	S	P, R	DAL, SHA, TEP
RWR81#2320%&	232	1	S, W, N, Z	B, D, F	S	P, R	DAL, SHA, TEP
RWR81#2340%&	234	1	S, W, N, Z	B, D	S	P, R	DAL, SHA, TEP
RWR81#2370%&	237	1	S, W	B, D, F	S	P, R	DAL, SHA, TEP
RWR81#2400%&	240	1	S, W	B, D	S	P, R	DAL, SHA, TEP
RWR81#2430%&	243	1	S, W	B, D, F	S	P, R	DAL, SHA, TEP
RWR81#2460%&	246	1	S, W	B, D	S	P, R	DAL, SHA, TEP
RWR81#2490%&	249	1	S, W	B, D, F	S	P, R	DAL, SHA, TEP
RWR81#2520%&	252	1	S, W	B, D	S	P, R	DAL, SHA, TEP
RWR81#2550%&	255	1	S, W	B, D, F	S	P, R	DAL, SHA, TEP
RWR81#2580%&	258	1	S, W	B, D	S	P, R	DAL, SHA, TEP
RWR81#2610%&	261	1	S, W	B, D, F	S	P, R	DAL, SHA, TEP
RWR81#2640%&	264	1	S, W	B, D	S	P, R	DAL, SHA, TEP
	Resistance	Power	Terminal	Resistance	Level 1	Level 2	
Part Number	Value (Ohms)	Rating (W)	Characteristic (#)	Tolerance (%)	(FRL)(&)	(FRL)(&)	Manufacturer
RWR81#2670%&	267	1	S, W	B, D, F	S	P, R	DAL, SHA, TEP
RWR81#2710%&	271	1	S, W	B, D	S	P, R	DAL, SHA, TEP
RWR81#2740%&	274	1	S, W	B, D, F	S	P, R	DAL, SHA, TEP

RWR81#2770%&	277	1	S, W	B, D	S	P, R	DAL, SHA, TEP
RWR81#2800%&	280	1	S, W	B, D, F	S	P, R	DAL, SHA, TEP
RWR81#2840%&	284	1	S, W	B, D	S	P, R	DAL, SHA, TEP
RWR81#2870%&	287	1	S, W	B, D, F	S	P, R	DAL, SHA, TEP
RWR81#2910%&	291	1	S, W	B, D	S	P, R	DAL, SHA, TEP
RWR81#2940%&	294	1	S, W	B, D, F	S	P, R	DAL, SHA, TEP
RWR81#2980%&	298	1	S, W	B, D	S	P, R	DAL, SHA, TEP
RWR81#3010%&	301	1	S, W	B, D, F	S	P, R	DAL, SHA, TEP
RWR81#3050%&	305	1	S, W	B, D	S	P, R	DAL, SHA, TEP
RWR81#3090%&	309	1	S, W	B, D, F	S	P, R	DAL, SHA, TEP
RWR81#3120%&	312	1	S, W	B, D	S	P, R	DAL, SHA, TEP
	Resistance	Power	Terminal	Resistance	Level 1	Level 2	
Part Number	Value (Ohms)	Rating (W)	Characteristic (#)	Tolerance (%)	(FRL)(&)	(FRL)(&)	Manufacturer
RWR81#3160%&	316	1	S, W	B, D, F	S	P, R	DAL, SHA, TEP
RWR81#3200%&	320	1	S, W	B, D	S	P, R	DAL, SHA, TEP
RWR81#3240%&	324	1	S, W	B, D, F	S	P, R	DAL, SHA, TEP
RWR81#3280%&	328	1	S, W	B, D	S	P, R	DAL, SHA, TEP
RWR81#3320%&	332	1	S, W	B, D, F	S	P, R	DAL, SHA, TEP
RWR81#3360%&	336	1	S, W	B, D	S	P, R	DAL, SHA, TEP
RWR81#3400%&	340	1	S, W	B, D, F	S	P, R	DAL, SHA, TEP
RWR81#3440%&	344	1	S, W	B, D	S	P, R	DAL, SHA, TEP
RWR81#3480%&	348	1	S, W	B, D, F	S	P, R	DAL, SHA, TEP
RWR81#3520%&	352	1	S, W	B, D	S	P, R	DAL, SHA, TEP
RWR81#3570%&	357	1	S, W	B, D, F	S	P, R	DAL, SHA, TEP
RWR81#3610%&	361	1	S, W	B, D	S	P, R	DAL, SHA, TEP
RWR81#3650%&	365	1	S, W	B, D, F	S	P, R	DAL, SHA, TEP
RWR81#3700%&	370	1	S, W	B, D	S	P, R	DAL, SHA, TEP
	Resistance	Power	Terminal	Resistance	Level 1	Level 2	
Part Number	Value (Ohms)	Rating (W)	Characteristic (#)	Tolerance (%)	(FRL)(&)	(FRL)(&)	Manufacturer
RWR81#3740%&	374	1	S, W	B, D, F	S	P, R	DAL, SHA, TEP
RWR81#3790%&	379	1	S, W	B, D	S	P, R	DAL, SHA, TEP
RWR81#3830%&	383	1	S, W	B, D, F	S	P, R	DAL, SHA, TEP
RWR81#3880%&	388	1	S, W	B, D	S	P, R	DAL, SHA, TEP
RWR81#3920%&	392	1	S, W	B, D, F	S	P, R	DAL, SHA, TEP
RWR81#3970%&	397	1	S, W	B, D	S	P, R	DAL, SHA, TEP
RWR81#4020%&	402	1	S, W	B, D, F	S	P, R	DAL, SHA, TEP
RWR81#4070%&	407	1	S, W	B, D	S	P, R	DAL, SHA, TEP
RWR81#4120%&	412	1	S, W	B, D, F	S	P, R	DAL, SHA, TEP
RWR81#4170%&	417	1	S, W	B, D	S	P, R	DAL, SHA, TEP
RWR81#4220%&	422	1	S, W	B, D, F	S	P, R	DAL, SHA, TEP
RWR81#4270%&	427	1	S, W	B, D	S	P, R	DAL, SHA, TEP
RWR81#4320%&	432	1	S, W	B, D, F	S	P, R	DAL, SHA, TEP
RWR81#4370%&	437	1	S, W	B, D	S	P, R	DAL, SHA, TEP
	Resistance	Power	Terminal	Resistance	Level 1	Level 2	
Part Number	Value (Ohms)	Rating (W)	Characteristic (#)	Tolerance (%)	(FRL)(&)	(FRL)(&)	Manufacturer
RWR81#4420%&	442	1	S, W	B, D, F	S	P, R	DAL, SHA, TEP
RWR81#4480%&	448	1	S, W	B, D	S	P, R	DAL, SHA, TEP

RWR81#4530%&	453	1	S, W	B, D, F	S	P, R	DAL, SHA, TEP
RWR81#4590%&	459	1	S, W	B, D	S	P, R	DAL, SHA, TEP
RWR81#4640%&	464	1	S, W	B, D, F	S	P, R	DAL, SHA, TEP
RWR81#4700%&	470	1	S, W	B, D	S	P, R	DAL, SHA, TEP
RWR81#4750%&	475	1	S, W	B, D, F	S	P, R	DAL, SHA, TEP
RWR81#4810%&	481	1	S, W	B, D	S	P, R	DAL, SHA, TEP
RWR81#4870%&	487	1	S, W	B, D, F	S	P, R	DAL, SHA, TEP
RWR81#4930%&	493	1	S, W	B, D	S	P, R	DAL, SHA, TEP
	Resistance	Power	Terminal	Resistance	Level 1	Level 2	
Part Number	Value (Ohms)	Rating (W)	Characteristic (#)	Tolerance (%)	(FRL)(&)	(FRL)(&)	Manufacturer

RWR84 Wirewound Resistors

	Resistance	Power	Terminal	Resistance	Level 1 \	Level 2	
Part Number	Value (Ohms)	Rating (W)	Characteristic (#)	Tolerance (%)	(FRL)(&)	(FRL)(&)	Manufacturer
RWR84#R100%&	0.100	7	S, W, N, Z	B, D, F	S	P, R	DAL, SHA, TEP
RWR84#R101%&	0.101	7	S, W, N, Z	B, D	S	P, R	DAL, SHA, TEP
RWR84#R102%&	0.102	7	S, W, N, Z	B, D, F	S	P, R	DAL, SHA, TEP
RWR84#R104%&	0.104	7	S, W, N, Z	B, D	S	P, R	DAL, SHA, TEP
RWR84#R105%&	0.105	7	S, W, N, Z	B, D, F	S	P, R	DAL, SHA, TEP
RWR84#R106%&	0.106	7	S, W, N, Z	B, D	S	P, R	DAL, SHA, TEP
RWR84#R107%&	0.107	7	S, W, N, Z	B, D, F	S	P, R	DAL, SHA, TEP
RWR84#R109%&	0.109	7	S, W, N, Z	B, D	S	P, R	DAL, SHA, TEP
RWR84#R110%&	0.110	7	S, W, N, Z	B, D, F	S	P, R	DAL, SHA, TEP
RWR84#R111%&	0.111	7	S, W, N, Z	B, D	S	P, R	DAL, SHA, TEP
RWR84#R113%&	0.113	7	S, W, N, Z	B, D, F	S	P, R	DAL, SHA, TEP
RWR84#R114%&	0.114	7	S, W, N, Z	B, D	S	P, R	DAL, SHA, TEP
RWR84#R115%&	0.115	7	S, W, N, Z	B, D, F	S	P, R	DAL, SHA, TEP
RWR84#R117%&	0.117	7	S, W, N, Z	B, D	S	P, R	DAL, SHA, TEP
RWR84#R118%&	0.118	7	S, W, N, Z	B, D, F	S	P, R	DAL, SHA, TEP
RWR84#R120%&	0.120	7	S, W, N, Z	B, D	S	P, R	DAL, SHA, TEP
RWR84#R121%&	0.121	7	S, W, N, Z	B, D, F	S	P, R	DAL, SHA, TEP
RWR84#R123%&	0.123	7	S, W, N, Z	B, D	S	P, R	DAL, SHA, TEP
RWR84#R124%&	0.124	7	S, W, N, Z	B, D, F	S	P, R	DAL, SHA, TEP
RWR84#R126%&	0.126	7	S, W, N, Z	B, D	S	P, R	DAL, SHA, TEP
RWR84#R127%&	0.127	7	S, W, N, Z	B, D, F	S	P, R	DAL, SHA, TEP
RWR84#R129%&	0.129	7	S, W, N, Z	B, D	S	P, R	DAL, SHA, TEP
RWR84#R130%&	0.130	7	S, W, N, Z	B, D, F	S	P, R	DAL, SHA, TEP
RWR84#R132%&	0.132	7	S, W, N, Z	B, D	S	P, R	DAL, SHA, TEP
RWR84#R133%&	0.133	7	S, W, N, Z	B, D, F	S	P, R	DAL, SHA, TEP
RWR84#R135%&	0.135	7	S, W, N, Z	B, D	S	P, R	DAL, SHA, TEP
RWR84#R137%&	0.137	7	S, W, N, Z	B, D, F	S	P, R	DAL, SHA, TEP
RWR84#R138%&	0.138	7	S, W, N, Z	B, D	S	P, R	DAL, SHA, TEP
RWR84#R140%&	0.140	7	S, W, N, Z	B, D, F	S	P, R	DAL, SHA, TEP
RWR84#R142%&	0.142	7	S, W, N, Z	B, D	S	P, R	DAL, SHA, TEP

RWR84#R143%&	0.143	7	S, W, N, Z	B, D, F	S	P, R	DAL, SHA, TEP
RWR84#R145%&	0.145	7	S, W, N, Z	B, D	S	P, R	DAL, SHA, TEP
RWR84#R147%&	0.147	7	S, W, N, Z	B, D, F	S	P, R	DAL, SHA, TEP
RWR84#R149%&	0.149	7	S, W, N, Z	B, D	S	P, R	DAL, SHA, TEP
RWR84#R150%&	0.150	7	S, W, N, Z	B, D, F	S	P, R	DAL, SHA, TEP
RWR84#R152%&	0.152	7	S, W, N, Z	B, D	S	P, R	DAL, SHA, TEP
RWR84#R154%&	0.154	7	S, W, N, Z	B, D, F	S	P, R	DAL, SHA, TEP
RWR84#R156%&	0.156	7	S, W, N, Z	B, D	S	P, R	DAL, SHA, TEP
RWR84#R158%&	0.158	7	S, W, N, Z	B, D, F	S	P, R	DAL, SHA, TEP
RWR84#R160%&	0.160	7	S, W, N, Z	B, D	S	P, R	DAL, SHA, TEP
RWR84#R162%&	0.162	7	S, W, N, Z	B, D, F	S	P, R	DAL, SHA, TEP
RWR84#R164%&	0.164	7	S, W, N, Z	B, D	S	P, R	DAL, SHA, TEP
RWR84#R165%&	0.165	7	S, W, N, Z	B, D, F	S	P, R	DAL, SHA, TEP
RWR84#R167%&	0.167	7	S, W, N, Z	B, D	S	P, R	DAL, SHA, TEP
RWR84#R169%&	0.169	7	S, W, N, Z	B, D, F	S	P, R	DAL, SHA, TEP
RWR84#R172%&	0.172	7	S, W, N, Z	B, D	S	P, R	DAL, SHA, TEP
RWR84#R174%&	0.174	7	S, W, N, Z	B, D, F	S	P, R	DAL, SHA, TEP
RWR84#R176%&	0.176	7	S, W, N, Z	B, D	S	P, R	DAL, SHA, TEP
RWR84#R178#&	0.178	7	S, W, N, Z	B, D, F	S	P, R	DAL, SHA, TEP
RWR84#R180%&	0.180	7	S, W, N, Z	B, D, F	S	P, R	DAL, SHA, TEP
RWR84#R182%&	0.182	7	S, W, N, Z	B, D, F	S	P, R	DAL, SHA, TEP
RWR84#R184%&	0.184	7	S, W, N, Z	B, D	S	P, R	DAL, SHA, TEP
RWR84#R187%&	0.187	7	S, W, N, Z	B, D, F	S	P, R	DAL, SHA, TEP
RWR84#R189%&	0.189	7	S, W, N, Z	B, D	S	P, R	DAL, SHA, TEP
RWR84#R191%&	0.191	7	S, W, N, Z	B, D, F	S	P, R	DAL, SHA, TEP
RWR84#R193%&	0.193	7	S, W, N, Z	B, D	S	P, R	DAL, SHA, TEP
RWR84#R196%&	0.196	7	S, W, N, Z	B, D, F	S	P, R	DAL, SHA, TEP
RWR84#R198%&	0.198	7	S, W, N, Z	B, D	S	P, R	DAL, SHA, TEP
RWR84#R200%&	0.200	7	S, W, N, Z	B, D, F	S	P, R	DAL, SHA, TEP
RWR84#R203%&	0.203	7	S, W, N, Z	B, D	S	P, R	DAL, SHA, TEP
RWR84#R205%&	0.205	7	S, W, N, Z	B, D, F	S	P, R	DAL, SHA, TEP
RWR84#R208%&	0.208	7	S, W, N, Z	B, D	S	P, R	DAL, SHA, TEP
RWR84#R210%&	0.210	7	S, W, N, Z	B, D, F	S	P, R	DAL, SHA, TEP
RWR84#R213%&	0.213	7	S, W, N, Z	B, D	S	P, R	DAL, SHA, TEP
RWR84#R215%&	0.215	7	S, W, N, Z	B, D, F	S	P, R	DAL, SHA, TEP
RWR84#R218%&	0.218	7	S, W, N, Z	B, D	S	P, R	DAL, SHA, TEP
RWR84#R221%&	0.221	7	S, W, N, Z	B, D, F	S	P, R	DAL, SHA, TEP
RWR84#R223%&	0.223	7	S, W, N, Z	B, D	S	P, R	DAL, SHA, TEP
RWR84#R226%&	0.226	7	S, W, N, Z	B, D, F	S	P, R	DAL, SHA, TEP
RWR84#R229%&	0.229	7	S, W, N, Z	B, D	S	P, R	DAL, SHA, TEP
RWR84#R232%&	0.232	7	S, W, N, Z	B, D, F	S	P, R	DAL, SHA, TEP
RWR84#R234%&	0.234	7	S, W, N, Z	B, D	S	P, R	DAL, SHA, TEP
RWR84#R237%&	0.237	7	S, W, N, Z	B, D, F	S	P, R	DAL, SHA, TEP
RWR84#R240%&	0.240	7	S, W, N, Z	B, D	S	P, R	DAL, SHA, TEP
RWR84#R243%&	0.243	7	S, W, N, Z	B, D, F	S	P, R	DAL, SHA, TEP
RWR84#R246%&	0.246	7	S, W, N, Z	B, D	S	P, R	DAL, SHA, TEP
RWR84#R249%&	0.249	7	S, W, N, Z	B, D, F	S	P, R	DAL, SHA, TEP

RWR84#R252%&	0.252	7	S, W, N, Z	B, D	S	P, R	DAL, SHA, TEP
RWR84#R255%&	0.255	7	S, W, N, Z	B, D, F	S	P, R	DAL, SHA, TEP
RWR84#R258%&	0.258	7	S, W, N, Z	B, D	S	P, R	DAL, SHA, TEP
RWR84#R261%&	0.261	7	S, W, N, Z	B, D, F	S	P, R	DAL, SHA, TEP
RWR84#R264%&	0.264	7	S, W, N, Z	B, D	S	P, R	DAL, SHA, TEP
RWR84#R267%&	0.267	7	S, W, N, Z	B, D, F	S	P, R	DAL, SHA, TEP
RWR84#R271%&	0.271	7	S, W, N, Z	B, D	S	P, R	DAL, SHA, TEP
RWR84#R274%&	0.274	7	S, W, N, Z	B, D, F	S	P, R	DAL, SHA, TEP
RWR84#R277%&	0.277	7	S, W, N, Z	B, D	S	P, R	DAL, SHA, TEP
RWR84#R280%&	0.280	7	S, W, N, Z	B, D, F	S	P, R	DAL, SHA, TEP
RWR84#R284%&	0.284	7	S, W, N, Z	B, D	S	P, R	DAL, SHA, TEP
RWR84#R287%&	0.287	7	S, W, N, Z	B, D, F	S	P, R	DAL, SHA, TEP
RWR84#R291%&	0.291	7	S, W, N, Z	B, D	S	P, R	DAL, SHA, TEP
RWR84#R294%&	0.294	7	S, W, N, Z	B, D, F	S	P, R	DAL, SHA, TEP
RWR84#R298%&	0.298	7	S, W, N, Z	B, D	S	P, R	DAL, SHA, TEP
RWR84#R301%&	0.301	7	S, W, N, Z	B, D, F	S	P, R	DAL, SHA, TEP
RWR84#R305%&	0.305	7	S, W, N, Z	B, D	S	P, R	DAL, SHA, TEP
RWR84#R309%&	0.309	7	S, W, N, Z	B, D, F	S	P, R	DAL, SHA, TEP
RWR84#R312%&	0.312	7	S, W, N, Z	B, D	S	P, R	DAL, SHA, TEP
RWR84#R316%&	0.316	7	S, W, N, Z	B, D, F	S	P, R	DAL, SHA, TEP
RWR84#R320%&	0.320	7	S, W, N, Z	B, D	S	P, R	DAL, SHA, TEP
RWR84#R324%&	0.324	7	S, W, N, Z	B, D, F	S	P, R	DAL, SHA, TEP
RWR84#R328%&	0.328	7	S, W, N, Z	B, D	S	P, R	DAL, SHA, TEP
RWR84#R332%&	0.332	7	S, W, N, Z	B, D, F	S	P, R	DAL, SHA, TEP
RWR84#R336%&	0.336	7	S, W, N, Z	B, D	S	P, R	DAL, SHA, TEP
RWR84#R340%&	0.340	7	S, W, N, Z	B, D, F	S	P, R	DAL, SHA, TEP
RWR84#R344%&	0.344	7	S, W, N, Z	B, D	S	P, R	DAL, SHA, TEP
RWR84#R348%&	0.348	7	S, W, N, Z	B, D, F	S	P, R	DAL, SHA, TEP
RWR84#R352%&	0.352	7	S, W, N, Z	B, D	S	P, R	DAL, SHA, TEP
RWR84#R357%&	0.357	7	S, W, N, Z	B, D, F	S	P, R	DAL, SHA, TEP
RWR84#R361%&	0.361	7	S, W, N, Z	B, D	S	P, R	DAL, SHA, TEP
RWR84#R365%&	0.365	7	S, W, N, Z	B, D, F	S	P, R	DAL, SHA, TEP
RWR84#R370%&	0.370	7	S, W, N, Z	B, D	S	P, R	DAL, SHA, TEP
RWR84#R374%&	0.374	7	S, W, N, Z	B, D, F	S	P, R	DAL, SHA, TEP
RWR84#R379%&	0.379	7	S, W, N, Z	B, D	S	P, R	DAL, SHA, TEP
RWR84#R383%&	0.383	7	S, W, N, Z	B, D, F	S	P, R	DAL, SHA, TEP
RWR84#R388%&	0.388	7	S, W, N, Z	B, D	S	P, R	DAL, SHA, TEP
RWR84#R392%&	0.392	7	S, W, N, Z	B, D, F	S	P, R	DAL, SHA, TEP
RWR84#R397%&	0.397	7	S, W, N, Z	B, D	S	P, R	DAL, SHA, TEP
RWR84#R402%&	0.402	7	S, W, N, Z	B, D, F	S	P, R	DAL, SHA, TEP
RWR84#R407%&	0.407	7	S, W, N, Z	B, D	S	P, R	DAL, SHA, TEP
RWR84#R412%&	0.412	7	S, W, N, Z	B, D, F	S	P, R	DAL, SHA, TEP
RWR84#R417%&	0.417	7	S, W, N, Z	B, D	S	P, R	DAL, SHA, TEP
RWR84#R422%&	0.422	7	S, W, N, Z	B, D, F	S	P, R	DAL, SHA, TEP
RWR84#R427%&	0.427	7	S, W, N, Z	B, D	S	P, R	DAL, SHA, TEP
RWR84#R432%&	0.432	7	S, W, N, Z	B, D, F	S	P, R	DAL, SHA, TEP
RWR84#R437%&	0.437	7	S, W, N, Z	B, D	S	P, R	DAL, SHA, TEP

RWR84#R442%&	0.442	7	S, W, N, Z	B, D, F	S	P, R	DAL, SHA, TEP
RWR84#R448%&	0.448	7	S, W, N, Z	B, D	S	P, R	DAL, SHA, TEP
RWR84#R453%&	0.453	7	S, W, N, Z	B, D, F	S	P, R	DAL, SHA, TEP
RWR84#R459%&	0.459	7	S, W, N, Z	B, D	S	P, R	DAL, SHA, TEP
RWR84#R464%&	0.464	7	S, W, N, Z	B, D, F	S	P, R	DAL, SHA, TEP
RWR84#R470%&	0.470	7	S, W, N, Z	B, D	S	P, R	DAL, SHA, TEP
RWR84#R475%&	0.475	7	S, W, N, Z	B, D, F	S	P, R	DAL, SHA, TEP
RWR84#R481%&	0.481	7	S, W, N, Z	B, D	S	P, R	DAL, SHA, TEP
RWR84#R487%&	0.487	7	S, W, N, Z	B, D, F	S	P, R	DAL, SHA, TEP
RWR84#R493%&	0.493	7	S, W, N, Z	B, D	S	P, R	DAL, SHA, TEP
RWR84#R499%&	0.499	7	S, W, N, Z	B, D, F	S	P, R	DAL, SHA, TEP
RWR84#R505%&	0.505	7	S, W, N, Z	B, D	S	P, R	DAL, SHA, TEP
RWR84#R511%&	0.511	7	S, W, N, Z	B, D, F	S	P, R	DAL, SHA, TEP
RWR84#R517%&	0.517	7	S, W, N, Z	B, D	S	P, R	DAL, SHA, TEP
RWR84#R523%&	0.523	7	S, W, N, Z	B, D, F	S	P, R	DAL, SHA, TEP
RWR84#R530%&	0.530	7	S, W, N, Z	B, D	S	P, R	DAL, SHA, TEP
RWR84#R536%&	0.536	7	S, W, N, Z	B, D, F	S	P, R	DAL, SHA, TEP
RWR84#R542%&	0.542	7	S, W, N, Z	B, D	S	P, R	DAL, SHA, TEP
RWR84#R549%&	0.549	7	S, W, N, Z	B, D, F	S	P, R	DAL, SHA, TEP
RWR84#R556%&	0.556	7	S, W, N, Z	B, D	S	P, R	DAL, SHA, TEP
RWR84#R562%&	0.562	7	S, W, N, Z	B, D, F	S	P, R	DAL, SHA, TEP
RWR84#R569%&	0.569	7	S, W, N, Z	B, D	S	P, R	DAL, SHA, TEP
RWR84#R576%&	0.576	7	S, W, N, Z	B, D, F	S	P, R	DAL, SHA, TEP
RWR84#R583%&	0.583	7	S, W, N, Z	B, D	S	P, R	DAL, SHA, TEP
RWR84#R590%&	0.590	7	S, W, N, Z	B, D, F	S	P, R	DAL, SHA, TEP
RWR84#R597%&	0.597	7	S, W, N, Z	B, D	S	P, R	DAL, SHA, TEP
RWR84#R604%&	0.604	7	S, W, N, Z	B, D, F	S	P, R	DAL, SHA, TEP
RWR84#R612%&	0.612	7	S, W, N, Z	B, D	S	P, R	DAL, SHA, TEP
RWR84#R619%&	0.619	7	S, W, N, Z	B, D, F	S	P, R	DAL, SHA, TEP
RWR84#R626%&	0.626	7	S, W, N, Z	B, D	S	P, R	DAL, SHA, TEP
RWR84#R634%&	0.634	7	S, W, N, Z	B, D, F	S	P, R	DAL, SHA, TEP
RWR84#R642%&	0.642	7	S, W, N, Z	B, D	S	P, R	DAL, SHA, TEP
RWR84#R649%&	0.649	7	S, W, N, Z	B, D, F	S	P, R	DAL, SHA, TEP
RWR84#R657%&	0.657	7	S, W, N, Z	B, D	S	P, R	DAL, SHA, TEP
RWR84#R665%&	0.665	7	S, W, N, Z	B, D, F	S	P, R	DAL, SHA, TEP
RWR84#R673%&	0.673	7	S, W, N, Z	B, D	S	P, R	DAL, SHA, TEP
RWR84#R681%&	0.681	7	S, W, N, Z	B, D, F	S	P, R	DAL, SHA, TEP
RWR84#R690%&	0.690	7	S, W, N, Z	B, D	S	P, R	DAL, SHA, TEP
RWR84#R698%&	0.698	7	S, W, N, Z	B, D, F	S	P, R	DAL, SHA, TEP
RWR84#R706%&	0.706	7	S, W, N, Z	B, D	S	P, R	DAL, SHA, TEP
RWR84#R715%&	0.715	7	S, W, N, Z	B, D, F	S	P, R	DAL, SHA, TEP
RWR84#R723%&	0.723	7	S, W, N, Z	B, D	S	P, R	DAL, SHA, TEP
RWR84#R732%&	0.732	7	S, W, N, Z	B, D, F	S	P, R	DAL, SHA, TEP
RWR84#R741%&	0.741	7	S, W, N, Z	B, D	S	P, R	DAL, SHA, TEP
RWR84#R750%&	0.750	7	S, W, N, Z	B, D, F	S	P, R	DAL, SHA, TEP
RWR84#R759%&	0.759	7	S, W, N, Z	B, D	S	P, R	DAL, SHA, TEP
RWR84#R768%&	0.768	7	S, W, N, Z	B, D, F	S	P, R	DAL, SHA, TEP

RWR84#R776%&	0.776	7	S, W, N, Z	B, D	S	P, R	DAL, SHA, TEP
RWR84#R787%&	0.787	7	S, W, N, Z	B, D, F	S	P, R	DAL, SHA, TEP
RWR84#R796%&	0.796	7	S, W, N, Z	B, D	S	P, R	DAL, SHA, TEP
RWR84#R806%&	0.806	7	S, W, N, Z	B, D, F	S	P, R	DAL, SHA, TEP
RWR84#R816%&	0.816	7	S, W, N, Z	B, D	S	P, R	DAL, SHA, TEP
RWR84#R825%&	0.825	7	S, W, N, Z	B, D, F	S	P, R	DAL, SHA, TEP
RWR84#R835%&	0.835	7	S, W, N, Z	B, D	S	P, R	DAL, SHA, TEP
RWR84#R845%&	0.845	7	S, W, N, Z	B, D, F	S	P, R	DAL, SHA, TEP
RWR84#R856%&	0.856	7	S, W, N, Z	B, D	S	P, R	DAL, SHA, TEP
RWR84#R866%&	0.866	7	S, W, N, Z	B, D, F	S	P, R	DAL, SHA, TEP
RWR84#R876%&	0.876	7	S, W, N, Z	B, D	S	P, R	DAL, SHA, TEP
RWR84#R887%&	0.887	7	S, W, N, Z	B, D, F	S	P, R	DAL, SHA, TEP
RWR84#R898%&	0.898	7	S, W, N, Z	B, D	S	P, R	DAL, SHA, TEP
RWR84#R909%&	0.909	7	S, W, N, Z	B, D, F	S	P, R	DAL, SHA, TEP
RWR84#R920%&	0.920	7	S, W, N, Z	B, D	S	P, R	DAL, SHA, TEP
RWR84#R931%&	0.931	7	S, W, N, Z	B, D, F	S	P, R	DAL, SHA, TEP
RWR84#R942%&	0.942	7	S, W, N, Z	B, D	S	P, R	DAL, SHA, TEP
RWR84#R953%&	0.953	7	S, W, N, Z	B, D, F	S	P, R	DAL, SHA, TEP
RWR84#R965%&	0.965	7	S, W, N, Z	B, D	S	P, R	DAL, SHA, TEP
RWR84#R976%&	0.976	7	S, W, N, Z	B, D, F	S	P, R	DAL, SHA, TEP
RWR84#R988%&	0.988	7	S, W, N, Z	B, D	S	P, R	DAL, SHA, TEP
RWR84#1R00%&	1.00	7	S, W, N, Z	B, D, F	S	P, R	DAL, SHA, TEP
RWR84#1R01%&	1.01	7	S, W, N, Z	B, D	S	P, R	DAL, SHA, TEP
RWR84#1R02%&	1.02	7	S, W, N, Z	B, D, F	S	P, R	DAL, SHA, TEP
RWR84#1R04%&	1.04	7	S, W, N, Z	B, D	S	P, R	DAL, SHA, TEP
RWR84#1R05%&	1.05	7	S, W, N, Z	B, D, F	S	P, R	DAL, SHA, TEP
RWR84#1R06%&	1.06	7	S, W, N, Z	B, D	S	P, R	DAL, SHA, TEP
RWR84#1R07%&	1.07	7	S, W, N, Z	B, D, F	S	P, R	DAL, SHA, TEP
RWR84#1R09%&	1.09	7	S, W, N, Z	B, D	S	P, R	DAL, SHA, TEP
RWR84#1R10%&	1.10	7	S, W, N, Z	B, D, F	S	P, R	DAL, SHA, TEP
RWR84#1R11%&	1.11	7	S, W, N, Z	B, D	S	P, R	DAL, SHA, TEP
RWR84#1R13%&	1.13	7	S, W, N, Z	B, D, F	S	P, R	DAL, SHA, TEP
RWR84#1R14%&	1.14	7	S, W, N, Z	B, D	S	P, R	DAL, SHA, TEP
RWR84#1R15%&	1.15	7	S, W, N, Z	B, D, F	S	P, R	DAL, SHA, TEP
RWR84#1R17%&	1.17	7	S, W, N, Z	B, D	S	P, R	DAL, SHA, TEP
RWR84#1R18%&	1.18	7	S, W, N, Z	B, D, F	S	P, R	DAL, SHA, TEP
RWR84#1R20%&	1.20	7	S, W, N, Z	B, D	S	P, R	DAL, SHA, TEP
RWR84#1R21%&	1.21	7	S, W, N, Z	B, D, F	S	P, R	DAL, SHA, TEP
RWR84#1R23%&	1.23	7	S, W, N, Z	B, D	S	P, R	DAL, SHA, TEP
RWR84#1R24%&	1.24	7	S, W, N, Z	B, D, F	S	P, R	DAL, SHA, TEP
RWR84#1R26%&	1.26	7	S, W, N, Z	B, D	S	P, R	DAL, SHA, TEP
RWR84#1R27%&	1.27	7	S, W, N, Z	B, D, F	S	P, R	DAL, SHA, TEP
RWR84#1R29%&	1.29	7	S, W, N, Z	B, D	S	P, R	DAL, SHA, TEP
RWR84#1R30%&	1.30	7	S, W, N, Z	B, D, F	S	P, R	DAL, SHA, TEP
RWR84#1R32%&	1.32	7	S, W, N, Z	B, D	S	P, R	DAL, SHA, TEP
RWR84#1R33%&	1.33	7	S, W, N, Z	B, D, F	S	P, R	DAL, SHA, TEP
RWR84#1R35%&	1.35	7	S, W, N, Z	B, D	S	P, R	DAL, SHA, TEP

RWR84#1R37%&	1.37	7	S, W, N, Z	B, D, F	S	P, R	DAL, SHA, TEP
RWR84#1R38%&	1.38	7	S, W, N, Z	B, D	S	P, R	DAL, SHA, TEP
RWR84#1R40%&	1.40	7	S, W, N, Z	B, D, F	S	P, R	DAL, SHA, TEP
RWR84#1R42%&	1.42	7	S, W, N, Z	B, D	S	P, R	DAL, SHA, TEP
RWR84#1R43%&	1.43	7	S, W, N, Z	B, D, F	S	P, R	DAL, SHA, TEP
RWR84#1R45%&	1.45	7	S, W, N, Z	B, D	S	P, R	DAL, SHA, TEP
RWR84#1R47%&	1.47	7	S, W, N, Z	B, D, F	S	P, R	DAL, SHA, TEP
RWR84#1R49%&	1.49	7	S, W, N, Z	B, D	S	P, R	DAL, SHA, TEP
RWR84#1R50%&	1.50	7	S, W, N, Z	B, D, F	S	P, R	DAL, SHA, TEP
RWR84#1R52%&	1.52	7	S, W, N, Z	B, D	S	P, R	DAL, SHA, TEP
RWR84#1R54%&	1.54	7	S, W, N, Z	B, D, F	S	P, R	DAL, SHA, TEP
RWR84#1R56%&	1.56	7	S, W, N, Z	B, D	S	P, R	DAL, SHA, TEP
RWR84#1R58%&	1.58	7	S, W, N, Z	B, D, F	S	P, R	DAL, SHA, TEP
RWR84#1R60%&	1.60	7	S, W, N, Z	B, D	S	P, R	DAL, SHA, TEP
RWR84#1R62%&	1.62	7	S, W, N, Z	B, D, F	S	P, R	DAL, SHA, TEP
RWR84#1R64%&	1.64	7	S, W, N, Z	B, D	S	P, R	DAL, SHA, TEP
RWR84#1R65%&	1.65	7	S, W, N, Z	B, D, F	S	P, R	DAL, SHA, TEP
RWR84#1R67%&	1.67	7	S, W, N, Z	B, D	S	P, R	DAL, SHA, TEP
RWR84#1R69%&	1.69	7	S, W, N, Z	B, D, F	S	P, R	DAL, SHA, TEP
RWR84#1R72%&	1.72	7	S, W, N, Z	B, D	S	P, R	DAL, SHA, TEP
RWR84#1R74%&	1.74	7	S, W, N, Z	B, D, F	S	P, R	DAL, SHA, TEP
RWR84#1R76%&	1.76	7	S, W, N, Z	B, D	S	P, R	DAL, SHA, TEP
RWR84#1R78#&	1.78	7	S, W, N, Z	B, D, F	S	P, R	DAL, SHA, TEP
RWR84#1R80%&	1.80	7	S, W, N, Z	B, D, F	S	P, R	DAL, SHA, TEP
RWR84#1R82%&	1.82	7	S, W, N, Z	B, D, F	S	P, R	DAL, SHA, TEP
RWR84#1R84%&	1.84	7	S, W, N, Z	B, D	S	P, R	DAL, SHA, TEP
RWR84#1R87%&	1.87	7	S, W, N, Z	B, D, F	S	P, R	DAL, SHA, TEP
RWR84#1R89%&	1.89	7	S, W, N, Z	B, D	S	P, R	DAL, SHA, TEP
RWR84#1R91%&	1.91	7	S, W, N, Z	B, D, F	S	P, R	DAL, SHA, TEP
RWR84#1R93%&	1.93	7	S, W, N, Z	B, D	S	P, R	DAL, SHA, TEP
RWR84#1R96%&	1.96	7	S, W, N, Z	B, D, F	S	P, R	DAL, SHA, TEP
RWR84#1R98%&	1.98	7	S, W, N, Z	B, D	S	P, R	DAL, SHA, TEP
RWR84#2R00%&	2.00	7	S, W, N, Z	B, D, F	S	P, R	DAL, SHA, TEP
RWR84#2R03%&	2.03	7	S, W, N, Z	B, D	S	P, R	DAL, SHA, TEP
RWR84#2R05%&	2.05	7	S, W, N, Z	B, D, F	S	P, R	DAL, SHA, TEP
RWR84#2R08%&	2.08	7	S, W, N, Z	B, D	S	P, R	DAL, SHA, TEP
RWR84#2R10%&	2.10	7	S, W, N, Z	B, D, F	S	P, R	DAL, SHA, TEP
RWR84#2R13%&	2.13	7	S, W, N, Z	B, D	S	P, R	DAL, SHA, TEP
RWR84#2R15%&	2.15	7	S, W, N, Z	B, D, F	S	P, R	DAL, SHA, TEP
RWR84#2R18%&	2.18	7	S, W, N, Z	B, D	S	P, R	DAL, SHA, TEP
RWR84#2R21%&	2.21	7	S, W, N, Z	B, D, F	S	P, R	DAL, SHA, TEP
RWR84#2R23%&	2.23	7	S, W, N, Z	B, D	S	P, R	DAL, SHA, TEP
RWR84#2R26%&	2.26	7	S, W, N, Z	B, D, F	S	P, R	DAL, SHA, TEP
RWR84#2R29%&	2.29	7	S, W, N, Z	B, D	S	P, R	DAL, SHA, TEP
RWR84#2R32%&	2.32	7	S, W, N, Z	B, D, F	S	P, R	DAL, SHA, TEP
RWR84#2R34%&	2.34	7	S, W, N, Z	B, D	S	P, R	DAL, SHA, TEP
RWR84#2R37%&	2.37	7	S, W, N, Z	B, D, F	S	P, R	DAL, SHA, TEP

RWR84#2R40%&	2.40	7	S, W, N, Z	B, D	S	P, R	DAL, SHA, TEP
RWR84#2R43%&	2.43	7	S, W, N, Z	B, D, F	S	P, R	DAL, SHA, TEP
RWR84#2R46%&	2.46	7	S, W, N, Z	B, D	S	P, R	DAL, SHA, TEP
RWR84#2R49%&	2.49	7	S, W, N, Z	B, D, F	S	P, R	DAL, SHA, TEP
RWR84#2R52%&	2.52	7	S, W, N, Z	B, D	S	P, R	DAL, SHA, TEP
RWR84#2R55%&	2.55	7	S, W, N, Z	B, D, F	S	P, R	DAL, SHA, TEP
RWR84#2R58%&	2.58	7	S, W, N, Z	B, D	S	P, R	DAL, SHA, TEP
RWR84#2R61%&	2.61	7	S, W, N, Z	B, D, F	S	P, R	DAL, SHA, TEP
RWR84#2R64%&	2.64	7	S, W, N, Z	B, D	S	P, R	DAL, SHA, TEP
RWR84#2R67%&	2.67	7	S, W, N, Z	B, D, F	S	P, R	DAL, SHA, TEP
RWR84#2R71%&	2.71	7	S, W, N, Z	B, D	S	P, R	DAL, SHA, TEP
RWR84#2R74%&	2.74	7	S, W, N, Z	B, D, F	S	P, R	DAL, SHA, TEP
RWR84#2R77%&	2.77	7	S, W, N, Z	B, D	S	P, R	DAL, SHA, TEP
RWR84#2R80%&	2.80	7	S, W, N, Z	B, D, F	S	P, R	DAL, SHA, TEP
RWR84#2R84%&	2.84	7	S, W, N, Z	B, D	S	P, R	DAL, SHA, TEP
RWR84#2R87%&	2.87	7	S, W, N, Z	B, D, F	S	P, R	DAL, SHA, TEP
RWR84#2R91%&	2.91	7	S, W, N, Z	B, D	S	P, R	DAL, SHA, TEP
RWR84#2R94%&	2.94	7	S, W, N, Z	B, D, F	S	P, R	DAL, SHA, TEP
RWR84#2R98%&	2.98	7	S, W, N, Z	B, D	S	P, R	DAL, SHA, TEP
RWR84#3R01%&	3.01	7	S, W, N, Z	B, D, F	S	P, R	DAL, SHA, TEP
RWR84#3R05%&	3.05	7	S, W, N, Z	B, D	S	P, R	DAL, SHA, TEP
RWR84#3R09%&	3.09	7	S, W, N, Z	B, D, F	S	P, R	DAL, SHA, TEP
RWR84#3R12%&	3.12	7	S, W, N, Z	B, D	S	P, R	DAL, SHA, TEP
RWR84#3R16%&	3.16	7	S, W, N, Z	B, D, F	S	P, R	DAL, SHA, TEP
RWR84#3R20%&	3.20	7	S, W, N, Z	B, D	S	P, R	DAL, SHA, TEP
RWR84#3R24%&	3.24	7	S, W, N, Z	B, D, F	S	P, R	DAL, SHA, TEP
RWR84#3R28%&	3.28	7	S, W, N, Z	B, D	S	P, R	DAL, SHA, TEP
RWR84#3R32%&	3.32	7	S, W, N, Z	B, D, F	S	P, R	DAL, SHA, TEP
RWR84#3R36%&	3.36	7	S, W, N, Z	B, D	S	P, R	DAL, SHA, TEP
RWR84#3R40%&	3.40	7	S, W, N, Z	B, D, F	S	P, R	DAL, SHA, TEP
RWR84#3R44%&	3.44	7	S, W, N, Z	B, D	S	P, R	DAL, SHA, TEP
RWR84#3R48%&	3.48	7	S, W, N, Z	B, D, F	S	P, R	DAL, SHA, TEP
RWR84#3R52%&	3.52	7	S, W, N, Z	B, D	S	P, R	DAL, SHA, TEP
RWR84#3R57%&	3.57	7	S, W, N, Z	B, D, F	S	P, R	DAL, SHA, TEP
RWR84#3R61%&	3.61	7	S, W, N, Z	B, D	S	P, R	DAL, SHA, TEP
RWR84#3R65%&	3.65	7	S, W, N, Z	B, D, F	S	P, R	DAL, SHA, TEP
RWR84#3R70%&	3.70	7	S, W, N, Z	B, D	S	P, R	DAL, SHA, TEP
RWR84#3R74%&	3.74	7	S, W, N, Z	B, D, F	S	P, R	DAL, SHA, TEP
RWR84#3R79%&	3.79	7	S, W, N, Z	B, D	S	P, R	DAL, SHA, TEP
RWR84#3R83%&	3.83	7	S, W, N, Z	B, D, F	S	P, R	DAL, SHA, TEP
RWR84#3R88%&	3.88	7	S, W, N, Z	B, D	S	P, R	DAL, SHA, TEP
RWR84#3R92%&	3.92	7	S, W, N, Z	B, D, F	S	P, R	DAL, SHA, TEP
RWR84#3R97%&	3.97	7	S, W, N, Z	B, D	S	P, R	DAL, SHA, TEP
RWR84#4R02%&	4.02	7	S, W, N, Z	B, D, F	S	P, R	DAL, SHA, TEP
RWR84#4R07%&	4.07	7	S, W, N, Z	B, D	S	P, R	DAL, SHA, TEP
RWR84#4R12%&	4.12	7	S, W, N, Z	B, D, F	S	P, R	DAL, SHA, TEP
RWR84#4R17%&	4.17	7	S, W, N, Z	B, D	S	P, R	DAL, SHA, TEP

RWR84#4R22%&	4.22	7	S, W, N, Z	B, D, F	S	P, R	DAL, SHA, TEP
RWR84#4R27%&	4.27	7	S, W, N, Z	B, D	S	P, R	DAL, SHA, TEP
RWR84#4R32%&	4.32	7	S, W, N, Z	B, D, F	S	P, R	DAL, SHA, TEP
RWR84#4R37%&	4.37	7	S, W, N, Z	B, D	S	P, R	DAL, SHA, TEP
RWR84#4R42%&	4.42	7	S, W, N, Z	B, D, F	S	P, R	DAL, SHA, TEP
RWR84#4R48%&	4.48	7	S, W, N, Z	B, D	S	P, R	DAL, SHA, TEP
RWR84#4R53%&	4.53	7	S, W, N, Z	B, D, F	S	P, R	DAL, SHA, TEP
RWR84#4R59%&	4.59	7	S, W, N, Z	B, D	S	P, R	DAL, SHA, TEP
RWR84#4R64%&	4.64	7	S, W, N, Z	B, D, F	S	P, R	DAL, SHA, TEP
RWR84#4R70%&	4.70	7	S, W, N, Z	B, D	S	P, R	DAL, SHA, TEP
RWR84#4R75%&	4.75	7	S, W, N, Z	B, D, F	S	P, R	DAL, SHA, TEP
RWR84#4R81%&	4.81	7	S, W, N, Z	B, D	S	P, R	DAL, SHA, TEP
RWR84#4R87%&	4.87	7	S, W, N, Z	B, D, F	S	P, R	DAL, SHA, TEP
RWR84#4R93%&	4.93	7	S, W, N, Z	B, D	S	P, R	DAL, SHA, TEP
RWR84#4R99%&	4.99	7	S, W, N, Z	B, D, F	S	P, R	DAL, SHA, TEP
RWR84#5R05%&	5.05	7	S, W, N, Z	B, D	S	P, R	DAL, SHA, TEP
RWR84#5R11%&	5.11	7	S, W, N, Z	B, D, F	S	P, R	DAL, SHA, TEP
RWR84#5R17%&	5.17	7	S, W, N, Z	B, D	S	P, R	DAL, SHA, TEP
RWR84#5R23%&	5.23	7	S, W, N, Z	B, D, F	S	P, R	DAL, SHA, TEP
RWR84#5R30%&	5.30	7	S, W, N, Z	B, D	S	P, R	DAL, SHA, TEP
RWR84#5R36%&	5.36	7	S, W, N, Z	B, D, F	S	P, R	DAL, SHA, TEP
RWR84#5R42%&	5.42	7	S, W, N, Z	B, D	S	P, R	DAL, SHA, TEP
RWR84#5R49%&	5.49	7	S, W, N, Z	B, D, F	S	P, R	DAL, SHA, TEP
RWR84#5R56%&	5.56	7	S, W, N, Z	B, D	S	P, R	DAL, SHA, TEP
RWR84#5R62%&	5.62	7	S, W, N, Z	B, D, F	S	P, R	DAL, SHA, TEP
RWR84#5R69%&	5.69	7	S, W, N, Z	B, D	S	P, R	DAL, SHA, TEP
RWR84#5R76%&	5.76	7	S, W, N, Z	B, D, F	S	P, R	DAL, SHA, TEP
RWR84#5R83%&	5.83	7	S, W, N, Z	B, D	S	P, R	DAL, SHA, TEP
RWR84#5R90%&	5.90	7	S, W, N, Z	B, D, F	S	P, R	DAL, SHA, TEP
RWR84#5R97%&	5.97	7	S, W, N, Z	B, D	S	P, R	DAL, SHA, TEP
RWR84#6R04%&	6.04	7	S, W, N, Z	B, D, F	S	P, R	DAL, SHA, TEP
RWR84#6R12%&	6.12	7	S, W, N, Z	B, D	S	P, R	DAL, SHA, TEP
RWR84#6R19%&	6.19	7	S, W, N, Z	B, D, F	S	P, R	DAL, SHA, TEP
RWR84#6R26%&	6.26	7	S, W, N, Z	B, D	S	P, R	DAL, SHA, TEP
RWR84#6R34%&	6.34	7	S, W, N, Z	B, D, F	S	P, R	DAL, SHA, TEP
RWR84#6R42%&	6.42	7	S, W, N, Z	B, D	S	P, R	DAL, SHA, TEP
RWR84#6R49%&	6.49	7	S, W, N, Z	B, D, F	S	P, R	DAL, SHA, TEP
RWR84#6R57%&	6.57	7	S, W, N, Z	B, D	S	P, R	DAL, SHA, TEP
RWR84#6R65%&	6.65	7	S, W, N, Z	B, D, F	S	P, R	DAL, SHA, TEP
RWR84#6R73%&	6.73	7	S, W, N, Z	B, D	S	P, R	DAL, SHA, TEP
RWR84#6R81%&	6.81	7	S, W, N, Z	B, D, F	S	P, R	DAL, SHA, TEP
RWR84#6R90%&	6.90	7	S, W, N, Z	B, D	S	P, R	DAL, SHA, TEP
RWR84#6R98%&	6.98	7	S, W, N, Z	B, D, F	S	P, R	DAL, SHA, TEP
RWR84#7R06%&	7.06	7	S, W, N, Z	B, D	S	P, R	DAL, SHA, TEP
RWR84#7R15%&	7.15	7	S, W, N, Z	B, D, F	S	P, R	DAL, SHA, TEP
RWR84#7R23%&	7.23	7	S, W, N, Z	B, D	S	P, R	DAL, SHA, TEP
RWR84#7R32%&	7.32	7	S, W, N, Z	B, D, F	S	P, R	DAL, SHA, TEP

RWR84#7R41%&	7.41	7	S, W, N, Z	B, D	S	P, R	DAL, SHA, TEP
RWR84#7R50%&	7.50	7	S, W, N, Z	B, D, F	S	P, R	DAL, SHA, TEP
RWR84#7R59%&	7.59	7	S, W, N, Z	B, D	S	P, R	DAL, SHA, TEP
RWR84#7R68%&	7.68	7	S, W, N, Z	B, D, F	S	P, R	DAL, SHA, TEP
RWR84#7R77%&	7.77	7	S, W, N, Z	B, D	S	P, R	DAL, SHA, TEP
RWR84#7R87%&	7.87	7	S, W, N, Z	B, D, F	S	P, R	DAL, SHA, TEP
RWR84#7R96%&	7.96	7	S, W, N, Z	B, D	S	P, R	DAL, SHA, TEP
RWR84#8R06%&	8.06	7	S, W, N, Z	B, D, F	S	P, R	DAL, SHA, TEP
RWR84#8R16%&	8.16	7	S, W, N, Z	B, D	S	P, R	DAL, SHA, TEP
RWR84#8R25%&	8.25	7	S, W, N, Z	B, D, F	S	P, R	DAL, SHA, TEP
RWR84#8R35%&	8.35	7	S, W, N, Z	B, D	S	P, R	DAL, SHA, TEP
RWR84#8R45%&	8.45	7	S, W, N, Z	B, D, F	S	P, R	DAL, SHA, TEP
RWR84#8R56%&	8.56	7	S, W, N, Z	B, D	S	P, R	DAL, SHA, TEP
RWR84#8R66%&	8.66	7	S, W, N, Z	B, D, F	S	P, R	DAL, SHA, TEP
RWR84#8R76%&	8.76	7	S, W, N, Z	B, D	S	P, R	DAL, SHA, TEP
RWR84#8R87%&	8.87	7	S, W, N, Z	B, D, F	S	P, R	DAL, SHA, TEP
RWR84#8R98%&	8.98	7	S, W, N, Z	B, D	S	P, R	DAL, SHA, TEP
RWR84#9R09%&	9.09	7	S, W, N, Z	B, D, F	S	P, R	DAL, SHA, TEP
RWR84#9R20%&	9.20	7	S, W, N, Z	B, D	S	P, R	DAL, SHA, TEP
RWR84#9R31%&	9.31	7	S, W, N, Z	B, D, F	S	P, R	DAL, SHA, TEP
RWR84#9R42%&	9.42	7	S, W, N, Z	B, D	S	P, R	DAL, SHA, TEP
RWR84#9R53%&	9.53	7	S, W, N, Z	B, D, F	S	P, R	DAL, SHA, TEP
RWR84#9R65%&	9.65	7	S, W, N, Z	B, D	S	P, R	DAL, SHA, TEP
RWR84#9R76%&	9.76	7	S, W, N, Z	B, D, F	S	P, R	DAL, SHA, TEP
RWR84#9R88%&	9.88	7	S, W, N, Z	B, D	S	P, R	DAL, SHA, TEP
RWR84#10R0%&	10.0	7	S, W, N, Z	B, D, F	S	P, R	DAL, SHA, TEP
RWR84#10R1%&	10.1	7	S, W, N, Z	B, D	S	P, R	DAL, SHA, TEP
RWR84#10R2%&	10.2	7	S, W, N, Z	B, D, F	S	P, R	DAL, SHA, TEP
RWR84#10R4%&	10.4	7	S, W, N, Z	B, D	S	P, R	DAL, SHA, TEP
RWR84#10R5%&	10.5	7	S, W, N, Z	B, D, F	S	P, R	DAL, SHA, TEP
RWR84#10R6%&	10.6	7	S, W, N, Z	B, D	S	P, R	DAL, SHA, TEP
RWR84#10R7%&	10.7	7	S, W, N, Z	B, D, F	S	P, R	DAL, SHA, TEP
RWR84#10R9%&	10.9	7	S, W, N, Z	B, D	S	P, R	DAL, SHA, TEP
RWR84#11R0%&	11.0	7	S, W, N, Z	B, D, F	S	P, R	DAL, SHA, TEP
RWR84#11R1%&	11.1	7	S, W, N, Z	B, D	S	P, R	DAL, SHA, TEP
RWR84#11R3%&	11.3	7	S, W, N, Z	B, D, F	S	P, R	DAL, SHA, TEP
RWR84#11R4%&	11.4	7	S, W, N, Z	B, D	S	P, R	DAL, SHA, TEP
RWR84#11R5%&	11.5	7	S, W, N, Z	B, D, F	S	P, R	DAL, SHA, TEP
RWR84#11R7%&	11.7	7	S, W, N, Z	B, D	S	P, R	DAL, SHA, TEP
RWR84#11R8%&	11.8	7	S, W, N, Z	B, D, F	S	P, R	DAL, SHA, TEP
RWR84#12R0%&	12.0	7	S, W, N, Z	B, D	S	P, R	DAL, SHA, TEP
RWR84#12R1%&	12.1	7	S, W, N, Z	B, D, F	S	P, R	DAL, SHA, TEP
RWR84#12R3%&	12.3	7	S, W, N, Z	B, D	S	P, R	DAL, SHA, TEP
RWR84#12R4%&	12.4	7	S, W, N, Z	B, D, F	S	P, R	DAL, SHA, TEP
RWR84#12R6%&	12.6	7	S, W, N, Z	B, D	S	P, R	DAL, SHA, TEP
RWR84#12R7%&	12.7	7	S, W, N, Z	B, D, F	S	P, R	DAL, SHA, TEP
RWR84#12R9%&	12.9	7	S, W, N, Z	B, D	S	P, R	DAL, SHA, TEP

RWR84#13R0%&	13.0	7	S, W, N, Z	B, D, F	S	P, R	DAL, SHA, TEP
RWR84#13R2%&	13.2	7	S, W, N, Z	B, D	S	P, R	DAL, SHA, TEP
RWR84#13R3%&	13.3	7	S, W, N, Z	B, D, F	S	P, R	DAL, SHA, TEP
RWR84#13R5%&	13.5	7	S, W, N, Z	B, D	S	P, R	DAL, SHA, TEP
RWR84#13R7%&	13.7	7	S, W, N, Z	B, D, F	S	P, R	DAL, SHA, TEP
RWR84#13R8%&	13.8	7	S, W, N, Z	B, D	S	P, R	DAL, SHA, TEP
RWR84#14R0%&	14.0	7	S, W, N, Z	B, D, F	S	P, R	DAL, SHA, TEP
RWR84#14R2%&	14.2	7	S, W, N, Z	B, D	S	P, R	DAL, SHA, TEP
RWR84#14R3%&	14.3	7	S, W, N, Z	B, D, F	S	P, R	DAL, SHA, TEP
RWR84#14R5%&	14.5	7	S, W, N, Z	B, D	S	P, R	DAL, SHA, TEP
RWR84#14R7%&	14.7	7	S, W, N, Z	B, D, F	S	P, R	DAL, SHA, TEP
RWR84#14R9%&	14.9	7	S, W, N, Z	B, D	S	P, R	DAL, SHA, TEP
RWR84#15R0%&	15.0	7	S, W, N, Z	B, D, F	S	P, R	DAL, SHA, TEP
RWR84#15R2%&	15.2	7	S, W, N, Z	B, D	S	P, R	DAL, SHA, TEP
RWR84#15R4%&	15.4	7	S, W, N, Z	B, D, F	S	P, R	DAL, SHA, TEP
RWR84#15R6%&	15.6	7	S, W, N, Z	B, D	S	P, R	DAL, SHA, TEP
RWR84#15R8%&	15.8	7	S, W, N, Z	B, D, F	S	P, R	DAL, SHA, TEP
RWR84#16R0%&	16.0	7	S, W, N, Z	B, D	S	P, R	DAL, SHA, TEP
RWR84#16R2%&	16.2	7	S, W, N, Z	B, D, F	S	P, R	DAL, SHA, TEP
RWR84#16R4%&	16.4	7	S, W, N, Z	B, D	S	P, R	DAL, SHA, TEP
RWR84#16R5%&	16.5	7	S, W, N, Z	B, D, F	S	P, R	DAL, SHA, TEP
RWR84#16R7%&	16.7	7	S, W, N, Z	B, D	S	P, R	DAL, SHA, TEP
RWR84#16R9%&	16.9	7	S, W, N, Z	B, D, F	S	P, R	DAL, SHA, TEP
RWR84#17R2%&	17.2	7	S, W, N, Z	B, D	S	P, R	DAL, SHA, TEP
RWR84#17R4%&	17.4	7	S, W, N, Z	B, D, F	S	P, R	DAL, SHA, TEP
RWR84#17R6%&	17.6	7	S, W, N, Z	B, D	S	P, R	DAL, SHA, TEP
RWR84#17R8%&	17.8	7	S, W, N, Z	B, D, F	S	P, R	DAL, SHA, TEP
RWR84#18R0%&	18.0	7	S, W, N, Z	B, D, F	S	P, R	DAL, SHA, TEP
RWR84#18R2%&	18.2	7	S, W, N, Z	B, D, F	S	P, R	DAL, SHA, TEP
RWR84#18R4%&	18.4	7	S, W, N, Z	B, D	S	P, R	DAL, SHA, TEP
RWR84#18R7%&	18.7	7	S, W, N, Z	B, D, F	S	P, R	DAL, SHA, TEP
RWR84#18R9%&	18.9	7	S, W, N, Z	B, D	S	P, R	DAL, SHA, TEP
RWR84#19R1%&	19.1	7	S, W, N, Z	B, D, F	S	P, R	DAL, SHA, TEP
RWR84#19R3%&	19.3	7	S, W, N, Z	B, D	S	P, R	DAL, SHA, TEP
RWR84#19R6%&	19.6	7	S, W, N, Z	B, D, F	S	P, R	DAL, SHA, TEP
RWR84#19R8%&	19.8	7	S, W, N, Z	B, D	S	P, R	DAL, SHA, TEP
RWR84#20R0%&	20.0	7	S, W, N, Z	B, D, F	S	P, R	DAL, SHA, TEP
RWR84#20R3%&	20.3	7	S, W, N, Z	B, D	S	P, R	DAL, SHA, TEP
RWR84#20R5%&	20.5	7	S, W, N, Z	B, D, F	S	P, R	DAL, SHA, TEP
RWR84#20R8%&	20.8	7	S, W, N, Z	B, D	S	P, R	DAL, SHA, TEP
RWR84#21R0%&	21.0	7	S, W, N, Z	B, D, F	S	P, R	DAL, SHA, TEP
RWR84#21R3%&	21.3	7	S, W, N, Z	B, D	S	P, R	DAL, SHA, TEP
RWR84#21R5%&	21.5	7	S, W, N, Z	B, D, F	S	P, R	DAL, SHA, TEP
RWR84#21R8%&	21.8	7	S, W, N, Z	B, D	S	P, R	DAL, SHA, TEP
RWR84#22R1%&	22.1	7	S, W, N, Z	B, D, F	S	P, R	DAL, SHA, TEP
RWR84#22R3%&	22.3	7	S, W, N, Z	B, D	S	P, R	DAL, SHA, TEP
RWR84#22R6%&	22.6	7	S, W, N, Z	B, D, F	S	P, R	DAL, SHA, TEP

RWR84#22R9%&	22.9	7	S, W, N, Z	B, D	S	P, R	DAL, SHA, TEP
RWR84#23R2%&	23.2	7	S, W, N, Z	B, D, F	S	P, R	DAL, SHA, TEP
RWR84#23R4%&	23.4	7	S, W, N, Z	B, D	S	P, R	DAL, SHA, TEP
RWR84#23R7%&	23.7	7	S, W, N, Z	B, D, F	S	P, R	DAL, SHA, TEP
RWR84#24R0%&	24.0	7	S, W, N, Z	B, D	S	P, R	DAL, SHA, TEP
RWR84#24R3%&	24.3	7	S, W, N, Z	B, D, F	S	P, R	DAL, SHA, TEP
RWR84#24R6%&	24.6	7	S, W, N, Z	B, D	S	P, R	DAL, SHA, TEP
RWR84#24R9%&	24.9	7	S, W, N, Z	B, D, F	S	P, R	DAL, SHA, TEP
RWR84#25R2%&	25.2	7	S, W, N, Z	B, D	S	P, R	DAL, SHA, TEP
RWR84#25R5%&	25.5	7	S, W, N, Z	B, D, F	S	P, R	DAL, SHA, TEP
RWR84#25R8%&	25.8	7	S, W, N, Z	B, D	S	P, R	DAL, SHA, TEP
RWR84#26R1%&	26.1	7	S, W, N, Z	B, D, F	S	P, R	DAL, SHA, TEP
RWR84#26R4%&	26.4	7	S, W, N, Z	B, D	S	P, R	DAL, SHA, TEP
RWR84#26R7%&	26.7	7	S, W, N, Z	B, D, F	S	P, R	DAL, SHA, TEP
RWR84#27R1%&	27.1	7	S, W, N, Z	B, D	S	P, R	DAL, SHA, TEP
RWR84#27R4%&	27.4	7	S, W, N, Z	B, D, F	S	P, R	DAL, SHA, TEP
RWR84#27R7%&	27.7	7	S, W, N, Z	B, D	S	P, R	DAL, SHA, TEP
RWR84#28R0%&	28.0	7	S, W, N, Z	B, D, F	S	P, R	DAL, SHA, TEP
RWR84#28R4%&	28.4	7	S, W, N, Z	B, D	S	P, R	DAL, SHA, TEP
RWR84#28R7%&	28.7	7	S, W, N, Z	B, D, F	S	P, R	DAL, SHA, TEP
RWR84#29R1%&	29.1	7	S, W, N, Z	B, D	S	P, R	DAL, SHA, TEP
RWR84#29R4%&	29.4	7	S, W, N, Z	B, D, F	S	P, R	DAL, SHA, TEP
RWR84#29R8%&	29.8	7	S, W, N, Z	B, D	S	P, R	DAL, SHA, TEP
RWR84#30R1%&	30.1	7	S, W, N, Z	B, D, F	S	P, R	DAL, SHA, TEP
RWR84#30R5%&	30.5	7	S, W, N, Z	B, D	S	P, R	DAL, SHA, TEP
RWR84#30R9%&	30.9	7	S, W, N, Z	B, D, F	S	P, R	DAL, SHA, TEP
RWR84#31R2%&	31.2	7	S, W, N, Z	B, D	S	P, R	DAL, SHA, TEP
RWR84#31R6%&	31.6	7	S, W, N, Z	B, D, F	S	P, R	DAL, SHA, TEP
RWR84#32R0%&	32.0	7	S, W, N, Z	B, D	S	P, R	DAL, SHA, TEP
RWR84#32R4%&	32.4	7	S, W, N, Z	B, D, F	S	P, R	DAL, SHA, TEP
RWR84#32R8%&	32.8	7	S, W, N, Z	B, D	S	P, R	DAL, SHA, TEP
RWR84#33R2%&	33.2	7	S, W, N, Z	B, D, F	S	P, R	DAL, SHA, TEP
RWR84#33R6%&	33.6	7	S, W, N, Z	B, D	S	P, R	DAL, SHA, TEP
RWR84#34R0%&	34.0	7	S, W, N, Z	B, D, F	S	P, R	DAL, SHA, TEP
RWR84#34R4%&	34.4	7	S, W, N, Z	B, D	S	P, R	DAL, SHA, TEP
RWR84#34R8%&	34.8	7	S, W, N, Z	B, D, F	S	P, R	DAL, SHA, TEP
RWR84#35R2%&	35.2	7	S, W, N, Z	B, D	S	P, R	DAL, SHA, TEP
RWR84#35R7%&	35.7	7	S, W, N, Z	B, D, F	S	P, R	DAL, SHA, TEP
RWR84#36R1%&	36.1	7	S, W, N, Z	B, D	S	P, R	DAL, SHA, TEP
RWR84#36R5%&	36.5	7	S, W, N, Z	B, D, F	S	P, R	DAL, SHA, TEP
RWR84#37R0%&	37.0	7	S, W, N, Z	B, D	S	P, R	DAL, SHA, TEP
RWR84#37R4%&	37.4	7	S, W, N, Z	B, D, F	S	P, R	DAL, SHA, TEP
RWR84#37R9%&	37.9	7	S, W, N, Z	B, D	S	P, R	DAL, SHA, TEP
RWR84#38R3%&	38.3	7	S, W, N, Z	B, D, F	S	P, R	DAL, SHA, TEP
RWR84#38R8%&	38.8	7	S, W, N, Z	B, D	S	P, R	DAL, SHA, TEP
RWR84#39R2%&	39.2	7	S, W, N, Z	B, D, F	S	P, R	DAL, SHA, TEP
RWR84#39R7%&	39.7	7	S, W, N, Z	B, D	S	P, R	DAL, SHA, TEP

RWR84#40R2%&	40.2	7	S, W, N, Z	B, D, F	S	P, R	DAL, SHA, TEP
RWR84#40R7%&	40.7	7	S, W, N, Z	B, D	S	P, R	DAL, SHA, TEP
RWR84#41R2%&	41.2	7	S, W, N, Z	B, D, F	S	P, R	DAL, SHA, TEP
RWR84#41R7%&	41.7	7	S, W, N, Z	B, D	S	P, R	DAL, SHA, TEP
RWR84#42R2%&	42.2	7	S, W, N, Z	B, D, F	S	P, R	DAL, SHA, TEP
RWR84#42R7%&	42.7	7	S, W, N, Z	B, D	S	P, R	DAL, SHA, TEP
RWR84#43R2%&	43.2	7	S, W, N, Z	B, D, F	S	P, R	DAL, SHA, TEP
RWR84#43R7%&	43.7	7	S, W, N, Z	B, D	S	P, R	DAL, SHA, TEP
RWR84#44R2%&	44.2	7	S, W, N, Z	B, D, F	S	P, R	DAL, SHA, TEP
RWR84#44R8%&	44.8	7	S, W, N, Z	B, D	S	P, R	DAL, SHA, TEP
RWR84#45R3%&	45.3	7	S, W, N, Z	B, D, F	S	P, R	DAL, SHA, TEP
RWR84#45R9%&	45.9	7	S, W, N, Z	B, D	S	P, R	DAL, SHA, TEP
RWR84#46R4%&	46.4	7	S, W, N, Z	B, D, F	S	P, R	DAL, SHA, TEP
RWR84#47R0%&	47.0	7	S, W, N, Z	B, D	S	P, R	DAL, SHA, TEP
RWR84#47R5%&	47.5	7	S, W, N, Z	B, D, F	S	P, R	DAL, SHA, TEP
RWR84#48R1%&	48.1	7	S, W, N, Z	B, D	S	P, R	DAL, SHA, TEP
RWR84#48R7%&	48.7	7	S, W, N, Z	B, D, F	S	P, R	DAL, SHA, TEP
RWR84#49R3%&	49.3	7	S, W, N, Z	B, D	S	P, R	DAL, SHA, TEP
RWR84#49R9%&	49.9	7	S, W, N, Z	B, D, F	S	P, R	DAL, SHA, TEP
RWR84#50R5%&	50.5	7	S, W, N, Z	B, D	S	P, R	DAL, SHA, TEP
RWR84#51R1%&	51.1	7	S, W, N, Z	B, D, F	S	P, R	DAL, SHA, TEP
RWR84#51R7%&	51.7	7	S, W, N, Z	B, D	S	P, R	DAL, SHA, TEP
RWR84#52R3%&	52.3	7	S, W, N, Z	B, D, F	S	P, R	DAL, SHA, TEP
RWR84#53R0%&	53.0	7	S, W, N, Z	B, D	S	P, R	DAL, SHA, TEP
RWR84#53R6%&	53.6	7	S, W, N, Z	B, D, F	S	P, R	DAL, SHA, TEP
RWR84#54R2%&	54.2	7	S, W, N, Z	B, D	S	P, R	DAL, SHA, TEP
RWR84#54R9%&	54.9	7	S, W, N, Z	B, D, F	S	P, R	DAL, SHA, TEP
RWR84#55R6%&	55.6	7	S, W, N, Z	B, D	S	P, R	DAL, SHA, TEP
RWR84#56R2%&	56.2	7	S, W, N, Z	B, D, F	S	P, R	DAL, SHA, TEP
RWR84#56R9%&	56.9	7	S, W, N, Z	B, D	S	P, R	DAL, SHA, TEP
RWR84#57R6%&	57.6	7	S, W, N, Z	B, D, F	S	P, R	DAL, SHA, TEP
RWR84#58R3%&	58.3	7	S, W, N, Z	B, D	S	P, R	DAL, SHA, TEP
RWR84#59R0%&	59.0	7	S, W, N, Z	B, D, F	S	P, R	DAL, SHA, TEP
RWR84#59R7%&	59.7	7	S, W, N, Z	B, D	S	P, R	DAL, SHA, TEP
RWR84#60R4%&	60.4	7	S, W, N, Z	B, D, F	S	P, R	DAL, SHA, TEP
RWR84#61R2%&	61.2	7	S, W, N, Z	B, D	S	P, R	DAL, SHA, TEP
RWR84#61R9%&	61.9	7	S, W, N, Z	B, D, F	S	P, R	DAL, SHA, TEP
RWR84#62R6%&	62.6	7	S, W, N, Z	B, D	S	P, R	DAL, SHA, TEP
RWR84#63R4%&	63.4	7	S, W, N, Z	B, D, F	S	P, R	DAL, SHA, TEP
RWR84#64R2%&	64.2	7	S, W, N, Z	B, D	S	P, R	DAL, SHA, TEP
RWR84#64R9%&	64.9	7	S, W, N, Z	B, D, F	S	P, R	DAL, SHA, TEP
RWR84#65R7%&	65.7	7	S, W, N, Z	B, D	S	P, R	DAL, SHA, TEP
RWR84#66R5%&	66.5	7	S, W, N, Z	B, D, F	S	P, R	DAL, SHA, TEP
RWR84#67R3%&	67.3	7	S, W, N, Z	B, D	S	P, R	DAL, SHA, TEP
RWR84#68R1%&	68.1	7	S, W, N, Z	B, D, F	S	P, R	DAL, SHA, TEP
RWR84#69R0%&	69.0	7	S, W, N, Z	B, D	S	P, R	DAL, SHA, TEP
RWR84#69R8%&	69.8	7	S, W, N, Z	B, D, F	S	P, R	DAL, SHA, TEP

RWR84#70R6%&	70.6	7	S, W, N, Z	B, D	S	P, R	DAL, SHA, TEP
RWR84#71R5%&	71.5	7	S, W, N, Z	B, D, F	S	P, R	DAL, SHA, TEP
RWR84#72R3%&	72.3	7	S, W, N, Z	B, D	S	P, R	DAL, SHA, TEP
RWR84#73R2%&	73.2	7	S, W, N, Z	B, D, F	S	P, R	DAL, SHA, TEP
RWR84#74R1%&	74.1	7	S, W, N, Z	B, D	S	P, R	DAL, SHA, TEP
RWR84#75R0%&	75.0	7	S, W, N, Z	B, D, F	S	P, R	DAL, SHA, TEP
RWR84#75R9%&	75.9	7	S, W, N, Z	B, D	S	P, R	DAL, SHA, TEP
RWR84#76R8%&.	76.8	7	S, W, N, Z	B, D, F	S	P, R	DAL, SHA, TEP
RWR84#77R7%&.	77.7	7	S, W, N, Z	B, D	S	P, R	DAL, SHA, TEP
RWR84#78R7%&	78.7	7	S, W, N, Z	B, D, F	S	P, R	DAL, SHA, TEP
RWR84#79R6%&	79.6	7	S, W, N, Z	B, D	S	P, R	DAL, SHA, TEP
RWR84#80R6%&	80.6	7	S, W, N, Z	B, D, F	S	P, R	DAL, SHA, TEP
RWR84#81R6%&	81.6	7	S, W, N, Z	B, D	S	P, R	DAL, SHA, TEP
RWR84#82R5%&	82.5	7	S, W, N, Z	B, D, F	S	P, R	DAL, SHA, TEP
RWR84#83R5%&	83.5	7	S, W, N, Z	B, D	S	P, R	DAL, SHA, TEP
RWR84#84R5%&	84.5	7	S, W, N, Z	B, D, F	S	P, R	DAL, SHA, TEP
RWR84#85R6%&	85.6	7	S, W, N, Z	B, D	S	P, R	DAL, SHA, TEP
RWR84#86R6%&	86.6	7	S, W, N, Z	B, D, F	S	P, R	DAL, SHA, TEP
RWR84#87R6%&	87.6	7	S, W, N, Z	B, D	S	P, R	DAL, SHA, TEP
RWR84#88R7%&	88.7	7	S, W, N, Z	B, D, F	S	P, R	DAL, SHA, TEP
RWR84#89R8%&	89.8	7	S, W, N, Z	B, D	S	P, R	DAL, SHA, TEP
RWR84#90R9%&	90.9	7	S, W, N, Z	B, D, F	S	P, R	DAL, SHA, TEP
RWR84#92R0%&	92.0	7	S, W, N, Z	B, D	S	P, R	DAL, SHA, TEP
RWR84#93R1%&	93.1	7	S, W, N, Z	B, D, F	S	P, R	DAL, SHA, TEP
RWR84#94R2%&	94.2	7	S, W, N, Z	B, D	S	P, R	DAL, SHA, TEP
RWR84#95R3%&	95.3	7	S, W, N, Z	B, D, F	S	P, R	DAL, SHA, TEP
RWR84#96R5%&	96.5	7	S, W, N, Z	B, D	S	P, R	DAL, SHA, TEP
RWR84#97R6%&	97.6	7	S, W, N, Z	B, D, F	S	P, R	DAL, SHA, TEP
RWR84#98R8%&	98.8	7	S, W, N, Z	B, D	S	P, R	DAL, SHA, TEP
RWR84#1000%&	100	7	S, W, N, Z	B, D, F	S	P, R	DAL, SHA, TEP
RWR84#1010%&	101	7	S, W, N, Z	B, D	S	P, R	DAL, SHA, TEP
RWR84#1020%&	102	7	S, W, N, Z	B, D, F	S	P, R	DAL, SHA, TEP
RWR84#1040%&	104	7	S, W, N, Z	B, D	S	P, R	DAL, SHA, TEP
RWR84#1050%&	105	7	S, W, N, Z	B, D, F	S	P, R	DAL, SHA, TEP
RWR84#1060%&	106	7	S, W, N, Z	B, D	S	P, R	DAL, SHA, TEP
RWR84#1070%&	107	7	S, W, N, Z	B, D, F	S	P, R	DAL, SHA, TEP
RWR84#1090%&	109	7	S, W, N, Z	B, D	S	P, R	DAL, SHA, TEP
RWR84#1100%&	110	7	S, W, N, Z	B, D, F	S	P, R	DAL, SHA, TEP
RWR84#1110%&	111	7	S, W, N, Z	B, D	S	P, R	DAL, SHA, TEP
RWR84#1130%&	113	7	S, W, N, Z	B, D, F	S	P, R	DAL, SHA, TEP
RWR84#1140%&	114	7	S, W, N, Z	B, D	S	P, R	DAL, SHA, TEP
RWR84#1150%&	115	7	S, W, N, Z	B, D, F	S	P, R	DAL, SHA, TEP
RWR84#1170%&	117	7	S, W, N, Z	B, D	S	P, R	DAL, SHA, TEP
RWR84#1180%&	118	7	S, W, N, Z	B, D, F	S	P, R	DAL, SHA, TEP
RWR84#1200%&	120	7	S, W, N, Z	B, D	S	P, R	DAL, SHA, TEP
RWR84#1210%&	121	7	S, W, N, Z	B, D, F	S	P, R	DAL, SHA, TEP
RWR84#1230%&	123	7	S, W, N, Z	B, D	S	P, R	DAL, SHA, TEP

RWR84#1240%&	124	7	S, W, N, Z	B, D, F	S	P, R	DAL, SHA, TEP
RWR84#1260%&	126	7	S, W, N, Z	B, D	S	P, R	DAL, SHA, TEP
RWR84#1270%&	127	7	S, W, N, Z	B, D, F	S	P, R	DAL, SHA, TEP
RWR84#1290%&	129	7	S, W, N, Z	B, D	S	P, R	DAL, SHA, TEP
RWR84#1300%&	130	7	S, W, N, Z	B, D, F	S	P, R	DAL, SHA, TEP
RWR84#1320%&	132	7	S, W, N, Z	B, D	S	P, R	DAL, SHA, TEP
RWR84#1330%&	133	7	S, W, N, Z	B, D, F	S	P, R	DAL, SHA, TEP
RWR84#1350%&	135	7	S, W, N, Z	B, D	S	P, R	DAL, SHA, TEP
RWR84#1370%&	137	7	S, W, N, Z	B, D, F	S	P, R	DAL, SHA, TEP
RWR84#1380%&	138	7	S, W, N, Z	B, D	S	P, R	DAL, SHA, TEP
RWR84#1400%&	140	7	S, W, N, Z	B, D, F	S	P, R	DAL, SHA, TEP
RWR84#1420%&	142	7	S, W, N, Z	B, D	S	P, R	DAL, SHA, TEP
RWR84#1430%&	143	7	S, W, N, Z	B, D, F	S	P, R	DAL, SHA, TEP
RWR84#1450%&	145	7	S, W, N, Z	B, D	S	P, R	DAL, SHA, TEP
RWR84#1470%&	147	7	S, W, N, Z	B, D, F	S	P, R	DAL, SHA, TEP
RWR84#1490%&	149	7	S, W, N, Z	B, D	S	P, R	DAL, SHA, TEP
RWR84#1500%&	150	7	S, W, N, Z	B, D, F	S	P, R	DAL, SHA, TEP
RWR84#1520%&	152	7	S, W, N, Z	B, D	S	P, R	DAL, SHA, TEP
RWR84#1540%&	154	7	S, W, N, Z	B, D, F	S	P, R	DAL, SHA, TEP
RWR84#1560%&	156	7	S, W, N, Z	B, D	S	P, R	DAL, SHA, TEP
RWR84#1580%&	158	7	S, W, N, Z	B, D, F	S	P, R	DAL, SHA, TEP
RWR84#1600%&	160	7	S, W, N, Z	B, D	S	P, R	DAL, SHA, TEP
RWR84#1620%&	162	7	S, W, N, Z	B, D, F	S	P, R	DAL, SHA, TEP
RWR84#1640%&	164	7	S, W, N, Z	B, D	S	P, R	DAL, SHA, TEP
RWR84#1650%&	165	7	S, W, N, Z	B, D, F	S	P, R	DAL, SHA, TEP
RWR84#1670%&	167	7	S, W, N, Z	B, D	S	P, R	DAL, SHA, TEP
RWR84#1690%&	169	7	S, W, N, Z	B, D, F	S	P, R	DAL, SHA, TEP
RWR84#1720%&	172	7	S, W, N, Z	B, D	S	P, R	DAL, SHA, TEP
RWR84#1740%&	174	7	S, W, N, Z	B, D, F	S	P, R	DAL, SHA, TEP
RWR84#1760%&	176	7	S, W, N, Z	B, D	S	P, R	DAL, SHA, TEP
RWR84#1780%&	178	7	S, W, N, Z	B, D, F	S	P, R	DAL, SHA, TEP
RWR84#1800%&	180	7	S, W, N, Z	B, D, F	S	P, R	DAL, SHA, TEP
RWR84#1820%&	182	7	S, W, N, Z	B, D, F	S	P, R	DAL, SHA, TEP
RWR84#1840%&	184	7	S, W, N, Z	B, D	S	P, R	DAL, SHA, TEP
RWR84#1870%&	187	7	S, W, N, Z	B, D, F	S	P, R	DAL, SHA, TEP
RWR84#1890%&	189	7	S, W, N, Z	B, D	S	P, R	DAL, SHA, TEP
RWR84#1910%&	191	7	S, W, N, Z	B, D, F	S	P, R	DAL, SHA, TEP
RWR84#1930%&	193	7	S, W, N, Z	B, D	S	P, R	DAL, SHA, TEP
RWR84#1960%&	196	7	S, W, N, Z	B, D, F	S	P, R	DAL, SHA, TEP
RWR84#1980%&	198	7	S, W, N, Z	B, D	S	P, R	DAL, SHA, TEP
RWR84#2000%&	200	7	S, W, N, Z	B, D, F	S	P, R	DAL, SHA, TEP
RWR84#2030%&	203	7	S, W, N, Z	B, D	S	P, R	DAL, SHA, TEP
RWR84#2050%&	205	7	S, W, N, Z	B, D, F	S	P, R	DAL, SHA, TEP
RWR84#2080%&	208	7	S, W, N, Z	B, D	S	P, R	DAL, SHA, TEP
RWR84#2100%&	210	7	S, W, N, Z	B, D, F	S	P, R	DAL, SHA, TEP
RWR84#2130%&	213	7	S, W, N, Z	B, D	S	P, R	DAL, SHA, TEP
RWR84#2150%&	215	7	S, W, N, Z	B, D, F	S	P, R	DAL, SHA, TEP

RWR84#2180%&	218	7	S, W, N, Z	B, D	S	P, R	DAL, SHA, TEP
RWR84#2210%&	221	7	S, W, N, Z	B, D, F	S	P, R	DAL, SHA, TEP
RWR84#2230%&	223	7	S, W, N, Z	B, D	S	P, R	DAL, SHA, TEP
RWR84#2260%&	226	7	S, W, N, Z	B, D, F	S	P, R	DAL, SHA, TEP
RWR84#2290%&	229	7	S, W, N, Z	B, D	S	P, R	DAL, SHA, TEP
RWR84#2320%&	232	7	S, W, N, Z	B, D, F	S	P, R	DAL, SHA, TEP
RWR84#2340%&	234	7	S, W, N, Z	B, D	S	P, R	DAL, SHA, TEP
RWR84#2370%&	237	7	S, W, N, Z	B, D, F	S	P, R	DAL, SHA, TEP
RWR84#2400%&	240	7	S, W, N, Z	B, D	S	P, R	DAL, SHA, TEP
RWR84#2430%&	243	7	S, W, N, Z	B, D, F	S	P, R	DAL, SHA, TEP
RWR84#2460%&	246	7	S, W, N, Z	B, D	S	P, R	DAL, SHA, TEP
RWR84#2490%&	249	7	S, W, N, Z	B, D, F	S	P, R	DAL, SHA, TEP
RWR84#2520%&	252	7	S, W, N, Z	B, D	S	P, R	DAL, SHA, TEP
RWR84#2550%&	255	7	S, W, N, Z	B, D, F	S	P, R	DAL, SHA, TEP
RWR84#2580%&	258	7	S, W, N, Z	B, D	S	P, R	DAL, SHA, TEP
RWR84#2610%&	261	7	S, W, N, Z	B, D, F	S	P, R	DAL, SHA, TEP
RWR84#2640%&	264	7	S, W, N, Z	B, D	S	P, R	DAL, SHA, TEP
RWR84#2670%&	267	7	S, W, N, Z	B, D, F	S	P, R	DAL, SHA, TEP
RWR84#2710%&	271	7	S, W, N, Z	B, D	S	P, R	DAL, SHA, TEP
RWR84#2740%&	274	7	S, W, N, Z	B, D, F	S	P, R	DAL, SHA, TEP
RWR84#2770%&	277	7	S, W, N, Z	B, D	S	P, R	DAL, SHA, TEP
RWR84#2800%&	280	7	S, W, N, Z	B, D, F	S	P, R	DAL, SHA, TEP
RWR84#2840%&	284	7	S, W, N, Z	B, D	S	P, R	DAL, SHA, TEP
RWR84#2870%&	287	7	S, W, N, Z	B, D, F	S	P, R	DAL, SHA, TEP
RWR84#2910%&	291	7	S, W, N, Z	B, D	S	P, R	DAL, SHA, TEP
RWR84#2940%&	294	7	S, W, N, Z	B, D, F	S	P, R	DAL, SHA, TEP
RWR84#2980%&	298	7	S, W, N, Z	B, D	S	P, R	DAL, SHA, TEP
RWR84#3010%&	301	7	S, W, N, Z	B, D, F	S	P, R	DAL, SHA, TEP
RWR84#3050%&	305	7	S, W, N, Z	B, D	S	P, R	DAL, SHA, TEP
RWR84#3090%&	309	7	S, W, N, Z	B, D, F	S	P, R	DAL, SHA, TEP
RWR84#3120%&	312	7	S, W, N, Z	B, D	S	P, R	DAL, SHA, TEP
RWR84#3160%&	316	7	S, W, N, Z	B, D, F	S	P, R	DAL, SHA, TEP
RWR84#3200%&	320	7	S, W, N, Z	B, D	S	P, R	DAL, SHA, TEP
RWR84#3240%&	324	7	S, W, N, Z	B, D, F	S	P, R	DAL, SHA, TEP
RWR84#3280%&	328	7	S, W, N, Z	B, D	S	P, R	DAL, SHA, TEP
RWR84#3320%&	332	7	S, W, N, Z	B, D, F	S	P, R	DAL, SHA, TEP
RWR84#3360%&	336	7	S, W, N, Z	B, D	S	P, R	DAL, SHA, TEP
RWR84#3400%&	340	7	S, W, N, Z	B, D, F	S	P, R	DAL, SHA, TEP
RWR84#3440%&	344	7	S, W, N, Z	B, D	S	P, R	DAL, SHA, TEP
RWR84#3480%&	348	7	S, W, N, Z	B, D, F	S	P, R	DAL, SHA, TEP
RWR84#3520%&	352	7	S, W, N, Z	B, D	S	P, R	DAL, SHA, TEP
RWR84#3570%&	357	7	S, W, N, Z	B, D, F	S	P, R	DAL, SHA, TEP
RWR84#3610%&	361	7	S, W, N, Z	B, D	S	P, R	DAL, SHA, TEP
RWR84#3650%&	365	7	S, W, N, Z	B, D, F	S	P, R	DAL, SHA, TEP
RWR84#3700%&	370	7	S, W, N, Z	B, D	S	P, R	DAL, SHA, TEP
RWR84#3740%&	374	7	S, W, N, Z	B, D, F	S	P, R	DAL, SHA, TEP
RWR84#3790%&	379	7	S, W, N, Z	B, D	S	P, R	DAL, SHA, TEP

RWR84#3830%&	383	7	S, W, N, Z	B, D, F	S	P, R	DAL, SHA, TEP
RWR84#3880%&	388	7	S, W, N, Z	B, D	S	P, R	DAL, SHA, TEP
RWR84#3920%&	392	7	S, W, N, Z	B, D, F	S	P, R	DAL, SHA, TEP
RWR84#3970%&	397	7	S, W, N, Z	B, D	S	P, R	DAL, SHA, TEP
RWR84#4020%&	402	7	S, W, N, Z	B, D, F	S	P, R	DAL, SHA, TEP
RWR84#4070%&	407	7	S, W, N, Z	B, D	S	P, R	DAL, SHA, TEP
RWR84#4120%&	412	7	S, W, N, Z	B, D, F	S	P, R	DAL, SHA, TEP
RWR84#4170%&	417	7	S, W, N, Z	B, D	S	P, R	DAL, SHA, TEP
RWR84#4220%&	422	7	S, W, N, Z	B, D, F	S	P, R	DAL, SHA, TEP
RWR84#4270%&	427	7	S, W, N, Z	B, D	S	P, R	DAL, SHA, TEP
RWR84#4320%&	432	7	S, W, N, Z	B, D, F	S	P, R	DAL, SHA, TEP
RWR84#4370%&	437	7	S, W, N, Z	B, D	S	P, R	DAL, SHA, TEP
RWR84#4420%&	442	7	S, W, N, Z	B, D, F	S	P, R	DAL, SHA, TEP
RWR84#4480%&	448	7	S, W, N, Z	B, D	S	P, R	DAL, SHA, TEP
RWR84#4530%&	453	7	S, W, N, Z	B, D, F	S	P, R	DAL, SHA, TEP
RWR84#4590%&	459	7	S, W, N, Z	B, D	S	P, R	DAL, SHA, TEP
RWR84#4640%&	464	7	S, W, N, Z	B, D, F	S	P, R	DAL, SHA, TEP
RWR84#4700%&	470	7	S, W, N, Z	B, D	S	P, R	DAL, SHA, TEP
RWR84#4750%&	475	7	S, W, N, Z	B, D, F	S	P, R	DAL, SHA, TEP
RWR84#4810%&	481	7	S, W, N, Z	B, D	S	P, R	DAL, SHA, TEP
RWR84#4870%&	487	7	S, W, N, Z	B, D, F	S	P, R	DAL, SHA, TEP
RWR84#4930%&	493	7	S, W, N, Z	B, D	S	P, R	DAL, SHA, TEP
RWR84#4990%&	499	7	S, W, N, Z	B, D, F	S	P, R	DAL, SHA, TEP
RWR84#5050%&	505	7	S, W, N, Z	B, D	S	P, R	DAL, SHA, TEP
RWR84#5110%&	511	7	S, W, N, Z	B, D, F	S	P, R	DAL, SHA, TEP
RWR84#5170%&	517	7	S, W, N, Z	B, D	S	P, R	DAL, SHA, TEP
RWR84#5230%&	523	7	S, W, N, Z	B, D, F	S	P, R	DAL, SHA, TEP
RWR84#5300%&	530	7	S, W, N, Z	B, D	S	P, R	DAL, SHA, TEP
RWR84#5360%&	536	7	S, W, N, Z	B, D, F	S	P, R	DAL, SHA, TEP
RWR84#5420%&	542	7	S, W, N, Z	B, D	S	P, R	DAL, SHA, TEP
RWR84#5490%&	549	7	S, W, N, Z	B, D, F	S	P, R	DAL, SHA, TEP
RWR84#5560%&	556	7	S, W, N, Z	B, D	S	P, R	DAL, SHA, TEP
RWR84#5620%&	562	7	S, W, N, Z	B, D, F	S	P, R	DAL, SHA, TEP
RWR84#5690%&	569	7	S, W, N, Z	B, D	S	P, R	DAL, SHA, TEP
RWR84#5760%&	576	7	S, W, N, Z	B, D, F	S	P, R	DAL, SHA, TEP
RWR84#5830%&	583	7	S, W, N, Z	B, D	S	P, R	DAL, SHA, TEP
RWR84#5900%&	590	7	S, W, N, Z	B, D, F	S	P, R	DAL, SHA, TEP
RWR84#5970%&	597	7	S, W, N, Z	B, D	S	P, R	DAL, SHA, TEP
RWR84#6040%&	604	7	S, W, N, Z	B, D, F	S	P, R	DAL, SHA, TEP
RWR84#6120%&	612	7	S, W, N, Z	B, D	S	P, R	DAL, SHA, TEP
RWR84#6190%&	619	7	S, W, N, Z	B, D, F	S	P, R	DAL, SHA, TEP
RWR84#6260%&	626	7	S, W, N, Z	B, D	S	P, R	DAL, SHA, TEP
RWR84#6340%&	634	7	S, W, N, Z	B, D, F	S	P, R	DAL, SHA, TEP
RWR84#6420%&	642	7	S, W, N, Z	B, D	S	P, R	DAL, SHA, TEP
RWR84#6490%&	649	7	S, W, N, Z	B, D, F	S	P, R	DAL, SHA, TEP
RWR84#6570%&	657	7	S, W, N, Z	B, D	S	P, R	DAL, SHA, TEP
RWR84#6650%&	665	7	S, W, N, Z	B, D, F	S	P, R	DAL, SHA, TEP

RWR84#6730%&	673	7	S, W, N, Z	B, D	S	P, R	DAL, SHA, TEP
RWR84#6810%&	681	7	S, W, N, Z	B, D, F	S	P, R	DAL, SHA, TEP
RWR84#6900%&	690	7	S, W, N, Z	B, D	S	P, R	DAL, SHA, TEP
RWR84#6980%&	698	7	S, W, N, Z	B, D, F	S	P, R	DAL, SHA, TEP
RWR84#7060%&	706	7	S, W, N, Z	B, D	S	P, R	DAL, SHA, TEP
RWR84#7150%&	715	7	S, W, N, Z	B, D, F	S	P, R	DAL, SHA, TEP
RWR84#7230%&	723	7	S, W, N, Z	B, D	S	P, R	DAL, SHA, TEP
RWR84#7320%&	732	7	S, W, N, Z	B, D, F	S	P, R	DAL, SHA, TEP
RWR84#7410%&	741	7	S, W, N, Z	B, D	S	P, R	DAL, SHA, TEP
RWR84#7500%&	750	7	S, W, N, Z	B, D, F	S	P, R	DAL, SHA, TEP
RWR84#7590%&	759	7	S, W, N, Z	B, D	S	P, R	DAL, SHA, TEP
RWR84#7680%&	768	7	S, W, N, Z	B, D, F	S	P, R	DAL, SHA, TEP
RWR84#7770%&	777	7	S, W, N, Z	B, D	S	P, R	DAL, SHA, TEP
RWR84#7870%&	787	7	S, W, N, Z	B, D, F	S	P, R	DAL, SHA, TEP
RWR84#7960%&	796	7	S, W, N, Z	B, D	S	P, R	DAL, SHA, TEP
RWR84#8060%&	806	7	S, W, N, Z	B, D, F	S	P, R	DAL, SHA, TEP
RWR84#8160%&	816	7	S, W, N, Z	B, D	S	P, R	DAL, SHA, TEP
RWR84#8250%&	825	7	S, W, N, Z	B, D, F	S	P, R	DAL, SHA, TEP
RWR84#8350%&	835	7	S, W, N, Z	B, D	S	P, R	DAL, SHA, TEP
RWR84#8450%&	845	7	S, W, N, Z	B, D, F	S	P, R	DAL, SHA, TEP
RWR84#8560%&	856	7	S, W, N, Z	B, D	S	P, R	DAL, SHA, TEP
RWR84#8660%&	866	7	S, W, N, Z	B, D, F	S	P, R	DAL, SHA, TEP
RWR84#8760%&	876	7	S, W, N, Z	B, D	S	P, R	DAL, SHA, TEP
RWR84#8870%&	887	7	S, W, N, Z	B, D, F	S	P, R	DAL, SHA, TEP
RWR84#8980%&	898	7	S, W, N, Z	B, D	S	P, R	DAL, SHA, TEP
RWR84#9090%&	909	7	S, W, N, Z	B, D, F	S	P, R	DAL, SHA, TEP
RWR84#9200%&	920	7	S, W, N, Z	B, D	S	P, R	DAL, SHA, TEP
RWR84#9310%&	931	7	S, W, N, Z	B, D, F	S	P, R	DAL, SHA, TEP
RWR84#9420%&	942	7	S, W, N, Z	B, D	S	P, R	DAL, SHA, TEP
RWR84#9530%&	953	7	S, W, N, Z	B, D, F	S	P, R	DAL, SHA, TEP
RWR84#9650%&	965	7	S, W, N, Z	B, D	S	P, R	DAL, SHA, TEP
RWR84#9760%&	976	7	S, W, N, Z	B, D, F	S	P, R	DAL, SHA, TEP
RWR84#9880%&	988	7	S, W, N, Z	B, D	S	P, R	DAL, SHA, TEP
RWR84#1001%&	1000	7	S, W, N, Z	B, D, F	S	P, R	DAL, SHA, TEP
RWR84#1011%&	1010	7	S, W, N, Z	B, D	S	P, R	DAL, SHA, TEP
RWR84#1021%&	1020	7	S, W, N, Z	B, D, F	S	P, R	DAL, SHA, TEP
RWR84#1041%&	1040	7	S, W, N, Z	B, D	S	P, R	DAL, SHA, TEP
RWR84#1051%&	1050	7	S, W, N, Z	B, D, F	S	P, R	DAL, SHA, TEP
RWR84#1061%&	1060	7	S, W, N, Z	B, D	S	P, R	DAL, SHA, TEP
RWR84#1071%&	1070	7	S, W, N, Z	B, D, F	S	P, R	DAL, SHA, TEP
RWR84#1091%&	1090	7	S, W, N, Z	B, D	S	P, R	DAL, SHA, TEP
RWR84#1101%&	1100	7	S, W, N, Z	B, D, F	S	P, R	DAL, SHA, TEP
RWR84#1111%&	1110	7	S, W, N, Z	B, D	S	P, R	DAL, SHA, TEP
RWR84#1131%&	1130	7	S, W, N, Z	B, D, F	S	P, R	DAL, SHA, TEP
RWR84#1141%&	1140	7	S, W, N, Z	B, D	S	P, R	DAL, SHA, TEP
RWR84#1151%&	1150	7	S, W, N, Z	B, D, F	S	P, R	DAL, SHA, TEP
RWR84#1171%&	1170	7	S, W, N, Z	B, D	S	P, R	DAL, SHA, TEP

RWR84#1181%&	1180	7	S, W, N, Z	B, D, F	S	P, R	DAL, SHA, TEP
RWR84#1201%&	1200	7	S, W, N, Z	B, D	S	P, R	DAL, SHA, TEP
RWR84#1211%&	1210	7	S, W, N, Z	B, D, F	S	P, R	DAL, SHA, TEP
RWR84#1231%&	1230	7	S, W, N, Z	B, D	S	P, R	DAL, SHA, TEP
RWR84#1241%&	1240	7	S, W, N, Z	B, D, F	S	P, R	DAL, SHA, TEP
RWR84#1261%&	1260	7	S, W, N, Z	B, D	S	P, R	DAL, SHA, TEP
RWR84#1271%&	1270	7	S, W, N, Z	B, D, F	S	P, R	DAL, SHA, TEP
RWR84#1291%&	1290	7	S, W, N, Z	B, D	S	P, R	DAL, SHA, TEP
RWR84#1301%&	1300	7	S, W, N, Z	B, D, F	S	P, R	DAL, SHA, TEP
RWR84#1321%&	1320	7	S, W, N, Z	B, D	S	P, R	DAL, SHA, TEP
RWR84#1331%&	1330	7	S, W, N, Z	B, D, F	S	P, R	DAL, SHA, TEP
RWR84#1351%&	1350	7	S, W, N, Z	B, D	S	P, R	DAL, SHA, TEP
RWR84#1371%&	1370	7	S, W, N, Z	B, D, F	S	P, R	DAL, SHA, TEP
RWR84#1381%&	1380	7	S, W, N, Z	B, D	S	P, R	DAL, SHA, TEP
RWR84#1401%&	1400	7	S, W, N, Z	B, D, F	S	P, R	DAL, SHA, TEP
RWR84#1421%&	1420	7	S, W, N, Z	B, D	S	P, R	DAL, SHA, TEP
RWR84#1431%&	1430	7	S, W, N, Z	B, D, F	S	P, R	DAL, SHA, TEP
RWR84#1451%&	1450	7	S, W, N, Z	B, D	S	P, R	DAL, SHA, TEP
RWR84#1471%&	1470	7	S, W, N, Z	B, D, F	S	P, R	DAL, SHA, TEP
RWR84#1491%&	1490	7	S, W, N, Z	B, D	S	P, R	DAL, SHA, TEP
RWR84#1501%&	1500	7	S, W, N, Z	B, D, F	S	P, R	DAL, SHA, TEP
RWR84#1521%&	1520	7	S, W, N, Z	B, D	S	P, R	DAL, SHA, TEP
RWR84#1541%&	1540	7	S, W, N, Z	B, D, F	S	P, R	DAL, SHA, TEP
RWR84#1561%&	1560	7	S, W, N, Z	B, D	S	P, R	DAL, SHA, TEP
RWR84#1581%&	1580	7	S, W, N, Z	B, D, F	S	P, R	DAL, SHA, TEP
RWR84#1601%&	1600	7	S, W, N, Z	B, D	S	P, R	DAL, SHA, TEP
RWR84#1621%&	1620	7	S, W, N, Z	B, D, F	S	P, R	DAL, SHA, TEP
RWR84#1641%&	1640	7	S, W, N, Z	B, D	S	P, R	DAL, SHA, TEP
RWR84#1651%&	1650	7	S, W, N, Z	B, D, F	S	P, R	DAL, SHA, TEP
RWR84#1671%&	1670	7	S, W, N, Z	B, D	S	P, R	DAL, SHA, TEP
RWR84#1691%&	1690	7	S, W, N, Z	B, D, F	S	P, R	DAL, SHA, TEP
RWR84#1721%&	1720	7	S, W, N, Z	B, D	S	P, R	DAL, SHA, TEP
RWR84#1741%&	1740	7	S, W, N, Z	B, D, F	S	P, R	DAL, SHA, TEP
RWR84#1761%&	1760	7	S, W, N, Z	B, D	S	P, R	DAL, SHA, TEP
RWR84#1781%&	1780	7	S, W, N, Z	B, D, F	S	P, R	DAL, SHA, TEP
RWR84#1801%&	1800	7	S, W, N, Z	B, D, F	S	P, R	DAL, SHA, TEP
RWR84#1821%&	1820	7	S, W, N, Z	B, D, F	S	P, R	DAL, SHA, TEP
RWR84#1841%&	1840	7	S, W, N, Z	B, D	S	P, R	DAL, SHA, TEP
RWR84#1871%&	1870	7	S, W, N, Z	B, D, F	S	P, R	DAL, SHA, TEP
RWR84#1891%&	1890	7	S, W, N, Z	B, D	S	P, R	DAL, SHA, TEP
RWR84#1911%&	1910	7	S, W, N, Z	B, D, F	S	P, R	DAL, SHA, TEP
RWR84#1931%&	1930	7	S, W, N, Z	B, D	S	P, R	DAL, SHA, TEP
RWR84#1961%&	1960	7	S, W, N, Z	B, D, F	S	P, R	DAL, SHA, TEP
RWR84#1981%&	1980	7	S, W, N, Z	B, D	S	P, R	DAL, SHA, TEP
RWR84#2001%&	2000	7	S, W, N, Z	B, D, F	S	P, R	DAL, SHA, TEP
RWR84#2031%&	2030	7	S, W, N, Z	B, D	S	P, R	DAL, SHA, TEP
RWR84#2051%&	2050	7	S, W, N, Z	B, D, F	S	P, R	DAL, SHA, TEP

RWR84#2081%&	2080	7	S, W, N, Z	B, D	S	P, R	DAL, SHA, TEP
RWR84#2101%&	2100	7	S, W, N, Z	B, D, F	S	P, R	DAL, SHA, TEP
RWR84#2131%&	2130	7	S, W, N, Z	B, D	S	P, R	DAL, SHA, TEP
RWR84#2151%&	2150	7	S, W, N, Z	B, D, F	S	P, R	DAL, SHA, TEP
RWR84#2181%&	2180	7	S, W, N, Z	B, D	S	P, R	DAL, SHA, TEP
RWR84#2211%&	2210	7	S, W, N, Z	B, D, F	S	P, R	DAL, SHA, TEP
RWR84#2231%&	2230	7	S, W, N, Z	B, D	S	P, R	DAL, SHA, TEP
RWR84#2261%&	2260	7	S, W, N, Z	B, D, F	S	P, R	DAL, SHA, TEP
RWR84#2291%&	2290	7	S, W, N, Z	B, D	S	P, R	DAL, SHA, TEP
RWR84#2321%&	2320	7	S, W, N, Z	B, D, F	S	P, R	DAL, SHA, TEP
RWR84#2341%&	2340	7	S, W, N, Z	B, D	S	P, R	DAL, SHA, TEP
RWR84#2371%&	2370	7	S, W, N, Z	B, D, F	S	P, R	DAL, SHA, TEP
RWR84#2401%&	2400	7	S, W, N, Z	B, D	S	P, R	DAL, SHA, TEP
RWR84#2431%&	2430	7	S, W, N, Z	B, D, F	S	P, R	DAL, SHA, TEP
RWR84#2461%&	2460	7	S, W, N, Z	B, D	S	P, R	DAL, SHA, TEP
RWR84#2491%&	2490	7	S, W, N, Z	B, D, F	S	P, R	DAL, SHA, TEP
RWR84#2521%&	2520	7	S, W, N, Z	B, D	S	P, R	DAL, SHA, TEP
RWR84#2551%&	2550	7	S, W, N, Z	B, D, F	S	P, R	DAL, SHA, TEP
RWR84#2581%&	2580	7	S, W, N, Z	B, D	S	P, R	DAL, SHA, TEP
RWR84#2611%&	2610	7	S, W, N, Z	B, D, F	S	P, R	DAL, SHA, TEP
RWR84#2641%&	2640	7	S, W, N, Z	B, D	S	P, R	DAL, SHA, TEP
RWR84#2671%&	2670	7	S, W, N, Z	B, D, F	S	P, R	DAL, SHA, TEP
RWR84#2711%&	2710	7	S, W, N, Z	B, D	S	P, R	DAL, SHA, TEP
RWR84#2741%&	2740	7	S, W, N, Z	B, D, F	S	P, R	DAL, SHA, TEP
RWR84#2771%&	2770	7	S, W, N, Z	B, D	S	P, R	DAL, SHA, TEP
RWR84#2801%&	2800	7	S, W, N, Z	B, D, F	S	P, R	DAL, SHA, TEP
RWR84#2841%&	2840	7	S, W, N, Z	B, D	S	P, R	DAL, SHA, TEP
RWR84#2871%&	2870	7	S, W, N, Z	B, D, F	S	P, R	DAL, SHA, TEP
RWR84#2911%&	2910	7	S, W, N, Z	B, D	S	P, R	DAL, SHA, TEP
RWR84#2941%&	2940	7	S, W, N, Z	B, D, F	S	P, R	DAL, SHA, TEP
RWR84#2981%&	2980	7	S, W, N, Z	B, D	S	P, R	DAL, SHA, TEP
RWR84#3011%&	3010	7	S, W, N, Z	B, D, F	S	P, R	DAL, SHA, TEP
RWR84#3051%&	3050	7	S, W, N, Z	B, D	S	P, R	DAL, SHA, TEP
RWR84#3091%&	3090	7	S, W, N, Z	B, D, F	S	P, R	DAL, SHA, TEP
RWR84#3121%&	3120	7	S, W, N, Z	B, D	S	P, R	DAL, SHA, TEP
RWR84#3161%&	3160	7	S, W, N, Z	B, D, F	S	P, R	DAL, SHA, TEP
RWR84#3201%&	3200	7	S, W, N, Z	B, D	S	P, R	DAL, SHA, TEP
RWR84#3241%&	3240	7	S, W, N, Z	B, D, F	S	P, R	DAL, SHA, TEP
RWR84#3281%&	3280	7	S, W, N, Z	B, D	S	P, R	DAL, SHA, TEP
RWR84#3321%&	3320	7	S, W, N, Z	B, D, F	S	P, R	DAL, SHA, TEP
RWR84#3361%&	3360	7	S, W, N, Z	B, D	S	P, R	DAL, SHA, TEP
RWR84#3401%&	3400	7	S, W, N, Z	B, D, F	S	P, R	DAL, SHA, TEP
RWR84#3441%&	3440	7	S, W, N, Z	B, D	S	P, R	DAL, SHA, TEP
RWR84#3481%&	3480	7	S, W, N, Z	B, D, F	S	P, R	DAL, SHA, TEP
RWR84#3521%&	3520	7	S, W, N, Z	B, D	S	P, R	DAL, SHA, TEP
RWR84#3571%&	3570	7	S, W, N, Z	B, D, F	S	P, R	DAL, SHA, TEP
RWR84#3611%&	3610	7	S, W, N, Z	B, D	S	P, R	DAL, SHA, TEP

RWR84#3651%&	3650	7	S, W, N, Z	B, D, F	S	P, R	DAL, SHA, TEP
RWR84#3701%&	3700	7	S, W, N, Z	B, D	S	P, R	DAL, SHA, TEP
RWR84#3741%&	3740	7	S, W, N, Z	B, D, F	S	P, R	DAL, SHA, TEP
RWR84#3791%&	3790	7	S, W, N, Z	B, D	S	P, R	DAL, SHA, TEP
RWR84#3831%&	3830	7	S, W, N, Z	B, D, F	S	P, R	DAL, SHA, TEP
RWR84#3881%&	3880	7	S, W, N, Z	B, D	S	P, R	DAL, SHA, TEP
RWR84#3921%&	3920	7	S, W, N, Z	B, D, F	S	P, R	DAL, SHA, TEP
RWR84#3971%&	3970	7	S, W, N, Z	B, D	S	P, R	DAL, SHA, TEP
RWR84#4021%&	4020	7	S, W, N, Z	B, D, F	S	P, R	DAL, SHA, TEP
RWR84#4071%&	4070	7	S, W, N, Z	B, D	S	P, R	DAL, SHA, TEP
RWR84#4121%&	4120	7	S, W, N, Z	B, D, F	S	P, R	DAL, SHA, TEP
RWR84#4171%&	4170	7	S, W, N, Z	B, D	S	P, R	DAL, SHA, TEP
RWR84#4221%&	4220	7	S, W, N, Z	B, D, F	S	P, R	DAL, SHA, TEP
RWR84#4271%&	4270	7	S, W, N, Z	B, D	S	P, R	DAL, SHA, TEP
RWR84#4321%&	4320	7	S, W, N, Z	B, D, F	S	P, R	DAL, SHA, TEP
RWR84#4371%&	4370	7	S, W, N, Z	B, D	S	P, R	DAL, SHA, TEP
RWR84#4421%&	4420	7	S, W, N, Z	B, D, F	S	P, R	DAL, SHA, TEP
RWR84#4481%&	4480	7	S, W, N, Z	B, D	S	P, R	DAL, SHA, TEP
RWR84#4531%&	4530	7	S, W, N, Z	B, D, F	S	P, R	DAL, SHA, TEP
RWR84#4591%&	4590	7	S, W, N, Z	B, D	S	P, R	DAL, SHA, TEP
RWR84#4641%&	4640	7	S, W, N, Z	B, D, F	S	P, R	DAL, SHA, TEP
RWR84#4701%&	4700	7	S, W, N, Z	B, D	S	P, R	DAL, SHA, TEP
RWR84#4751%&	4750	7	S, W, N, Z	B, D, F	S	P, R	DAL, SHA, TEP
RWR84#4811%&	4810	7	S, W, N, Z	B, D	S	P, R	DAL, SHA, TEP
RWR84#4871%&	4870	7	S, W, N, Z	B, D, F	S	P, R	DAL, SHA, TEP
RWR84#4931%&	4930	7	S, W, N, Z	B, D	S	P, R	DAL, SHA, TEP
RWR84#4991%&	4990	7	S, W, N, Z	B, D, F	S	P, R	DAL, SHA, TEP
RWR84#5051%&	5050	7	S, W, N, Z	B, D	S	P, R	DAL, SHA, TEP
RWR84#5111%&	5110	7	S, W, N, Z	B, D, F	S	P, R	DAL, SHA, TEP
RWR84#5171%&	5170	7	S, W, N, Z	B, D	S	P, R	DAL, SHA, TEP
RWR84#5231%&	5230	7	S, W, N, Z	B, D, F	S	P, R	DAL, SHA, TEP
RWR84#5301%&	5300	7	S, W, N, Z	B, D	S	P, R	DAL, SHA, TEP
RWR84#5361%&	5360	7	S, W, N, Z	B, D, F	S	P, R	DAL, SHA, TEP
RWR84#5421%&	5420	7	S, W, N, Z	B, D	S	P, R	DAL, SHA, TEP
RWR84#5491%&	5490	7	S, W, N, Z	B, D, F	S	P, R	DAL, SHA, TEP
RWR84#5561%&	5560	7	S, W, N, Z	B, D	S	P, R	DAL, SHA, TEP
RWR84#5621%&	5620	7	S, W, N, Z	B, D, F	S	P, R	DAL, SHA, TEP
RWR84#5691%&	5690	7	S, W, N, Z	B, D	S	P, R	DAL, SHA, TEP
RWR84#5761%&	5760	7	S, W, N, Z	B, D, F	S	P, R	DAL, SHA, TEP
RWR84#5831%&	5830	7	S, W, N, Z	B, D	S	P, R	DAL, SHA, TEP
RWR84#5901%&	5900	7	S, W, N, Z	B, D, F	S	P, R	DAL, SHA, TEP
RWR84#5971%&	5970	7	S, W, N, Z	B, D	S	P, R	DAL, SHA, TEP
RWR84#6041%&	6040	7	S, W, N, Z	B, D, F	S	P, R	DAL, SHA, TEP
RWR84#6121%&	6120	7	S, W, N, Z	B, D	S	P, R	DAL, SHA, TEP
RWR84#6191%&	6190	7	S, W, N, Z	B, D, F	S	P, R	DAL, SHA, TEP
RWR84#6261%&	6260	7	S, W	B, D	S	P, R	DAL, SHA, TEP
RWR84#6341%&	6340	7	S, W	B, D, F	S	P, R	DAL, SHA, TEP

RWR84#6421%&	6420	7	S, W	B, D	S	P, R	DAL, SHA, TEP
RWR84#6491%&	6490	7	S, W	B, D, F	S	P, R	DAL, SHA, TEP
RWR84#6571%&	6570	7	S, W	B, D	S	P, R	DAL, SHA, TEP
RWR84#6651%&	6650	7	S, W	B, D, F	S	P, R	DAL, SHA, TEP
RWR84#6731%&	6730	7	S, W	B, D	S	P, R	DAL, SHA, TEP
RWR84#6811%&	6810	7	S, W	B, D, F	S	P, R	DAL, SHA, TEP
RWR84#6901%&	6900	7	S, W	B, D	S	P, R	DAL, SHA, TEP
RWR84#6981%&	6980	7	S, W	B, D, F	S	P, R	DAL, SHA, TEP
RWR84#7061%&	7060	7	S, W	B, D	S	P, R	DAL, SHA, TEP
RWR84#7151%&	7150	7	S, W	B, D, F	S	P, R	DAL, SHA, TEP
RWR84#7231%&	7230	7	S, W	B, D	S	P, R	DAL, SHA, TEP
RWR84#7321%&	7320	7	S, W	B, D, F	S	P, R	DAL, SHA, TEP
RWR84#7411%&	7410	7	S, W	B, D	S	P, R	DAL, SHA, TEP
RWR84#7501%&	7500	7	S, W	B, D, F	S	P, R	DAL, SHA, TEP
RWR84#7591%&	7590	7	S, W	B, D	S	P, R	DAL, SHA, TEP
RWR84#7681%&0	7680	7	S, W	B, D, F	S	P, R	DAL, SHA, TEP
RWR84#7771%&0	7770	7	S, W	B, D	S	P, R	DAL, SHA, TEP
RWR84#7871%&	7870	7	S, W	B, D, F	S	P, R	DAL, SHA, TEP
RWR84#7961%&	7960	7	S, W	B, D	S	P, R	DAL, SHA, TEP
RWR84#8061%&	8060	7	S, W	B, D, F	S	P, R	DAL, SHA, TEP
RWR84#8161%&	8160	7	S, W	B, D	S	P, R	DAL, SHA, TEP
RWR84#8251%&	8250	7	S, W	B, D, F	S	P, R	DAL, SHA, TEP
RWR84#8351%&	8350	7	S, W	B, D	S	P, R	DAL, SHA, TEP
RWR84#8451%&	8450	7	S, W	B, D, F	S	P, R	DAL, SHA, TEP
RWR84#8561%&	8560	7	S, W	B, D	S	P, R	DAL, SHA, TEP
RWR84#8661%&	8660	7	S, W	B, D, F	S	P, R	DAL, SHA, TEP
RWR84#8761%&	8760	7	S, W	B, D	S	P, R	DAL, SHA, TEP
RWR84#8871%&	8870	7	S, W	B, D, F	S	P, R	DAL, SHA, TEP
RWR84#8981%&	8980	7	S, W	B, D	S	P, R	DAL, SHA, TEP
RWR84#9091%&	9090	7	S, W	B, D, F	S	P, R	DAL, SHA, TEP
RWR84#9201%&	9200	7	S, W	B, D	S	P, R	DAL, SHA, TEP
RWR84#9311%&	9310	7	S, W	B, D, F	S	P, R	DAL, SHA, TEP
RWR84#9421%&	9420	7	S, W	B, D	S	P, R	DAL, SHA, TEP
RWR84#9531%&	9530	7	S, W	B, D, F	S	P, R	DAL, SHA, TEP
RWR84#9651%&	9650	7	S, W	B, D	S	P, R	DAL, SHA, TEP
RWR84#9761%&	9760	7	S, W	B, D, F	S	P, R	DAL, SHA, TEP
RWR84#9881%&	9880	7	S, W	B, D	S	P, R	DAL, SHA, TEP
RWR84#1002%&	10000	7	S, W	B, D, F	S	P, R	DAL, SHA, TEP
RWR84#1012%&	10100	7	S, W	B, D	S	P, R	DAL, SHA, TEP
RWR84#1022%&	10200	7	S, W	B, D, F	S	P, R	DAL, SHA, TEP
RWR84#1042%&	10400	7	S, W	B, D	S	P, R	DAL, SHA, TEP
RWR84#1052%&	10500	7	S, W	B, D, F	S	P, R	DAL, SHA, TEP
RWR84#1062%&	10600	7	S, W	B, D	S	P, R	DAL, SHA, TEP
RWR84#1072%&	10700	7	S, W	B, D, F	S	P, R	DAL, SHA, TEP
RWR84#1092%&	10900	7	S, W	B, D	S	P, R	DAL, SHA, TEP
RWR84#1102%&	11000	7	S, W	B, D, F	S	P, R	DAL, SHA, TEP
RWR84#1112%&	11100	7	S, W	B, D	S	P, R	DAL, SHA, TEP

RWR84#1132%&	11300	7	S, W	B, D, F	S	P, R	DAL, SHA, TEP
RWR84#1142%&	11400	7	S, W	B, D	S	P, R	DAL, SHA, TEP
RWR84#1152%&	11500	7	S, W	B, D, F	S	P, R	DAL, SHA, TEP
RWR84#1172%&	11700	7	S, W	B, D	S	P, R	DAL, SHA, TEP
RWR84#1182%&	11800	7	S, W	B, D, F	S	P, R	DAL, SHA, TEP
RWR84#1202%&	12000	7	S, W	B, D	S	P, R	DAL, SHA, TEP
RWR84#1212%&	12100	7	S, W	B, D, F	S	P, R	DAL, SHA, TEP
RWR84#1232%&	12300	7	S, W	B, D	S	P, R	DAL, SHA, TEP
RWR84#1242%&	12400	7	S, W	B, D, F	S	P, R	DAL, SHA, TEP

RWR84 RESISTORS DECADE BREAKDOWN

Click on the link below to see the associated parts selection listing:

Resistance Range
0.1 Ohms through 0.988 Ohms
1.00 Ohms through 9.88 Ohms
10.0 Ohms through 98.8 Ohms
100 Ohms through 988 Ohms
1000 Ohms through 9880 Ohms
10000 Ohms through 12400 Ohms

RWR84 Wirewound Resistors: 0.100 Ohms through 0.988 Ohms

	Resistance	Power	Terminal	Resistance	Level 1	Level 2	
Part Number	Value (Ohms)	Rating (W)	Characteristic (#)	Tolerance (%)	(FRL)(&)	(FRL)(&)	Manufacturer
RWR84#R100%&	0.100	7	S, W, N, Z	B, D, F	S	P, R	DAL, SHA, TEP
RWR84#R101%&	0.101	7	S, W, N, Z	B, D	S	P, R	DAL, SHA, TEP
RWR84#R102%&	0.102	7	S, W, N, Z	B, D, F	S	P, R	DAL, SHA, TEP
RWR84#R104%&	0.104	7	S, W, N, Z	B, D	S	P, R	DAL, SHA, TEP
RWR84#R105%&	0.105	7	S, W, N, Z	B, D, F	S	P, R	DAL, SHA, TEP
RWR84#R106%&	0.106	7	S, W, N, Z	B, D	S	P, R	DAL, SHA, TEP
RWR84#R107%&	0.107	7	S, W, N, Z	B, D, F	S	P, R	DAL, SHA, TEP
RWR84#R109%&	0.109	7	S, W, N, Z	B, D	S	P, R	DAL, SHA, TEP
RWR84#R110%&	0.110	7	S, W, N, Z	B, D, F	S	P, R	DAL, SHA, TEP
RWR84#R111%&	0.111	7	S, W, N, Z	B, D	S	P, R	DAL, SHA, TEP
RWR84#R113%&	0.113	7	S, W, N, Z	B, D, F	S	P, R	DAL, SHA, TEP
RWR84#R114%&	0.114	7	S, W, N, Z	B, D	S	P, R	DAL, SHA, TEP
RWR84#R115%&	0.115	7	S, W, N, Z	B, D, F	S	P, R	DAL, SHA, TEP
	Resistance	Power	Terminal	Resistance	Level 1	Level 2	
Part Number	Value (Ohms)	Rating (W)	Characteristic (#)	Tolerance (%)	(FRL)(&)	(FRL)(&)	Manufacturer
RWR84#R117%&	0.117	7	S, W, N, Z	B, D	S	P, R	DAL, SHA, TEP
RWR84#R118%&	0.118	7	S, W, N, Z	B, D, F	S	P, R	DAL, SHA, TEP
RWR84#R120%&	0.120	7	S, W, N, Z	B, D	S	P, R	DAL, SHA, TEP
RWR84#R121%&	0.121	7	S, W, N, Z	B, D, F	S	P, R	DAL, SHA, TEP

RWR84#R123%&	0.123	7	S, W, N, Z	B, D	S	P, R	DAL, SHA, TEP
RWR84#R124%&	0.124	7	S, W, N, Z	B, D, F	S	P, R	DAL, SHA, TEP
RWR84#R126%&	0.126	7	S, W, N, Z	B, D	S	P, R	DAL, SHA, TEP
RWR84#R127%&	0.127	7	S, W, N, Z	B, D, F	S	P, R	DAL, SHA, TEP
RWR84#R129%&	0.129	7	S, W, N, Z	B, D	S	P, R	DAL, SHA, TEP
RWR84#R130%&	0.130	7	S, W, N, Z	B, D, F	S	P, R	DAL, SHA, TEP
RWR84#R132%&	0.132	7	S, W, N, Z	B, D	S	P, R	DAL, SHA, TEP
RWR84#R133%&	0.133	7	S, W, N, Z	B, D, F	S	P, R	DAL, SHA, TEP
RWR84#R135%&	0.135	7	S, W, N, Z	B, D	S	P, R	DAL, SHA, TEP
RWR84#R137%&	0.137	7	S, W, N, Z	B, D, F	S	P, R	DAL, SHA, TEP
RWR84#R138%&	0.138	7	S, W, N, Z	B, D	S	P, R	DAL, SHA, TEP
	Resistance	Power	Terminal	Resistance	Level 1	Level 2	
Part Number	Value (Ohms)	Rating (W)	Characteristic (#)	Tolerance (%)	(FRL)(&)	(FRL)(&)	Manufacturer
RWR84#R140%&	0.140	7	S, W, N, Z	B, D, F	S	P, R	DAL, SHA, TEP
RWR84#R142%&	0.142	7	S, W, N, Z	B, D	S	P, R	DAL, SHA, TEP
RWR84#R143%&	0.143	7	S, W, N, Z	B, D, F	S	P, R	DAL, SHA, TEP
RWR84#R145%&	0.145	7	S, W, N, Z	B, D	S	P, R	DAL, SHA, TEP
RWR84#R147%&	0.147	7	S, W, N, Z	B, D, F	S	P, R	DAL, SHA, TEP
RWR84#R149%&	0.149	7	S, W, N, Z	B, D	S	P, R	DAL, SHA, TEP
RWR84#R150%&	0.150	7	S, W, N, Z	B, D, F	S	P, R	DAL, SHA, TEP
RWR84#R152%&	0.152	7	S, W, N, Z	B, D	S	P, R	DAL, SHA, TEP
RWR84#R154%&	0.154	7	S, W, N, Z	B, D, F	S	P, R	DAL, SHA, TEP
RWR84#R156%&	0.156	7	S, W, N, Z	B, D	S	P, R	DAL, SHA, TEP
RWR84#R158%&	0.158	7	S, W, N, Z	B, D, F	S	P, R	DAL, SHA, TEP
RWR84#R160%&	0.160	7	S, W, N, Z	B, D	S	P, R	DAL, SHA, TEP
	Resistance	Power	Terminal	Resistance	Level 1	Level 2	
Part Number	Value (Ohms)	Rating (W)	Characteristic (#)	Tolerance (%)	(FRL)(&)	(FRL)(&)	Manufacturer
RWR84#R162%&	0.162	7	S, W, N, Z	B, D, F	S	P, R	DAL, SHA, TEP
RWR84#R164%&	0.164	7	S, W, N, Z	B, D	S	P, R	DAL, SHA, TEP
RWR84#R165%&	0.165	7	S, W, N, Z	B, D, F	S	P, R	DAL, SHA, TEP
RWR84#R167%&	0.167	7	S, W, N, Z	B, D	S	P, R	DAL, SHA, TEP
RWR84#R169%&	0.169	7	S, W, N, Z	B, D, F	S	P, R	DAL, SHA, TEP
RWR84#R172%&	0.172	7	S, W, N, Z	B, D	S	P, R	DAL, SHA, TEP
RWR84#R174%&	0.174	7	S, W, N, Z	B, D, F	S	P, R	DAL, SHA, TEP
RWR84#R176%&	0.176	7	S, W, N, Z	B, D	S	P, R	DAL, SHA, TEP
RWR84#R178%&	0.178	7	S, W, N, Z	B, D, F	S	P, R	DAL, SHA, TEP
RWR84#R180%&	0.180	7	S, W, N, Z	B, D, F	S	P, R	DAL, SHA, TEP
RWR84#R182%&	0.182	7	S, W, N, Z	B, D, F	S	P, R	DAL, SHA, TEP
RWR84#R184#&	0.184	7	S, W, N, Z	B, D	S	P, R	DAL, SHA, TEP
RWR84#R187%&	0.187	7	S, W, N, Z	B, D, F	S	P, R	DAL, SHA, TEP
RWR84#R189%&	0.189	7	S, W, N, Z	B, D	S	P, R	DAL, SHA, TEP
	Resistance	Power	Terminal	Resistance	Level 1	Level 2	
Part Number	Value (Ohms)	Rating (W)	Characteristic (#)	Tolerance (%)	(FRL)(&)	(FRL)(&)	Manufacturer
RWR84#R191%&	0.191	7	S, W, N, Z	B, D, F	S	P, R	DAL, SHA, TEP
RWR84#R193%&	0.193	7	S, W, N, Z	B, D	S	P, R	DAL, SHA, TEP
RWR84#R196%&	0.196	7	S, W, N, Z	B, D, F	S	P, R	DAL, SHA, TEP
RWR84#R198%&	0.198	7	S, W, N, Z	B, D	S	P, R	DAL, SHA, TEP

RWR84#R200%&	0.200	7	S, W, N, Z	B, D, F	S	P, R	DAL, SHA, TEP
RWR84#R203%&	0.203	7	S, W, N, Z	B, D	S	P, R	DAL, SHA, TEP
RWR84#R205%&	0.205	7	S, W, N, Z	B, D, F	S	P, R	DAL, SHA, TEP
RWR84#R208%&	0.208	7	S, W, N, Z	B, D	S	P, R	DAL, SHA, TEP
RWR84#R210%&	0.210	7	S, W, N, Z	B, D, F	S	P, R	DAL, SHA, TEP
RWR84#R213%&	0.213	7	S, W, N, Z	B, D	S	P, R	DAL, SHA, TEP
RWR84#R215%&	0.215	7	S, W, N, Z	B, D, F	S	P, R	DAL, SHA, TEP
RWR84#R218%&	0.218	7	S, W, N, Z	B, D	S	P, R	DAL, SHA, TEP
RWR84#R221%&	0.221	7	S, W, N, Z	B, D, F	S	P, R	DAL, SHA, TEP
RWR84#R223%&	0.223	7	S, W, N, Z	B, D	S	P, R	DAL, SHA, TEP
	Resistance	Power	Terminal	Resistance	Level 1	Level 2	
Part Number	Value (Ohms)	Rating (W)	Characteristic (#)	Tolerance (%)	(FRL)(&)	(FRL)(&)	Manufacturer
RWR84#R226%&	0.226	7	S, W, N, Z	B, D, F	S	P, R	DAL, SHA, TEP
RWR84#R229%&	0.229	7	S, W, N, Z	B, D	S	P, R	DAL, SHA, TEP
RWR84#R232%&	0.232	7	S, W, N, Z	B, D, F	S	P, R	DAL, SHA, TEP
RWR84#R234%&	0.234	7	S, W, N, Z	B, D	S	P, R	DAL, SHA, TEP
RWR84#R237%&	0.237	7	S, W, N, Z	B, D, F	S	P, R	DAL, SHA, TEP
RWR84#R240%&	0.240	7	S, W, N, Z	B, D	S	P, R	DAL, SHA, TEP
RWR84#R243%&	0.243	7	S, W, N, Z	B, D, F	S	P, R	DAL, SHA, TEP
RWR84#R246%&	0.246	7	S, W, N, Z	B, D	S	P, R	DAL, SHA, TEP
RWR84#R249%&	0.249	7	S, W, N, Z	B, D, F	S	P, R	DAL, SHA, TEP
RWR84#R252%&	0.252	7	S, W, N, Z	B, D	S	P, R	DAL, SHA, TEP
RWR84#R255%&	0.255	7	S, W, N, Z	B, D, F	S	P, R	DAL, SHA, TEP
RWR84#R258%&	0.258	7	S, W, N, Z	B, D	S	P, R	DAL, SHA, TEP
RWR84#R261%&	0.261	7	S, W, N, Z	B, D, F	S	P, R	DAL, SHA, TEP
RWR84#R264%&	0.264	7	S, W, N, Z	B, D	S	P, R	DAL, SHA, TEP
	Resistance	Power	Terminal	Resistance	Level 1	Level 2	
Part Number	Value (Ohms)	Rating (W)	Characteristic (#)	Tolerance (%)	(FRL)(&)	(FRL)(&)	Manufacturer
RWR84#R267%&	0.267	7	S, W, N, Z	B, D, F	S	P, R	DAL, SHA, TEP
RWR84#R271%&	0.271	7	S, W, N, Z	B, D	S	P, R	DAL, SHA, TEP
RWR84#R274%&	0.274	7	S, W, N, Z	B, D, F	S	P, R	DAL, SHA, TEP
RWR84#R277%&	0.277	7	S, W, N, Z	B, D	S	P, R	DAL, SHA, TEP
RWR84#R280%&	0.280	7	S, W, N, Z	B, D, F	S	P, R	DAL, SHA, TEP
RWR84#R284#&	0.284	7	S, W, N, Z	B, D	S	P, R	DAL, SHA, TEP
RWR84#R287%&	0.287	7	S, W, N, Z	B, D, F	S	P, R	DAL, SHA, TEP
RWR84#R291%&	0.291	7	S, W, N, Z	B, D	S	P, R	DAL, SHA, TEP
RWR84#R294%&	0.294	7	S, W, N, Z	B, D, F	S	P, R	DAL, SHA, TEP
RWR84#R298%&	0.298	7	S, W, N, Z	B, D	S	P, R	DAL, SHA, TEP
RWR84#R301%&	0.301	7	S, W, N, Z	B, D, F	S	P, R	DAL, SHA, TEP
RWR84#R305%&	0.305	7	S, W, N, Z	B, D	S	P, R	DAL, SHA, TEP
RWR84#R309%&	0.309	7	S, W, N, Z	B, D, F	S	P, R	DAL, SHA, TEP
RWR84#R312%&	0.312	7	S, W, N, Z	B, D	S	P, R	DAL, SHA, TEP
	Resistance	Power	Terminal	Resistance	Level 1	Level 2	
Part Number	Value (Ohms)	Rating (W)	Characteristic (#)	Tolerance (%)	(FRL)(&)	(FRL)(&)	Manufacturer
RWR84#R316%&	0.316	7	S, W, N, Z	B, D, F	S	P, R	DAL, SHA, TEP
RWR84#R320%&	0.320	7	S, W, N, Z	B, D	S	P, R	DAL, SHA, TEP
RWR84#R324%&	0.324	7	S, W, N, Z	B, D, F	S	P, R	DAL, SHA, TEP

RWR84#R328%&	0.328	7	S, W, N, Z	B, D	S	P, R	DAL, SHA, TEP
RWR84#R332%&	0.332	7	S, W, N, Z	B, D, F	S	P, R	DAL, SHA, TEP
RWR84#R336%&	0.336	7	S, W, N, Z	B, D	S	P, R	DAL, SHA, TEP
RWR84#R340%&	0.340	7	S, W, N, Z	B, D, F	S	P, R	DAL, SHA, TEP
RWR84#R344%&	0.344	7	S, W, N, Z	B, D	S	P, R	DAL, SHA, TEP
RWR84#R348%&	0.348	7	S, W, N, Z	B, D, F	S	P, R	DAL, SHA, TEP
RWR84#R352%&	0.352	7	S, W, N, Z	B, D	S	P, R	DAL, SHA, TEP
RWR84#R357%&	0.357	7	S, W, N, Z	B, D, F	S	P, R	DAL, SHA, TEP
RWR84#R361%&	0.361	7	S, W, N, Z	B, D	S	P, R	DAL, SHA, TEP
RWR84#R365%&	0.365	7	S, W, N, Z	B, D, F	S	P, R	DAL, SHA, TEP
RWR84#R370%&	0.370	7	S, W, N, Z	B, D	S	P, R	DAL, SHA, TEP
	Resistance	Power	Terminal	Resistance	Level 1	Level 2	
Part Number	Value (Ohms)	Rating (W)	Characteristic (#)	Tolerance (%)	(FRL)(&)	(FRL)(&)	Manufacturer
RWR84#R374%&	0.374	7	S, W, N, Z	B, D, F	S	P, R	DAL, SHA, TEP
RWR84#R379%&	0.379	7	S, W, N, Z	B, D	S	P, R	DAL, SHA, TEP
RWR84#R383%&	0.383	7	S, W, N, Z	B, D, F	S	P, R	DAL, SHA, TEP
RWR84#R388%&	0.388	7	S, W, N, Z	B, D	S	P, R	DAL, SHA, TEP
RWR84#R392%&	0.392	7	S, W, N, Z	B, D, F	S	P, R	DAL, SHA, TEP
RWR84#R397%&	0.397	7	S, W, N, Z	B, D	S	P, R	DAL, SHA, TEP
RWR84#R402%&	0.402	7	S, W, N, Z	B, D, F	S	P, R	DAL, SHA, TEP
RWR84#R407%&	0.407	7	S, W, N, Z	B, D	S	P, R	DAL, SHA, TEP
RWR84#R412%&	0.412	7	S, W, N, Z	B, D, F	S	P, R	DAL, SHA, TEP
RWR84#R417%&	0.417	7	S, W, N, Z	B, D	S	P, R	DAL, SHA, TEP
RWR84#R422%&	0.422	7	S, W, N, Z	B, D, F	S	P, R	DAL, SHA, TEP
RWR84#R427%&	0.427	7	S, W, N, Z	B, D	S	P, R	DAL, SHA, TEP
RWR84#R432%&	0.432	7	S, W, N, Z	B, D, F	S	P, R	DAL, SHA, TEP
RWR84#R437%&	0.437	7	S, W, N, Z	B, D	S	P, R	DAL, SHA, TEP
	Resistance	Power	Terminal	Resistance	Level 1	Level 2	
Part Number	Value (Ohms)	Rating (W)	Characteristic (#)	Tolerance (%)	(FRL)(&)	(FRL)(&)	Manufacturer
RWR84#R442%&	0.442	7	S, W, N, Z	B, D, F	S	P, R	DAL, SHA, TEP
RWR84#R448%&	0.448	7	S, W, N, Z	B, D	S	P, R	DAL, SHA, TEP
RWR84#R453%&	0.453	7	S, W, N, Z	B, D, F	S	P, R	DAL, SHA, TEP
RWR84#R459%&	0.459	7	S, W, N, Z	B, D	S	P, R	DAL, SHA, TEP
RWR84#R464%&	0.464	7	S, W, N, Z	B, D, F	S	P, R	DAL, SHA, TEP
RWR84#R470%&	0.470	7	S, W, N, Z	B, D	S	P, R	DAL, SHA, TEP
RWR84#R475%&	0.475	7	S, W, N, Z	B, D, F	S	P, R	DAL, SHA, TEP
RWR84#R481%&	0.481	7	S, W, N, Z	B, D	S	P, R	DAL, SHA, TEP
RWR84#R487%&	0.487	7	S, W, N, Z	B, D, F	S	P, R	DAL, SHA, TEP
RWR84#R493%&	0.493	7	S, W, N, Z	B, D	S	P, R	DAL, SHA, TEP
RWR84#R499%&	0.499	7	S, W, N, Z	B, D, F	S	P, R	DAL, SHA, TEP
RWR84#R505%&	0.505	7	S, W, N, Z	B, D	S	P, R	DAL, SHA, TEP
RWR84#R511%&	0.511	7	S, W, N, Z	B, D, F	S	P, R	DAL, SHA, TEP
RWR84#R517%&	0.517	7	S, W, N, Z	B, D	S	P, R	DAL, SHA, TEP
	Resistance	Power	Terminal	Resistance	Level 1	Level 2	
Part Number	Value (Ohms)	Rating (W)	Characteristic (#)	Tolerance (%)	(FRL)(&)	(FRL)(&)	Manufacturer
RWR84#R523%&	0.523	7	S, W, N, Z	B, D, F	S	P, R	DAL, SHA, TEP
RWR84#R530%&	0.530	7	S, W, N, Z	B, D	S	P, R	DAL, SHA, TEP

RWR84#R536%&	0.536	7	S, W, N, Z	B, D, F	S	P, R	DAL, SHA, TEP
RWR84#R542%&	0.542	7	S, W, N, Z	B, D	S	P, R	DAL, SHA, TEP
RWR84#R549%&	0.549	7	S, W, N, Z	B, D, F	S	P, R	DAL, SHA, TEP
RWR84#R556%&	0.556	7	S, W, N, Z	B, D	S	P, R	DAL, SHA, TEP
RWR84#R562%&	0.562	7	S, W, N, Z	B, D, F	S	P, R	DAL, SHA, TEP
RWR84#R569%&	0.569	7	S, W, N, Z	B, D	S	P, R	DAL, SHA, TEP
RWR84#R576%&	0.576	7	S, W, N, Z	B, D, F	S	P, R	DAL, SHA, TEP
RWR84#R583%&	0.583	7	S, W, N, Z	B, D	S	P, R	DAL, SHA, TEP
RWR84#R590%&	0.590	7	S, W, N, Z	B, D, F	S	P, R	DAL, SHA, TEP
RWR84#R597%&	0.597	7	S, W, N, Z	B, D	S	P, R	DAL, SHA, TEP
RWR84#R604%&	0.604	7	S, W, N, Z	B, D, F	S	P, R	DAL, SHA, TEP
RWR84#R612%&	0.612	7	S, W, N, Z	B, D	S	P, R	DAL, SHA, TEP
	Resistance	Power	Terminal	Resistance	Level 1	Level 2	
Part Number	Value (Ohms)	Rating (W)	Characteristic (#)	Tolerance (%)	(FRL)(&)	(FRL)(&)	Manufacturer
RWR84#R619%&	0.619	7	S, W, N, Z	B, D, F	S	P, R	DAL, SHA, TEP
RWR84#R626%&	0.626	7	S, W, N, Z	B, D	S	P, R	DAL, SHA, TEP
RWR84#R634%&	0.634	7	S, W, N, Z	B, D, F	S	P, R	DAL, SHA, TEP
RWR84#R642%&	0.642	7	S, W, N, Z	B, D	S	P, R	DAL, SHA, TEP
RWR84#R649%&	0.649	7	S, W, N, Z	B, D, F	S	P, R	DAL, SHA, TEP
RWR84#R657%&	0.657	7	S, W, N, Z	B, D	S	P, R	DAL, SHA, TEP
RWR84#R665%&	0.665	7	S, W, N, Z	B, D, F	S	P, R	DAL, SHA, TEP
RWR84#R673%&	0.673	7	S, W, N, Z	B, D	S	P, R	DAL, SHA, TEP
RWR84#R681%&	0.681	7	S, W, N, Z	B, D, F	S	P, R	DAL, SHA, TEP
RWR84#R690%&	0.690	7	S, W, N, Z	B, D	S	P, R	DAL, SHA, TEP
RWR84#R698%&	0.698	7	S, W, N, Z	B, D, F	S	P, R	DAL, SHA, TEP
RWR84#R706%&	0.706	7	S, W, N, Z	B, D	S	P, R	DAL, SHA, TEP
RWR84#R715%&	0.715	7	S, W, N, Z	B, D, F	S	P, R	DAL, SHA, TEP
RWR84#R723%&	0.723	7	S, W, N, Z	B, D	S	P, R	DAL, SHA, TEP
	Resistance	Power	Terminal	Resistance	Level 1	Level 2	
Part Number	Value (Ohms)	Rating (W)	Characteristic (#)	Tolerance (%)	(FRL)(&)	(FRL)(&)	Manufacturer
RWR84#R732%&	0.732	7	S, W, N, Z	B, D, F	S	P, R	DAL, SHA, TEP
RWR84#R741%&	0.741	7	S, W, N, Z	B, D	S	P, R	DAL, SHA, TEP
RWR84#R750%&	0.750	7	S, W, N, Z	B, D, F	S	P, R	DAL, SHA, TEP
RWR84#R759%&	0.759	7	S, W, N, Z	B, D	S	P, R	DAL, SHA, TEP
RWR84#R768%&	0.768	7	S, W, N, Z	B, D, F	S	P, R	DAL, SHA, TEP
RWR84#R776%&	0.776	7	S, W, N, Z	B, D	S	P, R	DAL, SHA, TEP
RWR84#R787%&	0.787	7	S, W, N, Z	B, D, F	S	P, R	DAL, SHA, TEP
RWR84#R796%&	0.796	7	S, W, N, Z	B, D	S	P, R	DAL, SHA, TEP
RWR84#R806%&	0.806	7	S, W, N, Z	B, D, F	S	P, R	DAL, SHA, TEP
RWR84#R816%&	0.816	7	S, W, N, Z	B, D	S	P, R	DAL, SHA, TEP
RWR84#R825%&	0.825	7	S, W, N, Z	B, D, F	S	P, R	DAL, SHA, TEP
RWR84#R835%&	0.835	7	S, W, N, Z	B, D	S	P, R	DAL, SHA, TEP
RWR84#R845%&	0.845	7	S, W, N, Z	B, D, F	S	P, R	DAL, SHA, TEP
RWR84#R856%&	0.856	7	S, W, N, Z	B, D	S	P, R	DAL, SHA, TEP
	Resistance	Power	Terminal	Resistance	Level 1	Level 2	
Part Number	Value (Ohms)	Rating (W)	Characteristic (#)	Tolerance (%)	(FRL)(&)	(FRL)(&)	Manufacturer
RWR84#R866%&	0.866	7	S, W, N, Z	B, D, F	S	P, R	DAL, SHA, TEP

RWR84#R876%&	0.876	7	S, W, N, Z	B, D	S	P, R	DAL, SHA, TEP
RWR84#R887%&	0.887	7	S, W, N, Z	B, D, F	S	P, R	DAL, SHA, TEP
RWR84#R898%&	0.898	7	S, W, N, Z	B, D	S	P, R	DAL, SHA, TEP
RWR84#R909%&	0.909	7	S, W, N, Z	B, D, F	S	P, R	DAL, SHA, TEP
RWR84#R920%&	0.920	7	S, W, N, Z	B, D	S	P, R	DAL, SHA, TEP
RWR84#R931%&	0.931	7	S, W, N, Z	B, D, F	S	P, R	DAL, SHA, TEP
RWR84#R942%&	0.942	7	S, W, N, Z	B, D	S	P, R	DAL, SHA, TEP
RWR84#R953%&	0.953	7	S, W, N, Z	B, D, F	S	P, R	DAL, SHA, TEP
RWR84#R965%&	0.965	7	S, W, N, Z	B, D	S	P, R	DAL, SHA, TEP
RWR84#R976%&	0.976	7	S, W, N, Z	B, D, F	S	P, R	DAL, SHA, TEP
RWR84#R988%&	0.988	7	S, W, N, Z	B, D	S	P, R	DAL, SHA, TEP
	Resistance	Power	Terminal	Resistance	Level 1	Level 2	
Part Number	Value (Ohms)	Rating (W)	Characteristic (#)	Tolerance (%)	(FRL)(&)	(FRL)(&)	Manufacturer

RWR84 Wirewound Resistors: 1.00 Ohms through 9.88 Ohms

	Resistance	Power	Terminal	Resistance	Level 1	Level 2	
Part Number	Value (Ohms)	Rating (W)	Characteristic (#)	Tolerance (%)	(FRL)(&)	(FRL)(&)	Manufacturer
RWR84#1R00%&	1.00	7	S, W, N, Z	B, D, F	S	P, R	DAL, SHA, TEP
RWR84#1R01%&	1.01	7	S, W, N, Z	B, D	S	P, R	DAL, SHA, TEP
RWR84#1R02%&	1.02	7	S, W, N, Z	B, D, F	S	P, R	DAL, SHA, TEP
RWR84#1R04%&	1.04	7	S, W, N, Z	B, D	S	P, R	DAL, SHA, TEP
RWR84#1R05%&	1.05	7	S, W, N, Z	B, D, F	S	P, R	DAL, SHA, TEP
RWR84#1R06%&	1.06	7	S, W, N, Z	B, D	S	P, R	DAL, SHA, TEP
RWR84#1R07%&	1.07	7	S, W, N, Z	B, D, F	S	P, R	DAL, SHA, TEP
RWR84#1R09%&	1.09	7	S, W, N, Z	B, D	S	P, R	DAL, SHA, TEP
RWR84#1R10%&	1.10	7	S, W, N, Z	B, D, F	S	P, R	DAL, SHA, TEP
RWR84#1R11%&	1.11	7	S, W, N, Z	B, D	S	P, R	DAL, SHA, TEP
RWR84#1R13%&	1.13	7	S, W, N, Z	B, D, F	S	P, R	DAL, SHA, TEP
RWR84#1R14%&	1.14	7	S, W, N, Z	B, D	S	P, R	DAL, SHA, TEP
RWR84#1R15%&	1.15	7	S, W, N, Z	B, D, F	S	P, R	DAL, SHA, TEP
	Resistance	Power	Terminal	Resistance	Level 1	Level 2	
Part Number	Value (Ohms)	Rating (W)	Characteristic (#)	Tolerance (%)	(FRL)(&)	(FRL)(&)	Manufacturer
RWR84#1R17%&	1.17	7	S, W, N, Z	B, D	S	P, R	DAL, SHA, TEP
RWR84#1R18%&	1.18	7	S, W, N, Z	B, D, F	S	P, R	DAL, SHA, TEP
RWR84#1R20%&	1.20	7	S, W, N, Z	B, D	S	P, R	DAL, SHA, TEP
RWR84#1R21%&	1.21	7	S, W, N, Z	B, D, F	S	P, R	DAL, SHA, TEP
RWR84#1R23%&	1.23	7	S, W, N, Z	B, D	S	P, R	DAL, SHA, TEP
RWR84#1R24%&	1.24	7	S, W, N, Z	B, D, F	S	P, R	DAL, SHA, TEP
RWR84#1R26%&	1.26	7	S, W, N, Z	B, D	S	P, R	DAL, SHA, TEP
RWR84#1R27%&	1.27	7	S, W, N, Z	B, D, F	S	P, R	DAL, SHA, TEP
RWR84#1R29%&	1.29	7	S, W, N, Z	B, D	S	P, R	DAL, SHA, TEP
RWR84#1R30%&	1.30	7	S, W, N, Z	B, D, F	S	P, R	DAL, SHA, TEP
RWR84#1R32%&	1.32	7	S, W, N, Z	B, D	S	P, R	DAL, SHA, TEP
RWR84#1R33%&	1.33	7	S, W, N, Z	B, D, F	S	P, R	DAL, SHA, TEP

RWR84#1R35%&	1.35	7	S, W, N, Z	B, D	S	P, R	DAL, SHA, TEP
RWR84#1R37%&	1.37	7	S, W, N, Z	B, D, F	S	P, R	DAL, SHA, TEP
RWR84#1R38%&	1.38	7	S, W, N, Z	B, D	S	P, R	DAL, SHA, TEP
	Resistance	Power	Terminal	Resistance	Level 1	Level 2	
Part Number	Value (Ohms)	Rating (W)	Characteristic (#)	Tolerance (%)	(FRL)(&)	(FRL)(&)	Manufacturer
RWR84#1R40%&	1.40	7	S, W, N, Z	B, D, F	S	P, R	DAL, SHA, TEP
RWR84#1R42%&	1.42	7	S, W, N, Z	B, D	S	P, R	DAL, SHA, TEP
RWR84#1R43%&	1.43	7	S, W, N, Z	B, D, F	S	P, R	DAL, SHA, TEP
RWR84#1R45%&	1.45	7	S, W, N, Z	B, D	S	P, R	DAL, SHA, TEP
RWR84#1R47%&	1.47	7	S, W, N, Z	B, D, F	S	P, R	DAL, SHA, TEP
RWR84#1R49%&	1.49	7	S, W, N, Z	B, D	S	P, R	DAL, SHA, TEP
RWR84#1R50%&	1.50	7	S, W, N, Z	B, D, F	S	P, R	DAL, SHA, TEP
RWR84#1R52%&	1.52	7	S, W, N, Z	B, D	S	P, R	DAL, SHA, TEP
RWR84#1R54%&	1.54	7	S, W, N, Z	B, D, F	S	P, R	DAL, SHA, TEP
RWR84#1R56%&	1.56	7	S, W, N, Z	B, D	S	P, R	DAL, SHA, TEP
RWR84#1R58%&	1.58	7	S, W, N, Z	B, D, F	S	P, R	DAL, SHA, TEP
RWR84#1R60%&	1.60	7	S, W, N, Z	B, D	S	P, R	DAL, SHA, TEP
	Resistance	Power	Terminal	Resistance	Level 1	Level 2	
Part Number	Value (Ohms)	Rating (W)	Characteristic (#)	Tolerance (%)	(FRL)(&)	(FRL)(&)	Manufacturer
RWR84#1R62%&	1.62	7	S, W, N, Z	B, D, F	S	P, R	DAL, SHA, TEP
RWR84#1R64%&	1.64	7	S, W, N, Z	B, D	S	P, R	DAL, SHA, TEP
RWR84#1R65%&	1.65	7	S, W, N, Z	B, D, F	S	P, R	DAL, SHA, TEP
RWR84#1R67%&	1.67	7	S, W, N, Z	B, D	S	P, R	DAL, SHA, TEP
RWR84#1R69%&	1.69	7	S, W, N, Z	B, D, F	S	P, R	DAL, SHA, TEP
RWR84#1R72%&	1.72	7	S, W, N, Z	B, D	S	P, R	DAL, SHA, TEP
RWR84#1R74%&	1.74	7	S, W, N, Z	B, D, F	S	P, R	DAL, SHA, TEP
RWR84#1R76%&	1.76	7	S, W, N, Z	B, D	S	P, R	DAL, SHA, TEP
RWR84#1R78%&	1.78	7	S, W, N, Z	B, D, F	S	P, R	DAL, SHA, TEP
RWR84#1R80%&	1.80	7	S, W, N, Z	B, D, F	S	P, R	DAL, SHA, TEP
RWR84#1R82%&	1.82	7	S, W, N, Z	B, D, F	S	P, R	DAL, SHA, TEP
RWR84#1R84#&	1.84	7	S, W, N, Z	B, D	S	P, R	DAL, SHA, TEP
RWR84#1R87%&	1.87	7	S, W, N, Z	B, D, F	S	P, R	DAL, SHA, TEP
RWR84#1R89%&	1.89	7	S, W, N, Z	B, D	S	P, R	DAL, SHA, TEP
	Resistance	Power	Terminal	Resistance	Level 1	Level 2	
Part Number	Value (Ohms)	Rating (W)	Characteristic (#)	Tolerance (%)	(FRL)(&)	(FRL)(&)	Manufacturer
RWR84#1R91%&	1.91	7	S, W, N, Z	B, D, F	S	P, R	DAL, SHA, TEP
RWR84#1R93%&	1.93	7	S, W, N, Z	B, D	S	P, R	DAL, SHA, TEP
RWR84#1R96%&	1.96	7	S, W, N, Z	B, D, F	S	P, R	DAL, SHA, TEP
RWR84#1R98%&	1.98	7	S, W, N, Z	B, D	S	P, R	DAL, SHA, TEP
RWR84#2R00%&	2.00	7	S, W, N, Z	B, D, F	S	P, R	DAL, SHA, TEP
RWR84#2R03%&	2.03	7	S, W, N, Z	B, D	S	P, R	DAL, SHA, TEP
RWR84#2R05%&	2.05	7	S, W, N, Z	B, D, F	S	P, R	DAL, SHA, TEP
RWR84#2R08%&	2.08	7	S, W, N, Z	B, D	S	P, R	DAL, SHA, TEP
RWR84#2R10%&	2.10	7	S, W, N, Z	B, D, F	S	P, R	DAL, SHA, TEP
RWR84#2R13%&	2.13	7	S, W, N, Z	B, D	S	P, R	DAL, SHA, TEP
RWR84#2R15%&	2.15	7	S, W, N, Z	B, D, F	S	P, R	DAL, SHA, TEP
RWR84#2R18%&	2.18	7	S, W, N, Z	B, D	S	P, R	DAL, SHA, TEP

RWR84#2R21%&	2.21	7	S, W, N, Z	B, D, F	S	P, R	DAL, SHA, TEP
RWR84#2R23%&	2.23	7	S, W, N, Z	B, D	S	P, R	DAL, SHA, TEP
	Resistance	Power	Terminal	Resistance	Level 1	Level 2	
Part Number	Value (Ohms)	Rating (W)	Characteristic (#)	Tolerance (%)	(FRL)(&)	(FRL)(&)	Manufacturer
RWR84#2R26%&	2.26	7	S, W, N, Z	B, D, F	S	P, R	DAL, SHA, TEP
RWR84#2R29%&	2.29	7	S, W, N, Z	B, D	S	P, R	DAL, SHA, TEP
RWR84#2R32%&	2.32	7	S, W, N, Z	B, D, F	S	P, R	DAL, SHA, TEP
RWR84#2R34%&	2.34	7	S, W, N, Z	B, D	S	P, R	DAL, SHA, TEP
RWR84#2R37%&	2.37	7	S, W, N, Z	B, D, F	S	P, R	DAL, SHA, TEP
RWR84#2R40%&	2.40	7	S, W, N, Z	B, D	S	P, R	DAL, SHA, TEP
RWR84#2R43%&	2.43	7	S, W, N, Z	B, D, F	S	P, R	DAL, SHA, TEP
RWR84#2R46%&	2.46	7	S, W, N, Z	B, D	S	P, R	DAL, SHA, TEP
RWR84#2R49%&	2.49	7	S, W, N, Z	B, D, F	S	P, R	DAL, SHA, TEP
RWR84#2R52%&	2.52	7	S, W, N, Z	B, D	S	P, R	DAL, SHA, TEP
RWR84#2R55%&	2.55	7	S, W, N, Z	B, D, F	S	P, R	DAL, SHA, TEP
RWR84#2R58%&	2.58	7	S, W, N, Z	B, D	S	P, R	DAL, SHA, TEP
RWR84#2R61%&	2.61	7	S, W, N, Z	B, D, F	S	P, R	DAL, SHA, TEP
RWR84#2R64%&	2.64	7	S, W, N, Z	B, D	S	P, R	DAL, SHA, TEP
	Resistance	Power	Terminal	Resistance	Level 1	Level 2	
Part Number	Value (Ohms)	Rating (W)	Characteristic (#)	Tolerance (%)	(FRL)(&)	(FRL)(&)	Manufacturer
RWR84#2R67%&	2.67	7	S, W, N, Z	B, D, F	S	P, R	DAL, SHA, TEP
RWR84#2R71%&	2.71	7	S, W, N, Z	B, D	S	P, R	DAL, SHA, TEP
RWR84#2R74%&	2.74	7	S, W, N, Z	B, D, F	S	P, R	DAL, SHA, TEP
RWR84#2R77%&	2.77	7	S, W, N, Z	B, D	S	P, R	DAL, SHA, TEP
RWR84#2R80%&	2.80	7	S, W, N, Z	B, D, F	S	P, R	DAL, SHA, TEP
RWR84#2R84#&	2.84	7	S, W, N, Z	B, D	S	P, R	DAL, SHA, TEP
RWR84#2R87%&	2.87	7	S, W, N, Z	B, D, F	S	P, R	DAL, SHA, TEP
RWR84#2R91%&	2.91	7	S, W, N, Z	B, D	S	P, R	DAL, SHA, TEP
RWR84#2R94%&	2.94	7	S, W, N, Z	B, D, F	S	P, R	DAL, SHA, TEP
RWR84#2R98%&	2.98	7	S, W, N, Z	B, D	S	P, R	DAL, SHA, TEP
RWR84#3R01%&	3.01	7	S, W, N, Z	B, D, F	S	P, R	DAL, SHA, TEP
RWR84#3R05%&	3.05	7	S, W, N, Z	B, D	S	P, R	DAL, SHA, TEP
RWR84#3R09%&	3.09	7	S, W, N, Z	B, D, F	S	P, R	DAL, SHA, TEP
RWR84#3R12%&	3.12	7	S, W, N, Z	B, D	S	P, R	DAL, SHA, TEP
	Resistance	Power	Terminal	Resistance	Level 1	Level 2	
Part Number	Value (Ohms)	Rating (W)	Characteristic (#)	Tolerance (%)	(FRL)(&)	(FRL)(&)	Manufacturer
RWR84#3R16%&	3.16	7	S, W, N, Z	B, D, F	S	P, R	DAL, SHA, TEP
RWR84#3R20%&	3.20	7	S, W, N, Z	B, D	S	P, R	DAL, SHA, TEP
RWR84#3R24%&	3.24	7	S, W, N, Z	B, D, F	S	P, R	DAL, SHA, TEP
RWR84#3R28%&	3.28	7	S, W, N, Z	B, D	S	P, R	DAL, SHA, TEP
RWR84#3R32%&	3.32	7	S, W, N, Z	B, D, F	S	P, R	DAL, SHA, TEP
RWR84#3R36%&	3.36	7	S, W, N, Z	B, D	S	P, R	DAL, SHA, TEP
RWR84#3R40%&	3.40	7	S, W, N, Z	B, D, F	S	P, R	DAL, SHA, TEP
RWR84#3R44%&	3.44	7	S, W, N, Z	B, D	S	P, R	DAL, SHA, TEP
RWR84#3R48%&	3.48	7	S, W, N, Z	B, D, F	S	P, R	DAL, SHA, TEP
RWR84#3R52%&	3.52	7	S, W, N, Z	B, D	S	P, R	DAL, SHA, TEP
RWR84#3R57%&	3.57	7	S, W, N, Z	B, D, F	S	P, R	DAL, SHA, TEP

RWR84#3R61%&	3.61	7	S, W, N, Z	B, D	S	P, R	DAL, SHA, TEP
RWR84#3R65%&	3.65	7	S, W, N, Z	B, D, F	S	P, R	DAL, SHA, TEP
RWR84#3R70%&	3.70	7	S, W, N, Z	B, D	S	P, R	DAL, SHA, TEP
	Resistance	Power	Terminal	Resistance	Level 1	Level 2	
Part Number	Value (Ohms)	Rating (W)	Characteristic (#)	Tolerance (%)	(FRL)(&)	(FRL)(&)	Manufacturer
RWR84#3R74%&	3.74	7	S, W, N, Z	B, D, F	S	P, R	DAL, SHA, TEP
RWR84#3R79%&	3.79	7	S, W, N, Z	B, D	S	P, R	DAL, SHA, TEP
RWR84#3R83%&	3.83	7	S, W, N, Z	B, D, F	S	P, R	DAL, SHA, TEP
RWR84#3R88%&	3.88	7	S, W, N, Z	B, D	S	P, R	DAL, SHA, TEP
RWR84#3R92%&	3.92	7	S, W, N, Z	B, D, F	S	P, R	DAL, SHA, TEP
RWR84#3R97%&	3.97	7	S, W, N, Z	B, D	S	P, R	DAL, SHA, TEP
RWR84#4R02%&	4.02	7	S, W, N, Z	B, D, F	S	P, R	DAL, SHA, TEP
RWR84#4R07%&	4.07	7	S, W, N, Z	B, D	S	P, R	DAL, SHA, TEP
RWR84#4R12%&	4.12	7	S, W, N, Z	B, D, F	S	P, R	DAL, SHA, TEP
RWR84#4R17%&	4.17	7	S, W, N, Z	B, D	S	P, R	DAL, SHA, TEP
RWR84#4R22%&	4.22	7	S, W, N, Z	B, D, F	S	P, R	DAL, SHA, TEP
RWR84#4R27%&	4.27	7	S, W, N, Z	B, D	S	P, R	DAL, SHA, TEP
RWR84#4R32%&	4.32	7	S, W, N, Z	B, D, F	S	P, R	DAL, SHA, TEP
RWR84#4R37%&	4.37	7	S, W, N, Z	B, D	S	P, R	DAL, SHA, TEP
	Resistance	Power	Terminal	Resistance	Level 1	Level 2	
Part Number	Value (Ohms)	Rating (W)	Characteristic (#)	Tolerance (%)	(FRL)(&)	(FRL)(&)	Manufacturer
RWR84#4R42%&	4.42	7	S, W, N, Z	B, D, F	S	P, R	DAL, SHA, TEP
RWR84#4R48%&	4.48	7	S, W, N, Z	B, D	S	P, R	DAL, SHA, TEP
RWR84#4R53%&	4.53	7	S, W, N, Z	B, D, F	S	P, R	DAL, SHA, TEP
RWR84#4R59%&	4.59	7	S, W, N, Z	B, D	S	P, R	DAL, SHA, TEP
RWR84#4R64%&	4.64	7	S, W, N, Z	B, D, F	S	P, R	DAL, SHA, TEP
RWR84#4R70%&	4.70	7	S, W, N, Z	B, D	S	P, R	DAL, SHA, TEP
RWR84#4R75%&	4.75	7	S, W, N, Z	B, D, F	S	P, R	DAL, SHA, TEP
RWR84#4R81%&	4.81	7	S, W, N, Z	B, D	S	P, R	DAL, SHA, TEP
RWR84#4R87%&	4.87	7	S, W, N, Z	B, D, F	S	P, R	DAL, SHA, TEP
RWR84#4R93%&	4.93	7	S, W, N, Z	B, D	S	P, R	DAL, SHA, TEP
RWR84#4R99%&	4.99	7	S, W, N, Z	B, D, F	S	P, R	DAL, SHA, TEP
RWR84#5R05%&	5.05	7	S, W, N, Z	B, D	S	P, R	DAL, SHA, TEP
RWR84#5R11%&	5.11	7	S, W, N, Z	B, D, F	S	P, R	DAL, SHA, TEP
RWR84#5R17%&	5.17	7	S, W, N, Z	B, D	S	P, R	DAL, SHA, TEP
	Resistance	Power	Terminal	Resistance	Level 1	Level 2	
Part Number	Value (Ohms)	Rating (W)	Characteristic (#)	Tolerance (%)	(FRL)(&)	(FRL)(&)	Manufacturer
RWR84#5R23%&	5.23	7	S, W, N, Z	B, D, F	S	P, R	DAL, SHA, TEP
RWR84#5R30%&	5.30	7	S, W, N, Z	B, D	S	P, R	DAL, SHA, TEP
RWR84#5R36%&	5.36	7	S, W, N, Z	B, D, F	S	P, R	DAL, SHA, TEP
RWR84#5R42%&	5.42	7	S, W, N, Z	B, D	S	P, R	DAL, SHA, TEP
RWR84#5R49%&	5.49	7	S, W, N, Z	B, D, F	S	P, R	DAL, SHA, TEP
RWR84#5R56%&	5.56	7	S, W, N, Z	B, D	S	P, R	DAL, SHA, TEP
RWR84#5R62%&	5.62	7	S, W, N, Z	B, D, F	S	P, R	DAL, SHA, TEP
RWR84#5R69%&	5.69	7	S, W, N, Z	B, D	S	P, R	DAL, SHA, TEP
RWR84#5R76%&	5.76	7	S, W, N, Z	B, D, F	S	P, R	DAL, SHA, TEP
RWR84#5R83%&	5.83	7	S, W, N, Z	B, D	S	P, R	DAL, SHA, TEP

RWR84#5R90%&	5.90	7	S, W, N, Z	B, D, F	S	P, R	DAL, SHA, TEP
RWR84#5R97%&	5.97	7	S, W, N, Z	B, D	S	P, R	DAL, SHA, TEP
RWR84#6R04%&	6.04	7	S, W, N, Z	B, D, F	S	P, R	DAL, SHA, TEP
RWR84#6R12%&	6.12	7	S, W, N, Z	B, D	S	P, R	DAL, SHA, TEP
	Resistance	Power	Terminal	Resistance	Level 1	Level 2	
Part Number	Value (Ohms)	Rating (W)	Characteristic (#)	Tolerance (%)	(FRL)(&)	(FRL)(&)	Manufacturer
RWR84#6R19%&	6.19	7	S, W, N, Z	B, D, F	S	P, R	DAL, SHA, TEP
RWR84#6R26%&	6.26	7	S, W, N, Z	B, D	S	P, R	DAL, SHA, TEP
RWR84#6R34%&	6.34	7	S, W, N, Z	B, D, F	S	P, R	DAL, SHA, TEP
RWR84#6R42%&	6.42	7	S, W, N, Z	B, D	S	P, R	DAL, SHA, TEP
RWR84#6R49%&	6.49	7	S, W, N, Z	B, D, F	S	P, R	DAL, SHA, TEP
RWR84#6R57%&	6.57	7	S, W, N, Z	B, D	S	P, R	DAL, SHA, TEP
RWR84#6R65%&	6.65	7	S, W, N, Z	B, D, F	S	P, R	DAL, SHA, TEP
RWR84#6R73%&	6.73	7	S, W, N, Z	B, D	S	P, R	DAL, SHA, TEP
RWR84#6R81%&	6.81	7	S, W, N, Z	B, D, F	S	P, R	DAL, SHA, TEP
RWR84#6R90%&	6.90	7	S, W, N, Z	B, D	S	P, R	DAL, SHA, TEP
RWR84#6R98%&	6.98	7	S, W, N, Z	B, D, F	S	P, R	DAL, SHA, TEP
RWR84#7R06%&	7.06	7	S, W, N, Z	B, D	S	P, R	DAL, SHA, TEP
RWR84#7R15%&	7.15	7	S, W, N, Z	B, D, F	S	P, R	DAL, SHA, TEP
RWR84#7R23%&	7.23	7	S, W, N, Z	B, D	S	P, R	DAL, SHA, TEP
	Resistance	Power	Terminal	Resistance	Level 1	Level 2	
Part Number	Value (Ohms)	Rating (W)	Characteristic (#)	Tolerance (%)	(FRL)(&)	(FRL)(&)	Manufacturer
RWR84#7R32%&	7.32	7	S, W, N, Z	B, D, F	S	P, R	DAL, SHA, TEP
RWR84#7R41%&	7.41	7	S, W, N, Z	B, D	S	P, R	DAL, SHA, TEP
RWR84#7R50%&	7.50	7	S, W, N, Z	B, D, F	S	P, R	DAL, SHA, TEP
RWR84#7R59%&	7.59	7	S, W, N, Z	B, D	S	P, R	DAL, SHA, TEP
RWR84#7R68%&	7.68	7	S, W, N, Z	B, D, F	S	P, R	DAL, SHA, TEP
RWR84#7R77%&	7.77	7	S, W, N, Z	B, D	S	P, R	DAL, SHA, TEP
RWR84#7R87%&	7.87	7	S, W, N, Z	B, D, F	S	P, R	DAL, SHA, TEP
RWR84#7R96%&	7.96	7	S, W, N, Z	B, D	S	P, R	DAL, SHA, TEP
RWR84#8R06%&	8.06	7	S, W, N, Z	B, D, F	S	P, R	DAL, SHA, TEP
RWR84#8R16%&	8.16	7	S, W, N, Z	B, D	S	P, R	DAL, SHA, TEP
RWR84#8R25%&	8.25	7	S, W, N, Z	B, D, F	S	P, R	DAL, SHA, TEP
RWR84#8R35%&	8.35	7	S, W, N, Z	B, D	S	P, R	DAL, SHA, TEP
RWR84#8R45%&	8.45	7	S, W, N, Z	B, D, F	S	P, R	DAL, SHA, TEP
RWR84#8R56%&	8.56	7	S, W, N, Z	B, D	S	P, R	DAL, SHA, TEP
	Resistance	Power	Terminal	Resistance	Level 1	Level 2	
Part Number	Value (Ohms)	Rating (W)	Characteristic (#)	Tolerance (%)	(FRL)(&)	(FRL)(&)	Manufacturer
RWR84#8R66%&	8.66	7	S, W, N, Z	B, D, F	S	P, R	DAL, SHA, TEP
RWR84#8R76%&	8.76	7	S, W, N, Z	B, D	S	P, R	DAL, SHA, TEP
RWR84#8R87%&	8.87	7	S, W, N, Z	B, D, F	S	P, R	DAL, SHA, TEP
RWR84#8R98%&	8.98	7	S, W, N, Z	B, D	S	P, R	DAL, SHA, TEP
RWR84#9R09%&	9.09	7	S, W, N, Z	B, D, F	S	P, R	DAL, SHA, TEP
RWR84#9R20%&	9.20	7	S, W, N, Z	B, D	S	P, R	DAL, SHA, TEP
RWR84#9R31%&	9.31	7	S, W, N, Z	B, D, F	S	P, R	DAL, SHA, TEP
RWR84#9R42%&	9.42	7	S, W, N, Z	B, D	S	P, R	DAL, SHA, TEP
RWR84#9R53%&	9.53	7	S, W, N, Z	B, D, F	S	P, R	DAL, SHA, TEP

RWR84#9R65%&	9.65	7	S, W, N, Z	B, D	S	P, R	DAL, SHA, TEP
RWR84#9R76%&	9.76	7	S, W, N, Z	B, D, F	S	P, R	DAL, SHA, TEP
RWR84#9R88%&	9.88	7	S, W, N, Z	B, D	S	P, R	DAL, SHA, TEP
	Resistance	Power	Terminal	Resistance	Level 1	Level 2	
Part Number	Value (Ohms)	Rating (W)	Characteristic (#)	Tolerance (%)	(FRL)(&)	(FRL)(&)	Manufacturer

RWR84 Wirewound Resistors: 10.0 Ohms through 98.8 Ohms

	Resistance	Power	Terminal	Resistance	Level 1	Level 2	
Part Number	Value (Ohms)	Rating (W)	Characteristic (#)	Tolerance (%)	(FRL)(&)	(FRL)(&)	Manufacturer
RWR84#10R0%&	10.0	7	S, W, N, Z	B, D, F	S	P, R	DAL, SHA, TEP
RWR84#10R1%&	10.1	7	S, W, N, Z	B, D	S	P, R	DAL, SHA, TEP
RWR84#10R2%&	10.2	7	S, W, N, Z	B, D, F	S	P, R	DAL, SHA, TEP
RWR84#10R4%&	10.4	7	S, W, N, Z	B, D	S	P, R	DAL, SHA, TEP
RWR84#10R5%&	10.5	7	S, W, N, Z	B, D, F	S	P, R	DAL, SHA, TEP
RWR84#10R6%&	10.6	7	S, W, N, Z	B, D	S	P, R	DAL, SHA, TEP
RWR84#10R7%&	10.7	7	S, W, N, Z	B, D, F	S	P, R	DAL, SHA, TEP
RWR84#10R9%&	10.9	7	S, W, N, Z	B, D	S	P, R	DAL, SHA, TEP
RWR84#11R0%&	11.0	7	S, W, N, Z	B, D, F	S	P, R	DAL, SHA, TEP
RWR84#11R1%&	11.1	7	S, W, N, Z	B, D	S	P, R	DAL, SHA, TEP
RWR84#11R3%&	11.3	7	S, W, N, Z	B, D, F	S	P, R	DAL, SHA, TEP
RWR84#11R4%&	11.4	7	S, W, N, Z	B, D	S	P, R	DAL, SHA, TEP
RWR84#11R5%&	11.5	7	S, W, N, Z	B, D, F	S	P, R	DAL, SHA, TEP
	Resistance	Power	Terminal	Resistance	Level 1	Level 2	
Part Number	Value (Ohms)	Rating (W)	Characteristic (#)	Tolerance (%)	(FRL)(&)	(FRL)(&)	Manufacturer
RWR84#11R7%&	11.7	7	S, W, N, Z	B, D	S	P, R	DAL, SHA, TEP
RWR84#11R8%&	11.8	7	S, W, N, Z	B, D, F	S	P, R	DAL, SHA, TEP
RWR84#12R0%&	12.0	7	S, W, N, Z	B, D	S	P, R	DAL, SHA, TEP
RWR84#12R1%&	12.1	7	S, W, N, Z	B, D, F	S	P, R	DAL, SHA, TEP
RWR84#12R3%&	12.3	7	S, W, N, Z	B, D	S	P, R	DAL, SHA, TEP
RWR84#12R4%&	12.4	7	S, W, N, Z	B, D, F	S	P, R	DAL, SHA, TEP
RWR84#12R6%&	12.6	7	S, W, N, Z	B, D	S	P, R	DAL, SHA, TEP
RWR84#12R7%&	12.7	7	S, W, N, Z	B, D, F	S	P, R	DAL, SHA, TEP
RWR84#12R9%&	12.9	7	S, W, N, Z	B, D	S	P, R	DAL, SHA, TEP
RWR84#13R0%&	13.0	7	S, W, N, Z	B, D, F	S	P, R	DAL, SHA, TEP
RWR84#13R2%&	13.2	7	S, W, N, Z	B, D	S	P, R	DAL, SHA, TEP
RWR84#13R3%&	13.3	7	S, W, N, Z	B, D, F	S	P, R	DAL, SHA, TEP
RWR84#13R5%&	13.5	7	S, W, N, Z	B, D	S	P, R	DAL, SHA, TEP
RWR84#13R7%&	13.7	7	S, W, N, Z	B, D, F	S	P, R	DAL, SHA, TEP
RWR84#13R8%&	13.8	7	S, W, N, Z	B, D	S	P, R	DAL, SHA, TEP
	Resistance	Power	Terminal	Resistance	Level 1	Level 2	
Part Number	Value (Ohms)	Rating (W)	Characteristic (#)	Tolerance (%)	(FRL)(&)	(FRL)(&)	Manufacturer
RWR84#14R0%&	14.0	7	S, W, N, Z	B, D, F	S	P, R	DAL, SHA, TEP
RWR84#14R2%&	14.2	7	S, W, N, Z	B, D	S	P, R	DAL, SHA, TEP
RWR84#14R3%&	14.3	7	S, W, N, Z	B, D, F	S	P, R	DAL, SHA, TEP

RWR84#14R5%&	14.5	7	S, W, N, Z	B, D	S	P, R	DAL, SHA, TEP
RWR84#14R7%&	14.7	7	S, W, N, Z	B, D, F	S	P, R	DAL, SHA, TEP
RWR84#14R9%&	14.9	7	S, W, N, Z	B, D	S	P, R	DAL, SHA, TEP
RWR84#15R0%&	15.0	7	S, W, N, Z	B, D, F	S	P, R	DAL, SHA, TEP
RWR84#15R2%&	15.2	7	S, W, N, Z	B, D	S	P, R	DAL, SHA, TEP
RWR84#15R4%&	15.4	7	S, W, N, Z	B, D, F	S	P, R	DAL, SHA, TEP
RWR84#15R6%&	15.6	7	S, W, N, Z	B, D	S	P, R	DAL, SHA, TEP
RWR84#15R8%&	15.8	7	S, W, N, Z	B, D, F	S	P, R	DAL, SHA, TEP
RWR84#16R0%&	16.0	7	S, W, N, Z	B, D	S	P, R	DAL, SHA, TEP
	Resistance	Power	Terminal	Resistance	Level 1	Level 2	
Part Number	Value (Ohms)	Rating (W)	Characteristic (#)	Tolerance (%)	(FRL)(&)	(FRL)(&)	Manufacturer
RWR84#16R2%&	16.2	7	S, W, N, Z	B, D, F	S	P, R	DAL, SHA, TEP
RWR84#16R4%&	16.4	7	S, W, N, Z	B, D	S	P, R	DAL, SHA, TEP
RWR84#16R5%&	16.5	7	S, W, N, Z	B, D, F	S	P, R	DAL, SHA, TEP
RWR84#16R7%&	16.7	7	S, W, N, Z	B, D	S	P, R	DAL, SHA, TEP
RWR84#16R9%&	16.9	7	S, W, N, Z	B, D, F	S	P, R	DAL, SHA, TEP
RWR84#17R2%&	17.2	7	S, W, N, Z	B, D	S	P, R	DAL, SHA, TEP
RWR84#17R4%&	17.4	7	S, W, N, Z	B, D, F	S	P, R	DAL, SHA, TEP
RWR84#17R6%&	17.6	7	S, W, N, Z	B, D	S	P, R	DAL, SHA, TEP
RWR84#17R8%&	17.8	7	S, W, N, Z	B, D, F	S	P, R	DAL, SHA, TEP
RWR84#18R0%&	18.0	7	S, W, N, Z	B, D, F	S	P, R	DAL, SHA, TEP
RWR84#18R2%&	18.2	7	S, W, N, Z	B, D, F	S	P, R	DAL, SHA, TEP
RWR84#18R4%&	18.4	7	S, W, N, Z	B, D	S	P, R	DAL, SHA, TEP
RWR84#18R7%&	18.7	7	S, W, N, Z	B, D, F	S	P, R	DAL, SHA, TEP
RWR84#18R9%&	18.9	7	S, W, N, Z	B, D	S	P, R	DAL, SHA, TEP
	Resistance	Power	Terminal	Resistance	Level 1	Level 2	
Part Number	Value (Ohms)	Rating (W)	Characteristic (#)	Tolerance (%)	(FRL)(&)	(FRL)(&)	Manufacturer
RWR84#19R1%&	19.1	7	S, W, N, Z	B, D, F	S	P, R	DAL, SHA, TEP
RWR84#19R3%&	19.3	7	S, W, N, Z	B, D	S	P, R	DAL, SHA, TEP
RWR84#19R6%&	19.6	7	S, W, N, Z	B, D, F	S	P, R	DAL, SHA, TEP
RWR84#19R8%&	19.8	7	S, W, N, Z	B, D	S	P, R	DAL, SHA, TEP
RWR84#20R0%&	20.0	7	S, W, N, Z	B, D, F	S	P, R	DAL, SHA, TEP
RWR84#20R3%&	20.3	7	S, W, N, Z	B, D	S	P, R	DAL, SHA, TEP
RWR84#20R5%&	20.5	7	S, W, N, Z	B, D, F	S	P, R	DAL, SHA, TEP
RWR84#20R8%&	20.8	7	S, W, N, Z	B, D	S	P, R	DAL, SHA, TEP
RWR84#21R0%&	21.0	7	S, W, N, Z	B, D, F	S	P, R	DAL, SHA, TEP
RWR84#21R3%&	21.3	7	S, W, N, Z	B, D	S	P, R	DAL, SHA, TEP
RWR84#21R5%&	21.5	7	S, W, N, Z	B, D, F	S	P, R	DAL, SHA, TEP
RWR84#21R8%&	21.8	7	S, W, N, Z	B, D	S	P, R	DAL, SHA, TEP
RWR84#22R1%&	22.1	7	S, W, N, Z	B, D, F	S	P, R	DAL, SHA, TEP
RWR84#22R3%&	22.3	7	S, W, N, Z	B, D	S	P, R	DAL, SHA, TEP
	Resistance	Power	Terminal	Resistance	Level 1	Level 2	
Part Number	Value (Ohms)	Rating (W)	Characteristic (#)	Tolerance (%)	(FRL)(&)	(FRL)(&)	Manufacturer
RWR84#22R6%&	22.6	7	S, W, N, Z	B, D, F	S	P, R	DAL, SHA, TEP
RWR84#22R9%&	22.9	7	S, W, N, Z	B, D	S	P, R	DAL, SHA, TEP
RWR84#23R2%&	23.2	7	S, W, N, Z	B, D, F	S	P, R	DAL, SHA, TEP
RWR84#23R4%&	23.4	7	S, W, N, Z	B, D	S	P, R	DAL, SHA, TEP

RWR84#23R7%&	23.7	7	S, W, N, Z	B, D, F	S	P, R	DAL, SHA, TEP
RWR84#24R0%&	24.0	7	S, W, N, Z	B, D	S	P, R	DAL, SHA, TEP
RWR84#24R3%&	24.3	7	S, W, N, Z	B, D, F	S	P, R	DAL, SHA, TEP
RWR84#24R6%&	24.6	7	S, W, N, Z	B, D	S	P, R	DAL, SHA, TEP
RWR84#24R9%&	24.9	7	S, W, N, Z	B, D, F	S	P, R	DAL, SHA, TEP
RWR84#25R2%&	25.2	7	S, W, N, Z	B, D	S	P, R	DAL, SHA, TEP
RWR84#25R5%&	25.5	7	S, W, N, Z	B, D, F	S	P, R	DAL, SHA, TEP
RWR84#25R8%&	25.8	7	S, W, N, Z	B, D	S	P, R	DAL, SHA, TEP
RWR84#26R1%&	26.1	7	S, W, N, Z	B, D, F	S	P, R	DAL, SHA, TEP
RWR84#26R4%&	26.4	7	S, W, N, Z	B, D	S	P, R	DAL, SHA, TEP
	Resistance	Power	Terminal	Resistance	Level 1	Level 2	
Part Number	Value (Ohms)	Rating (W)	Characteristic (#)	Tolerance (%)	(FRL)(&)	(FRL)(&)	Manufacturer
RWR84#26R7%&	26.7	7	S, W, N, Z	B, D, F	S	P, R	DAL, SHA, TEP
RWR84#27R1%&	27.1	7	S, W, N, Z	B, D	S	P, R	DAL, SHA, TEP
RWR84#27R4%&	27.4	7	S, W, N, Z	B, D, F	S	P, R	DAL, SHA, TEP
RWR84#27R7%&	27.7	7	S, W, N, Z	B, D	S	P, R	DAL, SHA, TEP
RWR84#28R0%&	28.0	7	S, W, N, Z	B, D, F	S	P, R	DAL, SHA, TEP
RWR84#28R4%&	28.4	7	S, W, N, Z	B, D	S	P, R	DAL, SHA, TEP
RWR84#28R7%&	28.7	7	S, W, N, Z	B, D, F	S	P, R	DAL, SHA, TEP
RWR84#29R1%&	29.1	7	S, W, N, Z	B, D	S	P, R	DAL, SHA, TEP
RWR84#29R4%&	29.4	7	S, W, N, Z	B, D, F	S	P, R	DAL, SHA, TEP
RWR84#29R8%&	29.8	7	S, W, N, Z	B, D	S	P, R	DAL, SHA, TEP
RWR84#30R1%&	30.1	7	S, W, N, Z	B, D, F	S	P, R	DAL, SHA, TEP
RWR84#30R5%&	30.5	7	S, W, N, Z	B, D	S	P, R	DAL, SHA, TEP
RWR84#30R9%&	30.9	7	S, W, N, Z	B, D, F	S	P, R	DAL, SHA, TEP
RWR84#31R2%&	31.2	7	S, W, N, Z	B, D	S	P, R	DAL, SHA, TEP
	Resistance	Power	Terminal	Resistance	Level 1	Level 2	
Part Number	Value (Ohms)	Rating (W)	Characteristic (#)	Tolerance (%)	(FRL)(&)	(FRL)(&)	Manufacturer
RWR84#31R6%&	31.6	7	S, W, N, Z	B, D, F	S	P, R	DAL, SHA, TEP
RWR84#32R0%&	32.0	7	S, W, N, Z	B, D	S	P, R	DAL, SHA, TEP
RWR84#32R4%&	32.4	7	S, W, N, Z	B, D, F	S	P, R	DAL, SHA, TEP
RWR84#32R8%&	32.8	7	S, W, N, Z	B, D	S	P, R	DAL, SHA, TEP
RWR84#33R2%&	33.2	7	S, W, N, Z	B, D, F	S	P, R	DAL, SHA, TEP
RWR84#33R6%&	33.6	7	S, W, N, Z	B, D	S	P, R	DAL, SHA, TEP
RWR84#34R0%&	34.0	7	S, W, N, Z	B, D, F	S	P, R	DAL, SHA, TEP
RWR84#34R4%&	34.4	7	S, W, N, Z	B, D	S	P, R	DAL, SHA, TEP
RWR84#34R8%&	34.8	7	S, W, N, Z	B, D, F	S	P, R	DAL, SHA, TEP
RWR84#35R2%&	35.2	7	S, W, N, Z	B, D	S	P, R	DAL, SHA, TEP
RWR84#35R7%&	35.7	7	S, W, N, Z	B, D, F	S	P, R	DAL, SHA, TEP
RWR84#36R1%&	36.1	7	S, W, N, Z	B, D	S	P, R	DAL, SHA, TEP
RWR84#36R5%&	36.5	7	S, W, N, Z	B, D, F	S	P, R	DAL, SHA, TEP
RWR84#37R0%&	37.0	7	S, W, N, Z	B, D	S	P, R	DAL, SHA, TEP
	Resistance	Power	Terminal	Resistance	Level 1	Level 2	
Part Number	Value (Ohms)	Rating (W)	Characteristic (#)	Tolerance (%)	(FRL)(&)	(FRL)(&)	Manufacturer
RWR84#37R4%&	37.4	7	S, W, N, Z	B, D, F	S	P, R	DAL, SHA, TEP
RWR84#37R9%&	37.9	7	S, W, N, Z	B, D	S	P, R	DAL, SHA, TEP
RWR84#38R3%&	38.3	7	S, W, N, Z	B, D, F	S	P, R	DAL, SHA, TEP

RWR84#38R8%&	38.8	7	S, W, N, Z	B, D	S	P, R	DAL, SHA, TEP
RWR84#39R2%&	39.2	7	S, W, N, Z	B, D, F	S	P, R	DAL, SHA, TEP
RWR84#39R7%&	39.7	7	S, W, N, Z	B, D	S	P, R	DAL, SHA, TEP
RWR84#40R2%&	40.2	7	S, W, N, Z	B, D, F	S	P, R	DAL, SHA, TEP
RWR84#40R7%&	40.7	7	S, W, N, Z	B, D	S	P, R	DAL, SHA, TEP
RWR84#41R2%&	41.2	7	S, W, N, Z	B, D, F	S	P, R	DAL, SHA, TEP
RWR84#41R7%&	41.7	7	S, W, N, Z	B, D	S	P, R	DAL, SHA, TEP
RWR84#42R2%&	42.2	7	S, W, N, Z	B, D, F	S	P, R	DAL, SHA, TEP
RWR84#42R7%&	42.7	7	S, W, N, Z	B, D	S	P, R	DAL, SHA, TEP
RWR84#43R2%&	43.2	7	S, W, N, Z	B, D, F	S	P, R	DAL, SHA, TEP
RWR84#43R7%&	43.7	7	S, W, N, Z	B, D	S	P, R	DAL, SHA, TEP
	Resistance	Power	Terminal	Resistance	Level 1	Level 2	
Part Number	Value (Ohms)	Rating (W)	Characteristic (#)	Tolerance (%)	(FRL)(&)	(FRL)(&)	Manufacturer
RWR84#44R2%&	44.2	7	S, W, N, Z	B, D, F	S	P, R	DAL, SHA, TEP
RWR84#44R8%&	44.8	7	S, W, N, Z	B, D	S	P, R	DAL, SHA, TEP
RWR84#45R3%&	45.3	7	S, W, N, Z	B, D, F	S	P, R	DAL, SHA, TEP
RWR84#45R9%&	45.9	7	S, W, N, Z	B, D	S	P, R	DAL, SHA, TEP
RWR84#46R4%&	46.4	7	S, W, N, Z	B, D, F	S	P, R	DAL, SHA, TEP
RWR84#47R0%&	47.0	7	S, W, N, Z	B, D	S	P, R	DAL, SHA, TEP
RWR84#47R5%&	47.5	7	S, W, N, Z	B, D, F	S	P, R	DAL, SHA, TEP
RWR84#48R1%&	48.1	7	S, W, N, Z	B, D	S	P, R	DAL, SHA, TEP
RWR84#48R7%&	48.7	7	S, W, N, Z	B, D, F	S	P, R	DAL, SHA, TEP
RWR84#49R3%&	49.3	7	S, W, N, Z	B, D	S	P, R	DAL, SHA, TEP
RWR84#49R9%&	49.9	7	S, W, N, Z	B, D, F	S	P, R	DAL, SHA, TEP
RWR84#50R5%&	50.5	7	S, W, N, Z	B, D	S	P, R	DAL, SHA, TEP
RWR84#51R1%&	51.1	7	S, W, N, Z	B, D, F	S	P, R	DAL, SHA, TEP
RWR84#51R7%&	51.7	7	S, W, N, Z	B, D	S	P, R	DAL, SHA, TEP
	Resistance	Power	Terminal	Resistance	Level 1	Level 2	
Part Number	Value (Ohms)	Rating (W)	Characteristic (#)	Tolerance (%)	(FRL)(&)	(FRL)(&)	Manufacturer
RWR84#52R3%&	52.3	7	S, W, N, Z	B, D, F	S	P, R	DAL, SHA, TEP
RWR84#53R0%&	53.0	7	S, W, N, Z	B, D	S	P, R	DAL, SHA, TEP
RWR84#53R6%&	53.6	7	S, W, N, Z	B, D, F	S	P, R	DAL, SHA, TEP
RWR84#54R2%&	54.2	7	S, W, N, Z	B, D	S	P, R	DAL, SHA, TEP
RWR84#54R9%&	54.9	7	S, W, N, Z	B, D, F	S	P, R	DAL, SHA, TEP
RWR84#55R6%&	55.6	7	S, W, N, Z	B, D	S	P, R	DAL, SHA, TEP
RWR84#56R2%&	56.2	7	S, W, N, Z	B, D, F	S	P, R	DAL, SHA, TEP
RWR84#56R9%&	56.9	7	S, W, N, Z	B, D	S	P, R	DAL, SHA, TEP
RWR84#57R6%&	57.6	7	S, W, N, Z	B, D, F	S	P, R	DAL, SHA, TEP
RWR84#58R3%&	58.3	7	S, W, N, Z	B, D	S	P, R	DAL, SHA, TEP
RWR84#59R0%&	59.0	7	S, W, N, Z	B, D, F	S	P, R	DAL, SHA, TEP
RWR84#59R7%&	59.7	7	S, W, N, Z	B, D	S	P, R	DAL, SHA, TEP
RWR84#60R4%&	60.4	7	S, W, N, Z	B, D, F	S	P, R	DAL, SHA, TEP
RWR84#61R2%&	61.2	7	S, W, N, Z	B, D	S	P, R	DAL, SHA, TEP
	Resistance	Power	Terminal	Resistance	Level 1	Level 2	
Part Number	Value (Ohms)	Rating (W)	Characteristic (#)	Tolerance (%)	(FRL)(&)	(FRL)(&)	Manufacturer
RWR84#61R9%&	61.9	7	S, W, N, Z	B, D, F	S	P, R	DAL, SHA, TEP
RWR84#62R6%&	62.6	7	S, W, N, Z	B, D	S	P, R	DAL, SHA, TEP

RWR84#63R4%&	63.4	7	S, W, N, Z	B, D, F	S	P, R	DAL, SHA, TEP
RWR84#64R2%&	64.2	7	S, W, N, Z	B, D	S	P, R	DAL, SHA, TEP
RWR84#64R9%&	64.9	7	S, W, N, Z	B, D, F	S	P, R	DAL, SHA, TEP
RWR84#65R7%&	65.7	7	S, W, N, Z	B, D	S	P, R	DAL, SHA, TEP
RWR84#66R5%&	66.5	7	S, W, N, Z	B, D, F	S	P, R	DAL, SHA, TEP
RWR84#67R3%&	67.3	7	S, W, N, Z	B, D	S	P, R	DAL, SHA, TEP
RWR84#68R1%&	68.1	7	S, W, N, Z	B, D, F	S	P, R	DAL, SHA, TEP
RWR84#69R0%&	69.0	7	S, W, N, Z	B, D	S	P, R	DAL, SHA, TEP
RWR84#69R8%&	69.8	7	S, W, N, Z	B, D, F	S	P, R	DAL, SHA, TEP
RWR84#70R6%&	70.6	7	S, W, N, Z	B, D	S	P, R	DAL, SHA, TEP
RWR84#71R5%&	71.5	7	S, W, N, Z	B, D, F	S	P, R	DAL, SHA, TEP
RWR84#72R3%&	72.3	7	S, W, N, Z	B, D	S	P, R	DAL, SHA, TEP
	Resistance	Power	Terminal	Resistance	Level 1	Level 2	
Part Number	Value (Ohms)	Rating (W)	Characteristic (#)	Tolerance (%)	(FRL)(&)	(FRL)(&)	Manufacturer
RWR84#73R2%&	73.2	7	S, W, N, Z	B, D, F	S	P, R	DAL, SHA, TEP
RWR84#74R1%&	74.1	7	S, W, N, Z	B, D	S	P, R	DAL, SHA, TEP
RWR84#75R0%&	75.0	7	S, W, N, Z	B, D, F	S	P, R	DAL, SHA, TEP
RWR84#75R9%&	75.9	7	S, W, N, Z	B, D	S	P, R	DAL, SHA, TEP
RWR84#76R8%&.	76.8	7	S, W, N, Z	B, D, F	S	P, R	DAL, SHA, TEP
RWR84#77R7%&.	77.7	7	S, W, N, Z	B, D	S	P, R	DAL, SHA, TEP
RWR84#78R7%&	78.7	7	S, W, N, Z	B, D, F	S	P, R	DAL, SHA, TEP
RWR84#79R6%&	79.6	7	S, W, N, Z	B, D	S	P, R	DAL, SHA, TEP
RWR84#80R6%&	80.6	7	S, W, N, Z	B, D, F	S	P, R	DAL, SHA, TEP
RWR84#81R6%&	81.6	7	S, W, N, Z	B, D	S	P, R	DAL, SHA, TEP
RWR84#82R5%&	82.5	7	S, W, N, Z	B, D, F	S	P, R	DAL, SHA, TEP
RWR84#83R5%&	83.5	7	S, W, N, Z	B, D	S	P, R	DAL, SHA, TEP
	Resistance	Power	Terminal	Resistance	Level 1	Level 2	
Part Number	Value (Ohms)	Rating (W)	Characteristic (#)	Tolerance (%)	(FRL)(&)	(FRL)(&)	Manufacturer
RWR84#84R5%&	84.5	7	S, W, N, Z	B, D, F	S	P, R	DAL, SHA, TEP
RWR84#85R6%&	85.6	7	S, W, N, Z	B, D	S	P, R	DAL, SHA, TEP
RWR84#86R6%&	86.6	7	S, W, N, Z	B, D, F	S	P, R	DAL, SHA, TEP
RWR84#87R6%&	87.6	7	S, W, N, Z	B, D	S	P, R	DAL, SHA, TEP
RWR84#88R7%&	88.7	7	S, W, N, Z	B, D, F	S	P, R	DAL, SHA, TEP
RWR84#89R8%&	89.8	7	S, W, N, Z	B, D	S	P, R	DAL, SHA, TEP
RWR84#90R9%&	90.9	7	S, W, N, Z	B, D, F	S	P, R	DAL, SHA, TEP
RWR84#92R0%&	92.0	7	S, W, N, Z	B, D	S	P, R	DAL, SHA, TEP
RWR84#93R1%&	93.1	7	S, W, N, Z	B, D, F	S	P, R	DAL, SHA, TEP
RWR84#94R2%&	94.2	7	S, W, N, Z	B, D	S	P, R	DAL, SHA, TEP
RWR84#95R3%&	95.3	7	S, W, N, Z	B, D, F	S	P, R	DAL, SHA, TEP
RWR84#96R5%&	96.5	7	S, W, N, Z	B, D	S	P, R	DAL, SHA, TEP
RWR84#97R6%&	97.6	7	S, W, N, Z	B, D, F	S	P, R	DAL, SHA, TEP
RWR84#98R8%&	98.8	7	S, W, N, Z	B, D	S	P, R	DAL, SHA, TEP
	Resistance	Power	Terminal	Resistance	Level 1	Level 2	
Part Number	Value (Ohms)	Rating (W)	Characteristic (#)	Tolerance (%)	(FRL)(&)	(FRL)(&)	Manufacturer

	Resistance	Power	Terminal	Resistance	Level 1	Level 2	
Part Number	Value (Ohms)	Rating (W)	Characteristic (#)	Tolerance (%)	(FRL)(&)	(FRL)(&)	Manufacturer
RWR84#1000%&	100	7	S, W, N, Z	B, D, F	S	P, R	DAL, SHA, TEP
RWR84#1010%&	101	7	S, W, N, Z	B, D	S	P, R	DAL, SHA, TEP
RWR84#1020%&	102	7	S, W, N, Z	B, D, F	S	P, R	DAL, SHA, TEP
RWR84#1040%&	104	7	S, W, N, Z	B, D	S	P, R	DAL, SHA, TEP
RWR84#1050%&	105	7	S, W, N, Z	B, D, F	S	P, R	DAL, SHA, TEP
RWR84#1060%&	106	7	S, W, N, Z	B, D	S	P, R	DAL, SHA, TEP
RWR84#1070%&	107	7	S, W, N, Z	B, D, F	S	P, R	DAL, SHA, TEP
RWR84#1090%&	109	7	S, W, N, Z	B, D	S	P, R	DAL, SHA, TEP
RWR84#1100%&	110	7	S, W, N, Z	B, D, F	S	P, R	DAL, SHA, TEP
RWR84#1110%&	111	7	S, W, N, Z	B, D	S	P, R	DAL, SHA, TEP
RWR84#1130%&	113	7	S, W, N, Z	B, D, F	S	P, R	DAL, SHA, TEP
RWR84#1140%&	114	7	S, W, N, Z	B, D	S	P, R	DAL, SHA, TEP
RWR84#1150%&	115	7	S, W, N, Z	B, D, F	S	P, R	DAL, SHA, TEP
	Resistance	Power	Terminal	Resistance	Level 1	Level 2	
Part Number	Value (Ohms)	Rating (W)	Characteristic (#)	Tolerance (%)	(FRL)(&)	(FRL)(&)	Manufacturer
RWR84#1170%&	117	7	S, W, N, Z	B, D	S	P, R	DAL, SHA, TEP
RWR84#1180%&	118	7	S, W, N, Z	B, D, F	S	P, R	DAL, SHA, TEP
RWR84#1200%&	120	7	S, W, N, Z	B, D	S	P, R	DAL, SHA, TEP
RWR84#1210%&	121	7	S, W, N, Z	B, D, F	S	P, R	DAL, SHA, TEP
RWR84#1230%&	123	7	S, W, N, Z	B, D	S	P, R	DAL, SHA, TEP
RWR84#1240%&	124	7	S, W, N, Z	B, D, F	S	P, R	DAL, SHA, TEP
RWR84#1260%&	126	7	S, W, N, Z	B, D	S	P, R	DAL, SHA, TEP
RWR84#1270%&	127	7	S, W, N, Z	B, D, F	S	P, R	DAL, SHA, TEP
RWR84#1290%&	129	7	S, W, N, Z	B, D	S	P, R	DAL, SHA, TEP
RWR84#1300%&	130	7	S, W, N, Z	B, D, F	S	P, R	DAL, SHA, TEP
RWR84#1320%&	132	7	S, W, N, Z	B, D	S	P, R	DAL, SHA, TEP
RWR84#1330%&	133	7	S, W, N, Z	B, D, F	S	P, R	DAL, SHA, TEP
RWR84#1350%&	135	7	S, W, N, Z	B, D	S	P, R	DAL, SHA, TEP
RWR84#1370%&	137	7	S, W, N, Z	B, D, F	S	P, R	DAL, SHA, TEP
RWR84#1380%&	138	7	S, W, N, Z	B, D	S	P, R	DAL, SHA, TEP
	Resistance	Power	Terminal	Resistance	Level 1	Level 2	
Part Number	Value (Ohms)	Rating (W)	Characteristic (#)	Tolerance (%)	(FRL)(&)	(FRL)(&)	Manufacturer
RWR84#1400%&	140	7	S, W, N, Z	B, D, F	S	P, R	DAL, SHA, TEP
RWR84#1420%&	142	7	S, W, N, Z	B, D	S	P, R	DAL, SHA, TEP
RWR84#1430%&	143	7	S, W, N, Z	B, D, F	S	P, R	DAL, SHA, TEP
RWR84#1450%&	145	7	S, W, N, Z	B, D	S	P, R	DAL, SHA, TEP
RWR84#1470%&	147	7	S, W, N, Z	B, D, F	S	P, R	DAL, SHA, TEP
RWR84#1490%&	149	7	S, W, N, Z	B, D	S	P, R	DAL, SHA, TEP
RWR84#1500%&	150	7	S, W, N, Z	B, D, F	S	P, R	DAL, SHA, TEP
RWR84#1520%&	152	7	S, W, N, Z	B, D	S	P, R	DAL, SHA, TEP
RWR84#1540%&	154	7	S, W, N, Z	B, D, F	S	P, R	DAL, SHA, TEP
RWR84#1560%&	156	7	S, W, N, Z	B, D	S	P, R	DAL, SHA, TEP
RWR84#1580%&	158	7	S, W, N, Z	B, D, F	S	P, R	DAL, SHA, TEP

RWR84#1600%&	160	7	S, W, N, Z	B, D	S	P, R	DAL, SHA, TEP
	Resistance	Power	Terminal	Resistance	Level 1	Level 2	
Part Number	Value (Ohms)	Rating (W)	Characteristic (#)	Tolerance (%)	(FRL)(&)	(FRL)(&)	Manufacturer
RWR84#1620%&	162	7	S, W, N, Z	B, D, F	S	P, R	DAL, SHA, TEP
RWR84#1640%&	164	7	S, W, N, Z	B, D	S	P, R	DAL, SHA, TEP
RWR84#1650%&	165	7	S, W, N, Z	B, D, F	S	P, R	DAL, SHA, TEP
RWR84#1670%&	167	7	S, W, N, Z	B, D	S	P, R	DAL, SHA, TEP
RWR84#1690%&	169	7	S, W, N, Z	B, D, F	S	P, R	DAL, SHA, TEP
RWR84#1720%&	172	7	S, W, N, Z	B, D	S	P, R	DAL, SHA, TEP
RWR84#1740%&	174	7	S, W, N, Z	B, D, F	S	P, R	DAL, SHA, TEP
RWR84#1760%&	176	7	S, W, N, Z	B, D	S	P, R	DAL, SHA, TEP
RWR84#1780%&	178	7	S, W, N, Z	B, D, F	S	P, R	DAL, SHA, TEP
RWR84#1800%&	180	7	S, W, N, Z	B, D, F	S	P, R	DAL, SHA, TEP
RWR84#1820%&	182	7	S, W, N, Z	B, D, F	S	P, R	DAL, SHA, TEP
RWR84#1840%&	184	7	S, W, N, Z	B, D	S	P, R	DAL, SHA, TEP
RWR84#1870%&	187	7	S, W, N, Z	B, D, F	S	P, R	DAL, SHA, TEP
RWR84#1890%&	189	7	S, W, N, Z	B, D	S	P, R	DAL, SHA, TEP
	Resistance	Power	Terminal	Resistance	Level 1	Level 2	
Part Number	Value (Ohms)	Rating (W)	Characteristic (#)	Tolerance (%)	(FRL)(&)	(FRL)(&)	Manufacturer
RWR84#1910%&	191	7	S, W, N, Z	B, D, F	S	P, R	DAL, SHA, TEP
RWR84#1930%&	193	7	S, W, N, Z	B, D	S	P, R	DAL, SHA, TEP
RWR84#1960%&	196	7	S, W, N, Z	B, D, F	S	P, R	DAL, SHA, TEP
RWR84#1980%&	198	7	S, W, N, Z	B, D	S	P, R	DAL, SHA, TEP
RWR84#2000%&	200	7	S, W, N, Z	B, D, F	S	P, R	DAL, SHA, TEP
RWR84#2030%&	203	7	S, W, N, Z	B, D	S	P, R	DAL, SHA, TEP
RWR84#2050%&	205	7	S, W, N, Z	B, D, F	S	P, R	DAL, SHA, TEP
RWR84#2080%&	208	7	S, W, N, Z	B, D	S	P, R	DAL, SHA, TEP
RWR84#2100%&	210	7	S, W, N, Z	B, D, F	S	P, R	DAL, SHA, TEP
RWR84#2130%&	213	7	S, W, N, Z	B, D	S	P, R	DAL, SHA, TEP
RWR84#2150%&	215	7	S, W, N, Z	B, D, F	S	P, R	DAL, SHA, TEP
RWR84#2180%&	218	7	S, W, N, Z	B, D	S	P, R	DAL, SHA, TEP
RWR84#2210%&	221	7	S, W, N, Z	B, D, F	S	P, R	DAL, SHA, TEP
RWR84#2230%&	223	7	S, W, N, Z	B, D	S	P, R	DAL, SHA, TEP
	Resistance	Power	Terminal	Resistance	Level 1	Level 2	
Part Number	Value (Ohms)	Rating (W)	Characteristic (#)	Tolerance (%)	(FRL)(&)	(FRL)(&)	Manufacturer
RWR84#2260%&	226	7	S, W, N, Z	B, D, F	S	P, R	DAL, SHA, TEP
RWR84#2290%&	229	7	S, W, N, Z	B, D	S	P, R	DAL, SHA, TEP
RWR84#2320%&	232	7	S, W, N, Z	B, D, F	S	P, R	DAL, SHA, TEP
RWR84#2340%&	234	7	S, W, N, Z	B, D	S	P, R	DAL, SHA, TEP
RWR84#2370%&	237	7	S, W, N, Z	B, D, F	S	P, R	DAL, SHA, TEP
RWR84#2400%&	240	7	S, W, N, Z	B, D	S	P, R	DAL, SHA, TEP
RWR84#2430%&	243	7	S, W, N, Z	B, D, F	S	P, R	DAL, SHA, TEP
RWR84#2460%&	246	7	S, W, N, Z	B, D	S	P, R	DAL, SHA, TEP
RWR84#2490%&	249	7	S, W, N, Z	B, D, F	S	P, R	DAL, SHA, TEP
RWR84#2520%&	252	7	S, W, N, Z	B, D	S	P, R	DAL, SHA, TEP
RWR84#2550%&	255	7	S, W, N, Z	B, D, F	S	P, R	DAL, SHA, TEP
RWR84#2580%&	258	7	S, W, N, Z	B, D	S	P, R	DAL, SHA, TEP

RWR84#2610%&	261	7	S, W, N, Z	B, D, F	S	P, R	DAL, SHA, TEP
RWR84#2640%&	264	7	S, W, N, Z	B, D	S	P, R	DAL, SHA, TEP
	Resistance	Power	Terminal	Resistance	Level 1	Level 2	
Part Number	Value (Ohms)	Rating (W)	Characteristic (#)	Tolerance (%)	(FRL)(&)	(FRL)(&)	Manufacturer
RWR84#2670%&	267	7	S, W, N, Z	B, D, F	S	P, R	DAL, SHA, TEP
RWR84#2710%&	271	7	S, W, N, Z	B, D	S	P, R	DAL, SHA, TEP
RWR84#2740%&	274	7	S, W, N, Z	B, D, F	S	P, R	DAL, SHA, TEP
RWR84#2770%&	277	7	S, W, N, Z	B, D	S	P, R	DAL, SHA, TEP
RWR84#2800%&	280	7	S, W, N, Z	B, D, F	S	P, R	DAL, SHA, TEP
RWR84#2840%&	284	7	S, W, N, Z	B, D	S	P, R	DAL, SHA, TEP
RWR84#2870%&	287	7	S, W, N, Z	B, D, F	S	P, R	DAL, SHA, TEP
RWR84#2910%&	291	7	S, W, N, Z	B, D	S	P, R	DAL, SHA, TEP
RWR84#2940%&	294	7	S, W, N, Z	B, D, F	S	P, R	DAL, SHA, TEP
RWR84#2980%&	298	7	S, W, N, Z	B, D	S	P, R	DAL, SHA, TEP
RWR84#3010%&	301	7	S, W, N, Z	B, D, F	S	P, R	DAL, SHA, TEP
RWR84#3050%&	305	7	S, W, N, Z	B, D	S	P, R	DAL, SHA, TEP
RWR84#3090%&	309	7	S, W, N, Z	B, D, F	S	P, R	DAL, SHA, TEP
RWR84#3120%&	312	7	S, W, N, Z	B, D	S	P, R	DAL, SHA, TEP
	Resistance	Power	Terminal	Resistance	Level 1	Level 2	
Part Number	Value (Ohms)	Rating (W)	Characteristic (#)	Tolerance (%)	(FRL)(&)	(FRL)(&)	Manufacturer
RWR84#3160%&	316	7	S, W, N, Z	B, D, F	S	P, R	DAL, SHA, TEP
RWR84#3200%&	320	7	S, W, N, Z	B, D	S	P, R	DAL, SHA, TEP
RWR84#3240%&	324	7	S, W, N, Z	B, D, F	S	P, R	DAL, SHA, TEP
RWR84#3280%&	328	7	S, W, N, Z	B, D	S	P, R	DAL, SHA, TEP
RWR84#3320%&	332	7	S, W, N, Z	B, D, F	S	P, R	DAL, SHA, TEP
RWR84#3360%&	336	7	S, W, N, Z	B, D	S	P, R	DAL, SHA, TEP
RWR84#3400%&	340	7	S, W, N, Z	B, D, F	S	P, R	DAL, SHA, TEP
RWR84#3440%&	344	7	S, W, N, Z	B, D	S	P, R	DAL, SHA, TEP
RWR84#3480%&	348	7	S, W, N, Z	B, D, F	S	P, R	DAL, SHA, TEP
RWR84#3520%&	352	7	S, W, N, Z	B, D	S	P, R	DAL, SHA, TEP
RWR84#3570%&	357	7	S, W, N, Z	B, D, F	S	P, R	DAL, SHA, TEP
RWR84#3610%&	361	7	S, W, N, Z	B, D	S	P, R	DAL, SHA, TEP
RWR84#3650%&	365	7	S, W, N, Z	B, D, F	S	P, R	DAL, SHA, TEP
RWR84#3700%&	370	7	S, W, N, Z	B, D	S	P, R	DAL, SHA, TEP
	Resistance	Power	Terminal	Resistance	Level 1	Level 2	
Part Number	Value (Ohms)	Rating (W)	Characteristic (#)	Tolerance (%)	(FRL)(&)	(FRL)(&)	Manufacturer
RWR84#3740%&	374	7	S, W, N, Z	B, D, F	S	P, R	DAL, SHA, TEP
RWR84#3790%&	379	7	S, W, N, Z	B, D	S	P, R	DAL, SHA, TEP
RWR84#3830%&	383	7	S, W, N, Z	B, D, F	S	P, R	DAL, SHA, TEP
RWR84#3880%&	388	7	S, W, N, Z	B, D	S	P, R	DAL, SHA, TEP
RWR84#3920%&	392	7	S, W, N, Z	B, D, F	S	P, R	DAL, SHA, TEP
RWR84#3970%&	397	7	S, W, N, Z	B, D	S	P, R	DAL, SHA, TEP
RWR84#4020%&	402	7	S, W, N, Z	B, D, F	S	P, R	DAL, SHA, TEP
RWR84#4070%&	407	7	S, W, N, Z	B, D	S	P, R	DAL, SHA, TEP
RWR84#4120%&	412	7	S, W, N, Z	B, D, F	S	P, R	DAL, SHA, TEP
RWR84#4170%&	417	7	S, W, N, Z	B, D	S	P, R	DAL, SHA, TEP
RWR84#4220%&	422	7	S, W, N, Z	B, D, F	S	P, R	DAL, SHA, TEP

RWR84#4270%&	427	7	S, W, N, Z	B, D	S	P, R	DAL, SHA, TEP
RWR84#4320%&	432	7	S, W, N, Z	B, D, F	S	P, R	DAL, SHA, TEP
RWR84#4370%&	437	7	S, W, N, Z	B, D	S	P, R	DAL, SHA, TEP
	Resistance	Power	Terminal	Resistance	Level 1	Level 2	
Part Number	Value (Ohms)	Rating (W)	Characteristic (#)	Tolerance (%)	(FRL)(&)	(FRL)(&)	Manufacturer
RWR84#4420%&	442	7	S, W, N, Z	B, D, F	S	P, R	DAL, SHA, TEP
RWR84#4480%&	448	7	S, W, N, Z	B, D	S	P, R	DAL, SHA, TEP
RWR84#4530%&	453	7	S, W, N, Z	B, D, F	S	P, R	DAL, SHA, TEP
RWR84#4590%&	459	7	S, W, N, Z	B, D	S	P, R	DAL, SHA, TEP
RWR84#4640%&	464	7	S, W, N, Z	B, D, F	S	P, R	DAL, SHA, TEP
RWR84#4700%&	470	7	S, W, N, Z	B, D	S	P, R	DAL, SHA, TEP
RWR84#4750%&	475	7	S, W, N, Z	B, D, F	S	P, R	DAL, SHA, TEP
RWR84#4810%&	481	7	S, W, N, Z	B, D	S	P, R	DAL, SHA, TEP
RWR84#4870%&	487	7	S, W, N, Z	B, D, F	S	P, R	DAL, SHA, TEP
RWR84#4930%&	493	7	S, W, N, Z	B, D	S	P, R	DAL, SHA, TEP
RWR84#4990%&	499	7	S, W, N, Z	B, D, F	S	P, R	DAL, SHA, TEP
RWR84#5050%&	505	7	S, W, N, Z	B, D	S	P, R	DAL, SHA, TEP
RWR84#5110%&	511	7	S, W, N, Z	B, D, F	S	P, R	DAL, SHA, TEP
RWR84#5170%&	517	7	S, W, N, Z	B, D	S	P, R	DAL, SHA, TEP
	Resistance	Power	Terminal	Resistance	Level 1	Level 2	
Part Number	Value (Ohms)	Rating (W)	Characteristic (#)	Tolerance (%)	(FRL)(&)	(FRL)(&)	Manufacturer
RWR84#5230%&	523	7	S, W, N, Z	B, D, F	S	P, R	DAL, SHA, TEP
RWR84#5300%&	530	7	S, W, N, Z	B, D	S	P, R	DAL, SHA, TEP
RWR84#5360%&	536	7	S, W, N, Z	B, D, F	S	P, R	DAL, SHA, TEP
RWR84#5420%&	542	7	S, W, N, Z	B, D	S	P, R	DAL, SHA, TEP
RWR84#5490%&	549	7	S, W, N, Z	B, D, F	S	P, R	DAL, SHA, TEP
RWR84#5560%&	556	7	S, W, N, Z	B, D	S	P, R	DAL, SHA, TEP
RWR84#5620%&	562	7	S, W, N, Z	B, D, F	S	P, R	DAL, SHA, TEP
RWR84#5690%&	569	7	S, W, N, Z	B, D	S	P, R	DAL, SHA, TEP
RWR84#5760%&	576	7	S, W, N, Z	B, D, F	S	P, R	DAL, SHA, TEP
RWR84#5830%&	583	7	S, W, N, Z	B, D	S	P, R	DAL, SHA, TEP
RWR84#5900%&	590	7	S, W, N, Z	B, D, F	S	P, R	DAL, SHA, TEP
RWR84#5970%&	597	7	S, W, N, Z	B, D	S	P, R	DAL, SHA, TEP
RWR84#6040%&	604	7	S, W, N, Z	B, D, F	S	P, R	DAL, SHA, TEP
RWR84#6120%&	612	7	S, W, N, Z	B, D	S	P, R	DAL, SHA, TEP
	Resistance	Power	Terminal	Resistance	Level 1	Level 2	
Part Number	Value (Ohms)	Rating (W)	Characteristic (#)	Tolerance (%)	(FRL)(&)	(FRL)(&)	Manufacturer
RWR84#6190%&	619	7	S, W, N, Z	B, D, F	S	P, R	DAL, SHA, TEP
RWR84#6260%&	626	7	S, W, N, Z	B, D	S	P, R	DAL, SHA, TEP
RWR84#6340%&	634	7	S, W, N, Z	B, D, F	S	P, R	DAL, SHA, TEP
RWR84#6420%&	642	7	S, W, N, Z	B, D	S	P, R	DAL, SHA, TEP
RWR84#6490%&	649	7	S, W, N, Z	B, D, F	S	P, R	DAL, SHA, TEP
RWR84#6570%&	657	7	S, W, N, Z	B, D	S	P, R	DAL, SHA, TEP
RWR84#6650%&	665	7	S, W, N, Z	B, D, F	S	P, R	DAL, SHA, TEP
RWR84#6730%&	673	7	S, W, N, Z	B, D	S	P, R	DAL, SHA, TEP
RWR84#6810%&	681	7	S, W, N, Z	B, D, F	S	P, R	DAL, SHA, TEP
RWR84#6900%&	690	7	S, W, N, Z	B, D	S	P, R	DAL, SHA, TEP

RWR84#6980%&	698	7	S, W, N, Z	B, D, F	S	P, R	DAL, SHA, TEP
RWR84#7060%&	706	7	S, W, N, Z	B, D	S	P, R	DAL, SHA, TEP
RWR84#7150%&	715	7	S, W, N, Z	B, D, F	S	P, R	DAL, SHA, TEP
RWR84#7230%&	723	7	S, W, N, Z	B, D	S	P, R	DAL, SHA, TEP
	Resistance	Power	Terminal	Resistance	Level 1	Level 2	
Part Number	Value (Ohms)	Rating (W)	Characteristic (#)	Tolerance (%)	(FRL)(&)	(FRL)(&)	Manufacturer
RWR84#7320%&	732	7	S, W, N, Z	B, D, F	S	P, R	DAL, SHA, TEP
RWR84#7410%&	741	7	S, W, N, Z	B, D	S	P, R	DAL, SHA, TEP
RWR84#7500%&	750	7	S, W, N, Z	B, D, F	S	P, R	DAL, SHA, TEP
RWR84#7590%&	759	7	S, W, N, Z	B, D	S	P, R	DAL, SHA, TEP
RWR84#7680%&	768	7	S, W, N, Z	B, D, F	S	P, R	DAL, SHA, TEP
RWR84#7770%&	777	7	S, W, N, Z	B, D	S	P, R	DAL, SHA, TEP
RWR84#7870%&	787	7	S, W, N, Z	B, D, F	S	P, R	DAL, SHA, TEP
RWR84#7960%&	796	7	S, W, N, Z	B, D	S	P, R	DAL, SHA, TEP
RWR84#8060%&	806	7	S, W, N, Z	B, D, F	S	P, R	DAL, SHA, TEP
RWR84#8160%&	816	7	S, W, N, Z	B, D	S	P, R	DAL, SHA, TEP
RWR84#8250%&	825	7	S, W, N, Z	B, D, F	S	P, R	DAL, SHA, TEP
RWR84#8350%&	835	7	S, W, N, Z	B, D	S	P, R	DAL, SHA, TEP
RWR84#8450%&	845	7	S, W, N, Z	B, D, F	S	P, R	DAL, SHA, TEP
RWR84#8560%&	856	7	S, W, N, Z	B, D	S	P, R	DAL, SHA, TEP
	Resistance	Power	Terminal	Resistance	Level 1	Level 2	
Part Number	Value (Ohms)	Rating (W)	Characteristic (#)	Tolerance (%)	(FRL)(&)	(FRL)(&)	Manufacturer
RWR84#8660%&	866	7	S, W, N, Z	B, D, F	S	P, R	DAL, SHA, TEP
RWR84#8760%&	876	7	S, W, N, Z	B, D	S	P, R	DAL, SHA, TEP
RWR84#8870%&	887	7	S, W, N, Z	B, D, F	S	P, R	DAL, SHA, TEP
RWR84#8980%&	898	7	S, W, N, Z	B, D	S	P, R	DAL, SHA, TEP
RWR84#9090%&	909	7	S, W, N, Z	B, D, F	S	P, R	DAL, SHA, TEP
RWR84#9200%&	920	7	S, W, N, Z	B, D	S	P, R	DAL, SHA, TEP
RWR84#9310%&	931	7	S, W, N, Z	B, D, F	S	P, R	DAL, SHA, TEP
RWR84#9420%&	942	7	S, W, N, Z	B, D	S	P, R	DAL, SHA, TEP
RWR84#9530%&	953	7	S, W, N, Z	B, D, F	S	P, R	DAL, SHA, TEP
RWR84#9650%&	965	7	S, W, N, Z	B, D	S	P, R	DAL, SHA, TEP
RWR84#9760%&	976	7	S, W, N, Z	B, D, F	S	P, R	DAL, SHA, TEP
RWR84#9880%&	988	7	S, W, N, Z	B, D	S	P, R	DAL, SHA, TEP
	Resistance	Power	Terminal	Resistance	Level 1	Level 2	
Part Number	Value (Ohms)	Rating (W)	Characteristic (#)	Tolerance (%)	(FRL)(&)	(FRL)(&)	Manufacturer

RWR84 Wirewound Resistors: 1000 Ohms through 9880 Ohms

	Resistance	Power	Terminal	Resistance	Level 1	Level 2	
Part Number	Value (Ohms)	Rating (W)	Characteristic (#)	Tolerance (%)	(FRL)(&)	(FRL)(&)	Manufacturer
RWR84#1001%&	1000	7	S, W, N, Z	B, D, F	S	P, R	DAL, SHA, TEP
RWR84#1011%&	1010	7	S, W, N, Z	B, D	S	P, R	DAL, SHA, TEP
RWR84#1021%&	1020	7	S, W, N, Z	B, D, F	S	P, R	DAL, SHA, TEP
RWR84#1041%&	1040	7	S, W, N, Z	B, D	S	P, R	DAL, SHA, TEP

RWR84#1051%&	1050	7	S, W, N, Z	B, D, F	S	P, R	DAL, SHA, TEP
RWR84#1061%&	1060	7	S, W, N, Z	B, D	S	P, R	DAL, SHA, TEP
RWR84#1071%&	1070	7	S, W, N, Z	B, D, F	S	P, R	DAL, SHA, TEP
RWR84#1091%&	1090	7	S, W, N, Z	B, D	S	P, R	DAL, SHA, TEP
RWR84#1101%&	1100	7	S, W, N, Z	B, D, F	S	P, R	DAL, SHA, TEP
RWR84#1111%&	1110	7	S, W, N, Z	B, D	S	P, R	DAL, SHA, TEP
RWR84#1131%&	1130	7	S, W, N, Z	B, D, F	S	P, R	DAL, SHA, TEP
RWR84#1141%&	1140	7	S, W, N, Z	B, D	S	P, R	DAL, SHA, TEP
RWR84#1151%&	1150	7	S, W, N, Z	B, D, F	S	P, R	DAL, SHA, TEP
RWR84#1171%&	1170	7	S, W, N, Z	B, D	S	P, R	DAL, SHA, TEP
	Resistance	Power	Terminal	Resistance	Level 1	Level 2	
Part Number	Value (Ohms)	Rating (W)	Characteristic (#)	Tolerance (%)	(FRL)(&)	(FRL)(&)	Manufacturer
RWR84#1181%&	1180	7	S, W, N, Z	B, D, F	S	P, R	DAL, SHA, TEP
RWR84#1201%&	1200	7	S, W, N, Z	B, D	S	P, R	DAL, SHA, TEP
RWR84#1211%&	1210	7	S, W, N, Z	B, D, F	S	P, R	DAL, SHA, TEP
RWR84#1231%&	1230	7	S, W, N, Z	B, D	S	P, R	DAL, SHA, TEP
RWR84#1241%&	1240	7	S, W, N, Z	B, D, F	S	P, R	DAL, SHA, TEP
RWR84#1261%&	1260	7	S, W, N, Z	B, D	S	P, R	DAL, SHA, TEP
RWR84#1271%&	1270	7	S, W, N, Z	B, D, F	S	P, R	DAL, SHA, TEP
RWR84#1291%&	1290	7	S, W, N, Z	B, D	S	P, R	DAL, SHA, TEP
RWR84#1301%&	1300	7	S, W, N, Z	B, D, F	S	P, R	DAL, SHA, TEP
RWR84#1321%&	1320	7	S, W, N, Z	B, D	S	P, R	DAL, SHA, TEP
RWR84#1331%&	1330	7	S, W, N, Z	B, D, F	S	P, R	DAL, SHA, TEP
RWR84#1351%&	1350	7	S, W, N, Z	B, D	S	P, R	DAL, SHA, TEP
RWR84#1371%&	1370	7	S, W, N, Z	B, D, F	S	P, R	DAL, SHA, TEP
RWR84#1381%&	1380	7	S, W, N, Z	B, D	S	P, R	DAL, SHA, TEP
	Resistance	Power	Terminal	Resistance	Level 1	Level 2	
Part Number	Value (Ohms)	Rating (W)	Characteristic (#)	Tolerance (%)	(FRL)(&)	(FRL)(&)	Manufacturer
RWR84#1401%&	1400	7	S, W, N, Z	B, D, F	S	P, R	DAL, SHA, TEP
RWR84#1421%&	1420	7	S, W, N, Z	B, D	S	P, R	DAL, SHA, TEP
RWR84#1431%&	1430	7	S, W, N, Z	B, D, F	S	P, R	DAL, SHA, TEP
RWR84#1451%&	1450	7	S, W, N, Z	B, D	S	P, R	DAL, SHA, TEP
RWR84#1471%&	1470	7	S, W, N, Z	B, D, F	S	P, R	DAL, SHA, TEP
RWR84#1491%&	1490	7	S, W, N, Z	B, D	S	P, R	DAL, SHA, TEP
RWR84#1501%&	1500	7	S, W, N, Z	B, D, F	S	P, R	DAL, SHA, TEP
RWR84#1521%&	1520	7	S, W, N, Z	B, D	S	P, R	DAL, SHA, TEP
RWR84#1541%&	1540	7	S, W, N, Z	B, D, F	S	P, R	DAL, SHA, TEP
RWR84#1561%&	1560	7	S, W, N, Z	B, D	S	P, R	DAL, SHA, TEP
RWR84#1581%&	1580	7	S, W, N, Z	B, D, F	S	P, R	DAL, SHA, TEP
RWR84#1601%&	1600	7	S, W, N, Z	B, D	S	P, R	DAL, SHA, TEP
RWR84#1621%&	1620	7	S, W, N, Z	B, D, F	S	P, R	DAL, SHA, TEP
RWR84#1641%&	1640	7	S, W, N, Z	B, D	S	P, R	DAL, SHA, TEP
	Resistance	Power	Terminal	Resistance	Level 1	Level 2	
Part Number	Value (Ohms)	Rating (W)	Characteristic (#)	Tolerance (%)	(FRL)(&)	(FRL)(&)	Manufacturer
RWR84#1651%&	1650	7	S, W, N, Z	B, D, F	S	P, R	DAL, SHA, TEP
RWR84#1671%&	1670	7	S, W, N, Z	B, D	S	P, R	DAL, SHA, TEP
RWR84#1691%&	1690	7	S, W, N, Z	B, D, F	S	P, R	DAL, SHA, TEP

RWR84#1721%&	1720	7	S, W, N, Z	B, D	S	P, R	DAL, SHA, TEP
RWR84#1741%&	1740	7	S, W, N, Z	B, D, F	S	P, R	DAL, SHA, TEP
RWR84#1761%&	1760	7	S, W, N, Z	B, D	S	P, R	DAL, SHA, TEP
RWR84#1781%&	1780	7	S, W, N, Z	B, D, F	S	P, R	DAL, SHA, TEP
RWR84#1801%&	1800	7	S, W, N, Z	B, D, F	S	P, R	DAL, SHA, TEP
RWR84#1821%&	1820	7	S, W, N, Z	B, D, F	S	P, R	DAL, SHA, TEP
RWR84#1841%&	1840	7	S, W, N, Z	B, D	S	P, R	DAL, SHA, TEP
RWR84#1871%&	1870	7	S, W, N, Z	B, D, F	S	P, R	DAL, SHA, TEP
RWR84#1891%&	1890	7	S, W, N, Z	B, D	S	P, R	DAL, SHA, TEP
RWR84#1911%&	1910	7	S, W, N, Z	B, D, F	S	P, R	DAL, SHA, TEP
RWR84#1931%&	1930	7	S, W, N, Z	B, D	S	P, R	DAL, SHA, TEP
	Resistance	Power	Terminal	Resistance	Level 1	Level 2	
Part Number	Value (Ohms)	Rating (W)	Characteristic (#)	Tolerance (%)	(FRL)(&)	(FRL)(&)	Manufacturer
RWR84#1961%&	1960	7	S, W, N, Z	B, D, F	S	P, R	DAL, SHA, TEP
RWR84#1981%&	1980	7	S, W, N, Z	B, D	S	P, R	DAL, SHA, TEP
RWR84#2001%&	2000	7	S, W, N, Z	B, D, F	S	P, R	DAL, SHA, TEP
RWR84#2031%&	2030	7	S, W, N, Z	B, D	S	P, R	DAL, SHA, TEP
RWR84#2051%&	2050	7	S, W, N, Z	B, D, F	S	P, R	DAL, SHA, TEP
RWR84#2081%&	2080	7	S, W, N, Z	B, D	S	P, R	DAL, SHA, TEP
RWR84#2101%&	2100	7	S, W, N, Z	B, D, F	S	P, R	DAL, SHA, TEP
RWR84#2131%&	2130	7	S, W, N, Z	B, D	S	P, R	DAL, SHA, TEP
RWR84#2151%&	2150	7	S, W, N, Z	B, D, F	S	P, R	DAL, SHA, TEP
RWR84#2181%&	2180	7	S, W, N, Z	B, D	S	P, R	DAL, SHA, TEP
RWR84#2211%&	2210	7	S, W, N, Z	B, D, F	S	P, R	DAL, SHA, TEP
RWR84#2231%&	2230	7	S, W, N, Z	B, D	S	P, R	DAL, SHA, TEP
RWR84#2261%&	2260	7	S, W, N, Z	B, D, F	S	P, R	DAL, SHA, TEP
RWR84#2291%&	2290	7	S, W, N, Z	B, D	S	P, R	DAL, SHA, TEP
	Resistance	Power	Terminal	Resistance	Level 1	Level 2	
Part Number	Value (Ohms)	Rating (W)	Characteristic (#)	Tolerance (%)	(FRL)(&)	(FRL)(&)	Manufacturer
RWR84#2321%&	2320	7	S, W, N, Z	B, D, F	S	P, R	DAL, SHA, TEP
RWR84#2341%&	2340	7	S, W, N, Z	B, D	S	P, R	DAL, SHA, TEP
RWR84#2371%&	2370	7	S, W, N, Z	B, D, F	S	P, R	DAL, SHA, TEP
RWR84#2401%&	2400	7	S, W, N, Z	B, D	S	P, R	DAL, SHA, TEP
RWR84#2431%&	2430	7	S, W, N, Z	B, D, F	S	P, R	DAL, SHA, TEP
RWR84#2461%&	2460	7	S, W, N, Z	B, D	S	P, R	DAL, SHA, TEP
RWR84#2491%&	2490	7	S, W, N, Z	B, D, F	S	P, R	DAL, SHA, TEP
RWR84#2521%&	2520	7	S, W, N, Z	B, D	S	P, R	DAL, SHA, TEP
RWR84#2551%&	2550	7	S, W, N, Z	B, D, F	S	P, R	DAL, SHA, TEP
RWR84#2581%&	2580	7	S, W, N, Z	B, D	S	P, R	DAL, SHA, TEP
RWR84#2611%&	2610	7	S, W, N, Z	B, D, F	S	P, R	DAL, SHA, TEP
RWR84#2641%&	2640	7	S, W, N, Z	B, D	S	P, R	DAL, SHA, TEP
RWR84#2671%&	2670	7	S, W, N, Z	B, D, F	S	P, R	DAL, SHA, TEP
RWR84#2711%&	2710	7	S, W, N, Z	B, D	S	P, R	DAL, SHA, TEP
	Resistance	Power	Terminal	Resistance	Level 1	Level 2	
Part Number	Value (Ohms)	Rating (W)	Characteristic (#)	Tolerance (%)	(FRL)(&)	(FRL)(&)	Manufacturer
RWR84#2741%&	2740	7	S, W, N, Z	B, D, F	S	P, R	DAL, SHA, TEP
RWR84#2771%&	2770	7	S, W, N, Z	B, D	S	P, R	DAL, SHA, TEP

RWR84#2801%&	2800	7	S, W, N, Z	B, D, F	S	P, R	DAL, SHA, TEP
RWR84#2841%&	2840	7	S, W, N, Z	B, D	S	P, R	DAL, SHA, TEP
RWR84#2871%&	2870	7	S, W, N, Z	B, D, F	S	P, R	DAL, SHA, TEP
RWR84#2911%&	2910	7	S, W, N, Z	B, D	S	P, R	DAL, SHA, TEP
RWR84#2941%&	2940	7	S, W, N, Z	B, D, F	S	P, R	DAL, SHA, TEP
RWR84#2981%&	2980	7	S, W, N, Z	B, D	S	P, R	DAL, SHA, TEP
RWR84#3011%&	3010	7	S, W, N, Z	B, D, F	S	P, R	DAL, SHA, TEP
RWR84#3051%&	3050	7	S, W, N, Z	B, D	S	P, R	DAL, SHA, TEP
RWR84#3091%&	3090	7	S, W, N, Z	B, D, F	S	P, R	DAL, SHA, TEP
RWR84#3121%&	3120	7	S, W, N, Z	B, D	S	P, R	DAL, SHA, TEP
RWR84#3161%&	3160	7	S, W, N, Z	B, D, F	S	P, R	DAL, SHA, TEP
RWR84#3201%&	3200	7	S, W, N, Z	B, D	S	P, R	DAL, SHA, TEP
	Resistance	Power	Terminal	Resistance	Level 1	Level 2	
Part Number	Value (Ohms)	Rating (W)	Characteristic (#)	Tolerance (%)	(FRL)(&)	(FRL)(&)	Manufacturer
RWR84#3241%&	3240	7	S, W, N, Z	B, D, F	S	P, R	DAL, SHA, TEP
RWR84#3281%&	3280	7	S, W, N, Z	B, D	S	P, R	DAL, SHA, TEP
RWR84#3321%&	3320	7	S, W, N, Z	B, D, F	S	P, R	DAL, SHA, TEP
RWR84#3361%&	3360	7	S, W, N, Z	B, D	S	P, R	DAL, SHA, TEP
RWR84#3401%&	3400	7	S, W, N, Z	B, D, F	S	P, R	DAL, SHA, TEP
RWR84#3441%&	3440	7	S, W, N, Z	B, D	S	P, R	DAL, SHA, TEP
RWR84#3481%&	3480	7	S, W, N, Z	B, D, F	S	P, R	DAL, SHA, TEP
RWR84#3521%&	3520	7	S, W, N, Z	B, D	S	P, R	DAL, SHA, TEP
RWR84#3571%&	3570	7	S, W, N, Z	B, D, F	S	P, R	DAL, SHA, TEP
RWR84#3611%&	3610	7	S, W, N, Z	B, D	S	P, R	DAL, SHA, TEP
RWR84#3651%&	3650	7	S, W, N, Z	B, D, F	S	P, R	DAL, SHA, TEP
RWR84#3701%&	3700	7	S, W, N, Z	B, D	S	P, R	DAL, SHA, TEP
RWR84#3741%&	3740	7	S, W, N, Z	B, D, F	S	P, R	DAL, SHA, TEP
RWR84#3791%&	3790	7	S, W, N, Z	B, D	S	P, R	DAL, SHA, TEP
	Resistance	Power	Terminal	Resistance	Level 1	Level 2	
Part Number	Value (Ohms)	Rating (W)	Characteristic (#)	Tolerance (%)	(FRL)(&)	(FRL)(&)	Manufacturer
RWR84#3831%&	3830	7	S, W, N, Z	B, D, F	S	P, R	DAL, SHA, TEP
RWR84#3881%&	3880	7	S, W, N, Z	B, D	S	P, R	DAL, SHA, TEP
RWR84#3921%&	3920	7	S, W, N, Z	B, D, F	S	P, R	DAL, SHA, TEP
RWR84#3971%&	3970	7	S, W, N, Z	B, D	S	P, R	DAL, SHA, TEP
RWR84#4021%&	4020	7	S, W, N, Z	B, D, F	S	P, R	DAL, SHA, TEP
RWR84#4071%&	4070	7	S, W, N, Z	B, D	S	P, R	DAL, SHA, TEP
RWR84#4121%&	4120	7	S, W, N, Z	B, D, F	S	P, R	DAL, SHA, TEP
RWR84#4171%&	4170	7	S, W, N, Z	B, D	S	P, R	DAL, SHA, TEP
RWR84#4221%&	4220	7	S, W, N, Z	B, D, F	S	P, R	DAL, SHA, TEP
RWR84#4271%&	4270	7	S, W, N, Z	B, D	S	P, R	DAL, SHA, TEP
RWR84#4321%&	4320	7	S, W, N, Z	B, D, F	S	P, R	DAL, SHA, TEP
RWR84#4371%&	4370	7	S, W, N, Z	B, D	S	P, R	DAL, SHA, TEP
RWR84#4421%&	4420	7	S, W, N, Z	B, D, F	S	P, R	DAL, SHA, TEP
RWR84#4481%&	4480	7	S, W, N, Z	B, D	S	P, R	DAL, SHA, TEP
	Resistance	Power	Terminal	Resistance	Level 1	Level 2	
Part Number	Value (Ohms)	Rating (W)	Characteristic (#)	Tolerance (%)	(FRL)(&)	(FRL)(&)	Manufacturer
RWR84#4531%&	4530	7	S, W, N, Z	B, D, F	S	P, R	DAL, SHA, TEP

RWR84#4591%&	4590	7	S, W, N, Z	B, D	S	P, R	DAL, SHA, TEP
RWR84#4641%&	4640	7	S, W, N, Z	B, D, F	S	P, R	DAL, SHA, TEP
RWR84#4701%&	4700	7	S, W, N, Z	B, D	S	P, R	DAL, SHA, TEP
RWR84#4751%&	4750	7	S, W, N, Z	B, D, F	S	P, R	DAL, SHA, TEP
RWR84#4811%&	4810	7	S, W, N, Z	B, D	S	P, R	DAL, SHA, TEP
RWR84#4871%&	4870	7	S, W, N, Z	B, D, F	S	P, R	DAL, SHA, TEP
RWR84#4931%&	4930	7	S, W, N, Z	B, D	S	P, R	DAL, SHA, TEP
RWR84#4991%&	4990	7	S, W, N, Z	B, D, F	S	P, R	DAL, SHA, TEP
RWR84#5051%&	5050	7	S, W, N, Z	B, D	S	P, R	DAL, SHA, TEP
RWR84#5111%&	5110	7	S, W, N, Z	B, D, F	S	P, R	DAL, SHA, TEP
RWR84#5171%&	5170	7	S, W, N, Z	B, D	S	P, R	DAL, SHA, TEP
RWR84#5231%&	5230	7	S, W, N, Z	B, D, F	S	P, R	DAL, SHA, TEP
RWR84#5301%&	5300	7	S, W, N, Z	B, D	S	P, R	DAL, SHA, TEP
	Resistance	Power	Terminal	Resistance	Level 1	Level 2	
Part Number	Value (Ohms)	Rating (W)	Characteristic (#)	Tolerance (%)	(FRL)(&)	(FRL)(&)	Manufacturer
RWR84#5361%&	5360	7	S, W, N, Z	B, D, F	S	P, R	DAL, SHA, TEP
RWR84#5421%&	5420	7	S, W, N, Z	B, D	S	P, R	DAL, SHA, TEP
RWR84#5491%&	5490	7	S, W, N, Z	B, D, F	S	P, R	DAL, SHA, TEP
RWR84#5561%&	5560	7	S, W, N, Z	B, D	S	P, R	DAL, SHA, TEP
RWR84#5621%&	5620	7	S, W, N, Z	B, D, F	S	P, R	DAL, SHA, TEP
RWR84#5691%&	5690	7	S, W, N, Z	B, D	S	P, R	DAL, SHA, TEP
RWR84#5761%&	5760	7	S, W, N, Z	B, D, F	S	P, R	DAL, SHA, TEP
RWR84#5831%&	5830	7	S, W, N, Z	B, D	S	P, R	DAL, SHA, TEP
RWR84#5901%&	5900	7	S, W, N, Z	B, D, F	S	P, R	DAL, SHA, TEP
RWR84#5971%&	5970	7	S, W, N, Z	B, D	S	P, R	DAL, SHA, TEP
RWR84#6041%&	6040	7	S, W, N, Z	B, D, F	S	P, R	DAL, SHA, TEP
RWR84#6121%&	6120	7	S, W, N, Z	B, D	S	P, R	DAL, SHA, TEP
RWR84#6191%&	6190	7	S, W, N, Z	B, D, F	S	P, R	DAL, SHA, TEP
RWR84#6261%&	6260	7	S, W	B, D	S	P, R	DAL, SHA, TEP
	Resistance	Power	Terminal	Resistance	Level 1	Level 2	
Part Number	Value (Ohms)	Rating (W)	Characteristic (#)	Tolerance (%)	(FRL)(&)	(FRL)(&)	Manufacturer
	Resistance	Power	Terminal	Resistance	Level 1	Level 2	
Part Number	Value (Ohms)	Rating (W)	Characteristic (#)	Tolerance (%)	(FRL)(&)	(FRL)(&)	Manufacturer
RWR84#6341%&	6340	7	S, W	B, D, F	S	P, R	DAL, SHA, TEP
RWR84#6421%&	6420	7	S, W	B, D	S	P, R	DAL, SHA, TEP
RWR84#6491%&	6490	7	S, W	B, D, F	S	P, R	DAL, SHA, TEP
RWR84#6571%&	6570	7	S, W	B, D	S	P, R	DAL, SHA, TEP
RWR84#6651%&	6650	7	S, W	B, D, F	S	P, R	DAL, SHA, TEP
RWR84#6731%&	6730	7	S, W	B, D	S	P, R	DAL, SHA, TEP
RWR84#6811%&	6810	7	S, W	B, D, F	S	P, R	DAL, SHA, TEP
RWR84#6901%&	6900	7	S, W	B, D	S	P, R	DAL, SHA, TEP
RWR84#6981%&	6980	7	S, W	B, D, F	S	P, R	DAL, SHA, TEP
RWR84#7061%&	7060	7	S, W	B, D	S	P, R	DAL, SHA, TEP
RWR84#7151%&	7150	7	S, W	B, D, F	S	P, R	DAL, SHA, TEP
RWR84#7231%&	7230	7	S, W	B, D	S	P, R	DAL, SHA, TEP
RWR84#7321%&	7320	7	S, W	B, D, F	S	P, R	DAL, SHA, TEP
RWR84#7411%&	7410	7	S, W	B, D	S	P, R	DAL, SHA, TEP

	Resistance	Power	Terminal	Resistance	Level 1	Level 2	
Part Number	Value (Ohms)	Rating (W)	Characteristic (#)	Tolerance (%)	(FRL)(&)	(FRL)(&)	Manufacturer
RWR84#7501%&	7500	7	S, W	B, D, F	S	P, R	DAL, SHA, TEP
RWR84#7591%&	7590	7	S, W	B, D	S	P, R	DAL, SHA, TEP
RWR84#7681%&	7680	7	S, W	B, D, F	S	P, R	DAL, SHA, TEP
RWR84#7771%&	7770	7	S, W	B, D	S	P, R	DAL, SHA, TEP
RWR84#7871%&	7870	7	S, W	B, D, F	S	P, R	DAL, SHA, TEP
RWR84#7961%&	7960	7	S, W	B, D	S	P, R	DAL, SHA, TEP
RWR84#8061%&	8060	7	S, W	B, D, F	S	P, R	DAL, SHA, TEP
RWR84#8161%&	8160	7	S, W	B, D	S	P, R	DAL, SHA, TEP
RWR84#8251%&	8250	7	S, W	B, D, F	S	P, R	DAL, SHA, TEP
RWR84#8351%&	8350	7	S, W	B, D	S	P, R	DAL, SHA, TEP
RWR84#8451%&	8450	7	S, W	B, D, F	S	P, R	DAL, SHA, TEP
RWR84#8561%&	8560	7	S, W	B, D	S	P, R	DAL, SHA, TEP
RWR84#8661%&	8660	7	S, W	B, D, F	S	P, R	DAL, SHA, TEP
RWR84#8761%&	8760	7	S, W	B, D	S	P, R	DAL, SHA, TEP
	Resistance	Power	Terminal	Resistance	Level 1	Level 2	
Part Number	Value (Ohms)	Rating (W)	Characteristic (#)	Tolerance (%)	(FRL)(&)	(FRL)(&)	Manufacturer
RWR84#8871%&	8870	7	S, W	B, D, F	S	P, R	DAL, SHA, TEP
RWR84#8981%&	8980	7	S, W	B, D	S	P, R	DAL, SHA, TEP
RWR84#9091%&	9090	7	S, W	B, D, F	S	P, R	DAL, SHA, TEP
RWR84#9201%&	9200	7	S, W	B, D	S	P, R	DAL, SHA, TEP
RWR84#9311%&	9310	7	S, W	B, D, F	S	P, R	DAL, SHA, TEP
RWR84#9421%&	9420	7	S, W	B, D	S	P, R	DAL, SHA, TEP
RWR84#9531%&	9530	7	S, W	B, D, F	S	P, R	DAL, SHA, TEP
RWR84#9651%&	9650	7	S, W	B, D	S	P, R	DAL, SHA, TEP
RWR84#9761%&	9760	7	S, W	B, D, F	S	P, R	DAL, SHA, TEP
RWR84#9881%&	9880	7	S, W	B, D	S	P, R	DAL, SHA, TEP
	Resistance	Power	Terminal	Resistance	Level 1	Level 2	
Part Number	Value (Ohms)	Rating (W)	Characteristic (#)	Tolerance (%)	(FRL)(&)	(FRL)(&)	Manufacturer

RWR84 Wirewound Resistors: 10000 Ohms through 12400 Ohms

	Resistance	Power	Terminal	Resistance	Level 1	Level 2	
Part Number	Value (Ohms)	Rating (W)	Characteristic (#)	Tolerance (%)	(FRL)(&)	(FRL)(&)	Manufacturer
RWR84#1002%&	10000	7	S, W	B, D, F	S	P, R	DAL, SHA, TEP
RWR84#1012%&	10100	7	S, W	B, D	S	P, R	DAL, SHA, TEP
RWR84#1022%&	10200	7	S, W	B, D, F	S	P, R	DAL, SHA, TEP
RWR84#1042%&	10400	7	S, W	B, D	S	P, R	DAL, SHA, TEP
RWR84#1052%&	10500	7	S, W	B, D, F	S	P, R	DAL, SHA, TEP
RWR84#1062%&	10600	7	S, W	B, D	S	P, R	DAL, SHA, TEP
RWR84#1072%&	10700	7	S, W	B, D, F	S	P, R	DAL, SHA, TEP
RWR84#1092%&	10900	7	S, W	B, D	S	P, R	DAL, SHA, TEP
RWR84#1102%&	11000	7	S, W	B, D, F	S	P, R	DAL, SHA, TEP
RWR84#1112%&	11100	7	S, W	B, D	S	P, R	DAL, SHA, TEP

RWR84#1132%&	11300	7	S, W	B, D, F	S	P, R	DAL, SHA, TEP
RWR84#1142%&	11400	7	S, W	B, D	S	P, R	DAL, SHA, TEP
RWR84#1152%&	11500	7	S, W	B, D, F	S	P, R	DAL, SHA, TEP
RWR84#1172%&	11700	7	S, W	B, D	S	P, R	DAL, SHA, TEP
	Resistance	Power	Terminal	Resistance	Level 1	Level 2	
Part Number	Value (Ohms)	Rating (W)	Characteristic (#)	Tolerance (%)	(FRL)(&)	(FRL)(&)	Manufacturer
RWR84#1182%&	11800	7	S, W	B, D, F	S	P, R	DAL, SHA, TEP
RWR84#1202%&	12000	7	S, W	B, D	S	P, R	DAL, SHA, TEP
RWR84#1212%&	12100	7	S, W	B, D, F	S	P, R	DAL, SHA, TEP
RWR84#1232%&	12300	7	S, W	B, D	S	P, R	DAL, SHA, TEP
RWR84#1242%&	12400	7	S, W	B, D, F	S	P, R	DAL, SHA, TEP
	Resistance	Power	Terminal	Resistance	Level 1	Level 2	
Part Number	Value (Ohms)	Rating (W)	Characteristic (#)	Tolerance (%)	(FRL)(&)	(FRL)(&)	Manufacturer

RWR89 Wirewound Resistors

	Resistance	Power	Terminal	Resistance	Level 1	Level 2	
Part Number	Value (Ohms)	Rating (W)	Characteristic (#)	Tolerance (%)	(FRL)(&)	(FRL)(&)	Manufacturer
RWR89#R100%&	0.100	3	S, W, N, Z	B, D, F	S	P, R	DAL, SHA, TEP
RWR89#R101%&	0.101	3	S, W, N, Z	B, D	S	P, R	DAL, SHA, TEP
RWR89#R102%&	0.102	3	S, W, N, Z	B, D, F	S	P, R	DAL, SHA, TEP
RWR89#R104%&	0.104	3	S, W, N, Z	B, D	S	P, R	DAL, SHA, TEP
RWR89#R105%&	0.105	3	S, W, N, Z	B, D, F	S	P, R	DAL, SHA, TEP
RWR89#R106%&	0.106	3	S, W, N, Z	B, D	S	P, R	DAL, SHA, TEP
RWR89#R107%&	0.107	3	S, W, N, Z	B, D, F	S	P, R	DAL, SHA, TEP
RWR89#R109%&	0.109	3	S, W, N, Z	B, D	S	P, R	DAL, SHA, TEP
RWR89#R110%&	0.110	3	S, W, N, Z	B, D, F	S	P, R	DAL, SHA, TEP
RWR89#R111%&	0.111	3	S, W, N, Z	B, D	S	P, R	DAL, SHA, TEP
RWR89#R113%&	0.113	3	S, W, N, Z	B, D, F	S	P, R	DAL, SHA, TEP
RWR89#R114%&	0.114	3	S, W, N, Z	B, D	S	P, R	DAL, SHA, TEP
RWR89#R115%&	0.115	3	S, W, N, Z	B, D, F	S	P, R	DAL, SHA, TEP
RWR89#R117%&	0.117	3	S, W, N, Z	B, D	S	P, R	DAL, SHA, TEP
RWR89#R118%&	0.118	3	S, W, N, Z	B, D, F	S	P, R	DAL, SHA, TEP
RWR89#R120%&	0.120	3	S, W, N, Z	B, D	S	P, R	DAL, SHA, TEP
RWR89#R121%&	0.121	3	S, W, N, Z	B, D, F	S	P, R	DAL, SHA, TEP
RWR89#R123%&	0.123	3	S, W, N, Z	B, D	S	P, R	DAL, SHA, TEP
RWR89#R124%&	0.124	3	S, W, N, Z	B, D, F	S	P, R	DAL, SHA, TEP
RWR89#R126%&	0.126	3	S, W, N, Z	B, D	S	P, R	DAL, SHA, TEP
RWR89#R127%&	0.127	3	S, W, N, Z	B, D, F	S	P, R	DAL, SHA, TEP
RWR89#R129%&	0.129	3	S, W, N, Z	B, D	S	P, R	DAL, SHA, TEP
RWR89#R130%&	0.130	3	S, W, N, Z	B, D, F	S	P, R	DAL, SHA, TEP
RWR89#R132%&	0.132	3	S, W, N, Z	B, D	S	P, R	DAL, SHA, TEP
RWR89#R133%&	0.133	3	S, W, N, Z	B, D, F	S	P, R	DAL, SHA, TEP
RWR89#R135%&	0.135	3	S, W, N, Z	B, D	S	P, R	DAL, SHA, TEP
RWR89#R137%&	0.137	3	S, W, N, Z	B, D, F	S	P, R	DAL, SHA, TEP

RWR89#R138%&	0.138	3	S, W, N, Z	B, D	S	P, R	DAL, SHA, TEP
RWR89#R140%&	0.140	3	S, W, N, Z	B, D, F	S	P, R	DAL, SHA, TEP
RWR89#R142%&	0.142	3	S, W, N, Z	B, D	S	P, R	DAL, SHA, TEP
RWR89#R143%&	0.143	3	S, W, N, Z	B, D, F	S	P, R	DAL, SHA, TEP
RWR89#R145%&	0.145	3	S, W, N, Z	B, D	S	P, R	DAL, SHA, TEP
RWR89#R147%&	0.147	3	S, W, N, Z	B, D, F	S	P, R	DAL, SHA, TEP
RWR89#R149%&	0.149	3	S, W, N, Z	B, D	S	P, R	DAL, SHA, TEP
RWR89#R150%&	0.150	3	S, W, N, Z	B, D, F	S	P, R	DAL, SHA, TEP
RWR89#R152%&	0.152	3	S, W, N, Z	B, D	S	P, R	DAL, SHA, TEP
RWR89#R154%&	0.154	3	S, W, N, Z	B, D, F	S	P, R	DAL, SHA, TEP
RWR89#R156%&	0.156	3	S, W, N, Z	B, D	S	P, R	DAL, SHA, TEP
RWR89#R158%&	0.158	3	S, W, N, Z	B, D, F	S	P, R	DAL, SHA, TEP
RWR89#R160%&	0.160	3	S, W, N, Z	B, D	S	P, R	DAL, SHA, TEP
RWR89#R162%&	0.162	3	S, W, N, Z	B, D, F	S	P, R	DAL, SHA, TEP
RWR89#R164%&	0.164	3	S, W, N, Z	B, D	S	P, R	DAL, SHA, TEP
RWR89#R165%&	0.165	3	S, W, N, Z	B, D, F	S	P, R	DAL, SHA, TEP
RWR89#R167%&	0.167	3	S, W, N, Z	B, D	S	P, R	DAL, SHA, TEP
RWR89#R169%&	0.169	3	S, W, N, Z	B, D, F	S	P, R	DAL, SHA, TEP
RWR89#R172%&	0.172	3	S, W, N, Z	B, D	S	P, R	DAL, SHA, TEP
RWR89#R174%&	0.174	3	S, W, N, Z	B, D, F	S	P, R	DAL, SHA, TEP
RWR89#R176%&	0.176	3	S, W, N, Z	B, D	S	P, R	DAL, SHA, TEP
RWR89#R178#&	0.178	3	S, W, N, Z	B, D, F	S	P, R	DAL, SHA, TEP
RWR89#R180%&	0.180	3	S, W, N, Z	B, D, F	S	P, R	DAL, SHA, TEP
RWR89#R182%&	0.182	3	S, W, N, Z	B, D, F	S	P, R	DAL, SHA, TEP
RWR89#R184%&	0.184	3	S, W, N, Z	B, D	S	P, R	DAL, SHA, TEP
RWR89#R187%&	0.187	3	S, W, N, Z	B, D, F	S	P, R	DAL, SHA, TEP
RWR89#R189%&	0.189	3	S, W, N, Z	B, D	S	P, R	DAL, SHA, TEP
RWR89#R191%&	0.191	3	S, W, N, Z	B, D, F	S	P, R	DAL, SHA, TEP
RWR89#R193%&	0.193	3	S, W, N, Z	B, D	S	P, R	DAL, SHA, TEP
RWR89#R196%&	0.196	3	S, W, N, Z	B, D, F	S	P, R	DAL, SHA, TEP
RWR89#R198%&	0.198	3	S, W, N, Z	B, D	S	P, R	DAL, SHA, TEP
RWR89#R200%&	0.200	3	S, W, N, Z	B, D, F	S	P, R	DAL, SHA, TEP
RWR89#R203%&	0.203	3	S, W, N, Z	B, D	S	P, R	DAL, SHA, TEP
RWR89#R205%&	0.205	3	S, W, N, Z	B, D, F	S	P, R	DAL, SHA, TEP
RWR89#R208%&	0.208	3	S, W, N, Z	B, D	S	P, R	DAL, SHA, TEP
RWR89#R210%&	0.210	3	S, W, N, Z	B, D, F	S	P, R	DAL, SHA, TEP
RWR89#R213%&	0.213	3	S, W, N, Z	B, D	S	P, R	DAL, SHA, TEP
RWR89#R215%&	0.215	3	S, W, N, Z	B, D, F	S	P, R	DAL, SHA, TEP
RWR89#R218%&	0.218	3	S, W, N, Z	B, D	S	P, R	DAL, SHA, TEP
RWR89#R221%&	0.221	3	S, W, N, Z	B, D, F	S	P, R	DAL, SHA, TEP
RWR89#R223%&	0.223	3	S, W, N, Z	B, D	S	P, R	DAL, SHA, TEP
RWR89#R226%&	0.226	3	S, W, N, Z	B, D, F	S	P, R	DAL, SHA, TEP
RWR89#R229%&	0.229	3	S, W, N, Z	B, D	S	P, R	DAL, SHA, TEP
RWR89#R232%&	0.232	3	S, W, N, Z	B, D, F	S	P, R	DAL, SHA, TEP
RWR89#R234%&	0.234	3	S, W, N, Z	B, D	S	P, R	DAL, SHA, TEP
RWR89#R237%&	0.237	3	S, W, N, Z	B, D, F	S	P, R	DAL, SHA, TEP
RWR89#R240%&	0.240	3	S, W, N, Z	B, D	S	P, R	DAL, SHA, TEP

RWR89#R243%&	0.243	3	S, W, N, Z	B, D, F	S	P, R	DAL, SHA, TEP
RWR89#R246%&	0.246	3	S, W, N, Z	B, D	S	P, R	DAL, SHA, TEP
RWR89#R249%&	0.249	3	S, W, N, Z	B, D, F	S	P, R	DAL, SHA, TEP
RWR89#R252%&	0.252	3	S, W, N, Z	B, D	S	P, R	DAL, SHA, TEP
RWR89#R255%&	0.255	3	S, W, N, Z	B, D, F	S	P, R	DAL, SHA, TEP
RWR89#R258%&	0.258	3	S, W, N, Z	B, D	S	P, R	DAL, SHA, TEP
RWR89#R261%&	0.261	3	S, W, N, Z	B, D, F	S	P, R	DAL, SHA, TEP
RWR89#R264%&	0.264	3	S, W, N, Z	B, D	S	P, R	DAL, SHA, TEP
RWR89#R267%&	0.267	3	S, W, N, Z	B, D, F	S	P, R	DAL, SHA, TEP
RWR89#R271%&	0.271	3	S, W, N, Z	B, D	S	P, R	DAL, SHA, TEP
RWR89#R274%&	0.274	3	S, W, N, Z	B, D, F	S	P, R	DAL, SHA, TEP
RWR89#R277%&	0.277	3	S, W, N, Z	B, D	S	P, R	DAL, SHA, TEP
RWR89#R280%&	0.280	3	S, W, N, Z	B, D, F	S	P, R	DAL, SHA, TEP
RWR89#R284%&	0.284	3	S, W, N, Z	B, D	S	P, R	DAL, SHA, TEP
RWR89#R287%&	0.287	3	S, W, N, Z	B, D, F	S	P, R	DAL, SHA, TEP
RWR89#R291%&	0.291	3	S, W, N, Z	B, D	S	P, R	DAL, SHA, TEP
RWR89#R294%&	0.294	3	S, W, N, Z	B, D, F	S	P, R	DAL, SHA, TEP
RWR89#R298%&	0.298	3	S, W, N, Z	B, D	S	P, R	DAL, SHA, TEP
RWR89#R301%&	0.301	3	S, W, N, Z	B, D, F	S	P, R	DAL, SHA, TEP
RWR89#R305%&	0.305	3	S, W, N, Z	B, D	S	P, R	DAL, SHA, TEP
RWR89#R309%&	0.309	3	S, W, N, Z	B, D, F	S	P, R	DAL, SHA, TEP
RWR89#R312%&	0.312	3	S, W, N, Z	B, D	S	P, R	DAL, SHA, TEP
RWR89#R316%&	0.316	3	S, W, N, Z	B, D, F	S	P, R	DAL, SHA, TEP
RWR89#R320%&	0.320	3	S, W, N, Z	B, D	S	P, R	DAL, SHA, TEP
RWR89#R324%&	0.324	3	S, W, N, Z	B, D, F	S	P, R	DAL, SHA, TEP
RWR89#R328%&	0.328	3	S, W, N, Z	B, D	S	P, R	DAL, SHA, TEP
RWR89#R332%&	0.332	3	S, W, N, Z	B, D, F	S	P, R	DAL, SHA, TEP
RWR89#R336%&	0.336	3	S, W, N, Z	B, D	S	P, R	DAL, SHA, TEP
RWR89#R340%&	0.340	3	S, W, N, Z	B, D, F	S	P, R	DAL, SHA, TEP
RWR89#R344%&	0.344	3	S, W, N, Z	B, D	S	P, R	DAL, SHA, TEP
RWR89#R348%&	0.348	3	S, W, N, Z	B, D, F	S	P, R	DAL, SHA, TEP
RWR89#R352%&	0.352	3	S, W, N, Z	B, D	S	P, R	DAL, SHA, TEP
RWR89#R357%&	0.357	3	S, W, N, Z	B, D, F	S	P, R	DAL, SHA, TEP
RWR89#R361%&	0.361	3	S, W, N, Z	B, D	S	P, R	DAL, SHA, TEP
RWR89#R365%&	0.365	3	S, W, N, Z	B, D, F	S	P, R	DAL, SHA, TEP
RWR89#R370%&	0.370	3	S, W, N, Z	B, D	S	P, R	DAL, SHA, TEP
RWR89#R374%&	0.374	3	S, W, N, Z	B, D, F	S	P, R	DAL, SHA, TEP
RWR89#R379%&	0.379	3	S, W, N, Z	B, D	S	P, R	DAL, SHA, TEP
RWR89#R383%&	0.383	3	S, W, N, Z	B, D, F	S	P, R	DAL, SHA, TEP
RWR89#R388%&	0.388	3	S, W, N, Z	B, D	S	P, R	DAL, SHA, TEP
RWR89#R392%&	0.392	3	S, W, N, Z	B, D, F	S	P, R	DAL, SHA, TEP
RWR89#R397%&	0.397	3	S, W, N, Z	B, D	S	P, R	DAL, SHA, TEP
RWR89#R402%&	0.402	3	S, W, N, Z	B, D, F	S	P, R	DAL, SHA, TEP
RWR89#R407%&	0.407	3	S, W, N, Z	B, D	S	P, R	DAL, SHA, TEP
RWR89#R412%&	0.412	3	S, W, N, Z	B, D, F	S	P, R	DAL, SHA, TEP
RWR89#R417%&	0.417	3	S, W, N, Z	B, D	S	P, R	DAL, SHA, TEP
RWR89#R422%&	0.422	3	S, W, N, Z	B, D, F	S	P, R	DAL, SHA, TEP

RWR89#R427%&	0.427	3	S, W, N, Z	B, D	S	P, R	DAL, SHA, TEP
RWR89#R432%&	0.432	3	S, W, N, Z	B, D, F	S	P, R	DAL, SHA, TEP
RWR89#R437%&	0.437	3	S, W, N, Z	B, D	S	P, R	DAL, SHA, TEP
RWR89#R442%&	0.442	3	S, W, N, Z	B, D, F	S	P, R	DAL, SHA, TEP
RWR89#R448%&	0.448	3	S, W, N, Z	B, D	S	P, R	DAL, SHA, TEP
RWR89#R453%&	0.453	3	S, W, N, Z	B, D, F	S	P, R	DAL, SHA, TEP
RWR89#R459%&	0.459	3	S, W, N, Z	B, D	S	P, R	DAL, SHA, TEP
RWR89#R464%&	0.464	3	S, W, N, Z	B, D, F	S	P, R	DAL, SHA, TEP
RWR89#R470%&	0.470	3	S, W, N, Z	B, D	S	P, R	DAL, SHA, TEP
RWR89#R475%&	0.475	3	S, W, N, Z	B, D, F	S	P, R	DAL, SHA, TEP
RWR89#R481%&	0.481	3	S, W, N, Z	B, D	S	P, R	DAL, SHA, TEP
RWR89#R487%&	0.487	3	S, W, N, Z	B, D, F	S	P, R	DAL, SHA, TEP
RWR89#R493%&	0.493	3	S, W, N, Z	B, D	S	P, R	DAL, SHA, TEP
RWR89#R499%&	0.499	3	S, W, N, Z	B, D, F	S	P, R	DAL, SHA, TEP
RWR89#R505%&	0.505	3	S, W, N, Z	B, D	S	P, R	DAL, SHA, TEP
RWR89#R511%&	0.511	3	S, W, N, Z	B, D, F	S	P, R	DAL, SHA, TEP
RWR89#R517%&	0.517	3	S, W, N, Z	B, D	S	P, R	DAL, SHA, TEP
RWR89#R523%&	0.523	3	S, W, N, Z	B, D, F	S	P, R	DAL, SHA, TEP
RWR89#R530%&	0.530	3	S, W, N, Z	B, D	S	P, R	DAL, SHA, TEP
RWR89#R536%&	0.536	3	S, W, N, Z	B, D, F	S	P, R	DAL, SHA, TEP
RWR89#R542%&	0.542	3	S, W, N, Z	B, D	S	P, R	DAL, SHA, TEP
RWR89#R549%&	0.549	3	S, W, N, Z	B, D, F	S	P, R	DAL, SHA, TEP
RWR89#R556%&	0.556	3	S, W, N, Z	B, D	S	P, R	DAL, SHA, TEP
RWR89#R562%&	0.562	3	S, W, N, Z	B, D, F	S	P, R	DAL, SHA, TEP
RWR89#R569%&	0.569	3	S, W, N, Z	B, D	S	P, R	DAL, SHA, TEP
RWR89#R576%&	0.576	3	S, W, N, Z	B, D, F	S	P, R	DAL, SHA, TEP
RWR89#R583%&	0.583	3	S, W, N, Z	B, D	S	P, R	DAL, SHA, TEP
RWR89#R590%&	0.590	3	S, W, N, Z	B, D, F	S	P, R	DAL, SHA, TEP
RWR89#R597%&	0.597	3	S, W, N, Z	B, D	S	P, R	DAL, SHA, TEP
RWR89#R604%&	0.604	3	S, W, N, Z	B, D, F	S	P, R	DAL, SHA, TEP
RWR89#R612%&	0.612	3	S, W, N, Z	B, D	S	P, R	DAL, SHA, TEP
RWR89#R619%&	0.619	3	S, W, N, Z	B, D, F	S	P, R	DAL, SHA, TEP
RWR89#R626%&	0.626	3	S, W, N, Z	B, D	S	P, R	DAL, SHA, TEP
RWR89#R634%&	0.634	3	S, W, N, Z	B, D, F	S	P, R	DAL, SHA, TEP
RWR89#R642%&	0.642	3	S, W, N, Z	B, D	S	P, R	DAL, SHA, TEP
RWR89#R649%&	0.649	3	S, W, N, Z	B, D, F	S	P, R	DAL, SHA, TEP
RWR89#R657%&	0.657	3	S, W, N, Z	B, D	S	P, R	DAL, SHA, TEP
RWR89#R665%&	0.665	3	S, W, N, Z	B, D, F	S	P, R	DAL, SHA, TEP
RWR89#R673%&	0.673	3	S, W, N, Z	B, D	S	P, R	DAL, SHA, TEP
RWR89#R681%&	0.681	3	S, W, N, Z	B, D, F	S	P, R	DAL, SHA, TEP
RWR89#R690%&	0.690	3	S, W, N, Z	B, D	S	P, R	DAL, SHA, TEP
RWR89#R698%&	0.698	3	S, W, N, Z	B, D, F	S	P, R	DAL, SHA, TEP
RWR89#R706%&	0.706	3	S, W, N, Z	B, D	S	P, R	DAL, SHA, TEP
RWR89#R715%&	0.715	3	S, W, N, Z	B, D, F	S	P, R	DAL, SHA, TEP
RWR89#R723%&	0.723	3	S, W, N, Z	B, D	S	P, R	DAL, SHA, TEP
RWR89#R732%&	0.732	3	S, W, N, Z	B, D, F	S	P, R	DAL, SHA, TEP
RWR89#R741%&	0.741	3	S, W, N, Z	B, D	S	P, R	DAL, SHA, TEP

RWR89#R750%&	0.750	3	S, W, N, Z	B, D, F	S	P, R	DAL, SHA, TEP
RWR89#R759%&	0.759	3	S, W, N, Z	B, D	S	P, R	DAL, SHA, TEP
RWR89#R768%&	0.768	3	S, W, N, Z	B, D, F	S	P, R	DAL, SHA, TEP
RWR89#R776%&	0.776	3	S, W, N, Z	B, D	S	P, R	DAL, SHA, TEP
RWR89#R787%&	0.787	3	S, W, N, Z	B, D, F	S	P, R	DAL, SHA, TEP
RWR89#R796%&	0.796	3	S, W, N, Z	B, D	S	P, R	DAL, SHA, TEP
RWR89#R806%&	0.806	3	S, W, N, Z	B, D, F	S	P, R	DAL, SHA, TEP
RWR89#R816%&	0.816	3	S, W, N, Z	B, D	S	P, R	DAL, SHA, TEP
RWR89#R825%&	0.825	3	S, W, N, Z	B, D, F	S	P, R	DAL, SHA, TEP
RWR89#R835%&	0.835	3	S, W, N, Z	B, D	S	P, R	DAL, SHA, TEP
RWR89#R845%&	0.845	3	S, W, N, Z	B, D, F	S	P, R	DAL, SHA, TEP
RWR89#R856%&	0.856	3	S, W, N, Z	B, D	S	P, R	DAL, SHA, TEP
RWR89#R866%&	0.866	3	S, W, N, Z	B, D, F	S	P, R	DAL, SHA, TEP
RWR89#R876%&	0.876	3	S, W, N, Z	B, D	S	P, R	DAL, SHA, TEP
RWR89#R887%&	0.887	3	S, W, N, Z	B, D, F	S	P, R	DAL, SHA, TEP
RWR89#R898%&	0.898	3	S, W, N, Z	B, D	S	P, R	DAL, SHA, TEP
RWR89#R909%&	0.909	3	S, W, N, Z	B, D, F	S	P, R	DAL, SHA, TEP
RWR89#R920%&	0.920	3	S, W, N, Z	B, D	S	P, R	DAL, SHA, TEP
RWR89#R931%&	0.931	3	S, W, N, Z	B, D, F	S	P, R	DAL, SHA, TEP
RWR89#R942%&	0.942	3	S, W, N, Z	B, D	S	P, R	DAL, SHA, TEP
RWR89#R953%&	0.953	3	S, W, N, Z	B, D, F	S	P, R	DAL, SHA, TEP
RWR89#R965%&	0.965	3	S, W, N, Z	B, D	S	P, R	DAL, SHA, TEP
RWR89#R976%&	0.976	3	S, W, N, Z	B, D, F	S	P, R	DAL, SHA, TEP
RWR89#R988%&	0.988	3	S, W, N, Z	B, D	S	P, R	DAL, SHA, TEP
RWR89#1R00%&	1.00	3	S, W, N, Z	B, D, F	S	P, R	DAL, SHA, TEP
RWR89#1R01%&	1.01	3	S, W, N, Z	B, D	S	P, R	DAL, SHA, TEP
RWR89#1R02%&	1.02	3	S, W, N, Z	B, D, F	S	P, R	DAL, SHA, TEP
RWR89#1R04%&	1.04	3	S, W, N, Z	B, D	S	P, R	DAL, SHA, TEP
RWR89#1R05%&	1.05	3	S, W, N, Z	B, D, F	S	P, R	DAL, SHA, TEP
RWR89#1R06%&	1.06	3	S, W, N, Z	B, D	S	P, R	DAL, SHA, TEP
RWR89#1R07%&	1.07	3	S, W, N, Z	B, D, F	S	P, R	DAL, SHA, TEP
RWR89#1R09%&	1.09	3	S, W, N, Z	B, D	S	P, R	DAL, SHA, TEP
RWR89#1R10%&	1.10	3	S, W, N, Z	B, D, F	S	P, R	DAL, SHA, TEP
RWR89#1R11%&	1.11	3	S, W, N, Z	B, D	S	P, R	DAL, SHA, TEP
RWR89#1R13%&	1.13	3	S, W, N, Z	B, D, F	S	P, R	DAL, SHA, TEP
RWR89#1R14%&	1.14	3	S, W, N, Z	B, D	S	P, R	DAL, SHA, TEP
RWR89#1R15%&	1.15	3	S, W, N, Z	B, D, F	S	P, R	DAL, SHA, TEP
RWR89#1R17%&	1.17	3	S, W, N, Z	B, D	S	P, R	DAL, SHA, TEP
RWR89#1R18%&	1.18	3	S, W, N, Z	B, D, F	S	P, R	DAL, SHA, TEP
RWR89#1R20%&	1.20	3	S, W, N, Z	B, D	S	P, R	DAL, SHA, TEP
RWR89#1R21%&	1.21	3	S, W, N, Z	B, D, F	S	P, R	DAL, SHA, TEP
RWR89#1R23%&	1.23	3	S, W, N, Z	B, D	S	P, R	DAL, SHA, TEP
RWR89#1R24%&	1.24	3	S, W, N, Z	B, D, F	S	P, R	DAL, SHA, TEP
RWR89#1R26%&	1.26	3	S, W, N, Z	B, D	S	P, R	DAL, SHA, TEP
RWR89#1R27%&	1.27	3	S, W, N, Z	B, D, F	S	P, R	DAL, SHA, TEP
RWR89#1R29%&	1.29	3	S, W, N, Z	B, D	S	P, R	DAL, SHA, TEP
RWR89#1R30%&	1.30	3	S, W, N, Z	B, D, F	S	P, R	DAL, SHA, TEP

RWR89#1R32%&	1.32	3	S, W, N, Z	B, D	S	P, R	DAL, SHA, TEP
RWR89#1R33%&	1.33	3	S, W, N, Z	B, D, F	S	P, R	DAL, SHA, TEP
RWR89#1R35%&	1.35	3	S, W, N, Z	B, D	S	P, R	DAL, SHA, TEP
RWR89#1R37%&	1.37	3	S, W, N, Z	B, D, F	S	P, R	DAL, SHA, TEP
RWR89#1R38%&	1.38	3	S, W, N, Z	B, D	S	P, R	DAL, SHA, TEP
RWR89#1R40%&	1.40	3	S, W, N, Z	B, D, F	S	P, R	DAL, SHA, TEP
RWR89#1R42%&	1.42	3	S, W, N, Z	B, D	S	P, R	DAL, SHA, TEP
RWR89#1R43%&	1.43	3	S, W, N, Z	B, D, F	S	P, R	DAL, SHA, TEP
RWR89#1R45%&	1.45	3	S, W, N, Z	B, D	S	P, R	DAL, SHA, TEP
RWR89#1R47%&	1.47	3	S, W, N, Z	B, D, F	S	P, R	DAL, SHA, TEP
RWR89#1R49%&	1.49	3	S, W, N, Z	B, D	S	P, R	DAL, SHA, TEP
RWR89#1R50%&	1.50	3	S, W, N, Z	B, D, F	S	P, R	DAL, SHA, TEP
RWR89#1R52%&	1.52	3	S, W, N, Z	B, D	S	P, R	DAL, SHA, TEP
RWR89#1R54%&	1.54	3	S, W, N, Z	B, D, F	S	P, R	DAL, SHA, TEP
RWR89#1R56%&	1.56	3	S, W, N, Z	B, D	S	P, R	DAL, SHA, TEP
RWR89#1R58%&	1.58	3	S, W, N, Z	B, D, F	S	P, R	DAL, SHA, TEP
RWR89#1R60%&	1.60	3	S, W, N, Z	B, D	S	P, R	DAL, SHA, TEP
RWR89#1R62%&	1.62	3	S, W, N, Z	B, D, F	S	P, R	DAL, SHA, TEP
RWR89#1R64%&	1.64	3	S, W, N, Z	B, D	S	P, R	DAL, SHA, TEP
RWR89#1R65%&	1.65	3	S, W, N, Z	B, D, F	S	P, R	DAL, SHA, TEP
RWR89#1R67%&	1.67	3	S, W, N, Z	B, D	S	P, R	DAL, SHA, TEP
RWR89#1R69%&	1.69	3	S, W, N, Z	B, D, F	S	P, R	DAL, SHA, TEP
RWR89#1R72%&	1.72	3	S, W, N, Z	B, D	S	P, R	DAL, SHA, TEP
RWR89#1R74%&	1.74	3	S, W, N, Z	B, D, F	S	P, R	DAL, SHA, TEP
RWR89#1R76%&	1.76	3	S, W, N, Z	B, D	S	P, R	DAL, SHA, TEP
RWR89#1R78#&	1.78	3	S, W, N, Z	B, D, F	S	P, R	DAL, SHA, TEP
RWR89#1R80%&	1.80	3	S, W, N, Z	B, D, F	S	P, R	DAL, SHA, TEP
RWR89#1R82%&	1.82	3	S, W, N, Z	B, D, F	S	P, R	DAL, SHA, TEP
RWR89#1R84%&	1.84	3	S, W, N, Z	B, D	S	P, R	DAL, SHA, TEP
RWR89#1R87%&	1.87	3	S, W, N, Z	B, D, F	S	P, R	DAL, SHA, TEP
RWR89#1R89%&	1.89	3	S, W, N, Z	B, D	S	P, R	DAL, SHA, TEP
RWR89#1R91%&	1.91	3	S, W, N, Z	B, D, F	S	P, R	DAL, SHA, TEP
RWR89#1R93%&	1.93	3	S, W, N, Z	B, D	S	P, R	DAL, SHA, TEP
RWR89#1R96%&	1.96	3	S, W, N, Z	B, D, F	S	P, R	DAL, SHA, TEP
RWR89#1R98%&	1.98	3	S, W, N, Z	B, D	S	P, R	DAL, SHA, TEP
RWR89#2R00%&	2.00	3	S, W, N, Z	B, D, F	S	P, R	DAL, SHA, TEP
RWR89#2R03%&	2.03	3	S, W, N, Z	B, D	S	P, R	DAL, SHA, TEP
RWR89#2R05%&	2.05	3	S, W, N, Z	B, D, F	S	P, R	DAL, SHA, TEP
RWR89#2R08%&	2.08	3	S, W, N, Z	B, D	S	P, R	DAL, SHA, TEP
RWR89#2R10%&	2.10	3	S, W, N, Z	B, D, F	S	P, R	DAL, SHA, TEP
RWR89#2R13%&	2.13	3	S, W, N, Z	B, D	S	P, R	DAL, SHA, TEP
RWR89#2R15%&	2.15	3	S, W, N, Z	B, D, F	S	P, R	DAL, SHA, TEP
RWR89#2R18%&	2.18	3	S, W, N, Z	B, D	S	P, R	DAL, SHA, TEP
RWR89#2R21%&	2.21	3	S, W, N, Z	B, D, F	S	P, R	DAL, SHA, TEP
RWR89#2R23%&	2.23	3	S, W, N, Z	B, D	S	P, R	DAL, SHA, TEP
RWR89#2R26%&	2.26	3	S, W, N, Z	B, D, F	S	P, R	DAL, SHA, TEP
RWR89#2R29%&	2.29	3	S, W, N, Z	B, D	S	P, R	DAL, SHA, TEP

RWR89#2R32%&	2.32	3	S, W, N, Z	B, D, F	S	P, R	DAL, SHA, TEP
RWR89#2R34%&	2.34	3	S, W, N, Z	B, D	S	P, R	DAL, SHA, TEP
RWR89#2R37%&	2.37	3	S, W, N, Z	B, D, F	S	P, R	DAL, SHA, TEP
RWR89#2R40%&	2.40	3	S, W, N, Z	B, D	S	P, R	DAL, SHA, TEP
RWR89#2R43%&	2.43	3	S, W, N, Z	B, D, F	S	P, R	DAL, SHA, TEP
RWR89#2R46%&	2.46	3	S, W, N, Z	B, D	S	P, R	DAL, SHA, TEP
RWR89#2R49%&	2.49	3	S, W, N, Z	B, D, F	S	P, R	DAL, SHA, TEP
RWR89#2R52%&	2.52	3	S, W, N, Z	B, D	S	P, R	DAL, SHA, TEP
RWR89#2R55%&	2.55	3	S, W, N, Z	B, D, F	S	P, R	DAL, SHA, TEP
RWR89#2R58%&	2.58	3	S, W, N, Z	B, D	S	P, R	DAL, SHA, TEP
RWR89#2R61%&	2.61	3	S, W, N, Z	B, D, F	S	P, R	DAL, SHA, TEP
RWR89#2R64%&	2.64	3	S, W, N, Z	B, D	S	P, R	DAL, SHA, TEP
RWR89#2R67%&	2.67	3	S, W, N, Z	B, D, F	S	P, R	DAL, SHA, TEP
RWR89#2R71%&	2.71	3	S, W, N, Z	B, D	S	P, R	DAL, SHA, TEP
RWR89#2R74%&	2.74	3	S, W, N, Z	B, D, F	S	P, R	DAL, SHA, TEP
RWR89#2R77%&	2.77	3	S, W, N, Z	B, D	S	P, R	DAL, SHA, TEP
RWR89#2R80%&	2.80	3	S, W, N, Z	B, D, F	S	P, R	DAL, SHA, TEP
RWR89#2R84%&	2.84	3	S, W, N, Z	B, D	S	P, R	DAL, SHA, TEP
RWR89#2R87%&	2.87	3	S, W, N, Z	B, D, F	S	P, R	DAL, SHA, TEP
RWR89#2R91%&	2.91	3	S, W, N, Z	B, D	S	P, R	DAL, SHA, TEP
RWR89#2R94%&	2.94	3	S, W, N, Z	B, D, F	S	P, R	DAL, SHA, TEP
RWR89#2R98%&	2.98	3	S, W, N, Z	B, D	S	P, R	DAL, SHA, TEP
RWR89#3R01%&	3.01	3	S, W, N, Z	B, D, F	S	P, R	DAL, SHA, TEP
RWR89#3R05%&	3.05	3	S, W, N, Z	B, D	S	P, R	DAL, SHA, TEP
RWR89#3R09%&	3.09	3	S, W, N, Z	B, D, F	S	P, R	DAL, SHA, TEP
RWR89#3R12%&	3.12	3	S, W, N, Z	B, D	S	P, R	DAL, SHA, TEP
RWR89#3R16%&	3.16	3	S, W, N, Z	B, D, F	S	P, R	DAL, SHA, TEP
RWR89#3R20%&	3.20	3	S, W, N, Z	B, D	S	P, R	DAL, SHA, TEP
RWR89#3R24%&	3.24	3	S, W, N, Z	B, D, F	S	P, R	DAL, SHA, TEP
RWR89#3R28%&	3.28	3	S, W, N, Z	B, D	S	P, R	DAL, SHA, TEP
RWR89#3R32%&	3.32	3	S, W, N, Z	B, D, F	S	P, R	DAL, SHA, TEP
RWR89#3R36%&	3.36	3	S, W, N, Z	B, D	S	P, R	DAL, SHA, TEP
RWR89#3R40%&	3.40	3	S, W, N, Z	B, D, F	S	P, R	DAL, SHA, TEP
RWR89#3R44%&	3.44	3	S, W, N, Z	B, D	S	P, R	DAL, SHA, TEP
RWR89#3R48%&	3.48	3	S, W, N, Z	B, D, F	S	P, R	DAL, SHA, TEP
RWR89#3R52%&	3.52	3	S, W, N, Z	B, D	S	P, R	DAL, SHA, TEP
RWR89#3R57%&	3.57	3	S, W, N, Z	B, D, F	S	P, R	DAL, SHA, TEP
RWR89#3R61%&	3.61	3	S, W, N, Z	B, D	S	P, R	DAL, SHA, TEP
RWR89#3R65%&	3.65	3	S, W, N, Z	B, D, F	S	P, R	DAL, SHA, TEP
RWR89#3R70%&	3.70	3	S, W, N, Z	B, D	S	P, R	DAL, SHA, TEP
RWR89#3R74%&	3.74	3	S, W, N, Z	B, D, F	S	P, R	DAL, SHA, TEP
RWR89#3R79%&	3.79	3	S, W, N, Z	B, D	S	P, R	DAL, SHA, TEP
RWR89#3R83%&	3.83	3	S, W, N, Z	B, D, F	S	P, R	DAL, SHA, TEP
RWR89#3R88%&	3.88	3	S, W, N, Z	B, D	S	P, R	DAL, SHA, TEP
RWR89#3R92%&	3.92	3	S, W, N, Z	B, D, F	S	P, R	DAL, SHA, TEP
RWR89#3R97%&	3.97	3	S, W, N, Z	B, D	S	P, R	DAL, SHA, TEP
RWR89#4R02%&	4.02	3	S, W, N, Z	B, D, F	S	P, R	DAL, SHA, TEP

RWR89#4R07%&	4.07	3	S, W, N, Z	B, D	S	P, R	DAL, SHA, TEP
RWR89#4R12%&	4.12	3	S, W, N, Z	B, D, F	S	P, R	DAL, SHA, TEP
RWR89#4R17%&	4.17	3	S, W, N, Z	B, D	S	P, R	DAL, SHA, TEP
RWR89#4R22%&	4.22	3	S, W, N, Z	B, D, F	S	P, R	DAL, SHA, TEP
RWR89#4R27%&	4.27	3	S, W, N, Z	B, D	S	P, R	DAL, SHA, TEP
RWR89#4R32%&	4.32	3	S, W, N, Z	B, D, F	S	P, R	DAL, SHA, TEP
RWR89#4R37%&	4.37	3	S, W, N, Z	B, D	S	P, R	DAL, SHA, TEP
RWR89#4R42%&	4.42	3	S, W, N, Z	B, D, F	S	P, R	DAL, SHA, TEP
RWR89#4R48%&	4.48	3	S, W, N, Z	B, D	S	P, R	DAL, SHA, TEP
RWR89#4R53%&	4.53	3	S, W, N, Z	B, D, F	S	P, R	DAL, SHA, TEP
RWR89#4R59%&	4.59	3	S, W, N, Z	B, D	S	P, R	DAL, SHA, TEP
RWR89#4R64%&	4.64	3	S, W, N, Z	B, D, F	S	P, R	DAL, SHA, TEP
RWR89#4R70%&	4.70	3	S, W, N, Z	B, D	S	P, R	DAL, SHA, TEP
RWR89#4R75%&	4.75	3	S, W, N, Z	B, D, F	S	P, R	DAL, SHA, TEP
RWR89#4R81%&	4.81	3	S, W, N, Z	B, D	S	P, R	DAL, SHA, TEP
RWR89#4R87%&	4.87	3	S, W, N, Z	B, D, F	S	P, R	DAL, SHA, TEP
RWR89#4R93%&	4.93	3	S, W, N, Z	B, D	S	P, R	DAL, SHA, TEP
RWR89#4R99%&	4.99	3	S, W, N, Z	B, D, F	S	P, R	DAL, SHA, TEP
RWR89#5R05%&	5.05	3	S, W, N, Z	B, D	S	P, R	DAL, SHA, TEP
RWR89#5R11%&	5.11	3	S, W, N, Z	B, D, F	S	P, R	DAL, SHA, TEP
RWR89#5R17%&	5.17	3	S, W, N, Z	B, D	S	P, R	DAL, SHA, TEP
RWR89#5R23%&	5.23	3	S, W, N, Z	B, D, F	S	P, R	DAL, SHA, TEP
RWR89#5R30%&	5.30	3	S, W, N, Z	B, D	S	P, R	DAL, SHA, TEP
RWR89#5R36%&	5.36	3	S, W, N, Z	B, D, F	S	P, R	DAL, SHA, TEP
RWR89#5R42%&	5.42	3	S, W, N, Z	B, D	S	P, R	DAL, SHA, TEP
RWR89#5R49%&	5.49	3	S, W, N, Z	B, D, F	S	P, R	DAL, SHA, TEP
RWR89#5R56%&	5.56	3	S, W, N, Z	B, D	S	P, R	DAL, SHA, TEP
RWR89#5R62%&	5.62	3	S, W, N, Z	B, D, F	S	P, R	DAL, SHA, TEP
RWR89#5R69%&	5.69	3	S, W, N, Z	B, D	S	P, R	DAL, SHA, TEP
RWR89#5R76%&	5.76	3	S, W, N, Z	B, D, F	S	P, R	DAL, SHA, TEP
RWR89#5R83%&	5.83	3	S, W, N, Z	B, D	S	P, R	DAL, SHA, TEP
RWR89#5R90%&	5.90	3	S, W, N, Z	B, D, F	S	P, R	DAL, SHA, TEP
RWR89#5R97%&	5.97	3	S, W, N, Z	B, D	S	P, R	DAL, SHA, TEP
RWR89#6R04%&	6.04	3	S, W, N, Z	B, D, F	S	P, R	DAL, SHA, TEP
RWR89#6R12%&	6.12	3	S, W, N, Z	B, D	S	P, R	DAL, SHA, TEP
RWR89#6R19%&	6.19	3	S, W, N, Z	B, D, F	S	P, R	DAL, SHA, TEP
RWR89#6R26%&	6.26	3	S, W, N, Z	B, D	S	P, R	DAL, SHA, TEP
RWR89#6R34%&	6.34	3	S, W, N, Z	B, D, F	S	P, R	DAL, SHA, TEP
RWR89#6R42%&	6.42	3	S, W, N, Z	B, D	S	P, R	DAL, SHA, TEP
RWR89#6R49%&	6.49	3	S, W, N, Z	B, D, F	S	P, R	DAL, SHA, TEP
RWR89#6R57%&	6.57	3	S, W, N, Z	B, D	S	P, R	DAL, SHA, TEP
RWR89#6R65%&	6.65	3	S, W, N, Z	B, D, F	S	P, R	DAL, SHA, TEP
RWR89#6R73%&	6.73	3	S, W, N, Z	B, D	S	P, R	DAL, SHA, TEP
RWR89#6R81%&	6.81	3	S, W, N, Z	B, D, F	S	P, R	DAL, SHA, TEP
RWR89#6R90%&	6.90	3	S, W, N, Z	B, D	S	P, R	DAL, SHA, TEP
RWR89#6R98%&	6.98	3	S, W, N, Z	B, D, F	S	P, R	DAL, SHA, TEP
RWR89#7R06%&	7.06	3	S, W, N, Z	B, D	S	P, R	DAL, SHA, TEP

RWR89#7R15%&	7.15	3	S, W, N, Z	B, D, F	S	P, R	DAL, SHA, TEP
RWR89#7R23%&	7.23	3	S, W, N, Z	B, D	S	P, R	DAL, SHA, TEP
RWR89#7R32%&	7.32	3	S, W, N, Z	B, D, F	S	P, R	DAL, SHA, TEP
RWR89#7R41%&	7.41	3	S, W, N, Z	B, D	S	P, R	DAL, SHA, TEP
RWR89#7R50%&	7.50	3	S, W, N, Z	B, D, F	S	P, R	DAL, SHA, TEP
RWR89#7R59%&	7.59	3	S, W, N, Z	B, D	S	P, R	DAL, SHA, TEP
RWR89#7R68%&	7.68	3	S, W, N, Z	B, D, F	S	P, R	DAL, SHA, TEP
RWR89#7R77%&	7.77	3	S, W, N, Z	B, D	S	P, R	DAL, SHA, TEP
RWR89#7R87%&	7.87	3	S, W, N, Z	B, D, F	S	P, R	DAL, SHA, TEP
RWR89#7R96%&	7.96	3	S, W, N, Z	B, D	S	P, R	DAL, SHA, TEP
RWR89#8R06%&	8.06	3	S, W, N, Z	B, D, F	S	P, R	DAL, SHA, TEP
RWR89#8R16%&	8.16	3	S, W, N, Z	B, D	S	P, R	DAL, SHA, TEP
RWR89#8R25%&	8.25	3	S, W, N, Z	B, D, F	S	P, R	DAL, SHA, TEP
RWR89#8R35%&	8.35	3	S, W, N, Z	B, D	S	P, R	DAL, SHA, TEP
RWR89#8R45%&	8.45	3	S, W, N, Z	B, D, F	S	P, R	DAL, SHA, TEP
RWR89#8R56%&	8.56	3	S, W, N, Z	B, D	S	P, R	DAL, SHA, TEP
RWR89#8R66%&	8.66	3	S, W, N, Z	B, D, F	S	P, R	DAL, SHA, TEP
RWR89#8R76%&	8.76	3	S, W, N, Z	B, D	S	P, R	DAL, SHA, TEP
RWR89#8R87%&	8.87	3	S, W, N, Z	B, D, F	S	P, R	DAL, SHA, TEP
RWR89#8R98%&	8.98	3	S, W, N, Z	B, D	S	P, R	DAL, SHA, TEP
RWR89#9R09%&	9.09	3	S, W, N, Z	B, D, F	S	P, R	DAL, SHA, TEP
RWR89#9R20%&	9.20	3	S, W, N, Z	B, D	S	P, R	DAL, SHA, TEP
RWR89#9R31%&	9.31	3	S, W, N, Z	B, D, F	S	P, R	DAL, SHA, TEP
RWR89#9R42%&	9.42	3	S, W, N, Z	B, D	S	P, R	DAL, SHA, TEP
RWR89#9R53%&	9.53	3	S, W, N, Z	B, D, F	S	P, R	DAL, SHA, TEP
RWR89#9R65%&	9.65	3	S, W, N, Z	B, D	S	P, R	DAL, SHA, TEP
RWR89#9R76%&	9.76	3	S, W, N, Z	B, D, F	S	P, R	DAL, SHA, TEP
RWR89#9R88%&	9.88	3	S, W, N, Z	B, D	S	P, R	DAL, SHA, TEP
RWR89#10R0%&	10.0	3	S, W, N, Z	B, D, F	S	P, R	DAL, SHA, TEP
RWR89#10R1%&	10.1	3	S, W, N, Z	B, D	S	P, R	DAL, SHA, TEP
RWR89#10R2%&	10.2	3	S, W, N, Z	B, D, F	S	P, R	DAL, SHA, TEP
RWR89#10R4%&	10.4	3	S, W, N, Z	B, D	S	P, R	DAL, SHA, TEP
RWR89#10R5%&	10.5	3	S, W, N, Z	B, D, F	S	P, R	DAL, SHA, TEP
RWR89#10R6%&	10.6	3	S, W, N, Z	B, D	S	P, R	DAL, SHA, TEP
RWR89#10R7%&	10.7	3	S, W, N, Z	B, D, F	S	P, R	DAL, SHA, TEP
RWR89#10R9%&	10.9	3	S, W, N, Z	B, D	S	P, R	DAL, SHA, TEP
RWR89#11R0%&	11.0	3	S, W, N, Z	B, D, F	S	P, R	DAL, SHA, TEP
RWR89#11R1%&	11.1	3	S, W, N, Z	B, D	S	P, R	DAL, SHA, TEP
RWR89#11R3%&	11.3	3	S, W, N, Z	B, D, F	S	P, R	DAL, SHA, TEP
RWR89#11R4%&	11.4	3	S, W, N, Z	B, D	S	P, R	DAL, SHA, TEP
RWR89#11R5%&	11.5	3	S, W, N, Z	B, D, F	S	P, R	DAL, SHA, TEP
RWR89#11R7%&	11.7	3	S, W, N, Z	B, D	S	P, R	DAL, SHA, TEP
RWR89#11R8%&	11.8	3	S, W, N, Z	B, D, F	S	P, R	DAL, SHA, TEP
RWR89#12R0%&	12.0	3	S, W, N, Z	B, D	S	P, R	DAL, SHA, TEP
RWR89#12R1%&	12.1	3	S, W, N, Z	B, D, F	S	P, R	DAL, SHA, TEP
RWR89#12R3%&	12.3	3	S, W, N, Z	B, D	S	P, R	DAL, SHA, TEP
RWR89#12R4%&	12.4	3	S, W, N, Z	B, D, F	S	P, R	DAL, SHA, TEP

RWR89#12R6%&	12.6	3	S, W, N, Z	B, D	S	P, R	DAL, SHA, TEP
RWR89#12R7%&	12.7	3	S, W, N, Z	B, D, F	S	P, R	DAL, SHA, TEP
RWR89#12R9%&	12.9	3	S, W, N, Z	B, D	S	P, R	DAL, SHA, TEP
RWR89#13R0%&	13.0	3	S, W, N, Z	B, D, F	S	P, R	DAL, SHA, TEP
RWR89#13R2%&	13.2	3	S, W, N, Z	B, D	S	P, R	DAL, SHA, TEP
RWR89#13R3%&	13.3	3	S, W, N, Z	B, D, F	S	P, R	DAL, SHA, TEP
RWR89#13R5%&	13.5	3	S, W, N, Z	B, D	S	P, R	DAL, SHA, TEP
RWR89#13R7%&	13.7	3	S, W, N, Z	B, D, F	S	P, R	DAL, SHA, TEP
RWR89#13R8%&	13.8	3	S, W, N, Z	B, D	S	P, R	DAL, SHA, TEP
RWR89#14R0%&	14.0	3	S, W, N, Z	B, D, F	S	P, R	DAL, SHA, TEP
RWR89#14R2%&	14.2	3	S, W, N, Z	B, D	S	P, R	DAL, SHA, TEP
RWR89#14R3%&	14.3	3	S, W, N, Z	B, D, F	S	P, R	DAL, SHA, TEP
RWR89#14R5%&	14.5	3	S, W, N, Z	B, D	S	P, R	DAL, SHA, TEP
RWR89#14R7%&	14.7	3	S, W, N, Z	B, D, F	S	P, R	DAL, SHA, TEP
RWR89#14R9%&	14.9	3	S, W, N, Z	B, D	S	P, R	DAL, SHA, TEP
RWR89#15R0%&	15.0	3	S, W, N, Z	B, D, F	S	P, R	DAL, SHA, TEP
RWR89#15R2%&	15.2	3	S, W, N, Z	B, D	S	P, R	DAL, SHA, TEP
RWR89#15R4%&	15.4	3	S, W, N, Z	B, D, F	S	P, R	DAL, SHA, TEP
RWR89#15R6%&	15.6	3	S, W, N, Z	B, D	S	P, R	DAL, SHA, TEP
RWR89#15R8%&	15.8	3	S, W, N, Z	B, D, F	S	P, R	DAL, SHA, TEP
RWR89#16R0%&	16.0	3	S, W, N, Z	B, D	S	P, R	DAL, SHA, TEP
RWR89#16R2%&	16.2	3	S, W, N, Z	B, D, F	S	P, R	DAL, SHA, TEP
RWR89#16R4%&	16.4	3	S, W, N, Z	B, D	S	P, R	DAL, SHA, TEP
RWR89#16R5%&	16.5	3	S, W, N, Z	B, D, F	S	P, R	DAL, SHA, TEP
RWR89#16R7%&	16.7	3	S, W, N, Z	B, D	S	P, R	DAL, SHA, TEP
RWR89#16R9%&	16.9	3	S, W, N, Z	B, D, F	S	P, R	DAL, SHA, TEP
RWR89#17R2%&	17.2	3	S, W, N, Z	B, D	S	P, R	DAL, SHA, TEP
RWR89#17R4%&	17.4	3	S, W, N, Z	B, D, F	S	P, R	DAL, SHA, TEP
RWR89#17R6%&	17.6	3	S, W, N, Z	B, D	S	P, R	DAL, SHA, TEP
RWR89#17R8%&	17.8	3	S, W, N, Z	B, D, F	S	P, R	DAL, SHA, TEP
RWR89#18R0%&	18.0	3	S, W, N, Z	B, D, F	S	P, R	DAL, SHA, TEP
RWR89#18R2%&	18.2	3	S, W, N, Z	B, D, F	S	P, R	DAL, SHA, TEP
RWR89#18R4%&	18.4	3	S, W, N, Z	B, D	S	P, R	DAL, SHA, TEP
RWR89#18R7%&	18.7	3	S, W, N, Z	B, D, F	S	P, R	DAL, SHA, TEP
RWR89#18R9%&	18.9	3	S, W, N, Z	B, D	S	P, R	DAL, SHA, TEP
RWR89#19R1%&	19.1	3	S, W, N, Z	B, D, F	S	P, R	DAL, SHA, TEP
RWR89#19R3%&	19.3	3	S, W, N, Z	B, D	S	P, R	DAL, SHA, TEP
RWR89#19R6%&	19.6	3	S, W, N, Z	B, D, F	S	P, R	DAL, SHA, TEP
RWR89#19R8%&	19.8	3	S, W, N, Z	B, D	S	P, R	DAL, SHA, TEP
RWR89#20R0%&	20.0	3	S, W, N, Z	B, D, F	S	P, R	DAL, SHA, TEP
RWR89#20R3%&	20.3	3	S, W, N, Z	B, D	S	P, R	DAL, SHA, TEP
RWR89#20R5%&	20.5	3	S, W, N, Z	B, D, F	S	P, R	DAL, SHA, TEP
RWR89#20R8%&	20.8	3	S, W, N, Z	B, D	S	P, R	DAL, SHA, TEP
RWR89#21R0%&	21.0	3	S, W, N, Z	B, D, F	S	P, R	DAL, SHA, TEP
RWR89#21R3%&	21.3	3	S, W, N, Z	B, D	S	P, R	DAL, SHA, TEP
RWR89#21R5%&	21.5	3	S, W, N, Z	B, D, F	S	P, R	DAL, SHA, TEP
RWR89#21R8%&	21.8	3	S, W, N, Z	B, D	S	P, R	DAL, SHA, TEP

RWR89#22R1%&	22.1	3	S, W, N, Z	B, D, F	S	P, R	DAL, SHA, TEP
RWR89#22R3%&	22.3	3	S, W, N, Z	B, D	S	P, R	DAL, SHA, TEP
RWR89#22R6%&	22.6	3	S, W, N, Z	B, D, F	S	P, R	DAL, SHA, TEP
RWR89#22R9%&	22.9	3	S, W, N, Z	B, D	S	P, R	DAL, SHA, TEP
RWR89#23R2%&	23.2	3	S, W, N, Z	B, D, F	S	P, R	DAL, SHA, TEP
RWR89#23R4%&	23.4	3	S, W, N, Z	B, D	S	P, R	DAL, SHA, TEP
RWR89#23R7%&	23.7	3	S, W, N, Z	B, D, F	S	P, R	DAL, SHA, TEP
RWR89#24R0%&	24.0	3	S, W, N, Z	B, D	S	P, R	DAL, SHA, TEP
RWR89#24R3%&	24.3	3	S, W, N, Z	B, D, F	S	P, R	DAL, SHA, TEP
RWR89#24R6%&	24.6	3	S, W, N, Z	B, D	S	P, R	DAL, SHA, TEP
RWR89#24R9%&	24.9	3	S, W, N, Z	B, D, F	S	P, R	DAL, SHA, TEP
RWR89#25R2%&	25.2	3	S, W, N, Z	B, D	S	P, R	DAL, SHA, TEP
RWR89#25R5%&	25.5	3	S, W, N, Z	B, D, F	S	P, R	DAL, SHA, TEP
RWR89#25R8%&	25.8	3	S, W, N, Z	B, D	S	P, R	DAL, SHA, TEP
RWR89#26R1%&	26.1	3	S, W, N, Z	B, D, F	S	P, R	DAL, SHA, TEP
RWR89#26R4%&	26.4	3	S, W, N, Z	B, D	S	P, R	DAL, SHA, TEP
RWR89#26R7%&	26.7	3	S, W, N, Z	B, D, F	S	P, R	DAL, SHA, TEP
RWR89#27R1%&	27.1	3	S, W, N, Z	B, D	S	P, R	DAL, SHA, TEP
RWR89#27R4%&	27.4	3	S, W, N, Z	B, D, F	S	P, R	DAL, SHA, TEP
RWR89#27R7%&	27.7	3	S, W, N, Z	B, D	S	P, R	DAL, SHA, TEP
RWR89#28R0%&	28.0	3	S, W, N, Z	B, D, F	S	P, R	DAL, SHA, TEP
RWR89#28R4%&	28.4	3	S, W, N, Z	B, D	S	P, R	DAL, SHA, TEP
RWR89#28R7%&	28.7	3	S, W, N, Z	B, D, F	S	P, R	DAL, SHA, TEP
RWR89#29R1%&	29.1	3	S, W, N, Z	B, D	S	P, R	DAL, SHA, TEP
RWR89#29R4%&	29.4	3	S, W, N, Z	B, D, F	S	P, R	DAL, SHA, TEP
RWR89#29R8%&	29.8	3	S, W, N, Z	B, D	S	P, R	DAL, SHA, TEP
RWR89#30R1%&	30.1	3	S, W, N, Z	B, D, F	S	P, R	DAL, SHA, TEP
RWR89#30R5%&	30.5	3	S, W, N, Z	B, D	S	P, R	DAL, SHA, TEP
RWR89#30R9%&	30.9	3	S, W, N, Z	B, D, F	S	P, R	DAL, SHA, TEP
RWR89#31R2%&	31.2	3	S, W, N, Z	B, D	S	P, R	DAL, SHA, TEP
RWR89#31R6%&	31.6	3	S, W, N, Z	B, D, F	S	P, R	DAL, SHA, TEP
RWR89#32R0%&	32.0	3	S, W, N, Z	B, D	S	P, R	DAL, SHA, TEP
RWR89#32R4%&	32.4	3	S, W, N, Z	B, D, F	S	P, R	DAL, SHA, TEP
RWR89#32R8%&	32.8	3	S, W, N, Z	B, D	S	P, R	DAL, SHA, TEP
RWR89#33R2%&	33.2	3	S, W, N, Z	B, D, F	S	P, R	DAL, SHA, TEP
RWR89#33R6%&	33.6	3	S, W, N, Z	B, D	S	P, R	DAL, SHA, TEP
RWR89#34R0%&	34.0	3	S, W, N, Z	B, D, F	S	P, R	DAL, SHA, TEP
RWR89#34R4%&	34.4	3	S, W, N, Z	B, D	S	P, R	DAL, SHA, TEP
RWR89#34R8%&	34.8	3	S, W, N, Z	B, D, F	S	P, R	DAL, SHA, TEP
RWR89#35R2%&	35.2	3	S, W, N, Z	B, D	S	P, R	DAL, SHA, TEP
RWR89#35R7%&	35.7	3	S, W, N, Z	B, D, F	S	P, R	DAL, SHA, TEP
RWR89#36R1%&	36.1	3	S, W, N, Z	B, D	S	P, R	DAL, SHA, TEP
RWR89#36R5%&	36.5	3	S, W, N, Z	B, D, F	S	P, R	DAL, SHA, TEP
RWR89#37R0%&	37.0	3	S, W, N, Z	B, D	S	P, R	DAL, SHA, TEP
RWR89#37R4%&	37.4	3	S, W, N, Z	B, D, F	S	P, R	DAL, SHA, TEP
RWR89#37R9%&	37.9	3	S, W, N, Z	B, D	S	P, R	DAL, SHA, TEP
RWR89#38R3%&	38.3	3	S, W, N, Z	B, D, F	S	P, R	DAL, SHA, TEP

RWR89#38R8%&	38.8	3	S, W, N, Z	B, D	S	P, R	DAL, SHA, TEP
RWR89#39R2%&	39.2	3	S, W, N, Z	B, D, F	S	P, R	DAL, SHA, TEP
RWR89#39R7%&	39.7	3	S, W, N, Z	B, D	S	P, R	DAL, SHA, TEP
RWR89#40R2%&	40.2	3	S, W, N, Z	B, D, F	S	P, R	DAL, SHA, TEP
RWR89#40R7%&	40.7	3	S, W, N, Z	B, D	S	P, R	DAL, SHA, TEP
RWR89#41R2%&	41.2	3	S, W, N, Z	B, D, F	S	P, R	DAL, SHA, TEP
RWR89#41R7%&	41.7	3	S, W, N, Z	B, D	S	P, R	DAL, SHA, TEP
RWR89#42R2%&	42.2	3	S, W, N, Z	B, D, F	S	P, R	DAL, SHA, TEP
RWR89#42R7%&	42.7	3	S, W, N, Z	B, D	S	P, R	DAL, SHA, TEP
RWR89#43R2%&	43.2	3	S, W, N, Z	B, D, F	S	P, R	DAL, SHA, TEP
RWR89#43R7%&	43.7	3	S, W, N, Z	B, D	S	P, R	DAL, SHA, TEP
RWR89#44R2%&	44.2	3	S, W, N, Z	B, D, F	S	P, R	DAL, SHA, TEP
RWR89#44R8%&	44.8	3	S, W, N, Z	B, D	S	P, R	DAL, SHA, TEP
RWR89#45R3%&	45.3	3	S, W, N, Z	B, D, F	S	P, R	DAL, SHA, TEP
RWR89#45R9%&	45.9	3	S, W, N, Z	B, D	S	P, R	DAL, SHA, TEP
RWR89#46R4%&	46.4	3	S, W, N, Z	B, D, F	S	P, R	DAL, SHA, TEP
RWR89#47R0%&	47.0	3	S, W, N, Z	B, D	S	P, R	DAL, SHA, TEP
RWR89#47R5%&	47.5	3	S, W, N, Z	B, D, F	S	P, R	DAL, SHA, TEP
RWR89#48R1%&	48.1	3	S, W, N, Z	B, D	S	P, R	DAL, SHA, TEP
RWR89#48R7%&	48.7	3	S, W, N, Z	B, D, F	S	P, R	DAL, SHA, TEP
RWR89#49R3%&	49.3	3	S, W, N, Z	B, D	S	P, R	DAL, SHA, TEP
RWR89#49R9%&	49.9	3	S, W, N, Z	B, D, F	S	P, R	DAL, SHA, TEP
RWR89#50R5%&	50.5	3	S, W, N, Z	B, D	S	P, R	DAL, SHA, TEP
RWR89#51R1%&	51.1	3	S, W, N, Z	B, D, F	S	P, R	DAL, SHA, TEP
RWR89#51R7%&	51.7	3	S, W, N, Z	B, D	S	P, R	DAL, SHA, TEP
RWR89#52R3%&	52.3	3	S, W, N, Z	B, D, F	S	P, R	DAL, SHA, TEP
RWR89#53R0%&	53.0	3	S, W, N, Z	B, D	S	P, R	DAL, SHA, TEP
RWR89#53R6%&	53.6	3	S, W, N, Z	B, D, F	S	P, R	DAL, SHA, TEP
RWR89#54R2%&	54.2	3	S, W, N, Z	B, D	S	P, R	DAL, SHA, TEP
RWR89#54R9%&	54.9	3	S, W, N, Z	B, D, F	S	P, R	DAL, SHA, TEP
RWR89#55R6%&	55.6	3	S, W, N, Z	B, D	S	P, R	DAL, SHA, TEP
RWR89#56R2%&	56.2	3	S, W, N, Z	B, D, F	S	P, R	DAL, SHA, TEP
RWR89#56R9%&	56.9	3	S, W, N, Z	B, D	S	P, R	DAL, SHA, TEP
RWR89#57R6%&	57.6	3	S, W, N, Z	B, D, F	S	P, R	DAL, SHA, TEP
RWR89#58R3%&	58.3	3	S, W, N, Z	B, D	S	P, R	DAL, SHA, TEP
RWR89#59R0%&	59.0	3	S, W, N, Z	B, D, F	S	P, R	DAL, SHA, TEP
RWR89#59R7%&	59.7	3	S, W, N, Z	B, D	S	P, R	DAL, SHA, TEP
RWR89#60R4%&	60.4	3	S, W, N, Z	B, D, F	S	P, R	DAL, SHA, TEP
RWR89#61R2%&	61.2	3	S, W, N, Z	B, D	S	P, R	DAL, SHA, TEP
RWR89#61R9%&	61.9	3	S, W, N, Z	B, D, F	S	P, R	DAL, SHA, TEP
RWR89#62R6%&	62.6	3	S, W, N, Z	B, D	S	P, R	DAL, SHA, TEP
RWR89#63R4%&	63.4	3	S, W, N, Z	B, D, F	S	P, R	DAL, SHA, TEP
RWR89#64R2%&	64.2	3	S, W, N, Z	B, D	S	P, R	DAL, SHA, TEP
RWR89#64R9%&	64.9	3	S, W, N, Z	B, D, F	S	P, R	DAL, SHA, TEP
RWR89#65R7%&	65.7	3	S, W, N, Z	B, D	S	P, R	DAL, SHA, TEP
RWR89#66R5%&	66.5	3	S, W, N, Z	B, D, F	S	P, R	DAL, SHA, TEP
RWR89#67R3%&	67.3	3	S, W, N, Z	B, D	S	P, R	DAL, SHA, TEP

RWR89#68R1%&	68.1	3	S, W, N, Z	B, D, F	S	P, R	DAL, SHA, TEP
RWR89#69R0%&	69.0	3	S, W, N, Z	B, D	S	P, R	DAL, SHA, TEP
RWR89#69R8%&	69.8	3	S, W, N, Z	B, D, F	S	P, R	DAL, SHA, TEP
RWR89#70R6%&	70.6	3	S, W, N, Z	B, D	S	P, R	DAL, SHA, TEP
RWR89#71R5%&	71.5	3	S, W, N, Z	B, D, F	S	P, R	DAL, SHA, TEP
RWR89#72R3%&	72.3	3	S, W, N, Z	B, D	S	P, R	DAL, SHA, TEP
RWR89#73R2%&	73.2	3	S, W, N, Z	B, D, F	S	P, R	DAL, SHA, TEP
RWR89#74R1%&	74.1	3	S, W, N, Z	B, D	S	P, R	DAL, SHA, TEP
RWR89#75R0%&	75.0	3	S, W, N, Z	B, D, F	S	P, R	DAL, SHA, TEP
RWR89#75R9%&	75.9	3	S, W, N, Z	B, D	S	P, R	DAL, SHA, TEP
RWR89#76R8%&.	76.8	3	S, W, N, Z	B, D, F	S	P, R	DAL, SHA, TEP
RWR89#77R7%&.	77.7	3	S, W, N, Z	B, D	S	P, R	DAL, SHA, TEP
RWR89#78R7%&	78.7	3	S, W, N, Z	B, D, F	S	P, R	DAL, SHA, TEP
RWR89#79R6%&	79.6	3	S, W, N, Z	B, D	S	P, R	DAL, SHA, TEP
RWR89#80R6%&	80.6	3	S, W, N, Z	B, D, F	S	P, R	DAL, SHA, TEP
RWR89#81R6%&	81.6	3	S, W, N, Z	B, D	S	P, R	DAL, SHA, TEP
RWR89#82R5%&	82.5	3	S, W, N, Z	B, D, F	S	P, R	DAL, SHA, TEP
RWR89#83R5%&	83.5	3	S, W, N, Z	B, D	S	P, R	DAL, SHA, TEP
RWR89#84R5%&	84.5	3	S, W, N, Z	B, D, F	S	P, R	DAL, SHA, TEP
RWR89#85R6%&	85.6	3	S, W, N, Z	B, D	S	P, R	DAL, SHA, TEP
RWR89#86R6%&	86.6	3	S, W, N, Z	B, D, F	S	P, R	DAL, SHA, TEP
RWR89#87R6%&	87.6	3	S, W, N, Z	B, D	S	P, R	DAL, SHA, TEP
RWR89#88R7%&	88.7	3	S, W, N, Z	B, D, F	S	P, R	DAL, SHA, TEP
RWR89#89R8%&	89.8	3	S, W, N, Z	B, D	S	P, R	DAL, SHA, TEP
RWR89#90R9%&	90.9	3	S, W, N, Z	B, D, F	S	P, R	DAL, SHA, TEP
RWR89#92R0%&	92.0	3	S, W, N, Z	B, D	S	P, R	DAL, SHA, TEP
RWR89#93R1%&	93.1	3	S, W, N, Z	B, D, F	S	P, R	DAL, SHA, TEP
RWR89#94R2%&	94.2	3	S, W, N, Z	B, D	S	P, R	DAL, SHA, TEP
RWR89#95R3%&	95.3	3	S, W, N, Z	B, D, F	S	P, R	DAL, SHA, TEP
RWR89#96R5%&	96.5	3	S, W, N, Z	B, D	S	P, R	DAL, SHA, TEP
RWR89#97R6%&	97.6	3	S, W, N, Z	B, D, F	S	P, R	DAL, SHA, TEP
RWR89#98R8%&	98.8	3	S, W, N, Z	B, D	S	P, R	DAL, SHA, TEP
RWR89#1000%&	100	3	S, W, N, Z	B, D, F	S	P, R	DAL, SHA, TEP
RWR89#1010%&	101	3	S, W, N, Z	B, D	S	P, R	DAL, SHA, TEP
RWR89#1020%&	102	3	S, W, N, Z	B, D, F	S	P, R	DAL, SHA, TEP
RWR89#1040%&	104	3	S, W, N, Z	B, D	S	P, R	DAL, SHA, TEP
RWR89#1050%&	105	3	S, W, N, Z	B, D, F	S	P, R	DAL, SHA, TEP
RWR89#1060%&	106	3	S, W, N, Z	B, D	S	P, R	DAL, SHA, TEP
RWR89#1070%&	107	3	S, W, N, Z	B, D, F	S	P, R	DAL, SHA, TEP
RWR89#1090%&	109	3	S, W, N, Z	B, D	S	P, R	DAL, SHA, TEP
RWR89#1100%&	110	3	S, W, N, Z	B, D, F	S	P, R	DAL, SHA, TEP
RWR89#1110%&	111	3	S, W, N, Z	B, D	S	P, R	DAL, SHA, TEP
RWR89#1130%&	113	3	S, W, N, Z	B, D, F	S	P, R	DAL, SHA, TEP
RWR89#1140%&	114	3	S, W, N, Z	B, D	S	P, R	DAL, SHA, TEP
RWR89#1150%&	115	3	S, W, N, Z	B, D, F	S	P, R	DAL, SHA, TEP
RWR89#1170%&	117	3	S, W, N, Z	B, D	S	P, R	DAL, SHA, TEP
RWR89#1180%&	118	3	S, W, N, Z	B, D, F	S	P, R	DAL, SHA, TEP

RWR89#1200%&	120	3	S, W, N, Z	B, D	S	P, R	DAL, SHA, TEP
RWR89#1210%&	121	3	S, W, N, Z	B, D, F	S	P, R	DAL, SHA, TEP
RWR89#1230%&	123	3	S, W, N, Z	B, D	S	P, R	DAL, SHA, TEP
RWR89#1240%&	124	3	S, W, N, Z	B, D, F	S	P, R	DAL, SHA, TEP
RWR89#1260%&	126	3	S, W, N, Z	B, D	S	P, R	DAL, SHA, TEP
RWR89#1270%&	127	3	S, W, N, Z	B, D, F	S	P, R	DAL, SHA, TEP
RWR89#1290%&	129	3	S, W, N, Z	B, D	S	P, R	DAL, SHA, TEP
RWR89#1300%&	130	3	S, W, N, Z	B, D, F	S	P, R	DAL, SHA, TEP
RWR89#1320%&	132	3	S, W, N, Z	B, D	S	P, R	DAL, SHA, TEP
RWR89#1330%&	133	3	S, W, N, Z	B, D, F	S	P, R	DAL, SHA, TEP
RWR89#1350%&	135	3	S, W, N, Z	B, D	S	P, R	DAL, SHA, TEP
RWR89#1370%&	137	3	S, W, N, Z	B, D, F	S	P, R	DAL, SHA, TEP
RWR89#1380%&	138	3	S, W, N, Z	B, D	S	P, R	DAL, SHA, TEP
RWR89#1400%&	140	3	S, W, N, Z	B, D, F	S	P, R	DAL, SHA, TEP
RWR89#1420%&	142	3	S, W, N, Z	B, D	S	P, R	DAL, SHA, TEP
RWR89#1430%&	143	3	S, W, N, Z	B, D, F	S	P, R	DAL, SHA, TEP
RWR89#1450%&	145	3	S, W, N, Z	B, D	S	P, R	DAL, SHA, TEP
RWR89#1470%&	147	3	S, W, N, Z	B, D, F	S	P, R	DAL, SHA, TEP
RWR89#1490%&	149	3	S, W, N, Z	B, D	S	P, R	DAL, SHA, TEP
RWR89#1500%&	150	3	S, W, N, Z	B, D, F	S	P, R	DAL, SHA, TEP
RWR89#1520%&	152	3	S, W, N, Z	B, D	S	P, R	DAL, SHA, TEP
RWR89#1540%&	154	3	S, W, N, Z	B, D, F	S	P, R	DAL, SHA, TEP
RWR89#1560%&	156	3	S, W, N, Z	B, D	S	P, R	DAL, SHA, TEP
RWR89#1580%&	158	3	S, W, N, Z	B, D, F	S	P, R	DAL, SHA, TEP
RWR89#1600%&	160	3	S, W, N, Z	B, D	S	P, R	DAL, SHA, TEP
RWR89#1620%&	162	3	S, W, N, Z	B, D, F	S	P, R	DAL, SHA, TEP
RWR89#1640%&	164	3	S, W, N, Z	B, D	S	P, R	DAL, SHA, TEP
RWR89#1650%&	165	3	S, W, N, Z	B, D, F	S	P, R	DAL, SHA, TEP
RWR89#1670%&	167	3	S, W, N, Z	B, D	S	P, R	DAL, SHA, TEP
RWR89#1690%&	169	3	S, W, N, Z	B, D, F	S	P, R	DAL, SHA, TEP
RWR89#1720%&	172	3	S, W, N, Z	B, D	S	P, R	DAL, SHA, TEP
RWR89#1740%&	174	3	S, W, N, Z	B, D, F	S	P, R	DAL, SHA, TEP
RWR89#1760%&	176	3	S, W, N, Z	B, D	S	P, R	DAL, SHA, TEP
RWR89#1780%&	178	3	S, W, N, Z	B, D, F	S	P, R	DAL, SHA, TEP
RWR89#1800%&	180	3	S, W, N, Z	B, D, F	S	P, R	DAL, SHA, TEP
RWR89#1820%&	182	3	S, W, N, Z	B, D, F	S	P, R	DAL, SHA, TEP
RWR89#1840%&	184	3	S, W, N, Z	B, D	S	P, R	DAL, SHA, TEP
RWR89#1870%&	187	3	S, W, N, Z	B, D, F	S	P, R	DAL, SHA, TEP
RWR89#1890%&	189	3	S, W, N, Z	B, D	S	P, R	DAL, SHA, TEP
RWR89#1910%&	191	3	S, W, N, Z	B, D, F	S	P, R	DAL, SHA, TEP
RWR89#1930%&	193	3	S, W, N, Z	B, D	S	P, R	DAL, SHA, TEP
RWR89#1960%&	196	3	S, W, N, Z	B, D, F	S	P, R	DAL, SHA, TEP
RWR89#1980%&	198	3	S, W, N, Z	B, D	S	P, R	DAL, SHA, TEP
RWR89#2000%&	200	3	S, W, N, Z	B, D, F	S	P, R	DAL, SHA, TEP
RWR89#2030%&	203	3	S, W, N, Z	B, D	S	P, R	DAL, SHA, TEP
RWR89#2050%&	205	3	S, W, N, Z	B, D, F	S	P, R	DAL, SHA, TEP
RWR89#2080%&	208	3	S, W, N, Z	B, D	S	P, R	DAL, SHA, TEP

RWR89#2100%&	210	3	S, W, N, Z	B, D, F	S	P, R	DAL, SHA, TEP
RWR89#2130%&	213	3	S, W, N, Z	B, D	S	P, R	DAL, SHA, TEP
RWR89#2150%&	215	3	S, W, N, Z	B, D, F	S	P, R	DAL, SHA, TEP
RWR89#2180%&	218	3	S, W, N, Z	B, D	S	P, R	DAL, SHA, TEP
RWR89#2210%&	221	3	S, W, N, Z	B, D, F	S	P, R	DAL, SHA, TEP
RWR89#2230%&	223	3	S, W, N, Z	B, D	S	P, R	DAL, SHA, TEP
RWR89#2260%&	226	3	S, W, N, Z	B, D, F	S	P, R	DAL, SHA, TEP
RWR89#2290%&	229	3	S, W, N, Z	B, D	S	P, R	DAL, SHA, TEP
RWR89#2320%&	232	3	S, W, N, Z	B, D, F	S	P, R	DAL, SHA, TEP
RWR89#2340%&	234	3	S, W, N, Z	B, D	S	P, R	DAL, SHA, TEP
RWR89#2370%&	237	3	S, W, N, Z	B, D, F	S	P, R	DAL, SHA, TEP
RWR89#2400%&	240	3	S, W, N, Z	B, D	S	P, R	DAL, SHA, TEP
RWR89#2430%&	243	3	S, W, N, Z	B, D, F	S	P, R	DAL, SHA, TEP
RWR89#2460%&	246	3	S, W, N, Z	B, D	S	P, R	DAL, SHA, TEP
RWR89#2490%&	249	3	S, W, N, Z	B, D, F	S	P, R	DAL, SHA, TEP
RWR89#2520%&	252	3	S, W, N, Z	B, D	S	P, R	DAL, SHA, TEP
RWR89#2550%&	255	3	S, W, N, Z	B, D, F	S	P, R	DAL, SHA, TEP
RWR89#2580%&	258	3	S, W, N, Z	B, D	S	P, R	DAL, SHA, TEP
RWR89#2610%&	261	3	S, W, N, Z	B, D, F	S	P, R	DAL, SHA, TEP
RWR89#2640%&	264	3	S, W, N, Z	B, D	S	P, R	DAL, SHA, TEP
RWR89#2670%&	267	3	S, W, N, Z	B, D, F	S	P, R	DAL, SHA, TEP
RWR89#2710%&	271	3	S, W, N, Z	B, D	S	P, R	DAL, SHA, TEP
RWR89#2740%&	274	3	S, W, N, Z	B, D, F	S	P, R	DAL, SHA, TEP
RWR89#2770%&	277	3	S, W, N, Z	B, D	S	P, R	DAL, SHA, TEP
RWR89#2800%&	280	3	S, W, N, Z	B, D, F	S	P, R	DAL, SHA, TEP
RWR89#2840%&	284	3	S, W, N, Z	B, D	S	P, R	DAL, SHA, TEP
RWR89#2870%&	287	3	S, W, N, Z	B, D, F	S	P, R	DAL, SHA, TEP
RWR89#2910%&	291	3	S, W, N, Z	B, D	S	P, R	DAL, SHA, TEP
RWR89#2940%&	294	3	S, W, N, Z	B, D, F	S	P, R	DAL, SHA, TEP
RWR89#2980%&	298	3	S, W, N, Z	B, D	S	P, R	DAL, SHA, TEP
RWR89#3010%&	301	3	S, W, N, Z	B, D, F	S	P, R	DAL, SHA, TEP
RWR89#3050%&	305	3	S, W, N, Z	B, D	S	P, R	DAL, SHA, TEP
RWR89#3090%&	309	3	S, W, N, Z	B, D, F	S	P, R	DAL, SHA, TEP
RWR89#3120%&	312	3	S, W, N, Z	B, D	S	P, R	DAL, SHA, TEP
RWR89#3160%&	316	3	S, W, N, Z	B, D, F	S	P, R	DAL, SHA, TEP
RWR89#3200%&	320	3	S, W, N, Z	B, D	S	P, R	DAL, SHA, TEP
RWR89#3240%&	324	3	S, W, N, Z	B, D, F	S	P, R	DAL, SHA, TEP
RWR89#3280%&	328	3	S, W, N, Z	B, D	S	P, R	DAL, SHA, TEP
RWR89#3320%&	332	3	S, W, N, Z	B, D, F	S	P, R	DAL, SHA, TEP
RWR89#3360%&	336	3	S, W, N, Z	B, D	S	P, R	DAL, SHA, TEP
RWR89#3400%&	340	3	S, W, N, Z	B, D, F	S	P, R	DAL, SHA, TEP
RWR89#3440%&	344	3	S, W, N, Z	B, D	S	P, R	DAL, SHA, TEP
RWR89#3480%&	348	3	S, W, N, Z	B, D, F	S	P, R	DAL, SHA, TEP
RWR89#3520%&	352	3	S, W, N, Z	B, D	S	P, R	DAL, SHA, TEP
RWR89#3570%&	357	3	S, W, N, Z	B, D, F	S	P, R	DAL, SHA, TEP
RWR89#3610%&	361	3	S, W, N, Z	B, D	S	P, R	DAL, SHA, TEP
RWR89#3650%&	365	3	S, W, N, Z	B, D, F	S	P, R	DAL, SHA, TEP

RWR89#3700%&	370	3	S, W, N, Z	B, D	S	P, R	DAL, SHA, TEP
RWR89#3740%&	374	3	S, W, N, Z	B, D, F	S	P, R	DAL, SHA, TEP
RWR89#3790%&	379	3	S, W, N, Z	B, D	S	P, R	DAL, SHA, TEP
RWR89#3830%&	383	3	S, W, N, Z	B, D, F	S	P, R	DAL, SHA, TEP
RWR89#3880%&	388	3	S, W, N, Z	B, D	S	P, R	DAL, SHA, TEP
RWR89#3920%&	392	3	S, W, N, Z	B, D, F	S	P, R	DAL, SHA, TEP
RWR89#3970%&	397	3	S, W, N, Z	B, D	S	P, R	DAL, SHA, TEP
RWR89#4020%&	402	3	S, W, N, Z	B, D, F	S	P, R	DAL, SHA, TEP
RWR89#4070%&	407	3	S, W, N, Z	B, D	S	P, R	DAL, SHA, TEP
RWR89#4120%&	412	3	S, W, N, Z	B, D, F	S	P, R	DAL, SHA, TEP
RWR89#4170%&	417	3	S, W, N, Z	B, D	S	P, R	DAL, SHA, TEP
RWR89#4220%&	422	3	S, W, N, Z	B, D, F	S	P, R	DAL, SHA, TEP
RWR89#4270%&	427	3	S, W, N, Z	B, D	S	P, R	DAL, SHA, TEP
RWR89#4320%&	432	3	S, W, N, Z	B, D, F	S	P, R	DAL, SHA, TEP
RWR89#4370%&	437	3	S, W, N, Z	B, D	S	P, R	DAL, SHA, TEP
RWR89#4420%&	442	3	S, W, N, Z	B, D, F	S	P, R	DAL, SHA, TEP
RWR89#4480%&	448	3	S, W, N, Z	B, D	S	P, R	DAL, SHA, TEP
RWR89#4530%&	453	3	S, W, N, Z	B, D, F	S	P, R	DAL, SHA, TEP
RWR89#4590%&	459	3	S, W, N, Z	B, D	S	P, R	DAL, SHA, TEP
RWR89#4640%&	464	3	S, W, N, Z	B, D, F	S	P, R	DAL, SHA, TEP
RWR89#4700%&	470	3	S, W, N, Z	B, D	S	P, R	DAL, SHA, TEP
RWR89#4750%&	475	3	S, W, N, Z	B, D, F	S	P, R	DAL, SHA, TEP
RWR89#4810%&	481	3	S, W, N, Z	B, D	S	P, R	DAL, SHA, TEP
RWR89#4870%&	487	3	S, W, N, Z	B, D, F	S	P, R	DAL, SHA, TEP
RWR89#4930%&	493	3	S, W, N, Z	B, D	S	P, R	DAL, SHA, TEP
RWR89#4990%&	499	3	S, W, N, Z	B, D, F	S	P, R	DAL, SHA, TEP
RWR89#5050%&	505	3	S, W, N, Z	B, D	S	P, R	DAL, SHA, TEP
RWR89#5110%&	511	3	S, W, N, Z	B, D, F	S	P, R	DAL, SHA, TEP
RWR89#5170%&	517	3	S, W, N, Z	B, D	S	P, R	DAL, SHA, TEP
RWR89#5230%&	523	3	S, W, N, Z	B, D, F	S	P, R	DAL, SHA, TEP
RWR89#5300%&	530	3	S, W, N, Z	B, D	S	P, R	DAL, SHA, TEP
RWR89#5360%&	536	3	S, W, N, Z	B, D, F	S	P, R	DAL, SHA, TEP
RWR89#5420%&	542	3	S, W, N, Z	B, D	S	P, R	DAL, SHA, TEP
RWR89#5490%&	549	3	S, W, N, Z	B, D, F	S	P, R	DAL, SHA, TEP
RWR89#5560%&	556	3	S, W, N, Z	B, D	S	P, R	DAL, SHA, TEP
RWR89#5620%&	562	3	S, W, N, Z	B, D, F	S	P, R	DAL, SHA, TEP
RWR89#5690%&	569	3	S, W, N, Z	B, D	S	P, R	DAL, SHA, TEP
RWR89#5760%&	576	3	S, W, N, Z	B, D, F	S	P, R	DAL, SHA, TEP
RWR89#5830%&	583	3	S, W, N, Z	B, D	S	P, R	DAL, SHA, TEP
RWR89#5900%&	590	3	S, W, N, Z	B, D, F	S	P, R	DAL, SHA, TEP
RWR89#5970%&	597	3	S, W, N, Z	B, D	S	P, R	DAL, SHA, TEP
RWR89#6040%&	604	3	S, W, N, Z	B, D, F	S	P, R	DAL, SHA, TEP
RWR89#6120%&	612	3	S, W, N, Z	B, D	S	P, R	DAL, SHA, TEP
RWR89#6190%&	619	3	S, W, N, Z	B, D, F	S	P, R	DAL, SHA, TEP
RWR89#6260%&	626	3	S, W, N, Z	B, D	S	P, R	DAL, SHA, TEP
RWR89#6340%&	634	3	S, W, N, Z	B, D, F	S	P, R	DAL, SHA, TEP
RWR89#6420%&	642	3	S, W, N, Z	B, D	S	P, R	DAL, SHA, TEP

RWR89#6490%&	649	3	S, W, N, Z	B, D, F	S	P, R	DAL, SHA, TEP
RWR89#6570%&	657	3	S, W, N, Z	B, D	S	P, R	DAL, SHA, TEP
RWR89#6650%&	665	3	S, W, N, Z	B, D, F	S	P, R	DAL, SHA, TEP
RWR89#6730%&	673	3	S, W, N, Z	B, D	S	P, R	DAL, SHA, TEP
RWR89#6810%&	681	3	S, W, N, Z	B, D, F	S	P, R	DAL, SHA, TEP
RWR89#6900%&	690	3	S, W, N, Z	B, D	S	P, R	DAL, SHA, TEP
RWR89#6980%&	698	3	S, W, N, Z	B, D, F	S	P, R	DAL, SHA, TEP
RWR89#7060%&	706	3	S, W, N, Z	B, D	S	P, R	DAL, SHA, TEP
RWR89#7150%&	715	3	S, W, N, Z	B, D, F	S	P, R	DAL, SHA, TEP
RWR89#7230%&	723	3	S, W, N, Z	B, D	S	P, R	DAL, SHA, TEP
RWR89#7320%&	732	3	S, W, N, Z	B, D, F	S	P, R	DAL, SHA, TEP
RWR89#7410%&	741	3	S, W, N, Z	B, D	S	P, R	DAL, SHA, TEP
RWR89#7500%&	750	3	S, W, N, Z	B, D, F	S	P, R	DAL, SHA, TEP
RWR89#7590%&	759	3	S, W, N, Z	B, D	S	P, R	DAL, SHA, TEP
RWR89#7680%&	768	3	S, W, N, Z	B, D, F	S	P, R	DAL, SHA, TEP
RWR89#7770%&	777	3	S, W, N, Z	B, D	S	P, R	DAL, SHA, TEP
RWR89#7870%&	787	3	S, W, N, Z	B, D, F	S	P, R	DAL, SHA, TEP
RWR89#7960%&	796	3	S, W, N, Z	B, D	S	P, R	DAL, SHA, TEP
RWR89#8060%&	806	3	S, W, N, Z	B, D, F	S	P, R	DAL, SHA, TEP
RWR89#8160%&	816	3	S, W, N, Z	B, D	S	P, R	DAL, SHA, TEP
RWR89#8250%&	825	3	S, W, N, Z	B, D, F	S	P, R	DAL, SHA, TEP
RWR89#8350%&	835	3	S, W, N, Z	B, D	S	P, R	DAL, SHA, TEP
RWR89#8450%&	845	3	S, W, N, Z	B, D, F	S	P, R	DAL, SHA, TEP
RWR89#8560%&	856	3	S, W, N, Z	B, D	S	P, R	DAL, SHA, TEP
RWR89#8660%&	866	3	S, W, N, Z	B, D, F	S	P, R	DAL, SHA, TEP
RWR89#8760%&	876	3	S, W, N, Z	B, D	S	P, R	DAL, SHA, TEP
RWR89#8870%&	887	3	S, W, N, Z	B, D, F	S	P, R	DAL, SHA, TEP
RWR89#8980%&	898	3	S, W, N, Z	B, D	S	P, R	DAL, SHA, TEP
RWR89#9090%&	909	3	S, W, N, Z	B, D, F	S	P, R	DAL, SHA, TEP
RWR89#9200%&	920	3	S, W, N, Z	B, D	S	P, R	DAL, SHA, TEP
RWR89#9310%&	931	3	S, W, N, Z	B, D, F	S	P, R	DAL, SHA, TEP
RWR89#9420%&	942	3	S, W, N, Z	B, D	S	P, R	DAL, SHA, TEP
RWR89#9530%&	953	3	S, W, N, Z	B, D, F	S	P, R	DAL, SHA, TEP
RWR89#9650%&	965	3	S, W, N, Z	B, D	S	P, R	DAL, SHA, TEP
RWR89#9760%&	976	3	S, W, N, Z	B, D, F	S	P, R	DAL, SHA, TEP
RWR89#9880%&	988	3	S, W, N, Z	B, D	S	P, R	DAL, SHA, TEP
RWR89#1001%&	1000	3	S, W, N, Z	B, D, F	S	P, R	DAL, SHA, TEP
RWR89#1011%&	1010	3	S, W, N, Z	B, D	S	P, R	DAL, SHA, TEP
RWR89#1021%&	1020	3	S, W, N, Z	B, D, F	S	P, R	DAL, SHA, TEP
RWR89#1041%&	1040	3	S, W, N, Z	B, D	S	P, R	DAL, SHA, TEP
RWR89#1051%&	1050	3	S, W, N, Z	B, D, F	S	P, R	DAL, SHA, TEP
RWR89#1061%&	1060	3	S, W, N, Z	B, D	S	P, R	DAL, SHA, TEP
RWR89#1071%&	1070	3	S, W, N, Z	B, D, F	S	P, R	DAL, SHA, TEP
RWR89#1091%&	1090	3	S, W, N, Z	B, D	S	P, R	DAL, SHA, TEP
RWR89#1101%&	1100	3	S, W, N, Z	B, D, F	S	P, R	DAL, SHA, TEP
RWR89#1111%&	1110	3	S, W, N, Z	B, D	S	P, R	DAL, SHA, TEP
RWR89#1131%&	1130	3	S, W, N, Z	B, D, F	S	P, R	DAL, SHA, TEP

RWR89#1141%&	1140	3	S, W, N, Z	B, D	S	P, R	DAL, SHA, TEP
RWR89#1151%&	1150	3	S, W, N, Z	B, D, F	S	P, R	DAL, SHA, TEP
RWR89#1171%&	1170	3	S, W, N, Z	B, D	S	P, R	DAL, SHA, TEP
RWR89#1181%&	1180	3	S, W, N, Z	B, D, F	S	P, R	DAL, SHA, TEP
RWR89#1201%&	1200	3	S, W, N, Z	B, D	S	P, R	DAL, SHA, TEP
RWR89#1211%&	1210	3	S, W, N, Z	B, D, F	S	P, R	DAL, SHA, TEP
RWR89#1231%&	1230	3	S, W, N, Z	B, D	S	P, R	DAL, SHA, TEP
RWR89#1241%&	1240	3	S, W, N, Z	B, D, F	S	P, R	DAL, SHA, TEP
RWR89#1261%&	1260	3	S, W, N, Z	B, D	S	P, R	DAL, SHA, TEP
RWR89#1271%&	1270	3	S, W, N, Z	B, D, F	S	P, R	DAL, SHA, TEP
RWR89#1291%&	1290	3	S, W, N, Z	B, D	S	P, R	DAL, SHA, TEP
RWR89#1301%&	1300	3	S, W, N, Z	B, D, F	S	P, R	DAL, SHA, TEP
RWR89#1321%&	1320	3	S, W, N, Z	B, D	S	P, R	DAL, SHA, TEP
RWR89#1331%&	1330	3	S, W, N, Z	B, D, F	S	P, R	DAL, SHA, TEP
RWR89#1351%&	1350	3	S, W, N, Z	B, D	S	P, R	DAL, SHA, TEP
RWR89#1371%&	1370	3	S, W, N, Z	B, D, F	S	P, R	DAL, SHA, TEP
RWR89#1381%&	1380	3	S, W, N, Z	B, D	S	P, R	DAL, SHA, TEP
RWR89#1401%&	1400	3	S, W, N, Z	B, D, F	S	P, R	DAL, SHA, TEP
RWR89#1421%&	1420	3	S, W, N, Z	B, D	S	P, R	DAL, SHA, TEP
RWR89#1431%&	1430	3	S, W, N, Z	B, D, F	S	P, R	DAL, SHA, TEP
RWR89#1451%&	1450	3	S, W, N, Z	B, D	S	P, R	DAL, SHA, TEP
RWR89#1471%&	1470	3	S, W, N, Z	B, D, F	S	P, R	DAL, SHA, TEP
RWR89#1491%&	1490	3	S, W, N, Z	B, D	S	P, R	DAL, SHA, TEP
RWR89#1501%&	1500	3	S, W, N, Z	B, D, F	S	P, R	DAL, SHA, TEP
RWR89#1521%&	1520	3	S, W, N, Z	B, D	S	P, R	DAL, SHA, TEP
RWR89#1541%&	1540	3	S, W, N, Z	B, D, F	S	P, R	DAL, SHA, TEP
RWR89#1561%&	1560	3	S, W, N, Z	B, D	S	P, R	DAL, SHA, TEP
RWR89#1581%&	1580	3	S, W, N, Z	B, D, F	S	P, R	DAL, SHA, TEP
RWR89#1601%&	1600	3	S, W, N, Z	B, D	S	P, R	DAL, SHA, TEP
RWR89#1621%&	1620	3	S, W, N, Z	B, D, F	S	P, R	DAL, SHA, TEP
RWR89#1641%&	1640	3	S, W, N, Z	B, D	S	P, R	DAL, SHA, TEP
RWR89#1651%&	1650	3	S, W, N, Z	B, D, F	S	P, R	DAL, SHA, TEP
RWR89#1671%&	1670	3	S, W, N, Z	B, D	S	P, R	DAL, SHA, TEP
RWR89#1691%&	1690	3	S, W, N, Z	B, D, F	S	P, R	DAL, SHA, TEP
RWR89#1721%&	1720	3	S, W, N, Z	B, D	S	P, R	DAL, SHA, TEP
RWR89#1741%&	1740	3	S, W, N, Z	B, D, F	S	P, R	DAL, SHA, TEP
RWR89#1761%&	1760	3	S, W, N, Z	B, D	S	P, R	DAL, SHA, TEP
RWR89#1781%&	1780	3	S, W, N, Z	B, D, F	S	P, R	DAL, SHA, TEP
RWR89#1801%&	1800	3	S, W	B, D, F	S	P, R	DAL, SHA, TEP
RWR89#1821%&	1820	3	S, W	B, D, F	S	P, R	DAL, SHA, TEP
RWR89#1841%&	1840	3	S, W	B, D	S	P, R	DAL, SHA, TEP
RWR89#1871%&	1870	3	S, W	B, D, F	S	P, R	DAL, SHA, TEP
RWR89#1891%&	1890	3	S, W	B, D	S	P, R	DAL, SHA, TEP
RWR89#1911%&	1910	3	S, W	B, D, F	S	P, R	DAL, SHA, TEP
RWR89#1931%&	1930	3	S, W	B, D	S	P, R	DAL, SHA, TEP
RWR89#1961%&	1960	3	S, W	B, D, F	S	P, R	DAL, SHA, TEP
RWR89#1981%&	1980	3	S, W	B, D	S	P, R	DAL, SHA, TEP

RWR89#2001%&	2000	3	S, W	B, D, F	S	P, R	DAL, SHA, TEP
RWR89#2031%&	2030	3	S, W	B, D	S	P, R	DAL, SHA, TEP
RWR89#2051%&	2050	3	S, W	B, D, F	S	P, R	DAL, SHA, TEP
RWR89#2081%&	2080	3	S, W	B, D	S	P, R	DAL, SHA, TEP
RWR89#2101%&	2100	3	S, W	B, D, F	S	P, R	DAL, SHA, TEP
RWR89#2131%&	2130	3	S, W	B, D	S	P, R	DAL, SHA, TEP
RWR89#2151%&	2150	3	S, W	B, D, F	S	P, R	DAL, SHA, TEP
RWR89#2181%&	2180	3	S, W	B, D	S	P, R	DAL, SHA, TEP
RWR89#2211%&	2210	3	S, W	B, D, F	S	P, R	DAL, SHA, TEP
RWR89#2231%&	2230	3	S, W	B, D	S	P, R	DAL, SHA, TEP
RWR89#2261%&	2260	3	S, W	B, D, F	S	P, R	DAL, SHA, TEP
RWR89#2291%&	2290	3	S, W	B, D	S	P, R	DAL, SHA, TEP
RWR89#2321%&	2320	3	S, W	B, D, F	S	P, R	DAL, SHA, TEP
RWR89#2341%&	2340	3	S, W	B, D	S	P, R	DAL, SHA, TEP
RWR89#2371%&	2370	3	S, W	B, D, F	S	P, R	DAL, SHA, TEP
RWR89#2401%&	2400	3	S, W	B, D	S	P, R	DAL, SHA, TEP
RWR89#2431%&	2430	3	S, W	B, D, F	S	P, R	DAL, SHA, TEP
RWR89#2461%&	2460	3	S, W	B, D	S	P, R	DAL, SHA, TEP
RWR89#2491%&	2490	3	S, W	B, D, F	S	P, R	DAL, SHA, TEP
RWR89#2521%&	2520	3	S, W	B, D	S	P, R	DAL, SHA, TEP
RWR89#2551%&	2550	3	S, W	B, D, F	S	P, R	DAL, SHA, TEP
RWR89#2581%&	2580	3	S, W	B, D	S	P, R	DAL, SHA, TEP
RWR89#2611%&	2610	3	S, W	B, D, F	S	P, R	DAL, SHA, TEP
RWR89#2641%&	2640	3	S, W	B, D	S	P, R	DAL, SHA, TEP
RWR89#2671%&	2670	3	S, W	B, D, F	S	P, R	DAL, SHA, TEP
RWR89#2711%&	2710	3	S, W	B, D	S	P, R	DAL, SHA, TEP
RWR89#2741%&	2740	3	S, W	B, D, F	S	P, R	DAL, SHA, TEP
RWR89#2771%&	2770	3	S, W	B, D	S	P, R	DAL, SHA, TEP
RWR89#2801%&	2800	3	S, W	B, D, F	S	P, R	DAL, SHA, TEP
RWR89#2841%&	2840	3	S, W	B, D	S	P, R	DAL, SHA, TEP
RWR89#2871%&	2870	3	S, W	B, D, F	S	P, R	DAL, SHA, TEP
RWR89#2911%&	2910	3	S, W	B, D	S	P, R	DAL, SHA, TEP
RWR89#2941%&	2940	3	S, W	B, D, F	S	P, R	DAL, SHA, TEP
RWR89#2981%&	2980	3	S, W	B, D	S	P, R	DAL, SHA, TEP
RWR89#3011%&	3010	3	S, W	B, D, F	S	P, R	DAL, SHA, TEP
RWR89#3051%&	3050	3	S, W	B, D	S	P, R	DAL, SHA, TEP
RWR89#3091%&	3090	3	S, W	B, D, F	S	P, R	DAL, SHA, TEP
RWR89#3121%&	3120	3	S, W	B, D	S	P, R	DAL, SHA, TEP
RWR89#3161%&	3160	3	S, W	B, D, F	S	P, R	DAL, SHA, TEP
RWR89#3201%&	3200	3	S, W	B, D	S	P, R	DAL, SHA, TEP
RWR89#3241%&	3240	3	S, W	B, D, F	S	P, R	DAL, SHA, TEP
RWR89#3281%&	3280	3	S, W	B, D	S	P, R	DAL, SHA, TEP
RWR89#3321%&	3320	3	S, W	B, D, F	S	P, R	DAL, SHA, TEP
RWR89#3361%&	3360	3	S, W	B, D	S	P, R	DAL, SHA, TEP
RWR89#3401%&	3400	3	S, W	B, D, F	S	P, R	DAL, SHA, TEP
RWR89#3441%&	3440	3	S, W	B, D	S	P, R	DAL, SHA, TEP
RWR89#3481%&	3480	3	S, W	B, D, F	S	P, R	DAL, SHA, TEP

RWR89#3521%&	3520	3	S, W	B, D	S	P, R	DAL, SHA, TEP
RWR89#3571%&	3570	3	S, W	B, D, F	S	P, R	DAL, SHA, TEP

RWR89 RESISTORS DECADE BREAKDOWN

Click on the link below to see the associated parts selection listing:

Resistance Range
0.1 Ohms through 0.988 Ohms
1.00 Ohms through 9.88 Ohms
10.0 Ohms through 98.8 Ohms
100 Ohms through 988 Ohms
1000 Ohms through 3570 Ohms

RWR89 Wirewound Resistors: 0.100 Ohms through 0.988 Ohms

	Resistance	Power	Terminal	Resistance	Level 1	Level 2	
Part Number	Value (Ohms)	Rating (W)	Characteristic (#)	Tolerance (%)	(FRL)(&)	(FRL)(&)	Manufacturer
RWR89#R100%&	0.100	3	S, W, N, Z	B, D, F	S	P, R	DAL, SHA, TEP
RWR89#R101%&	0.101	3	S, W, N, Z	B, D	S	P, R	DAL, SHA, TEP
RWR89#R102%&	0.102	3	S, W, N, Z	B, D, F	S	P, R	DAL, SHA, TEP
RWR89#R104%&	0.104	3	S, W, N, Z	B, D	S	P, R	DAL, SHA, TEP
RWR89#R105%&	0.105	3	S, W, N, Z	B, D, F	S	P, R	DAL, SHA, TEP
RWR89#R106%&	0.106	3	S, W, N, Z	B, D	S	P, R	DAL, SHA, TEP
RWR89#R107%&	0.107	3	S, W, N, Z	B, D, F	S	P, R	DAL, SHA, TEP
RWR89#R109%&	0.109	3	S, W, N, Z	B, D	S	P, R	DAL, SHA, TEP
RWR89#R110%&	0.110	3	S, W, N, Z	B, D, F	S	P, R	DAL, SHA, TEP
RWR89#R111%&	0.111	3	S, W, N, Z	B, D	S	P, R	DAL, SHA, TEP
RWR89#R113%&	0.113	3	S, W, N, Z	B, D, F	S	P, R	DAL, SHA, TEP
RWR89#R114%&	0.114	3	S, W, N, Z	B, D	S	P, R	DAL, SHA, TEP
RWR89#R115%&	0.115	3	S, W, N, Z	B, D, F	S	P, R	DAL, SHA, TEP
RWR89#R117%&	0.117	3	S, W, N, Z	B, D	S	P, R	DAL, SHA, TEP
	Resistance	Power	Terminal	Resistance	Level 1	Level 2	
Part Number	Value (Ohms)	Rating (W)	Characteristic (#)	Tolerance (%)	(FRL)(&)	(FRL)(&)	Manufacturer
RWR89#R118%&	0.118	3	S, W, N, Z	B, D, F	S	P, R	DAL, SHA, TEP
RWR89#R120%&	0.120	3	S, W, N, Z	B, D	S	P, R	DAL, SHA, TEP
RWR89#R121%&	0.121	3	S, W, N, Z	B, D, F	S	P, R	DAL, SHA, TEP
RWR89#R123%&	0.123	3	S, W, N, Z	B, D	S	P, R	DAL, SHA, TEP
RWR89#R124%&	0.124	3	S, W, N, Z	B, D, F	S	P, R	DAL, SHA, TEP
RWR89#R126%&	0.126	3	S, W, N, Z	B, D	S	P, R	DAL, SHA, TEP
RWR89#R127%&	0.127	3	S, W, N, Z	B, D, F	S	P, R	DAL, SHA, TEP
RWR89#R129%&	0.129	3	S, W, N, Z	B, D	S	P, R	DAL, SHA, TEP
RWR89#R130%&	0.130	3	S, W, N, Z	B, D, F	S	P, R	DAL, SHA, TEP
RWR89#R132%&	0.132	3	S, W, N, Z	B, D	S	P, R	DAL, SHA, TEP
RWR89#R133%&	0.133	3	S, W, N, Z	B, D, F	S	P, R	DAL, SHA, TEP

RWR89#R135%&	0.135	3	S, W, N, Z	B, D	S	P, R	DAL, SHA, TEP
RWR89#R137%&	0.137	3	S, W, N, Z	B, D, F	S	P, R	DAL, SHA, TEP
RWR89#R138%&	0.138	3	S, W, N, Z	B, D	S	P, R	DAL, SHA, TEP
	Resistance	Power	Terminal	Resistance	Level 1	Level 2	
Part Number	Value (Ohms)	Rating (W)	Characteristic (#)	Tolerance (%)	(FRL)(&)	(FRL)(&)	Manufacturer
RWR89#R140%&	0.140	3	S, W, N, Z	B, D, F	S	P, R	DAL, SHA, TEP
RWR89#R142%&	0.142	3	S, W, N, Z	B, D	S	P, R	DAL, SHA, TEP
RWR89#R143%&	0.143	3	S, W, N, Z	B, D, F	S	P, R	DAL, SHA, TEP
RWR89#R145%&	0.145	3	S, W, N, Z	B, D	S	P, R	DAL, SHA, TEP
RWR89#R147%&	0.147	3	S, W, N, Z	B, D, F	S	P, R	DAL, SHA, TEP
RWR89#R149%&	0.149	3	S, W, N, Z	B, D	S	P, R	DAL, SHA, TEP
RWR89#R150%&	0.150	3	S, W, N, Z	B, D, F	S	P, R	DAL, SHA, TEP
RWR89#R152%&	0.152	3	S, W, N, Z	B, D	S	P, R	DAL, SHA, TEP
RWR89#R154%&	0.154	3	S, W, N, Z	B, D, F	S	P, R	DAL, SHA, TEP
RWR89#R156%&	0.156	3	S, W, N, Z	B, D	S	P, R	DAL, SHA, TEP
RWR89#R158%&	0.158	3	S, W, N, Z	B, D, F	S	P, R	DAL, SHA, TEP
RWR89#R160%&	0.160	3	S, W, N, Z	B, D	S	P, R	DAL, SHA, TEP
RWR89#R162%&	0.162	3	S, W, N, Z	B, D, F	S	P, R	DAL, SHA, TEP
RWR89#R164%&	0.164	3	S, W, N, Z	B, D	S	P, R	DAL, SHA, TEP
	Resistance	Power	Terminal	Resistance	Level 1	Level 2	
Part Number	Value (Ohms)	Rating (W)	Characteristic (#)	Tolerance (%)	(FRL)(&)	(FRL)(&)	Manufacturer
RWR89#R165%&	0.165	3	S, W, N, Z	B, D, F	S	P, R	DAL, SHA, TEP
RWR89#R167%&	0.167	3	S, W, N, Z	B, D	S	P, R	DAL, SHA, TEP
RWR89#R169%&	0.169	3	S, W, N, Z	B, D, F	S	P, R	DAL, SHA, TEP
RWR89#R172%&	0.172	3	S, W, N, Z	B, D	S	P, R	DAL, SHA, TEP
RWR89#R174%&	0.174	3	S, W, N, Z	B, D, F	S	P, R	DAL, SHA, TEP
RWR89#R176%&	0.176	3	S, W, N, Z	B, D	S	P, R	DAL, SHA, TEP
RWR89#R178%&	0.178	3	S, W, N, Z	B, D, F	S	P, R	DAL, SHA, TEP
RWR89#R180%&	0.180	3	S, W, N, Z	B, D, F	S	P, R	DAL, SHA, TEP
RWR89#R182%&	0.182	3	S, W, N, Z	B, D, F	S	P, R	DAL, SHA, TEP
RWR89#R184%&	0.184	3	S, W, N, Z	B, D	S	P, R	DAL, SHA, TEP
RWR89#R187%&	0.187	3	S, W, N, Z	B, D, F	S	P, R	DAL, SHA, TEP
RWR89#R189#&	0.189	3	S, W, N, Z	B, D	S	P, R	DAL, SHA, TEP
	Resistance	Power	Terminal	Resistance	Level 1	Level 2	
Part Number	Value (Ohms)	Rating (W)	Characteristic (#)	Tolerance (%)	(FRL)(&)	(FRL)(&)	Manufacturer
RWR89#R191%&	0.191	3	S, W, N, Z	B, D, F	S	P, R	DAL, SHA, TEP
RWR89#R193%&	0.193	3	S, W, N, Z	B, D	S	P, R	DAL, SHA, TEP
RWR89#R196%&	0.196	3	S, W, N, Z	B, D, F	S	P, R	DAL, SHA, TEP
RWR89#R198%&	0.198	3	S, W, N, Z	B, D	S	P, R	DAL, SHA, TEP
RWR89#R200%&	0.200	3	S, W, N, Z	B, D, F	S	P, R	DAL, SHA, TEP
RWR89#R203%&	0.203	3	S, W, N, Z	B, D	S	P, R	DAL, SHA, TEP
RWR89#R205%&	0.205	3	S, W, N, Z	B, D, F	S	P, R	DAL, SHA, TEP
RWR89#R208%&	0.208	3	S, W, N, Z	B, D	S	P, R	DAL, SHA, TEP
RWR89#R210%&	0.210	3	S, W, N, Z	B, D, F	S	P, R	DAL, SHA, TEP
RWR89#R213%&	0.213	3	S, W, N, Z	B, D	S	P, R	DAL, SHA, TEP
RWR89#R215%&	0.215	3	S, W, N, Z	B, D, F	S	P, R	DAL, SHA, TEP
RWR89#R218%&	0.218	3	S, W, N, Z	B, D	S	P, R	DAL, SHA, TEP

RWR89#R221%&	0.221	3	S, W, N, Z	B, D, F	S	P, R	DAL, SHA, TEP
RWR89#R223%&	0.223	3	S, W, N, Z	B, D	S	P, R	DAL, SHA, TEP
	Resistance	Power	Terminal	Resistance	Level 1	Level 2	
Part Number	Value (Ohms)	Rating (W)	Characteristic (#)	Tolerance (%)	(FRL)(&)	(FRL)(&)	Manufacturer
RWR89#R226%&	0.226	3	S, W, N, Z	B, D, F	S	P, R	DAL, SHA, TEP
RWR89#R229%&	0.229	3	S, W, N, Z	B, D	S	P, R	DAL, SHA, TEP
RWR89#R232%&	0.232	3	S, W, N, Z	B, D, F	S	P, R	DAL, SHA, TEP
RWR89#R234%&	0.234	3	S, W, N, Z	B, D	S	P, R	DAL, SHA, TEP
RWR89#R237%&	0.237	3	S, W, N, Z	B, D, F	S	P, R	DAL, SHA, TEP
RWR89#R240%&	0.240	3	S, W, N, Z	B, D	S	P, R	DAL, SHA, TEP
RWR89#R243%&	0.243	3	S, W, N, Z	B, D, F	S	P, R	DAL, SHA, TEP
RWR89#R246%&	0.246	3	S, W, N, Z	B, D	S	P, R	DAL, SHA, TEP
RWR89#R249%&	0.249	3	S, W, N, Z	B, D, F	S	P, R	DAL, SHA, TEP
RWR89#R252%&	0.252	3	S, W, N, Z	B, D	S	P, R	DAL, SHA, TEP
RWR89#R255%&	0.255	3	S, W, N, Z	B, D, F	S	P, R	DAL, SHA, TEP
RWR89#R258%&	0.258	3	S, W, N, Z	B, D	S	P, R	DAL, SHA, TEP
RWR89#R261%&	0.261	3	S, W, N, Z	B, D, F	S	P, R	DAL, SHA, TEP
RWR89#R264%&	0.264	3	S, W, N, Z	B, D	S	P, R	DAL, SHA, TEP
	Resistance	Power	Terminal	Resistance	Level 1	Level 2	
Part Number	Value (Ohms)	Rating (W)	Characteristic (#)	Tolerance (%)	(FRL)(&)	(FRL)(&)	Manufacturer
RWR89#R267%&	0.267	3	S, W, N, Z	B, D, F	S	P, R	DAL, SHA, TEP
RWR89#R271%&	0.271	3	S, W, N, Z	B, D	S	P, R	DAL, SHA, TEP
RWR89#R274%&	0.274	3	S, W, N, Z	B, D, F	S	P, R	DAL, SHA, TEP
RWR89#R277%&	0.277	3	S, W, N, Z	B, D	S	P, R	DAL, SHA, TEP
RWR89#R280%&	0.280	3	S, W, N, Z	B, D, F	S	P, R	DAL, SHA, TEP
RWR89#R284%&	0.284	3	S, W, N, Z	B, D	S	P, R	DAL, SHA, TEP
RWR89#R287%&	0.287	3	S, W, N, Z	B, D, F	S	P, R	DAL, SHA, TEP
RWR89#R291%&	0.291	3	S, W, N, Z	B, D	S	P, R	DAL, SHA, TEP
RWR89#R294%&	0.294	3	S, W, N, Z	B, D, F	S	P, R	DAL, SHA, TEP
RWR89#R298%&	0.298	3	S, W, N, Z	B, D	S	P, R	DAL, SHA, TEP
RWR89#R301%&	0.301	3	S, W, N, Z	B, D, F	S	P, R	DAL, SHA, TEP
RWR89#R305%&	0.305	3	S, W, N, Z	B, D	S	P, R	DAL, SHA, TEP
RWR89#R309%&	0.309	3	S, W, N, Z	B, D, F	S	P, R	DAL, SHA, TEP
RWR89#R312%&	0.312	3	S, W, N, Z	B, D	S	P, R	DAL, SHA, TEP
	Resistance	Power	Terminal	Resistance	Level 1	Level 2	
Part Number	Value (Ohms)	Rating (W)	Characteristic (#)	Tolerance (%)	(FRL)(&)	(FRL)(&)	Manufacturer
RWR89#R316%&	0.316	3	S, W, N, Z	B, D, F	S	P, R	DAL, SHA, TEP
RWR89#R320%&	0.320	3	S, W, N, Z	B, D	S	P, R	DAL, SHA, TEP
RWR89#R324%&	0.324	3	S, W, N, Z	B, D, F	S	P, R	DAL, SHA, TEP
RWR89#R328%&	0.328	3	S, W, N, Z	B, D	S	P, R	DAL, SHA, TEP
RWR89#R332%&	0.332	3	S, W, N, Z	B, D, F	S	P, R	DAL, SHA, TEP
RWR89#R336%&	0.336	3	S, W, N, Z	B, D	S	P, R	DAL, SHA, TEP
RWR89#R340%&	0.340	3	S, W, N, Z	B, D, F	S	P, R	DAL, SHA, TEP
RWR89#R344%&	0.344	3	S, W, N, Z	B, D	S	P, R	DAL, SHA, TEP
RWR89#R348%&	0.348	3	S, W, N, Z	B, D, F	S	P, R	DAL, SHA, TEP
RWR89#R352%&	0.352	3	S, W, N, Z	B, D	S	P, R	DAL, SHA, TEP
RWR89#R357%&	0.357	3	S, W, N, Z	B, D, F	S	P, R	DAL, SHA, TEP

RWR89#R361%&	0.361	3	S, W, N, Z	B, D	S	P, R	DAL, SHA, TEP
RWR89#R365%&	0.365	3	S, W, N, Z	B, D, F	S	P, R	DAL, SHA, TEP
RWR89#R370%&	0.370	3	S, W, N, Z	B, D	S	P, R	DAL, SHA, TEP
	Resistance	Power	Terminal	Resistance	Level 1	Level 2	
Part Number	Value (Ohms)	Rating (W)	Characteristic (#)	Tolerance (%)	(FRL)(&)	(FRL)(&)	Manufacturer
RWR89#R374%&	0.374	3	S, W, N, Z	B, D, F	S	P, R	DAL, SHA, TEP
RWR89#R379%&	0.379	3	S, W, N, Z	B, D	S	P, R	DAL, SHA, TEP
RWR89#R383%&	0.383	3	S, W, N, Z	B, D, F	S	P, R	DAL, SHA, TEP
RWR89#R388%&	0.388	3	S, W, N, Z	B, D	S	P, R	DAL, SHA, TEP
RWR89#R392%&	0.392	3	S, W, N, Z	B, D, F	S	P, R	DAL, SHA, TEP
RWR89#R397%&	0.397	3	S, W, N, Z	B, D	S	P, R	DAL, SHA, TEP
RWR89#R402%&	0.402	3	S, W, N, Z	B, D, F	S	P, R	DAL, SHA, TEP
RWR89#R407%&	0.407	3	S, W, N, Z	B, D	S	P, R	DAL, SHA, TEP
RWR89#R412%&	0.412	3	S, W, N, Z	B, D, F	S	P, R	DAL, SHA, TEP
RWR89#R417%&	0.417	3	S, W, N, Z	B, D	S	P, R	DAL, SHA, TEP
RWR89#R422%&	0.422	3	S, W, N, Z	B, D, F	S	P, R	DAL, SHA, TEP
RWR89#R427%&	0.427	3	S, W, N, Z	B, D	S	P, R	DAL, SHA, TEP
RWR89#R432%&	0.432	3	S, W, N, Z	B, D, F	S	P, R	DAL, SHA, TEP
RWR89#R437%&	0.437	3	S, W, N, Z	B, D	S	P, R	DAL, SHA, TEP
	Resistance	Power	Terminal	Resistance	Level 1	Level 2	
Part Number	Value (Ohms)	Rating (W)	Characteristic (#)	Tolerance (%)	(FRL)(&)	(FRL)(&)	Manufacturer
RWR89#R442%&	0.442	3	S, W, N, Z	B, D, F	S	P, R	DAL, SHA, TEP
RWR89#R448%&	0.448	3	S, W, N, Z	B, D	S	P, R	DAL, SHA, TEP
RWR89#R453%&	0.453	3	S, W, N, Z	B, D, F	S	P, R	DAL, SHA, TEP
RWR89#R459%&	0.459	3	S, W, N, Z	B, D	S	P, R	DAL, SHA, TEP
RWR89#R464%&	0.464	3	S, W, N, Z	B, D, F	S	P, R	DAL, SHA, TEP
RWR89#R470%&	0.470	3	S, W, N, Z	B, D	S	P, R	DAL, SHA, TEP
RWR89#R475%&	0.475	3	S, W, N, Z	B, D, F	S	P, R	DAL, SHA, TEP
RWR89#R481%&	0.481	3	S, W, N, Z	B, D	S	P, R	DAL, SHA, TEP
RWR89#R487%&	0.487	3	S, W, N, Z	B, D, F	S	P, R	DAL, SHA, TEP
RWR89#R493%&	0.493	3	S, W, N, Z	B, D	S	P, R	DAL, SHA, TEP
RWR89#R499%&	0.499	3	S, W, N, Z	B, D, F	S	P, R	DAL, SHA, TEP
RWR89#R505%&	0.505	3	S, W, N, Z	B, D	S	P, R	DAL, SHA, TEP
	Resistance	Power	Terminal	Resistance	Level 1	Level 2	
Part Number	Value (Ohms)	Rating (W)	Characteristic (#)	Tolerance (%)	(FRL)(&)	(FRL)(&)	Manufacturer
RWR89#R511%&	0.511	3	S, W, N, Z	B, D, F	S	P, R	DAL, SHA, TEP
RWR89#R517%&	0.517	3	S, W, N, Z	B, D	S	P, R	DAL, SHA, TEP
RWR89#R523%&	0.523	3	S, W, N, Z	B, D, F	S	P, R	DAL, SHA, TEP
RWR89#R530%&	0.530	3	S, W, N, Z	B, D	S	P, R	DAL, SHA, TEP
RWR89#R536%&	0.536	3	S, W, N, Z	B, D, F	S	P, R	DAL, SHA, TEP
RWR89#R542%&	0.542	3	S, W, N, Z	B, D	S	P, R	DAL, SHA, TEP
RWR89#R549%&	0.549	3	S, W, N, Z	B, D, F	S	P, R	DAL, SHA, TEP
RWR89#R556%&	0.556	3	S, W, N, Z	B, D	S	P, R	DAL, SHA, TEP
RWR89#R562%&	0.562	3	S, W, N, Z	B, D, F	S	P, R	DAL, SHA, TEP
RWR89#R569%&	0.569	3	S, W, N, Z	B, D	S	P, R	DAL, SHA, TEP
RWR89#R576%&	0.576	3	S, W, N, Z	B, D, F	S	P, R	DAL, SHA, TEP
RWR89#R583%&	0.583	3	S, W, N, Z	B, D	S	P, R	DAL, SHA, TEP

RWR89#R590%&	0.590	3	S, W, N, Z	B, D, F	S	P, R	DAL, SHA, TEP
RWR89#R597%&	0.597	3	S, W, N, Z	B, D	S	P, R	DAL, SHA, TEP
	Resistance	Power	Terminal	Resistance	Level 1	Level 2	
Part Number	Value (Ohms)	Rating (W)	Characteristic (#)	Tolerance (%)	(FRL)(&)	(FRL)(&)	Manufacturer
RWR89#R604%&	0.604	3	S, W, N, Z	B, D, F	S	P, R	DAL, SHA, TEP
RWR89#R612%&	0.612	3	S, W, N, Z	B, D	S	P, R	DAL, SHA, TEP
RWR89#R619%&	0.619	3	S, W, N, Z	B, D, F	S	P, R	DAL, SHA, TEP
RWR89#R626%&	0.626	3	S, W, N, Z	B, D	S	P, R	DAL, SHA, TEP
RWR89#R634%&	0.634	3	S, W, N, Z	B, D, F	S	P, R	DAL, SHA, TEP
RWR89#R642%&	0.642	3	S, W, N, Z	B, D	S	P, R	DAL, SHA, TEP
RWR89#R649%&	0.649	3	S, W, N, Z	B, D, F	S	P, R	DAL, SHA, TEP
RWR89#R657%&	0.657	3	S, W, N, Z	B, D	S	P, R	DAL, SHA, TEP
RWR89#R665%&	0.665	3	S, W, N, Z	B, D, F	S	P, R	DAL, SHA, TEP
RWR89#R673%&	0.673	3	S, W, N, Z	B, D	S	P, R	DAL, SHA, TEP
RWR89#R681%&	0.681	3	S, W, N, Z	B, D, F	S	P, R	DAL, SHA, TEP
RWR89#R690%&	0.690	3	S, W, N, Z	B, D	S	P, R	DAL, SHA, TEP
RWR89#R698%&	0.698	3	S, W, N, Z	B, D, F	S	P, R	DAL, SHA, TEP
RWR89#R706%&	0.706	3	S, W, N, Z	B, D	S	P, R	DAL, SHA, TEP
	Resistance	Power	Terminal	Resistance	Level 1	Level 2	
Part Number	Value (Ohms)	Rating (W)	Characteristic (#)	Tolerance (%)	(FRL)(&)	(FRL)(&)	Manufacturer
RWR89#R715%&	0.715	3	S, W, N, Z	B, D, F	S	P, R	DAL, SHA, TEP
RWR89#R723%&	0.723	3	S, W, N, Z	B, D	S	P, R	DAL, SHA, TEP
RWR89#R732%&	0.732	3	S, W, N, Z	B, D, F	S	P, R	DAL, SHA, TEP
RWR89#R741%&	0.741	3	S, W, N, Z	B, D	S	P, R	DAL, SHA, TEP
RWR89#R750%&	0.750	3	S, W, N, Z	B, D, F	S	P, R	DAL, SHA, TEP
RWR89#R759%&	0.759	3	S, W, N, Z	B, D	S	P, R	DAL, SHA, TEP
RWR89#R768%&	0.768	3	S, W, N, Z	B, D, F	S	P, R	DAL, SHA, TEP
RWR89#R776%&	0.776	3	S, W, N, Z	B, D	S	P, R	DAL, SHA, TEP
RWR89#R787%&	0.787	3	S, W, N, Z	B, D, F	S	P, R	DAL, SHA, TEP
RWR89#R796%&	0.796	3	S, W, N, Z	B, D	S	P, R	DAL, SHA, TEP
RWR89#R806%&	0.806	3	S, W, N, Z	B, D, F	S	P, R	DAL, SHA, TEP
RWR89#R816%&	0.816	3	S, W, N, Z	B, D	S	P, R	DAL, SHA, TEP
RWR89#R825%&	0.825	3	S, W, N, Z	B, D, F	S	P, R	DAL, SHA, TEP
RWR89#R835%&	0.835	3	S, W, N, Z	B, D	S	P, R	DAL, SHA, TEP
	Resistance	Power	Terminal	Resistance	Level 1	Level 2	
Part Number	Value (Ohms)	Rating (W)	Characteristic (#)	Tolerance (%)	(FRL)(&)	(FRL)(&)	Manufacturer
RWR89#R845%&	0.845	3	S, W, N, Z	B, D, F	S	P, R	DAL, SHA, TEP
RWR89#R856%&	0.856	3	S, W, N, Z	B, D	S	P, R	DAL, SHA, TEP
RWR89#R866%&	0.866	3	S, W, N, Z	B, D, F	S	P, R	DAL, SHA, TEP
RWR89#R876%&	0.876	3	S, W, N, Z	B, D	S	P, R	DAL, SHA, TEP
RWR89#R887%&	0.887	3	S, W, N, Z	B, D, F	S	P, R	DAL, SHA, TEP
RWR89#R898%&	0.898	3	S, W, N, Z	B, D	S	P, R	DAL, SHA, TEP
RWR89#R909%&	0.909	3	S, W, N, Z	B, D, F	S	P, R	DAL, SHA, TEP
RWR89#R920%&	0.920	3	S, W, N, Z	B, D	S	P, R	DAL, SHA, TEP
RWR89#R931%&	0.931	3	S, W, N, Z	B, D, F	S	P, R	DAL, SHA, TEP
RWR89#R942%&	0.942	3	S, W, N, Z	B, D	S	P, R	DAL, SHA, TEP
RWR89#R953%&	0.953	3	S, W, N, Z	B, D, F	S	P, R	DAL, SHA, TEP

RWR89#R965%&	0.965	3	S, W, N, Z	B, D	S	P, R	DAL, SHA, TEP
RWR89#R976%&	0.976	3	S, W, N, Z	B, D, F	S	P, R	DAL, SHA, TEP
RWR89#R988%&	0.988	3	S, W, N, Z	B, D	S	P, R	DAL, SHA, TEP
	Resistance	Power	Terminal	Resistance	Level 1	Level 2	
Part Number	Value (Ohms)	Rating (W)	Characteristic (#)	Tolerance (%)	(FRL)(&)	(FRL)(&)	Manufacturer

RWR89 Wirewound Resistors: 1.00 Ohms through 9.88 Ohms

	Resistance	Power	Terminal	Resistance	Level 1	Level 2	
Part Number	Value (Ohms)	Rating (W)	Characteristic (#)	Tolerance (%)	(FRL)(&)	(FRL)(&)	Manufacturer
RWR89#1R00%&	1.00	3	S, W, N, Z	B, D, F	S	P, R	DAL, SHA, TEP
RWR89#1R01%&	1.01	3	S, W, N, Z	B, D	S	P, R	DAL, SHA, TEP
RWR89#1R02%&	1.02	3	S, W, N, Z	B, D, F	S	P, R	DAL, SHA, TEP
RWR89#1R04%&	1.04	3	S, W, N, Z	B, D	S	P, R	DAL, SHA, TEP
RWR89#1R05%&	1.05	3	S, W, N, Z	B, D, F	S	P, R	DAL, SHA, TEP
RWR89#1R06%&	1.06	3	S, W, N, Z	B, D	S	P, R	DAL, SHA, TEP
RWR89#1R07%&	1.07	3	S, W, N, Z	B, D, F	S	P, R	DAL, SHA, TEP
	Resistance	Power	Terminal	Resistance	Level 1	Level 2	
Part Number	Value (Ohms)	Rating (W)	Characteristic (#)	Tolerance (%)	(FRL)(&)	(FRL)(&)	Manufacturer
RWR89#1R09%&	1.09	3	S, W, N, Z	B, D	S	P, R	DAL, SHA, TEP
RWR89#1R10%&	1.10	3	S, W, N, Z	B, D, F	S	P, R	DAL, SHA, TEP
RWR89#1R11%&	1.11	3	S, W, N, Z	B, D	S	P, R	DAL, SHA, TEP
RWR89#1R13%&	1.13	3	S, W, N, Z	B, D, F	S	P, R	DAL, SHA, TEP
RWR89#1R14%&	1.14	3	S, W, N, Z	B, D	S	P, R	DAL, SHA, TEP
RWR89#1R15%&	1.15	3	S, W, N, Z	B, D, F	S	P, R	DAL, SHA, TEP
RWR89#1R17%&	1.17	3	S, W, N, Z	B, D	S	P, R	DAL, SHA, TEP
	Resistance	Power	Terminal	Resistance	Level 1	Level 2	
Part Number	Value (Ohms)	Rating (W)	Characteristic (#)	Tolerance (%)	(FRL)(&)	(FRL)(&)	Manufacturer
RWR89#1R18%&	1.18	3	S, W, N, Z	B, D, F	S	P, R	DAL, SHA, TEP
RWR89#1R20%&	1.20	3	S, W, N, Z	B, D	S	P, R	DAL, SHA, TEP
RWR89#1R21%&	1.21	3	S, W, N, Z	B, D, F	S	P, R	DAL, SHA, TEP
RWR89#1R23%&	1.23	3	S, W, N, Z	B, D	S	P, R	DAL, SHA, TEP
RWR89#1R24%&	1.24	3	S, W, N, Z	B, D, F	S	P, R	DAL, SHA, TEP
RWR89#1R26%&	1.26	3	S, W, N, Z	B, D	S	P, R	DAL, SHA, TEP
RWR89#1R27%&	1.27	3	S, W, N, Z	B, D, F	S	P, R	DAL, SHA, TEP
	Resistance	Power	Terminal	Resistance	Level 1	Level 2	
Part Number	Value (Ohms)	Rating (W)	Characteristic (#)	Tolerance (%)	(FRL)(&)	(FRL)(&)	Manufacturer
RWR89#1R29%&	1.29	3	S, W, N, Z	B, D	S	P, R	DAL, SHA, TEP
RWR89#1R30%&	1.30	3	S, W, N, Z	B, D, F	S	P, R	DAL, SHA, TEP
RWR89#1R32%&	1.32	3	S, W, N, Z	B, D	S	P, R	DAL, SHA, TEP
RWR89#1R33%&	1.33	3	S, W, N, Z	B, D, F	S	P, R	DAL, SHA, TEP
RWR89#1R35%&	1.35	3	S, W, N, Z	B, D	S	P, R	DAL, SHA, TEP
RWR89#1R37%&	1.37	3	S, W, N, Z	B, D, F	S	P, R	DAL, SHA, TEP
RWR89#1R38%&	1.38	3	S, W, N, Z	B, D	S	P, R	DAL, SHA, TEP
	Resistance	Power	Terminal	Resistance	Level 1	Level 2	

Part Number	Value (Ohms)	Rating (W)	Characteristic (#)	Tolerance (%)	(FRL)(&)	(FRL)(&)	Manufacturer
RWR89#1R40%&	1.40	3	S, W, N, Z	B, D, F	S	P, R	DAL, SHA, TEP
RWR89#1R42%&	1.42	3	S, W, N, Z	B, D	S	P, R	DAL, SHA, TEP
RWR89#1R43%&	1.43	3	S, W, N, Z	B, D, F	S	P, R	DAL, SHA, TEP
RWR89#1R45%&	1.45	3	S, W, N, Z	B, D	S	P, R	DAL, SHA, TEP
RWR89#1R47%&	1.47	3	S, W, N, Z	B, D, F	S	P, R	DAL, SHA, TEP
RWR89#1R49%&	1.49	3	S, W, N, Z	B, D	S	P, R	DAL, SHA, TEP
RWR89#1R50%&	1.50	3	S, W, N, Z	B, D, F	S	P, R	DAL, SHA, TEP
	Resistance	Power	Terminal	Resistance	Level 1	Level 2	
Part Number	Value (Ohms)	Rating (W)	Characteristic (#)	Tolerance (%)	(FRL)(&)	(FRL)(&)	Manufacturer
RWR89#1R52%&	1.52	3	S, W, N, Z	B, D	S	P, R	DAL, SHA, TEP
RWR89#1R54%&	1.54	3	S, W, N, Z	B, D, F	S	P, R	DAL, SHA, TEP
RWR89#1R56%&	1.56	3	S, W, N, Z	B, D	S	P, R	DAL, SHA, TEP
RWR89#1R58%&	1.58	3	S, W, N, Z	B, D, F	S	P, R	DAL, SHA, TEP
RWR89#1R60%&	1.60	3	S, W, N, Z	B, D	S	P, R	DAL, SHA, TEP
RWR89#1R62%&	1.62	3	S, W, N, Z	B, D, F	S	P, R	DAL, SHA, TEP
RWR89#1R64%&	1.64	3	S, W, N, Z	B, D	S	P, R	DAL, SHA, TEP
	Resistance	Power	Terminal	Resistance	Level 1	Level 2	
Part Number	Value (Ohms)	Rating (W)	Characteristic (#)	Tolerance (%)	(FRL)(&)	(FRL)(&)	Manufacturer
RWR89#1R65%&	1.65	3	S, W, N, Z	B, D, F	S	P, R	DAL, SHA, TEP
RWR89#1R67%&	1.67	3	S, W, N, Z	B, D	S	P, R	DAL, SHA, TEP
RWR89#1R69%&	1.69	3	S, W, N, Z	B, D, F	S	P, R	DAL, SHA, TEP
RWR89#1R72%&	1.72	3	S, W, N, Z	B, D	S	P, R	DAL, SHA, TEP
RWR89#1R74%&	1.74	3	S, W, N, Z	B, D, F	S	P, R	DAL, SHA, TEP
RWR89#1R76%&	1.76	3	S, W, N, Z	B, D	S	P, R	DAL, SHA, TEP
RWR89#1R78%&	1.78	3	S, W, N, Z	B, D, F	S	P, R	DAL, SHA, TEP
	Resistance	Power	Terminal	Resistance	Level 1	Level 2	
Part Number	Value (Ohms)	Rating (W)	Characteristic (#)	Tolerance (%)	(FRL)(&)	(FRL)(&)	Manufacturer
RWR89#1R80%&	1.80	3	S, W, N, Z	B, D, F	S	P, R	DAL, SHA, TEP
RWR89#1R82%&	1.82	3	S, W, N, Z	B, D, F	S	P, R	DAL, SHA, TEP
RWR89#1R84%&	1.84	3	S, W, N, Z	B, D	S	P, R	DAL, SHA, TEP
RWR89#1R87%&	1.87	3	S, W, N, Z	B, D, F	S	P, R	DAL, SHA, TEP
RWR89#1R89#&	1.89	3	S, W, N, Z	B, D	S	P, R	DAL, SHA, TEP
RWR89#1R91%&	1.91	3	S, W, N, Z	B, D, F	S	P, R	DAL, SHA, TEP
RWR89#1R93%&	1.93	3	S, W, N, Z	B, D	S	P, R	DAL, SHA, TEP
	Resistance	Power	Terminal	Resistance	Level 1	Level 2	
Part Number	Value (Ohms)	Rating (W)	Characteristic (#)	Tolerance (%)	(FRL)(&)	(FRL)(&)	Manufacturer
RWR89#1R96%&	1.96	3	S, W, N, Z	B, D, F	S	P, R	DAL, SHA, TEP
RWR89#1R98%&	1.98	3	S, W, N, Z	B, D	S	P, R	DAL, SHA, TEP
RWR89#2R00%&	2.00	3	S, W, N, Z	B, D, F	S	P, R	DAL, SHA, TEP
RWR89#2R03%&	2.03	3	S, W, N, Z	B, D	S	P, R	DAL, SHA, TEP
RWR89#2R05%&	2.05	3	S, W, N, Z	B, D, F	S	P, R	DAL, SHA, TEP
RWR89#2R08%&	2.08	3	S, W, N, Z	B, D	S	P, R	DAL, SHA, TEP
RWR89#2R10%&	2.10	3	S, W, N, Z	B, D, F	S	P, R	DAL, SHA, TEP
	Resistance	Power	Terminal	Resistance	Level 1	Level 2	
Part Number	Value (Ohms)	Rating (W)	Characteristic (#)	Tolerance (%)	(FRL)(&)	(FRL)(&)	Manufacturer
RWR89#2R13%&	2.13	3	S, W, N, Z	B, D	S	P, R	DAL, SHA, TEP

RWR89#2R15%&	2.15	3	S, W, N, Z	B, D, F	S	P, R	DAL, SHA, TEP
RWR89#2R18%&	2.18	3	S, W, N, Z	B, D	S	P, R	DAL, SHA, TEP
RWR89#2R21%&	2.21	3	S, W, N, Z	B, D, F	S	P, R	DAL, SHA, TEP
RWR89#2R23%&	2.23	3	S, W, N, Z	B, D	S	P, R	DAL, SHA, TEP
RWR89#2R26%&	2.26	3	S, W, N, Z	B, D, F	S	P, R	DAL, SHA, TEP
RWR89#2R29%&	2.29	3	S, W, N, Z	B, D	S	P, R	DAL, SHA, TEP
	Resistance	Power	Terminal	Resistance	Level 1	Level 2	
Part Number	Value (Ohms)	Rating (W)	Characteristic (#)	Tolerance (%)	(FRL)(&)	(FRL)(&)	Manufacturer
RWR89#2R32%&	2.32	3	S, W, N, Z	B, D, F	S	P, R	DAL, SHA, TEP
RWR89#2R34%&	2.34	3	S, W, N, Z	B, D	S	P, R	DAL, SHA, TEP
RWR89#2R37%&	2.37	3	S, W, N, Z	B, D, F	S	P, R	DAL, SHA, TEP
RWR89#2R40%&	2.40	3	S, W, N, Z	B, D	S	P, R	DAL, SHA, TEP
RWR89#2R43%&	2.43	3	S, W, N, Z	B, D, F	S	P, R	DAL, SHA, TEP
RWR89#2R46%&	2.46	3	S, W, N, Z	B, D	S	P, R	DAL, SHA, TEP
RWR89#2R49%&	2.49	3	S, W, N, Z	B, D, F	S	P, R	DAL, SHA, TEP
	Resistance	Power	Terminal	Resistance	Level 1	Level 2	
Part Number	Value (Ohms)	Rating (W)	Characteristic (#)	Tolerance (%)	(FRL)(&)	(FRL)(&)	Manufacturer
RWR89#2R52%&	2.52	3	S, W, N, Z	B, D	S	P, R	DAL, SHA, TEP
RWR89#2R55%&	2.55	3	S, W, N, Z	B, D, F	S	P, R	DAL, SHA, TEP
RWR89#2R58%&	2.58	3	S, W, N, Z	B, D	S	P, R	DAL, SHA, TEP
RWR89#2R61%&	2.61	3	S, W, N, Z	B, D, F	S	P, R	DAL, SHA, TEP
RWR89#2R64%&	2.64	3	S, W, N, Z	B, D	S	P, R	DAL, SHA, TEP
RWR89#2R67%&	2.67	3	S, W, N, Z	B, D, F	S	P, R	DAL, SHA, TEP
RWR89#2R71%&	2.71	3	S, W, N, Z	B, D	S	P, R	DAL, SHA, TEP
	Resistance	Power	Terminal	Resistance	Level 1	Level 2	
Part Number	Value (Ohms)	Rating (W)	Characteristic (#)	Tolerance (%)	(FRL)(&)	(FRL)(&)	Manufacturer
RWR89#2R74%&	2.74	3	S, W, N, Z	B, D, F	S	P, R	DAL, SHA, TEP
RWR89#2R77%&	2.77	3	S, W, N, Z	B, D	S	P, R	DAL, SHA, TEP
RWR89#2R80%&	2.80	3	S, W, N, Z	B, D, F	S	P, R	DAL, SHA, TEP
RWR89#2R84%&	2.84	3	S, W, N, Z	B, D	S	P, R	DAL, SHA, TEP
RWR89#2R87%&	2.87	3	S, W, N, Z	B, D, F	S	P, R	DAL, SHA, TEP
RWR89#2R91%&	2.91	3	S, W, N, Z	B, D	S	P, R	DAL, SHA, TEP
RWR89#2R94%&	2.94	3	S, W, N, Z	B, D, F	S	P, R	DAL, SHA, TEP
	Resistance	Power	Terminal	Resistance	Level 1	Level 2	
Part Number	Value (Ohms)	Rating (W)	Characteristic (#)	Tolerance (%)	(FRL)(&)	(FRL)(&)	Manufacturer
RWR89#2R98%&	2.98	3	S, W, N, Z	B, D	S	P, R	DAL, SHA, TEP
RWR89#3R01%&	3.01	3	S, W, N, Z	B, D, F	S	P, R	DAL, SHA, TEP
RWR89#3R05%&	3.05	3	S, W, N, Z	B, D	S	P, R	DAL, SHA, TEP
RWR89#3R09%&	3.09	3	S, W, N, Z	B, D, F	S	P, R	DAL, SHA, TEP
RWR89#3R12%&	3.12	3	S, W, N, Z	B, D	S	P, R	DAL, SHA, TEP
RWR89#3R16%&	3.16	3	S, W, N, Z	B, D, F	S	P, R	DAL, SHA, TEP
RWR89#3R20%&	3.20	3	S, W, N, Z	B, D	S	P, R	DAL, SHA, TEP
	Resistance	Power	Terminal	Resistance	Level 1	Level 2	
Part Number	Value (Ohms)	Rating (W)	Characteristic (#)	Tolerance (%)	(FRL)(&)	(FRL)(&)	Manufacturer
RWR89#3R24%&	3.24	3	S, W, N, Z	B, D, F	S	P, R	DAL, SHA, TEP
RWR89#3R28%&	3.28	3	S, W, N, Z	B, D	S	P, R	DAL, SHA, TEP
RWR89#3R32%&	3.32	3	S, W, N, Z	B, D, F	S	P, R	DAL, SHA, TEP

RWR89#3R36%&	3.36	3	S, W, N, Z	B, D	S	P, R	DAL, SHA, TEP
RWR89#3R40%&	3.40	3	S, W, N, Z	B, D, F	S	P, R	DAL, SHA, TEP
RWR89#3R44%&	3.44	3	S, W, N, Z	B, D	S	P, R	DAL, SHA, TEP
RWR89#3R48%&	3.48	3	S, W, N, Z	B, D, F	S	P, R	DAL, SHA, TEP
	Resistance	Power	Terminal	Resistance	Level 1	Level 2	
Part Number	Value (Ohms)	Rating (W)	Characteristic (#)	Tolerance (%)	(FRL)(&)	(FRL)(&)	Manufacturer
RWR89#3R52%&	3.52	3	S, W, N, Z	B, D	S	P, R	DAL, SHA, TEP
RWR89#3R57%&	3.57	3	S, W, N, Z	B, D, F	S	P, R	DAL, SHA, TEP
RWR89#3R61%&	3.61	3	S, W, N, Z	B, D	S	P, R	DAL, SHA, TEP
RWR89#3R65%&	3.65	3	S, W, N, Z	B, D, F	S	P, R	DAL, SHA, TEP
RWR89#3R70%&	3.70	3	S, W, N, Z	B, D	S	P, R	DAL, SHA, TEP
RWR89#3R74%&	3.74	3	S, W, N, Z	B, D, F	S	P, R	DAL, SHA, TEP
RWR89#3R79%&	3.79	3	S, W, N, Z	B, D	S	P, R	DAL, SHA, TEP
	Resistance	Power	Terminal	Resistance	Level 1	Level 2	
Part Number	Value (Ohms)	Rating (W)	Characteristic (#)	Tolerance (%)	(FRL)(&)	(FRL)(&)	Manufacturer
RWR89#3R83%&	3.83	3	S, W, N, Z	B, D, F	S	P, R	DAL, SHA, TEP
RWR89#3R88%&	3.88	3	S, W, N, Z	B, D	S	P, R	DAL, SHA, TEP
RWR89#3R92%&	3.92	3	S, W, N, Z	B, D, F	S	P, R	DAL, SHA, TEP
RWR89#3R97%&	3.97	3	S, W, N, Z	B, D	S	P, R	DAL, SHA, TEP
RWR89#4R02%&	4.02	3	S, W, N, Z	B, D, F	S	P, R	DAL, SHA, TEP
RWR89#4R07%&	4.07	3	S, W, N, Z	B, D	S	P, R	DAL, SHA, TEP
RWR89#4R12%&	4.12	3	S, W, N, Z	B, D, F	S	P, R	DAL, SHA, TEP
	Resistance	Power	Terminal	Resistance	Level 1	Level 2	
Part Number	Value (Ohms)	Rating (W)	Characteristic (#)	Tolerance (%)	(FRL)(&)	(FRL)(&)	Manufacturer
RWR89#4R17%&	4.17	3	S, W, N, Z	B, D	S	P, R	DAL, SHA, TEP
RWR89#4R22%&	4.22	3	S, W, N, Z	B, D, F	S	P, R	DAL, SHA, TEP
RWR89#4R27%&	4.27	3	S, W, N, Z	B, D	S	P, R	DAL, SHA, TEP
RWR89#4R32%&	4.32	3	S, W, N, Z	B, D, F	S	P, R	DAL, SHA, TEP
RWR89#4R37%&	4.37	3	S, W, N, Z	B, D	S	P, R	DAL, SHA, TEP
RWR89#4R42%&	4.42	3	S, W, N, Z	B, D, F	S	P, R	DAL, SHA, TEP
RWR89#4R48%&	4.48	3	S, W, N, Z	B, D	S	P, R	DAL, SHA, TEP
	Resistance	Power	Terminal	Resistance	Level 1	Level 2	
Part Number	Value (Ohms)	Rating (W)	Characteristic (#)	Tolerance (%)	(FRL)(&)	(FRL)(&)	Manufacturer
RWR89#4R53%&	4.53	3	S, W, N, Z	B, D, F	S	P, R	DAL, SHA, TEP
RWR89#4R59%&	4.59	3	S, W, N, Z	B, D	S	P, R	DAL, SHA, TEP
RWR89#4R64%&	4.64	3	S, W, N, Z	B, D, F	S	P, R	DAL, SHA, TEP
RWR89#4R70%&	4.70	3	S, W, N, Z	B, D	S	P, R	DAL, SHA, TEP
RWR89#4R75%&	4.75	3	S, W, N, Z	B, D, F	S	P, R	DAL, SHA, TEP
RWR89#4R81%&	4.81	3	S, W, N, Z	B, D	S	P, R	DAL, SHA, TEP
RWR89#4R87%&	4.87	3	S, W, N, Z	B, D, F	S	P, R	DAL, SHA, TEP
	Resistance	Power	Terminal	Resistance	Level 1	Level 2	
Part Number	Value (Ohms)	Rating (W)	Characteristic (#)	Tolerance (%)	(FRL)(&)	(FRL)(&)	Manufacturer
RWR89#4R93%&	4.93	3	S, W, N, Z	B, D	S	P, R	DAL, SHA, TEP
RWR89#4R99%&	4.99	3	S, W, N, Z	B, D, F	S	P, R	DAL, SHA, TEP
RWR89#5R05%&	5.05	3	S, W, N, Z	B, D	S	P, R	DAL, SHA, TEP
RWR89#5R11%&	5.11	3	S, W, N, Z	B, D, F	S	P, R	DAL, SHA, TEP
RWR89#5R17%&	5.17	3	S, W, N, Z	B, D	S	P, R	DAL, SHA, TEP

RWR89#5R23%&	5.23	3	S, W, N, Z	B, D, F	S	P, R	DAL, SHA, TEP
RWR89#5R30%&	5.30	3	S, W, N, Z	B, D	S	P, R	DAL, SHA, TEP
	Resistance	Power	Terminal	Resistance	Level 1	Level 2	
Part Number	Value (Ohms)	Rating (W)	Characteristic (#)	Tolerance (%)	(FRL)(&)	(FRL)(&)	Manufacturer
RWR89#5R36%&	5.36	3	S, W, N, Z	B, D, F	S	P, R	DAL, SHA, TEP
RWR89#5R42%&	5.42	3	S, W, N, Z	B, D	S	P, R	DAL, SHA, TEP
RWR89#5R49%&	5.49	3	S, W, N, Z	B, D, F	S	P, R	DAL, SHA, TEP
RWR89#5R56%&	5.56	3	S, W, N, Z	B, D	S	P, R	DAL, SHA, TEP
RWR89#5R62%&	5.62	3	S, W, N, Z	B, D, F	S	P, R	DAL, SHA, TEP
RWR89#5R69%&	5.69	3	S, W, N, Z	B, D	S	P, R	DAL, SHA, TEP
RWR89#5R76%&	5.76	3	S, W, N, Z	B, D, F	S	P, R	DAL, SHA, TEP
	Resistance	Power	Terminal	Resistance	Level 1	Level 2	
Part Number	Value (Ohms)	Rating (W)	Characteristic (#)	Tolerance (%)	(FRL)(&)	(FRL)(&)	Manufacturer
RWR89#5R83%&	5.83	3	S, W, N, Z	B, D	S	P, R	DAL, SHA, TEP
RWR89#5R90%&	5.90	3	S, W, N, Z	B, D, F	S	P, R	DAL, SHA, TEP
RWR89#5R97%&	5.97	3	S, W, N, Z	B, D	S	P, R	DAL, SHA, TEP
RWR89#6R04%&	6.04	3	S, W, N, Z	B, D, F	S	P, R	DAL, SHA, TEP
RWR89#6R12%&	6.12	3	S, W, N, Z	B, D	S	P, R	DAL, SHA, TEP
RWR89#6R19%&	6.19	3	S, W, N, Z	B, D, F	S	P, R	DAL, SHA, TEP
RWR89#6R26%&	6.26	3	S, W, N, Z	B, D	S	P, R	DAL, SHA, TEP
	Resistance	Power	Terminal	Resistance	Level 1	Level 2	
Part Number	Value (Ohms)	Rating (W)	Characteristic (#)	Tolerance (%)	(FRL)(&)	(FRL)(&)	Manufacturer
RWR89#6R34%&	6.34	3	S, W, N, Z	B, D, F	S	P, R	DAL, SHA, TEP
RWR89#6R42%&	6.42	3	S, W, N, Z	B, D	S	P, R	DAL, SHA, TEP
RWR89#6R49%&	6.49	3	S, W, N, Z	B, D, F	S	P, R	DAL, SHA, TEP
RWR89#6R57%&	6.57	3	S, W, N, Z	B, D	S	P, R	DAL, SHA, TEP
RWR89#6R65%&	6.65	3	S, W, N, Z	B, D, F	S	P, R	DAL, SHA, TEP
RWR89#6R73%&	6.73	3	S, W, N, Z	B, D	S	P, R	DAL, SHA, TEP
RWR89#6R81%&	6.81	3	S, W, N, Z	B, D, F	S	P, R	DAL, SHA, TEP
	Resistance	Power	Terminal	Resistance	Level 1	Level 2	
Part Number	Value (Ohms)	Rating (W)	Characteristic (#)	Tolerance (%)	(FRL)(&)	(FRL)(&)	Manufacturer
RWR89#6R90%&	6.90	3	S, W, N, Z	B, D	S	P, R	DAL, SHA, TEP
RWR89#6R98%&	6.98	3	S, W, N, Z	B, D, F	S	P, R	DAL, SHA, TEP
RWR89#7R06%&	7.06	3	S, W, N, Z	B, D	S	P, R	DAL, SHA, TEP
RWR89#7R15%&	7.15	3	S, W, N, Z	B, D, F	S	P, R	DAL, SHA, TEP
RWR89#7R23%&	7.23	3	S, W, N, Z	B, D	S	P, R	DAL, SHA, TEP
RWR89#7R32%&	7.32	3	S, W, N, Z	B, D, F	S	P, R	DAL, SHA, TEP
RWR89#7R41%&	7.41	3	S, W, N, Z	B, D	S	P, R	DAL, SHA, TEP
	Resistance	Power	Terminal	Resistance	Level 1	Level 2	
Part Number	Value (Ohms)	Rating (W)	Characteristic (#)	Tolerance (%)	(FRL)(&)	(FRL)(&)	Manufacturer
RWR89#7R50%&	7.50	3	S, W, N, Z	B, D, F	S	P, R	DAL, SHA, TEP
RWR89#7R59%&	7.59	3	S, W, N, Z	B, D	S	P, R	DAL, SHA, TEP
RWR89#7R68%&	7.68	3	S, W, N, Z	B, D, F	S	P, R	DAL, SHA, TEP
RWR89#7R77%&	7.77	3	S, W, N, Z	B, D	S	P, R	DAL, SHA, TEP
RWR89#7R87%&	7.87	3	S, W, N, Z	B, D, F	S	P, R	DAL, SHA, TEP
RWR89#7R96%&	7.96	3	S, W, N, Z	B, D	S	P, R	DAL, SHA, TEP
RWR89#8R06%&	8.06	3	S, W, N, Z	B, D, F	S	P, R	DAL, SHA, TEP

	Resistance	Power	Terminal	Resistance	Level 1	Level 2	
Part Number	Value (Ohms)	Rating (W)	Characteristic (#)	Tolerance (%)	(FRL)(&)	(FRL)(&)	Manufacturer
RWR89#8R16%&	8.16	3	S, W, N, Z	B, D	S	P, R	DAL, SHA, TEP
RWR89#8R25%&	8.25	3	S, W, N, Z	B, D, F	S	P, R	DAL, SHA, TEP
RWR89#8R35%&	8.35	3	S, W, N, Z	B, D	S	P, R	DAL, SHA, TEP
RWR89#8R45%&	8.45	3	S, W, N, Z	B, D, F	S	P, R	DAL, SHA, TEP
RWR89#8R56%&	8.56	3	S, W, N, Z	B, D	S	P, R	DAL, SHA, TEP
RWR89#8R66%&	8.66	3	S, W, N, Z	B, D, F	S	P, R	DAL, SHA, TEP
RWR89#8R76%&	8.76	3	S, W, N, Z	B, D	S	P, R	DAL, SHA, TEP
	Resistance	Power	Terminal	Resistance	Level 1	Level 2	
Part Number	Value (Ohms)	Rating (W)	Characteristic (#)	Tolerance (%)	(FRL)(&)	(FRL)(&)	Manufacturer
RWR89#8R87%&	8.87	3	S, W, N, Z	B, D, F	S	P, R	DAL, SHA, TEP
RWR89#8R98%&	8.98	3	S, W, N, Z	B, D	S	P, R	DAL, SHA, TEP
RWR89#9R09%&	9.09	3	S, W, N, Z	B, D, F	S	P, R	DAL, SHA, TEP
RWR89#9R20%&	9.20	3	S, W, N, Z	B, D	S	P, R	DAL, SHA, TEP
RWR89#9R31%&	9.31	3	S, W, N, Z	B, D, F	S	P, R	DAL, SHA, TEP
RWR89#9R42%&	9.42	3	S, W, N, Z	B, D	S	P, R	DAL, SHA, TEP
RWR89#9R53%&	9.53	3	S, W, N, Z	B, D, F	S	P, R	DAL, SHA, TEP
	Resistance	Power	Terminal	Resistance	Level 1	Level 2	
Part Number	Value (Ohms)	Rating (W)	Characteristic (#)	Tolerance (%)	(FRL)(&)	(FRL)(&)	Manufacturer
RWR89#9R65%&	9.65	3	S, W, N, Z	B, D	S	P, R	DAL, SHA, TEP
RWR89#9R76%&	9.76	3	S, W, N, Z	B, D, F	S	P, R	DAL, SHA, TEP
RWR89#9R88%&	9.88	3	S, W, N, Z	B, D	S	P, R	DAL, SHA, TEP

RWR89 Wirewound Resistors: 10.0 Ohms through 98.8 Ohms

	Resistance	Power	Terminal	Resistance	Level 1	Level 2	
Part Number	Value (Ohms)	Rating (W)	Characteristic (#)	Tolerance (%)	(FRL)(&)	(FRL)(&)	Manufacturer
RWR89#10R0%&	10.0	3	S, W, N, Z	B, D	S	P, R	DAL, SHA, TEP
RWR89#10R1%&	10.1	3	S, W, N, Z	B, D	S	P, R	DAL, SHA, TEP
RWR89#10R2%&	10.2	3	S, W, N, Z	B, D, F	S	P, R	DAL, SHA, TEP
RWR89#10R4%&	10.4	3	S, W, N, Z	B, D	S	P, R	DAL, SHA, TEP
RWR89#10R5%&	10.5	3	S, W, N, Z	B, D, F	S	P, R	DAL, SHA, TEP
RWR89#10R6%&	10.6	3	S, W, N, Z	B, D	S	P, R	DAL, SHA, TEP
RWR89#10R7%&	10.7	3	S, W, N, Z	B, D, F	S	P, R	DAL, SHA, TEP
RWR89#10R9%&	10.9	3	S, W, N, Z	B, D	S	P, R	DAL, SHA, TEP
RWR89#11R0%&	11.0	3	S, W, N, Z	B, D, F	S	P, R	DAL, SHA, TEP
RWR89#11R1%&	11.1	3	S, W, N, Z	B, D	S	P, R	DAL, SHA, TEP
RWR89#11R3%&	11.3	3	S, W, N, Z	B, D, F	S	P, R	DAL, SHA, TEP
RWR89#11R4%&	11.4	3	S, W, N, Z	B, D	S	P, R	DAL, SHA, TEP
RWR89#11R5%&	11.5	3	S, W, N, Z	B, D, F	S	P, R	DAL, SHA, TEP
RWR89#11R7%&	11.7	3	S, W, N, Z	B, D	S	P, R	DAL, SHA, TEP
	Resistance	Power	Terminal	Resistance	Level 1	Level 2	
Part Number	Value (Ohms)	Rating (W)	Characteristic (#)	Tolerance (%)	(FRL)(&)	(FRL)(&)	Manufacturer
	Resistance	Power	Terminal	Resistance	Level 1	Level 2	

Part Number	Value (Ohms)	Rating (W)	Characteristic (#)	Tolerance (%)	(FRL)(&)	(FRL)(&)	Manufacturer
RWR89#11R8%&	11.8	3	S, W, N, Z	B, D, F	S	P, R	DAL, SHA, TEP
RWR89#12R0%&	12.0	3	S, W, N, Z	B, D	S	P, R	DAL, SHA, TEP
RWR89#12R1%&	12.1	3	S, W, N, Z	B, D, F	S	P, R	DAL, SHA, TEP
RWR89#12R3%&	12.3	3	S, W, N, Z	B, D	S	P, R	DAL, SHA, TEP
RWR89#12R4%&	12.4	3	S, W, N, Z	B, D, F	S	P, R	DAL, SHA, TEP
RWR89#12R6%&	12.6	3	S, W, N, Z	B, D	S	P, R	DAL, SHA, TEP
RWR89#12R7%&	12.7	3	S, W, N, Z	B, D, F	S	P, R	DAL, SHA, TEP
RWR89#12R9%&	12.9	3	S, W, N, Z	B, D	S	P, R	DAL, SHA, TEP
RWR89#13R0%&	13.0	3	S, W, N, Z	B, D, F	S	P, R	DAL, SHA, TEP
RWR89#13R2%&	13.2	3	S, W, N, Z	B, D	S	P, R	DAL, SHA, TEP
RWR89#13R3%&	13.3	3	S, W, N, Z	B, D, F	S	P, R	DAL, SHA, TEP
RWR89#13R5%&	13.5	3	S, W, N, Z	B, D	S	P, R	DAL, SHA, TEP
RWR89#13R7%&	13.7	3	S, W, N, Z	B, D, F	S	P, R	DAL, SHA, TEP
RWR89#13R8%&	13.8	3	S, W, N, Z	B, D	S	P, R	DAL, SHA, TEP
	Resistance	Power	Terminal	Resistance	Level 1	Level 2	
Part Number	Value (Ohms)	Rating (W)	Characteristic (#)	Tolerance (%)	(FRL)(&)	(FRL)(&)	Manufacturer
RWR89#14R0%&	14.0	3	S, W, N, Z	B, D, F	S	P, R	DAL, SHA, TEP
RWR89#14R2%&	14.2	3	S, W, N, Z	B, D	S	P, R	DAL, SHA, TEP
RWR89#14R3%&	14.3	3	S, W, N, Z	B, D, F	S	P, R	DAL, SHA, TEP
RWR89#14R5%&	14.5	3	S, W, N, Z	B, D	S	P, R	DAL, SHA, TEP
RWR89#14R7%&	14.7	3	S, W, N, Z	B, D, F	S	P, R	DAL, SHA, TEP
RWR89#14R9%&	14.9	3	S, W, N, Z	B, D	S	P, R	DAL, SHA, TEP
RWR89#15R0%&	15.0	3	S, W, N, Z	B, D, F	S	P, R	DAL, SHA, TEP
RWR89#15R2%&	15.2	3	S, W, N, Z	B, D	S	P, R	DAL, SHA, TEP
RWR89#15R4%&	15.4	3	S, W, N, Z	B, D, F	S	P, R	DAL, SHA, TEP
RWR89#15R6%&	15.6	3	S, W, N, Z	B, D	S	P, R	DAL, SHA, TEP
RWR89#15R8%&	15.8	3	S, W, N, Z	B, D, F	S	P, R	DAL, SHA, TEP
RWR89#16R0%&	16.0	3	S, W, N, Z	B, D	S	P, R	DAL, SHA, TEP
RWR89#16R2%&	16.2	3	S, W, N, Z	B, D, F	S	P, R	DAL, SHA, TEP
RWR89#16R4%&	16.4	3	S, W, N, Z	B, D	S	P, R	DAL, SHA, TEP
	Resistance	Power	Terminal	Resistance	Level 1	Level 2	
Part Number	Value (Ohms)	Rating (W)	Characteristic (#)	Tolerance (%)	(FRL)(&)	(FRL)(&)	Manufacturer
RWR89#16R5%&	16.5	3	S, W, N, Z	B, D, F	S	P, R	DAL, SHA, TEP
RWR89#16R7%&	16.7	3	S, W, N, Z	B, D	S	P, R	DAL, SHA, TEP
RWR89#16R9%&	16.9	3	S, W, N, Z	B, D, F	S	P, R	DAL, SHA, TEP
RWR89#17R2%&	17.2	3	S, W, N, Z	B, D	S	P, R	DAL, SHA, TEP
RWR89#17R4%&	17.4	3	S, W, N, Z	B, D, F	S	P, R	DAL, SHA, TEP
RWR89#17R6%&	17.6	3	S, W, N, Z	B, D	S	P, R	DAL, SHA, TEP
RWR89#17R8%&	17.8	3	S, W, N, Z	B, D, F	S	P, R	DAL, SHA, TEP
RWR89#18R0%&	18.0	3	S, W, N, Z	B, D, F	S	P, R	DAL, SHA, TEP
RWR89#18R2%&	18.2	3	S, W, N, Z	B, D, F	S	P, R	DAL, SHA, TEP
RWR89#18R4%&	18.4	3	S, W, N, Z	B, D	S	P, R	DAL, SHA, TEP
RWR89#18R7%&	18.7	3	S, W, N, Z	B, D, F	S	P, R	DAL, SHA, TEP
RWR89#18R9%&	18.9	3	S, W, N, Z	B, D	S	P, R	DAL, SHA, TEP
	Resistance	Power	Terminal	Resistance	Level 1	Level 2	
Part Number	Value (Ohms)	Rating (W)	Characteristic (#)	Tolerance (%)	(FRL)(&)	(FRL)(&)	Manufacturer

RWR89#19R1%&	19.1	3	S, W, N, Z	B, D, F	S	P, R	DAL, SHA, TEP
RWR89#19R3%&	19.3	3	S, W, N, Z	B, D	S	P, R	DAL, SHA, TEP
RWR89#19R6%&	19.6	3	S, W, N, Z	B, D, F	S	P, R	DAL, SHA, TEP
RWR89#19R8%&	19.8	3	S, W, N, Z	B, D	S	P, R	DAL, SHA, TEP
RWR89#20R0%&	20.0	3	S, W, N, Z	B, D, F	S	P, R	DAL, SHA, TEP
RWR89#20R3%&	20.3	3	S, W, N, Z	B, D	S	P, R	DAL, SHA, TEP
RWR89#20R5%&	20.5	3	S, W, N, Z	B, D, F	S	P, R	DAL, SHA, TEP
RWR89#20R8%&	20.8	3	S, W, N, Z	B, D	S	P, R	DAL, SHA, TEP
RWR89#21R0%&	21.0	3	S, W, N, Z	B, D, F	S	P, R	DAL, SHA, TEP
RWR89#21R3%&	21.3	3	S, W, N, Z	B, D	S	P, R	DAL, SHA, TEP
RWR89#21R5%&	21.5	3	S, W, N, Z	B, D, F	S	P, R	DAL, SHA, TEP
RWR89#21R8%&	21.8	3	S, W, N, Z	B, D	S	P, R	DAL, SHA, TEP
RWR89#22R1%&	22.1	3	S, W, N, Z	B, D, F	S	P, R	DAL, SHA, TEP
RWR89#22R3%&	22.3	3	S, W, N, Z	B, D	S	P, R	DAL, SHA, TEP
	Resistance	Power	Terminal	Resistance	Level 1	Level 2	
Part Number	Value (Ohms)	Rating (W)	Characteristic (#)	Tolerance (%)	(FRL)(&)	(FRL)(&)	Manufacturer
RWR89#22R6%&	22.6	3	S, W, N, Z	B, D, F	S	P, R	DAL, SHA, TEP
RWR89#22R9%&	22.9	3	S, W, N, Z	B, D	S	P, R	DAL, SHA, TEP
RWR89#23R2%&	23.2	3	S, W, N, Z	B, D, F	S	P, R	DAL, SHA, TEP
RWR89#23R4%&	23.4	3	S, W, N, Z	B, D	S	P, R	DAL, SHA, TEP
RWR89#23R7%&	23.7	3	S, W, N, Z	B, D, F	S	P, R	DAL, SHA, TEP
RWR89#24R0%&	24.0	3	S, W, N, Z	B, D	S	P, R	DAL, SHA, TEP
RWR89#24R3%&	24.3	3	S, W, N, Z	B, D, F	S	P, R	DAL, SHA, TEP
RWR89#24R6%&	24.6	3	S, W, N, Z	B, D	S	P, R	DAL, SHA, TEP
RWR89#24R9%&	24.9	3	S, W, N, Z	B, D, F	S	P, R	DAL, SHA, TEP
RWR89#25R2%&	25.2	3	S, W, N, Z	B, D	S	P, R	DAL, SHA, TEP
RWR89#25R5%&	25.5	3	S, W, N, Z	B, D, F	S	P, R	DAL, SHA, TEP
RWR89#25R8%&	25.8	3	S, W, N, Z	B, D	S	P, R	DAL, SHA, TEP
RWR89#26R1%&	26.1	3	S, W, N, Z	B, D, F	S	P, R	DAL, SHA, TEP
RWR89#26R4%&	26.4	3	S, W, N, Z	B, D	S	P, R	DAL, SHA, TEP
	Resistance	Power	Terminal	Resistance	Level 1	Level 2	
Part Number	Value (Ohms)	Rating (W)	Characteristic (#)	Tolerance (%)	(FRL)(&)	(FRL)(&)	Manufacturer
RWR89#26R7%&	26.7	3	S, W, N, Z	B, D, F	S	P, R	DAL, SHA, TEP
RWR89#27R1%&	27.1	3	S, W, N, Z	B, D	S	P, R	DAL, SHA, TEP
RWR89#27R4%&	27.4	3	S, W, N, Z	B, D, F	S	P, R	DAL, SHA, TEP
RWR89#27R7%&	27.7	3	S, W, N, Z	B, D	S	P, R	DAL, SHA, TEP
RWR89#28R0%&	28.0	3	S, W, N, Z	B, D, F	S	P, R	DAL, SHA, TEP
RWR89#28R4%&	28.4	3	S, W, N, Z	B, D	S	P, R	DAL, SHA, TEP
RWR89#28R7%&	28.7	3	S, W, N, Z	B, D, F	S	P, R	DAL, SHA, TEP
RWR89#29R1%&	29.1	3	S, W, N, Z	B, D	S	P, R	DAL, SHA, TEP
RWR89#29R4%&	29.4	3	S, W, N, Z	B, D, F	S	P, R	DAL, SHA, TEP
RWR89#29R8%&	29.8	3	S, W, N, Z	B, D	S	P, R	DAL, SHA, TEP
RWR89#30R1%&	30.1	3	S, W, N, Z	B, D, F	S	P, R	DAL, SHA, TEP
RWR89#30R5%&	30.5	3	S, W, N, Z	B, D	S	P, R	DAL, SHA, TEP
RWR89#30R9%&	30.9	3	S, W, N, Z	B, D, F	S	P, R	DAL, SHA, TEP
RWR89#31R2%&	31.2	3	S, W, N, Z	B, D	S	P, R	DAL, SHA, TEP
	Resistance	Power	Terminal	Resistance	Level 1	Level 2	

Part Number	Value (Ohms)	Rating (W)	Characteristic (#)	Tolerance (%)	(FRL)(&)	(FRL)(&)	Manufacturer
RWR89#31R6%&	31.6	3	S, W, N, Z	B, D, F	S	P, R	DAL, SHA, TEP
RWR89#32R0%&	32.0	3	S, W, N, Z	B, D	S	P, R	DAL, SHA, TEP
RWR89#32R4%&	32.4	3	S, W, N, Z	B, D, F	S	P, R	DAL, SHA, TEP
RWR89#32R8%&	32.8	3	S, W, N, Z	B, D	S	P, R	DAL, SHA, TEP
RWR89#33R2%&	33.2	3	S, W, N, Z	B, D, F	S	P, R	DAL, SHA, TEP
RWR89#33R6%&	33.6	3	S, W, N, Z	B, D	S	P, R	DAL, SHA, TEP
RWR89#34R0%&	34.0	3	S, W, N, Z	B, D, F	S	P, R	DAL, SHA, TEP
RWR89#34R4%&	34.4	3	S, W, N, Z	B, D	S	P, R	DAL, SHA, TEP
RWR89#34R8%&	34.8	3	S, W, N, Z	B, D, F	S	P, R	DAL, SHA, TEP
RWR89#35R2%&	35.2	3	S, W, N, Z	B, D	S	P, R	DAL, SHA, TEP
RWR89#35R7%&	35.7	3	S, W, N, Z	B, D, F	S	P, R	DAL, SHA, TEP
RWR89#36R1%&	36.1	3	S, W, N, Z	B, D	S	P, R	DAL, SHA, TEP
RWR89#36R5%&	36.5	3	S, W, N, Z	B, D, F	S	P, R	DAL, SHA, TEP
RWR89#37R0%&	37.0	3	S, W, N, Z	B, D	S	P, R	DAL, SHA, TEP
	Resistance	Power	Terminal	Resistance	Level 1	Level 2	
Part Number	Value (Ohms)	Rating (W)	Characteristic (#)	Tolerance (%)	(FRL)(&)	(FRL)(&)	Manufacturer
RWR89#37R4%&	37.4	3	S, W, N, Z	B, D, F	S	P, R	DAL, SHA, TEP
RWR89#37R9%&	37.9	3	S, W, N, Z	B, D	S	P, R	DAL, SHA, TEP
RWR89#38R3%&	38.3	3	S, W, N, Z	B, D, F	S	P, R	DAL, SHA, TEP
RWR89#38R8%&	38.8	3	S, W, N, Z	B, D	S	P, R	DAL, SHA, TEP
RWR89#39R2%&	39.2	3	S, W, N, Z	B, D, F	S	P, R	DAL, SHA, TEP
RWR89#39R7%&	39.7	3	S, W, N, Z	B, D	S	P, R	DAL, SHA, TEP
RWR89#40R2%&	40.2	3	S, W, N, Z	B, D, F	S	P, R	DAL, SHA, TEP
RWR89#40R7%&	40.7	3	S, W, N, Z	B, D	S	P, R	DAL, SHA, TEP
RWR89#41R2%&	41.2	3	S, W, N, Z	B, D, F	S	P, R	DAL, SHA, TEP
RWR89#41R7%&	41.7	3	S, W, N, Z	B, D	S	P, R	DAL, SHA, TEP
RWR89#42R2%&	42.2	3	S, W, N, Z	B, D, F	S	P, R	DAL, SHA, TEP
RWR89#42R7%&	42.7	3	S, W, N, Z	B, D	S	P, R	DAL, SHA, TEP
RWR89#43R2%&	43.2	3	S, W, N, Z	B, D, F	S	P, R	DAL, SHA, TEP
RWR89#43R7%&	43.7	3	S, W, N, Z	B, D	S	P, R	DAL, SHA, TEP
	Resistance	Power	Terminal	Resistance	Level 1	Level 2	
Part Number	Value (Ohms)	Rating (W)	Characteristic (#)	Tolerance (%)	(FRL)(&)	(FRL)(&)	Manufacturer
RWR89#44R2%&	44.2	3	S, W, N, Z	B, D, F	S	P, R	DAL, SHA, TEP
RWR89#44R8%&	44.8	3	S, W, N, Z	B, D	S	P, R	DAL, SHA, TEP
RWR89#45R3%&	45.3	3	S, W, N, Z	B, D, F	S	P, R	DAL, SHA, TEP
RWR89#45R9%&	45.9	3	S, W, N, Z	B, D	S	P, R	DAL, SHA, TEP
RWR89#46R4%&	46.4	3	S, W, N, Z	B, D, F	S	P, R	DAL, SHA, TEP
RWR89#47R0%&	47.0	3	S, W, N, Z	B, D	S	P, R	DAL, SHA, TEP
RWR89#47R5%&	47.5	3	S, W, N, Z	B, D, F	S	P, R	DAL, SHA, TEP
RWR89#48R1%&	48.1	3	S, W, N, Z	B, D	S	P, R	DAL, SHA, TEP
RWR89#48R7%&	48.7	3	S, W, N, Z	B, D, F	S	P, R	DAL, SHA, TEP
RWR89#49R3%&	49.3	3	S, W, N, Z	B, D	S	P, R	DAL, SHA, TEP
RWR89#49R9%&	49.9	3	S, W, N, Z	B, D, F	S	P, R	DAL, SHA, TEP
RWR89#50R5%&	50.5	3	S, W, N, Z	B, D	S	P, R	DAL, SHA, TEP
	Resistance	Power	Terminal	Resistance	Level 1	Level 2	
Part Number	Value (Ohms)	Rating (W)	Characteristic (#)	Tolerance (%)	(FRL)(&)	(FRL)(&)	Manufacturer

RWR89#51R1%&	51.1	3	S, W, N, Z	B, D, F	S	P, R	DAL, SHA, TEP
RWR89#51R7%&	51.7	3	S, W, N, Z	B, D	S	P, R	DAL, SHA, TEP
RWR89#52R3%&	52.3	3	S, W, N, Z	B, D, F	S	P, R	DAL, SHA, TEP
RWR89#53R0%&	53.0	3	S, W, N, Z	B, D	S	P, R	DAL, SHA, TEP
RWR89#53R6%&	53.6	3	S, W, N, Z	B, D, F	S	P, R	DAL, SHA, TEP
RWR89#54R2%&	54.2	3	S, W, N, Z	B, D	S	P, R	DAL, SHA, TEP
RWR89#54R9%&	54.9	3	S, W, N, Z	B, D, F	S	P, R	DAL, SHA, TEP
RWR89#55R6%&	55.6	3	S, W, N, Z	B, D	S	P, R	DAL, SHA, TEP
RWR89#56R2%&	56.2	3	S, W, N, Z	B, D, F	S	P, R	DAL, SHA, TEP
RWR89#56R9%&	56.9	3	S, W, N, Z	B, D	S	P, R	DAL, SHA, TEP
RWR89#57R6%&	57.6	3	S, W, N, Z	B, D, F	S	P, R	DAL, SHA, TEP
RWR89#58R3%&	58.3	3	S, W, N, Z	B, D	S	P, R	DAL, SHA, TEP
RWR89#59R0%&	59.0	3	S, W, N, Z	B, D, F	S	P, R	DAL, SHA, TEP
RWR89#59R7%&	59.7	3	S, W, N, Z	B, D	S	P, R	DAL, SHA, TEP
	Resistance	Power	Terminal	Resistance	Level 1	Level 2	
Part Number	Value (Ohms)	Rating (W)	Characteristic (#)	Tolerance (%)	(FRL)(&)	(FRL)(&)	Manufacturer
RWR89#60R4%&	60.4	3	S, W, N, Z	B, D, F	S	P, R	DAL, SHA, TEP
RWR89#61R2%&	61.2	3	S, W, N, Z	B, D	S	P, R	DAL, SHA, TEP
RWR89#61R9%&	61.9	3	S, W, N, Z	B, D, F	S	P, R	DAL, SHA, TEP
RWR89#62R6%&	62.6	3	S, W, N, Z	B, D	S	P, R	DAL, SHA, TEP
RWR89#63R4%&	63.4	3	S, W, N, Z	B, D, F	S	P, R	DAL, SHA, TEP
RWR89#64R2%&	64.2	3	S, W, N, Z	B, D	S	P, R	DAL, SHA, TEP
RWR89#64R9%&	64.9	3	S, W, N, Z	B, D, F	S	P, R	DAL, SHA, TEP
RWR89#65R7%&	65.7	3	S, W, N, Z	B, D	S	P, R	DAL, SHA, TEP
RWR89#66R5%&	66.5	3	S, W, N, Z	B, D, F	S	P, R	DAL, SHA, TEP
RWR89#67R3%&	67.3	3	S, W, N, Z	B, D	S	P, R	DAL, SHA, TEP
RWR89#68R1%&	68.1	3	S, W, N, Z	B, D, F	S	P, R	DAL, SHA, TEP
RWR89#69R0%&	69.0	3	S, W, N, Z	B, D	S	P, R	DAL, SHA, TEP
RWR89#69R8%&	69.8	3	S, W, N, Z	B, D, F	S	P, R	DAL, SHA, TEP
RWR89#70R6%&	70.6	3	S, W, N, Z	B, D	S	P, R	DAL, SHA, TEP
	Resistance	Power	Terminal	Resistance	Level 1	Level 2	
Part Number	Value (Ohms)	Rating (W)	Characteristic (#)	Tolerance (%)	(FRL)(&)	(FRL)(&)	Manufacturer
RWR89#71R5%&	71.5	3	S, W, N, Z	B, D, F	S	P, R	DAL, SHA, TEP
RWR89#72R3%&	72.3	3	S, W, N, Z	B, D	S	P, R	DAL, SHA, TEP
RWR89#73R2%&	73.2	3	S, W, N, Z	B, D, F	S	P, R	DAL, SHA, TEP
RWR89#74R1%&	74.1	3	S, W, N, Z	B, D	S	P, R	DAL, SHA, TEP
RWR89#75R0%&	75.0	3	S, W, N, Z	B, D, F	S	P, R	DAL, SHA, TEP
RWR89#75R9%&	75.9	3	S, W, N, Z	B, D	S	P, R	DAL, SHA, TEP
RWR89#76R8%&.	76.8	3	S, W, N, Z	B, D, F	S	P, R	DAL, SHA, TEP
RWR89#77R7%&.	77.7	3	S, W, N, Z	B, D	S	P, R	DAL, SHA, TEP
RWR89#78R7%&	78.7	3	S, W, N, Z	B, D, F	S	P, R	DAL, SHA, TEP
RWR89#79R6%&	79.6	3	S, W, N, Z	B, D	S	P, R	DAL, SHA, TEP
RWR89#80R6%&	80.6	3	S, W, N, Z	B, D, F	S	P, R	DAL, SHA, TEP
RWR89#81R6%&	81.6	3	S, W, N, Z	B, D	S	P, R	DAL, SHA, TEP
	Resistance	Power	Terminal	Resistance	Level 1	Level 2	
Part Number	Value (Ohms)	Rating (W)	Characteristic (#)	Tolerance (%)	(FRL)(&)	(FRL)(&)	Manufacturer
RWR89#82R5%&	82.5	3	S, W, N, Z	B, D, F	S	P, R	DAL, SHA, TEP

RWR89#83R5%&	83.5	3	S, W, N, Z	B, D	S	P, R	DAL, SHA, TEP
RWR89#84R5%&	84.5	3	S, W, N, Z	B, D, F	S	P, R	DAL, SHA, TEP
RWR89#85R6%&	85.6	3	S, W, N, Z	B, D	S	P, R	DAL, SHA, TEP
RWR89#86R6%&	86.6	3	S, W, N, Z	B, D, F	S	P, R	DAL, SHA, TEP
RWR89#87R6%&	87.6	3	S, W, N, Z	B, D	S	P, R	DAL, SHA, TEP
RWR89#88R7%&	88.7	3	S, W, N, Z	B, D, F	S	P, R	DAL, SHA, TEP
RWR89#89R8%&	89.8	3	S, W, N, Z	B, D	S	P, R	DAL, SHA, TEP
RWR89#90R9%&	90.9	3	S, W, N, Z	B, D, F	S	P, R	DAL, SHA, TEP
RWR89#92R0%&	92.0	3	S, W, N, Z	B, D	S	P, R	DAL, SHA, TEP
RWR89#93R1%&	93.1	3	S, W, N, Z	B, D, F	S	P, R	DAL, SHA, TEP
RWR89#94R2%&	94.2	3	S, W, N, Z	B, D	S	P, R	DAL, SHA, TEP
RWR89#95R3%&	95.3	3	S, W, N, Z	B, D, F	S	P, R	DAL, SHA, TEP
RWR89#96R5%&	96.5	3	S, W, N, Z	B, D	S	P, R	DAL, SHA, TEP
RWR89#97R6%&	97.6	3	S, W, N, Z	B, D, F	S	P, R	DAL, SHA, TEP
RWR89#98R8%&	98.8	3	S, W, N, Z	B, D	S	P, R	DAL, SHA, TEP
	Resistance	Power	Terminal	Resistance	Level 1	Level 2	
Part Number	Value (Ohms)	Rating (W)	Characteristic (#)	Tolerance (%)	(FRL)(&)	(FRL)(&)	Manufacturer

RWR89 Wirewound Resistors: 100 Ohms through 988 Ohms

	Resistance	Power	Terminal	Resistance	Level 1	Level 2	
Part Number	Value (Ohms)	Rating (W)	Characteristic (#)	Tolerance (%)	(FRL)(&)	(FRL)(&)	Manufacturer
RWR89#1000%&	100	3	S, W, N, Z	B, D, F	S	P, R	DAL, SHA, TEP
RWR89#1010%&	101	3	S, W, N, Z	B, D	S	P, R	DAL, SHA, TEP
RWR89#1020%&	102	3	S, W, N, Z	B, D, F	S	P, R	DAL, SHA, TEP
RWR89#1040%&	104	3	S, W, N, Z	B, D	S	P, R	DAL, SHA, TEP
RWR89#1050%&	105	3	S, W, N, Z	B, D, F	S	P, R	DAL, SHA, TEP
RWR89#1060%&	106	3	S, W, N, Z	B, D	S	P, R	DAL, SHA, TEP
RWR89#1070%&	107	3	S, W, N, Z	B, D, F	S	P, R	DAL, SHA, TEP
RWR89#1090%&	109	3	S, W, N, Z	B, D	S	P, R	DAL, SHA, TEP
RWR89#1100%&	110	3	S, W, N, Z	B, D, F	S	P, R	DAL, SHA, TEP
RWR89#1110%&	111	3	S, W, N, Z	B, D	S	P, R	DAL, SHA, TEP
RWR89#1130%&	113	3	S, W, N, Z	B, D, F	S	P, R	DAL, SHA, TEP
RWR89#1140%&	114	3	S, W, N, Z	B, D	S	P, R	DAL, SHA, TEP
RWR89#1150%&	115	3	S, W, N, Z	B, D, F	S	P, R	DAL, SHA, TEP
RWR89#1170%&	117	3	S, W, N, Z	B, D	S	P, R	DAL, SHA, TEP
	Resistance	Power	Terminal	Resistance	Level 1	Level 2	
Part Number	Value (Ohms)	Rating (W)	Characteristic (#)	Tolerance (%)	(FRL)(&)	(FRL)(&)	Manufacturer
	Resistance	Power	Terminal	Resistance	Level 1	Level 2	
Part Number	Value (Ohms)	Rating (W)	Characteristic (#)	Tolerance (%)	(FRL)(&)	(FRL)(&)	Manufacturer
RWR89#1180%&	118	3	S, W, N, Z	B, D, F	S	P, R	DAL, SHA, TEP
RWR89#1200%&	120	3	S, W, N, Z	B, D	S	P, R	DAL, SHA, TEP
RWR89#1210%&	121	3	S, W, N, Z	B, D, F	S	P, R	DAL, SHA, TEP
RWR89#1230%&	123	3	S, W, N, Z	B, D	S	P, R	DAL, SHA, TEP
RWR89#1240%&	124	3	S, W, N, Z	B, D, F	S	P, R	DAL, SHA, TEP

RWR89#1260%&	126	3	S, W, N, Z	B, D	S	P, R	DAL, SHA, TEP
RWR89#1270%&	127	3	S, W, N, Z	B, D, F	S	P, R	DAL, SHA, TEP
RWR89#1290%&	129	3	S, W, N, Z	B, D	S	P, R	DAL, SHA, TEP
RWR89#1300%&	130	3	S, W, N, Z	B, D, F	S	P, R	DAL, SHA, TEP
RWR89#1320%&	132	3	S, W, N, Z	B, D	S	P, R	DAL, SHA, TEP
RWR89#1330%&	133	3	S, W, N, Z	B, D, F	S	P, R	DAL, SHA, TEP
RWR89#1350%&	135	3	S, W, N, Z	B, D	S	P, R	DAL, SHA, TEP
RWR89#1370%&	137	3	S, W, N, Z	B, D, F	S	P, R	DAL, SHA, TEP
RWR89#1380%&	138	3	S, W, N, Z	B, D	S	P, R	DAL, SHA, TEP
	Resistance	Power	Terminal	Resistance	Level 1	Level 2	
Part Number	Value (Ohms)	Rating (W)	Characteristic (#)	Tolerance (%)	(FRL)(&)	(FRL)(&)	Manufacturer
RWR89#1400%&	140	3	S, W, N, Z	B, D, F	S	P, R	DAL, SHA, TEP
RWR89#1420%&	142	3	S, W, N, Z	B, D	S	P, R	DAL, SHA, TEP
RWR89#1430%&	143	3	S, W, N, Z	B, D, F	S	P, R	DAL, SHA, TEP
RWR89#1450%&	145	3	S, W, N, Z	B, D	S	P, R	DAL, SHA, TEP
RWR89#1470%&	147	3	S, W, N, Z	B, D, F	S	P, R	DAL, SHA, TEP
RWR89#1490%&	149	3	S, W, N, Z	B, D	S	P, R	DAL, SHA, TEP
RWR89#1500%&	150	3	S, W, N, Z	B, D, F	S	P, R	DAL, SHA, TEP
RWR89#1520%&	152	3	S, W, N, Z	B, D	S	P, R	DAL, SHA, TEP
RWR89#1540%&	154	3	S, W, N, Z	B, D, F	S	P, R	DAL, SHA, TEP
RWR89#1560%&	156	3	S, W, N, Z	B, D	S	P, R	DAL, SHA, TEP
RWR89#1580%&	158	3	S, W, N, Z	B, D, F	S	P, R	DAL, SHA, TEP
RWR89#1600%&	160	3	S, W, N, Z	B, D	S	P, R	DAL, SHA, TEP
RWR89#1620%&	162	3	S, W, N, Z	B, D, F	S	P, R	DAL, SHA, TEP
RWR89#1640%&	164	3	S, W, N, Z	B, D	S	P, R	DAL, SHA, TEP
	Resistance	Power	Terminal	Resistance	Level 1	Level 2	
Part Number	Value (Ohms)	Rating (W)	Characteristic (#)	Tolerance (%)	(FRL)(&)	(FRL)(&)	Manufacturer
RWR89#1650%&	165	3	S, W, N, Z	B, D, F	S	P, R	DAL, SHA, TEP
RWR89#1670%&	167	3	S, W, N, Z	B, D	S	P, R	DAL, SHA, TEP
RWR89#1690%&	169	3	S, W, N, Z	B, D, F	S	P, R	DAL, SHA, TEP
RWR89#1720%&	172	3	S, W, N, Z	B, D	S	P, R	DAL, SHA, TEP
RWR89#1740%&	174	3	S, W, N, Z	B, D, F	S	P, R	DAL, SHA, TEP
RWR89#1760%&	176	3	S, W, N, Z	B, D	S	P, R	DAL, SHA, TEP
RWR89#1780%&	178	3	S, W, N, Z	B, D, F	S	P, R	DAL, SHA, TEP
RWR89#1800%&	180	3	S, W, N, Z	B, D, F	S	P, R	DAL, SHA, TEP
RWR89#1820%&	182	3	S, W, N, Z	B, D, F	S	P, R	DAL, SHA, TEP
RWR89#1840%&	184	3	S, W, N, Z	B, D	S	P, R	DAL, SHA, TEP
RWR89#1870%&	187	3	S, W, N, Z	B, D, F	S	P, R	DAL, SHA, TEP
RWR89#1890%&	189	3	S, W, N, Z	B, D	S	P, R	DAL, SHA, TEP
	Resistance	Power	Terminal	Resistance	Level 1	Level 2	
Part Number	Value (Ohms)	Rating (W)	Characteristic (#)	Tolerance (%)	(FRL)(&)	(FRL)(&)	Manufacturer
RWR89#1910%&	191	3	S, W, N, Z	B, D, F	S	P, R	DAL, SHA, TEP
RWR89#1930%&	193	3	S, W, N, Z	B, D	S	P, R	DAL, SHA, TEP
RWR89#1960%&	196	3	S, W, N, Z	B, D, F	S	P, R	DAL, SHA, TEP
RWR89#1980%&	198	3	S, W, N, Z	B, D	S	P, R	DAL, SHA, TEP
RWR89#2000%&	200	3	S, W, N, Z	B, D, F	S	P, R	DAL, SHA, TEP
RWR89#2030%&	203	3	S, W, N, Z	B, D	S	P, R	DAL, SHA, TEP

RWR89#2050%&	205	3	S, W, N, Z	B, D, F	S	P, R	DAL, SHA, TEP
RWR89#2080%&	208	3	S, W, N, Z	B, D	S	P, R	DAL, SHA, TEP
RWR89#2100%&	210	3	S, W, N, Z	B, D, F	S	P, R	DAL, SHA, TEP
RWR89#2130%&	213	3	S, W, N, Z	B, D	S	P, R	DAL, SHA, TEP
RWR89#2150%&	215	3	S, W, N, Z	B, D, F	S	P, R	DAL, SHA, TEP
RWR89#2180%&	218	3	S, W, N, Z	B, D	S	P, R	DAL, SHA, TEP
RWR89#2210%&	221	3	S, W, N, Z	B, D, F	S	P, R	DAL, SHA, TEP
RWR89#2230%&	223	3	S, W, N, Z	B, D	S	P, R	DAL, SHA, TEP
	Resistance	Power	Terminal	Resistance	Level 1	Level 2	
Part Number	Value (Ohms)	Rating (W)	Characteristic (#)	Tolerance (%)	(FRL)(&)	(FRL)(&)	Manufacturer
RWR89#2260%&	226	3	S, W, N, Z	B, D, F	S	P, R	DAL, SHA, TEP
RWR89#2290%&	229	3	S, W, N, Z	B, D	S	P, R	DAL, SHA, TEP
RWR89#2320%&	232	3	S, W, N, Z	B, D, F	S	P, R	DAL, SHA, TEP
RWR89#2340%&	234	3	S, W, N, Z	B, D	S	P, R	DAL, SHA, TEP
RWR89#2370%&	237	3	S, W, N, Z	B, D, F	S	P, R	DAL, SHA, TEP
RWR89#2400%&	240	3	S, W, N, Z	B, D	S	P, R	DAL, SHA, TEP
RWR89#2430%&	243	3	S, W, N, Z	B, D, F	S	P, R	DAL, SHA, TEP
RWR89#2460%&	246	3	S, W, N, Z	B, D	S	P, R	DAL, SHA, TEP
RWR89#2490%&	249	3	S, W, N, Z	B, D, F	S	P, R	DAL, SHA, TEP
RWR89#2520%&	252	3	S, W, N, Z	B, D	S	P, R	DAL, SHA, TEP
RWR89#2550%&	255	3	S, W, N, Z	B, D, F	S	P, R	DAL, SHA, TEP
RWR89#2580%&	258	3	S, W, N, Z	B, D	S	P, R	DAL, SHA, TEP
RWR89#2610%&	261	3	S, W, N, Z	B, D, F	S	P, R	DAL, SHA, TEP
RWR89#2640%&	264	3	S, W, N, Z	B, D	S	P, R	DAL, SHA, TEP
	Resistance	Power	Terminal	Resistance	Level 1	Level 2	
Part Number	Value (Ohms)	Rating (W)	Characteristic (#)	Tolerance (%)	(FRL)(&)	(FRL)(&)	Manufacturer
RWR89#2670%&	267	3	S, W, N, Z	B, D, F	S	P, R	DAL, SHA, TEP
RWR89#2710%&	271	3	S, W, N, Z	B, D	S	P, R	DAL, SHA, TEP
RWR89#2740%&	274	3	S, W, N, Z	B, D, F	S	P, R	DAL, SHA, TEP
RWR89#2770%&	277	3	S, W, N, Z	B, D	S	P, R	DAL, SHA, TEP
RWR89#2800%&	280	3	S, W, N, Z	B, D, F	S	P, R	DAL, SHA, TEP
RWR89#2840%&	284	3	S, W, N, Z	B, D	S	P, R	DAL, SHA, TEP
RWR89#2870%&	287	3	S, W, N, Z	B, D, F	S	P, R	DAL, SHA, TEP
RWR89#2910%&	291	3	S, W, N, Z	B, D	S	P, R	DAL, SHA, TEP
RWR89#2940%&	294	3	S, W, N, Z	B, D, F	S	P, R	DAL, SHA, TEP
RWR89#2980%&	298	3	S, W, N, Z	B, D	S	P, R	DAL, SHA, TEP
RWR89#3010%&	301	3	S, W, N, Z	B, D, F	S	P, R	DAL, SHA, TEP
RWR89#3050%&	305	3	S, W, N, Z	B, D	S	P, R	DAL, SHA, TEP
RWR89#3090%&	309	3	S, W, N, Z	B, D, F	S	P, R	DAL, SHA, TEP
RWR89#3120%&	312	3	S, W, N, Z	B, D	S	P, R	DAL, SHA, TEP
	Resistance	Power	Terminal	Resistance	Level 1	Level 2	
Part Number	Value (Ohms)	Rating (W)	Characteristic (#)	Tolerance (%)	(FRL)(&)	(FRL)(&)	Manufacturer
RWR89#3160%&	316	3	S, W, N, Z	B, D, F	S	P, R	DAL, SHA, TEP
RWR89#3200%&	320	3	S, W, N, Z	B, D	S	P, R	DAL, SHA, TEP
RWR89#3240%&	324	3	S, W, N, Z	B, D, F	S	P, R	DAL, SHA, TEP
RWR89#3280%&	328	3	S, W, N, Z	B, D	S	P, R	DAL, SHA, TEP
RWR89#3320%&	332	3	S, W, N, Z	B, D, F	S	P, R	DAL, SHA, TEP

RWR89#3360%&	336	3	S, W, N, Z	B, D	S	P, R	DAL, SHA, TEP
RWR89#3400%&	340	3	S, W, N, Z	B, D, F	S	P, R	DAL, SHA, TEP
RWR89#3440%&	344	3	S, W, N, Z	B, D	S	P, R	DAL, SHA, TEP
RWR89#3480%&	348	3	S, W, N, Z	B, D, F	S	P, R	DAL, SHA, TEP
RWR89#3520%&	352	3	S, W, N, Z	B, D	S	P, R	DAL, SHA, TEP
RWR89#3570%&	357	3	S, W, N, Z	B, D, F	S	P, R	DAL, SHA, TEP
RWR89#3610%&	361	3	S, W, N, Z	B, D	S	P, R	DAL, SHA, TEP
RWR89#3650%&	365	3	S, W, N, Z	B, D, F	S	P, R	DAL, SHA, TEP
RWR89#3700%&	370	3	S, W, N, Z	B, D	S	P, R	DAL, SHA, TEP
	Resistance	Power	Terminal	Resistance	Level 1	Level 2	
Part Number	Value (Ohms)	Rating (W)	Characteristic (#)	Tolerance (%)	(FRL)(&)	(FRL)(&)	Manufacturer
RWR89#3740%&	374	3	S, W, N, Z	B, D, F	S	P, R	DAL, SHA, TEP
RWR89#3790%&	379	3	S, W, N, Z	B, D	S	P, R	DAL, SHA, TEP
RWR89#3830%&	383	3	S, W, N, Z	B, D, F	S	P, R	DAL, SHA, TEP
RWR89#3880%&	388	3	S, W, N, Z	B, D	S	P, R	DAL, SHA, TEP
RWR89#3920%&	392	3	S, W, N, Z	B, D, F	S	P, R	DAL, SHA, TEP
RWR89#3970%&	397	3	S, W, N, Z	B, D	S	P, R	DAL, SHA, TEP
RWR89#4020%&	402	3	S, W, N, Z	B, D, F	S	P, R	DAL, SHA, TEP
RWR89#4070%&	407	3	S, W, N, Z	B, D	S	P, R	DAL, SHA, TEP
RWR89#4120%&	412	3	S, W, N, Z	B, D, F	S	P, R	DAL, SHA, TEP
RWR89#4170%&	417	3	S, W, N, Z	B, D	S	P, R	DAL, SHA, TEP
RWR89#4220%&	422	3	S, W, N, Z	B, D, F	S	P, R	DAL, SHA, TEP
RWR89#4270%&	427	3	S, W, N, Z	B, D	S	P, R	DAL, SHA, TEP
RWR89#4320%&	432	3	S, W, N, Z	B, D, F	S	P, R	DAL, SHA, TEP
RWR89#4370%&	437	3	S, W, N, Z	B, D	S	P, R	DAL, SHA, TEP
	Resistance	Power	Terminal	Resistance	Level 1	Level 2	
Part Number	Value (Ohms)	Rating (W)	Characteristic (#)	Tolerance (%)	(FRL)(&)	(FRL)(&)	Manufacturer
RWR89#4420%&	442	3	S, W, N, Z	B, D, F	S	P, R	DAL, SHA, TEP
RWR89#4480%&	448	3	S, W, N, Z	B, D	S	P, R	DAL, SHA, TEP
RWR89#4530%&	453	3	S, W, N, Z	B, D, F	S	P, R	DAL, SHA, TEP
RWR89#4590%&	459	3	S, W, N, Z	B, D	S	P, R	DAL, SHA, TEP
RWR89#4640%&	464	3	S, W, N, Z	B, D, F	S	P, R	DAL, SHA, TEP
RWR89#4700%&	470	3	S, W, N, Z	B, D	S	P, R	DAL, SHA, TEP
RWR89#4750%&	475	3	S, W, N, Z	B, D, F	S	P, R	DAL, SHA, TEP
RWR89#4810%&	481	3	S, W, N, Z	B, D	S	P, R	DAL, SHA, TEP
RWR89#4870%&	487	3	S, W, N, Z	B, D, F	S	P, R	DAL, SHA, TEP
RWR89#4930%&	493	3	S, W, N, Z	B, D	S	P, R	DAL, SHA, TEP
RWR89#4990%&	499	3	S, W, N, Z	B, D, F	S	P, R	DAL, SHA, TEP
RWR89#5050%&	505	3	S, W, N, Z	B, D	S	P, R	DAL, SHA, TEP
	Resistance	Power	Terminal	Resistance	Level 1	Level 2	
Part Number	Value (Ohms)	Rating (W)	Characteristic (#)	Tolerance (%)	(FRL)(&)	(FRL)(&)	Manufacturer
RWR89#5110%&	511	3	S, W, N, Z	B, D, F	S	P, R	DAL, SHA, TEP
RWR89#5170%&	517	3	S, W, N, Z	B, D	S	P, R	DAL, SHA, TEP
RWR89#5230%&	523	3	S, W, N, Z	B, D, F	S	P, R	DAL, SHA, TEP
RWR89#5300%&	530	3	S, W, N, Z	B, D	S	P, R	DAL, SHA, TEP
RWR89#5360%&	536	3	S, W, N, Z	B, D, F	S	P, R	DAL, SHA, TEP
RWR89#5420%&	542	3	S, W, N, Z	B, D	S	P, R	DAL, SHA, TEP

RWR89#5490%&	549	3	S, W, N, Z	B, D, F	S	P, R	DAL, SHA, TEP
RWR89#5560%&	556	3	S, W, N, Z	B, D	S	P, R	DAL, SHA, TEP
RWR89#5620%&	562	3	S, W, N, Z	B, D, F	S	P, R	DAL, SHA, TEP
RWR89#5690%&	569	3	S, W, N, Z	B, D	S	P, R	DAL, SHA, TEP
RWR89#5760%&	576	3	S, W, N, Z	B, D, F	S	P, R	DAL, SHA, TEP
RWR89#5830%&	583	3	S, W, N, Z	B, D	S	P, R	DAL, SHA, TEP
RWR89#5900%&	590	3	S, W, N, Z	B, D, F	S	P, R	DAL, SHA, TEP
RWR89#5970%&	597	3	S, W, N, Z	B, D	S	P, R	DAL, SHA, TEP
	Resistance	Power	Terminal	Resistance	Level 1	Level 2	
Part Number	Value (Ohms)	Rating (W)	Characteristic (#)	Tolerance (%)	(FRL)(&)	(FRL)(&)	Manufacturer
RWR89#6040%&	604	3	S, W, N, Z	B, D, F	S	P, R	DAL, SHA, TEP
RWR89#6120%&	612	3	S, W, N, Z	B, D	S	P, R	DAL, SHA, TEP
RWR89#6190%&	619	3	S, W, N, Z	B, D, F	S	P, R	DAL, SHA, TEP
RWR89#6260%&	626	3	S, W, N, Z	B, D	S	P, R	DAL, SHA, TEP
RWR89#6340%&	634	3	S, W, N, Z	B, D, F	S	P, R	DAL, SHA, TEP
RWR89#6420%&	642	3	S, W, N, Z	B, D	S	P, R	DAL, SHA, TEP
RWR89#6490%&	649	3	S, W, N, Z	B, D, F	S	P, R	DAL, SHA, TEP
RWR89#6570%&	657	3	S, W, N, Z	B, D	S	P, R	DAL, SHA, TEP
RWR89#6650%&	665	3	S, W, N, Z	B, D, F	S	P, R	DAL, SHA, TEP
RWR89#6730%&	673	3	S, W, N, Z	B, D	S	P, R	DAL, SHA, TEP
RWR89#6810%&	681	3	S, W, N, Z	B, D, F	S	P, R	DAL, SHA, TEP
RWR89#6900%&	690	3	S, W, N, Z	B, D	S	P, R	DAL, SHA, TEP
RWR89#6980%&	698	3	S, W, N, Z	B, D, F	S	P, R	DAL, SHA, TEP
RWR89#7060%&	706	3	S, W, N, Z	B, D	S	P, R	DAL, SHA, TEP
	Resistance	Power	Terminal	Resistance	Level 1	Level 2	
Part Number	Value (Ohms)	Rating (W)	Characteristic (#)	Tolerance (%)	(FRL)(&)	(FRL)(&)	Manufacturer
RWR89#7150%&	715	3	S, W, N, Z	B, D, F	S	P, R	DAL, SHA, TEP
RWR89#7230%&	723	3	S, W, N, Z	B, D	S	P, R	DAL, SHA, TEP
RWR89#7320%&	732	3	S, W, N, Z	B, D, F	S	P, R	DAL, SHA, TEP
RWR89#7410%&	741	3	S, W, N, Z	B, D	S	P, R	DAL, SHA, TEP
RWR89#7500%&	750	3	S, W, N, Z	B, D, F	S	P, R	DAL, SHA, TEP
RWR89#7590%&	759	3	S, W, N, Z	B, D	S	P, R	DAL, SHA, TEP
RWR89#7680%&	768	3	S, W, N, Z	B, D, F	S	P, R	DAL, SHA, TEP
RWR89#7770%&	777	3	S, W, N, Z	B, D	S	P, R	DAL, SHA, TEP
RWR89#7870%&	787	3	S, W, N, Z	B, D, F	S	P, R	DAL, SHA, TEP
RWR89#7960%&	796	3	S, W, N, Z	B, D	S	P, R	DAL, SHA, TEP
RWR89#8060%&	806	3	S, W, N, Z	B, D, F	S	P, R	DAL, SHA, TEP
RWR89#8160%&	816	3	S, W, N, Z	B, D	S	P, R	DAL, SHA, TEP
RWR89#8250%&	825	3	S, W, N, Z	B, D, F	S	P, R	DAL, SHA, TEP
RWR89#8350%&	835	3	S, W, N, Z	B, D	S	P, R	DAL, SHA, TEP
	Resistance	Power	Terminal	Resistance	Level 1	Level 2	
Part Number	Value (Ohms)	Rating (W)	Characteristic (#)	Tolerance (%)	(FRL)(&)	(FRL)(&)	Manufacturer
RWR89#8450%&	845	3	S, W, N, Z	B, D, F	S	P, R	DAL, SHA, TEP
RWR89#8560%&	856	3	S, W, N, Z	B, D	S	P, R	DAL, SHA, TEP
RWR89#8660%&	866	3	S, W, N, Z	B, D, F	S	P, R	DAL, SHA, TEP
RWR89#8760%&	876	3	S, W, N, Z	B, D	S	P, R	DAL, SHA, TEP
RWR89#8870%&	887	3	S, W, N, Z	B, D, F	S	P, R	DAL, SHA, TEP

RWR89#8980%&	898	3	S, W, N, Z	B, D	S	P, R	DAL, SHA, TEP
RWR89#9090%&	909	3	S, W, N, Z	B, D, F	S	P, R	DAL, SHA, TEP
RWR89#9200%&	920	3	S, W, N, Z	B, D	S	P, R	DAL, SHA, TEP
RWR89#9310%&	931	3	S, W, N, Z	B, D, F	S	P, R	DAL, SHA, TEP
RWR89#9420%&	942	3	S, W, N, Z	B, D	S	P, R	DAL, SHA, TEP
RWR89#9530%&	953	3	S, W, N, Z	B, D, F	S	P, R	DAL, SHA, TEP
RWR89#9650%&	965	3	S, W, N, Z	B, D	S	P, R	DAL, SHA, TEP
RWR89#9760%&	976	3	S, W, N, Z	B, D, F	S	P, R	DAL, SHA, TEP
RWR89#9880%&	988	3	S, W, N, Z	B, D	S	P, R	DAL, SHA, TEP
	Resistance	Power	Terminal	Resistance	Level 1	Level 2	
Part Number	Value (Ohms)	Rating (W)	Characteristic (#)	Tolerance (%)	(FRL)(&)	(FRL)(&)	Manufacturer

RWR89 Wirewound Resistors: 1000 Ohms through 3570 Ohms

	Resistance	Power	Terminal	Resistance	Level 1	Level 2	
Part Number	Value (Ohms)	Rating (W)	Characteristic (#)	Tolerance (%)	(FRL)(&)	(FRL)(&)	Manufacturer
RWR89#1001%&	1000	3	S, W, N, Z	B, D, F	S	P, R	DAL, SHA, TEP
RWR89#1011%&	1010	3	S, W, N, Z	B, D	S	P, R	DAL, SHA, TEP
RWR89#1021%&	1020	3	S, W, N, Z	B, D, F	S	P, R	DAL, SHA, TEP
RWR89#1041%&	1040	3	S, W, N, Z	B, D	S	P, R	DAL, SHA, TEP
RWR89#1051%&	1050	3	S, W, N, Z	B, D, F	S	P, R	DAL, SHA, TEP
RWR89#1061%&	1060	3	S, W, N, Z	B, D	S	P, R	DAL, SHA, TEP
RWR89#1071%&	1070	3	S, W, N, Z	B, D, F	S	P, R	DAL, SHA, TEP
RWR89#1091%&	1090	3	S, W, N, Z	B, D	S	P, R	DAL, SHA, TEP
RWR89#1101%&	1100	3	S, W, N, Z	B, D, F	S	P, R	DAL, SHA, TEP
RWR89#1111%&	1110	3	S, W, N, Z	B, D	S	P, R	DAL, SHA, TEP
RWR89#1131%&	1130	3	S, W, N, Z	B, D, F	S	P, R	DAL, SHA, TEP
RWR89#1141%&	1140	3	S, W, N, Z	B, D	S	P, R	DAL, SHA, TEP
RWR89#1151%&	1150	3	S, W, N, Z	B, D, F	S	P, R	DAL, SHA, TEP
RWR89#1171%&	1170	3	S, W, N, Z	B, D	S	P, R	DAL, SHA, TEP
	Resistance	Power	Terminal	Resistance	Level 1	Level 2	
Part Number	Value (Ohms)	Rating (W)	Characteristic (#)	Tolerance (%)	(FRL)(&)	(FRL)(&)	Manufacturer
	Resistance	Power	Terminal	Resistance	Level 1	Level 2	
Part Number	Value (Ohms)	Rating (W)	Characteristic (#)	Tolerance (%)	(FRL)(&)	(FRL)(&)	Manufacturer
RWR89#1181%&	1180	3	S, W, N, Z	B, D, F	S	P, R	DAL, SHA, TEP
RWR89#1201%&	1200	3	S, W, N, Z	B, D	S	P, R	DAL, SHA, TEP
RWR89#1211%&	1210	3	S, W, N, Z	B, D, F	S	P, R	DAL, SHA, TEP
RWR89#1231%&	1230	3	S, W, N, Z	B, D	S	P, R	DAL, SHA, TEP
RWR89#1241%&	1240	3	S, W, N, Z	B, D, F	S	P, R	DAL, SHA, TEP
RWR89#1261%&	1260	3	S, W, N, Z	B, D	S	P, R	DAL, SHA, TEP
RWR89#1271%&	1270	3	S, W, N, Z	B, D, F	S	P, R	DAL, SHA, TEP
RWR89#1291%&	1290	3	S, W, N, Z	B, D	S	P, R	DAL, SHA, TEP
RWR89#1301%&	1300	3	S, W, N, Z	B, D, F	S	P, R	DAL, SHA, TEP
RWR89#1321%&	1320	3	S, W, N, Z	B, D	S	P, R	DAL, SHA, TEP
RWR89#1331%&	1330	3	S, W, N, Z	B, D, F	S	P, R	DAL, SHA, TEP

RWR89#1351%&	1350	3	S, W, N, Z	B, D	S	P, R	DAL, SHA, TEP
RWR89#1371%&	1370	3	S, W, N, Z	B, D, F	S	P, R	DAL, SHA, TEP
RWR89#1381%&	1380	3	S, W, N, Z	B, D	S	P, R	DAL, SHA, TEP
	Resistance	Power	Terminal	Resistance	Level 1	Level 2	
Part Number	Value (Ohms)	Rating (W)	Characteristic (#)	Tolerance (%)	(FRL)(&)	(FRL)(&)	Manufacturer
RWR89#1401%&	1400	3	S, W, N, Z	B, D, F	S	P, R	DAL, SHA, TEP
RWR89#1421%&	1420	3	S, W, N, Z	B, D	S	P, R	DAL, SHA, TEP
RWR89#1431%&	1430	3	S, W, N, Z	B, D, F	S	P, R	DAL, SHA, TEP
RWR89#1451%&	1450	3	S, W, N, Z	B, D	S	P, R	DAL, SHA, TEP
RWR89#1471%&	1470	3	S, W, N, Z	B, D, F	S	P, R	DAL, SHA, TEP
RWR89#1491%&	1490	3	S, W, N, Z	B, D	S	P, R	DAL, SHA, TEP
RWR89#1501%&	1500	3	S, W, N, Z	B, D, F	S	P, R	DAL, SHA, TEP
RWR89#1521%&	1520	3	S, W, N, Z	B, D	S	P, R	DAL, SHA, TEP
RWR89#1541%&	1540	3	S, W, N, Z	B, D, F	S	P, R	DAL, SHA, TEP
RWR89#1561%&	1560	3	S, W, N, Z	B, D	S	P, R	DAL, SHA, TEP
RWR89#1581%&	1580	3	S, W, N, Z	B, D, F	S	P, R	DAL, SHA, TEP
RWR89#1601%&	1600	3	S, W, N, Z	B, D	S	P, R	DAL, SHA, TEP
RWR89#1621%&	1620	3	S, W, N, Z	B, D, F	S	P, R	DAL, SHA, TEP
RWR89#1641%&	1640	3	S, W, N, Z	B, D	S	P, R	DAL, SHA, TEP
	Resistance	Power	Terminal	Resistance	Level 1	Level 2	
Part Number	Value (Ohms)	Rating (W)	Characteristic (#)	Tolerance (%)	(FRL)(&)	(FRL)(&)	Manufacturer
RWR89#1651%&	1650	3	S, W, N, Z	B, D, F	S	P, R	DAL, SHA, TEP
RWR89#1671%&	1670	3	S, W, N, Z	B, D	S	P, R	DAL, SHA, TEP
RWR89#1691%&	1690	3	S, W, N, Z	B, D, F	S	P, R	DAL, SHA, TEP
RWR89#1721%&	1720	3	S, W, N, Z	B, D	S	P, R	DAL, SHA, TEP
RWR89#1741%&	1740	3	S, W, N, Z	B, D, F	S	P, R	DAL, SHA, TEP
RWR89#1761%&	1760	3	S, W, N, Z	B, D	S	P, R	DAL, SHA, TEP
RWR89#1781%&	1780	3	S, W, N, Z	B, D, F	S	P, R	DAL, SHA, TEP
RWR89#1801%&	1800	3	S, W	B, D, F	S	P, R	DAL, SHA, TEP
RWR89#1821%&	1820	3	S, W	B, D, F	S	P, R	DAL, SHA, TEP
RWR89#1841%&	1840	3	S, W	B, D	S	P, R	DAL, SHA, TEP
RWR89#1871%&	1870	3	S, W	B, D, F	S	P, R	DAL, SHA, TEP
RWR89#1891%&	1890	3	S, W	B, D	S	P, R	DAL, SHA, TEP
	Resistance	Power	Terminal	Resistance	Level 1	Level 2	
Part Number	Value (Ohms)	Rating (W)	Characteristic (#)	Tolerance (%)	(FRL)(&)	(FRL)(&)	Manufacturer
RWR89#1911%&	1910	3	S, W	B, D, F	S	P, R	DAL, SHA, TEP
RWR89#1931%&	1930	3	S, W	B, D	S	P, R	DAL, SHA, TEP
RWR89#1961%&	1960	3	S, W	B, D, F	S	P, R	DAL, SHA, TEP
RWR89#1981%&	1980	3	S, W	B, D	S	P, R	DAL, SHA, TEP
RWR89#2001%&	2000	3	S, W	B, D, F	S	P, R	DAL, SHA, TEP
RWR89#2031%&	2030	3	S, W	B, D	S	P, R	DAL, SHA, TEP
RWR89#2051%&	2050	3	S, W	B, D, F	S	P, R	DAL, SHA, TEP
RWR89#2081%&	2080	3	S, W	B, D	S	P, R	DAL, SHA, TEP
RWR89#2101%&	2100	3	S, W	B, D, F	S	P, R	DAL, SHA, TEP
RWR89#2131%&	2130	3	S, W	B, D	S	P, R	DAL, SHA, TEP
RWR89#2151%&	2150	3	S, W	B, D, F	S	P, R	DAL, SHA, TEP
RWR89#2181%&	2180	3	S, W	B, D	S	P, R	DAL, SHA, TEP

RWR89#2211%&	2210	3	S, W	B, D, F	S	P, R	DAL, SHA, TEP
RWR89#2231%&	2230	3	S, W	B, D	S	P, R	DAL, SHA, TEP
	Resistance	Power	Terminal	Resistance	Level 1	Level 2	
Part Number	Value (Ohms)	Rating (W)	Characteristic (#)	Tolerance (%)	(FRL)(&)	(FRL)(&)	Manufacturer
RWR89#2261%&	2260	3	S, W	B, D, F	S	P, R	DAL, SHA, TEP
RWR89#2291%&	2290	3	S, W	B, D	S	P, R	DAL, SHA, TEP
RWR89#2321%&	2320	3	S, W	B, D, F	S	P, R	DAL, SHA, TEP
RWR89#2341%&	2340	3	S, W	B, D	S	P, R	DAL, SHA, TEP
RWR89#2371%&	2370	3	S, W	B, D, F	S	P, R	DAL, SHA, TEP
RWR89#2401%&	2400	3	S, W	B, D	S	P, R	DAL, SHA, TEP
RWR89#2431%&	2430	3	S, W	B, D, F	S	P, R	DAL, SHA, TEP
RWR89#2461%&	2460	3	S, W	B, D	S	P, R	DAL, SHA, TEP
RWR89#2491%&	2490	3	S, W	B, D, F	S	P, R	DAL, SHA, TEP
RWR89#2521%&	2520	3	S, W	B, D	S	P, R	DAL, SHA, TEP
RWR89#2551%&	2550	3	S, W	B, D, F	S	P, R	DAL, SHA, TEP
RWR89#2581%&	2580	3	S, W	B, D	S	P, R	DAL, SHA, TEP
RWR89#2611%&	2610	3	S, W	B, D, F	S	P, R	DAL, SHA, TEP
RWR89#2641%&	2640	3	S, W	B, D	S	P, R	DAL, SHA, TEP
	Resistance	Power	Terminal	Resistance	Level 1	Level 2	
Part Number	Value (Ohms)	Rating (W)	Characteristic (#)	Tolerance (%)	(FRL)(&)	(FRL)(&)	Manufacturer
RWR89#2671%&	2670	3	S, W	B, D, F	S	P, R	DAL, SHA, TEP
RWR89#2711%&	2710	3	S, W	B, D	S	P, R	DAL, SHA, TEP
RWR89#2741%&	2740	3	S, W	B, D, F	S	P, R	DAL, SHA, TEP
RWR89#2771%&	2770	3	S, W	B, D	S	P, R	DAL, SHA, TEP
RWR89#2801%&	2800	3	S, W	B, D, F	S	P, R	DAL, SHA, TEP
RWR89#2841%&	2840	3	S, W	B, D	S	P, R	DAL, SHA, TEP
RWR89#2871%&	2870	3	S, W	B, D, F	S	P, R	DAL, SHA, TEP
RWR89#2911%&	2910	3	S, W	B, D	S	P, R	DAL, SHA, TEP
RWR89#2941%&	2940	3	S, W	B, D, F	S	P, R	DAL, SHA, TEP
RWR89#2981%&	2980	3	S, W	B, D	S	P, R	DAL, SHA, TEP
RWR89#3011%&	3010	3	S, W	B, D, F	S	P, R	DAL, SHA, TEP
RWR89#3051%&	3050	3	S, W	B, D	S	P, R	DAL, SHA, TEP
RWR89#3091%&	3090	3	S, W	B, D, F	S	P, R	DAL, SHA, TEP
RWR89#3121%&	3120	3	S, W	B, D	S	P, R	DAL, SHA, TEP
	Resistance	Power	Terminal	Resistance	Level 1	Level 2	
Part Number	Value (Ohms)	Rating (W)	Characteristic (#)	Tolerance (%)	(FRL)(&)	(FRL)(&)	Manufacturer
RWR89#3161%&	3160	3	S, W	B, D, F	S	P, R	DAL, SHA, TEP
RWR89#3201%&	3200	3	S, W	B, D	S	P, R	DAL, SHA, TEP
RWR89#3241%&	3240	3	S, W	B, D, F	S	P, R	DAL, SHA, TEP
RWR89#3281%&	3280	3	S, W	B, D	S	P, R	DAL, SHA, TEP
RWR89#3321%&	3320	3	S, W	B, D, F	S	P, R	DAL, SHA, TEP
RWR89#3361%&	3360	3	S, W	B, D	S	P, R	DAL, SHA, TEP
RWR89#3401%&	3400	3	S, W	B, D, F	S	P, R	DAL, SHA, TEP
RWR89#3441%&	3440	3	S, W	B, D	S	P, R	DAL, SHA, TEP
RWR89#3481%&	3480	3	S, W	B, D, F	S	P, R	DAL, SHA, TEP
RWR89#3521%&	3520	3	S, W	B, D	S	P, R	DAL, SHA, TEP
RWR89#3571%&	3570	3	S, W	B, D, F	S	P, R	DAL, SHA, TEP

	Resistance	Power	Terminal	Resistance	Level 1	Level 2	
Part Number	Value (Ohms)	Rating (W)	Characteristic (#)	Tolerance (%)	(FRL)(&)	(FRL)(&)	Manufacturer

Physical Dimensions Table

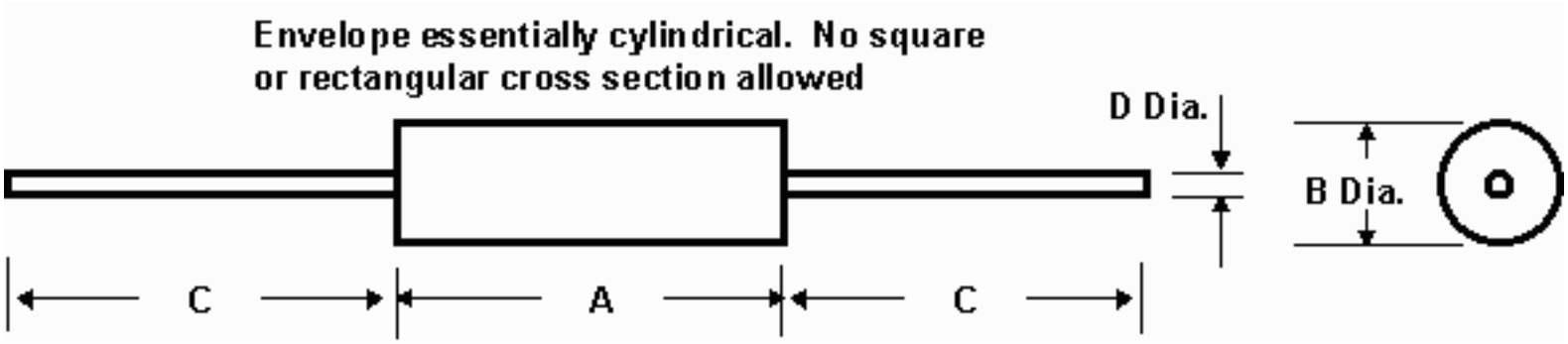

Resistor Style	A	B	C (min)	D
RWR78	1.780 +/- 0.062	0.375 +/- 0.031	1.500	0.040 +/- 0.002
RWR80	0.406 +/- 0.031	0.094 +/- 0.031	1.500	0.020 +/- 0.0015
RWR81	0.250 +/- 0.031	0.085 +/- 0.020	1.500	0.020 +/- 0.0015
RWR84	0.875 +/- 0.062	0.312 +/- 0.031	1.500	0.040 +/- 0.002
RWR89	0.560 +/- 0.062	0.187 +/- 0.020	1.500	0.032 +/- 0.002

NOTES:

1. Dimensions are in inches.

2. Lead concentric tolerance is to be measured at the point of lead egress from the resistor body. It shall be within 0.016 TIR for RWR80, RWR81 and RWR89; and 0.032 TIR for RWR78 and RWR84.

3. Dimension A is "clean lead" to "clean lead".

APPLICATION NOTES FOR MIL-PRF-39009

1) The maximum resistance value of preferred wirewound resistors is constrained by the size of the wire used in their construction. Wire size of less than 0.001 inch (0.03 mm) in nominal diameter is not recommended for NASA use.

2) These aluminum-housed, chassis-mounted styles are assigned power ratings when mounted on test chassis areas of a specific size at an ambient temperature of 25deg.C.

Part Number Ordering Information, example and explanation:

RER60F1001R where,

RER	60	F	1001
Style (Fixed, Wirewound, (Power Type, Chassis-Mounted), Established Reliability Resistors Conforming to MIL-PRF-39009)	Shape, Dimensions, Power Rating of the Resistor	Resistance Tolerance	Resistance Value

Part number ordering options are developed using the following criteria:

Style	Detail Specification	Description
RER60	MIL-PRF-39009/1	5 Watt, Inductively Wound
RER65	MIL-PRF-39009/1	10 Watt, Inductively Wound
RER70	MIL-PRF-39009/1	20 Watt, Inductively Wound
RER75	MIL-PRF-39009/1	30 Watt, Inductively Wound
RER40	MIL-PRF-39009/2	5 Watt, Non-Inductively Wound
RER45	MIL-PRF-39009/2	10 Watt, Non-Inductively Wound
RER50	MIL-PRF-39009/2	20 Watt, Non-Inductively Wound
RER55	MIL-PRF-39009/2	30 Watt, Non-Inductively Wound

Resistance Tolerance
F = +/- 1%

Failure Rate Level

P = 0.1%/1000 hrs (

Level 2

)

R = 0.01%/1000 hrs (

Level 2

)

Resistance Values:

Resistance values in ohms are contained in the following listing. When ordering, the first three digits represent significant figures and the last digit specifies the number of zeroes to follow. For example 1001 indicates 1,000 ohms and 1002 indicates 10,000 ohms. For values less than 100 ohms the letter "R" is used to indicate a decimal point. For example 10R0 indicates 10.0 ohms.

Revision History for MIL-PRF-39009 Listing in the NPSL

03/12/98	Corrected parts listing tables to fix error in the available "decade" values. Errors existed for all decade values from 767 through 976.
03/05/98	Added dimensional drawings to this section
11/28/97	Made changes indicating the specification conversion to a performance specification (MIL-PRF-39009 instead of MIL-R-39009)
07/01/97	Initial Release of MIL-R-39009 Section in the NPSL

Go to -

NEPP

|

NPSL

|

Resistors

MIL-PRF-39009, RESISTORS

Fixed, Resistor, Wirewound, (Power Type, Chassis-Mounted),

Established Reliability

RER Styles

Part Number/Ordering Explanation

Important! Application Notes

Revision History for MIL-PRF-39009 Listing in the NPSL

Last Revision: 03/12/98

Click on the link below to see the associated parts selection listing:

Style	Detail Specification	Description [Click Here Dimensional Drawing]
RER60	MIL-PRF-39009/1	5 Watt, Axial Lead, Inductive 0.1 ohms to 3.32 kohms
RER65	MIL-PRF-39009/1	10 Watt, Axial Lead, Inductive 0.1 ohms to 5.62 kohms
RER70	MIL-PRF-39009/1	20 Watt, Axial Lead, Inductive 0.1 ohms to 9.76 kohms
RER75	MIL-PRF-39009/1	30 Watt, Axial Lead, Inductive 0.1 ohms to 39.2 kohms
RER40	MIL-PRF-39009/2	5 Watt, Axial Lead, Non-Inductive 1 ohm to 1.65 kohms
RER45	MIL-PRF-39009/2	10 Watt, Axial Lead, Non-Inductive 1 ohm to 2.8 kohms
RER50	MIL-PRF-39009/2	20 Watt, Axial Lead, Non-Inductive 1 ohm to 6.04 kohms
RER55	MIL-PRF-39009/2	30 Watt, Axial Lead, Non-Inductive 1 ohm to 9.76 kohms

RER40 Wirewound Resistors

	Resistance	Power	Resistance		Level 1	Level 2	
Part Number	Value (Ohms)	Rating (W)	Tolerance	Winding	(FRL)(&)	(FRL)(&)	Manufacturer
RER40F1R00&	1.00	5	F	NONINDUCTIVE	R	P	DAL
RER40F1R02&	1.02	5	F	NONINDUCTIVE	R	P	DAL
RER40F1R05&	1.05	5	F	NONINDUCTIVE	R	P	DAL
RER40F1R07&	1.07	5	F	NONINDUCTIVE	R	P	DAL
RER40F1R10&	1.10	5	F	NONINDUCTIVE	R	P	DAL
RER40F1R13&	1.13	5	F	NONINDUCTIVE	R	P	DAL
RER40F1R15&	1.15	5	F	NONINDUCTIVE	R	P	DAL
RER40F1R18&	1.18	5	F	NONINDUCTIVE	R	P	DAL
RER40F1R21&	1.21	5	F	NONINDUCTIVE	R	P	DAL
RER40F1R24&	1.24	5	F	NONINDUCTIVE	R	P	DAL
RER40F1R27&	1.27	5	F	NONINDUCTIVE	R	P	DAL
RER40F1R30&	1.30	5	F	NONINDUCTIVE	R	P	DAL
RER40F1R33&	1.33	5	F	NONINDUCTIVE	R	P	DAL
RER40F1R37&	1.37	5	F	NONINDUCTIVE	R	P	DAL
RER40F1R40&	1.40	5	F	NONINDUCTIVE	R	P	DAL

RER40F1R43&	1.43	5	F	NONINDUCTIVE	R	P	DAL
RER40F1R47&	1.47	5	F	NONINDUCTIVE	R	P	DAL
RER40F1R50&	1.50	5	F	NONINDUCTIVE	R	P	DAL
RER40F1R54&	1.54	5	F	NONINDUCTIVE	R	P	DAL
RER40F1R58&	1.58	5	F	NONINDUCTIVE	R	P	DAL
RER40F1R62&	1.62	5	F	NONINDUCTIVE	R	P	DAL
RER40F1R65&	1.65	5	F	NONINDUCTIVE	R	P	DAL
RER40F1R69&	1.69	5	F	NONINDUCTIVE	R	P	DAL
RER40F1R74&	1.74	5	F	NONINDUCTIVE	R	P	DAL
RER40F1R78&	1.78	5	F	NONINDUCTIVE	R	P	DAL
RER40F1R82&	1.82	5	F	NONINDUCTIVE	R	P	DAL
RER40F1R87&	1.87	5	F	NONINDUCTIVE	R	P	DAL
RER40F1R91&	1.91	5	F	NONINDUCTIVE	R	P	DAL
RER40F1R96&	1.96	5	F	NONINDUCTIVE	R	P	DAL
RER40F2R00&	2.00	5	F	NONINDUCTIVE	R	P	DAL
RER40F2R05&	2.05	5	F	NONINDUCTIVE	R	P	DAL
RER40F2R10&	2.10	5	F	NONINDUCTIVE	R	P	DAL
RER40F2R15&	2.15	5	F	NONINDUCTIVE	R	P	DAL
RER40F2R21&	2.21	5	F	NONINDUCTIVE	R	P	DAL
RER40F2R26&	2.26	5	F	NONINDUCTIVE	R	P	DAL
RER40F2R32&	2.32	5	F	NONINDUCTIVE	R	P	DAL
RER40F2R37&	2.37	5	F	NONINDUCTIVE	R	P	DAL
RER40F2R43&	2.43	5	F	NONINDUCTIVE	R	P	DAL
RER40F2R49&	2.49	5	F	NONINDUCTIVE	R	P	DAL
RER40F2R55&	2.55	5	F	NONINDUCTIVE	R	P	DAL
RER40F2R61&	2.61	5	F	NONINDUCTIVE	R	P	DAL
RER40F2R67&	2.67	5	F	NONINDUCTIVE	R	P	DAL
RER40F2R74&	2.74	5	F	NONINDUCTIVE	R	P	DAL
RER40F2R80&	2.80	5	F	NONINDUCTIVE	R	P	DAL
RER40F2R87&	2.87	5	F	NONINDUCTIVE	R	P	DAL
RER40F2R94&	2.94	5	F	NONINDUCTIVE	R	P	DAL
RER40F3R01&	3.01	5	F	NONINDUCTIVE	R	P	DAL
RER40F3R09&	3.09	5	F	NONINDUCTIVE	R	P	DAL
RER40F3R16&	3.16	5	F	NONINDUCTIVE	R	P	DAL
RER40F3R24&	3.24	5	F	NONINDUCTIVE	R	P	DAL
RER40F3R32&	3.32	5	F	NONINDUCTIVE	R	P	DAL
RER40F3R40&	3.40	5	F	NONINDUCTIVE	R	P	DAL
RER40F3R48&	3.48	5	F	NONINDUCTIVE	R	P	DAL
RER40F3R57&	3.57	5	F	NONINDUCTIVE	R	P	DAL
RER40F3R65&	3.65	5	F	NONINDUCTIVE	R	P	DAL
RER40F3R74&	3.74	5	F	NONINDUCTIVE	R	P	DAL
RER40F3R83&	3.83	5	F	NONINDUCTIVE	R	P	DAL
RER40F3R92&	3.92	5	F	NONINDUCTIVE	R	P	DAL
RER40F4R02&	4.02	5	F	NONINDUCTIVE	R	P	DAL
RER40F4R12&	4.12	5	F	NONINDUCTIVE	R	P	DAL
RER40F4R22&	4.22	5	F	NONINDUCTIVE	R	P	DAL
RER40F4R32&	4.32	5	F	NONINDUCTIVE	R	P	DAL

RER40F4R42&	4.42	5	F	NONINDUCTIVE	R	P	DAL
RER40F4R53&	4.53	5	F	NONINDUCTIVE	R	P	DAL
RER40F4R64&	4.64	5	F	NONINDUCTIVE	R	P	DAL
RER40F4R75&	4.75	5	F	NONINDUCTIVE	R	P	DAL
RER40F4R87&	4.87	5	F	NONINDUCTIVE	R	P	DAL
RER40F4R99&	4.99	5	F	NONINDUCTIVE	R	P	DAL
RER40F5R11&	5.11	5	F	NONINDUCTIVE	R	P	DAL
RER40F5R23&	5.23	5	F	NONINDUCTIVE	R	P	DAL
RER40F5R36&	5.36	5	F	NONINDUCTIVE	R	P	DAL
RER40F5R49&	5.49	5	F	NONINDUCTIVE	R	P	DAL
RER40F5R62&	5.62	5	F	NONINDUCTIVE	R	P	DAL
RER40F5R76&	5.76	5	F	NONINDUCTIVE	R	P	DAL
RER40F5R90&	5.90	5	F	NONINDUCTIVE	R	P	DAL
RER40F6R04&	6.04	5	F	NONINDUCTIVE	R	P	DAL
RER40F6R19&	6.19	5	F	NONINDUCTIVE	R	P	DAL
RER40F6R34&	6.34	5	F	NONINDUCTIVE	R	P	DAL
RER40F6R49&	6.49	5	F	NONINDUCTIVE	R	P	DAL
RER40F6R65&	6.65	5	F	NONINDUCTIVE	R	P	DAL
RER40F6R81&	6.81	5	F	NONINDUCTIVE	R	P	DAL
RER40F6R98&	6.98	5	F	NONINDUCTIVE	R	P	DAL
RER40F7R15&	7.15	5	F	NONINDUCTIVE	R	P	DAL
RER40F7R32&	7.32	5	F	NONINDUCTIVE	R	P	DAL
RER40F7R50&	7.50	5	F	NONINDUCTIVE	R	P	DAL
RER40F7R68&	7.68	5	F	NONINDUCTIVE	R	P	DAL
RER40F7R87&	7.87	5	F	NONINDUCTIVE	R	P	DAL
RER40F8R06&	8.06	5	F	NONINDUCTIVE	R	P	DAL
RER40F8R25&	8.25	5	F	NONINDUCTIVE	R	P	DAL
RER40F8R45&	8.45	5	F	NONINDUCTIVE	R	P	DAL
RER40F8R66&	8.66	5	F	NONINDUCTIVE	R	P	DAL
RER40F8R87&	8.87	5	F	NONINDUCTIVE	R	P	DAL
RER40F9R09&	9.09	5	F	NONINDUCTIVE	R	P	DAL
RER40F9R31&	9.31	5	F	NONINDUCTIVE	R	P	DAL
RER40F9R53&	9.53	5	F	NONINDUCTIVE	R	P	DAL
RER40F9R76&	9.76	5	F	NONINDUCTIVE	R	P	DAL
RER40F10R0&	10.0	5	F	NONINDUCTIVE	R	P	DAL
RER40F10R2&	10.2	5	F	NONINDUCTIVE	R	P	DAL
RER40F10R5&	10.5	5	F	NONINDUCTIVE	R	P	DAL
RER40F10R7&	10.7	5	F	NONINDUCTIVE	R	P	DAL
RER40F11R0&	11.0	5	F	NONINDUCTIVE	R	P	DAL
RER40F11R3&	11.3	5	F	NONINDUCTIVE	R	P	DAL
RER40F11R5&	11.5	5	F	NONINDUCTIVE	R	P	DAL
RER40F11R8&	11.8	5	F	NONINDUCTIVE	R	P	DAL
RER40F12R1&	12.1	5	F	NONINDUCTIVE	R	P	DAL
RER40F12R4&	12.4	5	F	NONINDUCTIVE	R	P	DAL
RER40F12R7&	12.7	5	F	NONINDUCTIVE	R	P	DAL
RER40F13R0&	13.0	5	F	NONINDUCTIVE	R	P	DAL
RER40F13R3&	13.3	5	F	NONINDUCTIVE	R	P	DAL

RER40F13R7&	13.7	5	F	NONINDUCTIVE	R	P	DAL
RER40F14R0&	14.0	5	F	NONINDUCTIVE	R	P	DAL
RER40F14R3&	14.3	5	F	NONINDUCTIVE	R	P	DAL
RER40F14R7&	14.7	5	F	NONINDUCTIVE	R	P	DAL
RER40F15R0&	15.0	5	F	NONINDUCTIVE	R	P	DAL
RER40F15R4&	15.4	5	F	NONINDUCTIVE	R	P	DAL
RER40F15R8&	15.8	5	F	NONINDUCTIVE	R	P	DAL
RER40F16R2&	16.2	5	F	NONINDUCTIVE	R	P	DAL
RER40F16R5&	16.5	5	F	NONINDUCTIVE	R	P	DAL
RER40F16R9&	16.9	5	F	NONINDUCTIVE	R	P	DAL
RER40F17R4&	17.4	5	F	NONINDUCTIVE	R	P	DAL
RER40F17R8&	17.8	5	F	NONINDUCTIVE	R	P	DAL
RER40F18R2&	18.2	5	F	NONINDUCTIVE	R	P	DAL
RER40F18R7&	18.7	5	F	NONINDUCTIVE	R	P	DAL
RER40F19R1&	19.1	5	F	NONINDUCTIVE	R	P	DAL
RER40F19R6&	19.6	5	F	NONINDUCTIVE	R	P	DAL
RER40F20R0&	20.0	5	F	NONINDUCTIVE	R	P	DAL
RER40F20R5&	20.5	5	F	NONINDUCTIVE	R	P	DAL
RER40F21R0&	21.0	5	F	NONINDUCTIVE	R	P	DAL
RER40F21R5&	21.5	5	F	NONINDUCTIVE	R	P	DAL
RER40F22R1&	22.1	5	F	NONINDUCTIVE	R	P	DAL
RER40F22R6&	22.6	5	F	NONINDUCTIVE	R	P	DAL
RER40F23R2&	23.2	5	F	NONINDUCTIVE	R	P	DAL
RER40F23R7&	23.7	5	F	NONINDUCTIVE	R	P	DAL
RER40F24R3&	24.3	5	F	NONINDUCTIVE	R	P	DAL
RER40F24R9&	24.9	5	F	NONINDUCTIVE	R	P	DAL
RER40F25R5&	25.5	5	F	NONINDUCTIVE	R	P	DAL
RER40F26R1&	26.1	5	F	NONINDUCTIVE	R	P	DAL
RER40F26R7&	26.7	5	F	NONINDUCTIVE	R	P	DAL
RER40F27R4&	27.4	5	F	NONINDUCTIVE	R	P	DAL
RER40F28R0&	28.0	5	F	NONINDUCTIVE	R	P	DAL
RER40F28R7&	28.7	5	F	NONINDUCTIVE	R	P	DAL
RER40F29R4&	29.4	5	F	NONINDUCTIVE	R	P	DAL
RER40F30R1&	30.1	5	F	NONINDUCTIVE	R	P	DAL
RER40F30R9&	30.9	5	F	NONINDUCTIVE	R	P	DAL
RER40F31R6&	31.6	5	F	NONINDUCTIVE	R	P	DAL
RER40F32R4&	32.4	5	F	NONINDUCTIVE	R	P	DAL
RER40F33R2&	33.2	5	F	NONINDUCTIVE	R	P	DAL
RER40F34R0&	34.0	5	F	NONINDUCTIVE	R	P	DAL
RER40F34R8&	34.8	5	F	NONINDUCTIVE	R	P	DAL
RER40F35R7&	35.7	5	F	NONINDUCTIVE	R	P	DAL
RER40F36R5&	36.5	5	F	NONINDUCTIVE	R	P	DAL
RER40F37R4&	37.4	5	F	NONINDUCTIVE	R	P	DAL
RER40F38R3&	38.3	5	F	NONINDUCTIVE	R	P	DAL
RER40F39R2&	39.2	5	F	NONINDUCTIVE	R	P	DAL
RER40F40R2&	40.2	5	F	NONINDUCTIVE	R	P	DAL
RER40F41R2&	41.2	5	F	NONINDUCTIVE	R	P	DAL

RER40F42R2&	42.2	5	F	NONINDUCTIVE	R	P	DAL
RER40F43R2&	43.2	5	F	NONINDUCTIVE	R	P	DAL
RER40F44R2&	44.2	5	F	NONINDUCTIVE	R	P	DAL
RER40F45R3&	45.3	5	F	NONINDUCTIVE	R	P	DAL
RER40F46R4&	46.4	5	F	NONINDUCTIVE	R	P	DAL
RER40F47R5&	47.5	5	F	NONINDUCTIVE	R	P	DAL
RER40F48R7&	48.7	5	F	NONINDUCTIVE	R	P	DAL
RER40F49R9&	49.9	5	F	NONINDUCTIVE	R	P	DAL
RER40F51R1&	51.1	5	F	NONINDUCTIVE	R	P	DAL
RER40F52R3&	52.3	5	F	NONINDUCTIVE	R	P	DAL
RER40F53R6&	53.6	5	F	NONINDUCTIVE	R	P	DAL
RER40F54R9&	54.9	5	F	NONINDUCTIVE	R	P	DAL
RER40F56R2&	56.2	5	F	NONINDUCTIVE	R	P	DAL
RER40F57R6&	57.6	5	F	NONINDUCTIVE	R	P	DAL
RER40F59R0&	59.0	5	F	NONINDUCTIVE	R	P	DAL
RER40F60R4&	60.4	5	F	NONINDUCTIVE	R	P	DAL
RER40F61R9&	61.9	5	F	NONINDUCTIVE	R	P	DAL
RER40F63R4&	63.4	5	F	NONINDUCTIVE	R	P	DAL
RER40F64R9&	64.9	5	F	NONINDUCTIVE	R	P	DAL
RER40F66R5&	66.5	5	F	NONINDUCTIVE	R	P	DAL
RER40F68R1&	68.1	5	F	NONINDUCTIVE	R	P	DAL
RER40F69R8&	69.8	5	F	NONINDUCTIVE	R	P	DAL
RER40F71R5&	71.5	5	F	NONINDUCTIVE	R	P	DAL
RER40F73R2&	73.2	5	F	NONINDUCTIVE	R	P	DAL
RER40F75R0&	75.0	5	F	NONINDUCTIVE	R	P	DAL
RER40F76R8&	76.8	5	F	NONINDUCTIVE	R	P	DAL
RER40F78R7&	78.7	5	F	NONINDUCTIVE	R	P	DAL
RER40F80R6&	80.6	5	F	NONINDUCTIVE	R	P	DAL
RER40F82R5&	82.5	5	F	NONINDUCTIVE	R	P	DAL
RER40F84R5&	84.5	5	F	NONINDUCTIVE	R	P	DAL
RER40F86R6&	86.6	5	F	NONINDUCTIVE	R	P	DAL
RER40F88R7&	88.7	5	F	NONINDUCTIVE	R	P	DAL
RER40F90R9&	90.9	5	F	NONINDUCTIVE	R	P	DAL
RER40F93R1&	93.1	5	F	NONINDUCTIVE	R	P	DAL
RER40F95R3&	95.3	5	F	NONINDUCTIVE	R	P	DAL
RER40F97R6&	97.6	5	F	NONINDUCTIVE	R	P	DAL
RER40F100R&	100	5	F	NONINDUCTIVE	R	P	DAL
RER40F102R&	102	5	F	NONINDUCTIVE	R	P	DAL
RER40F105R&	105	5	F	NONINDUCTIVE	R	P	DAL
RER40F107R&	107	5	F	NONINDUCTIVE	R	P	DAL
RER40F110R&	110	5	F	NONINDUCTIVE	R	P	DAL
RER40F113R&	113	5	F	NONINDUCTIVE	R	P	DAL
RER40F115R&	115	5	F	NONINDUCTIVE	R	P	DAL
RER40F118R&	118	5	F	NONINDUCTIVE	R	P	DAL
RER40F121R&	121	5	F	NONINDUCTIVE	R	P	DAL
RER40F124R&	124	5	F	NONINDUCTIVE	R	P	DAL
RER40F127R&	127	5	F	NONINDUCTIVE	R	P	DAL

RER40F130R&	130	5	F	NONINDUCTIVE	R	P	DAL
RER40F133R&	133	5	F	NONINDUCTIVE	R	P	DAL
RER40F137R&	137	5	F	NONINDUCTIVE	R	P	DAL
RER40F140R&	140	5	F	NONINDUCTIVE	R	P	DAL
RER40F143R&	143	5	F	NONINDUCTIVE	R	P	DAL
RER40F147R&	147	5	F	NONINDUCTIVE	R	P	DAL
RER40F150R&	150	5	F	NONINDUCTIVE	R	P	DAL
RER40F154R&	154	5	F	NONINDUCTIVE	R	P	DAL
RER40F158R&	158	5	F	NONINDUCTIVE	R	P	DAL
RER40F162R&	162	5	F	NONINDUCTIVE	R	P	DAL
RER40F165R&	165	5	F	NONINDUCTIVE	R	P	DAL
RER40F169R&	169	5	F	NONINDUCTIVE	R	P	DAL
RER40F174R&	174	5	F	NONINDUCTIVE	R	P	DAL
RER40F178R&	178	5	F	NONINDUCTIVE	R	P	DAL
RER40F182R&	182	5	F	NONINDUCTIVE	R	P	DAL
RER40F187R&	187	5	F	NONINDUCTIVE	R	P	DAL
RER40F191R&	191	5	F	NONINDUCTIVE	R	P	DAL
RER40F196R&	196	5	F	NONINDUCTIVE	R	P	DAL
RER40F200R&	200	5	F	NONINDUCTIVE	R	P	DAL
RER40F205R&	205	5	F	NONINDUCTIVE	R	P	DAL
RER40F210R&	210	5	F	NONINDUCTIVE	R	P	DAL
RER40F215R&	215	5	F	NONINDUCTIVE	R	P	DAL
RER40F221R&	221	5	F	NONINDUCTIVE	R	P	DAL
RER40F226R&	226	5	F	NONINDUCTIVE	R	P	DAL
RER40F232R&	232	5	F	NONINDUCTIVE	R	P	DAL
RER40F237R&	237	5	F	NONINDUCTIVE	R	P	DAL
RER40F243R&	243	5	F	NONINDUCTIVE	R	P	DAL
RER40F249R&	249	5	F	NONINDUCTIVE	R	P	DAL
RER40F255R&	255	5	F	NONINDUCTIVE	R	P	DAL
RER40F261R&	261	5	F	NONINDUCTIVE	R	P	DAL
RER40F267R&	267	5	F	NONINDUCTIVE	R	P	DAL
RER40F274R&	274	5	F	NONINDUCTIVE	R	P	DAL
RER40F280R&	280	5	F	NONINDUCTIVE	R	P	DAL
RER40F287R&	287	5	F	NONINDUCTIVE	R	P	DAL
RER40F294R&	294	5	F	NONINDUCTIVE	R	P	DAL
RER40F301R&	301	5	F	NONINDUCTIVE	R	P	DAL
RER40F309R&	309	5	F	NONINDUCTIVE	R	P	DAL
RER40F316R&	316	5	F	NONINDUCTIVE	R	P	DAL
RER40F324R&	324	5	F	NONINDUCTIVE	R	P	DAL
RER40F332R&	332	5	F	NONINDUCTIVE	R	P	DAL
RER40F340R&	340	5	F	NONINDUCTIVE	R	P	DAL
RER40F348R&	348	5	F	NONINDUCTIVE	R	P	DAL
RER40F357R&	357	5	F	NONINDUCTIVE	R	P	DAL
RER40F365R&	365	5	F	NONINDUCTIVE	R	P	DAL
RER40F374R&	374	5	F	NONINDUCTIVE	R	P	DAL
RER40F383R&	383	5	F	NONINDUCTIVE	R	P	DAL
RER40F392R&	392	5	F	NONINDUCTIVE	R	P	DAL

RER40F402R&	402	5	F	NONINDUCTIVE	R	P	DAL
RER40F412R&	412	5	F	NONINDUCTIVE	R	P	DAL
RER40F422R&	422	5	F	NONINDUCTIVE	R	P	DAL
RER40F432R&	432	5	F	NONINDUCTIVE	R	P	DAL
RER40F442R&	442	5	F	NONINDUCTIVE	R	P	DAL
RER40F453R&	453	5	F	NONINDUCTIVE	R	P	DAL
RER40F464R&	464	5	F	NONINDUCTIVE	R	P	DAL
RER40F475R&	475	5	F	NONINDUCTIVE	R	P	DAL
RER40F487R&	487	5	F	NONINDUCTIVE	R	P	DAL
RER40F499R&	499	5	F	NONINDUCTIVE	R	P	DAL
RER40F511R&	511	5	F	NONINDUCTIVE	R	P	DAL
RER40F523R&	523	5	F	NONINDUCTIVE	R	P	DAL
RER40F536R&	536	5	F	NONINDUCTIVE	R	P	DAL
RER40F549R&	549	5	F	NONINDUCTIVE	R	P	DAL
RER40F562R&	562	5	F	NONINDUCTIVE	R	P	DAL
RER40F576R&	576	5	F	NONINDUCTIVE	R	P	DAL
RER40F590R&	590	5	F	NONINDUCTIVE	R	P	DAL
RER40F604R&	604	5	F	NONINDUCTIVE	R	P	DAL
RER40F619R&	619	5	F	NONINDUCTIVE	R	P	DAL
RER40F634R&	634	5	F	NONINDUCTIVE	R	P	DAL
RER40F649R&	649	5	F	NONINDUCTIVE	R	P	DAL
RER40F665R&	665	5	F	NONINDUCTIVE	R	P	DAL
RER40F681R&	681	5	F	NONINDUCTIVE	R	P	DAL
RER40F698R&	698	5	F	NONINDUCTIVE	R	P	DAL
RER40F715R&	715	5	F	NONINDUCTIVE	R	P	DAL
RER40F732R&	732	5	F	NONINDUCTIVE	R	P	DAL
RER40F750R&	750	5	F	NONINDUCTIVE	R	P	DAL
RER40F768R&	768	5	F	NONINDUCTIVE	R	P	DAL
RER40F787R&	787	5	F	NONINDUCTIVE	R	P	DAL
RER40F806R&	806	5	F	NONINDUCTIVE	R	P	DAL
RER40F825R&	825	5	F	NONINDUCTIVE	R	P	DAL
RER40F845R&	845	5	F	NONINDUCTIVE	R	P	DAL
RER40F866R&	866	5	F	NONINDUCTIVE	R	P	DAL
RER40F887R&	887	5	F	NONINDUCTIVE	R	P	DAL
RER40F909R&	909	5	F	NONINDUCTIVE	R	P	DAL
RER40F931R&	931	5	F	NONINDUCTIVE	R	P	DAL
RER40F953R&	953	5	F	NONINDUCTIVE	R	P	DAL
RER40F976R&	976	5	F	NONINDUCTIVE	R	P	DAL
RER40F1001&	1,000	5	F	NONINDUCTIVE	R	P	DAL
RER40F1021&	1,020	5	F	NONINDUCTIVE	R	P	DAL
RER40F1051&	1,050	5	F	NONINDUCTIVE	R	P	DAL
RER40F1071&	1,070	5	F	NONINDUCTIVE	R	P	DAL
RER40F1101&	1,100	5	F	NONINDUCTIVE	R	P	DAL
RER40F1131&	1,130	5	F	NONINDUCTIVE	R	P	DAL
RER40F1151&	1,150	5	F	NONINDUCTIVE	R	P	DAL
RER40F1181&	1,180	5	F	NONINDUCTIVE	R	P	DAL
RER40F1211&	1,210	5	F	NONINDUCTIVE	R	P	DAL

RER40F1241&	1,240	5	F	NONINDUCTIVE	R	P	DAL
RER40F1271&	1,270	5	F	NONINDUCTIVE	R	P	DAL
RER40F1301&	1,300	5	F	NONINDUCTIVE	R	P	DAL
RER40F1331&	1,330	5	F	NONINDUCTIVE	R	P	DAL
RER40F1371&	1,370	5	F	NONINDUCTIVE	R	P	DAL
RER40F1401&	1,400	5	F	NONINDUCTIVE	R	P	DAL
RER40F1431&	1,430	5	F	NONINDUCTIVE	R	P	DAL
RER40F1471&	1,470	5	F	NONINDUCTIVE	R	P	DAL
RER40F1501&	1,500	5	F	NONINDUCTIVE	R	P	DAL
RER40F1541&	1,540	5	F	NONINDUCTIVE	R	P	DAL
RER40F1581&	1,580	5	F	NONINDUCTIVE	R	P	DAL
RER40F1621&	1,620	5	F	NONINDUCTIVE	R	P	DAL
RER40F1651&	1,650	5	F	NONINDUCTIVE	R	P	DAL

RER40 RESISTORS DECADE BREAKDOWN

Click on the link below to see the associated parts selection listing:

Resistance Range
1.00 Ohms through 9.76 Ohms
10.0 Ohms through 97.6 Ohms
100 Ohms through 976 Ohms
1000 Ohms through 1650 Ohms

RER40 Wirewound Resistors: 1.00 Ohms through 9.76 Ohms

	Resistance	Power	Resistance		Level 1	Level 2	
Part Number	Value (Ohms)	Rating (W)	Tolerance	Winding	(FRL)(&)	(FRL)(&)	Manufacturer
RER40F1R00&	1.00	5	F	NONINDUCTIVE	R	P	DAL
RER40F1R02&	1.02	5	F	NONINDUCTIVE	R	P	DAL
RER40F1R05&	1.05	5	F	NONINDUCTIVE	R	P	DAL
RER40F1R07&	1.07	5	F	NONINDUCTIVE	R	P	DAL
RER40F1R10&	1.10	5	F	NONINDUCTIVE	R	P	DAL
RER40F1R13&	1.13	5	F	NONINDUCTIVE	R	P	DAL
RER40F1R15&	1.15	5	F	NONINDUCTIVE	R	P	DAL
RER40F1R18&	1.18	5	F	NONINDUCTIVE	R	P	DAL
RER40F1R21&	1.21	5	F	NONINDUCTIVE	R	P	DAL
RER40F1R24&	1.24	5	F	NONINDUCTIVE	R	P	DAL
RER40F1R27&	1.27	5	F	NONINDUCTIVE	R	P	DAL
RER40F1R30&	1.30	5	F	NONINDUCTIVE	R	P	DAL
RER40F1R33&	1.33	5	F	NONINDUCTIVE	R	P	DAL
RER40F1R37&	1.37	5	F	NONINDUCTIVE	R	P	DAL
	Resistance	Power	Resistance		Level 1	Level 2	
Part Number	Value (Ohms)	Rating (W)	Tolerance	Winding	(FRL)(&)	(FRL)(&)	Manufacturer
RER40F1R40&	1.40	5	F	NONINDUCTIVE	R	P	DAL

RER40F1R43&	1.43	5	F	NONINDUCTIVE	R	P	DAL
RER40F1R47&	1.47	5	F	NONINDUCTIVE	R	P	DAL
RER40F1R50&	1.50	5	F	NONINDUCTIVE	R	P	DAL
RER40F1R54&	1.54	5	F	NONINDUCTIVE	R	P	DAL
RER40F1R58&	1.58	5	F	NONINDUCTIVE	R	P	DAL
RER40F1R62&	1.62	5	F	NONINDUCTIVE	R	P	DAL
RER40F1R65&	1.65	5	F	NONINDUCTIVE	R	P	DAL
RER40F1R69&	1.69	5	F	NONINDUCTIVE	R	P	DAL
RER40F1R74&	1.74	5	F	NONINDUCTIVE	R	P	DAL
RER40F1R78&	1.78	5	F	NONINDUCTIVE	R	P	DAL
RER40F1R82&	1.82	5	F	NONINDUCTIVE	R	P	DAL
RER40F1R87&	1.87	5	F	NONINDUCTIVE	R	P	DAL
	Resistance	Power	Resistance		Level 1	Level 2	
Part Number	Value (Ohms)	Rating (W)	Tolerance	Winding	(FRL)(&)	(FRL)(&)	Manufacturer
RER40F1R91&	1.91	5	F	NONINDUCTIVE	R	P	DAL
RER40F1R96&	1.96	5	F	NONINDUCTIVE	R	P	DAL
RER40F2R00&	2.00	5	F	NONINDUCTIVE	R	P	DAL
RER40F2R05&	2.05	5	F	NONINDUCTIVE	R	P	DAL
RER40F2R10&	2.10	5	F	NONINDUCTIVE	R	P	DAL
RER40F2R15&	2.15	5	F	NONINDUCTIVE	R	P	DAL
RER40F2R21&	2.21	5	F	NONINDUCTIVE	R	P	DAL
RER40F2R26&	2.26	5	F	NONINDUCTIVE	R	P	DAL
RER40F2R32&	2.32	5	F	NONINDUCTIVE	R	P	DAL
RER40F2R37&	2.37	5	F	NONINDUCTIVE	R	P	DAL
RER40F2R43&	2.43	5	F	NONINDUCTIVE	R	P	DAL
RER40F2R49&	2.49	5	F	NONINDUCTIVE	R	P	DAL
RER40F2R55&	2.55	5	F	NONINDUCTIVE	R	P	DAL
RER40F2R61&	2.61	5	F	NONINDUCTIVE	R	P	DAL
	Resistance	Power	Resistance		Level 1	Level 2	
Part Number	Value (Ohms)	Rating (W)	Tolerance	Winding	(FRL)(&)	(FRL)(&)	Manufacturer
RER40F2R67&	2.67	5	F	NONINDUCTIVE	R	P	DAL
RER40F2R74&	2.74	5	F	NONINDUCTIVE	R	P	DAL
RER40F2R80&	2.80	5	F	NONINDUCTIVE	R	P	DAL
RER40F2R87&	2.87	5	F	NONINDUCTIVE	R	P	DAL
RER40F2R94&	2.94	5	F	NONINDUCTIVE	R	P	DAL
RER40F3R01&	3.01	5	F	NONINDUCTIVE	R	P	DAL
RER40F3R09&	3.09	5	F	NONINDUCTIVE	R	P	DAL
RER40F3R16&	3.16	5	F	NONINDUCTIVE	R	P	DAL
RER40F3R24&	3.24	5	F	NONINDUCTIVE	R	P	DAL
RER40F3R32&	3.32	5	F	NONINDUCTIVE	R	P	DAL
RER40F3R40&	3.40	5	F	NONINDUCTIVE	R	P	DAL
RER40F3R48&	3.48	5	F	NONINDUCTIVE	R	P	DAL
RER40F3R57&	3.57	5	F	NONINDUCTIVE	R	P	DAL
	Resistance	Power	Resistance		Level 1	Level 2	
Part Number	Value (Ohms)	Rating (W)	Tolerance	Winding	(FRL)(&)	(FRL)(&)	Manufacturer
RER40F3R65&	3.65	5	F	NONINDUCTIVE	R	P	DAL
RER40F3R74&	3.74	5	F	NONINDUCTIVE	R	P	DAL

RER40F3R83&	3.83	5	F	NONINDUCTIVE	R	P	DAL
RER40F3R92&	3.92	5	F	NONINDUCTIVE	R	P	DAL
RER40F4R02&	4.02	5	F	NONINDUCTIVE	R	P	DAL
RER40F4R12&	4.12	5	F	NONINDUCTIVE	R	P	DAL
RER40F4R22&	4.22	5	F	NONINDUCTIVE	R	P	DAL
RER40F4R32&	4.32	5	F	NONINDUCTIVE	R	P	DAL
RER40F4R42&	4.42	5	F	NONINDUCTIVE	R	P	DAL
RER40F4R53&	4.53	5	F	NONINDUCTIVE	R	P	DAL
RER40F4R64&	4.64	5	F	NONINDUCTIVE	R	P	DAL
RER40F4R75&	4.75	5	F	NONINDUCTIVE	R	P	DAL
RER40F4R87&	4.87	5	F	NONINDUCTIVE	R	P	DAL
RER40F4R99&	4.99	5	F	NONINDUCTIVE	R	P	DAL
	Resistance	Power	Resistance		Level 1	Level 2	
Part Number	Value (Ohms)	Rating (W)	Tolerance	Winding	(FRL)(&)	(FRL)(&)	Manufacturer
RER40F5R11&	5.11	5	F	NONINDUCTIVE	R	P	DAL
RER40F5R23&	5.23	5	F	NONINDUCTIVE	R	P	DAL
RER40F5R36&	5.36	5	F	NONINDUCTIVE	R	P	DAL
RER40F5R49&	5.49	5	F	NONINDUCTIVE	R	P	DAL
RER40F5R62&	5.62	5	F	NONINDUCTIVE	R	P	DAL
RER40F5R76&	5.76	5	F	NONINDUCTIVE	R	P	DAL
RER40F5R90&	5.90	5	F	NONINDUCTIVE	R	P	DAL
RER40F6R04&	6.04	5	F	NONINDUCTIVE	R	P	DAL
RER40F6R19&	6.19	5	F	NONINDUCTIVE	R	P	DAL
RER40F6R34&	6.34	5	F	NONINDUCTIVE	R	P	DAL
RER40F6R49&	6.49	5	F	NONINDUCTIVE	R	P	DAL
RER40F6R65&	6.65	5	F	NONINDUCTIVE	R	P	DAL
RER40F6R81&	6.81	5	F	NONINDUCTIVE	R	P	DAL
	Resistance	Power	Resistance		Level 1	Level 2	
Part Number	Value (Ohms)	Rating (W)	Tolerance	Winding	(FRL)(&)	(FRL)(&)	Manufacturer
RER40F6R98&	6.98	5	F	NONINDUCTIVE	R	P	DAL
RER40F7R15&	7.15	5	F	NONINDUCTIVE	R	P	DAL
RER40F7R32&	7.32	5	F	NONINDUCTIVE	R	P	DAL
RER40F7R50&	7.50	5	F	NONINDUCTIVE	R	P	DAL
RER40F7R68&	7.68	5	F	NONINDUCTIVE	R	P	DAL
RER40F7R87&	7.87	5	F	NONINDUCTIVE	R	P	DAL
RER40F8R06&	8.06	5	F	NONINDUCTIVE	R	P	DAL
RER40F8R25&	8.25	5	F	NONINDUCTIVE	R	P	DAL
RER40F8R45&	8.45	5	F	NONINDUCTIVE	R	P	DAL
RER40F8R66&	8.66	5	F	NONINDUCTIVE	R	P	DAL
RER40F8R87&	8.87	5	F	NONINDUCTIVE	R	P	DAL
RER40F9R09&	9.09	5	F	NONINDUCTIVE	R	P	DAL
RER40F9R31&	9.31	5	F	NONINDUCTIVE	R	P	DAL
RER40F9R53&	9.53	5	F	NONINDUCTIVE	R	P	DAL
	Resistance	Power	Resistance		Level 1	Level 2	
Part Number	Value (Ohms)	Rating (W)	Tolerance	Winding	(FRL)(&)	(FRL)(&)	Manufacturer

	Resistance	Power	Resistance		Level 1	Level 2	
Part Number	Value (Ohms)	Rating (W)	Tolerance	Winding	(FRL)(&)	(FRL)(&)	Manufacturer
RER40F10R0&	10.0	5	F	NONINDUCTIVE	R	P	DAL
RER40F10R2&	10.2	5	F	NONINDUCTIVE	R	P	DAL
RER40F10R5&	10.5	5	F	NONINDUCTIVE	R	P	DAL
RER40F10R7&	10.7	5	F	NONINDUCTIVE	R	P	DAL
RER40F11R0&	11.0	5	F	NONINDUCTIVE	R	P	DAL
RER40F11R3&	11.3	5	F	NONINDUCTIVE	R	P	DAL
RER40F11R5&	11.5	5	F	NONINDUCTIVE	R	P	DAL
RER40F11R8&	11.8	5	F	NONINDUCTIVE	R	P	DAL
RER40F12R1&	12.1	5	F	NONINDUCTIVE	R	P	DAL
RER40F12R4&	12.4	5	F	NONINDUCTIVE	R	P	DAL
RER40F12R7&	12.7	5	F	NONINDUCTIVE	R	P	DAL
RER40F13R0&	13.0	5	F	NONINDUCTIVE	R	P	DAL
RER40F13R3&	13.3	5	F	NONINDUCTIVE	R	P	DAL
RER40F13R7&	13.7	5	F	NONINDUCTIVE	R	P	DAL
	Resistance	Power	Resistance		Level 1	Level 2	
Part Number	Value (Ohms)	Rating (W)	Tolerance	Winding	(FRL)(&)	(FRL)(&)	Manufacturer
RER40F14R0&	14.0	5	F	NONINDUCTIVE	R	P	DAL
RER40F14R3&	14.3	5	F	NONINDUCTIVE	R	P	DAL
RER40F14R7&	14.7	5	F	NONINDUCTIVE	R	P	DAL
RER40F15R0&	15.0	5	F	NONINDUCTIVE	R	P	DAL
RER40F15R4&	15.4	5	F	NONINDUCTIVE	R	P	DAL
RER40F15R8&	15.8	5	F	NONINDUCTIVE	R	P	DAL
RER40F16R2&	16.2	5	F	NONINDUCTIVE	R	P	DAL
RER40F16R5&	16.5	5	F	NONINDUCTIVE	R	P	DAL
RER40F16R9&	16.9	5	F	NONINDUCTIVE	R	P	DAL
RER40F17R4&	17.4	5	F	NONINDUCTIVE	R	P	DAL
RER40F17R8&	17.8	5	F	NONINDUCTIVE	R	P	DAL
RER40F18R2&	18.2	5	F	NONINDUCTIVE	R	P	DAL
RER40F18R7&	18.7	5	F	NONINDUCTIVE	R	P	DAL
	Resistance	Power	Resistance		Level 1	Level 2	
Part Number	Value (Ohms)	Rating (W)	Tolerance	Winding	(FRL)(&)	(FRL)(&)	Manufacturer
RER40F19R1&	19.1	5	F	NONINDUCTIVE	R	P	DAL
RER40F19R6&	19.6	5	F	NONINDUCTIVE	R	P	DAL
RER40F20R0&	20.0	5	F	NONINDUCTIVE	R	P	DAL
RER40F20R5&	20.5	5	F	NONINDUCTIVE	R	P	DAL
RER40F21R0&	21.0	5	F	NONINDUCTIVE	R	P	DAL
RER40F21R5&	21.5	5	F	NONINDUCTIVE	R	P	DAL
RER40F22R1&	22.1	5	F	NONINDUCTIVE	R	P	DAL
RER40F22R6&	22.6	5	F	NONINDUCTIVE	R	P	DAL
RER40F23R2&	23.2	5	F	NONINDUCTIVE	R	P	DAL
RER40F23R7&	23.7	5	F	NONINDUCTIVE	R	P	DAL
RER40F24R3&	24.3	5	F	NONINDUCTIVE	R	P	DAL

RER40F24R9&	24.9	5	F	NONINDUCTIVE	R	P	DAL
RER40F25R5&	25.5	5	F	NONINDUCTIVE	R	P	DAL
RER40F26R1&	26.1	5	F	NONINDUCTIVE	R	P	DAL
	Resistance	Power	Resistance		Level 1	Level 2	
Part Number	Value (Ohms)	Rating (W)	Tolerance	Winding	(FRL)(&)	(FRL)(&)	Manufacturer
RER40F26R7&	26.7	5	F	NONINDUCTIVE	R	P	DAL
RER40F27R4&	27.4	5	F	NONINDUCTIVE	R	P	DAL
RER40F28R0&	28.0	5	F	NONINDUCTIVE	R	P	DAL
RER40F28R7&	28.7	5	F	NONINDUCTIVE	R	P	DAL
RER40F29R4&	29.4	5	F	NONINDUCTIVE	R	P	DAL
RER40F30R1&	30.1	5	F	NONINDUCTIVE	R	P	DAL
RER40F30R9&	30.9	5	F	NONINDUCTIVE	R	P	DAL
RER40F31R6&	31.6	5	F	NONINDUCTIVE	R	P	DAL
RER40F32R4&	32.4	5	F	NONINDUCTIVE	R	P	DAL
RER40F33R2&	33.2	5	F	NONINDUCTIVE	R	P	DAL
RER40F34R0&	34.0	5	F	NONINDUCTIVE	R	P	DAL
RER40F34R8&	34.8	5	F	NONINDUCTIVE	R	P	DAL
RER40F35R7&	35.7	5	F	NONINDUCTIVE	R	P	DAL
	Resistance	Power	Resistance		Level 1	Level 2	
Part Number	Value (Ohms)	Rating (W)	Tolerance	Winding	(FRL)(&)	(FRL)(&)	Manufacturer
RER40F36R5&	36.5	5	F	NONINDUCTIVE	R	P	DAL
RER40F37R4&	37.4	5	F	NONINDUCTIVE	R	P	DAL
RER40F38R3&	38.3	5	F	NONINDUCTIVE	R	P	DAL
RER40F39R2&	39.2	5	F	NONINDUCTIVE	R	P	DAL
RER40F40R2&	40.2	5	F	NONINDUCTIVE	R	P	DAL
RER40F41R2&	41.2	5	F	NONINDUCTIVE	R	P	DAL
RER40F42R2&	42.2	5	F	NONINDUCTIVE	R	P	DAL
RER40F43R2&	43.2	5	F	NONINDUCTIVE	R	P	DAL
RER40F44R2&	44.2	5	F	NONINDUCTIVE	R	P	DAL
RER40F45R3&	45.3	5	F	NONINDUCTIVE	R	P	DAL
RER40F46R4&	46.4	5	F	NONINDUCTIVE	R	P	DAL
RER40F47R5&	47.5	5	F	NONINDUCTIVE	R	P	DAL
RER40F48R7&	48.7	5	F	NONINDUCTIVE	R	P	DAL
RER40F49R9&	49.9	5	F	NONINDUCTIVE	R	P	DAL
	Resistance	Power	Resistance		Level 1	Level 2	
Part Number	Value (Ohms)	Rating (W)	Tolerance	Winding	(FRL)(&)	(FRL)(&)	Manufacturer
RER40F51R1&	51.1	5	F	NONINDUCTIVE	R	P	DAL
RER40F52R3&	52.3	5	F	NONINDUCTIVE	R	P	DAL
RER40F53R6&	53.6	5	F	NONINDUCTIVE	R	P	DAL
RER40F54R9&	54.9	5	F	NONINDUCTIVE	R	P	DAL
RER40F56R2&	56.2	5	F	NONINDUCTIVE	R	P	DAL
RER40F57R6&	57.6	5	F	NONINDUCTIVE	R	P	DAL
RER40F59R0&	59.0	5	F	NONINDUCTIVE	R	P	DAL
RER40F60R4&	60.4	5	F	NONINDUCTIVE	R	P	DAL
RER40F61R9&	61.9	5	F	NONINDUCTIVE	R	P	DAL
RER40F63R4&	63.4	5	F	NONINDUCTIVE	R	P	DAL
RER40F64R9&	64.9	5	F	NONINDUCTIVE	R	P	DAL

RER40F66R5&	66.5	5	F	NONINDUCTIVE	R	P	DAL
RER40F68R1&	68.1	5	F	NONINDUCTIVE	R	P	DAL
	Resistance	Power	Resistance		Level 1	Level 2	
Part Number	Value (Ohms)	Rating (W)	Tolerance	Winding	(FRL)(&)	(FRL)(&)	Manufacturer
RER40F69R8&	69.8	5	F	NONINDUCTIVE	R	P	DAL
RER40F71R5&	71.5	5	F	NONINDUCTIVE	R	P	DAL
RER40F73R2&	73.2	5	F	NONINDUCTIVE	R	P	DAL
RER40F75R0&	75.0	5	F	NONINDUCTIVE	R	P	DAL
RER40F76R8&	76.8	5	F	NONINDUCTIVE	R	P	DAL
RER40F78R7&	78.7	5	F	NONINDUCTIVE	R	P	DAL
RER40F80R6&	80.6	5	F	NONINDUCTIVE	R	P	DAL
RER40F82R5&	82.5	5	F	NONINDUCTIVE	R	P	DAL
RER40F84R5&	84.5	5	F	NONINDUCTIVE	R	P	DAL
RER40F86R6&	86.6	5	F	NONINDUCTIVE	R	P	DAL
RER40F88R7&	88.7	5	F	NONINDUCTIVE	R	P	DAL
RER40F90R9&	90.9	5	F	NONINDUCTIVE	R	P	DAL
RER40F93R1&	93.1	5	F	NONINDUCTIVE	R	P	DAL
RER40F95R3&	95.3	5	F	NONINDUCTIVE	R	P	DAL
RER40F97R6&	97.6	5	F	NONINDUCTIVE	R	P	DAL
	Resistance	Power	Resistance		Level 1	Level 2	
Part Number	Value (Ohms)	Rating (W)	Tolerance	Winding	(FRL)(&)	(FRL)(&)	Manufacturer

RER40 Wirewound Resistors: 100 Ohms through 976 Ohms

	Resistance	Power	Resistance		Level 1	Level 2	
Part Number	Value (Ohms)	Rating (W)	Tolerance	Winding	(FRL)(&)	(FRL)(&)	Manufacturer
RER40F100R&	100	5	F	NONINDUCTIVE	R	P	DAL
RER40F102R&	102	5	F	NONINDUCTIVE	R	P	DAL
RER40F105R&	105	5	F	NONINDUCTIVE	R	P	DAL
RER40F107R&	107	5	F	NONINDUCTIVE	R	P	DAL
RER40F110R&	110	5	F	NONINDUCTIVE	R	P	DAL
RER40F113R&	113	5	F	NONINDUCTIVE	R	P	DAL
RER40F115R&	115	5	F	NONINDUCTIVE	R	P	DAL
RER40F118R&	118	5	F	NONINDUCTIVE	R	P	DAL
RER40F121R&	121	5	F	NONINDUCTIVE	R	P	DAL
RER40F124R&	124	5	F	NONINDUCTIVE	R	P	DAL
RER40F127R&	127	5	F	NONINDUCTIVE	R	P	DAL
RER40F130R&	130	5	F	NONINDUCTIVE	R	P	DAL
RER40F133R&	133	5	F	NONINDUCTIVE	R	P	DAL
RER40F137R&	137	5	F	NONINDUCTIVE	R	P	DAL
	Resistance	Power	Resistance		Level 1	Level 2	
Part Number	Value (Ohms)	Rating (W)	Tolerance	Winding	(FRL)(&)	(FRL)(&)	Manufacturer
RER40F140R&	140	5	F	NONINDUCTIVE	R	P	DAL
RER40F143R&	143	5	F	NONINDUCTIVE	R	P	DAL
RER40F147R&	147	5	F	NONINDUCTIVE	R	P	DAL

RER40F150R&	150	5	F	NONINDUCTIVE	R	P	DAL
RER40F154R&	154	5	F	NONINDUCTIVE	R	P	DAL
RER40F158R&	158	5	F	NONINDUCTIVE	R	P	DAL
RER40F162R&	162	5	F	NONINDUCTIVE	R	P	DAL
RER40F165R&	165	5	F	NONINDUCTIVE	R	P	DAL
RER40F169R&	169	5	F	NONINDUCTIVE	R	P	DAL
RER40F174R&	174	5	F	NONINDUCTIVE	R	P	DAL
RER40F178R&	178	5	F	NONINDUCTIVE	R	P	DAL
RER40F182R&	182	5	F	NONINDUCTIVE	R	P	DAL
RER40F187R&	187	5	F	NONINDUCTIVE	R	P	DAL
	Resistance	Power	Resistance		Level 1	Level 2	
Part Number	Value (Ohms)	Rating (W)	Tolerance	Winding	(FRL)(&)	(FRL)(&)	Manufacturer
RER40F191R&	191	5	F	NONINDUCTIVE	R	P	DAL
RER40F196R&	196	5	F	NONINDUCTIVE	R	P	DAL
RER40F200R&	200	5	F	NONINDUCTIVE	R	P	DAL
RER40F205R&	205	5	F	NONINDUCTIVE	R	P	DAL
RER40F210R&	210	5	F	NONINDUCTIVE	R	P	DAL
RER40F215R&	215	5	F	NONINDUCTIVE	R	P	DAL
RER40F221R&	221	5	F	NONINDUCTIVE	R	P	DAL
RER40F226R&	226	5	F	NONINDUCTIVE	R	P	DAL
RER40F232R&	232	5	F	NONINDUCTIVE	R	P	DAL
RER40F237R&	237	5	F	NONINDUCTIVE	R	P	DAL
RER40F243R&	243	5	F	NONINDUCTIVE	R	P	DAL
RER40F249R&	249	5	F	NONINDUCTIVE	R	P	DAL
RER40F255R&	255	5	F	NONINDUCTIVE	R	P	DAL
RER40F261R&	261	5	F	NONINDUCTIVE	R	P	DAL
	Resistance	Power	Resistance		Level 1	Level 2	
Part Number	Value (Ohms)	Rating (W)	Tolerance	Winding	(FRL)(&)	(FRL)(&)	Manufacturer
RER40F267R&	267	5	F	NONINDUCTIVE	R	P	DAL
RER40F274R&	274	5	F	NONINDUCTIVE	R	P	DAL
RER40F280R&	280	5	F	NONINDUCTIVE	R	P	DAL
RER40F287R&	287	5	F	NONINDUCTIVE	R	P	DAL
RER40F294R&	294	5	F	NONINDUCTIVE	R	P	DAL
RER40F301R&	301	5	F	NONINDUCTIVE	R	P	DAL
RER40F309R&	309	5	F	NONINDUCTIVE	R	P	DAL
RER40F316R&	316	5	F	NONINDUCTIVE	R	P	DAL
RER40F324R&	324	5	F	NONINDUCTIVE	R	P	DAL
RER40F332R&	332	5	F	NONINDUCTIVE	R	P	DAL
RER40F340R&	340	5	F	NONINDUCTIVE	R	P	DAL
RER40F348R&	348	5	F	NONINDUCTIVE	R	P	DAL
RER40F357R&	357	5	F	NONINDUCTIVE	R	P	DAL
	Resistance	Power	Resistance		Level 1	Level 2	
Part Number	Value (Ohms)	Rating (W)	Tolerance	Winding	(FRL)(&)	(FRL)(&)	Manufacturer
RER40F365R&	365	5	F	NONINDUCTIVE	R	P	DAL
RER40F374R&	374	5	F	NONINDUCTIVE	R	P	DAL
RER40F383R&	383	5	F	NONINDUCTIVE	R	P	DAL
RER40F392R&	392	5	F	NONINDUCTIVE	R	P	DAL

RER40F402R&	402	5	F	NONINDUCTIVE	R	P	DAL
RER40F412R&	412	5	F	NONINDUCTIVE	R	P	DAL
RER40F422R&	422	5	F	NONINDUCTIVE	R	P	DAL
RER40F432R&	432	5	F	NONINDUCTIVE	R	P	DAL
RER40F442R&	442	5	F	NONINDUCTIVE	R	P	DAL
RER40F453R&	453	5	F	NONINDUCTIVE	R	P	DAL
RER40F464R&	464	5	F	NONINDUCTIVE	R	P	DAL
RER40F475R&	475	5	F	NONINDUCTIVE	R	P	DAL
RER40F487R&	487	5	F	NONINDUCTIVE	R	P	DAL
RER40F499R&	499	5	F	NONINDUCTIVE	R	P	DAL
	Resistance	Power	Resistance		Level 1	Level 2	
Part Number	Value (Ohms)	Rating (W)	Tolerance	Winding	(FRL)(&)	(FRL)(&)	Manufacturer
RER40F511R&	511	5	F	NONINDUCTIVE	R	P	DAL
RER40F523R&	523	5	F	NONINDUCTIVE	R	P	DAL
RER40F536R&	536	5	F	NONINDUCTIVE	R	P	DAL
RER40F549R&	549	5	F	NONINDUCTIVE	R	P	DAL
RER40F562R&	562	5	F	NONINDUCTIVE	R	P	DAL
RER40F576R&	576	5	F	NONINDUCTIVE	R	P	DAL
RER40F590R&	590	5	F	NONINDUCTIVE	R	P	DAL
RER40F604R&	604	5	F	NONINDUCTIVE	R	P	DAL
RER40F619R&	619	5	F	NONINDUCTIVE	R	P	DAL
RER40F634R&	634	5	F	NONINDUCTIVE	R	P	DAL
RER40F649R&	649	5	F	NONINDUCTIVE	R	P	DAL
RER40F665R&	665	5	F	NONINDUCTIVE	R	P	DAL
RER40F681R&	681	5	F	NONINDUCTIVE	R	P	DAL
	Resistance	Power	Resistance		Level 1	Level 2	
Part Number	Value (Ohms)	Rating (W)	Tolerance	Winding	(FRL)(&)	(FRL)(&)	Manufacturer
RER40F698R&	698	5	F	NONINDUCTIVE	R	P	DAL
RER40F715R&	715	5	F	NONINDUCTIVE	R	P	DAL
RER40F732R&	732	5	F	NONINDUCTIVE	R	P	DAL
RER40F750R&	750	5	F	NONINDUCTIVE	R	P	DAL
RER40F768R&	768	5	F	NONINDUCTIVE	R	P	DAL
RER40F787R&	787	5	F	NONINDUCTIVE	R	P	DAL
RER40F806R&	806	5	F	NONINDUCTIVE	R	P	DAL
RER40F825R&	825	5	F	NONINDUCTIVE	R	P	DAL
RER40F845R&	845	5	F	NONINDUCTIVE	R	P	DAL
RER40F866R&	866	5	F	NONINDUCTIVE	R	P	DAL
RER40F887R&	887	5	F	NONINDUCTIVE	R	P	DAL
RER40F909R&	909	5	F	NONINDUCTIVE	R	P	DAL
RER40F931R&	931	5	F	NONINDUCTIVE	R	P	DAL
RER40F953R&	953	5	F	NONINDUCTIVE	R	P	DAL
RER40F976R&	976	5	F	NONINDUCTIVE	R	P	DAL
	Resistance	Power	Resistance		Level 1	Level 2	
Part Number	Value (Ohms)	Rating (W)	Tolerance	Winding	(FRL)(&)	(FRL)(&)	Manufacturer

	Resistance	Power	Resistance		Level 1	Level 2	
Part Number	Value (Ohms)	Rating (W)	Tolerance	Winding	(FRL)(&)	(FRL)(&)	Manufacturer
RER40F1001&	1,000	5	F	NONINDUCTIVE	R	P	DAL
RER40F1021&	1,020	5	F	NONINDUCTIVE	R	P	DAL
RER40F1051&	1,050	5	F	NONINDUCTIVE	R	P	DAL
RER40F1071&	1,070	5	F	NONINDUCTIVE	R	P	DAL
RER40F1101&	1,100	5	F	NONINDUCTIVE	R	P	DAL
RER40F1131&	1,130	5	F	NONINDUCTIVE	R	P	DAL
RER40F1151&	1,150	5	F	NONINDUCTIVE	R	P	DAL
RER40F1181&	1,180	5	F	NONINDUCTIVE	R	P	DAL
RER40F1211&	1,210	5	F	NONINDUCTIVE	R	P	DAL
RER40F1241&	1,240	5	F	NONINDUCTIVE	R	P	DAL
RER40F1271&	1,270	5	F	NONINDUCTIVE	R	P	DAL
RER40F1301&	1,300	5	F	NONINDUCTIVE	R	P	DAL
RER40F1331&	1,330	5	F	NONINDUCTIVE	R	P	DAL
RER40F1371&	1,370	5	F	NONINDUCTIVE	R	P	DAL
	Resistance	Power	Resistance		Level 1	Level 2	
Part Number	Value (Ohms)	Rating (W)	Tolerance	Winding	(FRL)(&)	(FRL)(&)	Manufacturer
RER40F1401&	1,400	5	F	NONINDUCTIVE	R	P	DAL
RER40F1431&	1,430	5	F	NONINDUCTIVE	R	P	DAL
RER40F1471&	1,470	5	F	NONINDUCTIVE	R	P	DAL
RER40F1501&	1,500	5	F	NONINDUCTIVE	R	P	DAL
RER40F1541&	1,540	5	F	NONINDUCTIVE	R	P	DAL
RER40F1581&	1,580	5	F	NONINDUCTIVE	R	P	DAL
RER40F1621&	1,620	5	F	NONINDUCTIVE	R	P	DAL
RER40F1651&	1,650	5	F	NONINDUCTIVE	R	P	DAL

RER45 Wirewound Resistors

	Resistance	Power	Resistance		Level 1	Level 2	
Part Number	Value (Ohms)	Rating (W)	Tolerance	Winding	(FRL)(&)	(FRL)(&)	Manufacturer
RER45F1R00&	1.00	10	F	NONINDUCTIVE	R	P	DAL
RER45F1R02&	1.02	10	F	NONINDUCTIVE	R	P	DAL
RER45F1R05&	1.05	10	F	NONINDUCTIVE	R	P	DAL
RER45F1R07&	1.07	10	F	NONINDUCTIVE	R	P	DAL
RER45F1R10&	1.10	10	F	NONINDUCTIVE	R	P	DAL
RER45F1R13&	1.13	10	F	NONINDUCTIVE	R	P	DAL
RER45F1R15&	1.15	10	F	NONINDUCTIVE	R	P	DAL
RER45F1R18&	1.18	10	F	NONINDUCTIVE	R	P	DAL
RER45F1R21&	1.21	10	F	NONINDUCTIVE	R	P	DAL
RER45F1R24&	1.24	10	F	NONINDUCTIVE	R	P	DAL
RER45F1R27&	1.27	10	F	NONINDUCTIVE	R	P	DAL
RER45F1R30&	1.30	10	F	NONINDUCTIVE	R	P	DAL
RER45F1R33&	1.33	10	F	NONINDUCTIVE	R	P	DAL

RER45F1R37&	1.37	10	F	NONINDUCTIVE	R	P	DAL
RER45F1R40&	1.40	10	F	NONINDUCTIVE	R	P	DAL
RER45F1R43&	1.43	10	F	NONINDUCTIVE	R	P	DAL
RER45F1R47&	1.47	10	F	NONINDUCTIVE	R	P	DAL
RER45F1R50&	1.50	10	F	NONINDUCTIVE	R	P	DAL
RER45F1R54&	1.54	10	F	NONINDUCTIVE	R	P	DAL
RER45F1R58&	1.58	10	F	NONINDUCTIVE	R	P	DAL
RER45F1R62&	1.62	10	F	NONINDUCTIVE	R	P	DAL
RER45F1R65&	1.65	10	F	NONINDUCTIVE	R	P	DAL
RER45F1R69&	1.69	10	F	NONINDUCTIVE	R	P	DAL
RER45F1R74&	1.74	10	F	NONINDUCTIVE	R	P	DAL
RER45F1R78&	1.78	10	F	NONINDUCTIVE	R	P	DAL
RER45F1R82&	1.82	10	F	NONINDUCTIVE	R	P	DAL
RER45F1R87&	1.87	10	F	NONINDUCTIVE	R	P	DAL
RER45F1R91&	1.91	10	F	NONINDUCTIVE	R	P	DAL
RER45F1R96&	1.96	10	F	NONINDUCTIVE	R	P	DAL
RER45F2R00&	2.00	10	F	NONINDUCTIVE	R	P	DAL
RER45F2R05&	2.05	10	F	NONINDUCTIVE	R	P	DAL
RER45F2R10&	2.10	10	F	NONINDUCTIVE	R	P	DAL
RER45F2R15&	2.15	10	F	NONINDUCTIVE	R	P	DAL
RER45F2R21&	2.21	10	F	NONINDUCTIVE	R	P	DAL
RER45F2R26&	2.26	10	F	NONINDUCTIVE	R	P	DAL
RER45F2R32&	2.32	10	F	NONINDUCTIVE	R	P	DAL
RER45F2R37&	2.37	10	F	NONINDUCTIVE	R	P	DAL
RER45F2R43&	2.43	10	F	NONINDUCTIVE	R	P	DAL
RER45F2R49&	2.49	10	F	NONINDUCTIVE	R	P	DAL
RER45F2R55&	2.55	10	F	NONINDUCTIVE	R	P	DAL
RER45F2R61&	2.61	10	F	NONINDUCTIVE	R	P	DAL
RER45F2R67&	2.67	10	F	NONINDUCTIVE	R	P	DAL
RER45F2R74&	2.74	10	F	NONINDUCTIVE	R	P	DAL
RER45F2R80&	2.80	10	F	NONINDUCTIVE	R	P	DAL
RER45F2R87&	2.87	10	F	NONINDUCTIVE	R	P	DAL
RER45F2R94&	2.94	10	F	NONINDUCTIVE	R	P	DAL
RER45F3R01&	3.01	10	F	NONINDUCTIVE	R	P	DAL
RER45F3R09&	3.09	10	F	NONINDUCTIVE	R	P	DAL
RER45F3R16&	3.16	10	F	NONINDUCTIVE	R	P	DAL
RER45F3R24&	3.24	10	F	NONINDUCTIVE	R	P	DAL
RER45F3R32&	3.32	10	F	NONINDUCTIVE	R	P	DAL
RER45F3R40&	3.40	10	F	NONINDUCTIVE	R	P	DAL
RER45F3R48&	3.48	10	F	NONINDUCTIVE	R	P	DAL
RER45F3R57&	3.57	10	F	NONINDUCTIVE	R	P	DAL
RER45F3R65&	3.65	10	F	NONINDUCTIVE	R	P	DAL
RER45F3R74&	3.74	10	F	NONINDUCTIVE	R	P	DAL
RER45F3R83&	3.83	10	F	NONINDUCTIVE	R	P	DAL
RER45F3R92&	3.92	10	F	NONINDUCTIVE	R	P	DAL
RER45F4R02&	4.02	10	F	NONINDUCTIVE	R	P	DAL
RER45F4R12&	4.12	10	F	NONINDUCTIVE	R	P	DAL

RER45F4R22&	4.22	10	F	NONINDUCTIVE	R	P	DAL
RER45F4R32&	4.32	10	F	NONINDUCTIVE	R	P	DAL
RER45F4R42&	4.42	10	F	NONINDUCTIVE	R	P	DAL
RER45F4R53&	4.53	10	F	NONINDUCTIVE	R	P	DAL
RER45F4R64&	4.64	10	F	NONINDUCTIVE	R	P	DAL
RER45F4R75&	4.75	10	F	NONINDUCTIVE	R	P	DAL
RER45F4R87&	4.87	10	F	NONINDUCTIVE	R	P	DAL
RER45F4R99&	4.99	10	F	NONINDUCTIVE	R	P	DAL
RER45F5R11&	5.11	10	F	NONINDUCTIVE	R	P	DAL
RER45F5R23&	5.23	10	F	NONINDUCTIVE	R	P	DAL
RER45F5R36&	5.36	10	F	NONINDUCTIVE	R	P	DAL
RER45F5R49&	5.49	10	F	NONINDUCTIVE	R	P	DAL
RER45F5R62&	5.62	10	F	NONINDUCTIVE	R	P	DAL
RER45F5R76&	5.76	10	F	NONINDUCTIVE	R	P	DAL
RER45F5R90&	5.90	10	F	NONINDUCTIVE	R	P	DAL
RER45F6R04&	6.04	10	F	NONINDUCTIVE	R	P	DAL
RER45F6R19&	6.19	10	F	NONINDUCTIVE	R	P	DAL
RER45F6R34&	6.34	10	F	NONINDUCTIVE	R	P	DAL
RER45F6R49&	6.49	10	F	NONINDUCTIVE	R	P	DAL
RER45F6R65&	6.65	10	F	NONINDUCTIVE	R	P	DAL
RER45F6R81&	6.81	10	F	NONINDUCTIVE	R	P	DAL
RER45F6R98&	6.98	10	F	NONINDUCTIVE	R	P	DAL
RER45F7R15&	7.15	10	F	NONINDUCTIVE	R	P	DAL
RER45F7R32&	7.32	10	F	NONINDUCTIVE	R	P	DAL
RER45F7R50&	7.50	10	F	NONINDUCTIVE	R	P	DAL
RER45F7R68&	7.68	10	F	NONINDUCTIVE	R	P	DAL
RER45F7R87&	7.87	10	F	NONINDUCTIVE	R	P	DAL
RER45F8R06&	8.06	10	F	NONINDUCTIVE	R	P	DAL
RER45F8R25&	8.25	10	F	NONINDUCTIVE	R	P	DAL
RER45F8R45&	8.45	10	F	NONINDUCTIVE	R	P	DAL
RER45F8R66&	8.66	10	F	NONINDUCTIVE	R	P	DAL
RER45F8R87&	8.87	10	F	NONINDUCTIVE	R	P	DAL
RER45F9R09&	9.09	10	F	NONINDUCTIVE	R	P	DAL
RER45F9R31&	9.31	10	F	NONINDUCTIVE	R	P	DAL
RER45F9R53&	9.53	10	F	NONINDUCTIVE	R	P	DAL
RER45F9R76&	9.76	10	F	NONINDUCTIVE	R	P	DAL
RER45F10R0&	10.0	10	F	NONINDUCTIVE	R	P	DAL
RER45F10R2&	10.2	10	F	NONINDUCTIVE	R	P	DAL
RER45F10R5&	10.5	10	F	NONINDUCTIVE	R	P	DAL
RER45F10R7&	10.7	10	F	NONINDUCTIVE	R	P	DAL
RER45F11R0&	11.0	10	F	NONINDUCTIVE	R	P	DAL
RER45F11R3&	11.3	10	F	NONINDUCTIVE	R	P	DAL
RER45F11R5&	11.5	10	F	NONINDUCTIVE	R	P	DAL
RER45F11R8&	11.8	10	F	NONINDUCTIVE	R	P	DAL
RER45F12R1&	12.1	10	F	NONINDUCTIVE	R	P	DAL
RER45F12R4&	12.4	10	F	NONINDUCTIVE	R	P	DAL
RER45F12R7&	12.7	10	F	NONINDUCTIVE	R	P	DAL

RER45F13R0&	13.0	10	F	NONINDUCTIVE	R	P	DAL
RER45F13R3&	13.3	10	F	NONINDUCTIVE	R	P	DAL
RER45F13R7&	13.7	10	F	NONINDUCTIVE	R	P	DAL
RER45F14R0&	14.0	10	F	NONINDUCTIVE	R	P	DAL
RER45F14R3&	14.3	10	F	NONINDUCTIVE	R	P	DAL
RER45F14R7&	14.7	10	F	NONINDUCTIVE	R	P	DAL
RER45F15R0&	15.0	10	F	NONINDUCTIVE	R	P	DAL
RER45F15R4&	15.4	10	F	NONINDUCTIVE	R	P	DAL
RER45F15R8&	15.8	10	F	NONINDUCTIVE	R	P	DAL
RER45F16R2&	16.2	10	F	NONINDUCTIVE	R	P	DAL
RER45F16R5&	16.5	10	F	NONINDUCTIVE	R	P	DAL
RER45F16R9&	16.9	10	F	NONINDUCTIVE	R	P	DAL
RER45F17R4&	17.4	10	F	NONINDUCTIVE	R	P	DAL
RER45F17R8&	17.8	10	F	NONINDUCTIVE	R	P	DAL
RER45F18R2&	18.2	10	F	NONINDUCTIVE	R	P	DAL
RER45F18R7&	18.7	10	F	NONINDUCTIVE	R	P	DAL
RER45F19R1&	19.1	10	F	NONINDUCTIVE	R	P	DAL
RER45F19R6&	19.6	10	F	NONINDUCTIVE	R	P	DAL
RER45F20R0&	20.0	10	F	NONINDUCTIVE	R	P	DAL
RER45F20R5&	20.5	10	F	NONINDUCTIVE	R	P	DAL
RER45F21R0&	21.0	10	F	NONINDUCTIVE	R	P	DAL
RER45F21R5&	21.5	10	F	NONINDUCTIVE	R	P	DAL
RER45F22R1&	22.1	10	F	NONINDUCTIVE	R	P	DAL
RER45F22R6&	22.6	10	F	NONINDUCTIVE	R	P	DAL
RER45F23R2&	23.2	10	F	NONINDUCTIVE	R	P	DAL
RER45F23R7&	23.7	10	F	NONINDUCTIVE	R	P	DAL
RER45F24R3&	24.3	10	F	NONINDUCTIVE	R	P	DAL
RER45F24R9&	24.9	10	F	NONINDUCTIVE	R	P	DAL
RER45F25R5&	25.5	10	F	NONINDUCTIVE	R	P	DAL
RER45F26R1&	26.1	10	F	NONINDUCTIVE	R	P	DAL
RER45F26R7&	26.7	10	F	NONINDUCTIVE	R	P	DAL
RER45F27R4&	27.4	10	F	NONINDUCTIVE	R	P	DAL
RER45F28R0&	28.0	10	F	NONINDUCTIVE	R	P	DAL
RER45F28R7&	28.7	10	F	NONINDUCTIVE	R	P	DAL
RER45F29R4&	29.4	10	F	NONINDUCTIVE	R	P	DAL
RER45F30R1&	30.1	10	F	NONINDUCTIVE	R	P	DAL
RER45F30R9&	30.9	10	F	NONINDUCTIVE	R	P	DAL
RER45F31R6&	31.6	10	F	NONINDUCTIVE	R	P	DAL
RER45F32R4&	32.4	10	F	NONINDUCTIVE	R	P	DAL
RER45F33R2&	33.2	10	F	NONINDUCTIVE	R	P	DAL
RER45F34R0&	34.0	10	F	NONINDUCTIVE	R	P	DAL
RER45F34R8&	34.8	10	F	NONINDUCTIVE	R	P	DAL
RER45F35R7&	35.7	10	F	NONINDUCTIVE	R	P	DAL
RER45F36R5&	36.5	10	F	NONINDUCTIVE	R	P	DAL
RER45F37R4&	37.4	10	F	NONINDUCTIVE	R	P	DAL
RER45F38R3&	38.3	10	F	NONINDUCTIVE	R	P	DAL
RER45F39R2&	39.2	10	F	NONINDUCTIVE	R	P	DAL

RER45F40R2&	40.2	10	F	NONINDUCTIVE	R	P	DAL
RER45F41R2&	41.2	10	F	NONINDUCTIVE	R	P	DAL
RER45F42R2&	42.2	10	F	NONINDUCTIVE	R	P	DAL
RER45F43R2&	43.2	10	F	NONINDUCTIVE	R	P	DAL
RER45F44R2&	44.2	10	F	NONINDUCTIVE	R	P	DAL
RER45F45R3&	45.3	10	F	NONINDUCTIVE	R	P	DAL
RER45F46R4&	46.4	10	F	NONINDUCTIVE	R	P	DAL
RER45F47R5&	47.5	10	F	NONINDUCTIVE	R	P	DAL
RER45F48R7&	48.7	10	F	NONINDUCTIVE	R	P	DAL
RER45F49R9&	49.9	10	F	NONINDUCTIVE	R	P	DAL
RER45F51R1&	51.1	10	F	NONINDUCTIVE	R	P	DAL
RER45F52R3&	52.3	10	F	NONINDUCTIVE	R	P	DAL
RER45F53R6&	53.6	10	F	NONINDUCTIVE	R	P	DAL
RER45F54R9&	54.9	10	F	NONINDUCTIVE	R	P	DAL
RER45F56R2&	56.2	10	F	NONINDUCTIVE	R	P	DAL
RER45F57R6&	57.6	10	F	NONINDUCTIVE	R	P	DAL
RER45F59R0&	59.0	10	F	NONINDUCTIVE	R	P	DAL
RER45F60R4&	60.4	10	F	NONINDUCTIVE	R	P	DAL
RER45F61R9&	61.9	10	F	NONINDUCTIVE	R	P	DAL
RER45F63R4&	63.4	10	F	NONINDUCTIVE	R	P	DAL
RER45F64R9&	64.9	10	F	NONINDUCTIVE	R	P	DAL
RER45F66R5&	66.5	10	F	NONINDUCTIVE	R	P	DAL
RER45F68R1&	68.1	10	F	NONINDUCTIVE	R	P	DAL
RER45F69R8&	69.8	10	F	NONINDUCTIVE	R	P	DAL
RER45F71R5&	71.5	10	F	NONINDUCTIVE	R	P	DAL
RER45F73R2&	73.2	10	F	NONINDUCTIVE	R	P	DAL
RER45F75R0&	75.0	10	F	NONINDUCTIVE	R	P	DAL
RER45F76R8&	76.8	10	F	NONINDUCTIVE	R	P	DAL
RER45F78R7&	78.7	10	F	NONINDUCTIVE	R	P	DAL
RER45F80R6&	80.6	10	F	NONINDUCTIVE	R	P	DAL
RER45F82R5&	82.5	10	F	NONINDUCTIVE	R	P	DAL
RER45F84R5&	84.5	10	F	NONINDUCTIVE	R	P	DAL
RER45F86R6&	86.6	10	F	NONINDUCTIVE	R	P	DAL
RER45F88R7&	88.7	10	F	NONINDUCTIVE	R	P	DAL
RER45F90R9&	90.9	10	F	NONINDUCTIVE	R	P	DAL
RER45F93R1&	93.1	10	F	NONINDUCTIVE	R	P	DAL
RER45F95R3&	95.3	10	F	NONINDUCTIVE	R	P	DAL
RER45F97R6&	97.6	10	F	NONINDUCTIVE	R	P	DAL
RER45F100R&	100	10	F	NONINDUCTIVE	R	P	DAL
RER45F102R&	102	10	F	NONINDUCTIVE	R	P	DAL
RER45F105R&	105	10	F	NONINDUCTIVE	R	P	DAL
RER45F107R&	107	10	F	NONINDUCTIVE	R	P	DAL
RER45F110R&	110	10	F	NONINDUCTIVE	R	P	DAL
RER45F113R&	113	10	F	NONINDUCTIVE	R	P	DAL
RER45F115R&	115	10	F	NONINDUCTIVE	R	P	DAL
RER45F118R&	118	10	F	NONINDUCTIVE	R	P	DAL
RER45F121R&	121	10	F	NONINDUCTIVE	R	P	DAL

RER45F124R&	124	10	F	NONINDUCTIVE	R	P	DAL
RER45F127R&	127	10	F	NONINDUCTIVE	R	P	DAL
RER45F130R&	130	10	F	NONINDUCTIVE	R	P	DAL
RER45F133R&	133	10	F	NONINDUCTIVE	R	P	DAL
RER45F137R&	137	10	F	NONINDUCTIVE	R	P	DAL
RER45F140R&	140	10	F	NONINDUCTIVE	R	P	DAL
RER45F143R&	143	10	F	NONINDUCTIVE	R	P	DAL
RER45F147R&	147	10	F	NONINDUCTIVE	R	P	DAL
RER45F150R&	150	10	F	NONINDUCTIVE	R	P	DAL
RER45F154R&	154	10	F	NONINDUCTIVE	R	P	DAL
RER45F158R&	158	10	F	NONINDUCTIVE	R	P	DAL
RER45F162R&	162	10	F	NONINDUCTIVE	R	P	DAL
RER45F165R&	165	10	F	NONINDUCTIVE	R	P	DAL
RER45F169R&	169	10	F	NONINDUCTIVE	R	P	DAL
RER45F174R&	174	10	F	NONINDUCTIVE	R	P	DAL
RER45F178R&	178	10	F	NONINDUCTIVE	R	P	DAL
RER45F182R&	182	10	F	NONINDUCTIVE	R	P	DAL
RER45F187R&	187	10	F	NONINDUCTIVE	R	P	DAL
RER45F191R&	191	10	F	NONINDUCTIVE	R	P	DAL
RER45F196R&	196	10	F	NONINDUCTIVE	R	P	DAL
RER45F200R&	200	10	F	NONINDUCTIVE	R	P	DAL
RER45F205R&	205	10	F	NONINDUCTIVE	R	P	DAL
RER45F210R&	210	10	F	NONINDUCTIVE	R	P	DAL
RER45F215R&	215	10	F	NONINDUCTIVE	R	P	DAL
RER45F221R&	221	10	F	NONINDUCTIVE	R	P	DAL
RER45F226R&	226	10	F	NONINDUCTIVE	R	P	DAL
RER45F232R&	232	10	F	NONINDUCTIVE	R	P	DAL
RER45F237R&	237	10	F	NONINDUCTIVE	R	P	DAL
RER45F243R&	243	10	F	NONINDUCTIVE	R	P	DAL
RER45F249R&	249	10	F	NONINDUCTIVE	R	P	DAL
RER45F255R&	255	10	F	NONINDUCTIVE	R	P	DAL
RER45F261R&	261	10	F	NONINDUCTIVE	R	P	DAL
RER45F267R&	267	10	F	NONINDUCTIVE	R	P	DAL
RER45F274R&	274	10	F	NONINDUCTIVE	R	P	DAL
RER45F280R&	280	10	F	NONINDUCTIVE	R	P	DAL
RER45F287R&	287	10	F	NONINDUCTIVE	R	P	DAL
RER45F294R&	294	10	F	NONINDUCTIVE	R	P	DAL
RER45F301R&	301	10	F	NONINDUCTIVE	R	P	DAL
RER45F309R&	309	10	F	NONINDUCTIVE	R	P	DAL
RER45F316R&	316	10	F	NONINDUCTIVE	R	P	DAL
RER45F324R&	324	10	F	NONINDUCTIVE	R	P	DAL
RER45F332R&	332	10	F	NONINDUCTIVE	R	P	DAL
RER45F340R&	340	10	F	NONINDUCTIVE	R	P	DAL
RER45F348R&	348	10	F	NONINDUCTIVE	R	P	DAL
RER45F357R&	357	10	F	NONINDUCTIVE	R	P	DAL
RER45F365R&	365	10	F	NONINDUCTIVE	R	P	DAL
RER45F374R&	374	10	F	NONINDUCTIVE	R	P	DAL

RER45F383R&	383	10	F	NONINDUCTIVE	R	P	DAL
RER45F392R&	392	10	F	NONINDUCTIVE	R	P	DAL
RER45F402R&	402	10	F	NONINDUCTIVE	R	P	DAL
RER45F412R&	412	10	F	NONINDUCTIVE	R	P	DAL
RER45F422R&	422	10	F	NONINDUCTIVE	R	P	DAL
RER45F432R&	432	10	F	NONINDUCTIVE	R	P	DAL
RER45F442R&	442	10	F	NONINDUCTIVE	R	P	DAL
RER45F453R&	453	10	F	NONINDUCTIVE	R	P	DAL
RER45F464R&	464	10	F	NONINDUCTIVE	R	P	DAL
RER45F475R&	475	10	F	NONINDUCTIVE	R	P	DAL
RER45F487R&	487	10	F	NONINDUCTIVE	R	P	DAL
RER45F499R&	499	10	F	NONINDUCTIVE	R	P	DAL
RER45F511R&	511	10	F	NONINDUCTIVE	R	P	DAL
RER45F523R&	523	10	F	NONINDUCTIVE	R	P	DAL
RER45F536R&	536	10	F	NONINDUCTIVE	R	P	DAL
RER45F549R&	549	10	F	NONINDUCTIVE	R	P	DAL
RER45F562R&	562	10	F	NONINDUCTIVE	R	P	DAL
RER45F576R&	576	10	F	NONINDUCTIVE	R	P	DAL
RER45F590R&	590	10	F	NONINDUCTIVE	R	P	DAL
RER45F604R&	604	10	F	NONINDUCTIVE	R	P	DAL
RER45F619R&	619	10	F	NONINDUCTIVE	R	P	DAL
RER45F634R&	634	10	F	NONINDUCTIVE	R	P	DAL
RER45F649R&	649	10	F	NONINDUCTIVE	R	P	DAL
RER45F665R&	665	10	F	NONINDUCTIVE	R	P	DAL
RER45F681R&	681	10	F	NONINDUCTIVE	R	P	DAL
RER45F698R&	698	10	F	NONINDUCTIVE	R	P	DAL
RER45F715R&	715	10	F	NONINDUCTIVE	R	P	DAL
RER45F732R&	732	10	F	NONINDUCTIVE	R	P	DAL
RER45F750R&	750	10	F	NONINDUCTIVE	R	P	DAL
RER45F768R&	768	10	F	NONINDUCTIVE	R	P	DAL
RER45F787R&	787	10	F	NONINDUCTIVE	R	P	DAL
RER45F806R&	806	10	F	NONINDUCTIVE	R	P	DAL
RER45F825R&	825	10	F	NONINDUCTIVE	R	P	DAL
RER45F845R&	845	10	F	NONINDUCTIVE	R	P	DAL
RER45F866R&	866	10	F	NONINDUCTIVE	R	P	DAL
RER45F887R&	887	10	F	NONINDUCTIVE	R	P	DAL
RER45F909R&	909	10	F	NONINDUCTIVE	R	P	DAL
RER45F931R&	931	10	F	NONINDUCTIVE	R	P	DAL
RER45F953R&	953	10	F	NONINDUCTIVE	R	P	DAL
RER45F976R&	976	10	F	NONINDUCTIVE	R	P	DAL
RER45F1001&	1,000	10	F	NONINDUCTIVE	R	P	DAL
RER45F1021&	1,020	10	F	NONINDUCTIVE	R	P	DAL
RER45F1051&	1,050	10	F	NONINDUCTIVE	R	P	DAL
RER45F1071&	1,070	10	F	NONINDUCTIVE	R	P	DAL
RER45F1101&	1,100	10	F	NONINDUCTIVE	R	P	DAL
RER45F1131&	1,130	10	F	NONINDUCTIVE	R	P	DAL
RER45F1151&	1,150	10	F	NONINDUCTIVE	R	P	DAL

RER45F1181&	1,180	10	F	NONINDUCTIVE	R	P	DAL
RER45F1211&	1,210	10	F	NONINDUCTIVE	R	P	DAL
RER45F1241&	1,240	10	F	NONINDUCTIVE	R	P	DAL
RER45F1271&	1,270	10	F	NONINDUCTIVE	R	P	DAL
RER45F1301&	1,300	10	F	NONINDUCTIVE	R	P	DAL
RER45F1331&	1,330	10	F	NONINDUCTIVE	R	P	DAL
RER45F1371&	1,370	10	F	NONINDUCTIVE	R	P	DAL
RER45F1401&	1,400	10	F	NONINDUCTIVE	R	P	DAL
RER45F1431&	1,430	10	F	NONINDUCTIVE	R	P	DAL
RER45F1471&	1,470	10	F	NONINDUCTIVE	R	P	DAL
RER45F1501&	1,500	10	F	NONINDUCTIVE	R	P	DAL
RER45F1541&	1,540	10	F	NONINDUCTIVE	R	P	DAL
RER45F1581&	1,580	10	F	NONINDUCTIVE	R	P	DAL
RER45F1621&	1,620	10	F	NONINDUCTIVE	R	P	DAL
RER45F1651&	1,650	10	F	NONINDUCTIVE	R	P	DAL
RER45F1691&	1,690	10	F	NONINDUCTIVE	R	P	DAL
RER45F1741&	1,740	10	F	NONINDUCTIVE	R	P	DAL
RER45F1781&	1,780	10	F	NONINDUCTIVE	R	P	DAL
RER45F1821&	1,820	10	F	NONINDUCTIVE	R	P	DAL
RER45F1871&	1,870	10	F	NONINDUCTIVE	R	P	DAL
RER45F1911&	1,910	10	F	NONINDUCTIVE	R	P	DAL
RER45F1961&	1,960	10	F	NONINDUCTIVE	R	P	DAL
RER45F2001&	2,000	10	F	NONINDUCTIVE	R	P	DAL
RER45F2051&	2,050	10	F	NONINDUCTIVE	R	P	DAL
RER45F2101&	2,100	10	F	NONINDUCTIVE	R	P	DAL
RER45F2151&	2,150	10	F	NONINDUCTIVE	R	P	DAL
RER45F2211&	2,210	10	F	NONINDUCTIVE	R	P	DAL
RER45F2261&	2,260	10	F	NONINDUCTIVE	R	P	DAL
RER45F2321&	2,320	10	F	NONINDUCTIVE	R	P	DAL
RER45F2371&	2,370	10	F	NONINDUCTIVE	R	P	DAL
RER45F2431&	2,430	10	F	NONINDUCTIVE	R	P	DAL
RER45F2491&	2,490	10	F	NONINDUCTIVE	R	P	DAL
RER45F2551&	2,550	10	F	NONINDUCTIVE	R	P	DAL
RER45F2611&	2,610	10	F	NONINDUCTIVE	R	P	DAL
RER45F2671&	2,670	10	F	NONINDUCTIVE	R	P	DAL
RER45F2741&	2,740	10	F	NONINDUCTIVE	R	P	DAL
RER45F2801&	2,800	10	F	NONINDUCTIVE	R	P	DAL

RER45 RESISTORS DECADE BREAKDOWN

Click on the link below to see the associated parts selection listing:

Resistance Range
1.00 Ohms through 9.76 Ohms
10.0 Ohms through 97.6 Ohms
100 Ohms through 976 Ohms

RER45 Wirewound Resistors: 1.00 Ohms through 9.76 Ohms

	Resistance	Power	Resistance		Level 1	Level 2	
Part Number	Value (Ohms)	Rating (W)	Tolerance	Winding	(FRL)(&)	(FRL)(&)	Manufacturer
RER45F1R00&	1.00	10	F	NONINDUCTIVE	R	P	DAL
RER45F1R02&	1.02	10	F	NONINDUCTIVE	R	P	DAL
RER45F1R05&	1.05	10	F	NONINDUCTIVE	R	P	DAL
RER45F1R07&	1.07	10	F	NONINDUCTIVE	R	P	DAL
RER45F1R10&	1.10	10	F	NONINDUCTIVE	R	P	DAL
RER45F1R13&	1.13	10	F	NONINDUCTIVE	R	P	DAL
RER45F1R15&	1.15	10	F	NONINDUCTIVE	R	P	DAL
RER45F1R18&	1.18	10	F	NONINDUCTIVE	R	P	DAL
RER45F1R21&	1.21	10	F	NONINDUCTIVE	R	P	DAL
RER45F1R24&	1.24	10	F	NONINDUCTIVE	R	P	DAL
RER45F1R27&	1.27	10	F	NONINDUCTIVE	R	P	DAL
RER45F1R30&	1.30	10	F	NONINDUCTIVE	R	P	DAL
RER45F1R33&	1.33	10	F	NONINDUCTIVE	R	P	DAL
RER45F1R37&	1.37	10	F	NONINDUCTIVE	R	P	DAL
	Resistance	Power	Resistance		Level 1	Level 2	
Part Number	Value (Ohms)	Rating (W)	Tolerance	Winding	(FRL)(&)	(FRL)(&)	Manufacturer
RER45F1R40&	1.40	10	F	NONINDUCTIVE	R	P	DAL
RER45F1R43&	1.43	10	F	NONINDUCTIVE	R	P	DAL
RER45F1R47&	1.47	10	F	NONINDUCTIVE	R	P	DAL
RER45F1R50&	1.50	10	F	NONINDUCTIVE	R	P	DAL
RER45F1R54&	1.54	10	F	NONINDUCTIVE	R	P	DAL
RER45F1R58&	1.58	10	F	NONINDUCTIVE	R	P	DAL
RER45F1R62&	1.62	10	F	NONINDUCTIVE	R	P	DAL
RER45F1R65&	1.65	10	F	NONINDUCTIVE	R	P	DAL
RER45F1R69&	1.69	10	F	NONINDUCTIVE	R	P	DAL
RER45F1R74&	1.74	10	F	NONINDUCTIVE	R	P	DAL
RER45F1R78&	1.78	10	F	NONINDUCTIVE	R	P	DAL
RER45F1R82&	1.82	10	F	NONINDUCTIVE	R	P	DAL
RER45F1R87&	1.87	10	F	NONINDUCTIVE	R	P	DAL
	Resistance	Power	Resistance		Level 1	Level 2	
Part Number	Value (Ohms)	Rating (W)	Tolerance	Winding	(FRL)(&)	(FRL)(&)	Manufacturer
RER45F1R91&	1.91	10	F	NONINDUCTIVE	R	P	DAL
RER45F1R96&	1.96	10	F	NONINDUCTIVE	R	P	DAL
RER45F2R00&	2.00	10	F	NONINDUCTIVE	R	P	DAL
RER45F2R05&	2.05	10	F	NONINDUCTIVE	R	P	DAL
RER45F2R10&	2.10	10	F	NONINDUCTIVE	R	P	DAL
RER45F2R15&	2.15	10	F	NONINDUCTIVE	R	P	DAL
RER45F2R21&	2.21	10	F	NONINDUCTIVE	R	P	DAL
RER45F2R26&	2.26	10	F	NONINDUCTIVE	R	P	DAL

RER45F2R32&	2.32	10	F	NONINDUCTIVE	R	P	DAL
RER45F2R37&	2.37	10	F	NONINDUCTIVE	R	P	DAL
RER45F2R43&	2.43	10	F	NONINDUCTIVE	R	P	DAL
RER45F2R49&	2.49	10	F	NONINDUCTIVE	R	P	DAL
RER45F2R55&	2.55	10	F	NONINDUCTIVE	R	P	DAL
RER45F2R61&	2.61	10	F	NONINDUCTIVE	R	P	DAL
	Resistance	Power	Resistance		Level 1	Level 2	
Part Number	Value (Ohms)	Rating (W)	Tolerance	Winding	(FRL)(&)	(FRL)(&)	Manufacturer
RER45F2R67&	2.67	10	F	NONINDUCTIVE	R	P	DAL
RER45F2R74&	2.74	10	F	NONINDUCTIVE	R	P	DAL
RER45F2R80&	2.80	10	F	NONINDUCTIVE	R	P	DAL
RER45F2R87&	2.87	10	F	NONINDUCTIVE	R	P	DAL
RER45F2R94&	2.94	10	F	NONINDUCTIVE	R	P	DAL
RER45F3R01&	3.01	10	F	NONINDUCTIVE	R	P	DAL
RER45F3R09&	3.09	10	F	NONINDUCTIVE	R	P	DAL
RER45F3R16&	3.16	10	F	NONINDUCTIVE	R	P	DAL
RER45F3R24&	3.24	10	F	NONINDUCTIVE	R	P	DAL
RER45F3R32&	3.32	10	F	NONINDUCTIVE	R	P	DAL
RER45F3R40&	3.40	10	F	NONINDUCTIVE	R	P	DAL
RER45F3R48&	3.48	10	F	NONINDUCTIVE	R	P	DAL
RER45F3R57&	3.57	10	F	NONINDUCTIVE	R	P	DAL
	Resistance	Power	Resistance		Level 1	Level 2	
Part Number	Value (Ohms)	Rating (W)	Tolerance	Winding	(FRL)(&)	(FRL)(&)	Manufacturer
RER45F3R65&	3.65	10	F	NONINDUCTIVE	R	P	DAL
RER45F3R74&	3.74	10	F	NONINDUCTIVE	R	P	DAL
RER45F3R83&	3.83	10	F	NONINDUCTIVE	R	P	DAL
RER45F3R92&	3.92	10	F	NONINDUCTIVE	R	P	DAL
RER45F4R02&	4.02	10	F	NONINDUCTIVE	R	P	DAL
RER45F4R12&	4.12	10	F	NONINDUCTIVE	R	P	DAL
RER45F4R22&	4.22	10	F	NONINDUCTIVE	R	P	DAL
RER45F4R32&	4.32	10	F	NONINDUCTIVE	R	P	DAL
RER45F4R42&	4.42	10	F	NONINDUCTIVE	R	P	DAL
RER45F4R53&	4.53	10	F	NONINDUCTIVE	R	P	DAL
RER45F4R64&	4.64	10	F	NONINDUCTIVE	R	P	DAL
RER45F4R75&	4.75	10	F	NONINDUCTIVE	R	P	DAL
RER45F4R87&	4.87	10	F	NONINDUCTIVE	R	P	DAL
RER45F4R99&	4.99	10	F	NONINDUCTIVE	R	P	DAL
	Resistance	Power	Resistance		Level 1	Level 2	
Part Number	Value (Ohms)	Rating (W)	Tolerance	Winding	(FRL)(&)	(FRL)(&)	Manufacturer
RER45F5R11&	5.11	10	F	NONINDUCTIVE	R	P	DAL
RER45F5R23&	5.23	10	F	NONINDUCTIVE	R	P	DAL
RER45F5R36&	5.36	10	F	NONINDUCTIVE	R	P	DAL
RER45F5R49&	5.49	10	F	NONINDUCTIVE	R	P	DAL
RER45F5R62&	5.62	10	F	NONINDUCTIVE	R	P	DAL
RER45F5R76&	5.76	10	F	NONINDUCTIVE	R	P	DAL
RER45F5R90&	5.90	10	F	NONINDUCTIVE	R	P	DAL
RER45F6R04&	6.04	10	F	NONINDUCTIVE	R	P	DAL

RER45F6R19&	6.19	10	F	NONINDUCTIVE	R	P	DAL
RER45F6R34&	6.34	10	F	NONINDUCTIVE	R	P	DAL
RER45F6R49&	6.49	10	F	NONINDUCTIVE	R	P	DAL
RER45F6R65&	6.65	10	F	NONINDUCTIVE	R	P	DAL
RER45F6R81&	6.81	10	F	NONINDUCTIVE	R	P	DAL
	Resistance	Power	Resistance		Level 1	Level 2	
Part Number	Value (Ohms)	Rating (W)	Tolerance	Winding	(FRL)(&)	(FRL)(&)	Manufacturer
RER45F6R98&	6.98	10	F	NONINDUCTIVE	R	P	DAL
RER45F7R15&	7.15	10	F	NONINDUCTIVE	R	P	DAL
RER45F7R32&	7.32	10	F	NONINDUCTIVE	R	P	DAL
RER45F7R50&	7.50	10	F	NONINDUCTIVE	R	P	DAL
RER45F7R68&	7.68	10	F	NONINDUCTIVE	R	P	DAL
RER45F7R87&	7.87	10	F	NONINDUCTIVE	R	P	DAL
RER45F8R06&	8.06	10	F	NONINDUCTIVE	R	P	DAL
RER45F8R25&	8.25	10	F	NONINDUCTIVE	R	P	DAL
RER45F8R45&	8.45	10	F	NONINDUCTIVE	R	P	DAL
RER45F8R66&	8.66	10	F	NONINDUCTIVE	R	P	DAL
RER45F8R87&	8.87	10	F	NONINDUCTIVE	R	P	DAL
RER45F9R09&	9.09	10	F	NONINDUCTIVE	R	P	DAL
RER45F9R31&	9.31	10	F	NONINDUCTIVE	R	P	DAL
RER45F9R53&	9.53	10	F	NONINDUCTIVE	R	P	DAL
RER45F9R76&	9.76	10	F	NONINDUCTIVE	R	P	DAL
	Resistance	Power	Resistance		Level 1	Level 2	
Part Number	Value (Ohms)	Rating (W)	Tolerance	Winding	(FRL)(&)	(FRL)(&)	Manufacturer

RER45 Wirewound Resistors: 10.0 Ohms through 97.6 Ohms

	Resistance	Power	Resistance		Level 1	Level 2	
Part Number	Value (Ohms)	Rating (W)	Tolerance	Winding	(FRL)(&)	(FRL)(&)	Manufacturer
RER45F10R0&	10.0	10	F	NONINDUCTIVE	R	P	DAL
RER45F10R2&	10.2	10	F	NONINDUCTIVE	R	P	DAL
RER45F10R5&	10.5	10	F	NONINDUCTIVE	R	P	DAL
RER45F10R7&	10.7	10	F	NONINDUCTIVE	R	P	DAL
RER45F11R0&	11.0	10	F	NONINDUCTIVE	R	P	DAL
RER45F11R3&	11.3	10	F	NONINDUCTIVE	R	P	DAL
RER45F11R5&	11.5	10	F	NONINDUCTIVE	R	P	DAL
RER45F11R8&	11.8	10	F	NONINDUCTIVE	R	P	DAL
RER45F12R1&	12.1	10	F	NONINDUCTIVE	R	P	DAL
RER45F12R4&	12.4	10	F	NONINDUCTIVE	R	P	DAL
RER45F12R7&	12.7	10	F	NONINDUCTIVE	R	P	DAL
RER45F13R0&	13.0	10	F	NONINDUCTIVE	R	P	DAL
RER45F13R3&	13.3	10	F	NONINDUCTIVE	R	P	DAL
RER45F13R7&	13.7	10	F	NONINDUCTIVE	R	P	DAL
	Resistance	Power	Resistance		Level 1	Level 2	
Part Number	Value (Ohms)	Rating (W)	Tolerance	Winding	(FRL)(&)	(FRL)(&)	Manufacturer

RER45F14R0&	14.0	10	F	NONINDUCTIVE	R	P	DAL
RER45F14R3&	14.3	10	F	NONINDUCTIVE	R	P	DAL
RER45F14R7&	14.7	10	F	NONINDUCTIVE	R	P	DAL
RER45F15R0&	15.0	10	F	NONINDUCTIVE	R	P	DAL
RER45F15R4&	15.4	10	F	NONINDUCTIVE	R	P	DAL
RER45F15R8&	15.8	10	F	NONINDUCTIVE	R	P	DAL
RER45F16R2&	16.2	10	F	NONINDUCTIVE	R	P	DAL
RER45F16R5&	16.5	10	F	NONINDUCTIVE	R	P	DAL
RER45F16R9&	16.9	10	F	NONINDUCTIVE	R	P	DAL
RER45F17R4&	17.4	10	F	NONINDUCTIVE	R	P	DAL
RER45F17R8&	17.8	10	F	NONINDUCTIVE	R	P	DAL
RER45F18R2&	18.2	10	F	NONINDUCTIVE	R	P	DAL
RER45F18R7&	18.7	10	F	NONINDUCTIVE	R	P	DAL
	Resistance	Power	Resistance		Level 1	Level 2	
Part Number	Value (Ohms)	Rating (W)	Tolerance	Winding	(FRL)(&)	(FRL)(&)	Manufacturer
RER45F19R1&	19.1	10	F	NONINDUCTIVE	R	P	DAL
RER45F19R6&	19.6	10	F	NONINDUCTIVE	R	P	DAL
RER45F20R0&	20.0	10	F	NONINDUCTIVE	R	P	DAL
RER45F20R5&	20.5	10	F	NONINDUCTIVE	R	P	DAL
RER45F21R0&	21.0	10	F	NONINDUCTIVE	R	P	DAL
RER45F21R5&	21.5	10	F	NONINDUCTIVE	R	P	DAL
RER45F22R1&	22.1	10	F	NONINDUCTIVE	R	P	DAL
RER45F22R6&	22.6	10	F	NONINDUCTIVE	R	P	DAL
RER45F23R2&	23.2	10	F	NONINDUCTIVE	R	P	DAL
RER45F23R7&	23.7	10	F	NONINDUCTIVE	R	P	DAL
RER45F24R3&	24.3	10	F	NONINDUCTIVE	R	P	DAL
RER45F24R9&	24.9	10	F	NONINDUCTIVE	R	P	DAL
RER45F25R5&	25.5	10	F	NONINDUCTIVE	R	P	DAL
RER45F26R1&	26.1	10	F	NONINDUCTIVE	R	P	DAL
	Resistance	Power	Resistance		Level 1	Level 2	
Part Number	Value (Ohms)	Rating (W)	Tolerance	Winding	(FRL)(&)	(FRL)(&)	Manufacturer
RER45F26R7&	26.7	10	F	NONINDUCTIVE	R	P	DAL
RER45F27R4&	27.4	10	F	NONINDUCTIVE	R	P	DAL
RER45F28R0&	28.0	10	F	NONINDUCTIVE	R	P	DAL
RER45F28R7&	28.7	10	F	NONINDUCTIVE	R	P	DAL
RER45F29R4&	29.4	10	F	NONINDUCTIVE	R	P	DAL
RER45F30R1&	30.1	10	F	NONINDUCTIVE	R	P	DAL
RER45F30R9&	30.9	10	F	NONINDUCTIVE	R	P	DAL
RER45F31R6&	31.6	10	F	NONINDUCTIVE	R	P	DAL
RER45F32R4&	32.4	10	F	NONINDUCTIVE	R	P	DAL
RER45F33R2&	33.2	10	F	NONINDUCTIVE	R	P	DAL
RER45F34R0&	34.0	10	F	NONINDUCTIVE	R	P	DAL
RER45F34R8&	34.8	10	F	NONINDUCTIVE	R	P	DAL
RER45F35R7&	35.7	10	F	NONINDUCTIVE	R	P	DAL
	Resistance	Power	Resistance		Level 1	Level 2	
Part Number	Value (Ohms)	Rating (W)	Tolerance	Winding	(FRL)(&)	(FRL)(&)	Manufacturer
RER45F36R5&	36.5	10	F	NONINDUCTIVE	R	P	DAL

RER45F37R4&	37.4	10	F	NONINDUCTIVE	R	P	DAL
RER45F38R3&	38.3	10	F	NONINDUCTIVE	R	P	DAL
RER45F39R2&	39.2	10	F	NONINDUCTIVE	R	P	DAL
RER45F40R2&	40.2	10	F	NONINDUCTIVE	R	P	DAL
RER45F41R2&	41.2	10	F	NONINDUCTIVE	R	P	DAL
RER45F42R2&	42.2	10	F	NONINDUCTIVE	R	P	DAL
RER45F43R2&	43.2	10	F	NONINDUCTIVE	R	P	DAL
RER45F44R2&	44.2	10	F	NONINDUCTIVE	R	P	DAL
RER45F45R3&	45.3	10	F	NONINDUCTIVE	R	P	DAL
RER45F46R4&	46.4	10	F	NONINDUCTIVE	R	P	DAL
RER45F47R5&	47.5	10	F	NONINDUCTIVE	R	P	DAL
RER45F48R7&	48.7	10	F	NONINDUCTIVE	R	P	DAL
RER45F49R9&	49.9	10	F	NONINDUCTIVE	R	P	DAL
	Resistance	Power	Resistance		Level 1	Level 2	
Part Number	Value (Ohms)	Rating (W)	Tolerance	Winding	(FRL)(&)	(FRL)(&)	Manufacturer
RER45F51R1&	51.1	10	F	NONINDUCTIVE	R	P	DAL
RER45F52R3&	52.3	10	F	NONINDUCTIVE	R	P	DAL
RER45F53R6&	53.6	10	F	NONINDUCTIVE	R	P	DAL
RER45F54R9&	54.9	10	F	NONINDUCTIVE	R	P	DAL
RER45F56R2&	56.2	10	F	NONINDUCTIVE	R	P	DAL
RER45F57R6&	57.6	10	F	NONINDUCTIVE	R	P	DAL
RER45F59R0&	59.0	10	F	NONINDUCTIVE	R	P	DAL
RER45F60R4&	60.4	10	F	NONINDUCTIVE	R	P	DAL
RER45F61R9&	61.9	10	F	NONINDUCTIVE	R	P	DAL
RER45F63R4&	63.4	10	F	NONINDUCTIVE	R	P	DAL
RER45F64R9&	64.9	10	F	NONINDUCTIVE	R	P	DAL
RER45F66R5&	66.5	10	F	NONINDUCTIVE	R	P	DAL
RER45F68R1&	68.1	10	F	NONINDUCTIVE	R	P	DAL
	Resistance	Power	Resistance		Level 1	Level 2	
Part Number	Value (Ohms)	Rating (W)	Tolerance	Winding	(FRL)(&)	(FRL)(&)	Manufacturer
RER45F69R8&	69.8	10	F	NONINDUCTIVE	R	P	DAL
RER45F71R5&	71.5	10	F	NONINDUCTIVE	R	P	DAL
RER45F73R2&	73.2	10	F	NONINDUCTIVE	R	P	DAL
RER45F75R0&	75.0	10	F	NONINDUCTIVE	R	P	DAL
RER45F76R8&	76.8	10	F	NONINDUCTIVE	R	P	DAL
RER45F78R7&	78.7	10	F	NONINDUCTIVE	R	P	DAL
RER45F80R6&	80.6	10	F	NONINDUCTIVE	R	P	DAL
RER45F82R5&	82.5	10	F	NONINDUCTIVE	R	P	DAL
RER45F84R5&	84.5	10	F	NONINDUCTIVE	R	P	DAL
RER45F86R6&	86.6	10	F	NONINDUCTIVE	R	P	DAL
RER45F88R7&	88.7	10	F	NONINDUCTIVE	R	P	DAL
RER45F90R9&	90.9	10	F	NONINDUCTIVE	R	P	DAL
RER45F93R1&	93.1	10	F	NONINDUCTIVE	R	P	DAL
RER45F95R3&	95.3	10	F	NONINDUCTIVE	R	P	DAL
RER45F97R6&	97.6	10	F	NONINDUCTIVE	R	P	DAL
	Resistance	Power	Resistance		Level 1	Level 2	
Part Number	Value (Ohms)	Rating (W)	Tolerance	Winding	(FRL)(&)	(FRL)(&)	Manufacturer

RER45 Wirewound Resistors: 100 Ohms through 976 Ohms

	Resistance	Power	Resistance		Level 1	Level 2	
Part Number	Value (Ohms)	Rating (W)	Tolerance	Winding	(FRL)(&)	(FRL)(&)	Manufacturer
RER45F100R&	100	10	F	NONINDUCTIVE	R	P	DAL
RER45F102R&	102	10	F	NONINDUCTIVE	R	P	DAL
RER45F105R&	105	10	F	NONINDUCTIVE	R	P	DAL
RER45F107R&	107	10	F	NONINDUCTIVE	R	P	DAL
RER45F110R&	110	10	F	NONINDUCTIVE	R	P	DAL
RER45F113R&	113	10	F	NONINDUCTIVE	R	P	DAL
RER45F115R&	115	10	F	NONINDUCTIVE	R	P	DAL
RER45F118R&	118	10	F	NONINDUCTIVE	R	P	DAL
RER45F121R&	121	10	F	NONINDUCTIVE	R	P	DAL
RER45F124R&	124	10	F	NONINDUCTIVE	R	P	DAL
RER45F127R&	127	10	F	NONINDUCTIVE	R	P	DAL
RER45F130R&	130	10	F	NONINDUCTIVE	R	P	DAL
RER45F133R&	133	10	F	NONINDUCTIVE	R	P	DAL
RER45F137R&	137	10	F	NONINDUCTIVE	R	P	DAL
	Resistance	Power	Resistance		Level 1	Level 2	
Part Number	Value (Ohms)	Rating (W)	Tolerance	Winding	(FRL)(&)	(FRL)(&)	Manufacturer
RER45F140R&	140	10	F	NONINDUCTIVE	R	P	DAL
RER45F143R&	143	10	F	NONINDUCTIVE	R	P	DAL
RER45F147R&	147	10	F	NONINDUCTIVE	R	P	DAL
RER45F150R&	150	10	F	NONINDUCTIVE	R	P	DAL
RER45F154R&	154	10	F	NONINDUCTIVE	R	P	DAL
RER45F158R&	158	10	F	NONINDUCTIVE	R	P	DAL
RER45F162R&	162	10	F	NONINDUCTIVE	R	P	DAL
RER45F165R&	165	10	F	NONINDUCTIVE	R	P	DAL
RER45F169R&	169	10	F	NONINDUCTIVE	R	P	DAL
RER45F174R&	174	10	F	NONINDUCTIVE	R	P	DAL
RER45F178R&	178	10	F	NONINDUCTIVE	R	P	DAL
RER45F182R&	182	10	F	NONINDUCTIVE	R	P	DAL
RER45F187R&	187	10	F	NONINDUCTIVE	R	P	DAL
	Resistance	Power	Resistance		Level 1	Level 2	
Part Number	Value (Ohms)	Rating (W)	Tolerance	Winding	(FRL)(&)	(FRL)(&)	Manufacturer
RER45F191R&	191	10	F	NONINDUCTIVE	R	P	DAL
RER45F196R&	196	10	F	NONINDUCTIVE	R	P	DAL
RER45F200R&	200	10	F	NONINDUCTIVE	R	P	DAL
RER45F205R&	205	10	F	NONINDUCTIVE	R	P	DAL
RER45F210R&	210	10	F	NONINDUCTIVE	R	P	DAL
RER45F215R&	215	10	F	NONINDUCTIVE	R	P	DAL
RER45F221R&	221	10	F	NONINDUCTIVE	R	P	DAL
RER45F226R&	226	10	F	NONINDUCTIVE	R	P	DAL
RER45F232R&	232	10	F	NONINDUCTIVE	R	P	DAL

RER45F237R&	237	10	F	NONINDUCTIVE	R	P	DAL
RER45F243R&	243	10	F	NONINDUCTIVE	R	P	DAL
RER45F249R&	249	10	F	NONINDUCTIVE	R	P	DAL
RER45F255R&	255	10	F	NONINDUCTIVE	R	P	DAL
RER45F261R&	261	10	F	NONINDUCTIVE	R	P	DAL
	Resistance	Power	Resistance		Level 1	Level 2	
Part Number	Value (Ohms)	Rating (W)	Tolerance	Winding	(FRL)(&)	(FRL)(&)	Manufacturer
RER45F267R&	267	10	F	NONINDUCTIVE	R	P	DAL
RER45F274R&	274	10	F	NONINDUCTIVE	R	P	DAL
RER45F280R&	280	10	F	NONINDUCTIVE	R	P	DAL
RER45F287R&	287	10	F	NONINDUCTIVE	R	P	DAL
RER45F294R&	294	10	F	NONINDUCTIVE	R	P	DAL
RER45F301R&	301	10	F	NONINDUCTIVE	R	P	DAL
RER45F309R&	309	10	F	NONINDUCTIVE	R	P	DAL
RER45F316R&	316	10	F	NONINDUCTIVE	R	P	DAL
RER45F324R&	324	10	F	NONINDUCTIVE	R	P	DAL
RER45F332R&	332	10	F	NONINDUCTIVE	R	P	DAL
RER45F340R&	340	10	F	NONINDUCTIVE	R	P	DAL
RER45F348R&	348	10	F	NONINDUCTIVE	R	P	DAL
RER45F357R&	357	10	F	NONINDUCTIVE	R	P	DAL
	Resistance	Power	Resistance		Level 1	Level 2	
Part Number	Value (Ohms)	Rating (W)	Tolerance	Winding	(FRL)(&)	(FRL)(&)	Manufacturer
RER45F365R&	365	10	F	NONINDUCTIVE	R	P	DAL
RER45F374R&	374	10	F	NONINDUCTIVE	R	P	DAL
RER45F383R&	383	10	F	NONINDUCTIVE	R	P	DAL
RER45F392R&	392	10	F	NONINDUCTIVE	R	P	DAL
RER45F402R&	402	10	F	NONINDUCTIVE	R	P	DAL
RER45F412R&	412	10	F	NONINDUCTIVE	R	P	DAL
RER45F422R&	422	10	F	NONINDUCTIVE	R	P	DAL
RER45F432R&	432	10	F	NONINDUCTIVE	R	P	DAL
RER45F442R&	442	10	F	NONINDUCTIVE	R	P	DAL
RER45F453R&	453	10	F	NONINDUCTIVE	R	P	DAL
RER45F464R&	464	10	F	NONINDUCTIVE	R	P	DAL
RER45F475R&	475	10	F	NONINDUCTIVE	R	P	DAL
RER45F487R&	487	10	F	NONINDUCTIVE	R	P	DAL
RER45F499R&	499	10	F	NONINDUCTIVE	R	P	DAL
	Resistance	Power	Resistance		Level 1	Level 2	
Part Number	Value (Ohms)	Rating (W)	Tolerance	Winding	(FRL)(&)	(FRL)(&)	Manufacturer
RER45F511R&	511	10	F	NONINDUCTIVE	R	P	DAL
RER45F523R&	523	10	F	NONINDUCTIVE	R	P	DAL
RER45F536R&	536	10	F	NONINDUCTIVE	R	P	DAL
RER45F549R&	549	10	F	NONINDUCTIVE	R	P	DAL
RER45F562R&	562	10	F	NONINDUCTIVE	R	P	DAL
RER45F576R&	576	10	F	NONINDUCTIVE	R	P	DAL
RER45F590R&	590	10	F	NONINDUCTIVE	R	P	DAL
RER45F604R&	604	10	F	NONINDUCTIVE	R	P	DAL
RER45F619R&	619	10	F	NONINDUCTIVE	R	P	DAL

RER45F634R&	634	10	F	NONINDUCTIVE	R	P	DAL
RER45F649R&	649	10	F	NONINDUCTIVE	R	P	DAL
RER45F665R&	665	10	F	NONINDUCTIVE	R	P	DAL
RER45F681R&	681	10	F	NONINDUCTIVE	R	P	DAL
	Resistance	Power	Resistance		Level 1	Level 2	
Part Number	Value (Ohms)	Rating (W)	Tolerance	Winding	(FRL)(&)	(FRL)(&)	Manufacturer
RER45F698R&	698	10	F	NONINDUCTIVE	R	P	DAL
RER45F715R&	715	10	F	NONINDUCTIVE	R	P	DAL
RER45F732R&	732	10	F	NONINDUCTIVE	R	P	DAL
RER45F750R&	750	10	F	NONINDUCTIVE	R	P	DAL
RER45F768R&	768	10	F	NONINDUCTIVE	R	P	DAL
RER45F787R&	787	10	F	NONINDUCTIVE	R	P	DAL
RER45F806R&	806	10	F	NONINDUCTIVE	R	P	DAL
RER45F825R&	825	10	F	NONINDUCTIVE	R	P	DAL
RER45F845R&	845	10	F	NONINDUCTIVE	R	P	DAL
RER45F866R&	866	10	F	NONINDUCTIVE	R	P	DAL
RER45F887R&	887	10	F	NONINDUCTIVE	R	P	DAL
RER45F909R&	909	10	F	NONINDUCTIVE	R	P	DAL
RER45F931R&	931	10	F	NONINDUCTIVE	R	P	DAL
RER45F953R&	953	10	F	NONINDUCTIVE	R	P	DAL
RER45F976R&	976	10	F	NONINDUCTIVE	R	P	DAL
	Resistance	Power	Resistance		Level 1	Level 2	
Part Number	Value (Ohms)	Rating (W)	Tolerance	Winding	(FRL)(&)	(FRL)(&)	Manufacturer

RER45 Wirewound Resistors: 1000 Ohms through 2800 Ohms

	Resistance	Power	Resistance		Level 1	Level 2	
Part Number	Value (Ohms)	Rating (W)	Tolerance	Winding	(FRL)(&)	(FRL)(&)	Manufacturer
RER45F1001&	1,000	10	F	NONINDUCTIVE	R	P	DAL
RER45F1021&	1,020	10	F	NONINDUCTIVE	R	P	DAL
RER45F1051&	1,050	10	F	NONINDUCTIVE	R	P	DAL
RER45F1071&	1,070	10	F	NONINDUCTIVE	R	P	DAL
RER45F1101&	1,100	10	F	NONINDUCTIVE	R	P	DAL
RER45F1131&	1,130	10	F	NONINDUCTIVE	R	P	DAL
RER45F1151&	1,150	10	F	NONINDUCTIVE	R	P	DAL
RER45F1181&	1,180	10	F	NONINDUCTIVE	R	P	DAL
RER45F1211&	1,210	10	F	NONINDUCTIVE	R	P	DAL
RER45F1241&	1,240	10	F	NONINDUCTIVE	R	P	DAL
RER45F1271&	1,270	10	F	NONINDUCTIVE	R	P	DAL
RER45F1301&	1,300	10	F	NONINDUCTIVE	R	P	DAL
RER45F1331&	1,330	10	F	NONINDUCTIVE	R	P	DAL
RER45F1371&	1,370	10	F	NONINDUCTIVE	R	P	DAL
	Resistance	Power	Resistance		Level 1	Level 2	
Part Number	Value (Ohms)	Rating (W)	Tolerance	Winding	(FRL)(&)	(FRL)(&)	Manufacturer
RER45F1401&	1,400	10	F	NONINDUCTIVE	R	P	DAL

RER45F1431&	1,430	10	F	NONINDUCTIVE	R	P	DAL
RER45F1471&	1,470	10	F	NONINDUCTIVE	R	P	DAL
RER45F1501&	1,500	10	F	NONINDUCTIVE	R	P	DAL
RER45F1541&	1,540	10	F	NONINDUCTIVE	R	P	DAL
RER45F1581&	1,580	10	F	NONINDUCTIVE	R	P	DAL
RER45F1621&	1,620	10	F	NONINDUCTIVE	R	P	DAL
RER45F1651&	1,650	10	F	NONINDUCTIVE	R	P	DAL
RER45F1691&	1,690	10	F	NONINDUCTIVE	R	P	DAL
RER45F1741&	1,740	10	F	NONINDUCTIVE	R	P	DAL
RER45F1781&	1,780	10	F	NONINDUCTIVE	R	P	DAL
RER45F1821&	1,820	10	F	NONINDUCTIVE	R	P	DAL
RER45F1871&	1,870	10	F	NONINDUCTIVE	R	P	DAL
	Resistance	Power	Resistance		Level 1	Level 2	
Part Number	Value (Ohms)	Rating (W)	Tolerance	Winding	(FRL)(&)	(FRL)(&)	Manufacturer
RER45F1911&	1,910	10	F	NONINDUCTIVE	R	P	DAL
RER45F1961&	1,960	10	F	NONINDUCTIVE	R	P	DAL
RER45F2001&	2,000	10	F	NONINDUCTIVE	R	P	DAL
RER45F2051&	2,050	10	F	NONINDUCTIVE	R	P	DAL
RER45F2101&	2,100	10	F	NONINDUCTIVE	R	P	DAL
RER45F2151&	2,150	10	F	NONINDUCTIVE	R	P	DAL
RER45F2211&	2,210	10	F	NONINDUCTIVE	R	P	DAL
RER45F2261&	2,260	10	F	NONINDUCTIVE	R	P	DAL
RER45F2321&	2,320	10	F	NONINDUCTIVE	R	P	DAL
RER45F2371&	2,370	10	F	NONINDUCTIVE	R	P	DAL
RER45F2431&	2,430	10	F	NONINDUCTIVE	R	P	DAL
RER45F2491&	2,490	10	F	NONINDUCTIVE	R	P	DAL
RER45F2551&	2,550	10	F	NONINDUCTIVE	R	P	DAL
RER45F2611&	2,610	10	F	NONINDUCTIVE	R	P	DAL
	Resistance	Power	Resistance		Level 1	Level 2	
Part Number	Value (Ohms)	Rating (W)	Tolerance	Winding	(FRL)(&)	(FRL)(&)	Manufacturer
RER45F2671&	2,670	10	F	NONINDUCTIVE	R	P	DAL
RER45F2741&	2,740	10	F	NONINDUCTIVE	R	P	DAL
RER45F2801&	2,800	10	F	NONINDUCTIVE	R	P	DAL

RER50 Wirewound Resistors

	Resistance	Power	Resistance		Level 1	Level 2	
Part Number	Value (Ohms)	Rating (W)	Tolerance	Winding	(FRL)(&)	(FRL)(&)	Manufacturer
RER50F1R00&	1.00	20	F	NONINDUCTIVE	R	P	DAL
RER50F1R02&	1.02	20	F	NONINDUCTIVE	R	P	DAL
RER50F1R05&	1.05	20	F	NONINDUCTIVE	R	P	DAL
RER50F1R07&	1.07	20	F	NONINDUCTIVE	R	P	DAL
RER50F1R10&	1.10	20	F	NONINDUCTIVE	R	P	DAL
RER50F1R13&	1.13	20	F	NONINDUCTIVE	R	P	DAL
RER50F1R15&	1.15	20	F	NONINDUCTIVE	R	P	DAL

RER50F1R18&	1.18	20	F	NONINDUCTIVE	R	P	DAL
RER50F1R21&	1.21	20	F	NONINDUCTIVE	R	P	DAL
RER50F1R24&	1.24	20	F	NONINDUCTIVE	R	P	DAL
RER50F1R27&	1.27	20	F	NONINDUCTIVE	R	P	DAL
RER50F1R30&	1.30	20	F	NONINDUCTIVE	R	P	DAL
RER50F1R33&	1.33	20	F	NONINDUCTIVE	R	P	DAL
RER50F1R37&	1.37	20	F	NONINDUCTIVE	R	P	DAL
RER50F1R40&	1.40	20	F	NONINDUCTIVE	R	P	DAL
RER50F1R43&	1.43	20	F	NONINDUCTIVE	R	P	DAL
RER50F1R47&	1.47	20	F	NONINDUCTIVE	R	P	DAL
RER50F1R50&	1.50	20	F	NONINDUCTIVE	R	P	DAL
RER50F1R54&	1.54	20	F	NONINDUCTIVE	R	P	DAL
RER50F1R58&	1.58	20	F	NONINDUCTIVE	R	P	DAL
RER50F1R62&	1.62	20	F	NONINDUCTIVE	R	P	DAL
RER50F1R65&	1.65	20	F	NONINDUCTIVE	R	P	DAL
RER50F1R69&	1.69	20	F	NONINDUCTIVE	R	P	DAL
RER50F1R74&	1.74	20	F	NONINDUCTIVE	R	P	DAL
RER50F1R78&	1.78	20	F	NONINDUCTIVE	R	P	DAL
RER50F1R82&	1.82	20	F	NONINDUCTIVE	R	P	DAL
RER50F1R87&	1.87	20	F	NONINDUCTIVE	R	P	DAL
RER50F1R91&	1.91	20	F	NONINDUCTIVE	R	P	DAL
RER50F1R96&	1.96	20	F	NONINDUCTIVE	R	P	DAL
RER50F2R00&	2.00	20	F	NONINDUCTIVE	R	P	DAL
RER50F2R05&	2.05	20	F	NONINDUCTIVE	R	P	DAL
RER50F2R10&	2.10	20	F	NONINDUCTIVE	R	P	DAL
RER50F2R15&	2.15	20	F	NONINDUCTIVE	R	P	DAL
RER50F2R21&	2.21	20	F	NONINDUCTIVE	R	P	DAL
RER50F2R26&	2.26	20	F	NONINDUCTIVE	R	P	DAL
RER50F2R32&	2.32	20	F	NONINDUCTIVE	R	P	DAL
RER50F2R37&	2.37	20	F	NONINDUCTIVE	R	P	DAL
RER50F2R43&	2.43	20	F	NONINDUCTIVE	R	P	DAL
RER50F2R49&	2.49	20	F	NONINDUCTIVE	R	P	DAL
RER50F2R55&	2.55	20	F	NONINDUCTIVE	R	P	DAL
RER50F2R61&	2.61	20	F	NONINDUCTIVE	R	P	DAL
RER50F2R67&	2.67	20	F	NONINDUCTIVE	R	P	DAL
RER50F2R74&	2.74	20	F	NONINDUCTIVE	R	P	DAL
RER50F2R80&	2.80	20	F	NONINDUCTIVE	R	P	DAL
RER50F2R87&	2.87	20	F	NONINDUCTIVE	R	P	DAL
RER50F2R94&	2.94	20	F	NONINDUCTIVE	R	P	DAL
RER50F3R01&	3.01	20	F	NONINDUCTIVE	R	P	DAL
RER50F3R09&	3.09	20	F	NONINDUCTIVE	R	P	DAL
RER50F3R16&	3.16	20	F	NONINDUCTIVE	R	P	DAL
RER50F3R24&	3.24	20	F	NONINDUCTIVE	R	P	DAL
RER50F3R32&	3.32	20	F	NONINDUCTIVE	R	P	DAL
RER50F3R40&	3.40	20	F	NONINDUCTIVE	R	P	DAL
RER50F3R48&	3.48	20	F	NONINDUCTIVE	R	P	DAL
RER50F3R57&	3.57	20	F	NONINDUCTIVE	R	P	DAL

RER50F3R65&	3.65	20	F	NONINDUCTIVE	R	P	DAL
RER50F3R74&	3.74	20	F	NONINDUCTIVE	R	P	DAL
RER50F3R83&	3.83	20	F	NONINDUCTIVE	R	P	DAL
RER50F3R92&	3.92	20	F	NONINDUCTIVE	R	P	DAL
RER50F4R02&	4.02	20	F	NONINDUCTIVE	R	P	DAL
RER50F4R12&	4.12	20	F	NONINDUCTIVE	R	P	DAL
RER50F4R22&	4.22	20	F	NONINDUCTIVE	R	P	DAL
RER50F4R32&	4.32	20	F	NONINDUCTIVE	R	P	DAL
RER50F4R42&	4.42	20	F	NONINDUCTIVE	R	P	DAL
RER50F4R53&	4.53	20	F	NONINDUCTIVE	R	P	DAL
RER50F4R64&	4.64	20	F	NONINDUCTIVE	R	P	DAL
RER50F4R75&	4.75	20	F	NONINDUCTIVE	R	P	DAL
RER50F4R87&	4.87	20	F	NONINDUCTIVE	R	P	DAL
RER50F4R99&	4.99	20	F	NONINDUCTIVE	R	P	DAL
RER50F5R11&	5.11	20	F	NONINDUCTIVE	R	P	DAL
RER50F5R23&	5.23	20	F	NONINDUCTIVE	R	P	DAL
RER50F5R36&	5.36	20	F	NONINDUCTIVE	R	P	DAL
RER50F5R49&	5.49	20	F	NONINDUCTIVE	R	P	DAL
RER50F5R62&	5.62	20	F	NONINDUCTIVE	R	P	DAL
RER50F5R76&	5.76	20	F	NONINDUCTIVE	R	P	DAL
RER50F5R90&	5.90	20	F	NONINDUCTIVE	R	P	DAL
RER50F6R04&	6.04	20	F	NONINDUCTIVE	R	P	DAL
RER50F6R19&	6.19	20	F	NONINDUCTIVE	R	P	DAL
RER50F6R34&	6.34	20	F	NONINDUCTIVE	R	P	DAL
RER50F6R49&	6.49	20	F	NONINDUCTIVE	R	P	DAL
RER50F6R65&	6.65	20	F	NONINDUCTIVE	R	P	DAL
RER50F6R81&	6.81	20	F	NONINDUCTIVE	R	P	DAL
RER50F6R98&	6.98	20	F	NONINDUCTIVE	R	P	DAL
RER50F7R15&	7.15	20	F	NONINDUCTIVE	R	P	DAL
RER50F7R32&	7.32	20	F	NONINDUCTIVE	R	P	DAL
RER50F7R50&	7.50	20	F	NONINDUCTIVE	R	P	DAL
RER50F7R68&	7.68	20	F	NONINDUCTIVE	R	P	DAL
RER50F7R87&	7.87	20	F	NONINDUCTIVE	R	P	DAL
RER50F8R06&	8.06	20	F	NONINDUCTIVE	R	P	DAL
RER50F8R25&	8.25	20	F	NONINDUCTIVE	R	P	DAL
RER50F8R45&	8.45	20	F	NONINDUCTIVE	R	P	DAL
RER50F8R66&	8.66	20	F	NONINDUCTIVE	R	P	DAL
RER50F8R87&	8.87	20	F	NONINDUCTIVE	R	P	DAL
RER50F9R09&	9.09	20	F	NONINDUCTIVE	R	P	DAL
RER50F9R31&	9.31	20	F	NONINDUCTIVE	R	P	DAL
RER50F9R53&	9.53	20	F	NONINDUCTIVE	R	P	DAL
RER50F9R76&	9.76	20	F	NONINDUCTIVE	R	P	DAL
RER50F10R0&	10.0	20	F	NONINDUCTIVE	R	P	DAL
RER50F10R2&	10.2	20	F	NONINDUCTIVE	R	P	DAL
RER50F10R5&	10.5	20	F	NONINDUCTIVE	R	P	DAL
RER50F10R7&	10.7	20	F	NONINDUCTIVE	R	P	DAL
RER50F11R0&	11.0	20	F	NONINDUCTIVE	R	P	DAL

RER50F11R3&	11.3	20	F	NONINDUCTIVE	R	P	DAL
RER50F11R5&	11.5	20	F	NONINDUCTIVE	R	P	DAL
RER50F11R8&	11.8	20	F	NONINDUCTIVE	R	P	DAL
RER50F12R1&	12.1	20	F	NONINDUCTIVE	R	P	DAL
RER50F12R4&	12.4	20	F	NONINDUCTIVE	R	P	DAL
RER50F12R7&	12.7	20	F	NONINDUCTIVE	R	P	DAL
RER50F13R0&	13.0	20	F	NONINDUCTIVE	R	P	DAL
RER50F13R3&	13.3	20	F	NONINDUCTIVE	R	P	DAL
RER50F13R7&	13.7	20	F	NONINDUCTIVE	R	P	DAL
RER50F14R0&	14.0	20	F	NONINDUCTIVE	R	P	DAL
RER50F14R3&	14.3	20	F	NONINDUCTIVE	R	P	DAL
RER50F14R7&	14.7	20	F	NONINDUCTIVE	R	P	DAL
RER50F15R0&	15.0	20	F	NONINDUCTIVE	R	P	DAL
RER50F15R4&	15.4	20	F	NONINDUCTIVE	R	P	DAL
RER50F15R8&	15.8	20	F	NONINDUCTIVE	R	P	DAL
RER50F16R2&	16.2	20	F	NONINDUCTIVE	R	P	DAL
RER50F16R5&	16.5	20	F	NONINDUCTIVE	R	P	DAL
RER50F16R9&	16.9	20	F	NONINDUCTIVE	R	P	DAL
RER50F17R4&	17.4	20	F	NONINDUCTIVE	R	P	DAL
RER50F17R8&	17.8	20	F	NONINDUCTIVE	R	P	DAL
RER50F18R2&	18.2	20	F	NONINDUCTIVE	R	P	DAL
RER50F18R7&	18.7	20	F	NONINDUCTIVE	R	P	DAL
RER50F19R1&	19.1	20	F	NONINDUCTIVE	R	P	DAL
RER50F19R6&	19.6	20	F	NONINDUCTIVE	R	P	DAL
RER50F20R0&	20.0	20	F	NONINDUCTIVE	R	P	DAL
RER50F20R5&	20.5	20	F	NONINDUCTIVE	R	P	DAL
RER50F21R0&	21.0	20	F	NONINDUCTIVE	R	P	DAL
RER50F21R5&	21.5	20	F	NONINDUCTIVE	R	P	DAL
RER50F22R1&	22.1	20	F	NONINDUCTIVE	R	P	DAL
RER50F22R6&	22.6	20	F	NONINDUCTIVE	R	P	DAL
RER50F23R2&	23.2	20	F	NONINDUCTIVE	R	P	DAL
RER50F23R7&	23.7	20	F	NONINDUCTIVE	R	P	DAL
RER50F24R3&	24.3	20	F	NONINDUCTIVE	R	P	DAL
RER50F24R9&	24.9	20	F	NONINDUCTIVE	R	P	DAL
RER50F25R5&	25.5	20	F	NONINDUCTIVE	R	P	DAL
RER50F26R1&	26.1	20	F	NONINDUCTIVE	R	P	DAL
RER50F26R7&	26.7	20	F	NONINDUCTIVE	R	P	DAL
RER50F27R4&	27.4	20	F	NONINDUCTIVE	R	P	DAL
RER50F28R0&	28.0	20	F	NONINDUCTIVE	R	P	DAL
RER50F28R7&	28.7	20	F	NONINDUCTIVE	R	P	DAL
RER50F29R4&	29.4	20	F	NONINDUCTIVE	R	P	DAL
RER50F30R1&	30.1	20	F	NONINDUCTIVE	R	P	DAL
RER50F30R9&	30.9	20	F	NONINDUCTIVE	R	P	DAL
RER50F31R6&	31.6	20	F	NONINDUCTIVE	R	P	DAL
RER50F32R4&	32.4	20	F	NONINDUCTIVE	R	P	DAL
RER50F33R2&	33.2	20	F	NONINDUCTIVE	R	P	DAL
RER50F34R0&	34.0	20	F	NONINDUCTIVE	R	P	DAL

RER50F34R8&	34.8	20	F	NONINDUCTIVE	R	P	DAL
RER50F35R7&	35.7	20	F	NONINDUCTIVE	R	P	DAL
RER50F36R5&	36.5	20	F	NONINDUCTIVE	R	P	DAL
RER50F37R4&	37.4	20	F	NONINDUCTIVE	R	P	DAL
RER50F38R3&	38.3	20	F	NONINDUCTIVE	R	P	DAL
RER50F39R2&	39.2	20	F	NONINDUCTIVE	R	P	DAL
RER50F40R2&	40.2	20	F	NONINDUCTIVE	R	P	DAL
RER50F41R2&	41.2	20	F	NONINDUCTIVE	R	P	DAL
RER50F42R2&	42.2	20	F	NONINDUCTIVE	R	P	DAL
RER50F43R2&	43.2	20	F	NONINDUCTIVE	R	P	DAL
RER50F44R2&	44.2	20	F	NONINDUCTIVE	R	P	DAL
RER50F45R3&	45.3	20	F	NONINDUCTIVE	R	P	DAL
RER50F46R4&	46.4	20	F	NONINDUCTIVE	R	P	DAL
RER50F47R5&	47.5	20	F	NONINDUCTIVE	R	P	DAL
RER50F48R7&	48.7	20	F	NONINDUCTIVE	R	P	DAL
RER50F49R9&	49.9	20	F	NONINDUCTIVE	R	P	DAL
RER50F51R1&	51.1	20	F	NONINDUCTIVE	R	P	DAL
RER50F52R3&	52.3	20	F	NONINDUCTIVE	R	P	DAL
RER50F53R6&	53.6	20	F	NONINDUCTIVE	R	P	DAL
RER50F54R9&	54.9	20	F	NONINDUCTIVE	R	P	DAL
RER50F56R2&	56.2	20	F	NONINDUCTIVE	R	P	DAL
RER50F57R6&	57.6	20	F	NONINDUCTIVE	R	P	DAL
RER50F59R0&	59.0	20	F	NONINDUCTIVE	R	P	DAL
RER50F60R4&	60.4	20	F	NONINDUCTIVE	R	P	DAL
RER50F61R9&	61.9	20	F	NONINDUCTIVE	R	P	DAL
RER50F63R4&	63.4	20	F	NONINDUCTIVE	R	P	DAL
RER50F64R9&	64.9	20	F	NONINDUCTIVE	R	P	DAL
RER50F66R5&	66.5	20	F	NONINDUCTIVE	R	P	DAL
RER50F68R1&	68.1	20	F	NONINDUCTIVE	R	P	DAL
RER50F69R8&	69.8	20	F	NONINDUCTIVE	R	P	DAL
RER50F71R5&	71.5	20	F	NONINDUCTIVE	R	P	DAL
RER50F73R2&	73.2	20	F	NONINDUCTIVE	R	P	DAL
RER50F75R0&	75.0	20	F	NONINDUCTIVE	R	P	DAL
RER50F76R8&	76.8	20	F	NONINDUCTIVE	R	P	DAL
RER50F78R7&	78.7	20	F	NONINDUCTIVE	R	P	DAL
RER50F80R6&	80.6	20	F	NONINDUCTIVE	R	P	DAL
RER50F82R5&	82.5	20	F	NONINDUCTIVE	R	P	DAL
RER50F84R5&	84.5	20	F	NONINDUCTIVE	R	P	DAL
RER50F86R6&	86.6	20	F	NONINDUCTIVE	R	P	DAL
RER50F88R7&	88.7	20	F	NONINDUCTIVE	R	P	DAL
RER50F90R9&	90.9	20	F	NONINDUCTIVE	R	P	DAL
RER50F93R1&	93.1	20	F	NONINDUCTIVE	R	P	DAL
RER50F95R3&	95.3	20	F	NONINDUCTIVE	R	P	DAL
RER50F97R6&	97.6	20	F	NONINDUCTIVE	R	P	DAL
RER50F100R&	100	20	F	NONINDUCTIVE	R	P	DAL
RER50F102R&	102	20	F	NONINDUCTIVE	R	P	DAL
RER50F105R&	105	20	F	NONINDUCTIVE	R	P	DAL

RER50F107R&	107	20	F	NONINDUCTIVE	R	P	DAL
RER50F110R&	110	20	F	NONINDUCTIVE	R	P	DAL
RER50F113R&	113	20	F	NONINDUCTIVE	R	P	DAL
RER50F115R&	115	20	F	NONINDUCTIVE	R	P	DAL
RER50F118R&	118	20	F	NONINDUCTIVE	R	P	DAL
RER50F121R&	121	20	F	NONINDUCTIVE	R	P	DAL
RER50F124R&	124	20	F	NONINDUCTIVE	R	P	DAL
RER50F127R&	127	20	F	NONINDUCTIVE	R	P	DAL
RER50F130R&	130	20	F	NONINDUCTIVE	R	P	DAL
RER50F133R&	133	20	F	NONINDUCTIVE	R	P	DAL
RER50F137R&	137	20	F	NONINDUCTIVE	R	P	DAL
RER50F140R&	140	20	F	NONINDUCTIVE	R	P	DAL
RER50F143R&	143	20	F	NONINDUCTIVE	R	P	DAL
RER50F147R&	147	20	F	NONINDUCTIVE	R	P	DAL
RER50F150R&	150	20	F	NONINDUCTIVE	R	P	DAL
RER50F154R&	154	20	F	NONINDUCTIVE	R	P	DAL
RER50F158R&	158	20	F	NONINDUCTIVE	R	P	DAL
RER50F162R&	162	20	F	NONINDUCTIVE	R	P	DAL
RER50F165R&	165	20	F	NONINDUCTIVE	R	P	DAL
RER50F169R&	169	20	F	NONINDUCTIVE	R	P	DAL
RER50F174R&	174	20	F	NONINDUCTIVE	R	P	DAL
RER50F178R&	178	20	F	NONINDUCTIVE	R	P	DAL
RER50F182R&	182	20	F	NONINDUCTIVE	R	P	DAL
RER50F187R&	187	20	F	NONINDUCTIVE	R	P	DAL
RER50F191R&	191	20	F	NONINDUCTIVE	R	P	DAL
RER50F196R&	196	20	F	NONINDUCTIVE	R	P	DAL
RER50F200R&	200	20	F	NONINDUCTIVE	R	P	DAL
RER50F205R&	205	20	F	NONINDUCTIVE	R	P	DAL
RER50F210R&	210	20	F	NONINDUCTIVE	R	P	DAL
RER50F215R&	215	20	F	NONINDUCTIVE	R	P	DAL
RER50F221R&	221	20	F	NONINDUCTIVE	R	P	DAL
RER50F226R&	226	20	F	NONINDUCTIVE	R	P	DAL
RER50F232R&	232	20	F	NONINDUCTIVE	R	P	DAL
RER50F237R&	237	20	F	NONINDUCTIVE	R	P	DAL
RER50F243R&	243	20	F	NONINDUCTIVE	R	P	DAL
RER50F249R&	249	20	F	NONINDUCTIVE	R	P	DAL
RER50F255R&	255	20	F	NONINDUCTIVE	R	P	DAL
RER50F261R&	261	20	F	NONINDUCTIVE	R	P	DAL
RER50F267R&	267	20	F	NONINDUCTIVE	R	P	DAL
RER50F274R&	274	20	F	NONINDUCTIVE	R	P	DAL
RER50F280R&	280	20	F	NONINDUCTIVE	R	P	DAL
RER50F287R&	287	20	F	NONINDUCTIVE	R	P	DAL
RER50F294R&	294	20	F	NONINDUCTIVE	R	P	DAL
RER50F301R&	301	20	F	NONINDUCTIVE	R	P	DAL
RER50F309R&	309	20	F	NONINDUCTIVE	R	P	DAL
RER50F316R&	316	20	F	NONINDUCTIVE	R	P	DAL
RER50F324R&	324	20	F	NONINDUCTIVE	R	P	DAL

RER50F332R&	332	20	F	NONINDUCTIVE	R	P	DAL
RER50F340R&	340	20	F	NONINDUCTIVE	R	P	DAL
RER50F348R&	348	20	F	NONINDUCTIVE	R	P	DAL
RER50F357R&	357	20	F	NONINDUCTIVE	R	P	DAL
RER50F365R&	365	20	F	NONINDUCTIVE	R	P	DAL
RER50F374R&	374	20	F	NONINDUCTIVE	R	P	DAL
RER50F383R&	383	20	F	NONINDUCTIVE	R	P	DAL
RER50F392R&	392	20	F	NONINDUCTIVE	R	P	DAL
RER50F402R&	402	20	F	NONINDUCTIVE	R	P	DAL
RER50F412R&	412	20	F	NONINDUCTIVE	R	P	DAL
RER50F422R&	422	20	F	NONINDUCTIVE	R	P	DAL
RER50F432R&	432	20	F	NONINDUCTIVE	R	P	DAL
RER50F442R&	442	20	F	NONINDUCTIVE	R	P	DAL
RER50F453R&	453	20	F	NONINDUCTIVE	R	P	DAL
RER50F464R&	464	20	F	NONINDUCTIVE	R	P	DAL
RER50F475R&	475	20	F	NONINDUCTIVE	R	P	DAL
RER50F487R&	487	20	F	NONINDUCTIVE	R	P	DAL
RER50F499R&	499	20	F	NONINDUCTIVE	R	P	DAL
RER50F511R&	511	20	F	NONINDUCTIVE	R	P	DAL
RER50F523R&	523	20	F	NONINDUCTIVE	R	P	DAL
RER50F536R&	536	20	F	NONINDUCTIVE	R	P	DAL
RER50F549R&	549	20	F	NONINDUCTIVE	R	P	DAL
RER50F562R&	562	20	F	NONINDUCTIVE	R	P	DAL
RER50F576R&	576	20	F	NONINDUCTIVE	R	P	DAL
RER50F590R&	590	20	F	NONINDUCTIVE	R	P	DAL
RER50F604R&	604	20	F	NONINDUCTIVE	R	P	DAL
RER50F619R&	619	20	F	NONINDUCTIVE	R	P	DAL
RER50F634R&	634	20	F	NONINDUCTIVE	R	P	DAL
RER50F649R&	649	20	F	NONINDUCTIVE	R	P	DAL
RER50F665R&	665	20	F	NONINDUCTIVE	R	P	DAL
RER50F681R&	681	20	F	NONINDUCTIVE	R	P	DAL
RER50F698R&	698	20	F	NONINDUCTIVE	R	P	DAL
RER50F715R&	715	20	F	NONINDUCTIVE	R	P	DAL
RER50F732R&	732	20	F	NONINDUCTIVE	R	P	DAL
RER50F750R&	750	20	F	NONINDUCTIVE	R	P	DAL
RER50F768R&	768	20	F	NONINDUCTIVE	R	P	DAL
RER50F787R&	787	20	F	NONINDUCTIVE	R	P	DAL
RER50F806R&	806	20	F	NONINDUCTIVE	R	P	DAL
RER50F825R&	825	20	F	NONINDUCTIVE	R	P	DAL
RER50F845R&	845	20	F	NONINDUCTIVE	R	P	DAL
RER50F866R&	866	20	F	NONINDUCTIVE	R	P	DAL
RER50F887R&	887	20	F	NONINDUCTIVE	R	P	DAL
RER50F909R&	909	20	F	NONINDUCTIVE	R	P	DAL
RER50F931R&	931	20	F	NONINDUCTIVE	R	P	DAL
RER50F953R&	953	20	F	NONINDUCTIVE	R	P	DAL
RER50F976R&	976	20	F	NONINDUCTIVE	R	P	DAL
RER50F1001&	1,000	20	F	NONINDUCTIVE	R	P	DAL

RER50F1021&	1,020	20	F	NONINDUCTIVE	R	P	DAL
RER50F1051&	1,050	20	F	NONINDUCTIVE	R	P	DAL
RER50F1071&	1,070	20	F	NONINDUCTIVE	R	P	DAL
RER50F1101&	1,100	20	F	NONINDUCTIVE	R	P	DAL
RER50F1131&	1,130	20	F	NONINDUCTIVE	R	P	DAL
RER50F1151&	1,150	20	F	NONINDUCTIVE	R	P	DAL
RER50F1181&	1,180	20	F	NONINDUCTIVE	R	P	DAL
RER50F1211&	1,210	20	F	NONINDUCTIVE	R	P	DAL
RER50F1241&	1,240	20	F	NONINDUCTIVE	R	P	DAL
RER50F1271&	1,270	20	F	NONINDUCTIVE	R	P	DAL
RER50F1301&	1,300	20	F	NONINDUCTIVE	R	P	DAL
RER50F1331&	1,330	20	F	NONINDUCTIVE	R	P	DAL
RER50F1371&	1,370	20	F	NONINDUCTIVE	R	P	DAL
RER50F1401&	1,400	20	F	NONINDUCTIVE	R	P	DAL
RER50F1431&	1,430	20	F	NONINDUCTIVE	R	P	DAL
RER50F1471&	1,470	20	F	NONINDUCTIVE	R	P	DAL
RER50F1501&	1,500	20	F	NONINDUCTIVE	R	P	DAL
RER50F1541&	1,540	20	F	NONINDUCTIVE	R	P	DAL
RER50F1581&	1,580	20	F	NONINDUCTIVE	R	P	DAL
RER50F1621&	1,620	20	F	NONINDUCTIVE	R	P	DAL
RER50F1651&	1,650	20	F	NONINDUCTIVE	R	P	DAL
RER50F1691&	1,690	20	F	NONINDUCTIVE	R	P	DAL
RER50F1741&	1,740	20	F	NONINDUCTIVE	R	P	DAL
RER50F1781&	1,780	20	F	NONINDUCTIVE	R	P	DAL
RER50F1821&	1,820	20	F	NONINDUCTIVE	R	P	DAL
RER50F1871&	1,870	20	F	NONINDUCTIVE	R	P	DAL
RER50F1911&	1,910	20	F	NONINDUCTIVE	R	P	DAL
RER50F1961&	1,960	20	F	NONINDUCTIVE	R	P	DAL
RER50F2001&	2,000	20	F	NONINDUCTIVE	R	P	DAL
RER50F2051&	2,050	20	F	NONINDUCTIVE	R	P	DAL
RER50F2101&	2,100	20	F	NONINDUCTIVE	R	P	DAL
RER50F2151&	2,150	20	F	NONINDUCTIVE	R	P	DAL
RER50F2211&	2,210	20	F	NONINDUCTIVE	R	P	DAL
RER50F2261&	2,260	20	F	NONINDUCTIVE	R	P	DAL
RER50F2321&	2,320	20	F	NONINDUCTIVE	R	P	DAL
RER50F2371&	2,370	20	F	NONINDUCTIVE	R	P	DAL
RER50F2431&	2,430	20	F	NONINDUCTIVE	R	P	DAL
RER50F2491&	2,490	20	F	NONINDUCTIVE	R	P	DAL
RER50F2551&	2,550	20	F	NONINDUCTIVE	R	P	DAL
RER50F2611&	2,610	20	F	NONINDUCTIVE	R	P	DAL
RER50F2671&	2,670	20	F	NONINDUCTIVE	R	P	DAL
RER50F2741&	2,740	20	F	NONINDUCTIVE	R	P	DAL
RER50F2801&	2,800	20	F	NONINDUCTIVE	R	P	DAL
RER50F2871&	2,870	20	F	NONINDUCTIVE	R	P	DAL
RER50F2941&	2,940	20	F	NONINDUCTIVE	R	P	DAL
RER50F3011&	3,010	20	F	NONINDUCTIVE	R	P	DAL
RER50F3091&	3,090	20	F	NONINDUCTIVE	R	P	DAL

RER50F3161&	3,160	20	F	NONINDUCTIVE	R	P	DAL
RER50F3241&	3,240	20	F	NONINDUCTIVE	R	P	DAL
RER50F3321&	3,320	20	F	NONINDUCTIVE	R	P	DAL
RER50F3401&	3,400	20	F	NONINDUCTIVE	R	P	DAL
RER50F3481&	3,480	20	F	NONINDUCTIVE	R	P	DAL
RER50F3571&	3,570	20	F	NONINDUCTIVE	R	P	DAL
RER50F3651&	3,650	20	F	NONINDUCTIVE	R	P	DAL
RER50F3741&	3,740	20	F	NONINDUCTIVE	R	P	DAL
RER50F3831&	3,830	20	F	NONINDUCTIVE	R	P	DAL
RER50F3921&	3,920	20	F	NONINDUCTIVE	R	P	DAL
RER50F4021&	4,020	20	F	NONINDUCTIVE	R	P	DAL
RER50F4121&	4,120	20	F	NONINDUCTIVE	R	P	DAL
RER50F4221&	4,220	20	F	NONINDUCTIVE	R	P	DAL
RER50F4321&	4,320	20	F	NONINDUCTIVE	R	P	DAL
RER50F4421&	4,420	20	F	NONINDUCTIVE	R	P	DAL
RER50F4531&	4,530	20	F	NONINDUCTIVE	R	P	DAL
RER50F4641&	4,640	20	F	NONINDUCTIVE	R	P	DAL
RER50F4751&	4,750	20	F	NONINDUCTIVE	R	P	DAL
RER50F4871&	4,870	20	F	NONINDUCTIVE	R	P	DAL
RER50F4991&	4,990	20	F	NONINDUCTIVE	R	P	DAL
RER50F5111&	5,110	20	F	NONINDUCTIVE	R	P	DAL
RER50F5231&	5,230	20	F	NONINDUCTIVE	R	P	DAL
RER50F5361&	5,360	20	F	NONINDUCTIVE	R	P	DAL
RER50F5491&	5,490	20	F	NONINDUCTIVE	R	P	DAL
RER50F5621&	5,620	20	F	NONINDUCTIVE	R	P	DAL
RER50F5761&	5,760	20	F	NONINDUCTIVE	R	P	DAL
RER50F5901&	5,900	20	F	NONINDUCTIVE	R	P	DAL
RER50F6041&	6,040	20	F	NONINDUCTIVE	R	P	DAL

RER50 RESISTORS DECADE BREAKDOWN

Click on the link below to see the associated parts selection listing:

Resistance Range
1.00 Ohms through 9.76 Ohms
10.0 Ohms through 97.6 Ohms
100 Ohms through 976 Ohms
1000 Ohms through 6040 Ohms

RER50 Wirewound Resistors: 1.00 Ohms through 9.76 Ohms

	Resistance	Power	Resistance		Level 1	Level 2	
Part Number	Value (Ohms)	Rating (W)	Tolerance	Winding	(FRL)(&)	(FRL)(&)	Manufacturer
RER50F1R00&	1.00	20	F	NONINDUCTIVE	R	P	DAL
RER50F1R02&	1.02	20	F	NONINDUCTIVE	R	P	DAL

RER50F1R05&	1.05	20	F	NONINDUCTIVE	R	P	DAL
RER50F1R07&	1.07	20	F	NONINDUCTIVE	R	P	DAL
RER50F1R10&	1.10	20	F	NONINDUCTIVE	R	P	DAL
RER50F1R13&	1.13	20	F	NONINDUCTIVE	R	P	DAL
RER50F1R15&	1.15	20	F	NONINDUCTIVE	R	P	DAL
RER50F1R18&	1.18	20	F	NONINDUCTIVE	R	P	DAL
RER50F1R21&	1.21	20	F	NONINDUCTIVE	R	P	DAL
RER50F1R24&	1.24	20	F	NONINDUCTIVE	R	P	DAL
RER50F1R27&	1.27	20	F	NONINDUCTIVE	R	P	DAL
RER50F1R30&	1.30	20	F	NONINDUCTIVE	R	P	DAL
RER50F1R33&	1.33	20	F	NONINDUCTIVE	R	P	DAL
RER50F1R37&	1.37	20	F	NONINDUCTIVE	R	P	DAL
	Resistance	Power	Resistance		Level 1	Level 2	
Part Number	Value (Ohms)	Rating (W)	Tolerance	Winding	(FRL)(&)	(FRL)(&)	Manufacturer
RER50F1R40&	1.40	20	F	NONINDUCTIVE	R	P	DAL
RER50F1R43&	1.43	20	F	NONINDUCTIVE	R	P	DAL
RER50F1R47&	1.47	20	F	NONINDUCTIVE	R	P	DAL
RER50F1R50&	1.50	20	F	NONINDUCTIVE	R	P	DAL
RER50F1R54&	1.54	20	F	NONINDUCTIVE	R	P	DAL
RER50F1R58&	1.58	20	F	NONINDUCTIVE	R	P	DAL
RER50F1R62&	1.62	20	F	NONINDUCTIVE	R	P	DAL
RER50F1R65&	1.65	20	F	NONINDUCTIVE	R	P	DAL
RER50F1R69&	1.69	20	F	NONINDUCTIVE	R	P	DAL
RER50F1R74&	1.74	20	F	NONINDUCTIVE	R	P	DAL
RER50F1R78&	1.78	20	F	NONINDUCTIVE	R	P	DAL
RER50F1R82&	1.82	20	F	NONINDUCTIVE	R	P	DAL
RER50F1R87&	1.87	20	F	NONINDUCTIVE	R	P	DAL
	Resistance	Power	Resistance		Level 1	Level 2	
Part Number	Value (Ohms)	Rating (W)	Tolerance	Winding	(FRL)(&)	(FRL)(&)	Manufacturer
RER50F1R91&	1.91	20	F	NONINDUCTIVE	R	P	DAL
RER50F1R96&	1.96	20	F	NONINDUCTIVE	R	P	DAL
RER50F2R00&	2.00	20	F	NONINDUCTIVE	R	P	DAL
RER50F2R05&	2.05	20	F	NONINDUCTIVE	R	P	DAL
RER50F2R10&	2.10	20	F	NONINDUCTIVE	R	P	DAL
RER50F2R15&	2.15	20	F	NONINDUCTIVE	R	P	DAL
RER50F2R21&	2.21	20	F	NONINDUCTIVE	R	P	DAL
RER50F2R26&	2.26	20	F	NONINDUCTIVE	R	P	DAL
RER50F2R32&	2.32	20	F	NONINDUCTIVE	R	P	DAL
RER50F2R37&	2.37	20	F	NONINDUCTIVE	R	P	DAL
RER50F2R43&	2.43	20	F	NONINDUCTIVE	R	P	DAL
RER50F2R49&	2.49	20	F	NONINDUCTIVE	R	P	DAL
RER50F2R55&	2.55	20	F	NONINDUCTIVE	R	P	DAL
RER50F2R61&	2.61	20	F	NONINDUCTIVE	R	P	DAL
	Resistance	Power	Resistance		Level 1	Level 2	
Part Number	Value (Ohms)	Rating (W)	Tolerance	Winding	(FRL)(&)	(FRL)(&)	Manufacturer
RER50F2R67&	2.67	20	F	NONINDUCTIVE	R	P	DAL
RER50F2R74&	2.74	20	F	NONINDUCTIVE	R	P	DAL

RER50F2R80&	2.80	20	F	NONINDUCTIVE	R	P	DAL
RER50F2R87&	2.87	20	F	NONINDUCTIVE	R	P	DAL
RER50F2R94&	2.94	20	F	NONINDUCTIVE	R	P	DAL
RER50F3R01&	3.01	20	F	NONINDUCTIVE	R	P	DAL
RER50F3R09&	3.09	20	F	NONINDUCTIVE	R	P	DAL
RER50F3R16&	3.16	20	F	NONINDUCTIVE	R	P	DAL
RER50F3R24&	3.24	20	F	NONINDUCTIVE	R	P	DAL
RER50F3R32&	3.32	20	F	NONINDUCTIVE	R	P	DAL
RER50F3R40&	3.40	20	F	NONINDUCTIVE	R	P	DAL
RER50F3R48&	3.48	20	F	NONINDUCTIVE	R	P	DAL
RER50F3R57&	3.57	20	F	NONINDUCTIVE	R	P	DAL
	Resistance	Power	Resistance		Level 1	Level 2	
Part Number	Value (Ohms)	Rating (W)	Tolerance	Winding	(FRL)(&)	(FRL)(&)	Manufacturer
RER50F3R65&	3.65	20	F	NONINDUCTIVE	R	P	DAL
RER50F3R74&	3.74	20	F	NONINDUCTIVE	R	P	DAL
RER50F3R83&	3.83	20	F	NONINDUCTIVE	R	P	DAL
RER50F3R92&	3.92	20	F	NONINDUCTIVE	R	P	DAL
RER50F4R02&	4.02	20	F	NONINDUCTIVE	R	P	DAL
RER50F4R12&	4.12	20	F	NONINDUCTIVE	R	P	DAL
RER50F4R22&	4.22	20	F	NONINDUCTIVE	R	P	DAL
RER50F4R32&	4.32	20	F	NONINDUCTIVE	R	P	DAL
RER50F4R42&	4.42	20	F	NONINDUCTIVE	R	P	DAL
RER50F4R53&	4.53	20	F	NONINDUCTIVE	R	P	DAL
RER50F4R64&	4.64	20	F	NONINDUCTIVE	R	P	DAL
RER50F4R75&	4.75	20	F	NONINDUCTIVE	R	P	DAL
RER50F4R87&	4.87	20	F	NONINDUCTIVE	R	P	DAL
RER50F4R99&	4.99	20	F	NONINDUCTIVE	R	P	DAL
	Resistance	Power	Resistance		Level 1	Level 2	
Part Number	Value (Ohms)	Rating (W)	Tolerance	Winding	(FRL)(&)	(FRL)(&)	Manufacturer
RER50F5R11&	5.11	20	F	NONINDUCTIVE	R	P	DAL
RER50F5R23&	5.23	20	F	NONINDUCTIVE	R	P	DAL
RER50F5R36&	5.36	20	F	NONINDUCTIVE	R	P	DAL
RER50F5R49&	5.49	20	F	NONINDUCTIVE	R	P	DAL
RER50F5R62&	5.62	20	F	NONINDUCTIVE	R	P	DAL
RER50F5R76&	5.76	20	F	NONINDUCTIVE	R	P	DAL
RER50F5R90&	5.90	20	F	NONINDUCTIVE	R	P	DAL
RER50F6R04&	6.04	20	F	NONINDUCTIVE	R	P	DAL
RER50F6R19&	6.19	20	F	NONINDUCTIVE	R	P	DAL
RER50F6R34&	6.34	20	F	NONINDUCTIVE	R	P	DAL
RER50F6R49&	6.49	20	F	NONINDUCTIVE	R	P	DAL
RER50F6R65&	6.65	20	F	NONINDUCTIVE	R	P	DAL
RER50F6R81&	6.81	20	F	NONINDUCTIVE	R	P	DAL
	Resistance	Power	Resistance		Level 1	Level 2	
Part Number	Value (Ohms)	Rating (W)	Tolerance	Winding	(FRL)(&)	(FRL)(&)	Manufacturer
RER50F6R98&	6.98	20	F	NONINDUCTIVE	R	P	DAL
RER50F7R15&	7.15	20	F	NONINDUCTIVE	R	P	DAL
RER50F7R32&	7.32	20	F	NONINDUCTIVE	R	P	DAL

RER50F7R50&	7.50	20	F	NONINDUCTIVE	R	P	DAL
RER50F7R68&	7.68	20	F	NONINDUCTIVE	R	P	DAL
RER50F7R87&	7.87	20	F	NONINDUCTIVE	R	P	DAL
RER50F8R06&	8.06	20	F	NONINDUCTIVE	R	P	DAL
RER50F8R25&	8.25	20	F	NONINDUCTIVE	R	P	DAL
RER50F8R45&	8.45	20	F	NONINDUCTIVE	R	P	DAL
RER50F8R66&	8.66	20	F	NONINDUCTIVE	R	P	DAL
RER50F8R87&	8.87	20	F	NONINDUCTIVE	R	P	DAL
RER50F9R09&	9.09	20	F	NONINDUCTIVE	R	P	DAL
RER50F9R31&	9.31	20	F	NONINDUCTIVE	R	P	DAL
RER50F9R53&	9.53	20	F	NONINDUCTIVE	R	P	DAL
RER50F9R76&	9.76	20	F	NONINDUCTIVE	R	P	DAL
	Resistance	Power	Resistance		Level 1	Level 2	
Part Number	Value (Ohms)	Rating (W)	Tolerance	Winding	(FRL)(&)	(FRL)(&)	Manufacturer

RER50 Wirewound Resistors: 10.0 Ohms through 97.6 Ohms

	Resistance	Power	Resistance		Level 1	Level 2	
Part Number	Value (Ohms)	Rating (W)	Tolerance	Winding	(FRL)(&)	(FRL)(&)	Manufacturer
RER50F10R0&	10.0	20	F	NONINDUCTIVE	R	P	DAL
RER50F10R2&	10.2	20	F	NONINDUCTIVE	R	P	DAL
RER50F10R5&	10.5	20	F	NONINDUCTIVE	R	P	DAL
RER50F10R7&	10.7	20	F	NONINDUCTIVE	R	P	DAL
RER50F11R0&	11.0	20	F	NONINDUCTIVE	R	P	DAL
RER50F11R3&	11.3	20	F	NONINDUCTIVE	R	P	DAL
RER50F11R5&	11.5	20	F	NONINDUCTIVE	R	P	DAL
RER50F11R8&	11.8	20	F	NONINDUCTIVE	R	P	DAL
RER50F12R1&	12.1	20	F	NONINDUCTIVE	R	P	DAL
RER50F12R4&	12.4	20	F	NONINDUCTIVE	R	P	DAL
RER50F12R7&	12.7	20	F	NONINDUCTIVE	R	P	DAL
RER50F13R0&	13.0	20	F	NONINDUCTIVE	R	P	DAL
RER50F13R3&	13.3	20	F	NONINDUCTIVE	R	P	DAL
RER50F13R7&	13.7	20	F	NONINDUCTIVE	R	P	DAL
	Resistance	Power	Resistance		Level 1	Level 2	
Part Number	Value (Ohms)	Rating (W)	Tolerance	Winding	(FRL)(&)	(FRL)(&)	Manufacturer
RER50F14R0&	14.0	20	F	NONINDUCTIVE	R	P	DAL
RER50F14R3&	14.3	20	F	NONINDUCTIVE	R	P	DAL
RER50F14R7&	14.7	20	F	NONINDUCTIVE	R	P	DAL
RER50F15R0&	15.0	20	F	NONINDUCTIVE	R	P	DAL
RER50F15R4&	15.4	20	F	NONINDUCTIVE	R	P	DAL
RER50F15R8&	15.8	20	F	NONINDUCTIVE	R	P	DAL
RER50F16R2&	16.2	20	F	NONINDUCTIVE	R	P	DAL
RER50F16R5&	16.5	20	F	NONINDUCTIVE	R	P	DAL
RER50F16R9&	16.9	20	F	NONINDUCTIVE	R	P	DAL
RER50F17R4&	17.4	20	F	NONINDUCTIVE	R	P	DAL

RER50F17R8&	17.8	20	F	NONINDUCTIVE	R	P	DAL
RER50F18R2&	18.2	20	F	NONINDUCTIVE	R	P	DAL
RER50F18R7&	18.7	20	F	NONINDUCTIVE	R	P	DAL
	Resistance	Power	Resistance		Level 1	Level 2	
Part Number	Value (Ohms)	Rating (W)	Tolerance	Winding	(FRL)(&)	(FRL)(&)	Manufacturer
RER50F19R1&	19.1	20	F	NONINDUCTIVE	R	P	DAL
RER50F19R6&	19.6	20	F	NONINDUCTIVE	R	P	DAL
RER50F20R0&	20.0	20	F	NONINDUCTIVE	R	P	DAL
RER50F20R5&	20.5	20	F	NONINDUCTIVE	R	P	DAL
RER50F21R0&	21.0	20	F	NONINDUCTIVE	R	P	DAL
RER50F21R5&	21.5	20	F	NONINDUCTIVE	R	P	DAL
RER50F22R1&	22.1	20	F	NONINDUCTIVE	R	P	DAL
RER50F22R6&	22.6	20	F	NONINDUCTIVE	R	P	DAL
RER50F23R2&	23.2	20	F	NONINDUCTIVE	R	P	DAL
RER50F23R7&	23.7	20	F	NONINDUCTIVE	R	P	DAL
RER50F24R3&	24.3	20	F	NONINDUCTIVE	R	P	DAL
RER50F24R9&	24.9	20	F	NONINDUCTIVE	R	P	DAL
RER50F25R5&	25.5	20	F	NONINDUCTIVE	R	P	DAL
RER50F26R1&	26.1	20	F	NONINDUCTIVE	R	P	DAL
	Resistance	Power	Resistance		Level 1	Level 2	
Part Number	Value (Ohms)	Rating (W)	Tolerance	Winding	(FRL)(&)	(FRL)(&)	Manufacturer
RER50F26R7&	26.7	20	F	NONINDUCTIVE	R	P	DAL
RER50F27R4&	27.4	20	F	NONINDUCTIVE	R	P	DAL
RER50F28R0&	28.0	20	F	NONINDUCTIVE	R	P	DAL
RER50F28R7&	28.7	20	F	NONINDUCTIVE	R	P	DAL
RER50F29R4&	29.4	20	F	NONINDUCTIVE	R	P	DAL
RER50F30R1&	30.1	20	F	NONINDUCTIVE	R	P	DAL
RER50F30R9&	30.9	20	F	NONINDUCTIVE	R	P	DAL
RER50F31R6&	31.6	20	F	NONINDUCTIVE	R	P	DAL
RER50F32R4&	32.4	20	F	NONINDUCTIVE	R	P	DAL
RER50F33R2&	33.2	20	F	NONINDUCTIVE	R	P	DAL
RER50F34R0&	34.0	20	F	NONINDUCTIVE	R	P	DAL
RER50F34R8&	34.8	20	F	NONINDUCTIVE	R	P	DAL
RER50F35R7&	35.7	20	F	NONINDUCTIVE	R	P	DAL
	Resistance	Power	Resistance		Level 1	Level 2	
Part Number	Value (Ohms)	Rating (W)	Tolerance	Winding	(FRL)(&)	(FRL)(&)	Manufacturer
RER50F36R5&	36.5	20	F	NONINDUCTIVE	R	P	DAL
RER50F37R4&	37.4	20	F	NONINDUCTIVE	R	P	DAL
RER50F38R3&	38.3	20	F	NONINDUCTIVE	R	P	DAL
RER50F39R2&	39.2	20	F	NONINDUCTIVE	R	P	DAL
RER50F40R2&	40.2	20	F	NONINDUCTIVE	R	P	DAL
RER50F41R2&	41.2	20	F	NONINDUCTIVE	R	P	DAL
RER50F42R2&	42.2	20	F	NONINDUCTIVE	R	P	DAL
RER50F43R2&	43.2	20	F	NONINDUCTIVE	R	P	DAL
RER50F44R2&	44.2	20	F	NONINDUCTIVE	R	P	DAL
RER50F45R3&	45.3	20	F	NONINDUCTIVE	R	P	DAL
RER50F46R4&	46.4	20	F	NONINDUCTIVE	R	P	DAL

RER50F47R5&	47.5	20	F	NONINDUCTIVE	R	P	DAL
RER50F48R7&	48.7	20	F	NONINDUCTIVE	R	P	DAL
RER50F49R9&	49.9	20	F	NONINDUCTIVE	R	P	DAL
	Resistance	Power	Resistance		Level 1	Level 2	
Part Number	Value (Ohms)	Rating (W)	Tolerance	Winding	(FRL)(&)	(FRL)(&)	Manufacturer
RER50F51R1&	51.1	20	F	NONINDUCTIVE	R	P	DAL
RER50F52R3&	52.3	20	F	NONINDUCTIVE	R	P	DAL
RER50F53R6&	53.6	20	F	NONINDUCTIVE	R	P	DAL
RER50F54R9&	54.9	20	F	NONINDUCTIVE	R	P	DAL
RER50F56R2&	56.2	20	F	NONINDUCTIVE	R	P	DAL
RER50F57R6&	57.6	20	F	NONINDUCTIVE	R	P	DAL
RER50F59R0&	59.0	20	F	NONINDUCTIVE	R	P	DAL
RER50F60R4&	60.4	20	F	NONINDUCTIVE	R	P	DAL
RER50F61R9&	61.9	20	F	NONINDUCTIVE	R	P	DAL
RER50F63R4&	63.4	20	F	NONINDUCTIVE	R	P	DAL
RER50F64R9&	64.9	20	F	NONINDUCTIVE	R	P	DAL
RER50F66R5&	66.5	20	F	NONINDUCTIVE	R	P	DAL
RER50F68R1&	68.1	20	F	NONINDUCTIVE	R	P	DAL
	Resistance	Power	Resistance		Level 1	Level 2	
Part Number	Value (Ohms)	Rating (W)	Tolerance	Winding	(FRL)(&)	(FRL)(&)	Manufacturer
RER50F69R8&	69.8	20	F	NONINDUCTIVE	R	P	DAL
RER50F71R5&	71.5	20	F	NONINDUCTIVE	R	P	DAL
RER50F73R2&	73.2	20	F	NONINDUCTIVE	R	P	DAL
RER50F75R0&	75.0	20	F	NONINDUCTIVE	R	P	DAL
RER50F76R8&	76.8	20	F	NONINDUCTIVE	R	P	DAL
RER50F78R7&	78.7	20	F	NONINDUCTIVE	R	P	DAL
RER50F80R6&	80.6	20	F	NONINDUCTIVE	R	P	DAL
RER50F82R5&	82.5	20	F	NONINDUCTIVE	R	P	DAL
RER50F84R5&	84.5	20	F	NONINDUCTIVE	R	P	DAL
RER50F86R6&	86.6	20	F	NONINDUCTIVE	R	P	DAL
RER50F88R7&	88.7	20	F	NONINDUCTIVE	R	P	DAL
RER50F90R9&	90.8	20	F	NONINDUCTIVE	R	P	DAL
RER50F93R1&	93.1	20	F	NONINDUCTIVE	R	P	DAL
RER50F95R3&	95.3	20	F	NONINDUCTIVE	R	P	DAL
RER50F97R6&	97.6	20	F	NONINDUCTIVE	R	P	DAL
	Resistance	Power	Resistance		Level 1	Level 2	
Part Number	Value (Ohms)	Rating (W)	Tolerance	Winding	(FRL)(&)	(FRL)(&)	Manufacturer

RER50 Wirewound Resistors: 100 Ohms through 976 Ohms

	Resistance	Power	Resistance		Level 1	Level 2	
Part Number	Value (Ohms)	Rating (W)	Tolerance	Winding	(FRL)(&)	(FRL)(&)	Manufacturer
RER50F100R&	100	20	F	NONINDUCTIVE	R	P	DAL
RER50F102R&	102	20	F	NONINDUCTIVE	R	P	DAL
RER50F105R&	105	20	F	NONINDUCTIVE	R	P	DAL

RER50F107R&	107	20	F	NONINDUCTIVE	R	P	DAL
RER50F110R&	110	20	F	NONINDUCTIVE	R	P	DAL
RER50F113R&	113	20	F	NONINDUCTIVE	R	P	DAL
RER50F115R&	115	20	F	NONINDUCTIVE	R	P	DAL
RER50F118R&	118	20	F	NONINDUCTIVE	R	P	DAL
RER50F121R&	121	20	F	NONINDUCTIVE	R	P	DAL
RER50F124R&	124	20	F	NONINDUCTIVE	R	P	DAL
RER50F127R&	127	20	F	NONINDUCTIVE	R	P	DAL
RER50F130R&	130	20	F	NONINDUCTIVE	R	P	DAL
RER50F133R&	133	20	F	NONINDUCTIVE	R	P	DAL
RER50F137R&	137	20	F	NONINDUCTIVE	R	P	DAL
	Resistance	Power	Resistance		Level 1	Level 2	
Part Number	Value (Ohms)	Rating (W)	Tolerance	Winding	(FRL)(&)	(FRL)(&)	Manufacturer
RER50F140R&	140	20	F	NONINDUCTIVE	R	P	DAL
RER50F143R&	143	20	F	NONINDUCTIVE	R	P	DAL
RER50F147R&	147	20	F	NONINDUCTIVE	R	P	DAL
RER50F150R&	150	20	F	NONINDUCTIVE	R	P	DAL
RER50F154R&	154	20	F	NONINDUCTIVE	R	P	DAL
RER50F158R&	158	20	F	NONINDUCTIVE	R	P	DAL
RER50F162R&	162	20	F	NONINDUCTIVE	R	P	DAL
RER50F165R&	165	20	F	NONINDUCTIVE	R	P	DAL
RER50F169R&	169	20	F	NONINDUCTIVE	R	P	DAL
RER50F174R&	174	20	F	NONINDUCTIVE	R	P	DAL
RER50F178R&	178	20	F	NONINDUCTIVE	R	P	DAL
RER50F182R&	182	20	F	NONINDUCTIVE	R	P	DAL
RER50F187R&	187	20	F	NONINDUCTIVE	R	P	DAL
	Resistance	Power	Resistance		Level 1	Level 2	
Part Number	Value (Ohms)	Rating (W)	Tolerance	Winding	(FRL)(&)	(FRL)(&)	Manufacturer
RER50F191R&	191	20	F	NONINDUCTIVE	R	P	DAL
RER50F196R&	196	20	F	NONINDUCTIVE	R	P	DAL
RER50F200R&	200	20	F	NONINDUCTIVE	R	P	DAL
RER50F205R&	205	20	F	NONINDUCTIVE	R	P	DAL
RER50F210R&	210	20	F	NONINDUCTIVE	R	P	DAL
RER50F215R&	215	20	F	NONINDUCTIVE	R	P	DAL
RER50F221R&	221	20	F	NONINDUCTIVE	R	P	DAL
RER50F226R&	226	20	F	NONINDUCTIVE	R	P	DAL
RER50F232R&	232	20	F	NONINDUCTIVE	R	P	DAL
RER50F237R&	237	20	F	NONINDUCTIVE	R	P	DAL
RER50F243R&	243	20	F	NONINDUCTIVE	R	P	DAL
RER50F249R&	249	20	F	NONINDUCTIVE	R	P	DAL
RER50F255R&	255	20	F	NONINDUCTIVE	R	P	DAL
RER50F261R&	261	20	F	NONINDUCTIVE	R	P	DAL
	Resistance	Power	Resistance		Level 1	Level 2	
Part Number	Value (Ohms)	Rating (W)	Tolerance	Winding	(FRL)(&)	(FRL)(&)	Manufacturer
RER50F267R&	267	20	F	NONINDUCTIVE	R	P	DAL
RER50F274R&	274	20	F	NONINDUCTIVE	R	P	DAL
RER50F280R&	280	20	F	NONINDUCTIVE	R	P	DAL

RER50F287R&	287	20	F	NONINDUCTIVE	R	P	DAL
RER50F294R&	294	20	F	NONINDUCTIVE	R	P	DAL
RER50F301R&	301	20	F	NONINDUCTIVE	R	P	DAL
RER50F309R&	309	20	F	NONINDUCTIVE	R	P	DAL
RER50F316R&	316	20	F	NONINDUCTIVE	R	P	DAL
RER50F324R&	324	20	F	NONINDUCTIVE	R	P	DAL
RER50F332R&	332	20	F	NONINDUCTIVE	R	P	DAL
RER50F340R&	340	20	F	NONINDUCTIVE	R	P	DAL
RER50F348R&	348	20	F	NONINDUCTIVE	R	P	DAL
RER50F357R&	357	20	F	NONINDUCTIVE	R	P	DAL
	Resistance	Power	Resistance		Level 1	Level 2	
Part Number	Value (Ohms)	Rating (W)	Tolerance	Winding	(FRL)(&)	(FRL)(&)	Manufacturer
RER50F365R&	365	20	F	NONINDUCTIVE	R	P	DAL
RER50F374R&	374	20	F	NONINDUCTIVE	R	P	DAL
RER50F383R&	383	20	F	NONINDUCTIVE	R	P	DAL
RER50F392R&	392	20	F	NONINDUCTIVE	R	P	DAL
RER50F402R&	402	20	F	NONINDUCTIVE	R	P	DAL
RER50F412R&	412	20	F	NONINDUCTIVE	R	P	DAL
RER50F422R&	422	20	F	NONINDUCTIVE	R	P	DAL
RER50F432R&	432	20	F	NONINDUCTIVE	R	P	DAL
RER50F442R&	442	20	F	NONINDUCTIVE	R	P	DAL
RER50F453R&	453	20	F	NONINDUCTIVE	R	P	DAL
RER50F464R&	464	20	F	NONINDUCTIVE	R	P	DAL
RER50F475R&	475	20	F	NONINDUCTIVE	R	P	DAL
RER50F487R&	487	20	F	NONINDUCTIVE	R	P	DAL
RER50F499R&	499	20	F	NONINDUCTIVE	R	P	DAL
	Resistance	Power	Resistance		Level 1	Level 2	
Part Number	Value (Ohms)	Rating (W)	Tolerance	Winding	(FRL)(&)	(FRL)(&)	Manufacturer
RER50F511R&	511	20	F	NONINDUCTIVE	R	P	DAL
RER50F523R&	523	20	F	NONINDUCTIVE	R	P	DAL
RER50F536R&	536	20	F	NONINDUCTIVE	R	P	DAL
RER50F549R&	549	20	F	NONINDUCTIVE	R	P	DAL
RER50F562R&	562	20	F	NONINDUCTIVE	R	P	DAL
RER50F576R&	576	20	F	NONINDUCTIVE	R	P	DAL
RER50F590R&	590	20	F	NONINDUCTIVE	R	P	DAL
RER50F604R&	604	20	F	NONINDUCTIVE	R	P	DAL
RER50F619R&	619	20	F	NONINDUCTIVE	R	P	DAL
RER50F634R&	634	20	F	NONINDUCTIVE	R	P	DAL
RER50F649R&	649	20	F	NONINDUCTIVE	R	P	DAL
RER50F665R&	665	20	F	NONINDUCTIVE	R	P	DAL
RER50F681R&	681	20	F	NONINDUCTIVE	R	P	DAL
	Resistance	Power	Resistance		Level 1	Level 2	
Part Number	Value (Ohms)	Rating (W)	Tolerance	Winding	(FRL)(&)	(FRL)(&)	Manufacturer
RER50F698R&	698	20	F	NONINDUCTIVE	R	P	DAL
RER50F715R&	715	20	F	NONINDUCTIVE	R	P	DAL
RER50F732R&	732	20	F	NONINDUCTIVE	R	P	DAL
RER50F750R&	750	20	F	NONINDUCTIVE	R	P	DAL

RER50F768R&	768	20	F	NONINDUCTIVE	R	P	DAL
RER50F787R&	787	20	F	NONINDUCTIVE	R	P	DAL
RER50F806R&	806	20	F	NONINDUCTIVE	R	P	DAL
RER50F825R&	825	20	F	NONINDUCTIVE	R	P	DAL
RER50F845R&	845	20	F	NONINDUCTIVE	R	P	DAL
RER50F866R&	866	20	F	NONINDUCTIVE	R	P	DAL
RER50F887R&	887	20	F	NONINDUCTIVE	R	P	DAL
RER50F909R&	909	20	F	NONINDUCTIVE	R	P	DAL
RER50F931R&	931	20	F	NONINDUCTIVE	R	P	DAL
RER50F953R&	953	20	F	NONINDUCTIVE	R	P	DAL
RER50F976R&	976	20	F	NONINDUCTIVE	R	P	DAL
	Resistance	Power	Resistance		Level 1	Level 2	
Part Number	Value (Ohms)	Rating (W)	Tolerance	Winding	(FRL)(&)	(FRL)(&)	Manufacturer

RER50 Wirewound Resistors: 1000 Ohms through 6040 Ohms

	Resistance	Power	Resistance		Level 1	Level 2	
Part Number	Value (Ohms)	Rating (W)	Tolerance	Winding	(FRL)(&)	(FRL)(&)	Manufacturer
RER50F1001&	1,000	20	F	NONINDUCTIVE	R	P	DAL
RER50F1021&	1,020	20	F	NONINDUCTIVE	R	P	DAL
RER50F1051&	1,050	20	F	NONINDUCTIVE	R	P	DAL
RER50F1071&	1,070	20	F	NONINDUCTIVE	R	P	DAL
RER50F1101&	1,100	20	F	NONINDUCTIVE	R	P	DAL
RER50F1131&	1,130	20	F	NONINDUCTIVE	R	P	DAL
RER50F1151&	1,150	20	F	NONINDUCTIVE	R	P	DAL
RER50F1181&	1,180	20	F	NONINDUCTIVE	R	P	DAL
RER50F1211&	1,210	20	F	NONINDUCTIVE	R	P	DAL
RER50F1241&	1,240	20	F	NONINDUCTIVE	R	P	DAL
RER50F1271&	1,270	20	F	NONINDUCTIVE	R	P	DAL
RER50F1301&	1,300	20	F	NONINDUCTIVE	R	P	DAL
RER50F1331&	1,330	20	F	NONINDUCTIVE	R	P	DAL
RER50F1371&	1,370	20	F	NONINDUCTIVE	R	P	DAL
	Resistance	Power	Resistance		Level 1	Level 2	
Part Number	Value (Ohms)	Rating (W)	Tolerance	Winding	(FRL)(&)	(FRL)(&)	Manufacturer
RER50F1401&	1,400	20	F	NONINDUCTIVE	R	P	DAL
RER50F1431&	1,430	20	F	NONINDUCTIVE	R	P	DAL
RER50F1471&	1,470	20	F	NONINDUCTIVE	R	P	DAL
RER50F1501&	1,500	20	F	NONINDUCTIVE	R	P	DAL
RER50F1541&	1,540	20	F	NONINDUCTIVE	R	P	DAL
RER50F1581&	1,580	20	F	NONINDUCTIVE	R	P	DAL
RER50F1621&	1,620	20	F	NONINDUCTIVE	R	P	DAL
RER50F1651&	1,650	20	F	NONINDUCTIVE	R	P	DAL
RER50F1691&	1,690	20	F	NONINDUCTIVE	R	P	DAL
RER50F1741&	1,740	20	F	NONINDUCTIVE	R	P	DAL
RER50F1781&	1,780	20	F	NONINDUCTIVE	R	P	DAL

RER50F1821&	1,820	20	F	NONINDUCTIVE	R	P	DAL
RER50F1871&	1,870	20	F	NONINDUCTIVE	R	P	DAL
	Resistance	Power	Resistance		Level 1	Level 2	
Part Number	Value (Ohms)	Rating (W)	Tolerance	Winding	(FRL)(&)	(FRL)(&)	Manufacturer
RER50F1911&	1,910	20	F	NONINDUCTIVE	R	P	DAL
RER50F1961&	1,960	20	F	NONINDUCTIVE	R	P	DAL
RER50F2001&	2,000	20	F	NONINDUCTIVE	R	P	DAL
RER50F2051&	2,050	20	F	NONINDUCTIVE	R	P	DAL
RER50F2101&	2,100	20	F	NONINDUCTIVE	R	P	DAL
RER50F2151&	2,150	20	F	NONINDUCTIVE	R	P	DAL
RER50F2211&	2,210	20	F	NONINDUCTIVE	R	P	DAL
RER50F2261&	2,260	20	F	NONINDUCTIVE	R	P	DAL
RER50F2321&	2,320	20	F	NONINDUCTIVE	R	P	DAL
RER50F2371&	2,370	20	F	NONINDUCTIVE	R	P	DAL
RER50F2431&	2,430	20	F	NONINDUCTIVE	R	P	DAL
RER50F2491&	2,490	20	F	NONINDUCTIVE	R	P	DAL
RER50F2551&	2,550	20	F	NONINDUCTIVE	R	P	DAL
RER50F2611&	2,610	20	F	NONINDUCTIVE	R	P	DAL
	Resistance	Power	Resistance		Level 1	Level 2	
Part Number	Value (Ohms)	Rating (W)	Tolerance	Winding	(FRL)(&)	(FRL)(&)	Manufacturer
RER50F2671&	2,670	20	F	NONINDUCTIVE	R	P	DAL
RER50F2741&	2,740	20	F	NONINDUCTIVE	R	P	DAL
RER50F2801&	2,800	20	F	NONINDUCTIVE	R	P	DAL
RER50F2871&	2,870	20	F	NONINDUCTIVE	R	P	DAL
RER50F2941&	2,940	20	F	NONINDUCTIVE	R	P	DAL
RER50F3011&	3,010	20	F	NONINDUCTIVE	R	P	DAL
RER50F3091&	3,090	20	F	NONINDUCTIVE	R	P	DAL
RER50F3161&	3,160	20	F	NONINDUCTIVE	R	P	DAL
RER50F3241&	3,240	20	F	NONINDUCTIVE	R	P	DAL
RER50F3321&	3,320	20	F	NONINDUCTIVE	R	P	DAL
RER50F3401&	3,400	20	F	NONINDUCTIVE	R	P	DAL
RER50F3481&	3,480	20	F	NONINDUCTIVE	R	P	DAL
RER50F3571&	3,570	20	F	NONINDUCTIVE	R	P	DAL
	Resistance	Power	Resistance		Level 1	Level 2	
Part Number	Value (Ohms)	Rating (W)	Tolerance	Winding	(FRL)(&)	(FRL)(&)	Manufacturer
RER50F3651&	3,650	20	F	NONINDUCTIVE	R	P	DAL
RER50F3741&	3,740	20	F	NONINDUCTIVE	R	P	DAL
RER50F3831&	3,830	20	F	NONINDUCTIVE	R	P	DAL
RER50F3921&	3,920	20	F	NONINDUCTIVE	R	P	DAL
RER50F4021&	4,020	20	F	NONINDUCTIVE	R	P	DAL
RER50F4121&	4,120	20	F	NONINDUCTIVE	R	P	DAL
RER50F4221&	4,220	20	F	NONINDUCTIVE	R	P	DAL
RER50F4321&	4,320	20	F	NONINDUCTIVE	R	P	DAL
RER50F4421&	4,420	20	F	NONINDUCTIVE	R	P	DAL
RER50F4531&	4,530	20	F	NONINDUCTIVE	R	P	DAL
RER50F4641&	4,640	20	F	NONINDUCTIVE	R	P	DAL
RER50F4751&	4,750	20	F	NONINDUCTIVE	R	P	DAL

RER50F4871&	4,870	20	F	NONINDUCTIVE	R	P	DAL
RER50F4991&	4,990	20	F	NONINDUCTIVE	R	P	DAL
	Resistance	Power	Resistance		Level 1	Level 2	
Part Number	Value (Ohms)	Rating (W)	Tolerance	Winding	(FRL)(&)	(FRL)(&)	Manufacturer
RER50F5111&	5,110	20	F	NONINDUCTIVE	R	P	DAL
RER50F5231&	5,230	20	F	NONINDUCTIVE	R	P	DAL
RER50F5361&	5,360	20	F	NONINDUCTIVE	R	P	DAL
RER50F5491&	5,490	20	F	NONINDUCTIVE	R	P	DAL
RER50F5621&	5,620	20	F	NONINDUCTIVE	R	P	DAL
RER50F5761&	5,760	20	F	NONINDUCTIVE	R	P	DAL
RER50F5901&	5,900	20	F	NONINDUCTIVE	R	P	DAL
RER50F6041&	6,040	20	F	NONINDUCTIVE	R	P	DAL

RER55 Wirewound Resistors

	Resistance	Power	Resistance		Level 1	Level 2	
Part Number	Value (Ohms)	Rating (W)	Tolerance	Winding	(FRL)(&)	(FRL)(&)	Manufacturer
RER55F1R00&	1.00	30	F	NONINDUCTIVE	R	P	DAL
RER55F1R02&	1.02	30	F	NONINDUCTIVE	R	P	DAL
RER55F1R05&	1.05	30	F	NONINDUCTIVE	R	P	DAL
RER55F1R07&	1.07	30	F	NONINDUCTIVE	R	P	DAL
RER55F1R10&	1.10	30	F	NONINDUCTIVE	R	P	DAL
RER55F1R13&	1.13	30	F	NONINDUCTIVE	R	P	DAL
RER55F1R15&	1.15	30	F	NONINDUCTIVE	R	P	DAL
RER55F1R18&	1.18	30	F	NONINDUCTIVE	R	P	DAL
RER55F1R21&	1.21	30	F	NONINDUCTIVE	R	P	DAL
RER55F1R24&	1.24	30	F	NONINDUCTIVE	R	P	DAL
RER55F1R27&	1.27	30	F	NONINDUCTIVE	R	P	DAL
RER55F1R30&	1.30	30	F	NONINDUCTIVE	R	P	DAL
RER55F1R33&	1.33	30	F	NONINDUCTIVE	R	P	DAL
RER55F1R37&	1.37	30	F	NONINDUCTIVE	R	P	DAL
RER55F1R40&	1.40	30	F	NONINDUCTIVE	R	P	DAL
RER55F1R43&	1.43	30	F	NONINDUCTIVE	R	P	DAL
RER55F1R47&	1.47	30	F	NONINDUCTIVE	R	P	DAL
RER55F1R50&	1.50	30	F	NONINDUCTIVE	R	P	DAL
RER55F1R54&	1.54	30	F	NONINDUCTIVE	R	P	DAL
RER55F1R58&	1.58	30	F	NONINDUCTIVE	R	P	DAL
RER55F1R62&	1.62	30	F	NONINDUCTIVE	R	P	DAL
RER55F1R65&	1.65	30	F	NONINDUCTIVE	R	P	DAL
RER55F1R69&	1.69	30	F	NONINDUCTIVE	R	P	DAL
RER55F1R74&	1.74	30	F	NONINDUCTIVE	R	P	DAL
RER55F1R78&	1.78	30	F	NONINDUCTIVE	R	P	DAL
RER55F1R82&	1.82	30	F	NONINDUCTIVE	R	P	DAL
RER55F1R87&	1.87	30	F	NONINDUCTIVE	R	P	DAL
RER55F1R91&	1.91	30	F	NONINDUCTIVE	R	P	DAL

RER55F1R96&	1.96	30	F	NONINDUCTIVE	R	P	DAL
RER55F2R00&	2.00	30	F	NONINDUCTIVE	R	P	DAL
RER55F2R05&	2.05	30	F	NONINDUCTIVE	R	P	DAL
RER55F2R10&	2.10	30	F	NONINDUCTIVE	R	P	DAL
RER55F2R15&	2.15	30	F	NONINDUCTIVE	R	P	DAL
RER55F2R21&	2.21	30	F	NONINDUCTIVE	R	P	DAL
RER55F2R26&	2.26	30	F	NONINDUCTIVE	R	P	DAL
RER55F2R32&	2.32	30	F	NONINDUCTIVE	R	P	DAL
RER55F2R37&	2.37	30	F	NONINDUCTIVE	R	P	DAL
RER55F2R43&	2.43	30	F	NONINDUCTIVE	R	P	DAL
RER55F2R49&	2.49	30	F	NONINDUCTIVE	R	P	DAL
RER55F2R55&	2.55	30	F	NONINDUCTIVE	R	P	DAL
RER55F2R61&	2.61	30	F	NONINDUCTIVE	R	P	DAL
RER55F2R67&	2.67	30	F	NONINDUCTIVE	R	P	DAL
RER55F2R74&	2.74	30	F	NONINDUCTIVE	R	P	DAL
RER55F2R80&	2.80	30	F	NONINDUCTIVE	R	P	DAL
RER55F2R87&	2.87	30	F	NONINDUCTIVE	R	P	DAL
RER55F2R94&	2.94	30	F	NONINDUCTIVE	R	P	DAL
RER55F3R01&	3.01	30	F	NONINDUCTIVE	R	P	DAL
RER55F3R09&	3.09	30	F	NONINDUCTIVE	R	P	DAL
RER55F3R16&	3.16	30	F	NONINDUCTIVE	R	P	DAL
RER55F3R24&	3.24	30	F	NONINDUCTIVE	R	P	DAL
RER55F3R32&	3.32	30	F	NONINDUCTIVE	R	P	DAL
RER55F3R40&	3.40	30	F	NONINDUCTIVE	R	P	DAL
RER55F3R48&	3.48	30	F	NONINDUCTIVE	R	P	DAL
RER55F3R57&	3.57	30	F	NONINDUCTIVE	R	P	DAL
RER55F3R65&	3.65	30	F	NONINDUCTIVE	R	P	DAL
RER55F3R74&	3.74	30	F	NONINDUCTIVE	R	P	DAL
RER55F3R83&	3.83	30	F	NONINDUCTIVE	R	P	DAL
RER55F3R92&	3.92	30	F	NONINDUCTIVE	R	P	DAL
RER55F4R02&	4.02	30	F	NONINDUCTIVE	R	P	DAL
RER55F4R12&	4.12	30	F	NONINDUCTIVE	R	P	DAL
RER55F4R22&	4.22	30	F	NONINDUCTIVE	R	P	DAL
RER55F4R32&	4.32	30	F	NONINDUCTIVE	R	P	DAL
RER55F4R42&	4.42	30	F	NONINDUCTIVE	R	P	DAL
RER55F4R53&	4.53	30	F	NONINDUCTIVE	R	P	DAL
RER55F4R64&	4.64	30	F	NONINDUCTIVE	R	P	DAL
RER55F4R75&	4.75	30	F	NONINDUCTIVE	R	P	DAL
RER55F4R87&	4.87	30	F	NONINDUCTIVE	R	P	DAL
RER55F4R99&	4.99	30	F	NONINDUCTIVE	R	P	DAL
RER55F5R11&	5.11	30	F	NONINDUCTIVE	R	P	DAL
RER55F5R23&	5.23	30	F	NONINDUCTIVE	R	P	DAL
RER55F5R36&	5.36	30	F	NONINDUCTIVE	R	P	DAL
RER55F5R49&	5.49	30	F	NONINDUCTIVE	R	P	DAL
RER55F5R62&	5.62	30	F	NONINDUCTIVE	R	P	DAL
RER55F5R76&	5.76	30	F	NONINDUCTIVE	R	P	DAL
RER55F5R90&	5.90	30	F	NONINDUCTIVE	R	P	DAL

RER55F6R04&	6.04	30	F	NONINDUCTIVE	R	P	DAL
RER55F6R19&	6.19	30	F	NONINDUCTIVE	R	P	DAL
RER55F6R34&	6.34	30	F	NONINDUCTIVE	R	P	DAL
RER55F6R49&	6.49	30	F	NONINDUCTIVE	R	P	DAL
RER55F6R65&	6.65	30	F	NONINDUCTIVE	R	P	DAL
RER55F6R81&	6.81	30	F	NONINDUCTIVE	R	P	DAL
RER55F6R98&	6.98	30	F	NONINDUCTIVE	R	P	DAL
RER55F7R15&	7.15	30	F	NONINDUCTIVE	R	P	DAL
RER55F7R32&	7.32	30	F	NONINDUCTIVE	R	P	DAL
RER55F7R50&	7.50	30	F	NONINDUCTIVE	R	P	DAL
RER55F7R68&	7.68	30	F	NONINDUCTIVE	R	P	DAL
RER55F7R87&	7.87	30	F	NONINDUCTIVE	R	P	DAL
RER55F8R06&	8.06	30	F	NONINDUCTIVE	R	P	DAL
RER55F8R25&	8.25	30	F	NONINDUCTIVE	R	P	DAL
RER55F8R45&	8.45	30	F	NONINDUCTIVE	R	P	DAL
RER55F8R66&	8.66	30	F	NONINDUCTIVE	R	P	DAL
RER55F8R87&	8.87	30	F	NONINDUCTIVE	R	P	DAL
RER55F9R09&	9.09	30	F	NONINDUCTIVE	R	P	DAL
RER55F9R31&	9.31	30	F	NONINDUCTIVE	R	P	DAL
RER55F9R53&	9.53	30	F	NONINDUCTIVE	R	P	DAL
RER55F9R76&	9.76	30	F	NONINDUCTIVE	R	P	DAL
RER55F10R0&	10.0	30	F	NONINDUCTIVE	R	P	DAL
RER55F10R2&	10.2	30	F	NONINDUCTIVE	R	P	DAL
RER55F10R5&	10.5	30	F	NONINDUCTIVE	R	P	DAL
RER55F10R7&	10.7	30	F	NONINDUCTIVE	R	P	DAL
RER55F11R0&	11.0	30	F	NONINDUCTIVE	R	P	DAL
RER55F11R3&	11.3	30	F	NONINDUCTIVE	R	P	DAL
RER55F11R5&	11.5	30	F	NONINDUCTIVE	R	P	DAL
RER55F11R8&	11.8	30	F	NONINDUCTIVE	R	P	DAL
RER55F12R1&	12.1	30	F	NONINDUCTIVE	R	P	DAL
RER55F12R4&	12.4	30	F	NONINDUCTIVE	R	P	DAL
RER55F12R7&	12.7	30	F	NONINDUCTIVE	R	P	DAL
RER55F13R0&	13.0	30	F	NONINDUCTIVE	R	P	DAL
RER55F13R3&	13.3	30	F	NONINDUCTIVE	R	P	DAL
RER55F13R7&	13.7	30	F	NONINDUCTIVE	R	P	DAL
RER55F14R0&	14.0	30	F	NONINDUCTIVE	R	P	DAL
RER55F14R3&	14.3	30	F	NONINDUCTIVE	R	P	DAL
RER55F14R7&	14.7	30	F	NONINDUCTIVE	R	P	DAL
RER55F15R0&	15.0	30	F	NONINDUCTIVE	R	P	DAL
RER55F15R4&	15.4	30	F	NONINDUCTIVE	R	P	DAL
RER55F15R8&	15.8	30	F	NONINDUCTIVE	R	P	DAL
RER55F16R2&	16.2	30	F	NONINDUCTIVE	R	P	DAL
RER55F16R5&	16.5	30	F	NONINDUCTIVE	R	P	DAL
RER55F16R9&	16.9	30	F	NONINDUCTIVE	R	P	DAL
RER55F17R4&	17.4	30	F	NONINDUCTIVE	R	P	DAL
RER55F17R8&	17.8	30	F	NONINDUCTIVE	R	P	DAL
RER55F18R2&	18.2	30	F	NONINDUCTIVE	R	P	DAL

RER55F18R7&	18.7	30	F	NONINDUCTIVE	R	P	DAL
RER55F19R1&	19.1	30	F	NONINDUCTIVE	R	P	DAL
RER55F19R6&	19.6	30	F	NONINDUCTIVE	R	P	DAL
RER55F20R0&	20.0	30	F	NONINDUCTIVE	R	P	DAL
RER55F20R5&	20.5	30	F	NONINDUCTIVE	R	P	DAL
RER55F21R0&	21.0	30	F	NONINDUCTIVE	R	P	DAL
RER55F21R5&	21.5	30	F	NONINDUCTIVE	R	P	DAL
RER55F22R1&	22.1	30	F	NONINDUCTIVE	R	P	DAL
RER55F22R6&	22.6	30	F	NONINDUCTIVE	R	P	DAL
RER55F23R2&	23.2	30	F	NONINDUCTIVE	R	P	DAL
RER55F23R7&	23.7	30	F	NONINDUCTIVE	R	P	DAL
RER55F24R3&	24.3	30	F	NONINDUCTIVE	R	P	DAL
RER55F24R9&	24.9	30	F	NONINDUCTIVE	R	P	DAL
RER55F25R5&	25.5	30	F	NONINDUCTIVE	R	P	DAL
RER55F26R1&	26.1	30	F	NONINDUCTIVE	R	P	DAL
RER55F26R7&	26.7	30	F	NONINDUCTIVE	R	P	DAL
RER55F27R4&	27.4	30	F	NONINDUCTIVE	R	P	DAL
RER55F28R0&	28.0	30	F	NONINDUCTIVE	R	P	DAL
RER55F28R7&	28.7	30	F	NONINDUCTIVE	R	P	DAL
RER55F29R4&	29.4	30	F	NONINDUCTIVE	R	P	DAL
RER55F30R1&	30.1	30	F	NONINDUCTIVE	R	P	DAL
RER55F30R9&	30.9	30	F	NONINDUCTIVE	R	P	DAL
RER55F31R6&	31.6	30	F	NONINDUCTIVE	R	P	DAL
RER55F32R4&	32.4	30	F	NONINDUCTIVE	R	P	DAL
RER55F33R2&	33.2	30	F	NONINDUCTIVE	R	P	DAL
RER55F34R0&	34.0	30	F	NONINDUCTIVE	R	P	DAL
RER55F34R8&	34.8	30	F	NONINDUCTIVE	R	P	DAL
RER55F35R7&	35.7	30	F	NONINDUCTIVE	R	P	DAL
RER55F36R5&	36.5	30	F	NONINDUCTIVE	R	P	DAL
RER55F37R4&	37.4	30	F	NONINDUCTIVE	R	P	DAL
RER55F38R3&	38.3	30	F	NONINDUCTIVE	R	P	DAL
RER55F39R2&	39.2	30	F	NONINDUCTIVE	R	P	DAL
RER55F40R2&	40.2	30	F	NONINDUCTIVE	R	P	DAL
RER55F41R2&	41.2	30	F	NONINDUCTIVE	R	P	DAL
RER55F42R2&	42.2	30	F	NONINDUCTIVE	R	P	DAL
RER55F43R2&	43.2	30	F	NONINDUCTIVE	R	P	DAL
RER55F44R2&	44.2	30	F	NONINDUCTIVE	R	P	DAL
RER55F45R3&	45.3	30	F	NONINDUCTIVE	R	P	DAL
RER55F46R4&	46.4	30	F	NONINDUCTIVE	R	P	DAL
RER55F47R5&	47.5	30	F	NONINDUCTIVE	R	P	DAL
RER55F48R7&	48.7	30	F	NONINDUCTIVE	R	P	DAL
RER55F49R9&	49.9	30	F	NONINDUCTIVE	R	P	DAL
RER55F51R1&	51.1	30	F	NONINDUCTIVE	R	P	DAL
RER55F52R3&	52.3	30	F	NONINDUCTIVE	R	P	DAL
RER55F53R6&	53.6	30	F	NONINDUCTIVE	R	P	DAL
RER55F54R9&	54.9	30	F	NONINDUCTIVE	R	P	DAL
RER55F56R2&	56.2	30	F	NONINDUCTIVE	R	P	DAL

RER55F57R6&	57.6	30	F	NONINDUCTIVE	R	P	DAL
RER55F59R0&	59.0	30	F	NONINDUCTIVE	R	P	DAL
RER55F60R4&	60.4	30	F	NONINDUCTIVE	R	P	DAL
RER55F61R9&	61.9	30	F	NONINDUCTIVE	R	P	DAL
RER55F63R4&	63.4	30	F	NONINDUCTIVE	R	P	DAL
RER55F64R9&	64.9	30	F	NONINDUCTIVE	R	P	DAL
RER55F66R5&	66.5	30	F	NONINDUCTIVE	R	P	DAL
RER55F68R1&	68.1	30	F	NONINDUCTIVE	R	P	DAL
RER55F69R8&	69.8	30	F	NONINDUCTIVE	R	P	DAL
RER55F71R5&	71.5	30	F	NONINDUCTIVE	R	P	DAL
RER55F73R2&	73.2	30	F	NONINDUCTIVE	R	P	DAL
RER55F75R0&	75.0	30	F	NONINDUCTIVE	R	P	DAL
RER55F76R8&	76.8	30	F	NONINDUCTIVE	R	P	DAL
RER55F78R7&	78.7	30	F	NONINDUCTIVE	R	P	DAL
RER55F80R6&	80.6	30	F	NONINDUCTIVE	R	P	DAL
RER55F82R5&	82.5	30	F	NONINDUCTIVE	R	P	DAL
RER55F84R5&	84.5	30	F	NONINDUCTIVE	R	P	DAL
RER55F86R6&	86.6	30	F	NONINDUCTIVE	R	P	DAL
RER55F88R7&	88.7	30	F	NONINDUCTIVE	R	P	DAL
RER55F90R9&	90.9	30	F	NONINDUCTIVE	R	P	DAL
RER55F93R1&	93.1	30	F	NONINDUCTIVE	R	P	DAL
RER55F95R3&	95.3	30	F	NONINDUCTIVE	R	P	DAL
RER55F97R6&	97.6	30	F	NONINDUCTIVE	R	P	DAL
RER55F100R&	100	30	F	NONINDUCTIVE	R	P	DAL
RER55F102R&	102	30	F	NONINDUCTIVE	R	P	DAL
RER55F105R&	105	30	F	NONINDUCTIVE	R	P	DAL
RER55F107R&	107	30	F	NONINDUCTIVE	R	P	DAL
RER55F110R&	110	30	F	NONINDUCTIVE	R	P	DAL
RER55F113R&	113	30	F	NONINDUCTIVE	R	P	DAL
RER55F115R&	115	30	F	NONINDUCTIVE	R	P	DAL
RER55F118R&	118	30	F	NONINDUCTIVE	R	P	DAL
RER55F121R&	121	30	F	NONINDUCTIVE	R	P	DAL
RER55F124R&	124	30	F	NONINDUCTIVE	R	P	DAL
RER55F127R&	127	30	F	NONINDUCTIVE	R	P	DAL
RER55F130R&	130	30	F	NONINDUCTIVE	R	P	DAL
RER55F133R&	133	30	F	NONINDUCTIVE	R	P	DAL
RER55F137R&	137	30	F	NONINDUCTIVE	R	P	DAL
RER55F140R&	140	30	F	NONINDUCTIVE	R	P	DAL
RER55F143R&	143	30	F	NONINDUCTIVE	R	P	DAL
RER55F147R&	147	30	F	NONINDUCTIVE	R	P	DAL
RER55F150R&	150	30	F	NONINDUCTIVE	R	P	DAL
RER55F154R&	154	30	F	NONINDUCTIVE	R	P	DAL
RER55F158R&	158	30	F	NONINDUCTIVE	R	P	DAL
RER55F162R&	162	30	F	NONINDUCTIVE	R	P	DAL
RER55F165R&	165	30	F	NONINDUCTIVE	R	P	DAL
RER55F169R&	169	30	F	NONINDUCTIVE	R	P	DAL
RER55F174R&	174	30	F	NONINDUCTIVE	R	P	DAL

RER55F178R&	178	30	F	NONINDUCTIVE	R	P	DAL
RER55F182R&	182	30	F	NONINDUCTIVE	R	P	DAL
RER55F187R&	187	30	F	NONINDUCTIVE	R	P	DAL
RER55F191R&	191	30	F	NONINDUCTIVE	R	P	DAL
RER55F196R&	196	30	F	NONINDUCTIVE	R	P	DAL
RER55F200R&	200	30	F	NONINDUCTIVE	R	P	DAL
RER55F205R&	205	30	F	NONINDUCTIVE	R	P	DAL
RER55F210R&	210	30	F	NONINDUCTIVE	R	P	DAL
RER55F215R&	215	30	F	NONINDUCTIVE	R	P	DAL
RER55F221R&	221	30	F	NONINDUCTIVE	R	P	DAL
RER55F226R&	226	30	F	NONINDUCTIVE	R	P	DAL
RER55F232R&	232	30	F	NONINDUCTIVE	R	P	DAL
RER55F237R&	237	30	F	NONINDUCTIVE	R	P	DAL
RER55F243R&	243	30	F	NONINDUCTIVE	R	P	DAL
RER55F249R&	249	30	F	NONINDUCTIVE	R	P	DAL
RER55F255R&	255	30	F	NONINDUCTIVE	R	P	DAL
RER55F261R&	261	30	F	NONINDUCTIVE	R	P	DAL
RER55F267R&	267	30	F	NONINDUCTIVE	R	P	DAL
RER55F274R&	274	30	F	NONINDUCTIVE	R	P	DAL
RER55F280R&	280	30	F	NONINDUCTIVE	R	P	DAL
RER55F287R&	287	30	F	NONINDUCTIVE	R	P	DAL
RER55F294R&	294	30	F	NONINDUCTIVE	R	P	DAL
RER55F301R&	301	30	F	NONINDUCTIVE	R	P	DAL
RER55F309R&	309	30	F	NONINDUCTIVE	R	P	DAL
RER55F316R&	316	30	F	NONINDUCTIVE	R	P	DAL
RER55F324R&	324	30	F	NONINDUCTIVE	R	P	DAL
RER55F332R&	332	30	F	NONINDUCTIVE	R	P	DAL
RER55F340R&	340	30	F	NONINDUCTIVE	R	P	DAL
RER55F348R&	348	30	F	NONINDUCTIVE	R	P	DAL
RER55F357R&	357	30	F	NONINDUCTIVE	R	P	DAL
RER55F365R&	365	30	F	NONINDUCTIVE	R	P	DAL
RER55F374R&	374	30	F	NONINDUCTIVE	R	P	DAL
RER55F383R&	383	30	F	NONINDUCTIVE	R	P	DAL
RER55F392R&	392	30	F	NONINDUCTIVE	R	P	DAL
RER55F402R&	402	30	F	NONINDUCTIVE	R	P	DAL
RER55F412R&	412	30	F	NONINDUCTIVE	R	P	DAL
RER55F422R&	422	30	F	NONINDUCTIVE	R	P	DAL
RER55F432R&	432	30	F	NONINDUCTIVE	R	P	DAL
RER55F442R&	442	30	F	NONINDUCTIVE	R	P	DAL
RER55F453R&	453	30	F	NONINDUCTIVE	R	P	DAL
RER55F464R&	464	30	F	NONINDUCTIVE	R	P	DAL
RER55F475R&	475	30	F	NONINDUCTIVE	R	P	DAL
RER55F487R&	487	30	F	NONINDUCTIVE	R	P	DAL
RER55F499R&	499	30	F	NONINDUCTIVE	R	P	DAL
RER55F511R&	511	30	F	NONINDUCTIVE	R	P	DAL
RER55F523R&	523	30	F	NONINDUCTIVE	R	P	DAL
RER55F536R&	536	30	F	NONINDUCTIVE	R	P	DAL

RER55F549R&	549	30	F	NONINDUCTIVE	R	P	DAL
RER55F562R&	562	30	F	NONINDUCTIVE	R	P	DAL
RER55F576R&	576	30	F	NONINDUCTIVE	R	P	DAL
RER55F590R&	590	30	F	NONINDUCTIVE	R	P	DAL
RER55F604R&	604	30	F	NONINDUCTIVE	R	P	DAL
RER55F619R&	619	30	F	NONINDUCTIVE	R	P	DAL
RER55F634R&	634	30	F	NONINDUCTIVE	R	P	DAL
RER55F649R&	649	30	F	NONINDUCTIVE	R	P	DAL
RER55F665R&	665	30	F	NONINDUCTIVE	R	P	DAL
RER55F681R&	681	30	F	NONINDUCTIVE	R	P	DAL
RER55F698R&	698	30	F	NONINDUCTIVE	R	P	DAL
RER55F715R&	715	30	F	NONINDUCTIVE	R	P	DAL
RER55F732R&	732	30	F	NONINDUCTIVE	R	P	DAL
RER55F750R&	750	30	F	NONINDUCTIVE	R	P	DAL
RER55F768R&	768	30	F	NONINDUCTIVE	R	P	DAL
RER55F787R&	787	30	F	NONINDUCTIVE	R	P	DAL
RER55F806R&	806	30	F	NONINDUCTIVE	R	P	DAL
RER55F825R&	825	30	F	NONINDUCTIVE	R	P	DAL
RER55F845R&	845	30	F	NONINDUCTIVE	R	P	DAL
RER55F866R&	866	30	F	NONINDUCTIVE	R	P	DAL
RER55F887R&	887	30	F	NONINDUCTIVE	R	P	DAL
RER55F909R&	909	30	F	NONINDUCTIVE	R	P	DAL
RER55F931R&	931	30	F	NONINDUCTIVE	R	P	DAL
RER55F953R&	953	30	F	NONINDUCTIVE	R	P	DAL
RER55F976R&	976	30	F	NONINDUCTIVE	R	P	DAL
RER55F1001&	1,000	30	F	NONINDUCTIVE	R	P	DAL
RER55F1021&	1,020	30	F	NONINDUCTIVE	R	P	DAL
RER55F1051&	1,050	30	F	NONINDUCTIVE	R	P	DAL
RER55F1071&	1,070	30	F	NONINDUCTIVE	R	P	DAL
RER55F1101&	1,100	30	F	NONINDUCTIVE	R	P	DAL
RER55F1131&	1,130	30	F	NONINDUCTIVE	R	P	DAL
RER55F1151&	1,150	30	F	NONINDUCTIVE	R	P	DAL
RER55F1181&	1,180	30	F	NONINDUCTIVE	R	P	DAL
RER55F1211&	1,210	30	F	NONINDUCTIVE	R	P	DAL
RER55F1241&	1,240	30	F	NONINDUCTIVE	R	P	DAL
RER55F1271&	1,270	30	F	NONINDUCTIVE	R	P	DAL
RER55F1301&	1,300	30	F	NONINDUCTIVE	R	P	DAL
RER55F1331&	1,330	30	F	NONINDUCTIVE	R	P	DAL
RER55F1371&	1,370	30	F	NONINDUCTIVE	R	P	DAL
RER55F1401&	1,400	30	F	NONINDUCTIVE	R	P	DAL
RER55F1431&	1,430	30	F	NONINDUCTIVE	R	P	DAL
RER55F1471&	1,470	30	F	NONINDUCTIVE	R	P	DAL
RER55F1501&	1,500	30	F	NONINDUCTIVE	R	P	DAL
RER55F1541&	1,540	30	F	NONINDUCTIVE	R	P	DAL
RER55F1581&	1,580	30	F	NONINDUCTIVE	R	P	DAL
RER55F1621&	1,620	30	F	NONINDUCTIVE	R	P	DAL
RER55F1651&	1,650	30	F	NONINDUCTIVE	R	P	DAL

RER55F1691&	1,690	30	F	NONINDUCTIVE	R	P	DAL
RER55F1741&	1,740	30	F	NONINDUCTIVE	R	P	DAL
RER55F1781&	1,780	30	F	NONINDUCTIVE	R	P	DAL
RER55F1821&	1,820	30	F	NONINDUCTIVE	R	P	DAL
RER55F1871&	1,870	30	F	NONINDUCTIVE	R	P	DAL
RER55F1911&	1,910	30	F	NONINDUCTIVE	R	P	DAL
RER55F1961&	1,960	30	F	NONINDUCTIVE	R	P	DAL
RER55F2001&	2,000	30	F	NONINDUCTIVE	R	P	DAL
RER55F2051&	2,050	30	F	NONINDUCTIVE	R	P	DAL
RER55F2101&	2,100	30	F	NONINDUCTIVE	R	P	DAL
RER55F2151&	2,150	30	F	NONINDUCTIVE	R	P	DAL
RER55F2211&	2,210	30	F	NONINDUCTIVE	R	P	DAL
RER55F2261&	2,260	30	F	NONINDUCTIVE	R	P	DAL
RER55F2321&	2,320	30	F	NONINDUCTIVE	R	P	DAL
RER55F2371&	2,370	30	F	NONINDUCTIVE	R	P	DAL
RER55F2431&	2,430	30	F	NONINDUCTIVE	R	P	DAL
RER55F2491&	2,490	30	F	NONINDUCTIVE	R	P	DAL
RER55F2551&	2,550	30	F	NONINDUCTIVE	R	P	DAL
RER55F2611&	2,610	30	F	NONINDUCTIVE	R	P	DAL
RER55F2671&	2,670	30	F	NONINDUCTIVE	R	P	DAL
RER55F2741&	2,740	30	F	NONINDUCTIVE	R	P	DAL
RER55F2801&	2,800	30	F	NONINDUCTIVE	R	P	DAL
RER55F2871&	2,870	30	F	NONINDUCTIVE	R	P	DAL
RER55F2941&	2,940	30	F	NONINDUCTIVE	R	P	DAL
RER55F3011&	3,010	30	F	NONINDUCTIVE	R	P	DAL
RER55F3091&	3,090	30	F	NONINDUCTIVE	R	P	DAL
RER55F3161&	3,160	30	F	NONINDUCTIVE	R	P	DAL
RER55F3241&	3,240	30	F	NONINDUCTIVE	R	P	DAL
RER55F3321&	3,320	30	F	NONINDUCTIVE	R	P	DAL
RER55F3401&	3,400	30	F	NONINDUCTIVE	R	P	DAL
RER55F3481&	3,480	30	F	NONINDUCTIVE	R	P	DAL
RER55F3571&	3,570	30	F	NONINDUCTIVE	R	P	DAL
RER55F3651&	3,650	30	F	NONINDUCTIVE	R	P	DAL
RER55F3741&	3,740	30	F	NONINDUCTIVE	R	P	DAL
RER55F3831&	3,830	30	F	NONINDUCTIVE	R	P	DAL
RER55F3921&	3,920	30	F	NONINDUCTIVE	R	P	DAL
RER55F4021&	4,020	30	F	NONINDUCTIVE	R	P	DAL
RER55F4121&	4,120	30	F	NONINDUCTIVE	R	P	DAL
RER55F4221&	4,220	30	F	NONINDUCTIVE	R	P	DAL
RER55F4321&	4,320	30	F	NONINDUCTIVE	R	P	DAL
RER55F4421&	4,420	30	F	NONINDUCTIVE	R	P	DAL
RER55F4531&	4,530	30	F	NONINDUCTIVE	R	P	DAL
RER55F4641&	4,640	30	F	NONINDUCTIVE	R	P	DAL
RER55F4751&	4,750	30	F	NONINDUCTIVE	R	P	DAL
RER55F4871&	4,870	30	F	NONINDUCTIVE	R	P	DAL
RER55F4991&	4,990	30	F	NONINDUCTIVE	R	P	DAL
RER55F5111&	5,110	30	F	NONINDUCTIVE	R	P	-

RER55F5231&	5,230	30	F	NONINDUCTIVE	R	P	-
RER55F5361&	5,360	30	F	NONINDUCTIVE	R	P	-
RER55F5491&	5,490	30	F	NONINDUCTIVE	R	P	-
RER55F5621&	5,620	30	F	NONINDUCTIVE	R	P	-
RER55F5761&	5,760	30	F	NONINDUCTIVE	R	P	-
RER55F5901&	5,900	30	F	NONINDUCTIVE	R	P	-
RER55F6041&	6,040	30	F	NONINDUCTIVE	R	P	-
RER55F6191&	6,190	30	F	NONINDUCTIVE	R	P	-
RER55F6341&	6,340	30	F	NONINDUCTIVE	R	P	-
RER55F6491&	6,490	30	F	NONINDUCTIVE	R	P	-
RER55F6651&	6,650	30	F	NONINDUCTIVE	R	P	-
RER55F6811&	6,810	30	F	NONINDUCTIVE	R	P	-
RER55F6981&	6,980	30	F	NONINDUCTIVE	R	P	-
RER55F7151&	7,150	30	F	NONINDUCTIVE	R	P	-
RER55F7321&	7,320	30	F	NONINDUCTIVE	R	P	-
RER55F7501&	7,500	30	F	NONINDUCTIVE	R	P	-
RER55F7681&	7,680	30	F	NONINDUCTIVE	R	P	-
RER55F7871&	7,870	30	F	NONINDUCTIVE	R	P	-
RER55F8061&	8,060	30	F	NONINDUCTIVE	R	P	-
RER55F8251&	8,250	30	F	NONINDUCTIVE	R	P	-
RER55F8451&	8,450	30	F	NONINDUCTIVE	R	P	-
RER55F8661&	8,660	30	F	NONINDUCTIVE	R	P	-
RER55F8871&	8,860	30	F	NONINDUCTIVE	R	P	-
RER55F9091&	9,090	30	F	NONINDUCTIVE	R	P	-
RER55F9311&	9,310	30	F	NONINDUCTIVE	R	P	-
RER55F9531&	9,530	30	F	NONINDUCTIVE	R	P	-
RER55F9761&	9,760	30	F	NONINDUCTIVE	R	P	-
RER55F1002&	10,000	30	F	NONINDUCTIVE	R	P	-
RER55F1022&	10,200	30	F	NONINDUCTIVE	R	P	-
RER55F1052&	10,500	30	F	NONINDUCTIVE	R	P	-
RER55F1072&	10,700	30	F	NONINDUCTIVE	R	P	-
RER55F1102&	11,000	30	F	NONINDUCTIVE	R	P	-
RER55F1132&	11,300	30	F	NONINDUCTIVE	R	P	-
RER55F1152&	11,500	30	F	NONINDUCTIVE	R	P	-
RER55F1182&	11,800	30	F	NONINDUCTIVE	R	P	-
RER55F1212&	12,100	30	F	NONINDUCTIVE	R	P	-
RER55F1242&	12,400	30	F	NONINDUCTIVE	R	P	-
RER55F1272&	12,700	30	F	NONINDUCTIVE	R	P	-
RER55F1302&	13,000	30	F	NONINDUCTIVE	R	P	-
RER55F1332&	13,300	30	F	NONINDUCTIVE	R	P	-
RER55F1372&	13,700	30	F	NONINDUCTIVE	R	P	-
RER55F1402&	14,000	30	F	NONINDUCTIVE	R	P	-
RER55F1432&	14,300	30	F	NONINDUCTIVE	R	P	-
RER55F1472&	14,700	30	F	NONINDUCTIVE	R	P	-
RER55F1502&	15,000	30	F	NONINDUCTIVE	R	P	-
RER55F1542&	15,400	30	F	NONINDUCTIVE	R	P	-
RER55F1582&	15,800	30	F	NONINDUCTIVE	R	P	-

RER55F1622&	16,200	30	F	NONINDUCTIVE	R	P	-
RER55F1652&	16,500	30	F	NONINDUCTIVE	R	P	-
RER55F1692&	16,900	30	F	NONINDUCTIVE	R	P	-
RER55F1742&	17,400	30	F	NONINDUCTIVE	R	P	-
RER55F1782&	17,800	30	F	NONINDUCTIVE	R	P	-
RER55F1822&	18,200	30	F	NONINDUCTIVE	R	P	-
RER55F1872&	18,700	30	F	NONINDUCTIVE	R	P	-
RER55F1912&	19,100	30	F	NONINDUCTIVE	R	P	-
RER55F1962&	19,600	30	F	NONINDUCTIVE	R	P	-

RER55 RESISTORS DECADE BREAKDOWN

Click on the link below to see the associated parts selection listing:

Resistance Range
1.00 Ohms through 9.76 Ohms
10.0 Ohms through 97.6 Ohms
100 Ohms through 976 Ohms
1000 Ohms through 9760 Ohms

RER55 Wirewound Resistors: 1.00 Ohms through 9.76 Ohms

	Resistance	Power	Resistance		Level 1	Level 2	
Part Number	Value (Ohms)	Rating (W)	Tolerance	Winding	(FRL)(&)	(FRL)(&)	Manufacturer
RER55F1R00&	1.00	30	F	NONINDUCTIVE	R	P	DAL
RER55F1R02&	1.02	30	F	NONINDUCTIVE	R	P	DAL
RER55F1R05&	1.05	30	F	NONINDUCTIVE	R	P	DAL
RER55F1R07&	1.07	30	F	NONINDUCTIVE	R	P	DAL
RER55F1R10&	1.10	30	F	NONINDUCTIVE	R	P	DAL
RER55F1R13&	1.13	30	F	NONINDUCTIVE	R	P	DAL
RER55F1R15&	1.15	30	F	NONINDUCTIVE	R	P	DAL
RER55F1R18&	1.18	30	F	NONINDUCTIVE	R	P	DAL
RER55F1R21&	1.21	30	F	NONINDUCTIVE	R	P	DAL
RER55F1R24&	1.24	30	F	NONINDUCTIVE	R	P	DAL
RER55F1R27&	1.27	30	F	NONINDUCTIVE	R	P	DAL
RER55F1R30&	1.30	30	F	NONINDUCTIVE	R	P	DAL
RER55F1R33&	1.33	30	F	NONINDUCTIVE	R	P	DAL
RER55F1R37&	1.37	30	F	NONINDUCTIVE	R	P	DAL
	Resistance	Power	Resistance		Level 1	Level 2	
Part Number	Value (Ohms)	Rating (W)	Tolerance	Winding	(FRL)(&)	(FRL)(&)	Manufacturer
RER55F1R40&	1.40	30	F	NONINDUCTIVE	R	P	DAL
RER55F1R43&	1.43	30	F	NONINDUCTIVE	R	P	DAL
RER55F1R47&	1.47	30	F	NONINDUCTIVE	R	P	DAL
RER55F1R50&	1.50	30	F	NONINDUCTIVE	R	P	DAL
RER55F1R54&	1.54	30	F	NONINDUCTIVE	R	P	DAL

RER55F1R58&	1.58	30	F	NONINDUCTIVE	R	P	DAL
RER55F1R62&	1.62	30	F	NONINDUCTIVE	R	P	DAL
RER55F1R65&	1.65	30	F	NONINDUCTIVE	R	P	DAL
RER55F1R69&	1.69	30	F	NONINDUCTIVE	R	P	DAL
RER55F1R74&	1.74	30	F	NONINDUCTIVE	R	P	DAL
RER55F1R78&	1.78	30	F	NONINDUCTIVE	R	P	DAL
RER55F1R82&	1.82	30	F	NONINDUCTIVE	R	P	DAL
RER55F1R87&	1.87	30	F	NONINDUCTIVE	R	P	DAL
	Resistance	Power	Resistance		Level 1	Level 2	
Part Number	Value (Ohms)	Rating (W)	Tolerance	Winding	(FRL)(&)	(FRL)(&)	Manufacturer
RER55F1R91&	1.91	30	F	NONINDUCTIVE	R	P	DAL
RER55F1R96&	1.96	30	F	NONINDUCTIVE	R	P	DAL
RER55F2R00&	2.00	30	F	NONINDUCTIVE	R	P	DAL
RER55F2R05&	2.05	30	F	NONINDUCTIVE	R	P	DAL
RER55F2R10&	2.10	30	F	NONINDUCTIVE	R	P	DAL
RER55F2R15&	2.15	30	F	NONINDUCTIVE	R	P	DAL
RER55F2R21&	2.21	30	F	NONINDUCTIVE	R	P	DAL
RER55F2R26&	2.26	30	F	NONINDUCTIVE	R	P	DAL
RER55F2R32&	2.32	30	F	NONINDUCTIVE	R	P	DAL
RER55F2R37&	2.37	30	F	NONINDUCTIVE	R	P	DAL
RER55F2R43&	2.43	30	F	NONINDUCTIVE	R	P	DAL
RER55F2R49&	2.49	30	F	NONINDUCTIVE	R	P	DAL
RER55F2R55&	2.55	30	F	NONINDUCTIVE	R	P	DAL
RER55F2R61&	2.61	30	F	NONINDUCTIVE	R	P	DAL
	Resistance	Power	Resistance		Level 1	Level 2	
Part Number	Value (Ohms)	Rating (W)	Tolerance	Winding	(FRL)(&)	(FRL)(&)	Manufacturer
RER55F2R67&	2.67	30	F	NONINDUCTIVE	R	P	DAL
RER55F2R74&	2.74	30	F	NONINDUCTIVE	R	P	DAL
RER55F2R80&	2.80	30	F	NONINDUCTIVE	R	P	DAL
RER55F2R87&	2.87	30	F	NONINDUCTIVE	R	P	DAL
RER55F2R94&	2.94	30	F	NONINDUCTIVE	R	P	DAL
RER55F3R01&	3.01	30	F	NONINDUCTIVE	R	P	DAL
RER55F3R09&	3.09	30	F	NONINDUCTIVE	R	P	DAL
RER55F3R16&	3.16	30	F	NONINDUCTIVE	R	P	DAL
RER55F3R24&	3.24	30	F	NONINDUCTIVE	R	P	DAL
RER55F3R32&	3.32	30	F	NONINDUCTIVE	R	P	DAL
RER55F3R40&	3.40	30	F	NONINDUCTIVE	R	P	DAL
RER55F3R48&	3.48	30	F	NONINDUCTIVE	R	P	DAL
RER55F3R57&	3.57	30	F	NONINDUCTIVE	R	P	DAL
	Resistance	Power	Resistance		Level 1	Level 2	
Part Number	Value (Ohms)	Rating (W)	Tolerance	Winding	(FRL)(&)	(FRL)(&)	Manufacturer
RER55F3R65&	3.65	30	F	NONINDUCTIVE	R	P	DAL
RER55F3R74&	3.74	30	F	NONINDUCTIVE	R	P	DAL
RER55F3R83&	3.83	30	F	NONINDUCTIVE	R	P	DAL
RER55F3R92&	3.92	30	F	NONINDUCTIVE	R	P	DAL
RER55F4R02&	4.02	30	F	NONINDUCTIVE	R	P	DAL
RER55F4R12&	4.12	30	F	NONINDUCTIVE	R	P	DAL

RER55F4R22&	4.22	30	F	NONINDUCTIVE	R	P	DAL
RER55F4R32&	4.32	30	F	NONINDUCTIVE	R	P	DAL
RER55F4R42&	4.42	30	F	NONINDUCTIVE	R	P	DAL
RER55F4R53&	4.53	30	F	NONINDUCTIVE	R	P	DAL
RER55F4R64&	4.64	30	F	NONINDUCTIVE	R	P	DAL
RER55F4R75&	4.75	30	F	NONINDUCTIVE	R	P	DAL
RER55F4R87&	4.87	30	F	NONINDUCTIVE	R	P	DAL
RER55F4R99&	4.99	30	F	NONINDUCTIVE	R	P	DAL
	Resistance	Power	Resistance		Level 1	Level 2	
Part Number	Value (Ohms)	Rating (W)	Tolerance	Winding	(FRL)(&)	(FRL)(&)	Manufacturer
RER55F5R11&	5.11	30	F	NONINDUCTIVE	R	P	DAL
RER55F5R23&	5.23	30	F	NONINDUCTIVE	R	P	DAL
RER55F5R36&	5.36	30	F	NONINDUCTIVE	R	P	DAL
RER55F5R49&	5.49	30	F	NONINDUCTIVE	R	P	DAL
RER55F5R62&	5.62	30	F	NONINDUCTIVE	R	P	DAL
RER55F5R76&	5.76	30	F	NONINDUCTIVE	R	P	DAL
RER55F5R90&	5.90	30	F	NONINDUCTIVE	R	P	DAL
RER55F6R04&	6.04	30	F	NONINDUCTIVE	R	P	DAL
RER55F6R19&	6.19	30	F	NONINDUCTIVE	R	P	DAL
RER55F6R34&	6.34	30	F	NONINDUCTIVE	R	P	DAL
RER55F6R49&	6.49	30	F	NONINDUCTIVE	R	P	DAL
RER55F6R65&	6.65	30	F	NONINDUCTIVE	R	P	DAL
RER55F6R81&	6.81	30	F	NONINDUCTIVE	R	P	DAL
	Resistance	Power	Resistance		Level 1	Level 2	
Part Number	Value (Ohms)	Rating (W)	Tolerance	Winding	(FRL)(&)	(FRL)(&)	Manufacturer
RER55F6R98&	6.98	30	F	NONINDUCTIVE	R	P	DAL
RER55F7R15&	7.15	30	F	NONINDUCTIVE	R	P	DAL
RER55F7R32&	7.32	30	F	NONINDUCTIVE	R	P	DAL
RER55F7R50&	7.50	30	F	NONINDUCTIVE	R	P	DAL
RER55F7R68&	7.68	30	F	NONINDUCTIVE	R	P	DAL
RER55F7R87&	7.87	30	F	NONINDUCTIVE	R	P	DAL
RER55F8R06&	8.06	30	F	NONINDUCTIVE	R	P	DAL
RER55F8R25&	8.25	30	F	NONINDUCTIVE	R	P	DAL
RER55F8R45&	8.45	30	F	NONINDUCTIVE	R	P	DAL
RER55F8R66&	8.66	30	F	NONINDUCTIVE	R	P	DAL
RER55F8R87&	8.87	30	F	NONINDUCTIVE	R	P	DAL
RER55F9R09&	9.09	30	F	NONINDUCTIVE	R	P	DAL
RER55F9R31&	9.31	30	F	NONINDUCTIVE	R	P	DAL
RER55F9R53&	9.53	30	F	NONINDUCTIVE	R	P	DAL
RER55F9R76&	9.76	30	F	NONINDUCTIVE	R	P	DAL
	Resistance	Power	Resistance		Level 1	Level 2	
Part Number	Value (Ohms)	Rating (W)	Tolerance	Winding	(FRL)(&)	(FRL)(&)	Manufacturer

RER55 Wirewound Resistors: 10.0 Ohms through 97.6 Ohms

	Resistance	Power	Resistance		Level 1	Level 2	
Part Number	Value (Ohms)	Rating (W)	Tolerance	Winding	(FRL)(&)	(FRL)(&)	Manufacturer
RER55F10R0&	10.0	30	F	NONINDUCTIVE	R	P	DAL
RER55F10R2&	10.2	30	F	NONINDUCTIVE	R	P	DAL
RER55F10R5&	10.5	30	F	NONINDUCTIVE	R	P	DAL
RER55F10R7&	10.7	30	F	NONINDUCTIVE	R	P	DAL
RER55F11R0&	11.0	30	F	NONINDUCTIVE	R	P	DAL
RER55F11R3&	11.3	30	F	NONINDUCTIVE	R	P	DAL
RER55F11R5&	11.5	30	F	NONINDUCTIVE	R	P	DAL
RER55F11R8&	11.8	30	F	NONINDUCTIVE	R	P	DAL
RER55F12R1&	12.1	30	F	NONINDUCTIVE	R	P	DAL
RER55F12R4&	12.4	30	F	NONINDUCTIVE	R	P	DAL
RER55F12R7&	12.7	30	F	NONINDUCTIVE	R	P	DAL
RER55F13R0&	13.0	30	F	NONINDUCTIVE	R	P	DAL
RER55F13R3&	13.3	30	F	NONINDUCTIVE	R	P	DAL
RER55F13R7&	13.7	30	F	NONINDUCTIVE	R	P	DAL
	Resistance	Power	Resistance		Level 1	Level 2	
Part Number	Value (Ohms)	Rating (W)	Tolerance	Winding	(FRL)(&)	(FRL)(&)	Manufacturer
RER55F14R0&	14.0	30	F	NONINDUCTIVE	R	P	DAL
RER55F14R3&	14.3	30	F	NONINDUCTIVE	R	P	DAL
RER55F14R7&	14.7	30	F	NONINDUCTIVE	R	P	DAL
RER55F15R0&	15.0	30	F	NONINDUCTIVE	R	P	DAL
RER55F15R4&	15.4	30	F	NONINDUCTIVE	R	P	DAL
RER55F15R8&	15.8	30	F	NONINDUCTIVE	R	P	DAL
RER55F16R2&	16.2	30	F	NONINDUCTIVE	R	P	DAL
RER55F16R5&	16.5	30	F	NONINDUCTIVE	R	P	DAL
RER55F16R9&	16.9	30	F	NONINDUCTIVE	R	P	DAL
RER55F17R4&	17.4	30	F	NONINDUCTIVE	R	P	DAL
RER55F17R8&	17.8	30	F	NONINDUCTIVE	R	P	DAL
RER55F18R2&	18.2	30	F	NONINDUCTIVE	R	P	DAL
RER55F18R7&	18.7	30	F	NONINDUCTIVE	R	P	DAL
	Resistance	Power	Resistance		Level 1	Level 2	
Part Number	Value (Ohms)	Rating (W)	Tolerance	Winding	(FRL)(&)	(FRL)(&)	Manufacturer
RER55F19R1&	19.1	30	F	NONINDUCTIVE	R	P	DAL
RER55F19R6&	19.6	30	F	NONINDUCTIVE	R	P	DAL
RER55F20R0&	20.0	30	F	NONINDUCTIVE	R	P	DAL
RER55F20R5&	20.5	30	F	NONINDUCTIVE	R	P	DAL
RER55F21R0&	21.0	30	F	NONINDUCTIVE	R	P	DAL
RER55F21R5&	21.5	30	F	NONINDUCTIVE	R	P	DAL
RER55F22R1&	22.1	30	F	NONINDUCTIVE	R	P	DAL
RER55F22R6&	22.6	30	F	NONINDUCTIVE	R	P	DAL
RER55F23R2&	23.2	30	F	NONINDUCTIVE	R	P	DAL
RER55F23R7&	23.7	30	F	NONINDUCTIVE	R	P	DAL
RER55F24R3&	24.3	30	F	NONINDUCTIVE	R	P	DAL
RER55F24R9&	24.9	30	F	NONINDUCTIVE	R	P	DAL
RER55F25R5&	25.5	30	F	NONINDUCTIVE	R	P	DAL
RER55F26R1&	26.1	30	F	NONINDUCTIVE	R	P	DAL

	Resistance	Power	Resistance		Level 1	Level 2	
Part Number	Value (Ohms)	Rating (W)	Tolerance	Winding	(FRL)(&)	(FRL)(&)	Manufacturer
RER55F26R7&	26.7	30	F	NONINDUCTIVE	R	P	DAL
RER55F27R4&	27.4	30	F	NONINDUCTIVE	R	P	DAL
RER55F28R0&	28.0	30	F	NONINDUCTIVE	R	P	DAL
RER55F28R7&	28.7	30	F	NONINDUCTIVE	R	P	DAL
RER55F29R4&	29.4	30	F	NONINDUCTIVE	R	P	DAL
RER55F30R1&	30.1	30	F	NONINDUCTIVE	R	P	DAL
RER55F30R9&	30.9	30	F	NONINDUCTIVE	R	P	DAL
RER55F31R6&	31.6	30	F	NONINDUCTIVE	R	P	DAL
RER55F32R4&	32.4	30	F	NONINDUCTIVE	R	P	DAL
RER55F33R2&	33.2	30	F	NONINDUCTIVE	R	P	DAL
RER55F34R0&	34.0	30	F	NONINDUCTIVE	R	P	DAL
RER55F34R8&	34.8	30	F	NONINDUCTIVE	R	P	DAL
RER55F35R7&	35.7	30	F	NONINDUCTIVE	R	P	DAL
	Resistance	Power	Resistance		Level 1	Level 2	
Part Number	Value (Ohms)	Rating (W)	Tolerance	Winding	(FRL)(&)	(FRL)(&)	Manufacturer
RER55F36R5&	36.5	30	F	NONINDUCTIVE	R	P	DAL
RER55F37R4&	37.4	30	F	NONINDUCTIVE	R	P	DAL
RER55F38R3&	38.3	30	F	NONINDUCTIVE	R	P	DAL
RER55F39R2&	39.2	30	F	NONINDUCTIVE	R	P	DAL
RER55F40R2&	40.2	30	F	NONINDUCTIVE	R	P	DAL
RER55F41R2&	41.2	30	F	NONINDUCTIVE	R	P	DAL
RER55F42R2&	42.2	30	F	NONINDUCTIVE	R	P	DAL
RER55F43R2&	43.2	30	F	NONINDUCTIVE	R	P	DAL
RER55F44R2&	44.2	30	F	NONINDUCTIVE	R	P	DAL
RER55F45R3&	45.3	30	F	NONINDUCTIVE	R	P	DAL
RER55F46R4&	46.4	30	F	NONINDUCTIVE	R	P	DAL
RER55F47R5&	47.5	30	F	NONINDUCTIVE	R	P	DAL
RER55F48R7&	48.7	30	F	NONINDUCTIVE	R	P	DAL
RER55F49R9&	49.9	30	F	NONINDUCTIVE	R	P	DAL
	Resistance	Power	Resistance		Level 1	Level 2	
Part Number	Value (Ohms)	Rating (W)	Tolerance	Winding	(FRL)(&)	(FRL)(&)	Manufacturer
RER55F51R1&	51.1	30	F	NONINDUCTIVE	R	P	DAL
RER55F52R3&	52.3	30	F	NONINDUCTIVE	R	P	DAL
RER55F53R6&	53.6	30	F	NONINDUCTIVE	R	P	DAL
RER55F54R9&	54.9	30	F	NONINDUCTIVE	R	P	DAL
RER55F56R2&	56.2	30	F	NONINDUCTIVE	R	P	DAL
RER55F57R6&	57.6	30	F	NONINDUCTIVE	R	P	DAL
RER55F59R0&	59.0	30	F	NONINDUCTIVE	R	P	DAL
RER55F60R4&	60.4	30	F	NONINDUCTIVE	R	P	DAL
RER55F61R9&	61.9	30	F	NONINDUCTIVE	R	P	DAL
RER55F63R4&	63.4	30	F	NONINDUCTIVE	R	P	DAL
RER55F64R9&	64.9	30	F	NONINDUCTIVE	R	P	DAL
RER55F66R5&	66.5	30	F	NONINDUCTIVE	R	P	DAL
RER55F68R1&	68.1	30	F	NONINDUCTIVE	R	P	DAL
	Resistance	Power	Resistance		Level 1	Level 2	

Part Number	Value (Ohms)	Rating (W)	Tolerance	Winding	(FRL)(&)	(FRL)(&)	Manufacturer
RER55F69R8&	69.8	30	F	NONINDUCTIVE	R	P	DAL
RER55F71R5&	71.5	30	F	NONINDUCTIVE	R	P	DAL
RER55F73R2&	73.2	30	F	NONINDUCTIVE	R	P	DAL
RER55F75R0&	75.0	30	F	NONINDUCTIVE	R	P	DAL
RER55F76R8&	76.8	30	F	NONINDUCTIVE	R	P	DAL
RER55F78R7&	78.7	30	F	NONINDUCTIVE	R	P	DAL
RER55F80R6&	80.6	30	F	NONINDUCTIVE	R	P	DAL
RER55F82R5&	82.5	30	F	NONINDUCTIVE	R	P	DAL
RER55F84R5&	84.5	30	F	NONINDUCTIVE	R	P	DAL
RER55F86R6&	86.6	30	F	NONINDUCTIVE	R	P	DAL
RER55F88R7&	88.7	30	F	NONINDUCTIVE	R	P	DAL
RER55F90R9&	90.9	30	F	NONINDUCTIVE	R	P	DAL
RER55F93R1&	93.1	30	F	NONINDUCTIVE	R	P	DAL
RER55F95R3&	95.3	30	F	NONINDUCTIVE	R	P	DAL
RER55F97R6&	97.6	30	F	NONINDUCTIVE	R	P	DAL
	Resistance	Power	Resistance		Level 1	Level 2	
Part Number	Value (Ohms)	Rating (W)	Tolerance	Winding	(FRL)(&)	(FRL)(&)	Manufacturer

RER55 Wirewound Resistors: 100 Ohms through 976 Ohms

	Resistance	Power	Resistance		Level 1	Level 2	
Part Number	Value (Ohms)	Rating (W)	Tolerance	Winding	(FRL)(&)	(FRL)(&)	Manufacturer
RER55F100R&	100	30	F	NONINDUCTIVE	R	P	DAL
RER55F102R&	102	30	F	NONINDUCTIVE	R	P	DAL
RER55F105R&	105	30	F	NONINDUCTIVE	R	P	DAL
RER55F107R&	107	30	F	NONINDUCTIVE	R	P	DAL
RER55F110R&	110	30	F	NONINDUCTIVE	R	P	DAL
RER55F113R&	113	30	F	NONINDUCTIVE	R	P	DAL
RER55F115R&	115	30	F	NONINDUCTIVE	R	P	DAL
RER55F118R&	118	30	F	NONINDUCTIVE	R	P	DAL
RER55F121R&	121	30	F	NONINDUCTIVE	R	P	DAL
RER55F124R&	124	30	F	NONINDUCTIVE	R	P	DAL
RER55F127R&	127	30	F	NONINDUCTIVE	R	P	DAL
RER55F130R&	130	30	F	NONINDUCTIVE	R	P	DAL
RER55F133R&	133	30	F	NONINDUCTIVE	R	P	DAL
RER55F137R&	137	30	F	NONINDUCTIVE	R	P	DAL
	Resistance	Power	Resistance		Level 1	Level 2	
Part Number	Value (Ohms)	Rating (W)	Tolerance	Winding	(FRL)(&)	(FRL)(&)	Manufacturer
RER55F140R&	140	30	F	NONINDUCTIVE	R	P	DAL
RER55F143R&	143	30	F	NONINDUCTIVE	R	P	DAL
RER55F147R&	147	30	F	NONINDUCTIVE	R	P	DAL
RER55F150R&	150	30	F	NONINDUCTIVE	R	P	DAL
RER55F154R&	154	30	F	NONINDUCTIVE	R	P	DAL
RER55F158R&	158	30	F	NONINDUCTIVE	R	P	DAL

RER55F162R&	162	30	F	NONINDUCTIVE	R	P	DAL
RER55F165R&	165	30	F	NONINDUCTIVE	R	P	DAL
RER55F169R&	169	30	F	NONINDUCTIVE	R	P	DAL
RER55F174R&	174	30	F	NONINDUCTIVE	R	P	DAL
RER55F178R&	178	30	F	NONINDUCTIVE	R	P	DAL
RER55F182R&	182	30	F	NONINDUCTIVE	R	P	DAL
RER55F187R&	187	30	F	NONINDUCTIVE	R	P	DAL
	Resistance	Power	Resistance		Level 1	Level 2	
Part Number	Value (Ohms)	Rating (W)	Tolerance	Winding	(FRL)(&)	(FRL)(&)	Manufacturer
RER55F191R&	191	30	F	NONINDUCTIVE	R	P	DAL
RER55F196R&	196	30	F	NONINDUCTIVE	R	P	DAL
RER55F200R&	200	30	F	NONINDUCTIVE	R	P	DAL
RER55F205R&	205	30	F	NONINDUCTIVE	R	P	DAL
RER55F210R&	210	30	F	NONINDUCTIVE	R	P	DAL
RER55F215R&	215	30	F	NONINDUCTIVE	R	P	DAL
RER55F221R&	221	30	F	NONINDUCTIVE	R	P	DAL
RER55F226R&	226	30	F	NONINDUCTIVE	R	P	DAL
RER55F232R&	232	30	F	NONINDUCTIVE	R	P	DAL
RER55F237R&	237	30	F	NONINDUCTIVE	R	P	DAL
RER55F243R&	243	30	F	NONINDUCTIVE	R	P	DAL
RER55F249R&	249	30	F	NONINDUCTIVE	R	P	DAL
RER55F255R&	255	30	F	NONINDUCTIVE	R	P	DAL
RER55F261R&	261	30	F	NONINDUCTIVE	R	P	DAL
	Resistance	Power	Resistance		Level 1	Level 2	
Part Number	Value (Ohms)	Rating (W)	Tolerance	Winding	(FRL)(&)	(FRL)(&)	Manufacturer
RER55F267R&	267	30	F	NONINDUCTIVE	R	P	DAL
RER55F274R&	274	30	F	NONINDUCTIVE	R	P	DAL
RER55F280R&	280	30	F	NONINDUCTIVE	R	P	DAL
RER55F287R&	287	30	F	NONINDUCTIVE	R	P	DAL
RER55F294R&	294	30	F	NONINDUCTIVE	R	P	DAL
RER55F301R&	301	30	F	NONINDUCTIVE	R	P	DAL
RER55F309R&	309	30	F	NONINDUCTIVE	R	P	DAL
RER55F316R&	316	30	F	NONINDUCTIVE	R	P	DAL
RER55F324R&	324	30	F	NONINDUCTIVE	R	P	DAL
RER55F332R&	332	30	F	NONINDUCTIVE	R	P	DAL
RER55F340R&	340	30	F	NONINDUCTIVE	R	P	DAL
RER55F348R&	348	30	F	NONINDUCTIVE	R	P	DAL
RER55F357R&	357	30	F	NONINDUCTIVE	R	P	DAL
	Resistance	Power	Resistance		Level 1	Level 2	
Part Number	Value (Ohms)	Rating (W)	Tolerance	Winding	(FRL)(&)	(FRL)(&)	Manufacturer
RER55F365R&	365	30	F	NONINDUCTIVE	R	P	DAL
RER55F374R&	374	30	F	NONINDUCTIVE	R	P	DAL
RER55F383R&	383	30	F	NONINDUCTIVE	R	P	DAL
RER55F392R&	392	30	F	NONINDUCTIVE	R	P	DAL
RER55F402R&	402	30	F	NONINDUCTIVE	R	P	DAL
RER55F412R&	412	30	F	NONINDUCTIVE	R	P	DAL
RER55F422R&	422	30	F	NONINDUCTIVE	R	P	DAL

RER55F432R&	432	30	F	NONINDUCTIVE	R	P	DAL
RER55F442R&	442	30	F	NONINDUCTIVE	R	P	DAL
RER55F453R&	453	30	F	NONINDUCTIVE	R	P	DAL
RER55F464R&	464	30	F	NONINDUCTIVE	R	P	DAL
RER55F475R&	475	30	F	NONINDUCTIVE	R	P	DAL
RER55F487R&	487	30	F	NONINDUCTIVE	R	P	DAL
RER55F499R&	499	30	F	NONINDUCTIVE	R	P	DAL
	Resistance	Power	Resistance		Level 1	Level 2	
Part Number	Value (Ohms)	Rating (W)	Tolerance	Winding	(FRL)(&)	(FRL)(&)	Manufacturer
RER55F511R&	511	30	F	NONINDUCTIVE	R	P	DAL
RER55F523R&	523	30	F	NONINDUCTIVE	R	P	DAL
RER55F536R&	536	30	F	NONINDUCTIVE	R	P	DAL
RER55F549R&	549	30	F	NONINDUCTIVE	R	P	DAL
RER55F562R&	562	30	F	NONINDUCTIVE	R	P	DAL
RER55F576R&	576	30	F	NONINDUCTIVE	R	P	DAL
RER55F590R&	590	30	F	NONINDUCTIVE	R	P	DAL
RER55F604R&	604	30	F	NONINDUCTIVE	R	P	DAL
RER55F619R&	619	30	F	NONINDUCTIVE	R	P	DAL
RER55F634R&	634	30	F	NONINDUCTIVE	R	P	DAL
RER55F649R&	649	30	F	NONINDUCTIVE	R	P	DAL
RER55F665R&	665	30	F	NONINDUCTIVE	R	P	DAL
RER55F681R&	681	30	F	NONINDUCTIVE	R	P	DAL
	Resistance	Power	Resistance		Level 1	Level 2	
Part Number	Value (Ohms)	Rating (W)	Tolerance	Winding	(FRL)(&)	(FRL)(&)	Manufacturer
RER55F698R&	698	30	F	NONINDUCTIVE	R	P	DAL
RER55F715R&	715	30	F	NONINDUCTIVE	R	P	DAL
RER55F732R&	732	30	F	NONINDUCTIVE	R	P	DAL
RER55F750R&	750	30	F	NONINDUCTIVE	R	P	DAL
RER55F768R&	768	30	F	NONINDUCTIVE	R	P	DAL
RER55F787R&	787	30	F	NONINDUCTIVE	R	P	DAL
RER55F806R&	806	30	F	NONINDUCTIVE	R	P	DAL
RER55F825R&	825	30	F	NONINDUCTIVE	R	P	DAL
RER55F845R&	845	30	F	NONINDUCTIVE	R	P	DAL
RER55F866R&	866	30	F	NONINDUCTIVE	R	P	DAL
RER55F887R&	887	30	F	NONINDUCTIVE	R	P	DAL
RER55F909R&	909	30	F	NONINDUCTIVE	R	P	DAL
RER55F931R&	931	30	F	NONINDUCTIVE	R	P	DAL
RER55F953R&	953	30	F	NONINDUCTIVE	R	P	DAL
RER55F976R&	976	30	F	NONINDUCTIVE	R	P	DAL
	Resistance	Power	Resistance		Level 1	Level 2	
Part Number	Value (Ohms)	Rating (W)	Tolerance	Winding	(FRL)(&)	(FRL)(&)	Manufacturer

RER55 Wirewound Resistors: 1000 Ohms through 9760 Ohms

	Resistance	Power	Resistance		Level 1	Level 2	

Part Number	Value (Ohms)	Rating (W)	Tolerance	Winding	(FRL)(&)	(FRL)(&)	Manufacturer
RER55F1001&	1,000	30	F	NONINDUCTIVE	R	P	DAL
RER55F1021&	1,020	30	F	NONINDUCTIVE	R	P	DAL
RER55F1051&	1,050	30	F	NONINDUCTIVE	R	P	DAL
RER55F1071&	1,070	30	F	NONINDUCTIVE	R	P	DAL
RER55F1101&	1,100	30	F	NONINDUCTIVE	R	P	DAL
RER55F1131&	1,130	30	F	NONINDUCTIVE	R	P	DAL
RER55F1151&	1,150	30	F	NONINDUCTIVE	R	P	DAL
RER55F1181&	1,180	30	F	NONINDUCTIVE	R	P	DAL
RER55F1211&	1,210	30	F	NONINDUCTIVE	R	P	DAL
RER55F1241&	1,240	30	F	NONINDUCTIVE	R	P	DAL
RER55F1271&	1,270	30	F	NONINDUCTIVE	R	P	DAL
RER55F1301&	1,300	30	F	NONINDUCTIVE	R	P	DAL
RER55F1331&	1,330	30	F	NONINDUCTIVE	R	P	DAL
RER55F1371&	1,370	30	F	NONINDUCTIVE	R	P	DAL
	Resistance	Power	Resistance		Level 1	Level 2	
Part Number	Value (Ohms)	Rating (W)	Tolerance	Winding	(FRL)(&)	(FRL)(&)	Manufacturer
RER55F1401&	1,400	30	F	NONINDUCTIVE	R	P	DAL
RER55F1431&	1,430	30	F	NONINDUCTIVE	R	P	DAL
RER55F1471&	1,470	30	F	NONINDUCTIVE	R	P	DAL
RER55F1501&	1,500	30	F	NONINDUCTIVE	R	P	DAL
RER55F1541&	1,540	30	F	NONINDUCTIVE	R	P	DAL
RER55F1581&	1,580	30	F	NONINDUCTIVE	R	P	DAL
RER55F1621&	1,620	30	F	NONINDUCTIVE	R	P	DAL
RER55F1651&	1,650	30	F	NONINDUCTIVE	R	P	DAL
RER55F1691&	1,690	30	F	NONINDUCTIVE	R	P	DAL
RER55F1741&	1,740	30	F	NONINDUCTIVE	R	P	DAL
RER55F1781&	1,780	30	F	NONINDUCTIVE	R	P	DAL
RER55F1821&	1,820	30	F	NONINDUCTIVE	R	P	DAL
RER55F1871&	1,870	30	F	NONINDUCTIVE	R	P	DAL
	Resistance	Power	Resistance		Level 1	Level 2	
Part Number	Value (Ohms)	Rating (W)	Tolerance	Winding	(FRL)(&)	(FRL)(&)	Manufacturer
RER55F1911&	1,910	30	F	NONINDUCTIVE	R	P	DAL
RER55F1961&	1,960	30	F	NONINDUCTIVE	R	P	DAL
RER55F2001&	2,000	30	F	NONINDUCTIVE	R	P	DAL
RER55F2051&	2,050	30	F	NONINDUCTIVE	R	P	DAL
RER55F2101&	2,100	30	F	NONINDUCTIVE	R	P	DAL
RER55F2151&	2,150	30	F	NONINDUCTIVE	R	P	DAL
RER55F2211&	2,210	30	F	NONINDUCTIVE	R	P	DAL
RER55F2261&	2,260	30	F	NONINDUCTIVE	R	P	DAL
RER55F2321&	2,320	30	F	NONINDUCTIVE	R	P	DAL
RER55F2371&	2,370	30	F	NONINDUCTIVE	R	P	DAL
RER55F2431&	2,430	30	F	NONINDUCTIVE	R	P	DAL
RER55F2491&	2,490	30	F	NONINDUCTIVE	R	P	DAL
RER55F2551&	2,550	30	F	NONINDUCTIVE	R	P	DAL
RER55F2611&	2,610	30	F	NONINDUCTIVE	R	P	DAL
	Resistance	Power	Resistance		Level 1	Level 2	

Part Number	Value (Ohms)	Rating (W)	Tolerance	Winding	(FRL)(&)	(FRL)(&)	Manufacturer
RER55F2671&	2,670	30	F	NONINDUCTIVE	R	P	DAL
RER55F2741&	2,740	30	F	NONINDUCTIVE	R	P	DAL
RER55F2801&	2,800	30	F	NONINDUCTIVE	R	P	DAL
RER55F2871&	2,870	30	F	NONINDUCTIVE	R	P	DAL
RER55F2941&	2,940	30	F	NONINDUCTIVE	R	P	DAL
RER55F3011&	3,010	30	F	NONINDUCTIVE	R	P	DAL
RER55F3091&	3,090	30	F	NONINDUCTIVE	R	P	DAL
RER55F3161&	3,160	30	F	NONINDUCTIVE	R	P	DAL
RER55F3241&	3,240	30	F	NONINDUCTIVE	R	P	DAL
RER55F3321&	3,320	30	F	NONINDUCTIVE	R	P	DAL
RER55F3401&	3,400	30	F	NONINDUCTIVE	R	P	DAL
RER55F3481&	3,480	30	F	NONINDUCTIVE	R	P	DAL
RER55F3571&	3,570	30	F	NONINDUCTIVE	R	P	DAL
	Resistance	Power	Resistance		Level 1	Level 2	
Part Number	Value (Ohms)	Rating (W)	Tolerance	Winding	(FRL)(&)	(FRL)(&)	Manufacturer
RER55F3651&	3,650	30	F	NONINDUCTIVE	R	P	DAL
RER55F3741&	3,740	30	F	NONINDUCTIVE	R	P	DAL
RER55F3831&	3,830	30	F	NONINDUCTIVE	R	P	DAL
RER55F3921&	3,920	30	F	NONINDUCTIVE	R	P	DAL
RER55F4021&	4,020	30	F	NONINDUCTIVE	R	P	DAL
RER55F4121&	4,120	30	F	NONINDUCTIVE	R	P	DAL
RER55F4221&	4,220	30	F	NONINDUCTIVE	R	P	DAL
RER55F4321&	4,320	30	F	NONINDUCTIVE	R	P	DAL
RER55F4421&	4,420	30	F	NONINDUCTIVE	R	P	DAL
RER55F4531&	4,530	30	F	NONINDUCTIVE	R	P	DAL
RER55F4641&	4,640	30	F	NONINDUCTIVE	R	P	DAL
RER55F4751&	4,750	30	F	NONINDUCTIVE	R	P	DAL
RER55F4871&	4,870	30	F	NONINDUCTIVE	R	P	DAL
RER55F4991&	4,990	30	F	NONINDUCTIVE	R	P	DAL
	Resistance	Power	Resistance		Level 1	Level 2	
Part Number	Value (Ohms)	Rating (W)	Tolerance	Winding	(FRL)(&)	(FRL)(&)	Manufacturer
RER55F5111&	5,110	30	F	NONINDUCTIVE	R	P	-
RER55F5231&	5,230	30	F	NONINDUCTIVE	R	P	-
RER55F5361&	5,360	30	F	NONINDUCTIVE	R	P	-
RER55F5491&	5,490	30	F	NONINDUCTIVE	R	P	-
RER55F5621&	5,620	30	F	NONINDUCTIVE	R	P	-
RER55F5761&	5,760	30	F	NONINDUCTIVE	R	P	-
RER55F5901&	5,900	30	F	NONINDUCTIVE	R	P	-
RER55F6041&	6,040	30	F	NONINDUCTIVE	R	P	-
RER55F6191&	6,190	30	F	NONINDUCTIVE	R	P	-
RER55F6341&	6,340	30	F	NONINDUCTIVE	R	P	-
RER55F6491&	6,490	30	F	NONINDUCTIVE	R	P	-
RER55F6651&	6,650	30	F	NONINDUCTIVE	R	P	-
RER55F6811&	6,810	30	F	NONINDUCTIVE	R	P	-
	Resistance	Power	Resistance		Level 1	Level 2	
Part Number	Value (Ohms)	Rating (W)	Tolerance	Winding	(FRL)(&)	(FRL)(&)	Manufacturer

RER55F6981&	6,980	30	F	NONINDUCTIVE	R	P	-
RER55F7151&	7,150	30	F	NONINDUCTIVE	R	P	-
RER55F7321&	7,320	30	F	NONINDUCTIVE	R	P	-
RER55F7501&	7,500	30	F	NONINDUCTIVE	R	P	-
RER55F7681&	7,680	30	F	NONINDUCTIVE	R	P	-
RER55F7871&	7,870	30	F	NONINDUCTIVE	R	P	-
RER55F8061&	8,060	30	F	NONINDUCTIVE	R	P	-
RER55F8251&	8,250	30	F	NONINDUCTIVE	R	P	-
RER55F8451&	8,450	30	F	NONINDUCTIVE	R	P	-
RER55F8661&	8,660	30	F	NONINDUCTIVE	R	P	-
RER55F8871&	8,870	30	F	NONINDUCTIVE	R	P	-
RER55F9091&	9,090	30	F	NONINDUCTIVE	R	P	-
RER55F9311&	9,310	30	F	NONINDUCTIVE	R	P	-
RER55F9531&	9,530	30	F	NONINDUCTIVE	R	P	-
	Resistance	Power	Resistance		Level 1	Level 2	
Part Number	Value (Ohms)	Rating (W)	Tolerance	Winding	(FRL)(&)	(FRL)(&)	Manufacturer
RER55F9761&	9,760	30	F	NONINDUCTIVE	R	P	-

RER55 Wirewound Resistors: 10000 Ohms through 19600 Ohms

	Resistance	Power	Resistance		Level 1	Level 2	
Part Number	Value (Ohms)	Rating (W)	Tolerance	Winding	(FRL)(&)	(FRL)(&)	Manufacturer
RER55F1002&	10,000	30	F	NONINDUCTIVE	R	P	-
RER55F1022&	10,200	30	F	NONINDUCTIVE	R	P	-
RER55F1052&	10,500	30	F	NONINDUCTIVE	R	P	-
RER55F1072&	10,700	30	F	NONINDUCTIVE	R	P	-
RER55F1102&	11,000	30	F	NONINDUCTIVE	R	P	-
RER55F1132&	11,300	30	F	NONINDUCTIVE	R	P	-
RER55F1152&	11,500	30	F	NONINDUCTIVE	R	P	-
RER55F1182&	11,800	30	F	NONINDUCTIVE	R	P	-
RER55F1212&	12,100	30	F	NONINDUCTIVE	R	P	-
RER55F1242&	12,400	30	F	NONINDUCTIVE	R	P	-
RER55F1272&	12,700	30	F	NONINDUCTIVE	R	P	-
RER55F1302&	13,000	30	F	NONINDUCTIVE	R	P	-
RER55F1332&	13,300	30	F	NONINDUCTIVE	R	P	-
RER55F1372&	13,700	30	F	NONINDUCTIVE	R	P	-
	Resistance	Power	Resistance		Level 1	Level 2	
Part Number	Value (Ohms)	Rating (W)	Tolerance	Winding	(FRL)(&)	(FRL)(&)	Manufacturer
RER55F1402&	14,000	30	F	NONINDUCTIVE	R	P	-
RER55F1432&	14,300	30	F	NONINDUCTIVE	R	P	-
RER55F1472&	14,700	30	F	NONINDUCTIVE	R	P	-
RER55F1502&	15,000	30	F	NONINDUCTIVE	R	P	-
RER55F1542&	15,400	30	F	NONINDUCTIVE	R	P	-
RER55F1582&	15,800	30	F	NONINDUCTIVE	R	P	-
RER55F1622&	16,200	30	F	NONINDUCTIVE	R	P	-

RER55F1652&	16,500	30	F	NONINDUCTIVE	R	P	-
RER55F1692&	16,900	30	F	NONINDUCTIVE	R	P	-
RER55F1742&	17,400	30	F	NONINDUCTIVE	R	P	-
RER55F1782&	17,800	30	F	NONINDUCTIVE	R	P	-
RER55F1822&	18,200	30	F	NONINDUCTIVE	R	P	-
RER55F1872&	18,700	30	F	NONINDUCTIVE	R	P	-
	Resistance	Power	Resistance		Level 1	Level 2	
Part Number	Value (Ohms)	Rating (W)	Tolerance	Winding	(FRL)(&)	(FRL)(&)	Manufacturer
RER55F1912&	19,100	30	F	NONINDUCTIVE	R	P	-
RER55F1962&	19,600	30	F	NONINDUCTIVE	R	P	-

RER60 Wirewound Resistors

	Resistance	Power	Resistance		Level 1	Level 2	
Part Number	Value (Ohms)	Rating (W)	Tolerance	Winding	(FRL)(&)	(FRL)(&)	Manufacturer
RER60FR100&	0.100	5	F	INDUCTIVE	R	P	DAL
RER60FR102&	0.102	5	F	INDUCTIVE	R	P	DAL
RER60FR105&	0.105	5	F	INDUCTIVE	R	P	DAL
RER60FR107&	0.107	5	F	INDUCTIVE	R	P	DAL
RER60FR110&	0.110	5	F	INDUCTIVE	R	P	DAL
RER60FR113&	0.113	5	F	INDUCTIVE	R	P	DAL
RER60FR115&	0.115	5	F	INDUCTIVE	R	P	DAL
RER60FR118&	0.118	5	F	INDUCTIVE	R	P	DAL
RER60FR121&	0.121	5	F	INDUCTIVE	R	P	DAL
RER60FR124&	0.124	5	F	INDUCTIVE	R	P	DAL
RER60FR127&	0.127	5	F	INDUCTIVE	R	P	DAL
RER60FR130&	0.130	5	F	INDUCTIVE	R	P	DAL
RER60FR133&	0.133	5	F	INDUCTIVE	R	P	DAL
RER60FR137&	0.137	5	F	INDUCTIVE	R	P	DAL
RER60FR140&	0.140	5	F	INDUCTIVE	R	P	DAL
RER60FR143&	0.143	5	F	INDUCTIVE	R	P	DAL
RER60FR147&	0.147	5	F	INDUCTIVE	R	P	DAL
RER60FR150&	0.150	5	F	INDUCTIVE	R	P	DAL
RER60FR154&	0.154	5	F	INDUCTIVE	R	P	DAL
RER60FR158&	0.158	5	F	INDUCTIVE	R	P	DAL
RER60FR162&	0.162	5	F	INDUCTIVE	R	P	DAL
RER60FR165&	0.165	5	F	INDUCTIVE	R	P	DAL
RER60FR169&	0.169	5	F	INDUCTIVE	R	P	DAL
RER60FR174&	0.174	5	F	INDUCTIVE	R	P	DAL
RER60FR178&	0.178	5	F	INDUCTIVE	R	P	DAL
RER60FR182&	0.182	5	F	INDUCTIVE	R	P	DAL
RER60FR187&	0.187	5	F	INDUCTIVE	R	P	DAL
RER60FR191&	0.191	5	F	INDUCTIVE	R	P	DAL
RER60FR196&	0.196	5	F	INDUCTIVE	R	P	DAL
RER60FR200&	0.200	5	F	INDUCTIVE	R	P	DAL

RER60FR205&	0.205	5	F	INDUCTIVE	R	P	DAL
RER60FR210&	0.210	5	F	INDUCTIVE	R	P	DAL
RER60FR215&	0.215	5	F	INDUCTIVE	R	P	DAL
RER60FR221&	0.221	5	F	INDUCTIVE	R	P	DAL
RER60FR226&	0.226	5	F	INDUCTIVE	R	P	DAL
RER60FR232&	0.232	5	F	INDUCTIVE	R	P	DAL
RER60FR237&	0.237	5	F	INDUCTIVE	R	P	DAL
RER60FR243&	0.243	5	F	INDUCTIVE	R	P	DAL
RER60FR249&	0.249	5	F	INDUCTIVE	R	P	DAL
RER60FR255&	0.255	5	F	INDUCTIVE	R	P	DAL
RER60FR261&	0.261	5	F	INDUCTIVE	R	P	DAL
RER60FR267&	0.267	5	F	INDUCTIVE	R	P	DAL
RER60FR274&	0.274	5	F	INDUCTIVE	R	P	DAL
RER60FR280&	0.280	5	F	INDUCTIVE	R	P	DAL
RER60FR287&	0.287	5	F	INDUCTIVE	R	P	DAL
RER60FR294&	0.294	5	F	INDUCTIVE	R	P	DAL
RER60FR301&	0.301	5	F	INDUCTIVE	R	P	DAL
RER60FR309&	0.309	5	F	INDUCTIVE	R	P	DAL
RER60FR316&	0.316	5	F	INDUCTIVE	R	P	DAL
RER60FR324&	0.324	5	F	INDUCTIVE	R	P	DAL
RER60FR332&	0.332	5	F	INDUCTIVE	R	P	DAL
RER60FR340&	0.340	5	F	INDUCTIVE	R	P	DAL
RER60FR348&	0.348	5	F	INDUCTIVE	R	P	DAL
RER60FR357&	0.357	5	F	INDUCTIVE	R	P	DAL
RER60FR365&	0.365	5	F	INDUCTIVE	R	P	DAL
RER60FR374&	0.374	5	F	INDUCTIVE	R	P	DAL
RER60FR383&	0.383	5	F	INDUCTIVE	R	P	DAL
RER60FR392&	0.392	5	F	INDUCTIVE	R	P	DAL
RER60FR402&	0.402	5	F	INDUCTIVE	R	P	DAL
RER60FR412&	0.412	5	F	INDUCTIVE	R	P	DAL
RER60FR422&	0.422	5	F	INDUCTIVE	R	P	DAL
RER60FR432&	0.432	5	F	INDUCTIVE	R	P	DAL
RER60FR442&	0.442	5	F	INDUCTIVE	R	P	DAL
RER60FR453&	0.453	5	F	INDUCTIVE	R	P	DAL
RER60FR464&	0.464	5	F	INDUCTIVE	R	P	DAL
RER60FR475&	0.475	5	F	INDUCTIVE	R	P	DAL
RER60FR487&	0.487	5	F	INDUCTIVE	R	P	DAL
RER60FR499&	0.499	5	F	INDUCTIVE	R	P	DAL
RER60FR511&	0.511	5	F	INDUCTIVE	R	P	DAL
RER60FR523&	0.523	5	F	INDUCTIVE	R	P	DAL
RER60FR536&	0.536	5	F	INDUCTIVE	R	P	DAL
RER60FR549&	0.549	5	F	INDUCTIVE	R	P	DAL
RER60FR562&	0.562	5	F	INDUCTIVE	R	P	DAL
RER60FR576&	0.576	5	F	INDUCTIVE	R	P	DAL
RER60FR590&	0.590	5	F	INDUCTIVE	R	P	DAL
RER60FR604&	0.604	5	F	INDUCTIVE	R	P	DAL
RER60FR619&	0.619	5	F	INDUCTIVE	R	P	DAL

RER60FR634&	0.634	5	F	INDUCTIVE	R	P	DAL
RER60FR649&	0.649	5	F	INDUCTIVE	R	P	DAL
RER60FR665&	0.665	5	F	INDUCTIVE	R	P	DAL
RER60FR681&	0.681	5	F	INDUCTIVE	R	P	DAL
RER60FR698&	0.698	5	F	INDUCTIVE	R	P	DAL
RER60FR715&	0.715	5	F	INDUCTIVE	R	P	DAL
RER60FR732&	0.732	5	F	INDUCTIVE	R	P	DAL
RER60FR750&	0.750	5	F	INDUCTIVE	R	P	DAL
RER60FR768&	0.768	5	F	INDUCTIVE	R	P	DAL
RER60FR787&	0.787	5	F	INDUCTIVE	R	P	DAL
RER60FR806&	0.806	5	F	INDUCTIVE	R	P	DAL
RER60FR825&	0.825	5	F	INDUCTIVE	R	P	DAL
RER60FR845&	0.845	5	F	INDUCTIVE	R	P	DAL
RER60FR866&	0.866	5	F	INDUCTIVE	R	P	DAL
RER60FR887&	0.887	5	F	INDUCTIVE	R	P	DAL
RER60FR909&	0.909	5	F	INDUCTIVE	R	P	DAL
RER60FR931&	0.931	5	F	INDUCTIVE	R	P	DAL
RER60FR953&	0.953	5	F	INDUCTIVE	R	P	DAL
RER60FR976&	0.976	5	F	INDUCTIVE	R	P	DAL
RER60F1R00&	1.00	5	F	INDUCTIVE	R	P	DAL
RER60F1R02&	1.02	5	F	INDUCTIVE	R	P	DAL
RER60F1R05&	1.05	5	F	INDUCTIVE	R	P	DAL
RER60F1R07&	1.07	5	F	INDUCTIVE	R	P	DAL
RER60F1R10&	1.10	5	F	INDUCTIVE	R	P	DAL
RER60F1R13&	1.13	5	F	INDUCTIVE	R	P	DAL
RER60F1R15&	1.15	5	F	INDUCTIVE	R	P	DAL
RER60F1R18&	1.18	5	F	INDUCTIVE	R	P	DAL
RER60F1R21&	1.21	5	F	INDUCTIVE	R	P	DAL
RER60F1R24&	1.24	5	F	INDUCTIVE	R	P	DAL
RER60F1R27&	1.27	5	F	INDUCTIVE	R	P	DAL
RER60F1R30&	1.30	5	F	INDUCTIVE	R	P	DAL
RER60F1R33&	1.33	5	F	INDUCTIVE	R	P	DAL
RER60F1R37&	1.37	5	F	INDUCTIVE	R	P	DAL
RER60F1R40&	1.40	5	F	INDUCTIVE	R	P	DAL
RER60F1R43&	1.43	5	F	INDUCTIVE	R	P	DAL
RER60F1R47&	1.47	5	F	INDUCTIVE	R	P	DAL
RER60F1R50&	1.50	5	F	INDUCTIVE	R	P	DAL
RER60F1R54&	1.54	5	F	INDUCTIVE	R	P	DAL
RER60F1R58&	1.58	5	F	INDUCTIVE	R	P	DAL
RER60F1R62&	1.62	5	F	INDUCTIVE	R	P	DAL
RER60F1R65&	1.65	5	F	INDUCTIVE	R	P	DAL
RER60F1R69&	1.69	5	F	INDUCTIVE	R	P	DAL
RER60F1R74&	1.74	5	F	INDUCTIVE	R	P	DAL
RER60F1R78&	1.78	5	F	INDUCTIVE	R	P	DAL
RER60F1R82&	1.82	5	F	INDUCTIVE	R	P	DAL
RER60F1R87&	1.87	5	F	INDUCTIVE	R	P	DAL
RER60F1R91&	1.91	5	F	INDUCTIVE	R	P	DAL

RER60F1R96&	1.96	5	F	INDUCTIVE	R	P	DAL
RER60F2R00&	2.00	5	F	INDUCTIVE	R	P	DAL
RER60F2R05&	2.05	5	F	INDUCTIVE	R	P	DAL
RER60F2R10&	2.10	5	F	INDUCTIVE	R	P	DAL
RER60F2R15&	2.15	5	F	INDUCTIVE	R	P	DAL
RER60F2R21&	2.21	5	F	INDUCTIVE	R	P	DAL
RER60F2R26&	2.26	5	F	INDUCTIVE	R	P	DAL
RER60F2R32&	2.32	5	F	INDUCTIVE	R	P	DAL
RER60F2R37&	2.37	5	F	INDUCTIVE	R	P	DAL
RER60F2R43&	2.43	5	F	INDUCTIVE	R	P	DAL
RER60F2R49&	2.49	5	F	INDUCTIVE	R	P	DAL
RER60F2R55&	2.55	5	F	INDUCTIVE	R	P	DAL
RER60F2R61&	2.61	5	F	INDUCTIVE	R	P	DAL
RER60F2R67&	2.67	5	F	INDUCTIVE	R	P	DAL
RER60F2R74&	2.74	5	F	INDUCTIVE	R	P	DAL
RER60F2R80&	2.80	5	F	INDUCTIVE	R	P	DAL
RER60F2R87&	2.87	5	F	INDUCTIVE	R	P	DAL
RER60F2R94&	2.94	5	F	INDUCTIVE	R	P	DAL
RER60F3R01&	3.01	5	F	INDUCTIVE	R	P	DAL
RER60F3R09&	3.09	5	F	INDUCTIVE	R	P	DAL
RER60F3R16&	3.16	5	F	INDUCTIVE	R	P	DAL
RER60F3R24&	3.24	5	F	INDUCTIVE	R	P	DAL
RER60F3R32&	3.32	5	F	INDUCTIVE	R	P	DAL
RER60F3R40&	3.40	5	F	INDUCTIVE	R	P	DAL
RER60F3R48&	3.48	5	F	INDUCTIVE	R	P	DAL
RER60F3R57&	3.57	5	F	INDUCTIVE	R	P	DAL
RER60F3R65&	3.65	5	F	INDUCTIVE	R	P	DAL
RER60F3R74&	3.74	5	F	INDUCTIVE	R	P	DAL
RER60F3R83&	3.83	5	F	INDUCTIVE	R	P	DAL
RER60F3R92&	3.92	5	F	INDUCTIVE	R	P	DAL
RER60F4R02&	4.02	5	F	INDUCTIVE	R	P	DAL
RER60F4R12&	4.12	5	F	INDUCTIVE	R	P	DAL
RER60F4R22&	4.22	5	F	INDUCTIVE	R	P	DAL
RER60F4R32&	4.32	5	F	INDUCTIVE	R	P	DAL
RER60F4R42&	4.42	5	F	INDUCTIVE	R	P	DAL
RER60F4R53&	4.53	5	F	INDUCTIVE	R	P	DAL
RER60F4R64&	4.64	5	F	INDUCTIVE	R	P	DAL
RER60F4R75&	4.75	5	F	INDUCTIVE	R	P	DAL
RER60F4R87&	4.87	5	F	INDUCTIVE	R	P	DAL
RER60F4R99&	4.99	5	F	INDUCTIVE	R	P	DAL
RER60F5R11&	5.11	5	F	INDUCTIVE	R	P	DAL
RER60F5R23&	5.23	5	F	INDUCTIVE	R	P	DAL
RER60F5R36&	5.36	5	F	INDUCTIVE	R	P	DAL
RER60F5R49&	5.49	5	F	INDUCTIVE	R	P	DAL
RER60F5R62&	5.62	5	F	INDUCTIVE	R	P	DAL
RER60F5R76&	5.76	5	F	INDUCTIVE	R	P	DAL
RER60F5R90&	5.90	5	F	INDUCTIVE	R	P	DAL

RER60F6R04&	6.04	5	F	INDUCTIVE	R	P	DAL
RER60F6R19&	6.19	5	F	INDUCTIVE	R	P	DAL
RER60F6R34&	6.34	5	F	INDUCTIVE	R	P	DAL
RER60F6R49&	6.49	5	F	INDUCTIVE	R	P	DAL
RER60F6R65&	6.65	5	F	INDUCTIVE	R	P	DAL
RER60F6R81&	6.81	5	F	INDUCTIVE	R	P	DAL
RER60F6R98&	6.98	5	F	INDUCTIVE	R	P	DAL
RER60F7R15&	7.15	5	F	INDUCTIVE	R	P	DAL
RER60F7R32&	7.32	5	F	INDUCTIVE	R	P	DAL
RER60F7R50&	7.50	5	F	INDUCTIVE	R	P	DAL
RER60F7R68&	7.68	5	F	INDUCTIVE	R	P	DAL
RER60F7R87&	7.87	5	F	INDUCTIVE	R	P	DAL
RER60F8R06&	8.06	5	F	INDUCTIVE	R	P	DAL
RER60F8R25&	8.25	5	F	INDUCTIVE	R	P	DAL
RER60F8R45&	8.45	5	F	INDUCTIVE	R	P	DAL
RER60F8R66&	8.66	5	F	INDUCTIVE	R	P	DAL
RER60F8R87&	8.87	5	F	INDUCTIVE	R	P	DAL
RER60F9R09&	9.09	5	F	INDUCTIVE	R	P	DAL
RER60F9R31&	9.31	5	F	INDUCTIVE	R	P	DAL
RER60F9R53&	9.53	5	F	INDUCTIVE	R	P	DAL
RER60F9R76&	9.76	5	F	INDUCTIVE	R	P	DAL
RER60F10R0&	10.0	5	F	INDUCTIVE	R	P	DAL
RER60F10R2&	10.2	5	F	INDUCTIVE	R	P	DAL
RER60F10R5&	10.5	5	F	INDUCTIVE	R	P	DAL
RER60F10R7&	10.7	5	F	INDUCTIVE	R	P	DAL
RER60F11R0&	11.0	5	F	INDUCTIVE	R	P	DAL
RER60F11R3&	11.3	5	F	INDUCTIVE	R	P	DAL
RER60F11R5&	11.5	5	F	INDUCTIVE	R	P	DAL
RER60F11R8&	11.8	5	F	INDUCTIVE	R	P	DAL
RER60F12R1&	12.1	5	F	INDUCTIVE	R	P	DAL
RER60F12R4&	12.4	5	F	INDUCTIVE	R	P	DAL
RER60F12R7&	12.7	5	F	INDUCTIVE	R	P	DAL
RER60F13R0&	13.0	5	F	INDUCTIVE	R	P	DAL
RER60F13R3&	13.3	5	F	INDUCTIVE	R	P	DAL
RER60F13R7&	13.7	5	F	INDUCTIVE	R	P	DAL
RER60F14R0&	14.0	5	F	INDUCTIVE	R	P	DAL
RER60F14R3&	14.3	5	F	INDUCTIVE	R	P	DAL
RER60F14R7&	14.7	5	F	INDUCTIVE	R	P	DAL
RER60F15R0&	15.0	5	F	INDUCTIVE	R	P	DAL
RER60F15R4&	15.4	5	F	INDUCTIVE	R	P	DAL
RER60F15R8&	15.8	5	F	INDUCTIVE	R	P	DAL
RER60F16R2&	16.2	5	F	INDUCTIVE	R	P	DAL
RER60F16R5&	16.5	5	F	INDUCTIVE	R	P	DAL
RER60F16R9&	16.9	5	F	INDUCTIVE	R	P	DAL
RER60F17R4&	17.4	5	F	INDUCTIVE	R	P	DAL
RER60F17R8&	17.8	5	F	INDUCTIVE	R	P	DAL
RER60F18R2&	18.2	5	F	INDUCTIVE	R	P	DAL

RER60F18R7&	18.7	5	F	INDUCTIVE	R	P	DAL
RER60F19R1&	19.1	5	F	INDUCTIVE	R	P	DAL
RER60F19R6&	19.6	5	F	INDUCTIVE	R	P	DAL
RER60F20R0&	20.0	5	F	INDUCTIVE	R	P	DAL
RER60F20R5&	20.5	5	F	INDUCTIVE	R	P	DAL
RER60F21R0&	21.0	5	F	INDUCTIVE	R	P	DAL
RER60F21R5&	21.5	5	F	INDUCTIVE	R	P	DAL
RER60F22R1&	22.1	5	F	INDUCTIVE	R	P	DAL
RER60F22R6&	22.6	5	F	INDUCTIVE	R	P	DAL
RER60F23R2&	23.2	5	F	INDUCTIVE	R	P	DAL
RER60F23R7&	23.7	5	F	INDUCTIVE	R	P	DAL
RER60F24R3&	24.3	5	F	INDUCTIVE	R	P	DAL
RER60F24R9&	24.9	5	F	INDUCTIVE	R	P	DAL
RER60F25R5&	25.5	5	F	INDUCTIVE	R	P	DAL
RER60F26R1&	26.1	5	F	INDUCTIVE	R	P	DAL
RER60F26R7&	26.7	5	F	INDUCTIVE	R	P	DAL
RER60F27R4&	27.4	5	F	INDUCTIVE	R	P	DAL
RER60F28R0&	28.0	5	F	INDUCTIVE	R	P	DAL
RER60F28R7&	28.7	5	F	INDUCTIVE	R	P	DAL
RER60F29R4&	29.4	5	F	INDUCTIVE	R	P	DAL
RER60F30R1&	30.1	5	F	INDUCTIVE	R	P	DAL
RER60F30R9&	30.9	5	F	INDUCTIVE	R	P	DAL
RER60F31R6&	31.6	5	F	INDUCTIVE	R	P	DAL
RER60F32R4&	32.4	5	F	INDUCTIVE	R	P	DAL
RER60F33R2&	33.2	5	F	INDUCTIVE	R	P	DAL
RER60F34R0&	34.0	5	F	INDUCTIVE	R	P	DAL
RER60F34R8&	34.8	5	F	INDUCTIVE	R	P	DAL
RER60F35R7&	35.7	5	F	INDUCTIVE	R	P	DAL
RER60F36R5&	36.5	5	F	INDUCTIVE	R	P	DAL
RER60F37R4&	37.4	5	F	INDUCTIVE	R	P	DAL
RER60F38R3&	38.3	5	F	INDUCTIVE	R	P	DAL
RER60F39R2&	39.2	5	F	INDUCTIVE	R	P	DAL
RER60F40R2&	40.2	5	F	INDUCTIVE	R	P	DAL
RER60F41R2&	41.2	5	F	INDUCTIVE	R	P	DAL
RER60F42R2&	42.2	5	F	INDUCTIVE	R	P	DAL
RER60F43R2&	43.2	5	F	INDUCTIVE	R	P	DAL
RER60F44R2&	44.2	5	F	INDUCTIVE	R	P	DAL
RER60F45R3&	45.3	5	F	INDUCTIVE	R	P	DAL
RER60F46R4&	46.4	5	F	INDUCTIVE	R	P	DAL
RER60F47R5&	47.5	5	F	INDUCTIVE	R	P	DAL
RER60F48R7&	48.7	5	F	INDUCTIVE	R	P	DAL
RER60F49R9&	49.9	5	F	INDUCTIVE	R	P	DAL
RER60F51R1&	51.1	5	F	INDUCTIVE	R	P	DAL
RER60F52R3&	52.3	5	F	INDUCTIVE	R	P	DAL
RER60F53R6&	53.6	5	F	INDUCTIVE	R	P	DAL
RER60F54R9&	54.9	5	F	INDUCTIVE	R	P	DAL
RER60F56R2&	56.2	5	F	INDUCTIVE	R	P	DAL

RER60F57R6&	57.6	5	F	INDUCTIVE	R	P	DAL
RER60F59R0&	59.0	5	F	INDUCTIVE	R	P	DAL
RER60F60R4&	60.4	5	F	INDUCTIVE	R	P	DAL
RER60F61R9&	61.9	5	F	INDUCTIVE	R	P	DAL
RER60F63R4&	63.4	5	F	INDUCTIVE	R	P	DAL
RER60F64R9&	64.9	5	F	INDUCTIVE	R	P	DAL
RER60F66R5&	66.5	5	F	INDUCTIVE	R	P	DAL
RER60F68R1&	68.1	5	F	INDUCTIVE	R	P	DAL
RER60F69R8&	69.8	5	F	INDUCTIVE	R	P	DAL
RER60F71R5&	71.5	5	F	INDUCTIVE	R	P	DAL
RER60F73R2&	73.2	5	F	INDUCTIVE	R	P	DAL
RER60F75R0&	75.0	5	F	INDUCTIVE	R	P	DAL
RER60F76R8&	76.8	5	F	INDUCTIVE	R	P	DAL
RER60F78R7&	78.7	5	F	INDUCTIVE	R	P	DAL
RER60F80R6&	80.6	5	F	INDUCTIVE	R	P	DAL
RER60F82R5&	82.5	5	F	INDUCTIVE	R	P	DAL
RER60F84R5&	84.5	5	F	INDUCTIVE	R	P	DAL
RER60F86R6&	86.6	5	F	INDUCTIVE	R	P	DAL
RER60F88R7&	88.7	5	F	INDUCTIVE	R	P	DAL
RER60F90R9&	90.9	5	F	INDUCTIVE	R	P	DAL
RER60F93R1&	93.1	5	F	INDUCTIVE	R	P	DAL
RER60F95R3&	95.3	5	F	INDUCTIVE	R	P	DAL
RER60F97R6&	97.6	5	F	INDUCTIVE	R	P	DAL
RER60F100R&	100	5	F	INDUCTIVE	R	P	DAL
RER60F102R&	102	5	F	INDUCTIVE	R	P	DAL
RER60F105R&	105	5	F	INDUCTIVE	R	P	DAL
RER60F107R&	107	5	F	INDUCTIVE	R	P	DAL
RER60F110R&	110	5	F	INDUCTIVE	R	P	DAL
RER60F113R&	113	5	F	INDUCTIVE	R	P	DAL
RER60F115R&	115	5	F	INDUCTIVE	R	P	DAL
RER60F118R&	118	5	F	INDUCTIVE	R	P	DAL
RER60F121R&	121	5	F	INDUCTIVE	R	P	DAL
RER60F124R&	124	5	F	INDUCTIVE	R	P	DAL
RER60F127R&	127	5	F	INDUCTIVE	R	P	DAL
RER60F130R&	130	5	F	INDUCTIVE	R	P	DAL
RER60F133R&	133	5	F	INDUCTIVE	R	P	DAL
RER60F137R&	137	5	F	INDUCTIVE	R	P	DAL
RER60F140R&	140	5	F	INDUCTIVE	R	P	DAL
RER60F143R&	143	5	F	INDUCTIVE	R	P	DAL
RER60F147R&	147	5	F	INDUCTIVE	R	P	DAL
RER60F150R&	150	5	F	INDUCTIVE	R	P	DAL
RER60F154R&	154	5	F	INDUCTIVE	R	P	DAL
RER60F158R&	158	5	F	INDUCTIVE	R	P	DAL
RER60F162R&	162	5	F	INDUCTIVE	R	P	DAL
RER60F165R&	165	5	F	INDUCTIVE	R	P	DAL
RER60F169R&	169	5	F	INDUCTIVE	R	P	DAL
RER60F174R&	174	5	F	INDUCTIVE	R	P	DAL

RER60F178R&	178	5	F	INDUCTIVE	R	P	DAL
RER60F182R&	182	5	F	INDUCTIVE	R	P	DAL
RER60F187R&	187	5	F	INDUCTIVE	R	P	DAL
RER60F191R&	191	5	F	INDUCTIVE	R	P	DAL
RER60F196R&	196	5	F	INDUCTIVE	R	P	DAL
RER60F200R&	200	5	F	INDUCTIVE	R	P	DAL
RER60F205R&	205	5	F	INDUCTIVE	R	P	DAL
RER60F210R&	210	5	F	INDUCTIVE	R	P	DAL
RER60F215R&	215	5	F	INDUCTIVE	R	P	DAL
RER60F221R&	221	5	F	INDUCTIVE	R	P	DAL
RER60F226R&	226	5	F	INDUCTIVE	R	P	DAL
RER60F232R&	232	5	F	INDUCTIVE	R	P	DAL
RER60F237R&	237	5	F	INDUCTIVE	R	P	DAL
RER60F243R&	243	5	F	INDUCTIVE	R	P	DAL
RER60F249R&	249	5	F	INDUCTIVE	R	P	DAL
RER60F255R&	255	5	F	INDUCTIVE	R	P	DAL
RER60F261R&	261	5	F	INDUCTIVE	R	P	DAL
RER60F267R&	267	5	F	INDUCTIVE	R	P	DAL
RER60F274R&	274	5	F	INDUCTIVE	R	P	DAL
RER60F280R&	280	5	F	INDUCTIVE	R	P	DAL
RER60F287R&	287	5	F	INDUCTIVE	R	P	DAL
RER60F294R&	294	5	F	INDUCTIVE	R	P	DAL
RER60F301R&	301	5	F	INDUCTIVE	R	P	DAL
RER60F309R&	309	5	F	INDUCTIVE	R	P	DAL
RER60F316R&	316	5	F	INDUCTIVE	R	P	DAL
RER60F324R&	324	5	F	INDUCTIVE	R	P	DAL
RER60F332R&	332	5	F	INDUCTIVE	R	P	DAL
RER60F340R&	340	5	F	INDUCTIVE	R	P	DAL
RER60F348R&	348	5	F	INDUCTIVE	R	P	DAL
RER60F357R&	357	5	F	INDUCTIVE	R	P	DAL
RER60F365R&	365	5	F	INDUCTIVE	R	P	DAL
RER60F374R&	374	5	F	INDUCTIVE	R	P	DAL
RER60F383R&	383	5	F	INDUCTIVE	R	P	DAL
RER60F392R&	392	5	F	INDUCTIVE	R	P	DAL
RER60F402R&	402	5	F	INDUCTIVE	R	P	DAL
RER60F412R&	412	5	F	INDUCTIVE	R	P	DAL
RER60F422R&	422	5	F	INDUCTIVE	R	P	DAL
RER60F432R&	432	5	F	INDUCTIVE	R	P	DAL
RER60F442R&	442	5	F	INDUCTIVE	R	P	DAL
RER60F453R&	453	5	F	INDUCTIVE	R	P	DAL
RER60F464R&	464	5	F	INDUCTIVE	R	P	DAL
RER60F475R&	475	5	F	INDUCTIVE	R	P	DAL
RER60F487R&	487	5	F	INDUCTIVE	R	P	DAL
RER60F499R&	499	5	F	INDUCTIVE	R	P	DAL
RER60F511R&	511	5	F	INDUCTIVE	R	P	DAL
RER60F523R&	523	5	F	INDUCTIVE	R	P	DAL
RER60F536R&	536	5	F	INDUCTIVE	R	P	DAL

RER60F549R&	549	5	F	INDUCTIVE	R	P	DAL
RER60F562R&	562	5	F	INDUCTIVE	R	P	DAL
RER60F576R&	576	5	F	INDUCTIVE	R	P	DAL
RER60F590R&	590	5	F	INDUCTIVE	R	P	DAL
RER60F604R&	604	5	F	INDUCTIVE	R	P	DAL
RER60F619R&	619	5	F	INDUCTIVE	R	P	DAL
RER60F634R&	634	5	F	INDUCTIVE	R	P	DAL
RER60F649R&	649	5	F	INDUCTIVE	R	P	DAL
RER60F665R&	665	5	F	INDUCTIVE	R	P	DAL
RER60F681R&	681	5	F	INDUCTIVE	R	P	DAL
RER60F698R&	698	5	F	INDUCTIVE	R	P	DAL
RER60F715R&	715	5	F	INDUCTIVE	R	P	DAL
RER60F732R&	732	5	F	INDUCTIVE	R	P	DAL
RER60F750R&	750	5	F	INDUCTIVE	R	P	DAL
RER60F768R&	768	5	F	INDUCTIVE	R	P	DAL
RER60F787R&	787	5	F	INDUCTIVE	R	P	DAL
RER60F806R&	806	5	F	INDUCTIVE	R	P	DAL
RER60F825R&	825	5	F	INDUCTIVE	R	P	DAL
RER60F845R&	845	5	F	INDUCTIVE	R	P	DAL
RER60F866R&	866	5	F	INDUCTIVE	R	P	DAL
RER60F887R&	887	5	F	INDUCTIVE	R	P	DAL
RER60F909R&	909	5	F	INDUCTIVE	R	P	DAL
RER60F931R&	931	5	F	INDUCTIVE	R	P	DAL
RER60F953R&	953	5	F	INDUCTIVE	R	P	DAL
RER60F976R&	976	5	F	INDUCTIVE	R	P	DAL
RER60F1001&	1,000	5	F	INDUCTIVE	R	P	DAL
RER60F1021&	1,020	5	F	INDUCTIVE	R	P	DAL
RER60F1051&	1,050	5	F	INDUCTIVE	R	P	DAL
RER60F1071&	1,070	5	F	INDUCTIVE	R	P	DAL
RER60F1101&	1,100	5	F	INDUCTIVE	R	P	DAL
RER60F1131&	1,130	5	F	INDUCTIVE	R	P	DAL
RER60F1151&	1,150	5	F	INDUCTIVE	R	P	DAL
RER60F1181&	1,180	5	F	INDUCTIVE	R	P	DAL
RER60F1211&	1,210	5	F	INDUCTIVE	R	P	DAL
RER60F1241&	1,240	5	F	INDUCTIVE	R	P	DAL
RER60F1271&	1,270	5	F	INDUCTIVE	R	P	DAL
RER60F1301&	1,300	5	F	INDUCTIVE	R	P	DAL
RER60F1331&	1,330	5	F	INDUCTIVE	R	P	DAL
RER60F1371&	1,370	5	F	INDUCTIVE	R	P	DAL
RER60F1401&	1,400	5	F	INDUCTIVE	R	P	DAL
RER60F1431&	1,430	5	F	INDUCTIVE	R	P	DAL
RER60F1471&	1,470	5	F	INDUCTIVE	R	P	DAL
RER60F1501&	1,500	5	F	INDUCTIVE	R	P	DAL
RER60F1541&	1,540	5	F	INDUCTIVE	R	P	DAL
RER60F1581&	1,580	5	F	INDUCTIVE	R	P	DAL
RER60F1621&	1,620	5	F	INDUCTIVE	R	P	DAL
RER60F1651&	1,650	5	F	INDUCTIVE	R	P	DAL

RER60F1691&	1,690	5	F	INDUCTIVE	R	P	DAL
RER60F1741&	1,740	5	F	INDUCTIVE	R	P	DAL
RER60F1781&	1,780	5	F	INDUCTIVE	R	P	DAL
RER60F1821&	1,820	5	F	INDUCTIVE	R	P	DAL
RER60F1871&	1,870	5	F	INDUCTIVE	R	P	DAL
RER60F1911&	1,910	5	F	INDUCTIVE	R	P	DAL
RER60F1961&	1,960	5	F	INDUCTIVE	R	P	DAL
RER60F2001&	2,000	5	F	INDUCTIVE	R	P	DAL
RER60F2051&	2,050	5	F	INDUCTIVE	R	P	DAL
RER60F2101&	2,100	5	F	INDUCTIVE	R	P	DAL
RER60F2151&	2,150	5	F	INDUCTIVE	R	P	DAL
RER60F2211&	2,210	5	F	INDUCTIVE	R	P	DAL
RER60F2261&	2,260	5	F	INDUCTIVE	R	P	DAL
RER60F2321&	2,320	5	F	INDUCTIVE	R	P	DAL
RER60F2371&	2,370	5	F	INDUCTIVE	R	P	DAL
RER60F2431&	2,430	5	F	INDUCTIVE	R	P	DAL
RER60F2491&	2,490	5	F	INDUCTIVE	R	P	DAL
RER60F2551&	2,550	5	F	INDUCTIVE	R	P	DAL
RER60F2611&	2,610	5	F	INDUCTIVE	R	P	DAL
RER60F2671&	2,670	5	F	INDUCTIVE	R	P	DAL
RER60F2741&	2,740	5	F	INDUCTIVE	R	P	DAL
RER60F2801&	2,800	5	F	INDUCTIVE	R	P	DAL
RER60F2871&	2,870	5	F	INDUCTIVE	R	P	DAL
RER60F2941&	2,940	5	F	INDUCTIVE	R	P	DAL
RER60F3011&	3,010	5	F	INDUCTIVE	R	P	DAL
RER60F3091&	3,090	5	F	INDUCTIVE	R	P	DAL
RER60F3161&	3,160	5	F	INDUCTIVE	R	P	DAL
RER60F3241&	3,240	5	F	INDUCTIVE	R	P	DAL
RER60F3321&	3,320	5	F	INDUCTIVE	R	P	DAL

RER60 RESISTORS DECADE BREAKDOWN

Click on the link below to see the associated parts selection listing:

Resistance Range
0.100 Ohms through 0.976 Ohms
1.00 Ohms through 9.76 Ohms
10.0 Ohms through 97.6 Ohms
100 Ohms through 976 Ohms
1000 Ohms through 3320 Ohms

RER60 Wirewound Resistors: 0.100 Ohms through 0.976 Ohms

	Resistance	Power	Resistance		Level 1	Level 2	
Part Number	Value (Ohms)	Rating (W)	Tolerance	Winding	(FRL)(&)	(FRL)(&)	Manufacturer

RER60FR100&	0.100	5	F	INDUCTIVE	R	P	DAL
RER60FR102&	0.102	5	F	INDUCTIVE	R	P	DAL
RER60FR105&	0.105	5	F	INDUCTIVE	R	P	DAL
RER60FR107&	0.107	5	F	INDUCTIVE	R	P	DAL
RER60FR110&	0.110	5	F	INDUCTIVE	R	P	DAL
RER60FR113&	0.113	5	F	INDUCTIVE	R	P	DAL
RER60FR115&	0.115	5	F	INDUCTIVE	R	P	DAL
	Resistance	Power	Resistance		Level 1	Level 2	
Part Number	Value (Ohms)	Rating (W)	Tolerance	Winding	(FRL)(&)	(FRL)(&)	Manufacturer
RER60FR118&	0.118	5	F	INDUCTIVE	R	P	DAL
RER60FR121&	0.121	5	F	INDUCTIVE	R	P	DAL
RER60FR124&	0.124	5	F	INDUCTIVE	R	P	DAL
RER60FR127&	0.127	5	F	INDUCTIVE	R	P	DAL
RER60FR130&	0.130	5	F	INDUCTIVE	R	P	DAL
RER60FR133&	0.133	5	F	INDUCTIVE	R	P	DAL
RER60FR137&	0.137	5	F	INDUCTIVE	R	P	DAL
	Resistance	Power	Resistance		Level 1	Level 2	
Part Number	Value (Ohms)	Rating (W)	Tolerance	Winding	(FRL)(&)	(FRL)(&)	Manufacturer
RER60FR140&	0.140	5	F	INDUCTIVE	R	P	DAL
RER60FR143&	0.143	5	F	INDUCTIVE	R	P	DAL
RER60FR147&	0.147	5	F	INDUCTIVE	R	P	DAL
RER60FR150&	0.150	5	F	INDUCTIVE	R	P	DAL
RER60FR154&	0.154	5	F	INDUCTIVE	R	P	DAL
RER60FR158&	0.158	5	F	INDUCTIVE	R	P	DAL
RER60FR162&	0.162	5	F	INDUCTIVE	R	P	DAL
	Resistance	Power	Resistance		Level 1	Level 2	
Part Number	Value (Ohms)	Rating (W)	Tolerance	Winding	(FRL)(&)	(FRL)(&)	Manufacturer
RER60FR165&	0.165	5	F	INDUCTIVE	R	P	DAL
RER60FR169&	0.169	5	F	INDUCTIVE	R	P	DAL
RER60FR174&	0.174	5	F	INDUCTIVE	R	P	DAL
RER60FR178&	0.178	5	F	INDUCTIVE	R	P	DAL
RER60FR182&	0.182	5	F	INDUCTIVE	R	P	DAL
RER60FR187&	0.187	5	F	INDUCTIVE	R	P	DAL
RER60FR191&	0.191	5	F	INDUCTIVE	R	P	DAL
	Resistance	Power	Resistance		Level 1	Level 2	
Part Number	Value (Ohms)	Rating (W)	Tolerance	Winding	(FRL)(&)	(FRL)(&)	Manufacturer
RER60FR196&	0.196	5	F	INDUCTIVE	R	P	DAL
RER60FR200&	0.200	5	F	INDUCTIVE	R	P	DAL
RER60FR205&	0.205	5	F	INDUCTIVE	R	P	DAL
RER60FR210&	0.210	5	F	INDUCTIVE	R	P	DAL
RER60FR215&	0.215	5	F	INDUCTIVE	R	P	DAL
RER60FR221&	0.221	5	F	INDUCTIVE	R	P	DAL
RER60FR226&	0.226	5	F	INDUCTIVE	R	P	DAL
	Resistance	Power	Resistance		Level 1	Level 2	
Part Number	Value (Ohms)	Rating (W)	Tolerance	Winding	(FRL)(&)	(FRL)(&)	Manufacturer
RER60FR232&	0.232	5	F	INDUCTIVE	R	P	DAL
RER60FR237&	0.237	5	F	INDUCTIVE	R	P	DAL

RER60FR243&	0.243	5	F	INDUCTIVE	R	P	DAL
RER60FR249&	0.249	5	F	INDUCTIVE	R	P	DAL
RER60FR255&	0.255	5	F	INDUCTIVE	R	P	DAL
RER60FR261&	0.261	5	F	INDUCTIVE	R	P	DAL
RER60FR267&	0.267	5	F	INDUCTIVE	R	P	DAL
	Resistance	Power	Resistance		Level 1	Level 2	
Part Number	Value (Ohms)	Rating (W)	Tolerance	Winding	(FRL)(&)	(FRL)(&)	Manufacturer
RER60FR274&	0.274	5	F	INDUCTIVE	R	P	DAL
RER60FR280&	0.280	5	F	INDUCTIVE	R	P	DAL
RER60FR287&	0.287	5	F	INDUCTIVE	R	P	DAL
RER60FR294&	0.294	5	F	INDUCTIVE	R	P	DAL
RER60FR301&	0.301	5	F	INDUCTIVE	R	P	DAL
RER60FR309&	0.309	5	F	INDUCTIVE	R	P	DAL
RER60FR316&	0.316	5	F	INDUCTIVE	R	P	DAL
	Resistance	Power	Resistance		Level 1	Level 2	
Part Number	Value (Ohms)	Rating (W)	Tolerance	Winding	(FRL)(&)	(FRL)(&)	Manufacturer
RER60FR324&	0.324	5	F	INDUCTIVE	R	P	DAL
RER60FR332&	0.332	5	F	INDUCTIVE	R	P	DAL
RER60FR340&	0.340	5	F	INDUCTIVE	R	P	DAL
RER60FR348&	0.348	5	F	INDUCTIVE	R	P	DAL
RER60FR357&	0.357	5	F	INDUCTIVE	R	P	DAL
RER60FR365&	0.365	5	F	INDUCTIVE	R	P	DAL
RER60FR374&	0.374	5	F	INDUCTIVE	R	P	DAL
	Resistance	Power	Resistance		Level 1	Level 2	
Part Number	Value (Ohms)	Rating (W)	Tolerance	Winding	(FRL)(&)	(FRL)(&)	Manufacturer
RER60FR383&	0.383	5	F	INDUCTIVE	R	P	DAL
RER60FR392&	0.392	5	F	INDUCTIVE	R	P	DAL
RER60FR402&	0.402	5	F	INDUCTIVE	R	P	DAL
RER60FR412&	0.412	5	F	INDUCTIVE	R	P	DAL
RER60FR422&	0.422	5	F	INDUCTIVE	R	P	DAL
RER60FR432&	0.432	5	F	INDUCTIVE	R	P	DAL
RER60FR442&	0.442	5	F	INDUCTIVE	R	P	DAL
	Resistance	Power	Resistance		Level 1	Level 2	
Part Number	Value (Ohms)	Rating (W)	Tolerance	Winding	(FRL)(&)	(FRL)(&)	Manufacturer
RER60FR453&	0.453	5	F	INDUCTIVE	R	P	DAL
RER60FR464&	0.464	5	F	INDUCTIVE	R	P	DAL
RER60FR475&	0.475	5	F	INDUCTIVE	R	P	DAL
RER60FR487&	0.487	5	F	INDUCTIVE	R	P	DAL
RER60FR499&	0.499	5	F	INDUCTIVE	R	P	DAL
RER60FR511&	0.511	5	F	INDUCTIVE	R	P	DAL
	Resistance	Power	Resistance		Level 1	Level 2	
Part Number	Value (Ohms)	Rating (W)	Tolerance	Winding	(FRL)(&)	(FRL)(&)	Manufacturer
RER60FR523&	0.523	5	F	INDUCTIVE	R	P	DAL
RER60FR536&	0.536	5	F	INDUCTIVE	R	P	DAL
RER60FR549&	0.549	5	F	INDUCTIVE	R	P	DAL
RER60FR562&	0.562	5	F	INDUCTIVE	R	P	DAL
RER60FR576&	0.576	5	F	INDUCTIVE	R	P	DAL

RER60FR590&	0.590	5	F	INDUCTIVE	R	P	DAL
RER60FR604&	0.604	5	F	INDUCTIVE	R	P	DAL
	Resistance	Power	Resistance		Level 1	Level 2	
Part Number	Value (Ohms)	Rating (W)	Tolerance	Winding	(FRL)(&)	(FRL)(&)	Manufacturer
RER60FR619&	0.619	5	F	INDUCTIVE	R	P	DAL
RER60FR634&	0.634	5	F	INDUCTIVE	R	P	DAL
RER60FR649&	0.649	5	F	INDUCTIVE	R	P	DAL
RER60FR665&	0.665	5	F	INDUCTIVE	R	P	DAL
RER60FR681&	0.681	5	F	INDUCTIVE	R	P	DAL
RER60FR698&	0.698	5	F	INDUCTIVE	R	P	DAL
RER60FR715&	0.715	5	F	INDUCTIVE	R	P	DAL
	Resistance	Power	Resistance		Level 1	Level 2	
Part Number	Value (Ohms)	Rating (W)	Tolerance	Winding	(FRL)(&)	(FRL)(&)	Manufacturer
RER60FR732&	0.732	5	F	INDUCTIVE	R	P	DAL
RER60FR750&	0.750	5	F	INDUCTIVE	R	P	DAL
RER60FR768&	0.768	5	F	INDUCTIVE	R	P	DAL
RER60FR787&	0.787	5	F	INDUCTIVE	R	P	DAL
RER60FR806&	0.806	5	F	INDUCTIVE	R	P	DAL
RER60FR825&	0.825	5	F	INDUCTIVE	R	P	DAL
RER60FR845&	0.845	5	F	INDUCTIVE	R	P	DAL
	Resistance	Power	Resistance		Level 1	Level 2	
Part Number	Value (Ohms)	Rating (W)	Tolerance	Winding	(FRL)(&)	(FRL)(&)	Manufacturer
RER60FR866&	0.866	5	F	INDUCTIVE	R	P	DAL
RER60FR887&	0.887	5	F	INDUCTIVE	R	P	DAL
RER60FR909&	0.909	5	F	INDUCTIVE	R	P	DAL
RER60FR931&	0.930	5	F	INDUCTIVE	R	P	DAL
RER60FR953&	0.953	5	F	INDUCTIVE	R	P	DAL
RER60FR976&	0.976	5	F	INDUCTIVE	R	P	DAL
	Resistance	Power	Resistance		Level 1	Level 2	
Part Number	Value (Ohms)	Rating (W)	Tolerance	Winding	(FRL)(&)	(FRL)(&)	Manufacturer

RER60 Wirewound Resistors: 1.00 Ohms through 9.76 Ohms

	Resistance	Power	Resistance		Level 1	Level 2	
Part Number	Value (Ohms)	Rating (W)	Tolerance	Winding	(FRL)(&)	(FRL)(&)	Manufacturer
RER60F1R00&	1.00	5	F	INDUCTIVE	R	P	DAL
RER60F1R02&	1.02	5	F	INDUCTIVE	R	P	DAL
RER60F1R05&	1.05	5	F	INDUCTIVE	R	P	DAL
RER60F1R07&	1.07	5	F	INDUCTIVE	R	P	DAL
RER60F1R10&	1.10	5	F	INDUCTIVE	R	P	DAL
RER60F1R13&	1.13	5	F	INDUCTIVE	R	P	DAL
RER60F1R15&	1.15	5	F	INDUCTIVE	R	P	DAL
	Resistance	Power	Resistance		Level 1	Level 2	
Part Number	Value (Ohms)	Rating (W)	Tolerance	Winding	(FRL)(&)	(FRL)(&)	Manufacturer
RER60F1R18&	1.18	5	F	INDUCTIVE	R	P	DAL

RER60F1R21&	1.21	5	F	INDUCTIVE	R	P	DAL
RER60F1R24&	1.24	5	F	INDUCTIVE	R	P	DAL
RER60F1R27&	1.27	5	F	INDUCTIVE	R	P	DAL
RER60F1R30&	1.30	5	F	INDUCTIVE	R	P	DAL
RER60F1R33&	1.33	5	F	INDUCTIVE	R	P	DAL
RER60F1R37&	1.37	5	F	INDUCTIVE	R	P	DAL
	Resistance	Power	Resistance		Level 1	Level 2	
Part Number	Value (Ohms)	Rating (W)	Tolerance	Winding	(FRL)(&)	(FRL)(&)	Manufacturer
RER60F1R40&	1.40	5	F	INDUCTIVE	R	P	DAL
RER60F1R43&	1.43	5	F	INDUCTIVE	R	P	DAL
RER60F1R47&	1.47	5	F	INDUCTIVE	R	P	DAL
RER60F1R50&	1.50	5	F	INDUCTIVE	R	P	DAL
RER60F1R54&	1.54	5	F	INDUCTIVE	R	P	DAL
RER60F1R58&	1.58	5	F	INDUCTIVE	R	P	DAL
RER60F1R62&	1.62	5	F	INDUCTIVE	R	P	DAL
	Resistance	Power	Resistance		Level 1	Level 2	
Part Number	Value (Ohms)	Rating (W)	Tolerance	Winding	(FRL)(&)	(FRL)(&)	Manufacturer
RER60F1R65&	1.65	5	F	INDUCTIVE	R	P	DAL
RER60F1R69&	1.69	5	F	INDUCTIVE	R	P	DAL
RER60F1R74&	1.74	5	F	INDUCTIVE	R	P	DAL
RER60F1R78&	1.78	5	F	INDUCTIVE	R	P	DAL
RER60F1R82&	1.82	5	F	INDUCTIVE	R	P	DAL
RER60F1R87&	1.87	5	F	INDUCTIVE	R	P	DAL
RER60F1R91&	1.91	5	F	INDUCTIVE	R	P	DAL
	Resistance	Power	Resistance		Level 1	Level 2	
Part Number	Value (Ohms)	Rating (W)	Tolerance	Winding	(FRL)(&)	(FRL)(&)	Manufacturer
RER60F1R96&	1.96	5	F	INDUCTIVE	R	P	DAL
RER60F2R00&	2.00	5	F	INDUCTIVE	R	P	DAL
RER60F2R05&	2.05	5	F	INDUCTIVE	R	P	DAL
RER60F2R10&	2.10	5	F	INDUCTIVE	R	P	DAL
RER60F2R15&	2.15	5	F	INDUCTIVE	R	P	DAL
RER60F2R21&	2.21	5	F	INDUCTIVE	R	P	DAL
RER60F2R26&	2.26	5	F	INDUCTIVE	R	P	DAL
	Resistance	Power	Resistance		Level 1	Level 2	
Part Number	Value (Ohms)	Rating (W)	Tolerance	Winding	(FRL)(&)	(FRL)(&)	Manufacturer
RER60F2R32&	2.32	5	F	INDUCTIVE	R	P	DAL
RER60F2R37&	2.37	5	F	INDUCTIVE	R	P	DAL
RER60F2R43&	2.43	5	F	INDUCTIVE	R	P	DAL
RER60F2R49&	2.49	5	F	INDUCTIVE	R	P	DAL
RER60F2R55&	2.55	5	F	INDUCTIVE	R	P	DAL
RER60F2R61&	2.61	5	F	INDUCTIVE	R	P	DAL
RER60F2R67&	2.67	5	F	INDUCTIVE	R	P	DAL
	Resistance	Power	Resistance		Level 1	Level 2	
Part Number	Value (Ohms)	Rating (W)	Tolerance	Winding	(FRL)(&)	(FRL)(&)	Manufacturer
RER60F2R74&	2.74	5	F	INDUCTIVE	R	P	DAL
RER60F2R80&	2.80	5	F	INDUCTIVE	R	P	DAL
RER60F2R87&	2.87	5	F	INDUCTIVE	R	P	DAL

RER60F2R94&	2.94	5	F	INDUCTIVE	R	P	DAL
RER60F3R01&	3.01	5	F	INDUCTIVE	R	P	DAL
RER60F3R09&	3.09	5	F	INDUCTIVE	R	P	DAL
RER60F3R16&	3.16	5	F	INDUCTIVE	R	P	DAL
	Resistance	Power	Resistance		Level 1	Level 2	
Part Number	Value (Ohms)	Rating (W)	Tolerance	Winding	(FRL)(&)	(FRL)(&)	Manufacturer
RER60F3R24&	3.24	5	F	INDUCTIVE	R	P	DAL
RER60F3R32&	3.32	5	F	INDUCTIVE	R	P	DAL
RER60F3R40&	3.40	5	F	INDUCTIVE	R	P	DAL
RER60F3R48&	3.48	5	F	INDUCTIVE	R	P	DAL
RER60F3R57&	3.57	5	F	INDUCTIVE	R	P	DAL
RER60F3R65&	3.65	5	F	INDUCTIVE	R	P	DAL
RER60F3R74&	3.74	5	F	INDUCTIVE	R	P	DAL
	Resistance	Power	Resistance		Level 1	Level 2	
Part Number	Value (Ohms)	Rating (W)	Tolerance	Winding	(FRL)(&)	(FRL)(&)	Manufacturer
RER60F3R83&	3.83	5	F	INDUCTIVE	R	P	DAL
RER60F3R92&	3.92	5	F	INDUCTIVE	R	P	DAL
RER60F4R02&	4.02	5	F	INDUCTIVE	R	P	DAL
RER60F4R12&	4.12	5	F	INDUCTIVE	R	P	DAL
RER60F4R22&	4.22	5	F	INDUCTIVE	R	P	DAL
RER60F4R32&	4.32	5	F	INDUCTIVE	R	P	DAL
RER60F4R42&	4.42	5	F	INDUCTIVE	R	P	DAL
	Resistance	Power	Resistance		Level 1	Level 2	
Part Number	Value (Ohms)	Rating (W)	Tolerance	Winding	(FRL)(&)	(FRL)(&)	Manufacturer
RER60F4R53&	4.53	5	F	INDUCTIVE	R	P	DAL
RER60F4R64&	4.64	5	F	INDUCTIVE	R	P	DAL
RER60F4R75&	4.75	5	F	INDUCTIVE	R	P	DAL
RER60F4R87&	4.87	5	F	INDUCTIVE	R	P	DAL
RER60F4R99&	4.99	5	F	INDUCTIVE	R	P	DAL
RER60F5R11&	5.11	5	F	INDUCTIVE	R	P	DAL
	Resistance	Power	Resistance		Level 1	Level 2	
Part Number	Value (Ohms)	Rating (W)	Tolerance	Winding	(FRL)(&)	(FRL)(&)	Manufacturer
RER60F5R23&	5.23	5	F	INDUCTIVE	R	P	DAL
RER60F5R36&	5.36	5	F	INDUCTIVE	R	P	DAL
RER60F5R49&	5.49	5	F	INDUCTIVE	R	P	DAL
RER60F5R62&	5.62	5	F	INDUCTIVE	R	P	DAL
RER60F5R76&	5.76	5	F	INDUCTIVE	R	P	DAL
RER60F5R90&	5.90	5	F	INDUCTIVE	R	P	DAL
RER60F6R04&	6.04	5	F	INDUCTIVE	R	P	DAL
	Resistance	Power	Resistance		Level 1	Level 2	
Part Number	Value (Ohms)	Rating (W)	Tolerance	Winding	(FRL)(&)	(FRL)(&)	Manufacturer
RER60F6R19&	6.19	5	F	INDUCTIVE	R	P	DAL
RER60F6R34&	6.34	5	F	INDUCTIVE	R	P	DAL
RER60F6R49&	6.49	5	F	INDUCTIVE	R	P	DAL
RER60F6R65&	6.65	5	F	INDUCTIVE	R	P	DAL
RER60F6R81&	6.81	5	F	INDUCTIVE	R	P	DAL
RER60F6R98&	6.98	5	F	INDUCTIVE	R	P	DAL

RER60F7R15&	7.15	5	F	INDUCTIVE	R	P	DAL
	Resistance	Power	Resistance		Level 1	Level 2	
Part Number	Value (Ohms)	Rating (W)	Tolerance	Winding	(FRL)(&)	(FRL)(&)	Manufacturer
RER60F7R32&	7.32	5	F	INDUCTIVE	R	P	DAL
RER60F7R50&	7.50	5	F	INDUCTIVE	R	P	DAL
RER60F7R68&	7.68	5	F	INDUCTIVE	R	P	DAL
RER60F7R87&	7.87	5	F	INDUCTIVE	R	P	DAL
RER60F8R06&	8.06	5	F	INDUCTIVE	R	P	DAL
RER60F8R25&	8.25	5	F	INDUCTIVE	R	P	DAL
RER60F8R45&	8.45	5	F	INDUCTIVE	R	P	DAL
RER60F8R66&	8.66	5	F	INDUCTIVE	R	P	DAL
RER60F8R87&	8.87	5	F	INDUCTIVE	R	P	DAL
RER60F9R09&	9.09	5	F	INDUCTIVE	R	P	DAL
RER60F9R31&	9.31	5	F	INDUCTIVE	R	P	DAL
RER60F9R53&	9.53	5	F	INDUCTIVE	R	P	DAL
RER60F9R76&	9.76	5	F	INDUCTIVE	R	P	DAL
	Resistance	Power	Resistance		Level 1	Level 2	
Part Number	Value (Ohms)	Rating (W)	Tolerance	Winding	(FRL)(&)	(FRL)(&)	Manufacturer

RER60 Wirewound Resistors: 10.0 Ohms through 97.6 Ohms

	Resistance	Power	Resistance		Level 1	Level 2	
Part Number	Value (Ohms)	Rating (W)	Tolerance	Winding	(FRL)(&)	(FRL)(&)	Manufacturer
RER60F10R0&	10.0	5	F	INDUCTIVE	R	P	DAL
RER60F10R2&	10.2	5	F	INDUCTIVE	R	P	DAL
RER60F10R5&	10.5	5	F	INDUCTIVE	R	P	DAL
RER60F10R7&	10.7	5	F	INDUCTIVE	R	P	DAL
RER60F11R0&	11.0	5	F	INDUCTIVE	R	P	DAL
RER60F11R3&	11.3	5	F	INDUCTIVE	R	P	DAL
RER60F11R5&	11.5	5	F	INDUCTIVE	R	P	DAL
	Resistance	Power	Resistance		Level 1	Level 2	
Part Number	Value (Ohms)	Rating (W)	Tolerance	Winding	(FRL)(&)	(FRL)(&)	Manufacturer
RER60F11R8&	11.8	5	F	INDUCTIVE	R	P	DAL
RER60F12R1&	12.1	5	F	INDUCTIVE	R	P	DAL
RER60F12R4&	12.4	5	F	INDUCTIVE	R	P	DAL
RER60F12R7&	12.7	5	F	INDUCTIVE	R	P	DAL
RER60F13R0&	13.0	5	F	INDUCTIVE	R	P	DAL
RER60F13R3&	13.3	5	F	INDUCTIVE	R	P	DAL
RER60F13R7&	13.7	5	F	INDUCTIVE	R	P	DAL
	Resistance	Power	Resistance		Level 1	Level 2	
Part Number	Value (Ohms)	Rating (W)	Tolerance	Winding	(FRL)(&)	(FRL)(&)	Manufacturer
RER60F14R0&	14.0	5	F	INDUCTIVE	R	P	DAL
RER60F14R3&	14.3	5	F	INDUCTIVE	R	P	DAL
RER60F14R7&	14.7	5	F	INDUCTIVE	R	P	DAL
RER60F15R0&	15.0	5	F	INDUCTIVE	R	P	DAL

RER60F15R4&	15.4	5	F	INDUCTIVE	R	P	DAL
RER60F15R8&	15.8	5	F	INDUCTIVE	R	P	DAL
RER60F16R2&	16.2	5	F	INDUCTIVE	R	P	DAL
	Resistance	Power	Resistance		Level 1	Level 2	
Part Number	Value (Ohms)	Rating (W)	Tolerance	Winding	(FRL)(&)	(FRL)(&)	Manufacturer
RER60F16R5&	16.5	5	F	INDUCTIVE	R	P	DAL
RER60F16R9&	16.9	5	F	INDUCTIVE	R	P	DAL
RER60F17R4&	17.4	5	F	INDUCTIVE	R	P	DAL
RER60F17R8&	17.8	5	F	INDUCTIVE	R	P	DAL
RER60F18R2&	18.2	5	F	INDUCTIVE	R	P	DAL
RER60F18R7&	18.7	5	F	INDUCTIVE	R	P	DAL
RER60F19R1&	19.1	5	F	INDUCTIVE	R	P	DAL
	Resistance	Power	Resistance		Level 1	Level 2	
Part Number	Value (Ohms)	Rating (W)	Tolerance	Winding	(FRL)(&)	(FRL)(&)	Manufacturer
RER60F19R6&	19.6	5	F	INDUCTIVE	R	P	DAL
RER60F20R0&	20.0	5	F	INDUCTIVE	R	P	DAL
RER60F20R5&	20.5	5	F	INDUCTIVE	R	P	DAL
RER60F21R0&	21.0	5	F	INDUCTIVE	R	P	DAL
RER60F21R5&	21.5	5	F	INDUCTIVE	R	P	DAL
RER60F22R1&	22.1	5	F	INDUCTIVE	R	P	DAL
RER60F22R6&	22.6	5	F	INDUCTIVE	R	P	DAL
	Resistance	Power	Resistance		Level 1	Level 2	
Part Number	Value (Ohms)	Rating (W)	Tolerance	Winding	(FRL)(&)	(FRL)(&)	Manufacturer
RER60F23R2&	23.2	5	F	INDUCTIVE	R	P	DAL
RER60F23R7&	23.7	5	F	INDUCTIVE	R	P	DAL
RER60F24R3&	24.3	5	F	INDUCTIVE	R	P	DAL
RER60F24R9&	24.9	5	F	INDUCTIVE	R	P	DAL
RER60F25R5&	25.5	5	F	INDUCTIVE	R	P	DAL
RER60F26R1&	26.1	5	F	INDUCTIVE	R	P	DAL
RER60F26R7&	26.7	5	F	INDUCTIVE	R	P	DAL
	Resistance	Power	Resistance		Level 1	Level 2	
Part Number	Value (Ohms)	Rating (W)	Tolerance	Winding	(FRL)(&)	(FRL)(&)	Manufacturer
RER60F27R4&	27.4	5	F	INDUCTIVE	R	P	DAL
RER60F28R0&	28.0	5	F	INDUCTIVE	R	P	DAL
RER60F28R7&	28.7	5	F	INDUCTIVE	R	P	DAL
RER60F29R4&	29.4	5	F	INDUCTIVE	R	P	DAL
RER60F30R1&	30.1	5	F	INDUCTIVE	R	P	DAL
RER60F30R9&	30.9	5	F	INDUCTIVE	R	P	DAL
RER60F31R6&	31.6	5	F	INDUCTIVE	R	P	DAL
	Resistance	Power	Resistance		Level 1	Level 2	
Part Number	Value (Ohms)	Rating (W)	Tolerance	Winding	(FRL)(&)	(FRL)(&)	Manufacturer
RER60F32R4&	32.4	5	F	INDUCTIVE	R	P	DAL
RER60F33R2&	33.2	5	F	INDUCTIVE	R	P	DAL
RER60F34R0&	34.0	5	F	INDUCTIVE	R	P	DAL
RER60F34R8&	34.8	5	F	INDUCTIVE	R	P	DAL
RER60F35R7&	35.7	5	F	INDUCTIVE	R	P	DAL
RER60F36R5&	36.5	5	F	INDUCTIVE	R	P	DAL

RER60F37R4&	37.4	5	F	INDUCTIVE	R	P	DAL
	Resistance	Power	Resistance		Level 1	Level 2	
Part Number	Value (Ohms)	Rating (W)	Tolerance	Winding	(FRL)(&)	(FRL)(&)	Manufacturer
RER60F38R3&	38.3	5	F	INDUCTIVE	R	P	DAL
RER60F39R2&	39.2	5	F	INDUCTIVE	R	P	DAL
RER60F40R2&	40.2	5	F	INDUCTIVE	R	P	DAL
RER60F41R2&	41.2	5	F	INDUCTIVE	R	P	DAL
RER60F42R2&	42.2	5	F	INDUCTIVE	R	P	DAL
RER60F43R2&	43.2	5	F	INDUCTIVE	R	P	DAL
RER60F44R2&	44.2	5	F	INDUCTIVE	R	P	DAL
	Resistance	Power	Resistance		Level 1	Level 2	
Part Number	Value (Ohms)	Rating (W)	Tolerance	Winding	(FRL)(&)	(FRL)(&)	Manufacturer
RER60F45R3&	45.3	5	F	INDUCTIVE	R	P	DAL
RER60F46R4&	46.4	5	F	INDUCTIVE	R	P	DAL
RER60F47R5&	47.5	5	F	INDUCTIVE	R	P	DAL
RER60F48R7&	48.7	5	F	INDUCTIVE	R	P	DAL
RER60F49R9&	49.9	5	F	INDUCTIVE	R	P	DAL
RER60F51R1&	51.1	5	F	INDUCTIVE	R	P	DAL
	Resistance	Power	Resistance		Level 1	Level 2	
Part Number	Value (Ohms)	Rating (W)	Tolerance	Winding	(FRL)(&)	(FRL)(&)	Manufacturer
RER60F52R3&	52.3	5	F	INDUCTIVE	R	P	DAL
RER60F53R6&	53.6	5	F	INDUCTIVE	R	P	DAL
RER60F54R9&	54.9	5	F	INDUCTIVE	R	P	DAL
RER60F56R2&	56.2	5	F	INDUCTIVE	R	P	DAL
RER60F57R6&	57.6	5	F	INDUCTIVE	R	P	DAL
RER60F59R0&	59.0	5	F	INDUCTIVE	R	P	DAL
RER60F60R4&	60.4	5	F	INDUCTIVE	R	P	DAL
	Resistance	Power	Resistance		Level 1	Level 2	
Part Number	Value (Ohms)	Rating (W)	Tolerance	Winding	(FRL)(&)	(FRL)(&)	Manufacturer
RER60F61R9&	61.9	5	F	INDUCTIVE	R	P	DAL
RER60F63R4&	63.4	5	F	INDUCTIVE	R	P	DAL
RER60F64R9&	64.9	5	F	INDUCTIVE	R	P	DAL
RER60F66R5&	66.5	5	F	INDUCTIVE	R	P	DAL
RER60F68R1&	68.1	5	F	INDUCTIVE	R	P	DAL
RER60F69R8&	69.8	5	F	INDUCTIVE	R	P	DAL
RER60F71R5&	71.5	5	F	INDUCTIVE	R	P	DAL
	Resistance	Power	Resistance		Level 1	Level 2	
Part Number	Value (Ohms)	Rating (W)	Tolerance	Winding	(FRL)(&)	(FRL)(&)	Manufacturer
RER60F73R2&	73.2	5	F	INDUCTIVE	R	P	DAL
RER60F75R0&	75.0	5	F	INDUCTIVE	R	P	DAL
RER60F76R8&	76.8	5	F	INDUCTIVE	R	P	DAL
RER60F78R7&	78.7	5	F	INDUCTIVE	R	P	DAL
RER60F80R6&	80.6	5	F	INDUCTIVE	R	P	DAL
RER60F82R5&	82.5	5	F	INDUCTIVE	R	P	DAL
RER60F84R5&	84.5	5	F	INDUCTIVE	R	P	DAL
RER60F86R6&	86.6	5	F	INDUCTIVE	R	P	DAL
RER60F88R7&	88.7	5	F	INDUCTIVE	R	P	DAL

RER60F90R9&	90.9	5	F	INDUCTIVE	R	P	DAL
RER60F93R1&	93.1	5	F	INDUCTIVE	R	P	DAL
RER60F95R3&	95.3	5	F	INDUCTIVE	R	P	DAL
RER60F97R6&	97.6	5	F	INDUCTIVE	R	P	DAL
	Resistance	Power	Resistance		Level 1	Level 2	
Part Number	Value (Ohms)	Rating (W)	Tolerance	Winding	(FRL)(&)	(FRL)(&)	Manufacturer

RER60 Wirewound Resistors: 100 Ohms through 976 Ohms

	Resistance	Power	Resistance		Level 1	Level 2	
Part Number	Value (Ohms)	Rating (W)	Tolerance	Winding	(FRL)(&)	(FRL)(&)	Manufacturer
RER60F100R&	100	5	F	INDUCTIVE	R	P	DAL
RER60F102R&	102	5	F	INDUCTIVE	R	P	DAL
RER60F105R&	105	5	F	INDUCTIVE	R	P	DAL
RER60F107R&	107	5	F	INDUCTIVE	R	P	DAL
RER60F110R&	110	5	F	INDUCTIVE	R	P	DAL
RER60F113R&	113	5	F	INDUCTIVE	R	P	DAL
RER60F115R&	115	5	F	INDUCTIVE	R	P	DAL
	Resistance	Power	Resistance		Level 1	Level 2	
Part Number	Value (Ohms)	Rating (W)	Tolerance	Winding	(FRL)(&)	(FRL)(&)	Manufacturer
RER60F118R&	118	5	F	INDUCTIVE	R	P	DAL
RER60F121R&	121	5	F	INDUCTIVE	R	P	DAL
RER60F124R&	124	5	F	INDUCTIVE	R	P	DAL
RER60F127R&	127	5	F	INDUCTIVE	R	P	DAL
RER60F130R&	130	5	F	INDUCTIVE	R	P	DAL
RER60F133R&	133	5	F	INDUCTIVE	R	P	DAL
RER60F137R&	137	5	F	INDUCTIVE	R	P	DAL
	Resistance	Power	Resistance		Level 1	Level 2	
Part Number	Value (Ohms)	Rating (W)	Tolerance	Winding	(FRL)(&)	(FRL)(&)	Manufacturer
RER60F140R&	140	5	F	INDUCTIVE	R	P	DAL
RER60F143R&	143	5	F	INDUCTIVE	R	P	DAL
RER60F147R&	147	5	F	INDUCTIVE	R	P	DAL
RER60F150R&	150	5	F	INDUCTIVE	R	P	DAL
RER60F154R&	154	5	F	INDUCTIVE	R	P	DAL
RER60F158R&	158	5	F	INDUCTIVE	R	P	DAL
RER60F162R&	162	5	F	INDUCTIVE	R	P	DAL
	Resistance	Power	Resistance		Level 1	Level 2	
Part Number	Value (Ohms)	Rating (W)	Tolerance	Winding	(FRL)(&)	(FRL)(&)	Manufacturer
RER60F165R&	165	5	F	INDUCTIVE	R	P	DAL
RER60F169R&	169	5	F	INDUCTIVE	R	P	DAL
RER60F174R&	174	5	F	INDUCTIVE	R	P	DAL
RER60F178R&	178	5	F	INDUCTIVE	R	P	DAL
RER60F182R&	182	5	F	INDUCTIVE	R	P	DAL
RER60F187R&	187	5	F	INDUCTIVE	R	P	DAL
RER60F191R&	191	5	F	INDUCTIVE	R	P	DAL

	Resistance	Power	Resistance		Level 1	Level 2	
Part Number	Value (Ohms)	Rating (W)	Tolerance	Winding	(FRL)(&)	(FRL)(&)	Manufacturer
RER60F196R&	196	5	F	INDUCTIVE	R	P	DAL
RER60F200R&	200	5	F	INDUCTIVE	R	P	DAL
RER60F205R&	205	5	F	INDUCTIVE	R	P	DAL
RER60F210R&	210	5	F	INDUCTIVE	R	P	DAL
RER60F215R&	215	5	F	INDUCTIVE	R	P	DAL
RER60F221R&	221	5	F	INDUCTIVE	R	P	DAL
RER60F226R&	226	5	F	INDUCTIVE	R	P	DAL
	Resistance	Power	Resistance		Level 1	Level 2	
Part Number	Value (Ohms)	Rating (W)	Tolerance	Winding	(FRL)(&)	(FRL)(&)	Manufacturer
RER60F232R&	232	5	F	INDUCTIVE	R	P	DAL
RER60F237R&	237	5	F	INDUCTIVE	R	P	DAL
RER60F243R&	243	5	F	INDUCTIVE	R	P	DAL
RER60F249R&	249	5	F	INDUCTIVE	R	P	DAL
RER60F255R&	255	5	F	INDUCTIVE	R	P	DAL
RER60F261R&	261	5	F	INDUCTIVE	R	P	DAL
RER60F267R&	267	5	F	INDUCTIVE	R	P	DAL
	Resistance	Power	Resistance		Level 1	Level 2	
Part Number	Value (Ohms)	Rating (W)	Tolerance	Winding	(FRL)(&)	(FRL)(&)	Manufacturer
RER60F274R&	274	5	F	INDUCTIVE	R	P	DAL
RER60F280R&	280	5	F	INDUCTIVE	R	P	DAL
RER60F287R&	287	5	F	INDUCTIVE	R	P	DAL
RER60F294R&	294	5	F	INDUCTIVE	R	P	DAL
RER60F301R&	301	5	F	INDUCTIVE	R	P	DAL
RER60F309R&	309	5	F	INDUCTIVE	R	P	DAL
RER60F316R&	316	5	F	INDUCTIVE	R	P	DAL
	Resistance	Power	Resistance		Level 1	Level 2	
Part Number	Value (Ohms)	Rating (W)	Tolerance	Winding	(FRL)(&)	(FRL)(&)	Manufacturer
RER60F324R&	324	5	F	INDUCTIVE	R	P	DAL
RER60F332R&	332	5	F	INDUCTIVE	R	P	DAL
RER60F340R&	340	5	F	INDUCTIVE	R	P	DAL
RER60F348R&	348	5	F	INDUCTIVE	R	P	DAL
RER60F357R&	357	5	F	INDUCTIVE	R	P	DAL
RER60F365R&	365	5	F	INDUCTIVE	R	P	DAL
RER60F374R&	374	5	F	INDUCTIVE	R	P	DAL
	Resistance	Power	Resistance		Level 1	Level 2	
Part Number	Value (Ohms)	Rating (W)	Tolerance	Winding	(FRL)(&)	(FRL)(&)	Manufacturer
RER60F383R&	383	5	F	INDUCTIVE	R	P	DAL
RER60F392R&	392	5	F	INDUCTIVE	R	P	DAL
RER60F402R&	402	5	F	INDUCTIVE	R	P	DAL
RER60F412R&	412	5	F	INDUCTIVE	R	P	DAL
RER60F422R&	422	5	F	INDUCTIVE	R	P	DAL
RER60F432R&	432	5	F	INDUCTIVE	R	P	DAL
RER60F442R&	442	5	F	INDUCTIVE	R	P	DAL
	Resistance	Power	Resistance		Level 1	Level 2	
Part Number	Value (Ohms)	Rating (W)	Tolerance	Winding	(FRL)(&)	(FRL)(&)	Manufacturer

RER60F453R&	453	5	F	INDUCTIVE	R	P	DAL
RER60F464R&	464	5	F	INDUCTIVE	R	P	DAL
RER60F475R&	475	5	F	INDUCTIVE	R	P	DAL
RER60F487R&	487	5	F	INDUCTIVE	R	P	DAL
RER60F499R&	499	5	F	INDUCTIVE	R	P	DAL
RER60F511R&	511	5	F	INDUCTIVE	R	P	DAL
	Resistance	Power	Resistance		Level 1	Level 2	
Part Number	Value (Ohms)	Rating (W)	Tolerance	Winding	(FRL)(&)	(FRL)(&)	Manufacturer
RER60F523R&	523	5	F	INDUCTIVE	R	P	DAL
RER60F536R&	536	5	F	INDUCTIVE	R	P	DAL
RER60F549R&	549	5	F	INDUCTIVE	R	P	DAL
RER60F562R&	562	5	F	INDUCTIVE	R	P	DAL
RER60F576R&	576	5	F	INDUCTIVE	R	P	DAL
RER60F590R&	590	5	F	INDUCTIVE	R	P	DAL
RER60F604R&	604	5	F	INDUCTIVE	R	P	DAL
	Resistance	Power	Resistance		Level 1	Level 2	
Part Number	Value (Ohms)	Rating (W)	Tolerance	Winding	(FRL)(&)	(FRL)(&)	Manufacturer
RER60F619R&	619	5	F	INDUCTIVE	R	P	DAL
RER60F634R&	634	5	F	INDUCTIVE	R	P	DAL
RER60F649R&	649	5	F	INDUCTIVE	R	P	DAL
RER60F665R&	665	5	F	INDUCTIVE	R	P	DAL
RER60F681R&	681	5	F	INDUCTIVE	R	P	DAL
RER60F698R&	698	5	F	INDUCTIVE	R	P	DAL
RER60F715R&	715	5	F	INDUCTIVE	R	P	DAL
	Resistance	Power	Resistance		Level 1	Level 2	
Part Number	Value (Ohms)	Rating (W)	Tolerance	Winding	(FRL)(&)	(FRL)(&)	Manufacturer
RER60F732R&	732	5	F	INDUCTIVE	R	P	DAL
RER60F750R&	750	5	F	INDUCTIVE	R	P	DAL
RER60F768R&	768	5	F	INDUCTIVE	R	P	DAL
RER60F787R&	787	5	F	INDUCTIVE	R	P	DAL
RER60F806R&	806	5	F	INDUCTIVE	R	P	DAL
RER60F825R&	825	5	F	INDUCTIVE	R	P	DAL
RER60F845R&	845	5	F	INDUCTIVE	R	P	DAL
RER60F866R&	866	5	F	INDUCTIVE	R	P	DAL
RER60F887R&	887	5	F	INDUCTIVE	R	P	DAL
RER60F909R&	909	5	F	INDUCTIVE	R	P	DAL
RER60F931R&	931	5	F	INDUCTIVE	R	P	DAL
RER60F953R&	953	5	F	INDUCTIVE	R	P	DAL
RER60F976R&	976	5	F	INDUCTIVE	R	P	DAL
	Resistance	Power	Resistance		Level 1	Level 2	
Part Number	Value (Ohms)	Rating (W)	Tolerance	Winding	(FRL)(&)	(FRL)(&)	Manufacturer

RER60 Wirewound Resistors: 1000 Ohms through 3320 Ohms

	Resistance	Power	Resistance		Level 1	Level 2	

Part Number	Value (Ohms)	Rating (W)	Tolerance	Winding	(FRL)(&)	(FRL)(&)	Manufacturer
RER60F1001&	1,000	5	F	INDUCTIVE	R	P	DAL
RER60F1021&	1,020	5	F	INDUCTIVE	R	P	DAL
RER60F1051&	1,050	5	F	INDUCTIVE	R	P	DAL
RER60F1071&	1,070	5	F	INDUCTIVE	R	P	DAL
RER60F1101&	1,100	5	F	INDUCTIVE	R	P	DAL
RER60F1131&	1,130	5	F	INDUCTIVE	R	P	DAL
RER60F1151&	1,150	5	F	INDUCTIVE	R	P	DAL
	Resistance	Power	Resistance		Level 1	Level 2	
Part Number	Value (Ohms)	Rating (W)	Tolerance	Winding	(FRL)(&)	(FRL)(&)	Manufacturer
RER60F1181&	1,180	5	F	INDUCTIVE	R	P	DAL
RER60F1211&	1,210	5	F	INDUCTIVE	R	P	DAL
RER60F1241&	1,240	5	F	INDUCTIVE	R	P	DAL
RER60F1271&	1,270	5	F	INDUCTIVE	R	P	DAL
RER60F1301&	1,300	5	F	INDUCTIVE	R	P	DAL
RER60F1331&	1,330	5	F	INDUCTIVE	R	P	DAL
RER60F1371&	1,370	5	F	INDUCTIVE	R	P	DAL
	Resistance	Power	Resistance		Level 1	Level 2	
Part Number	Value (Ohms)	Rating (W)	Tolerance	Winding	(FRL)(&)	(FRL)(&)	Manufacturer
RER60F1401&	1,400	5	F	INDUCTIVE	R	P	DAL
RER60F1431&	1,430	5	F	INDUCTIVE	R	P	DAL
RER60F1471&	1,470	5	F	INDUCTIVE	R	P	DAL
RER60F1501&	1,500	5	F	INDUCTIVE	R	P	DAL
RER60F1541&	1,540	5	F	INDUCTIVE	R	P	DAL
RER60F1581&	1,580	5	F	INDUCTIVE	R	P	DAL
RER60F1621&	1,620	5	F	INDUCTIVE	R	P	DAL
	Resistance	Power	Resistance		Level 1	Level 2	
Part Number	Value (Ohms)	Rating (W)	Tolerance	Winding	(FRL)(&)	(FRL)(&)	Manufacturer
RER60F1651&	1,650	5	F	INDUCTIVE	R	P	DAL
RER60F1691&	1,690	5	F	INDUCTIVE	R	P	DAL
RER60F1741&	1,740	5	F	INDUCTIVE	R	P	DAL
RER60F1781&	1,780	5	F	INDUCTIVE	R	P	DAL
RER60F1821&	1,820	5	F	INDUCTIVE	R	P	DAL
RER60F1871&	1,870	5	F	INDUCTIVE	R	P	DAL
RER60F1911&	1,910	5	F	INDUCTIVE	R	P	DAL
	Resistance	Power	Resistance		Level 1	Level 2	
Part Number	Value (Ohms)	Rating (W)	Tolerance	Winding	(FRL)(&)	(FRL)(&)	Manufacturer
RER60F1961&	1,960	5	F	INDUCTIVE	R	P	DAL
RER60F2001&	2,000	5	F	INDUCTIVE	R	P	DAL
RER60F2051&	2,050	5	F	INDUCTIVE	R	P	DAL
RER60F2101&	2,100	5	F	INDUCTIVE	R	P	DAL
RER60F2151&	2,150	5	F	INDUCTIVE	R	P	DAL
RER60F2211&	2,210	5	F	INDUCTIVE	R	P	DAL
RER60F2261&	2,260	5	F	INDUCTIVE	R	P	DAL
	Resistance	Power	Resistance		Level 1	Level 2	
Part Number	Value (Ohms)	Rating (W)	Tolerance	Winding	(FRL)(&)	(FRL)(&)	Manufacturer
RER60F2321&	2,320	5	F	INDUCTIVE	R	P	DAL

RER60F2371&	2,370	5	F	INDUCTIVE	R	P	DAL
RER60F2431&	2,430	5	F	INDUCTIVE	R	P	DAL
RER60F2491&	2,490	5	F	INDUCTIVE	R	P	DAL
RER60F2551&	2,550	5	F	INDUCTIVE	R	P	DAL
RER60F2611&	2,610	5	F	INDUCTIVE	R	P	DAL
RER60F2671&	2,670	5	F	INDUCTIVE	R	P	DAL
	Resistance	Power	Resistance		Level 1	Level 2	
Part Number	Value (Ohms)	Rating (W)	Tolerance	Winding	(FRL)(&)	(FRL)(&)	Manufacturer
RER60F2741&	2,740	5	F	INDUCTIVE	R	P	DAL
RER60F2801&	2,800	5	F	INDUCTIVE	R	P	DAL
RER60F2871&	2,870	5	F	INDUCTIVE	R	P	DAL
RER60F2941&	2,940	5	F	INDUCTIVE	R	P	DAL
RER60F3011&	3,010	5	F	INDUCTIVE	R	P	DAL
RER60F3091&	3,090	5	F	INDUCTIVE	R	P	DAL
RER60F3161&	3,160	5	F	INDUCTIVE	R	P	DAL
RER60F3241&	3,240	5	F	INDUCTIVE	R	P	DAL
RER60F3321&	3,320	5	F	INDUCTIVE	R	P	DAL
	Resistance	Power	Resistance		Level 1	Level 2	
Part Number	Value (Ohms)	Rating (W)	Tolerance	Winding	(FRL)(&)	(FRL)(&)	Manufacturer

RER65 Wirewound Resistors

	Resistance	Power	Resistance		Level 1	Level 2	
Part Number	Value (Ohms)	Rating (W)	Tolerance	Winding	(FRL)(&)	(FRL)(&)	Manufacturer
RER65FR100&	0.100	10	F	INDUCTIVE	R	P	DAL
RER65FR102&	0.102	10	F	INDUCTIVE	R	P	DAL
RER65FR105&	0.105	10	F	INDUCTIVE	R	P	DAL
RER65FR107&	0.107	10	F	INDUCTIVE	R	P	DAL
RER65FR110&	0.110	10	F	INDUCTIVE	R	P	DAL
RER65FR113&	0.113	10	F	INDUCTIVE	R	P	DAL
RER65FR115&	0.115	10	F	INDUCTIVE	R	P	DAL
RER65FR118&	0.118	10	F	INDUCTIVE	R	P	DAL
RER65FR121&	0.121	10	F	INDUCTIVE	R	P	DAL
RER65FR124&	0.124	10	F	INDUCTIVE	R	P	DAL
RER65FR127&	0.127	10	F	INDUCTIVE	R	P	DAL
RER65FR130&	0.130	10	F	INDUCTIVE	R	P	DAL
RER65FR133&	0.133	10	F	INDUCTIVE	R	P	DAL
RER65FR137&	0.137	10	F	INDUCTIVE	R	P	DAL
RER65FR140&	0.140	10	F	INDUCTIVE	R	P	DAL
RER65FR143&	0.143	10	F	INDUCTIVE	R	P	DAL
RER65FR147&	0.147	10	F	INDUCTIVE	R	P	DAL
RER65FR150&	0.150	10	F	INDUCTIVE	R	P	DAL
RER65FR154&	0.154	10	F	INDUCTIVE	R	P	DAL
RER65FR158&	0.158	10	F	INDUCTIVE	R	P	DAL
RER65FR162&	0.162	10	F	INDUCTIVE	R	P	DAL

RER65FR165&	0.165	10	F	INDUCTIVE	R	P	DAL
RER65FR169&	0.169	10	F	INDUCTIVE	R	P	DAL
RER65FR174&	0.174	10	F	INDUCTIVE	R	P	DAL
RER65FR178&	0.178	10	F	INDUCTIVE	R	P	DAL
RER65FR182&	0.182	10	F	INDUCTIVE	R	P	DAL
RER65FR187&	0.187	10	F	INDUCTIVE	R	P	DAL
RER65FR191&	0.191	10	F	INDUCTIVE	R	P	DAL
RER65FR196&	0.196	10	F	INDUCTIVE	R	P	DAL
RER65FR200&	0.200	10	F	INDUCTIVE	R	P	DAL
RER65FR205&	0.205	10	F	INDUCTIVE	R	P	DAL
RER65FR210&	0.210	10	F	INDUCTIVE	R	P	DAL
RER65FR215&	0.215	10	F	INDUCTIVE	R	P	DAL
RER65FR221&	0.221	10	F	INDUCTIVE	R	P	DAL
RER65FR226&	0.226	10	F	INDUCTIVE	R	P	DAL
RER65FR232&	0.232	10	F	INDUCTIVE	R	P	DAL
RER65FR237&	0.237	10	F	INDUCTIVE	R	P	DAL
RER65FR243&	0.243	10	F	INDUCTIVE	R	P	DAL
RER65FR249&	0.249	10	F	INDUCTIVE	R	P	DAL
RER65FR255&	0.255	10	F	INDUCTIVE	R	P	DAL
RER65FR261&	0.261	10	F	INDUCTIVE	R	P	DAL
RER65FR267&	0.267	10	F	INDUCTIVE	R	P	DAL
RER65FR274&	0.274	10	F	INDUCTIVE	R	P	DAL
RER65FR280&	0.280	10	F	INDUCTIVE	R	P	DAL
RER65FR287&	0.287	10	F	INDUCTIVE	R	P	DAL
RER65FR294&	0.294	10	F	INDUCTIVE	R	P	DAL
RER65FR301&	0.301	10	F	INDUCTIVE	R	P	DAL
RER65FR309&	0.309	10	F	INDUCTIVE	R	P	DAL
RER65FR316&	0.316	10	F	INDUCTIVE	R	P	DAL
RER65FR324&	0.324	10	F	INDUCTIVE	R	P	DAL
RER65FR332&	0.332	10	F	INDUCTIVE	R	P	DAL
RER65FR340&	0.340	10	F	INDUCTIVE	R	P	DAL
RER65FR348&	0.348	10	F	INDUCTIVE	R	P	DAL
RER65FR357&	0.357	10	F	INDUCTIVE	R	P	DAL
RER65FR365&	0.365	10	F	INDUCTIVE	R	P	DAL
RER65FR374&	0.374	10	F	INDUCTIVE	R	P	DAL
RER65FR383&	0.383	10	F	INDUCTIVE	R	P	DAL
RER65FR392&	0.392	10	F	INDUCTIVE	R	P	DAL
RER65FR402&	0.402	10	F	INDUCTIVE	R	P	DAL
RER65FR412&	0.412	10	F	INDUCTIVE	R	P	DAL
RER65FR422&	0.422	10	F	INDUCTIVE	R	P	DAL
RER65FR432&	0.432	10	F	INDUCTIVE	R	P	DAL
RER65FR442&	0.442	10	F	INDUCTIVE	R	P	DAL
RER65FR453&	0.453	10	F	INDUCTIVE	R	P	DAL
RER65FR464&	0.464	10	F	INDUCTIVE	R	P	DAL
RER65FR475&	0.475	10	F	INDUCTIVE	R	P	DAL
RER65FR487&	0.487	10	F	INDUCTIVE	R	P	DAL
RER65FR499&	0.499	10	F	INDUCTIVE	R	P	DAL

RER65FR511&	0.511	10	F	INDUCTIVE	R	P	DAL
RER65FR523&	0.523	10	F	INDUCTIVE	R	P	DAL
RER65FR536&	0.536	10	F	INDUCTIVE	R	P	DAL
RER65FR549&	0.549	10	F	INDUCTIVE	R	P	DAL
RER65FR562&	0.562	10	F	INDUCTIVE	R	P	DAL
RER65FR576&	0.576	10	F	INDUCTIVE	R	P	DAL
RER65FR590&	0.590	10	F	INDUCTIVE	R	P	DAL
RER65FR604&	0.604	10	F	INDUCTIVE	R	P	DAL
RER65FR619&	0.619	10	F	INDUCTIVE	R	P	DAL
RER65FR634&	0.634	10	F	INDUCTIVE	R	P	DAL
RER65FR649&	0.649	10	F	INDUCTIVE	R	P	DAL
RER65FR665&	0.665	10	F	INDUCTIVE	R	P	DAL
RER65FR681&	0.681	10	F	INDUCTIVE	R	P	DAL
RER65FR698&	0.698	10	F	INDUCTIVE	R	P	DAL
RER65FR715&	0.715	10	F	INDUCTIVE	R	P	DAL
RER65FR732&	0.732	10	F	INDUCTIVE	R	P	DAL
RER65FR750&	0.750	10	F	INDUCTIVE	R	P	DAL
RER65FR768&	0.768	10	F	INDUCTIVE	R	P	DAL
RER65FR787&	0.787	10	F	INDUCTIVE	R	P	DAL
RER65FR806&	0.806	10	F	INDUCTIVE	R	P	DAL
RER65FR825&	0.825	10	F	INDUCTIVE	R	P	DAL
RER65FR845&	0.845	10	F	INDUCTIVE	R	P	DAL
RER65FR866&	0.866	10	F	INDUCTIVE	R	P	DAL
RER65FR887&	0.887	10	F	INDUCTIVE	R	P	DAL
RER65FR909&	0.909	10	F	INDUCTIVE	R	P	DAL
RER65FR931&	0.931	10	F	INDUCTIVE	R	P	DAL
RER65FR953&	0.953	10	F	INDUCTIVE	R	P	DAL
RER65FR976&	0.976	10	F	INDUCTIVE	R	P	DAL
RER65F1R00&	1.00	10	F	INDUCTIVE	R	P	DAL
RER65F1R02&	1.02	10	F	INDUCTIVE	R	P	DAL
RER65F1R05&	1.05	10	F	INDUCTIVE	R	P	DAL
RER65F1R07&	1.07	10	F	INDUCTIVE	R	P	DAL
RER65F1R10&	1.10	10	F	INDUCTIVE	R	P	DAL
RER65F1R13&	1.13	10	F	INDUCTIVE	R	P	DAL
RER65F1R15&	1.15	10	F	INDUCTIVE	R	P	DAL
RER65F1R18&	1.18	10	F	INDUCTIVE	R	P	DAL
RER65F1R21&	1.21	10	F	INDUCTIVE	R	P	DAL
RER65F1R24&	1.24	10	F	INDUCTIVE	R	P	DAL
RER65F1R27&	1.27	10	F	INDUCTIVE	R	P	DAL
RER65F1R30&	1.30	10	F	INDUCTIVE	R	P	DAL
RER65F1R33&	1.33	10	F	INDUCTIVE	R	P	DAL
RER65F1R37&	1.37	10	F	INDUCTIVE	R	P	DAL
RER65F1R40&	1.40	10	F	INDUCTIVE	R	P	DAL
RER65F1R43&	1.43	10	F	INDUCTIVE	R	P	DAL
RER65F1R47&	1.47	10	F	INDUCTIVE	R	P	DAL
RER65F1R50&	1.50	10	F	INDUCTIVE	R	P	DAL
RER65F1R54&	1.54	10	F	INDUCTIVE	R	P	DAL

RER65F1R58&	1.58	10	F	INDUCTIVE	R	P	DAL
RER65F1R62&	1.62	10	F	INDUCTIVE	R	P	DAL
RER65F1R65&	1.65	10	F	INDUCTIVE	R	P	DAL
RER65F1R69&	1.69	10	F	INDUCTIVE	R	P	DAL
RER65F1R74&	1.74	10	F	INDUCTIVE	R	P	DAL
RER65F1R78&	1.78	10	F	INDUCTIVE	R	P	DAL
RER65F1R82&	1.82	10	F	INDUCTIVE	R	P	DAL
RER65F1R87&	1.87	10	F	INDUCTIVE	R	P	DAL
RER65F1R91&	1.91	10	F	INDUCTIVE	R	P	DAL
RER65F1R96&	1.96	10	F	INDUCTIVE	R	P	DAL
RER65F2R00&	2.00	10	F	INDUCTIVE	R	P	DAL
RER65F2R05&	2.05	10	F	INDUCTIVE	R	P	DAL
RER65F2R10&	2.10	10	F	INDUCTIVE	R	P	DAL
RER65F2R15&	2.15	10	F	INDUCTIVE	R	P	DAL
RER65F2R21&	2.21	10	F	INDUCTIVE	R	P	DAL
RER65F2R26&	2.26	10	F	INDUCTIVE	R	P	DAL
RER65F2R32&	2.32	10	F	INDUCTIVE	R	P	DAL
RER65F2R37&	2.37	10	F	INDUCTIVE	R	P	DAL
RER65F2R43&	2.43	10	F	INDUCTIVE	R	P	DAL
RER65F2R49&	2.49	10	F	INDUCTIVE	R	P	DAL
RER65F2R55&	2.55	10	F	INDUCTIVE	R	P	DAL
RER65F2R61&	2.61	10	F	INDUCTIVE	R	P	DAL
RER65F2R67&	2.67	10	F	INDUCTIVE	R	P	DAL
RER65F2R74&	2.74	10	F	INDUCTIVE	R	P	DAL
RER65F2R80&	2.80	10	F	INDUCTIVE	R	P	DAL
RER65F2R87&	2.87	10	F	INDUCTIVE	R	P	DAL
RER65F2R94&	2.94	10	F	INDUCTIVE	R	P	DAL
RER65F3R01&	3.01	10	F	INDUCTIVE	R	P	DAL
RER65F3R09&	3.09	10	F	INDUCTIVE	R	P	DAL
RER65F3R16&	3.16	10	F	INDUCTIVE	R	P	DAL
RER65F3R24&	3.24	10	F	INDUCTIVE	R	P	DAL
RER65F3R32&	3.32	10	F	INDUCTIVE	R	P	DAL
RER65F3R40&	3.40	10	F	INDUCTIVE	R	P	DAL
RER65F3R48&	3.48	10	F	INDUCTIVE	R	P	DAL
RER65F3R57&	3.57	10	F	INDUCTIVE	R	P	DAL
RER65F3R65&	3.65	10	F	INDUCTIVE	R	P	DAL
RER65F3R74&	3.74	10	F	INDUCTIVE	R	P	DAL
RER65F3R83&	3.83	10	F	INDUCTIVE	R	P	DAL
RER65F3R92&	3.92	10	F	INDUCTIVE	R	P	DAL
RER65F4R02&	4.02	10	F	INDUCTIVE	R	P	DAL
RER65F4R12&	4.12	10	F	INDUCTIVE	R	P	DAL
RER65F4R22&	4.22	10	F	INDUCTIVE	R	P	DAL
RER65F4R32&	4.32	10	F	INDUCTIVE	R	P	DAL
RER65F4R42&	4.42	10	F	INDUCTIVE	R	P	DAL
RER65F4R53&	4.53	10	F	INDUCTIVE	R	P	DAL
RER65F4R64&	4.64	10	F	INDUCTIVE	R	P	DAL
RER65F4R75&	4.75	10	F	INDUCTIVE	R	P	DAL

RER65F4R87&	4.87	10	F	INDUCTIVE	R	P	DAL
RER65F4R99&	4.99	10	F	INDUCTIVE	R	P	DAL
RER65F5R11&	5.11	10	F	INDUCTIVE	R	P	DAL
RER65F5R23&	5.23	10	F	INDUCTIVE	R	P	DAL
RER65F5R36&	5.36	10	F	INDUCTIVE	R	P	DAL
RER65F5R49&	5.49	10	F	INDUCTIVE	R	P	DAL
RER65F5R62&	5.62	10	F	INDUCTIVE	R	P	DAL
RER65F5R76&	5.76	10	F	INDUCTIVE	R	P	DAL
RER65F5R90&	5.90	10	F	INDUCTIVE	R	P	DAL
RER65F6R04&	6.04	10	F	INDUCTIVE	R	P	DAL
RER65F6R19&	6.19	10	F	INDUCTIVE	R	P	DAL
RER65F6R34&	6.34	10	F	INDUCTIVE	R	P	DAL
RER65F6R49&	6.49	10	F	INDUCTIVE	R	P	DAL
RER65F6R65&	6.65	10	F	INDUCTIVE	R	P	DAL
RER65F6R81&	6.81	10	F	INDUCTIVE	R	P	DAL
RER65F6R98&	6.98	10	F	INDUCTIVE	R	P	DAL
RER65F7R15&	7.15	10	F	INDUCTIVE	R	P	DAL
RER65F7R32&	7.32	10	F	INDUCTIVE	R	P	DAL
RER65F7R50&	7.50	10	F	INDUCTIVE	R	P	DAL
RER65F7R68&	7.68	10	F	INDUCTIVE	R	P	DAL
RER65F7R87&	7.87	10	F	INDUCTIVE	R	P	DAL
RER65F8R06&	8.06	10	F	INDUCTIVE	R	P	DAL
RER65F8R25&	8.25	10	F	INDUCTIVE	R	P	DAL
RER65F8R45&	8.45	10	F	INDUCTIVE	R	P	DAL
RER65F8R66&	8.66	10	F	INDUCTIVE	R	P	DAL
RER65F8R87&	8.87	10	F	INDUCTIVE	R	P	DAL
RER65F9R09&	9.09	10	F	INDUCTIVE	R	P	DAL
RER65F9R31&	9.31	10	F	INDUCTIVE	R	P	DAL
RER65F9R53&	9.53	10	F	INDUCTIVE	R	P	DAL
RER65F9R76&	9.76	10	F	INDUCTIVE	R	P	DAL
RER65F10R0&	10.0	10	F	INDUCTIVE	R	P	DAL
RER65F10R2&	10.2	10	F	INDUCTIVE	R	P	DAL
RER65F10R5&	10.5	10	F	INDUCTIVE	R	P	DAL
RER65F10R7&	10.7	10	F	INDUCTIVE	R	P	DAL
RER65F11R0&	11.0	10	F	INDUCTIVE	R	P	DAL
RER65F11R3&	11.3	10	F	INDUCTIVE	R	P	DAL
RER65F11R5&	11.5	10	F	INDUCTIVE	R	P	DAL
RER65F11R8&	11.8	10	F	INDUCTIVE	R	P	DAL
RER65F12R1&	12.1	10	F	INDUCTIVE	R	P	DAL
RER65F12R4&	12.4	10	F	INDUCTIVE	R	P	DAL
RER65F12R7&	12.7	10	F	INDUCTIVE	R	P	DAL
RER65F13R0&	13.0	10	F	INDUCTIVE	R	P	DAL
RER65F13R3&	13.3	10	F	INDUCTIVE	R	P	DAL
RER65F13R7&	13.7	10	F	INDUCTIVE	R	P	DAL
RER65F14R0&	14.0	10	F	INDUCTIVE	R	P	DAL
RER65F14R3&	14.3	10	F	INDUCTIVE	R	P	DAL
RER65F14R7&	14.7	10	F	INDUCTIVE	R	P	DAL

RER65F15R0&	15.0	10	F	INDUCTIVE	R	P	DAL
RER65F15R4&	15.4	10	F	INDUCTIVE	R	P	DAL
RER65F15R8&	15.8	10	F	INDUCTIVE	R	P	DAL
RER65F16R2&	16.2	10	F	INDUCTIVE	R	P	DAL
RER65F16R5&	16.5	10	F	INDUCTIVE	R	P	DAL
RER65F16R9&	16.9	10	F	INDUCTIVE	R	P	DAL
RER65F17R4&	17.4	10	F	INDUCTIVE	R	P	DAL
RER65F17R8&	17.8	10	F	INDUCTIVE	R	P	DAL
RER65F18R2&	18.2	10	F	INDUCTIVE	R	P	DAL
RER65F18R7&	18.7	10	F	INDUCTIVE	R	P	DAL
RER65F19R1&	19.1	10	F	INDUCTIVE	R	P	DAL
RER65F19R6&	19.6	10	F	INDUCTIVE	R	P	DAL
RER65F20R0&	20.0	10	F	INDUCTIVE	R	P	DAL
RER65F20R5&	20.5	10	F	INDUCTIVE	R	P	DAL
RER65F21R0&	21.0	10	F	INDUCTIVE	R	P	DAL
RER65F21R5&	21.5	10	F	INDUCTIVE	R	P	DAL
RER65F22R1&	22.1	10	F	INDUCTIVE	R	P	DAL
RER65F22R6&	22.6	10	F	INDUCTIVE	R	P	DAL
RER65F23R2&	23.2	10	F	INDUCTIVE	R	P	DAL
RER65F23R7&	23.7	10	F	INDUCTIVE	R	P	DAL
RER65F24R3&	24.3	10	F	INDUCTIVE	R	P	DAL
RER65F24R9&	24.9	10	F	INDUCTIVE	R	P	DAL
RER65F25R5&	25.5	10	F	INDUCTIVE	R	P	DAL
RER65F26R1&	26.1	10	F	INDUCTIVE	R	P	DAL
RER65F26R7&	26.7	10	F	INDUCTIVE	R	P	DAL
RER65F27R4&	27.4	10	F	INDUCTIVE	R	P	DAL
RER65F28R0&	28.0	10	F	INDUCTIVE	R	P	DAL
RER65F28R7&	28.7	10	F	INDUCTIVE	R	P	DAL
RER65F29R4&	29.4	10	F	INDUCTIVE	R	P	DAL
RER65F30R1&	30.1	10	F	INDUCTIVE	R	P	DAL
RER65F30R9&	30.9	10	F	INDUCTIVE	R	P	DAL
RER65F31R6&	31.6	10	F	INDUCTIVE	R	P	DAL
RER65F32R4&	32.4	10	F	INDUCTIVE	R	P	DAL
RER65F33R2&	33.2	10	F	INDUCTIVE	R	P	DAL
RER65F34R0&	34.0	10	F	INDUCTIVE	R	P	DAL
RER65F34R8&	34.8	10	F	INDUCTIVE	R	P	DAL
RER65F35R7&	35.7	10	F	INDUCTIVE	R	P	DAL
RER65F36R5&	36.5	10	F	INDUCTIVE	R	P	DAL
RER65F37R4&	37.4	10	F	INDUCTIVE	R	P	DAL
RER65F38R3&	38.3	10	F	INDUCTIVE	R	P	DAL
RER65F39R2&	39.2	10	F	INDUCTIVE	R	P	DAL
RER65F40R2&	40.2	10	F	INDUCTIVE	R	P	DAL
RER65F41R2&	41.2	10	F	INDUCTIVE	R	P	DAL
RER65F42R2&	42.2	10	F	INDUCTIVE	R	P	DAL
RER65F43R2&	43.2	10	F	INDUCTIVE	R	P	DAL
RER65F44R2&	44.2	10	F	INDUCTIVE	R	P	DAL
RER65F45R3&	45.3	10	F	INDUCTIVE	R	P	DAL

RER65F46R4&	46.4	10	F	INDUCTIVE	R	P	DAL
RER65F47R5&	47.5	10	F	INDUCTIVE	R	P	DAL
RER65F48R7&	48.7	10	F	INDUCTIVE	R	P	DAL
RER65F49R9&	49.9	10	F	INDUCTIVE	R	P	DAL
RER65F51R1&	51.1	10	F	INDUCTIVE	R	P	DAL
RER65F52R3&	52.3	10	F	INDUCTIVE	R	P	DAL
RER65F53R6&	53.6	10	F	INDUCTIVE	R	P	DAL
RER65F54R9&	54.9	10	F	INDUCTIVE	R	P	DAL
RER65F56R2&	56.2	10	F	INDUCTIVE	R	P	DAL
RER65F57R6&	57.6	10	F	INDUCTIVE	R	P	DAL
RER65F59R0&	59.0	10	F	INDUCTIVE	R	P	DAL
RER65F60R4&	60.4	10	F	INDUCTIVE	R	P	DAL
RER65F61R9&	61.9	10	F	INDUCTIVE	R	P	DAL
RER65F63R4&	63.4	10	F	INDUCTIVE	R	P	DAL
RER65F64R9&	64.9	10	F	INDUCTIVE	R	P	DAL
RER65F66R5&	66.5	10	F	INDUCTIVE	R	P	DAL
RER65F68R1&	68.1	10	F	INDUCTIVE	R	P	DAL
RER65F69R8&	69.8	10	F	INDUCTIVE	R	P	DAL
RER65F71R5&	71.5	10	F	INDUCTIVE	R	P	DAL
RER65F73R2&	73.2	10	F	INDUCTIVE	R	P	DAL
RER65F75R0&	75.0	10	F	INDUCTIVE	R	P	DAL
RER65F76R8&	76.8	10	F	INDUCTIVE	R	P	DAL
RER65F78R7&	78.7	10	F	INDUCTIVE	R	P	DAL
RER65F80R6&	80.6	10	F	INDUCTIVE	R	P	DAL
RER65F82R5&	82.5	10	F	INDUCTIVE	R	P	DAL
RER65F84R5&	84.5	10	F	INDUCTIVE	R	P	DAL
RER65F86R6&	86.6	10	F	INDUCTIVE	R	P	DAL
RER65F88R7&	88.7	10	F	INDUCTIVE	R	P	DAL
RER65F90R9&	90.9	10	F	INDUCTIVE	R	P	DAL
RER65F93R1&	93.1	10	F	INDUCTIVE	R	P	DAL
RER65F95R3&	95.3	10	F	INDUCTIVE	R	P	DAL
RER65F97R6&	97.6	10	F	INDUCTIVE	R	P	DAL
RER65F100R&	100	10	F	INDUCTIVE	R	P	DAL
RER65F102R&	102	10	F	INDUCTIVE	R	P	DAL
RER65F105R&	105	10	F	INDUCTIVE	R	P	DAL
RER65F107R&	107	10	F	INDUCTIVE	R	P	DAL
RER65F110R&	110	10	F	INDUCTIVE	R	P	DAL
RER65F113R&	113	10	F	INDUCTIVE	R	P	DAL
RER65F115R&	115	10	F	INDUCTIVE	R	P	DAL
RER65F118R&	118	10	F	INDUCTIVE	R	P	DAL
RER65F121R&	121	10	F	INDUCTIVE	R	P	DAL
RER65F124R&	124	10	F	INDUCTIVE	R	P	DAL
RER65F127R&	127	10	F	INDUCTIVE	R	P	DAL
RER65F130R&	130	10	F	INDUCTIVE	R	P	DAL
RER65F133R&	133	10	F	INDUCTIVE	R	P	DAL
RER65F137R&	137	10	F	INDUCTIVE	R	P	DAL
RER65F140R&	140	10	F	INDUCTIVE	R	P	DAL

RER65F143R&	143	10	F	INDUCTIVE	R	P	DAL
RER65F147R&	147	10	F	INDUCTIVE	R	P	DAL
RER65F150R&	150	10	F	INDUCTIVE	R	P	DAL
RER65F154R&	154	10	F	INDUCTIVE	R	P	DAL
RER65F158R&	158	10	F	INDUCTIVE	R	P	DAL
RER65F162R&	162	10	F	INDUCTIVE	R	P	DAL
RER65F165R&	165	10	F	INDUCTIVE	R	P	DAL
RER65F169R&	169	10	F	INDUCTIVE	R	P	DAL
RER65F174R&	174	10	F	INDUCTIVE	R	P	DAL
RER65F178R&	178	10	F	INDUCTIVE	R	P	DAL
RER65F182R&	182	10	F	INDUCTIVE	R	P	DAL
RER65F187R&	187	10	F	INDUCTIVE	R	P	DAL
RER65F191R&	191	10	F	INDUCTIVE	R	P	DAL
RER65F196R&	196	10	F	INDUCTIVE	R	P	DAL
RER65F200R&	200	10	F	INDUCTIVE	R	P	DAL
RER65F205R&	205	10	F	INDUCTIVE	R	P	DAL
RER65F210R&	210	10	F	INDUCTIVE	R	P	DAL
RER65F215R&	215	10	F	INDUCTIVE	R	P	DAL
RER65F221R&	221	10	F	INDUCTIVE	R	P	DAL
RER65F226R&	226	10	F	INDUCTIVE	R	P	DAL
RER65F232R&	232	10	F	INDUCTIVE	R	P	DAL
RER65F237R&	237	10	F	INDUCTIVE	R	P	DAL
RER65F243R&	243	10	F	INDUCTIVE	R	P	DAL
RER65F249R&	249	10	F	INDUCTIVE	R	P	DAL
RER65F255R&	255	10	F	INDUCTIVE	R	P	DAL
RER65F261R&	261	10	F	INDUCTIVE	R	P	DAL
RER65F267R&	267	10	F	INDUCTIVE	R	P	DAL
RER65F274R&	274	10	F	INDUCTIVE	R	P	DAL
RER65F280R&	280	10	F	INDUCTIVE	R	P	DAL
RER65F287R&	287	10	F	INDUCTIVE	R	P	DAL
RER65F294R&	294	10	F	INDUCTIVE	R	P	DAL
RER65F301R&	301	10	F	INDUCTIVE	R	P	DAL
RER65F309R&	309	10	F	INDUCTIVE	R	P	DAL
RER65F316R&	316	10	F	INDUCTIVE	R	P	DAL
RER65F324R&	324	10	F	INDUCTIVE	R	P	DAL
RER65F332R&	332	10	F	INDUCTIVE	R	P	DAL
RER65F340R&	340	10	F	INDUCTIVE	R	P	DAL
RER65F348R&	348	10	F	INDUCTIVE	R	P	DAL
RER65F357R&	357	10	F	INDUCTIVE	R	P	DAL
RER65F365R&	365	10	F	INDUCTIVE	R	P	DAL
RER65F374R&	374	10	F	INDUCTIVE	R	P	DAL
RER65F383R&	383	10	F	INDUCTIVE	R	P	DAL
RER65F392R&	392	10	F	INDUCTIVE	R	P	DAL
RER65F402R&	402	10	F	INDUCTIVE	R	P	DAL
RER65F412R&	412	10	F	INDUCTIVE	R	P	DAL
RER65F422R&	422	10	F	INDUCTIVE	R	P	DAL
RER65F432R&	432	10	F	INDUCTIVE	R	P	DAL

RER65F442R&	442	10	F	INDUCTIVE	R	P	DAL
RER65F453R&	453	10	F	INDUCTIVE	R	P	DAL
RER65F464R&	464	10	F	INDUCTIVE	R	P	DAL
RER65F475R&	475	10	F	INDUCTIVE	R	P	DAL
RER65F487R&	487	10	F	INDUCTIVE	R	P	DAL
RER65F499R&	499	10	F	INDUCTIVE	R	P	DAL
RER65F511R&	511	10	F	INDUCTIVE	R	P	DAL
RER65F523R&	523	10	F	INDUCTIVE	R	P	DAL
RER65F536R&	536	10	F	INDUCTIVE	R	P	DAL
RER65F549R&	549	10	F	INDUCTIVE	R	P	DAL
RER65F562R&	562	10	F	INDUCTIVE	R	P	DAL
RER65F576R&	576	10	F	INDUCTIVE	R	P	DAL
RER65F590R&	590	10	F	INDUCTIVE	R	P	DAL
RER65F604R&	604	10	F	INDUCTIVE	R	P	DAL
RER65F619R&	619	10	F	INDUCTIVE	R	P	DAL
RER65F634R&	634	10	F	INDUCTIVE	R	P	DAL
RER65F649R&	649	10	F	INDUCTIVE	R	P	DAL
RER65F665R&	665	10	F	INDUCTIVE	R	P	DAL
RER65F681R&	681	10	F	INDUCTIVE	R	P	DAL
RER65F698R&	698	10	F	INDUCTIVE	R	P	DAL
RER65F715R&	715	10	F	INDUCTIVE	R	P	DAL
RER65F732R&	732	10	F	INDUCTIVE	R	P	DAL
RER65F750R&	750	10	F	INDUCTIVE	R	P	DAL
RER65F768R&	768	10	F	INDUCTIVE	R	P	DAL
RER65F787R&	787	10	F	INDUCTIVE	R	P	DAL
RER65F806R&	806	10	F	INDUCTIVE	R	P	DAL
RER65F825R&	825	10	F	INDUCTIVE	R	P	DAL
RER65F845R&	845	10	F	INDUCTIVE	R	P	DAL
RER65F866R&	866	10	F	INDUCTIVE	R	P	DAL
RER65F887R&	887	10	F	INDUCTIVE	R	P	DAL
RER65F909R&	909	10	F	INDUCTIVE	R	P	DAL
RER65F931R&	931	10	F	INDUCTIVE	R	P	DAL
RER65F953R&	953	10	F	INDUCTIVE	R	P	DAL
RER65F976R&	976	10	F	INDUCTIVE	R	P	DAL
RER65F1001&	1,000	10	F	INDUCTIVE	R	P	DAL
RER65F1021&	1,020	10	F	INDUCTIVE	R	P	DAL
RER65F1051&	1,050	10	F	INDUCTIVE	R	P	DAL
RER65F1071&	1,070	10	F	INDUCTIVE	R	P	DAL
RER65F1101&	1,100	10	F	INDUCTIVE	R	P	DAL
RER65F1131&	1,130	10	F	INDUCTIVE	R	P	DAL
RER65F1151&	1,150	10	F	INDUCTIVE	R	P	DAL
RER65F1181&	1,180	10	F	INDUCTIVE	R	P	DAL
RER65F1211&	1,210	10	F	INDUCTIVE	R	P	DAL
RER65F1241&	1,240	10	F	INDUCTIVE	R	P	DAL
RER65F1271&	1,270	10	F	INDUCTIVE	R	P	DAL
RER65F1301&	1,300	10	F	INDUCTIVE	R	P	DAL
RER65F1331&	1,330	10	F	INDUCTIVE	R	P	DAL

RER65F1371&	1,370	10	F	INDUCTIVE	R	P	DAL
RER65F1401&	1,400	10	F	INDUCTIVE	R	P	DAL
RER65F1431&	1,430	10	F	INDUCTIVE	R	P	DAL
RER65F1471&	1,470	10	F	INDUCTIVE	R	P	DAL
RER65F1501&	1,500	10	F	INDUCTIVE	R	P	DAL
RER65F1541&	1,540	10	F	INDUCTIVE	R	P	DAL
RER65F1581&	1,580	10	F	INDUCTIVE	R	P	DAL
RER65F1621&	1,620	10	F	INDUCTIVE	R	P	DAL
RER65F1651&	1,650	10	F	INDUCTIVE	R	P	DAL
RER65F1691&	1,690	10	F	INDUCTIVE	R	P	DAL
RER65F1741&	1,740	10	F	INDUCTIVE	R	P	DAL
RER65F1781&	1,780	10	F	INDUCTIVE	R	P	DAL
RER65F1821&	1,820	10	F	INDUCTIVE	R	P	DAL
RER65F1871&	1,870	10	F	INDUCTIVE	R	P	DAL
RER65F1911&	1,910	10	F	INDUCTIVE	R	P	DAL
RER65F1961&	1,960	10	F	INDUCTIVE	R	P	DAL
RER65F2001&	2,000	10	F	INDUCTIVE	R	P	DAL
RER65F2051&	2,050	10	F	INDUCTIVE	R	P	DAL
RER65F2101&	2,100	10	F	INDUCTIVE	R	P	DAL
RER65F2151&	2,150	10	F	INDUCTIVE	R	P	DAL
RER65F2211&	2,210	10	F	INDUCTIVE	R	P	DAL
RER65F2261&	2,260	10	F	INDUCTIVE	R	P	DAL
RER65F2321&	2,320	10	F	INDUCTIVE	R	P	DAL
RER65F2371&	2,370	10	F	INDUCTIVE	R	P	DAL
RER65F2431&	2,430	10	F	INDUCTIVE	R	P	DAL
RER65F2491&	2,490	10	F	INDUCTIVE	R	P	DAL
RER65F2551&	2,550	10	F	INDUCTIVE	R	P	DAL
RER65F2611&	2,610	10	F	INDUCTIVE	R	P	DAL
RER65F2671&	2,670	10	F	INDUCTIVE	R	P	DAL
RER65F2741&	2,740	10	F	INDUCTIVE	R	P	DAL
RER65F2801&	2,800	10	F	INDUCTIVE	R	P	DAL
RER65F2871&	2,870	10	F	INDUCTIVE	R	P	DAL
RER65F2941&	2,940	10	F	INDUCTIVE	R	P	DAL
RER65F3011&	3,010	10	F	INDUCTIVE	R	P	DAL
RER65F3091&	3,090	10	F	INDUCTIVE	R	P	DAL
RER65F3161&	3,160	10	F	INDUCTIVE	R	P	DAL
RER65F3241&	3,240	10	F	INDUCTIVE	R	P	DAL
RER65F3321&	3,320	10	F	INDUCTIVE	R	P	DAL
RER65F3401&	3,400	10	F	INDUCTIVE	R	P	DAL
RER65F3481&	3,480	10	F	INDUCTIVE	R	P	DAL
RER65F3571&	3,570	10	F	INDUCTIVE	R	P	DAL
RER65F3651&	3,650	10	F	INDUCTIVE	R	P	DAL
RER65F3741&	3,740	10	F	INDUCTIVE	R	P	DAL
RER65F3831&	3,830	10	F	INDUCTIVE	R	P	DAL
RER65F3921&	3,920	10	F	INDUCTIVE	R	P	DAL
RER65F4021&	4,020	10	F	INDUCTIVE	R	P	DAL
RER65F4121&	4,120	10	F	INDUCTIVE	R	P	DAL

RER65F4221&	4,220	10	F	INDUCTIVE	R	P	DAL
RER65F4321&	4,320	10	F	INDUCTIVE	R	P	DAL
RER65F4421&	4,420	10	F	INDUCTIVE	R	P	DAL
RER65F4531&	4,530	10	F	INDUCTIVE	R	P	DAL
RER65F4641&	4,640	10	F	INDUCTIVE	R	P	DAL
RER65F4751&	4,750	10	F	INDUCTIVE	R	P	DAL
RER65F4871&	4,870	10	F	INDUCTIVE	R	P	DAL
RER65F4991&	4,990	10	F	INDUCTIVE	R	P	DAL
RER65F5111&	5,110	10	F	INDUCTIVE	R	P	DAL
RER65F5231&	5,230	10	F	INDUCTIVE	R	P	DAL
RER65F5361&	5,360	10	F	INDUCTIVE	R	P	DAL
RER65F5491&	5,490	10	F	INDUCTIVE	R	P	DAL
RER65F5621&	5,620	10	F	INDUCTIVE	R	P	DAL

RER65 RESISTORS DECADE BREAKDOWN

Click on the link below to see the associated parts selection listing:

Resistance Range
0.100 Ohms through 0.976 Ohms
1.00 Ohms through 9.76 Ohms
10.0 Ohms through 97.6 Ohms
100 Ohms through 976 Ohms
1000 Ohms through 5620 Ohms

RER65 Wirewound Resistors: 0.100 Ohms through 0.976 Ohms

	Resistance	Power	Resistance		Level 1	Level 2	
Part Number	Value (Ohms)	Rating (W)	Tolerance	Winding	(FRL)(&)	(FRL)(&)	Manufacturer
RER65FR100&	0.100	10	F	INDUCTIVE	R	P	DAL
RER65FR102&	0.102	10	F	INDUCTIVE	R	P	DAL
RER65FR105&	0.105	10	F	INDUCTIVE	R	P	DAL
RER65FR107&	0.107	10	F	INDUCTIVE	R	P	DAL
RER65FR110&	0.110	10	F	INDUCTIVE	R	P	DAL
RER65FR113&	0.113	10	F	INDUCTIVE	R	P	DAL
RER65FR115&	0.115	10	F	INDUCTIVE	R	P	DAL
RER65FR118&	0.118	10	F	INDUCTIVE	R	P	DAL
RER65FR121&	0.121	10	F	INDUCTIVE	R	P	DAL
RER65FR124&	0.124	10	F	INDUCTIVE	R	P	DAL
RER65FR127&	0.127	10	F	INDUCTIVE	R	P	DAL
RER65FR130&	0.130	10	F	INDUCTIVE	R	P	DAL
RER65FR133&	0.133	10	F	INDUCTIVE	R	P	DAL
	Resistance	Power	Resistance		Level 1	Level 2	
Part Number	Value (Ohms)	Rating (W)	Tolerance	Winding	(FRL)(&)	(FRL)(&)	Manufacturer
RER65FR137&	0.137	10	F	INDUCTIVE	R	P	DAL

RER65FR140&	0.140	10	F	INDUCTIVE	R	P	DAL
RER65FR143&	0.143	10	F	INDUCTIVE	R	P	DAL
RER65FR147&	0.147	10	F	INDUCTIVE	R	P	DAL
RER65FR150&	0.150	10	F	INDUCTIVE	R	P	DAL
RER65FR154&	0.154	10	F	INDUCTIVE	R	P	DAL
RER65FR158&	0.158	10	F	INDUCTIVE	R	P	DAL
RER65FR162&	0.162	10	F	INDUCTIVE	R	P	DAL
RER65FR165&	0.165	10	F	INDUCTIVE	R	P	DAL
RER65FR169&	0.169	10	F	INDUCTIVE	R	P	DAL
RER65FR174&	0.174	10	F	INDUCTIVE	R	P	DAL
RER65FR178&	0.178	10	F	INDUCTIVE	R	P	DAL
RER65FR182&	0.182	10	F	INDUCTIVE	R	P	DAL
RER65FR187&	0.187	10	F	INDUCTIVE	R	P	DAL
	Resistance	Power	Resistance		Level 1	Level 2	
Part Number	Value (Ohms)	Rating (W)	Tolerance	Winding	(FRL)(&)	(FRL)(&)	Manufacturer
RER65FR191&	0.191	10	F	INDUCTIVE	R	P	DAL
RER65FR196&	0.196	10	F	INDUCTIVE	R	P	DAL
RER65FR200&	0.200	10	F	INDUCTIVE	R	P	DAL
RER65FR205&	0.205	10	F	INDUCTIVE	R	P	DAL
RER65FR210&	0.210	10	F	INDUCTIVE	R	P	DAL
RER65FR215&	0.215	10	F	INDUCTIVE	R	P	DAL
RER65FR221&	0.221	10	F	INDUCTIVE	R	P	DAL
RER65FR226&	0.226	10	F	INDUCTIVE	R	P	DAL
RER65FR232&	0.232	10	F	INDUCTIVE	R	P	DAL
RER65FR237&	0.237	10	F	INDUCTIVE	R	P	DAL
RER65FR243&	0.243	10	F	INDUCTIVE	R	P	DAL
RER65FR249&	0.249	10	F	INDUCTIVE	R	P	DAL
RER65FR255&	0.255	10	F	INDUCTIVE	R	P	DAL
RER65FR261&	0.261	10	F	INDUCTIVE	R	P	DAL
	Resistance	Power	Resistance		Level 1	Level 2	
Part Number	Value (Ohms)	Rating (W)	Tolerance	Winding	(FRL)(&)	(FRL)(&)	Manufacturer
RER65FR267&	0.267	10	F	INDUCTIVE	R	P	DAL
RER65FR274&	0.274	10	F	INDUCTIVE	R	P	DAL
RER65FR280&	0.280	10	F	INDUCTIVE	R	P	DAL
RER65FR287&	0.287	10	F	INDUCTIVE	R	P	DAL
RER65FR294&	0.294	10	F	INDUCTIVE	R	P	DAL
RER65FR301&	0.301	10	F	INDUCTIVE	R	P	DAL
RER65FR309&	0.309	10	F	INDUCTIVE	R	P	DAL
RER65FR316&	0.316	10	F	INDUCTIVE	R	P	DAL
RER65FR324&	0.324	10	F	INDUCTIVE	R	P	DAL
RER65FR332&	0.332	10	F	INDUCTIVE	R	P	DAL
RER65FR340&	0.340	10	F	INDUCTIVE	R	P	DAL
RER65FR348&	0.348	10	F	INDUCTIVE	R	P	DAL
RER65FR357&	0.357	10	F	INDUCTIVE	R	P	DAL
RER65FR365&	0.365	10	F	INDUCTIVE	R	P	DAL
	Resistance	Power	Resistance		Level 1	Level 2	
Part Number	Value (Ohms)	Rating (W)	Tolerance	Winding	(FRL)(&)	(FRL)(&)	Manufacturer

RER65FR374&	0.374	10	F	INDUCTIVE	R	P	DAL
RER65FR383&	0.383	10	F	INDUCTIVE	R	P	DAL
RER65FR392&	0.392	10	F	INDUCTIVE	R	P	DAL
RER65FR402&	0.402	10	F	INDUCTIVE	R	P	DAL
RER65FR412&	0.412	10	F	INDUCTIVE	R	P	DAL
RER65FR422&	0.422	10	F	INDUCTIVE	R	P	DAL
RER65FR432&	0.432	10	F	INDUCTIVE	R	P	DAL
RER65FR442&	0.442	10	F	INDUCTIVE	R	P	DAL
RER65FR453&	0.453	10	F	INDUCTIVE	R	P	DAL
RER65FR464&	0.464	10	F	INDUCTIVE	R	P	DAL
RER65FR475&	0.475	10	F	INDUCTIVE	R	P	DAL
RER65FR487&	0.487	10	F	INDUCTIVE	R	P	DAL
RER65FR499&	0.499	10	F	INDUCTIVE	R	P	DAL
RER65FR511&	0.511	10	F	INDUCTIVE	R	P	DAL
	Resistance	Power	Resistance		Level 1	Level 2	
Part Number	Value (Ohms)	Rating (W)	Tolerance	Winding	(FRL)(&)	(FRL)(&)	Manufacturer
RER65FR523&	0.523	10	F	INDUCTIVE	R	P	DAL
RER65FR536&	0.536	10	F	INDUCTIVE	R	P	DAL
RER65FR549&	0.549	10	F	INDUCTIVE	R	P	DAL
RER65FR562&	0.562	10	F	INDUCTIVE	R	P	DAL
RER65FR576&	0.576	10	F	INDUCTIVE	R	P	DAL
RER65FR590&	0.590	10	F	INDUCTIVE	R	P	DAL
RER65FR604&	0.604	10	F	INDUCTIVE	R	P	DAL
RER65FR619&	0.619	10	F	INDUCTIVE	R	P	DAL
RER65FR634&	0.634	10	F	INDUCTIVE	R	P	DAL
RER65FR649&	0.649	10	F	INDUCTIVE	R	P	DAL
RER65FR665&	0.665	10	F	INDUCTIVE	R	P	DAL
RER65FR681&	0.681	10	F	INDUCTIVE	R	P	DAL
RER65FR698&	0.698	10	F	INDUCTIVE	R	P	DAL
	Resistance	Power	Resistance		Level 1	Level 2	
Part Number	Value (Ohms)	Rating (W)	Tolerance	Winding	(FRL)(&)	(FRL)(&)	Manufacturer
RER65FR715&	0.715	10	F	INDUCTIVE	R	P	DAL
RER65FR732&	0.732	10	F	INDUCTIVE	R	P	DAL
RER65FR750&	0.750	10	F	INDUCTIVE	R	P	DAL
RER65FR768&	0.768	10	F	INDUCTIVE	R	P	DAL
RER65FR787&	0.787	10	F	INDUCTIVE	R	P	DAL
RER65FR806&	0.806	10	F	INDUCTIVE	R	P	DAL
RER65FR825&	0.825	10	F	INDUCTIVE	R	P	DAL
RER65FR845&	0.845	10	F	INDUCTIVE	R	P	DAL
	Resistance	Power	Resistance		Level 1	Level 2	
Part Number	Value (Ohms)	Rating (W)	Tolerance	Winding	(FRL)(&)	(FRL)(&)	Manufacturer
RER65FR866&	0.866	10	F	INDUCTIVE	R	P	DAL
RER65FR887&	0.887	10	F	INDUCTIVE	R	P	DAL
RER65FR909&	0.909	10	F	INDUCTIVE	R	P	DAL
RER65FR931&	0.930	10	F	INDUCTIVE	R	P	DAL
RER65FR953&	0.953	10	F	INDUCTIVE	R	P	DAL
RER65FR976&	0.976	10	F	INDUCTIVE	R	P	DAL

	Resistance	Power	Resistance		Level 1	Level 2	
Part Number	Value (Ohms)	Rating (W)	Tolerance	Winding	(FRL)(&)	(FRL)(&)	Manufacturer

RER65 Wirewound Resistors: 1.00 Ohms through 9.76 Ohms

	Resistance	Power	Resistance		Level 1	Level 2	
Part Number	Value (Ohms)	Rating (W)	Tolerance	Winding	(FRL)(&)	(FRL)(&)	Manufacturer
RER65F1R00&	1.00	10	F	INDUCTIVE	R	P	DAL
RER65F1R02&	1.02	10	F	INDUCTIVE	R	P	DAL
RER65F1R05&	1.05	10	F	INDUCTIVE	R	P	DAL
RER65F1R07&	1.07	10	F	INDUCTIVE	R	P	DAL
RER65F1R10&	1.10	10	F	INDUCTIVE	R	P	DAL
RER65F1R13&	1.13	10	F	INDUCTIVE	R	P	DAL
RER65F1R15&	1.15	10	F	INDUCTIVE	R	P	DAL
RER65F1R18&	1.18	10	F	INDUCTIVE	R	P	DAL
RER65F1R21&	1.21	10	F	INDUCTIVE	R	P	DAL
RER65F1R24&	1.24	10	F	INDUCTIVE	R	P	DAL
RER65F1R27&	1.27	10	F	INDUCTIVE	R	P	DAL
RER65F1R30&	1.30	10	F	INDUCTIVE	R	P	DAL
RER65F1R33&	1.33	10	F	INDUCTIVE	R	P	DAL
	Resistance	Power	Resistance		Level 1	Level 2	
Part Number	Value (Ohms)	Rating (W)	Tolerance	Winding	(FRL)(&)	(FRL)(&)	Manufacturer
RER65F1R37&	1.37	10	F	INDUCTIVE	R	P	DAL
RER65F1R40&	1.40	10	F	INDUCTIVE	R	P	DAL
RER65F1R43&	1.43	10	F	INDUCTIVE	R	P	DAL
RER65F1R47&	1.47	10	F	INDUCTIVE	R	P	DAL
RER65F1R50&	1.50	10	F	INDUCTIVE	R	P	DAL
RER65F1R54&	1.54	10	F	INDUCTIVE	R	P	DAL
RER65F1R58&	1.58	10	F	INDUCTIVE	R	P	DAL
RER65F1R62&	1.62	10	F	INDUCTIVE	R	P	DAL
RER65F1R65&	1.65	10	F	INDUCTIVE	R	P	DAL
RER65F1R69&	1.69	10	F	INDUCTIVE	R	P	DAL
RER65F1R74&	1.74	10	F	INDUCTIVE	R	P	DAL
RER65F1R78&	1.78	10	F	INDUCTIVE	R	P	DAL
RER65F1R82&	1.82	10	F	INDUCTIVE	R	P	DAL
RER65F1R87&	1.87	10	F	INDUCTIVE	R	P	DAL
	Resistance	Power	Resistance		Level 1	Level 2	
Part Number	Value (Ohms)	Rating (W)	Tolerance	Winding	(FRL)(&)	(FRL)(&)	Manufacturer
RER65F1R91&	1.91	10	F	INDUCTIVE	R	P	DAL
RER65F1R96&	1.96	10	F	INDUCTIVE	R	P	DAL
RER65F2R00&	2.00	10	F	INDUCTIVE	R	P	DAL
RER65F2R05&	2.05	10	F	INDUCTIVE	R	P	DAL
RER65F2R10&	2.10	10	F	INDUCTIVE	R	P	DAL
RER65F2R15&	2.15	10	F	INDUCTIVE	R	P	DAL
RER65F2R21&	2.21	10	F	INDUCTIVE	R	P	DAL

RER65F2R26&	2.26	10	F	INDUCTIVE	R	P	DAL
RER65F2R32&	2.32	10	F	INDUCTIVE	R	P	DAL
RER65F2R37&	2.37	10	F	INDUCTIVE	R	P	DAL
RER65F2R43&	2.43	10	F	INDUCTIVE	R	P	DAL
RER65F2R49&	2.49	10	F	INDUCTIVE	R	P	DAL
RER65F2R55&	2.55	10	F	INDUCTIVE	R	P	DAL
RER65F2R61&	2.61	10	F	INDUCTIVE	R	P	DAL
	Resistance	Power	Resistance		Level 1	Level 2	
Part Number	Value (Ohms)	Rating (W)	Tolerance	Winding	(FRL)(&)	(FRL)(&)	Manufacturer
RER65F2R67&	2.67	10	F	INDUCTIVE	R	P	DAL
RER65F2R74&	2.74	10	F	INDUCTIVE	R	P	DAL
RER65F2R80&	2.80	10	F	INDUCTIVE	R	P	DAL
RER65F2R87&	2.87	10	F	INDUCTIVE	R	P	DAL
RER65F2R94&	2.94	10	F	INDUCTIVE	R	P	DAL
RER65F3R01&	3.01	10	F	INDUCTIVE	R	P	DAL
RER65F3R09&	3.09	10	F	INDUCTIVE	R	P	DAL
RER65F3R16&	3.16	10	F	INDUCTIVE	R	P	DAL
RER65F3R24&	3.24	10	F	INDUCTIVE	R	P	DAL
RER65F3R32&	3.32	10	F	INDUCTIVE	R	P	DAL
RER65F3R40&	3.40	10	F	INDUCTIVE	R	P	DAL
RER65F3R48&	3.48	10	F	INDUCTIVE	R	P	DAL
RER65F3R57&	3.57	10	F	INDUCTIVE	R	P	DAL
RER65F3R65&	3.65	10	F	INDUCTIVE	R	P	DAL
	Resistance	Power	Resistance		Level 1	Level 2	
Part Number	Value (Ohms)	Rating (W)	Tolerance	Winding	(FRL)(&)	(FRL)(&)	Manufacturer
RER65F3R74&	3.74	10	F	INDUCTIVE	R	P	DAL
RER65F3R83&	3.83	10	F	INDUCTIVE	R	P	DAL
RER65F3R92&	3.92	10	F	INDUCTIVE	R	P	DAL
RER65F4R02&	4.02	10	F	INDUCTIVE	R	P	DAL
RER65F4R12&	4.12	10	F	INDUCTIVE	R	P	DAL
RER65F4R22&	4.22	10	F	INDUCTIVE	R	P	DAL
RER65F4R32&	4.32	10	F	INDUCTIVE	R	P	DAL
RER65F4R42&	4.42	10	F	INDUCTIVE	R	P	DAL
RER65F4R53&	4.53	10	F	INDUCTIVE	R	P	DAL
RER65F4R64&	4.64	10	F	INDUCTIVE	R	P	DAL
RER65F4R75&	4.75	10	F	INDUCTIVE	R	P	DAL
RER65F4R87&	4.87	10	F	INDUCTIVE	R	P	DAL
RER65F4R99&	4.99	10	F	INDUCTIVE	R	P	DAL
RER65F5R11&	5.11	10	F	INDUCTIVE	R	P	DAL
	Resistance	Power	Resistance		Level 1	Level 2	
Part Number	Value (Ohms)	Rating (W)	Tolerance	Winding	(FRL)(&)	(FRL)(&)	Manufacturer
RER65F5R23&	5.23	10	F	INDUCTIVE	R	P	DAL
RER65F5R36&	5.36	10	F	INDUCTIVE	R	P	DAL
RER65F5R49&	5.49	10	F	INDUCTIVE	R	P	DAL
RER65F5R62&	5.62	10	F	INDUCTIVE	R	P	DAL
RER65F5R76&	5.76	10	F	INDUCTIVE	R	P	DAL
RER65F5R90&	5.90	10	F	INDUCTIVE	R	P	DAL

RER65F6R04&	6.04	10	F	INDUCTIVE	R	P	DAL
RER65F6R19&	6.19	10	F	INDUCTIVE	R	P	DAL
RER65F6R34&	6.34	10	F	INDUCTIVE	R	P	DAL
RER65F6R49&	6.49	10	F	INDUCTIVE	R	P	DAL
RER65F6R65&	6.65	10	F	INDUCTIVE	R	P	DAL
RER65F6R81&	6.81	10	F	INDUCTIVE	R	P	DAL
RER65F6R98&	6.98	10	F	INDUCTIVE	R	P	DAL
	Resistance	Power	Resistance		Level 1	Level 2	
Part Number	Value (Ohms)	Rating (W)	Tolerance	Winding	(FRL)(&)	(FRL)(&)	Manufacturer
RER65F7R15&	7.15	10	F	INDUCTIVE	R	P	DAL
RER65F7R32&	7.32	10	F	INDUCTIVE	R	P	DAL
RER65F7R50&	7.50	10	F	INDUCTIVE	R	P	DAL
RER65F7R68&	7.68	10	F	INDUCTIVE	R	P	DAL
RER65F7R87&	7.87	10	F	INDUCTIVE	R	P	DAL
RER65F8R06&	8.06	10	F	INDUCTIVE	R	P	DAL
RER65F8R25&	8.25	10	F	INDUCTIVE	R	P	DAL
RER65F8R45&	8.45	10	F	INDUCTIVE	R	P	DAL
RER65F8R66&	8.66	10	F	INDUCTIVE	R	P	DAL
RER65F8R87&	8.87	10	F	INDUCTIVE	R	P	DAL
RER65F9R09&	9.09	10	F	INDUCTIVE	R	P	DAL
RER65F9R31&	9.31	10	F	INDUCTIVE	R	P	DAL
RER65F9R53&	9.53	10	F	INDUCTIVE	R	P	DAL
RER65F9R76&	9.76	10	F	INDUCTIVE	R	P	DAL
	Resistance	Power	Resistance		Level 1	Level 2	
Part Number	Value (Ohms)	Rating (W)	Tolerance	Winding	(FRL)(&)	(FRL)(&)	Manufacturer

RER65 Wirewound Resistors: 10.0 Ohms through 97.6 Ohms

	Resistance	Power	Resistance		Level 1	Level 2	
Part Number	Value (Ohms)	Rating (W)	Tolerance	Winding	(FRL)(&)	(FRL)(&)	Manufacturer
RER65F10R0&	10.0	10	F	INDUCTIVE	R	P	DAL
RER65F10R2&	10.2	10	F	INDUCTIVE	R	P	DAL
RER65F10R5&	10.5	10	F	INDUCTIVE	R	P	DAL
RER65F10R7&	10.7	10	F	INDUCTIVE	R	P	DAL
RER65F11R0&	11.0	10	F	INDUCTIVE	R	P	DAL
RER65F11R3&	11.3	10	F	INDUCTIVE	R	P	DAL
RER65F11R5&	11.5	10	F	INDUCTIVE	R	P	DAL
RER65F11R8&	11.8	10	F	INDUCTIVE	R	P	DAL
RER65F12R1&	12.1	10	F	INDUCTIVE	R	P	DAL
RER65F12R4&	12.4	10	F	INDUCTIVE	R	P	DAL
RER65F12R7&	12.7	10	F	INDUCTIVE	R	P	DAL
RER65F13R0&	13.0	10	F	INDUCTIVE	R	P	DAL
RER65F13R3&	13.3	10	F	INDUCTIVE	R	P	DAL
	Resistance	Power	Resistance		Level 1	Level 2	
Part Number	Value (Ohms)	Rating (W)	Tolerance	Winding	(FRL)(&)	(FRL)(&)	Manufacturer

RER65F13R7&	13.7	10	F	INDUCTIVE	R	P	DAL
RER65F14R0&	14.0	10	F	INDUCTIVE	R	P	DAL
RER65F14R3&	14.3	10	F	INDUCTIVE	R	P	DAL
RER65F14R7&	14.7	10	F	INDUCTIVE	R	P	DAL
RER65F15R0&	15.0	10	F	INDUCTIVE	R	P	DAL
RER65F15R4&	15.4	10	F	INDUCTIVE	R	P	DAL
RER65F15R8&	15.8	10	F	INDUCTIVE	R	P	DAL
RER65F16R2&	16.2	10	F	INDUCTIVE	R	P	DAL
RER65F16R5&	16.5	10	F	INDUCTIVE	R	P	DAL
RER65F16R9&	16.9	10	F	INDUCTIVE	R	P	DAL
RER65F17R4&	17.4	10	F	INDUCTIVE	R	P	DAL
RER65F17R8&	17.8	10	F	INDUCTIVE	R	P	DAL
RER65F18R2&	18.2	10	F	INDUCTIVE	R	P	DAL
RER65F18R7&	18.7	10	F	INDUCTIVE	R	P	DAL
	Resistance	Power	Resistance		Level 1	Level 2	
Part Number	Value (Ohms)	Rating (W)	Tolerance	Winding	(FRL)(&)	(FRL)(&)	Manufacturer
RER65F19R1&	19.1	10	F	INDUCTIVE	R	P	DAL
RER65F19R6&	19.6	10	F	INDUCTIVE	R	P	DAL
RER65F20R0&	20.0	10	F	INDUCTIVE	R	P	DAL
RER65F20R5&	20.5	10	F	INDUCTIVE	R	P	DAL
RER65F21R0&	21.0	10	F	INDUCTIVE	R	P	DAL
RER65F21R5&	21.5	10	F	INDUCTIVE	R	P	DAL
RER65F22R1&	22.1	10	F	INDUCTIVE	R	P	DAL
RER65F22R6&	22.6	10	F	INDUCTIVE	R	P	DAL
RER65F23R2&	23.2	10	F	INDUCTIVE	R	P	DAL
RER65F23R7&	23.7	10	F	INDUCTIVE	R	P	DAL
RER65F24R3&	24.3	10	F	INDUCTIVE	R	P	DAL
RER65F24R9&	24.9	10	F	INDUCTIVE	R	P	DAL
RER65F25R5&	25.5	10	F	INDUCTIVE	R	P	DAL
RER65F26R1&	26.1	10	F	INDUCTIVE	R	P	DAL
	Resistance	Power	Resistance		Level 1	Level 2	
Part Number	Value (Ohms)	Rating (W)	Tolerance	Winding	(FRL)(&)	(FRL)(&)	Manufacturer
RER65F26R7&	26.7	10	F	INDUCTIVE	R	P	DAL
RER65F27R4&	27.4	10	F	INDUCTIVE	R	P	DAL
RER65F28R0&	28.0	10	F	INDUCTIVE	R	P	DAL
RER65F28R7&	28.7	10	F	INDUCTIVE	R	P	DAL
RER65F29R4&	29.4	10	F	INDUCTIVE	R	P	DAL
RER65F30R1&	30.1	10	F	INDUCTIVE	R	P	DAL
RER65F30R9&	30.9	10	F	INDUCTIVE	R	P	DAL
RER65F31R6&	31.6	10	F	INDUCTIVE	R	P	DAL
RER65F32R4&	32.4	10	F	INDUCTIVE	R	P	DAL
RER65F33R2&	33.2	10	F	INDUCTIVE	R	P	DAL
RER65F34R0&	34.0	10	F	INDUCTIVE	R	P	DAL
RER65F34R8&	34.8	10	F	INDUCTIVE	R	P	DAL
RER65F35R7&	35.7	10	F	INDUCTIVE	R	P	DAL
RER65F36R5&	36.5	10	F	INDUCTIVE	R	P	DAL
	Resistance	Power	Resistance		Level 1	Level 2	

Part Number	Value (Ohms)	Rating (W)	Tolerance	Winding	(FRL)(&)	(FRL)(&)	Manufacturer
RER65F37R4&	37.4	10	F	INDUCTIVE	R	P	DAL
RER65F38R3&	38.3	10	F	INDUCTIVE	R	P	DAL
RER65F39R2&	39.2	10	F	INDUCTIVE	R	P	DAL
RER65F40R2&	40.2	10	F	INDUCTIVE	R	P	DAL
RER65F41R2&	41.2	10	F	INDUCTIVE	R	P	DAL
RER65F42R2&	42.2	10	F	INDUCTIVE	R	P	DAL
RER65F43R2&	43.2	10	F	INDUCTIVE	R	P	DAL
RER65F44R2&	44.2	10	F	INDUCTIVE	R	P	DAL
RER65F45R3&	45.3	10	F	INDUCTIVE	R	P	DAL
RER65F46R4&	46.4	10	F	INDUCTIVE	R	P	DAL
RER65F47R5&	47.5	10	F	INDUCTIVE	R	P	DAL
RER65F48R7&	48.7	10	F	INDUCTIVE	R	P	DAL
RER65F49R9&	49.9	10	F	INDUCTIVE	R	P	DAL
RER65F51R1&	51.1	10	F	INDUCTIVE	R	P	DAL
	Resistance	Power	Resistance		Level 1	Level 2	
Part Number	Value (Ohms)	Rating (W)	Tolerance	Winding	(FRL)(&)	(FRL)(&)	Manufacturer
RER65F52R3&	52.3	10	F	INDUCTIVE	R	P	DAL
RER65F53R6&	53.6	10	F	INDUCTIVE	R	P	DAL
RER65F54R9&	54.9	10	F	INDUCTIVE	R	P	DAL
RER65F56R2&	56.2	10	F	INDUCTIVE	R	P	DAL
RER65F57R6&	57.6	10	F	INDUCTIVE	R	P	DAL
RER65F59R0&	59.0	10	F	INDUCTIVE	R	P	DAL
RER65F60R4&	60.4	10	F	INDUCTIVE	R	P	DAL
RER65F61R9&	61.9	10	F	INDUCTIVE	R	P	DAL
RER65F63R4&	63.4	10	F	INDUCTIVE	R	P	DAL
RER65F64R9&	64.9	10	F	INDUCTIVE	R	P	DAL
RER65F66R5&	66.5	10	F	INDUCTIVE	R	P	DAL
RER65F68R1&	68.1	10	F	INDUCTIVE	R	P	DAL
RER65F69R8&	69.8	10	F	INDUCTIVE	R	P	DAL
	Resistance	Power	Resistance		Level 1	Level 2	
Part Number	Value (Ohms)	Rating (W)	Tolerance	Winding	(FRL)(&)	(FRL)(&)	Manufacturer
RER65F71R5&	71.5	10	F	INDUCTIVE	R	P	DAL
RER65F73R2&	73.2	10	F	INDUCTIVE	R	P	DAL
RER65F75R0&	75.0	10	F	INDUCTIVE	R	P	DAL
RER65F76R8&	76.8	10	F	INDUCTIVE	R	P	DAL
RER65F78R7&	78.7	10	F	INDUCTIVE	R	P	DAL
RER65F80R6&	80.6	10	F	INDUCTIVE	R	P	DAL
RER65F82R5&	82.5	10	F	INDUCTIVE	R	P	DAL
RER65F84R5&	84.5	10	F	INDUCTIVE	R	P	DAL
RER65F86R6&	86.6	10	F	INDUCTIVE	R	P	DAL
RER65F88R7&	88.7	10	F	INDUCTIVE	R	P	DAL
RER65F90R9&	90.9	10	F	INDUCTIVE	R	P	DAL
RER65F93R1&	93.1	10	F	INDUCTIVE	R	P	DAL
RER65F95R3&	95.3	10	F	INDUCTIVE	R	P	DAL
RER65F97R6&	97.6	10	F	INDUCTIVE	R	P	DAL
	Resistance	Power	Resistance		Level 1	Level 2	

Part Number	Value (Ohms)	Rating (W)	Tolerance	Winding	(FRL)(&)	(FRL)(&)	Manufacturer

RER65 Wirewound Resistors: 100 Ohms through 976 Ohms

	Resistance	Power	Resistance		Level 1	Level 2	
Part Number	Value (Ohms)	Rating (W)	Tolerance	Winding	(FRL)(&)	(FRL)(&)	Manufacturer
RER65F100R&	100	10	F	INDUCTIVE	R	P	DAL
RER65F102R&	102	10	F	INDUCTIVE	R	P	DAL
RER65F105R&	105	10	F	INDUCTIVE	R	P	DAL
RER65F107R&	107	10	F	INDUCTIVE	R	P	DAL
RER65F110R&	110	10	F	INDUCTIVE	R	P	DAL
RER65F113R&	113	10	F	INDUCTIVE	R	P	DAL
RER65F115R&	115	10	F	INDUCTIVE	R	P	DAL
RER65F118R&	118	10	F	INDUCTIVE	R	P	DAL
RER65F121R&	121	10	F	INDUCTIVE	R	P	DAL
RER65F124R&	124	10	F	INDUCTIVE	R	P	DAL
RER65F127R&	127	10	F	INDUCTIVE	R	P	DAL
RER65F130R&	130	10	F	INDUCTIVE	R	P	DAL
RER65F133R&	133	10	F	INDUCTIVE	R	P	DAL
	Resistance	Power	Resistance		Level 1	Level 2	
Part Number	Value (Ohms)	Rating (W)	Tolerance	Winding	(FRL)(&)	(FRL)(&)	Manufacturer
RER65F137R&	137	10	F	INDUCTIVE	R	P	DAL
RER65F140R&	140	10	F	INDUCTIVE	R	P	DAL
RER65F143R&	143	10	F	INDUCTIVE	R	P	DAL
RER65F147R&	147	10	F	INDUCTIVE	R	P	DAL
RER65F150R&	150	10	F	INDUCTIVE	R	P	DAL
RER65F154R&	154	10	F	INDUCTIVE	R	P	DAL
RER65F158R&	158	10	F	INDUCTIVE	R	P	DAL
RER65F162R&	162	10	F	INDUCTIVE	R	P	DAL
RER65F165R&	165	10	F	INDUCTIVE	R	P	DAL
RER65F169R&	169	10	F	INDUCTIVE	R	P	DAL
RER65F174R&	174	10	F	INDUCTIVE	R	P	DAL
RER65F178R&	178	10	F	INDUCTIVE	R	P	DAL
RER65F182R&	182	10	F	INDUCTIVE	R	P	DAL
RER65F187R&	187	10	F	INDUCTIVE	R	P	DAL
	Resistance	Power	Resistance		Level 1	Level 2	
Part Number	Value (Ohms)	Rating (W)	Tolerance	Winding	(FRL)(&)	(FRL)(&)	Manufacturer
RER65F191R&	191	10	F	INDUCTIVE	R	P	DAL
RER65F196R&	196	10	F	INDUCTIVE	R	P	DAL
RER65F200R&	200	10	F	INDUCTIVE	R	P	DAL
RER65F205R&	205	10	F	INDUCTIVE	R	P	DAL
RER65F210R&	210	10	F	INDUCTIVE	R	P	DAL
RER65F215R&	215	10	F	INDUCTIVE	R	P	DAL
RER65F221R&	221	10	F	INDUCTIVE	R	P	DAL
RER65F226R&	226	10	F	INDUCTIVE	R	P	DAL

RER65F232R&	232	10	F	INDUCTIVE	R	P	DAL
RER65F237R&	237	10	F	INDUCTIVE	R	P	DAL
RER65F243R&	243	10	F	INDUCTIVE	R	P	DAL
RER65F249R&	249	10	F	INDUCTIVE	R	P	DAL
RER65F255R&	255	10	F	INDUCTIVE	R	P	DAL
RER65F261R&	261	10	F	INDUCTIVE	R	P	DAL
	Resistance	Power	Resistance		Level 1	Level 2	
Part Number	Value (Ohms)	Rating (W)	Tolerance	Winding	(FRL)(&)	(FRL)(&)	Manufacturer
RER65F267R&	267	10	F	INDUCTIVE	R	P	DAL
RER65F274R&	274	10	F	INDUCTIVE	R	P	DAL
RER65F280R&	280	10	F	INDUCTIVE	R	P	DAL
RER65F287R&	287	10	F	INDUCTIVE	R	P	DAL
RER65F294R&	294	10	F	INDUCTIVE	R	P	DAL
RER65F301R&	301	10	F	INDUCTIVE	R	P	DAL
RER65F309R&	309	10	F	INDUCTIVE	R	P	DAL
RER65F316R&	316	10	F	INDUCTIVE	R	P	DAL
RER65F324R&	324	10	F	INDUCTIVE	R	P	DAL
RER65F332R&	332	10	F	INDUCTIVE	R	P	DAL
RER65F340R&	340	10	F	INDUCTIVE	R	P	DAL
RER65F348R&	348	10	F	INDUCTIVE	R	P	DAL
RER65F357R&	357	10	F	INDUCTIVE	R	P	DAL
RER65F365R&	365	10	F	INDUCTIVE	R	P	DAL
	Resistance	Power	Resistance		Level 1	Level 2	
Part Number	Value (Ohms)	Rating (W)	Tolerance	Winding	(FRL)(&)	(FRL)(&)	Manufacturer
RER65F374R&	374	10	F	INDUCTIVE	R	P	DAL
RER65F383R&	383	10	F	INDUCTIVE	R	P	DAL
RER65F392R&	392	10	F	INDUCTIVE	R	P	DAL
RER65F402R&	402	10	F	INDUCTIVE	R	P	DAL
RER65F412R&	412	10	F	INDUCTIVE	R	P	DAL
RER65F422R&	422	10	F	INDUCTIVE	R	P	DAL
RER65F432R&	432	10	F	INDUCTIVE	R	P	DAL
RER65F442R&	442	10	F	INDUCTIVE	R	P	DAL
RER65F453R&	453	10	F	INDUCTIVE	R	P	DAL
RER65F464R&	464	10	F	INDUCTIVE	R	P	DAL
RER65F475R&	475	10	F	INDUCTIVE	R	P	DAL
RER65F487R&	487	10	F	INDUCTIVE	R	P	DAL
RER65F499R&	499	10	F	INDUCTIVE	R	P	DAL
RER65F511R&	511	10	F	INDUCTIVE	R	P	DAL
	Resistance	Power	Resistance		Level 1	Level 2	
Part Number	Value (Ohms)	Rating (W)	Tolerance	Winding	(FRL)(&)	(FRL)(&)	Manufacturer
RER65F523R&	523	10	F	INDUCTIVE	R	P	DAL
RER65F536R&	536	10	F	INDUCTIVE	R	P	DAL
RER65F549R&	549	10	F	INDUCTIVE	R	P	DAL
RER65F562R&	562	10	F	INDUCTIVE	R	P	DAL
RER65F576R&	576	10	F	INDUCTIVE	R	P	DAL
RER65F590R&	590	10	F	INDUCTIVE	R	P	DAL
RER65F604R&	604	10	F	INDUCTIVE	R	P	DAL

RER65F619R&	619	10	F	INDUCTIVE	R	P	DAL
RER65F634R&	634	10	F	INDUCTIVE	R	P	DAL
RER65F649R&	649	10	F	INDUCTIVE	R	P	DAL
RER65F665R&	665	10	F	INDUCTIVE	R	P	DAL
RER65F681R&	681	10	F	INDUCTIVE	R	P	DAL
RER65F698R&	698	10	F	INDUCTIVE	R	P	DAL
	Resistance	Power	Resistance		Level 1	Level 2	
Part Number	Value (Ohms)	Rating (W)	Tolerance	Winding	(FRL)(&)	(FRL)(&)	Manufacturer
RER65F715R&	715	10	F	INDUCTIVE	R	P	DAL
RER65F732R&	732	10	F	INDUCTIVE	R	P	DAL
RER65F750R&	750	10	F	INDUCTIVE	R	P	DAL
RER65F768R&	768	10	F	INDUCTIVE	R	P	DAL
RER65F787R&	787	10	F	INDUCTIVE	R	P	DAL
RER65F806R&	806	10	F	INDUCTIVE	R	P	DAL
RER65F825R&	825	10	F	INDUCTIVE	R	P	DAL
RER65F845R&	845	10	F	INDUCTIVE	R	P	DAL
RER65F866R&	866	10	F	INDUCTIVE	R	P	DAL
RER65F887R&	887	10	F	INDUCTIVE	R	P	DAL
RER65F909R&	909	10	F	INDUCTIVE	R	P	DAL
RER65F931R&	931	10	F	INDUCTIVE	R	P	DAL
RER65F953R&	953	10	F	INDUCTIVE	R	P	DAL
RER65F976R&	976	10	F	INDUCTIVE	R	P	DAL
	Resistance	Power	Resistance		Level 1	Level 2	
Part Number	Value (Ohms)	Rating (W)	Tolerance	Winding	(FRL)(&)	(FRL)(&)	Manufacturer

RER65 Wirewound Resistors: 1000 Ohms through 5620 Ohms

	Resistance	Power	Resistance		Level 1	Level 2	
Part Number	Value (Ohms)	Rating (W)	Tolerance	Winding	(FRL)(&)	(FRL)(&)	Manufacturer
RER65F1001&	1,000	10	F	INDUCTIVE	R	P	DAL
RER65F1021&	1,020	10	F	INDUCTIVE	R	P	DAL
RER65F1051&	1,050	10	F	INDUCTIVE	R	P	DAL
RER65F1071&	1,070	10	F	INDUCTIVE	R	P	DAL
RER65F1101&	1,100	10	F	INDUCTIVE	R	P	DAL
RER65F1131&	1,130	10	F	INDUCTIVE	R	P	DAL
RER65F1151&	1,150	10	F	INDUCTIVE	R	P	DAL
RER65F1181&	1,180	10	F	INDUCTIVE	R	P	DAL
RER65F1211&	1,210	10	F	INDUCTIVE	R	P	DAL
RER65F1241&	1,240	10	F	INDUCTIVE	R	P	DAL
RER65F1271&	1,270	10	F	INDUCTIVE	R	P	DAL
RER65F1301&	1,300	10	F	INDUCTIVE	R	P	DAL
RER65F1331&	1,330	10	F	INDUCTIVE	R	P	DAL
	Resistance	Power	Resistance		Level 1	Level 2	
Part Number	Value (Ohms)	Rating (W)	Tolerance	Winding	(FRL)(&)	(FRL)(&)	Manufacturer
RER65F1371&	1,370	10	F	INDUCTIVE	R	P	DAL

RER65F1401&	1,400	10	F	INDUCTIVE	R	P	DAL
RER65F1431&	1,430	10	F	INDUCTIVE	R	P	DAL
RER65F1471&	1,470	10	F	INDUCTIVE	R	P	DAL
RER65F1501&	1,500	10	F	INDUCTIVE	R	P	DAL
RER65F1541&	1,540	10	F	INDUCTIVE	R	P	DAL
RER65F1581&	1,580	10	F	INDUCTIVE	R	P	DAL
RER65F1621&	1,620	10	F	INDUCTIVE	R	P	DAL
RER65F1651&	1,650	10	F	INDUCTIVE	R	P	DAL
RER65F1691&	1,690	10	F	INDUCTIVE	R	P	DAL
RER65F1741&	1,740	10	F	INDUCTIVE	R	P	DAL
RER65F1781&	1,780	10	F	INDUCTIVE	R	P	DAL
RER65F1821&	1,820	10	F	INDUCTIVE	R	P	DAL
RER65F1871&	1,870	10	F	INDUCTIVE	R	P	DAL
	Resistance	Power	Resistance		Level 1	Level 2	
Part Number	Value (Ohms)	Rating (W)	Tolerance	Winding	(FRL)(&)	(FRL)(&)	Manufacturer
RER65F1911&	1,910	10	F	INDUCTIVE	R	P	DAL
RER65F1961&	1,960	10	F	INDUCTIVE	R	P	DAL
RER65F2001&	2,000	10	F	INDUCTIVE	R	P	DAL
RER65F2051&	2,050	10	F	INDUCTIVE	R	P	DAL
RER65F2101&	2,100	10	F	INDUCTIVE	R	P	DAL
RER65F2151&	2,150	10	F	INDUCTIVE	R	P	DAL
RER65F2211&	2,210	10	F	INDUCTIVE	R	P	DAL
RER65F2261&	2,260	10	F	INDUCTIVE	R	P	DAL
RER65F2321&	2,320	10	F	INDUCTIVE	R	P	DAL
RER65F2371&	2,370	10	F	INDUCTIVE	R	P	DAL
RER65F2431&	2,430	10	F	INDUCTIVE	R	P	DAL
RER65F2491&	2,490	10	F	INDUCTIVE	R	P	DAL
RER65F2551&	2,550	10	F	INDUCTIVE	R	P	DAL
RER65F2611&	2,610	10	F	INDUCTIVE	R	P	DAL
	Resistance	Power	Resistance		Level 1	Level 2	
Part Number	Value (Ohms)	Rating (W)	Tolerance	Winding	(FRL)(&)	(FRL)(&)	Manufacturer
RER65F2671&	2,670	10	F	INDUCTIVE	R	P	DAL
RER65F2741&	2,740	10	F	INDUCTIVE	R	P	DAL
RER65F2801&	2,800	10	F	INDUCTIVE	R	P	DAL
RER65F2871&	2,870	10	F	INDUCTIVE	R	P	DAL
RER65F2941&	2,940	10	F	INDUCTIVE	R	P	DAL
RER65F3011&	3,010	10	F	INDUCTIVE	R	P	DAL
RER65F3091&	3,090	10	F	INDUCTIVE	R	P	DAL
RER65F3161&	3,160	10	F	INDUCTIVE	R	P	DAL
RER65F3241&	3,240	10	F	INDUCTIVE	R	P	DAL
RER65F3321&	3,320	10	F	INDUCTIVE	R	P	DAL
RER65F3401&	3,400	10	F	INDUCTIVE	R	P	DAL
RER65F3481&	3,480	10	F	INDUCTIVE	R	P	DAL
RER65F3571&	3,570	10	F	INDUCTIVE	R	P	DAL
RER65F3651&	3,650	10	F	INDUCTIVE	R	P	DAL
	Resistance	Power	Resistance		Level 1	Level 2	
Part Number	Value (Ohms)	Rating (W)	Tolerance	Winding	(FRL)(&)	(FRL)(&)	Manufacturer

RER65F3741&	3,740	10	F	INDUCTIVE	R	P	DAL
RER65F3831&	3,830	10	F	INDUCTIVE	R	P	DAL
RER65F3921&	3,920	10	F	INDUCTIVE	R	P	DAL
RER65F4021&	4,020	10	F	INDUCTIVE	R	P	DAL
RER65F4121&	4,120	10	F	INDUCTIVE	R	P	DAL
RER65F4221&	4,220	10	F	INDUCTIVE	R	P	DAL
RER65F4321&	4,320	10	F	INDUCTIVE	R	P	DAL
RER65F4421&	4,420	10	F	INDUCTIVE	R	P	DAL
RER65F4531&	4,530	10	F	INDUCTIVE	R	P	DAL
RER65F4641&	4,640	10	F	INDUCTIVE	R	P	DAL
RER65F4751&	4,750	10	F	INDUCTIVE	R	P	DAL
RER65F4871&	4,870	10	F	INDUCTIVE	R	P	DAL
RER65F4991&	4,990	10	F	INDUCTIVE	R	P	DAL
RER65F5111&	5,110	10	F	INDUCTIVE	R	P	DAL
	Resistance	Power	Resistance		Level 1	Level 2	
Part Number	Value (Ohms)	Rating (W)	Tolerance	Winding	(FRL)(&)	(FRL)(&)	Manufacturer
RER65F5231&	5,230	10	F	INDUCTIVE	R	P	DAL
RER65F5361&	5,360	10	F	INDUCTIVE	R	P	DAL
RER65F5491&	5,490	10	F	INDUCTIVE	R	P	DAL
RER65F5621&	5,620	10	F	INDUCTIVE	R	P	DAL

RER70 Wirewound Resistors

	Resistance	Power	Resistance		Level 1	Level 2	
Part Number	Value (Ohms)	Rating (W)	Tolerance	Winding	(FRL)(&)	(FRL)(&)	Manufacturer
RER70FR100&	0.100	20	F	INDUCTIVE	R	P	DAL
RER70FR102&	0.102	20	F	INDUCTIVE	R	P	DAL
RER70FR105&	0.105	20	F	INDUCTIVE	R	P	DAL
RER70FR107&	0.107	20	F	INDUCTIVE	R	P	DAL
RER70FR110&	0.110	20	F	INDUCTIVE	R	P	DAL
RER70FR113&	0.113	20	F	INDUCTIVE	R	P	DAL
RER70FR115&	0.115	20	F	INDUCTIVE	R	P	DAL
RER70FR118&	0.118	20	F	INDUCTIVE	R	P	DAL
RER70FR121&	0.121	20	F	INDUCTIVE	R	P	DAL
RER70FR124&	0.124	20	F	INDUCTIVE	R	P	DAL
RER70FR127&	0.127	20	F	INDUCTIVE	R	P	DAL
RER70FR130&	0.130	20	F	INDUCTIVE	R	P	DAL
RER70FR133&	0.133	20	F	INDUCTIVE	R	P	DAL
RER70FR137&	0.137	20	F	INDUCTIVE	R	P	DAL
RER70FR140&	0.140	20	F	INDUCTIVE	R	P	DAL
RER70FR143&	0.143	20	F	INDUCTIVE	R	P	DAL
RER70FR147&	0.147	20	F	INDUCTIVE	R	P	DAL
RER70FR150&	0.150	20	F	INDUCTIVE	R	P	DAL
RER70FR154&	0.154	20	F	INDUCTIVE	R	P	DAL
RER70FR158&	0.158	20	F	INDUCTIVE	R	P	DAL

RER70FR162&	0.162	20	F	INDUCTIVE	R	P	DAL
RER70FR165&	0.165	20	F	INDUCTIVE	R	P	DAL
RER70FR169&	0.169	20	F	INDUCTIVE	R	P	DAL
RER70FR174&	0.174	20	F	INDUCTIVE	R	P	DAL
RER70FR178&	0.178	20	F	INDUCTIVE	R	P	DAL
RER70FR182&	0.182	20	F	INDUCTIVE	R	P	DAL
RER70FR187&	0.187	20	F	INDUCTIVE	R	P	DAL
RER70FR191&	0.191	20	F	INDUCTIVE	R	P	DAL
RER70FR196&	0.196	20	F	INDUCTIVE	R	P	DAL
RER70FR200&	0.200	20	F	INDUCTIVE	R	P	DAL
RER70FR205&	0.205	20	F	INDUCTIVE	R	P	DAL
RER70FR210&	0.210	20	F	INDUCTIVE	R	P	DAL
RER70FR215&	0.215	20	F	INDUCTIVE	R	P	DAL
RER70FR221&	0.221	20	F	INDUCTIVE	R	P	DAL
RER70FR226&	0.226	20	F	INDUCTIVE	R	P	DAL
RER70FR232&	0.232	20	F	INDUCTIVE	R	P	DAL
RER70FR237&	0.237	20	F	INDUCTIVE	R	P	DAL
RER70FR243&	0.243	20	F	INDUCTIVE	R	P	DAL
RER70FR249&	0.249	20	F	INDUCTIVE	R	P	DAL
RER70FR255&	0.255	20	F	INDUCTIVE	R	P	DAL
RER70FR261&	0.261	20	F	INDUCTIVE	R	P	DAL
RER70FR267&	0.267	20	F	INDUCTIVE	R	P	DAL
RER70FR274&	0.274	20	F	INDUCTIVE	R	P	DAL
RER70FR280&	0.280	20	F	INDUCTIVE	R	P	DAL
RER70FR287&	0.287	20	F	INDUCTIVE	R	P	DAL
RER70FR294&	0.294	20	F	INDUCTIVE	R	P	DAL
RER70FR301&	0.301	20	F	INDUCTIVE	R	P	DAL
RER70FR309&	0.309	20	F	INDUCTIVE	R	P	DAL
RER70FR316&	0.316	20	F	INDUCTIVE	R	P	DAL
RER70FR324&	0.324	20	F	INDUCTIVE	R	P	DAL
RER70FR332&	0.332	20	F	INDUCTIVE	R	P	DAL
RER70FR340&	0.340	20	F	INDUCTIVE	R	P	DAL
RER70FR348&	0.348	20	F	INDUCTIVE	R	P	DAL
RER70FR357&	0.357	20	F	INDUCTIVE	R	P	DAL
RER70FR365&	0.365	20	F	INDUCTIVE	R	P	DAL
RER70FR374&	0.374	20	F	INDUCTIVE	R	P	DAL
RER70FR383&	0.383	20	F	INDUCTIVE	R	P	DAL
RER70FR392&	0.392	20	F	INDUCTIVE	R	P	DAL
RER70FR402&	0.402	20	F	INDUCTIVE	R	P	DAL
RER70FR412&	0.412	20	F	INDUCTIVE	R	P	DAL
RER70FR422&	0.422	20	F	INDUCTIVE	R	P	DAL
RER70FR432&	0.432	20	F	INDUCTIVE	R	P	DAL
RER70FR442&	0.442	20	F	INDUCTIVE	R	P	DAL
RER70FR453&	0.453	20	F	INDUCTIVE	R	P	DAL
RER70FR464&	0.464	20	F	INDUCTIVE	R	P	DAL
RER70FR475&	0.475	20	F	INDUCTIVE	R	P	DAL
RER70FR487&	0.487	20	F	INDUCTIVE	R	P	DAL

RER70FR499&	0.499	20	F	INDUCTIVE	R	P	DAL
RER70FR511&	0.511	20	F	INDUCTIVE	R	P	DAL
RER70FR523&	0.523	20	F	INDUCTIVE	R	P	DAL
RER70FR536&	0.536	20	F	INDUCTIVE	R	P	DAL
RER70FR549&	0.549	20	F	INDUCTIVE	R	P	DAL
RER70FR562&	0.562	20	F	INDUCTIVE	R	P	DAL
RER70FR576&	0.576	20	F	INDUCTIVE	R	P	DAL
RER70FR590&	0.590	20	F	INDUCTIVE	R	P	DAL
RER70FR604&	0.604	20	F	INDUCTIVE	R	P	DAL
RER70FR619&	0.619	20	F	INDUCTIVE	R	P	DAL
RER70FR634&	0.634	20	F	INDUCTIVE	R	P	DAL
RER70FR649&	0.649	20	F	INDUCTIVE	R	P	DAL
RER70FR665&	0.665	20	F	INDUCTIVE	R	P	DAL
RER70FR681&	0.681	20	F	INDUCTIVE	R	P	DAL
RER70FR698&	0.698	20	F	INDUCTIVE	R	P	DAL
RER70FR715&	0.715	20	F	INDUCTIVE	R	P	DAL
RER70FR732&	0.732	20	F	INDUCTIVE	R	P	DAL
RER70FR750&	0.750	20	F	INDUCTIVE	R	P	DAL
RER70FR768&	0.768	20	F	INDUCTIVE	R	P	DAL
RER70FR787&	0.787	20	F	INDUCTIVE	R	P	DAL
RER70FR806&	0.806	20	F	INDUCTIVE	R	P	DAL
RER70FR825&	0.825	20	F	INDUCTIVE	R	P	DAL
RER70FR845&	0.845	20	F	INDUCTIVE	R	P	DAL
RER70FR866&	0.866	20	F	INDUCTIVE	R	P	DAL
RER70FR887&	0.887	20	F	INDUCTIVE	R	P	DAL
RER70FR909&	0.909	20	F	INDUCTIVE	R	P	DAL
RER70FR931&	0.931	20	F	INDUCTIVE	R	P	DAL
RER70FR953&	0.953	20	F	INDUCTIVE	R	P	DAL
RER70FR976&	0.976	20	F	INDUCTIVE	R	P	DAL
RER70F1R00&	1.00	20	F	INDUCTIVE	R	P	DAL
RER70F1R02&	1.02	20	F	INDUCTIVE	R	P	DAL
RER70F1R05&	1.05	20	F	INDUCTIVE	R	P	DAL
RER70F1R07&	1.07	20	F	INDUCTIVE	R	P	DAL
RER70F1R10&	1.10	20	F	INDUCTIVE	R	P	DAL
RER70F1R13&	1.13	20	F	INDUCTIVE	R	P	DAL
RER70F1R15&	1.15	20	F	INDUCTIVE	R	P	DAL
RER70F1R18&	1.18	20	F	INDUCTIVE	R	P	DAL
RER70F1R21&	1.21	20	F	INDUCTIVE	R	P	DAL
RER70F1R24&	1.24	20	F	INDUCTIVE	R	P	DAL
RER70F1R27&	1.27	20	F	INDUCTIVE	R	P	DAL
RER70F1R30&	1.30	20	F	INDUCTIVE	R	P	DAL
RER70F1R33&	1.33	20	F	INDUCTIVE	R	P	DAL
RER70F1R37&	1.37	20	F	INDUCTIVE	R	P	DAL
RER70F1R40&	1.40	20	F	INDUCTIVE	R	P	DAL
RER70F1R43&	1.43	20	F	INDUCTIVE	R	P	DAL
RER70F1R47&	1.47	20	F	INDUCTIVE	R	P	DAL
RER70F1R50&	1.50	20	F	INDUCTIVE	R	P	DAL

RER70F1R54&	1.54	20	F	INDUCTIVE	R	P	DAL
RER70F1R58&	1.58	20	F	INDUCTIVE	R	P	DAL
RER70F1R62&	1.62	20	F	INDUCTIVE	R	P	DAL
RER70F1R65&	1.65	20	F	INDUCTIVE	R	P	DAL
RER70F1R69&	1.69	20	F	INDUCTIVE	R	P	DAL
RER70F1R74&	1.74	20	F	INDUCTIVE	R	P	DAL
RER70F1R78&	1.78	20	F	INDUCTIVE	R	P	DAL
RER70F1R82&	1.82	20	F	INDUCTIVE	R	P	DAL
RER70F1R87&	1.87	20	F	INDUCTIVE	R	P	DAL
RER70F1R91&	1.91	20	F	INDUCTIVE	R	P	DAL
RER70F1R96&	1.96	20	F	INDUCTIVE	R	P	DAL
RER70F2R00&	2.00	20	F	INDUCTIVE	R	P	DAL
RER70F2R05&	2.05	20	F	INDUCTIVE	R	P	DAL
RER70F2R10&	2.10	20	F	INDUCTIVE	R	P	DAL
RER70F2R15&	2.15	20	F	INDUCTIVE	R	P	DAL
RER70F2R21&	2.21	20	F	INDUCTIVE	R	P	DAL
RER70F2R26&	2.26	20	F	INDUCTIVE	R	P	DAL
RER70F2R32&	2.32	20	F	INDUCTIVE	R	P	DAL
RER70F2R37&	2.37	20	F	INDUCTIVE	R	P	DAL
RER70F2R43&	2.43	20	F	INDUCTIVE	R	P	DAL
RER70F2R49&	2.49	20	F	INDUCTIVE	R	P	DAL
RER70F2R55&	2.55	20	F	INDUCTIVE	R	P	DAL
RER70F2R61&	2.61	20	F	INDUCTIVE	R	P	DAL
RER70F2R67&	2.67	20	F	INDUCTIVE	R	P	DAL
RER70F2R74&	2.74	20	F	INDUCTIVE	R	P	DAL
RER70F2R80&	2.80	20	F	INDUCTIVE	R	P	DAL
RER70F2R87&	2.87	20	F	INDUCTIVE	R	P	DAL
RER70F2R94&	2.94	20	F	INDUCTIVE	R	P	DAL
RER70F3R01&	3.01	20	F	INDUCTIVE	R	P	DAL
RER70F3R09&	3.09	20	F	INDUCTIVE	R	P	DAL
RER70F3R16&	3.16	20	F	INDUCTIVE	R	P	DAL
RER70F3R24&	3.24	20	F	INDUCTIVE	R	P	DAL
RER70F3R32&	3.32	20	F	INDUCTIVE	R	P	DAL
RER70F3R40&	3.40	20	F	INDUCTIVE	R	P	DAL
RER70F3R48&	3.48	20	F	INDUCTIVE	R	P	DAL
RER70F3R57&	3.57	20	F	INDUCTIVE	R	P	DAL
RER70F3R65&	3.65	20	F	INDUCTIVE	R	P	DAL
RER70F3R74&	3.74	20	F	INDUCTIVE	R	P	DAL
RER70F3R83&	3.83	20	F	INDUCTIVE	R	P	DAL
RER70F3R92&	3.92	20	F	INDUCTIVE	R	P	DAL
RER70F4R02&	4.02	20	F	INDUCTIVE	R	P	DAL
RER70F4R12&	4.12	20	F	INDUCTIVE	R	P	DAL
RER70F4R22&	4.22	20	F	INDUCTIVE	R	P	DAL
RER70F4R32&	4.32	20	F	INDUCTIVE	R	P	DAL
RER70F4R42&	4.42	20	F	INDUCTIVE	R	P	DAL
RER70F4R53&	4.53	20	F	INDUCTIVE	R	P	DAL
RER70F4R64&	4.64	20	F	INDUCTIVE	R	P	DAL

RER70F4R75&	4.75	20	F	INDUCTIVE	R	P	DAL
RER70F4R87&	4.87	20	F	INDUCTIVE	R	P	DAL
RER70F4R99&	4.99	20	F	INDUCTIVE	R	P	DAL
RER70F5R11&	5.11	20	F	INDUCTIVE	R	P	DAL
RER70F5R23&	5.23	20	F	INDUCTIVE	R	P	DAL
RER70F5R36&	5.36	20	F	INDUCTIVE	R	P	DAL
RER70F5R49&	5.49	20	F	INDUCTIVE	R	P	DAL
RER70F5R62&	5.62	20	F	INDUCTIVE	R	P	DAL
RER70F5R76&	5.76	20	F	INDUCTIVE	R	P	DAL
RER70F5R90&	5.90	20	F	INDUCTIVE	R	P	DAL
RER70F6R04&	6.04	20	F	INDUCTIVE	R	P	DAL
RER70F6R19&	6.19	20	F	INDUCTIVE	R	P	DAL
RER70F6R34&	6.34	20	F	INDUCTIVE	R	P	DAL
RER70F6R49&	6.49	20	F	INDUCTIVE	R	P	DAL
RER70F6R65&	6.65	20	F	INDUCTIVE	R	P	DAL
RER70F6R81&	6.81	20	F	INDUCTIVE	R	P	DAL
RER70F6R98&	6.98	20	F	INDUCTIVE	R	P	DAL
RER70F7R15&	7.15	20	F	INDUCTIVE	R	P	DAL
RER70F7R32&	7.32	20	F	INDUCTIVE	R	P	DAL
RER70F7R50&	7.50	20	F	INDUCTIVE	R	P	DAL
RER70F7R68&	7.68	20	F	INDUCTIVE	R	P	DAL
RER70F7R87&	7.87	20	F	INDUCTIVE	R	P	DAL
RER70F8R06&	8.06	20	F	INDUCTIVE	R	P	DAL
RER70F8R25&	8.25	20	F	INDUCTIVE	R	P	DAL
RER70F8R45&	8.45	20	F	INDUCTIVE	R	P	DAL
RER70F8R66&	8.66	20	F	INDUCTIVE	R	P	DAL
RER70F8R87&	8.87	20	F	INDUCTIVE	R	P	DAL
RER70F9R09&	9.09	20	F	INDUCTIVE	R	P	DAL
RER70F9R31&	9.31	20	F	INDUCTIVE	R	P	DAL
RER70F9R53&	9.53	20	F	INDUCTIVE	R	P	DAL
RER70F9R76&	9.76	20	F	INDUCTIVE	R	P	DAL
RER70F10R0&	10.0	20	F	INDUCTIVE	R	P	DAL
RER70F10R2&	10.2	20	F	INDUCTIVE	R	P	DAL
RER70F10R5&	10.5	20	F	INDUCTIVE	R	P	DAL
RER70F10R7&	10.7	20	F	INDUCTIVE	R	P	DAL
RER70F11R0&	11.0	20	F	INDUCTIVE	R	P	DAL
RER70F11R3&	11.3	20	F	INDUCTIVE	R	P	DAL
RER70F11R5&	11.5	20	F	INDUCTIVE	R	P	DAL
RER70F11R8&	11.8	20	F	INDUCTIVE	R	P	DAL
RER70F12R1&	12.1	20	F	INDUCTIVE	R	P	DAL
RER70F12R4&	12.4	20	F	INDUCTIVE	R	P	DAL
RER70F12R7&	12.7	20	F	INDUCTIVE	R	P	DAL
RER70F13R0&	13.0	20	F	INDUCTIVE	R	P	DAL
RER70F13R3&	13.3	20	F	INDUCTIVE	R	P	DAL
RER70F13R7&	13.7	20	F	INDUCTIVE	R	P	DAL
RER70F14R0&	14.0	20	F	INDUCTIVE	R	P	DAL
RER70F14R3&	14.3	20	F	INDUCTIVE	R	P	DAL

RER70F14R7&	14.7	20	F	INDUCTIVE	R	P	DAL
RER70F15R0&	15.0	20	F	INDUCTIVE	R	P	DAL
RER70F15R4&	15.4	20	F	INDUCTIVE	R	P	DAL
RER70F15R8&	15.8	20	F	INDUCTIVE	R	P	DAL
RER70F16R2&	16.2	20	F	INDUCTIVE	R	P	DAL
RER70F16R5&	16.5	20	F	INDUCTIVE	R	P	DAL
RER70F16R9&	16.9	20	F	INDUCTIVE	R	P	DAL
RER70F17R4&	17.4	20	F	INDUCTIVE	R	P	DAL
RER70F17R8&	17.8	20	F	INDUCTIVE	R	P	DAL
RER70F18R2&	18.2	20	F	INDUCTIVE	R	P	DAL
RER70F18R7&	18.7	20	F	INDUCTIVE	R	P	DAL
RER70F19R1&	19.1	20	F	INDUCTIVE	R	P	DAL
RER70F19R6&	19.6	20	F	INDUCTIVE	R	P	DAL
RER70F20R0&	20.0	20	F	INDUCTIVE	R	P	DAL
RER70F20R5&	20.5	20	F	INDUCTIVE	R	P	DAL
RER70F21R0&	21.0	20	F	INDUCTIVE	R	P	DAL
RER70F21R5&	21.5	20	F	INDUCTIVE	R	P	DAL
RER70F22R1&	22.1	20	F	INDUCTIVE	R	P	DAL
RER70F22R6&	22.6	20	F	INDUCTIVE	R	P	DAL
RER70F23R2&	23.2	20	F	INDUCTIVE	R	P	DAL
RER70F23R7&	23.7	20	F	INDUCTIVE	R	P	DAL
RER70F24R3&	24.3	20	F	INDUCTIVE	R	P	DAL
RER70F24R9&	24.9	20	F	INDUCTIVE	R	P	DAL
RER70F25R5&	25.5	20	F	INDUCTIVE	R	P	DAL
RER70F26R1&	26.1	20	F	INDUCTIVE	R	P	DAL
RER70F26R7&	26.7	20	F	INDUCTIVE	R	P	DAL
RER70F27R4&	27.4	20	F	INDUCTIVE	R	P	DAL
RER70F28R0&	28.0	20	F	INDUCTIVE	R	P	DAL
RER70F28R7&	28.7	20	F	INDUCTIVE	R	P	DAL
RER70F29R4&	29.4	20	F	INDUCTIVE	R	P	DAL
RER70F30R1&	30.1	20	F	INDUCTIVE	R	P	DAL
RER70F30R9&	30.9	20	F	INDUCTIVE	R	P	DAL
RER70F31R6&	31.6	20	F	INDUCTIVE	R	P	DAL
RER70F32R4&	32.4	20	F	INDUCTIVE	R	P	DAL
RER70F33R2&	33.2	20	F	INDUCTIVE	R	P	DAL
RER70F34R0&	34.0	20	F	INDUCTIVE	R	P	DAL
RER70F34R8&	34.8	20	F	INDUCTIVE	R	P	DAL
RER70F35R7&	35.7	20	F	INDUCTIVE	R	P	DAL
RER70F36R5&	36.5	20	F	INDUCTIVE	R	P	DAL
RER70F37R4&	37.4	20	F	INDUCTIVE	R	P	DAL
RER70F38R3&	38.3	20	F	INDUCTIVE	R	P	DAL
RER70F39R2&	39.2	20	F	INDUCTIVE	R	P	DAL
RER70F40R2&	40.2	20	F	INDUCTIVE	R	P	DAL
RER70F41R2&	41.2	20	F	INDUCTIVE	R	P	DAL
RER70F42R2&	42.2	20	F	INDUCTIVE	R	P	DAL
RER70F43R2&	43.2	20	F	INDUCTIVE	R	P	DAL
RER70F44R2&	44.2	20	F	INDUCTIVE	R	P	DAL

RER70F45R3&	45.3	20	F	INDUCTIVE	R	P	DAL
RER70F46R4&	46.4	20	F	INDUCTIVE	R	P	DAL
RER70F47R5&	47.5	20	F	INDUCTIVE	R	P	DAL
RER70F48R7&	48.7	20	F	INDUCTIVE	R	P	DAL
RER70F49R9&	49.9	20	F	INDUCTIVE	R	P	DAL
RER70F51R1&	51.1	20	F	INDUCTIVE	R	P	DAL
RER70F52R3&	52.3	20	F	INDUCTIVE	R	P	DAL
RER70F53R6&	53.6	20	F	INDUCTIVE	R	P	DAL
RER70F54R9&	54.9	20	F	INDUCTIVE	R	P	DAL
RER70F56R2&	56.2	20	F	INDUCTIVE	R	P	DAL
RER70F57R6&	57.6	20	F	INDUCTIVE	R	P	DAL
RER70F59R0&	59.0	20	F	INDUCTIVE	R	P	DAL
RER70F60R4&	60.4	20	F	INDUCTIVE	R	P	DAL
RER70F61R9&	61.9	20	F	INDUCTIVE	R	P	DAL
RER70F63R4&	63.4	20	F	INDUCTIVE	R	P	DAL
RER70F64R9&	64.9	20	F	INDUCTIVE	R	P	DAL
RER70F66R5&	66.5	20	F	INDUCTIVE	R	P	DAL
RER70F68R1&	68.1	20	F	INDUCTIVE	R	P	DAL
RER70F69R8&	69.8	20	F	INDUCTIVE	R	P	DAL
RER70F71R5&	71.5	20	F	INDUCTIVE	R	P	DAL
RER70F73R2&	73.2	20	F	INDUCTIVE	R	P	DAL
RER70F75R0&	75.0	20	F	INDUCTIVE	R	P	DAL
RER70F76R8&	76.8	20	F	INDUCTIVE	R	P	DAL
RER70F78R7&	78.7	20	F	INDUCTIVE	R	P	DAL
RER70F80R6&	80.6	20	F	INDUCTIVE	R	P	DAL
RER70F82R5&	82.5	20	F	INDUCTIVE	R	P	DAL
RER70F84R5&	84.5	20	F	INDUCTIVE	R	P	DAL
RER70F86R6&	86.6	20	F	INDUCTIVE	R	P	DAL
RER70F88R7&	88.7	20	F	INDUCTIVE	R	P	DAL
RER70F90R9&	90.9	20	F	INDUCTIVE	R	P	DAL
RER70F93R1&	93.1	20	F	INDUCTIVE	R	P	DAL
RER70F95R3&	95.3	20	F	INDUCTIVE	R	P	DAL
RER70F97R6&	97.6	20	F	INDUCTIVE	R	P	DAL
RER70F100R&	100	20	F	INDUCTIVE	R	P	DAL
RER70F102R&	102	20	F	INDUCTIVE	R	P	DAL
RER70F105R&	105	20	F	INDUCTIVE	R	P	DAL
RER70F107R&	107	20	F	INDUCTIVE	R	P	DAL
RER70F110R&	110	20	F	INDUCTIVE	R	P	DAL
RER70F113R&	113	20	F	INDUCTIVE	R	P	DAL
RER70F115R&	115	20	F	INDUCTIVE	R	P	DAL
RER70F118R&	118	20	F	INDUCTIVE	R	P	DAL
RER70F121R&	121	20	F	INDUCTIVE	R	P	DAL
RER70F124R&	124	20	F	INDUCTIVE	R	P	DAL
RER70F127R&	127	20	F	INDUCTIVE	R	P	DAL
RER70F130R&	130	20	F	INDUCTIVE	R	P	DAL
RER70F133R&	133	20	F	INDUCTIVE	R	P	DAL
RER70F137R&	137	20	F	INDUCTIVE	R	P	DAL

RER70F140R&	140	20	F	INDUCTIVE	R	P	DAL
RER70F143R&	143	20	F	INDUCTIVE	R	P	DAL
RER70F147R&	147	20	F	INDUCTIVE	R	P	DAL
RER70F150R&	150	20	F	INDUCTIVE	R	P	DAL
RER70F154R&	154	20	F	INDUCTIVE	R	P	DAL
RER70F158R&	158	20	F	INDUCTIVE	R	P	DAL
RER70F162R&	162	20	F	INDUCTIVE	R	P	DAL
RER70F165R&	165	20	F	INDUCTIVE	R	P	DAL
RER70F169R&	169	20	F	INDUCTIVE	R	P	DAL
RER70F174R&	174	20	F	INDUCTIVE	R	P	DAL
RER70F178R&	178	20	F	INDUCTIVE	R	P	DAL
RER70F182R&	182	20	F	INDUCTIVE	R	P	DAL
RER70F187R&	187	20	F	INDUCTIVE	R	P	DAL
RER70F191R&	191	20	F	INDUCTIVE	R	P	DAL
RER70F196R&	196	20	F	INDUCTIVE	R	P	DAL
RER70F200R&	200	20	F	INDUCTIVE	R	P	DAL
RER70F205R&	205	20	F	INDUCTIVE	R	P	DAL
RER70F210R&	210	20	F	INDUCTIVE	R	P	DAL
RER70F215R&	215	20	F	INDUCTIVE	R	P	DAL
RER70F221R&	221	20	F	INDUCTIVE	R	P	DAL
RER70F226R&	226	20	F	INDUCTIVE	R	P	DAL
RER70F232R&	232	20	F	INDUCTIVE	R	P	DAL
RER70F237R&	237	20	F	INDUCTIVE	R	P	DAL
RER70F243R&	243	20	F	INDUCTIVE	R	P	DAL
RER70F249R&	249	20	F	INDUCTIVE	R	P	DAL
RER70F255R&	255	20	F	INDUCTIVE	R	P	DAL
RER70F261R&	261	20	F	INDUCTIVE	R	P	DAL
RER70F267R&	267	20	F	INDUCTIVE	R	P	DAL
RER70F274R&	274	20	F	INDUCTIVE	R	P	DAL
RER70F280R&	280	20	F	INDUCTIVE	R	P	DAL
RER70F287R&	287	20	F	INDUCTIVE	R	P	DAL
RER70F294R&	294	20	F	INDUCTIVE	R	P	DAL
RER70F301R&	301	20	F	INDUCTIVE	R	P	DAL
RER70F309R&	309	20	F	INDUCTIVE	R	P	DAL
RER70F316R&	316	20	F	INDUCTIVE	R	P	DAL
RER70F324R&	324	20	F	INDUCTIVE	R	P	DAL
RER70F332R&	332	20	F	INDUCTIVE	R	P	DAL
RER70F340R&	340	20	F	INDUCTIVE	R	P	DAL
RER70F348R&	348	20	F	INDUCTIVE	R	P	DAL
RER70F357R&	357	20	F	INDUCTIVE	R	P	DAL
RER70F365R&	365	20	F	INDUCTIVE	R	P	DAL
RER70F374R&	374	20	F	INDUCTIVE	R	P	DAL
RER70F383R&	383	20	F	INDUCTIVE	R	P	DAL
RER70F392R&	392	20	F	INDUCTIVE	R	P	DAL
RER70F402R&	402	20	F	INDUCTIVE	R	P	DAL
RER70F412R&	412	20	F	INDUCTIVE	R	P	DAL
RER70F422R&	422	20	F	INDUCTIVE	R	P	DAL

RER70F432R&	432	20	F	INDUCTIVE	R	P	DAL
RER70F442R&	442	20	F	INDUCTIVE	R	P	DAL
RER70F453R&	453	20	F	INDUCTIVE	R	P	DAL
RER70F464R&	464	20	F	INDUCTIVE	R	P	DAL
RER70F475R&	475	20	F	INDUCTIVE	R	P	DAL
RER70F487R&	487	20	F	INDUCTIVE	R	P	DAL
RER70F499R&	499	20	F	INDUCTIVE	R	P	DAL
RER70F511R&	511	20	F	INDUCTIVE	R	P	DAL
RER70F523R&	523	20	F	INDUCTIVE	R	P	DAL
RER70F536R&	536	20	F	INDUCTIVE	R	P	DAL
RER70F549R&	549	20	F	INDUCTIVE	R	P	DAL
RER70F562R&	562	20	F	INDUCTIVE	R	P	DAL
RER70F576R&	576	20	F	INDUCTIVE	R	P	DAL
RER70F590R&	590	20	F	INDUCTIVE	R	P	DAL
RER70F604R&	604	20	F	INDUCTIVE	R	P	DAL
RER70F619R&	619	20	F	INDUCTIVE	R	P	DAL
RER70F634R&	634	20	F	INDUCTIVE	R	P	DAL
RER70F649R&	649	20	F	INDUCTIVE	R	P	DAL
RER70F665R&	665	20	F	INDUCTIVE	R	P	DAL
RER70F681R&	681	20	F	INDUCTIVE	R	P	DAL
RER70F698R&	698	20	F	INDUCTIVE	R	P	DAL
RER70F715R&	715	20	F	INDUCTIVE	R	P	DAL
RER70F732R&	732	20	F	INDUCTIVE	R	P	DAL
RER70F750R&	750	20	F	INDUCTIVE	R	P	DAL
RER70F768R&	768	20	F	INDUCTIVE	R	P	DAL
RER70F787R&	787	20	F	INDUCTIVE	R	P	DAL
RER70F806R&	806	20	F	INDUCTIVE	R	P	DAL
RER70F825R&	825	20	F	INDUCTIVE	R	P	DAL
RER70F845R&	845	20	F	INDUCTIVE	R	P	DAL
RER70F866R&	866	20	F	INDUCTIVE	R	P	DAL
RER70F887R&	887	20	F	INDUCTIVE	R	P	DAL
RER70F909R&	909	20	F	INDUCTIVE	R	P	DAL
RER70F931R&	931	20	F	INDUCTIVE	R	P	DAL
RER70F953R&	953	20	F	INDUCTIVE	R	P	DAL
RER70F976R&	976	20	F	INDUCTIVE	R	P	DAL
RER70F1001&	1,000	20	F	INDUCTIVE	R	P	DAL
RER70F1021&	1,020	20	F	INDUCTIVE	R	P	DAL
RER70F1051&	1,050	20	F	INDUCTIVE	R	P	DAL
RER70F1071&	1,070	20	F	INDUCTIVE	R	P	DAL
RER70F1101&	1,100	20	F	INDUCTIVE	R	P	DAL
RER70F1131&	1,130	20	F	INDUCTIVE	R	P	DAL
RER70F1151&	1,150	20	F	INDUCTIVE	R	P	DAL
RER70F1181&	1,180	20	F	INDUCTIVE	R	P	DAL
RER70F1211&	1,210	20	F	INDUCTIVE	R	P	DAL
RER70F1241&	1,240	20	F	INDUCTIVE	R	P	DAL
RER70F1271&	1,270	20	F	INDUCTIVE	R	P	DAL
RER70F1301&	1,300	20	F	INDUCTIVE	R	P	DAL

RER70F1331&	1,330	20	F	INDUCTIVE	R	P	DAL
RER70F1371&	1,370	20	F	INDUCTIVE	R	P	DAL
RER70F1401&	1,400	20	F	INDUCTIVE	R	P	DAL
RER70F1431&	1,430	20	F	INDUCTIVE	R	P	DAL
RER70F1471&	1,470	20	F	INDUCTIVE	R	P	DAL
RER70F1501&	1,500	20	F	INDUCTIVE	R	P	DAL
RER70F1541&	1,540	20	F	INDUCTIVE	R	P	DAL
RER70F1581&	1,580	20	F	INDUCTIVE	R	P	DAL
RER70F1621&	1,620	20	F	INDUCTIVE	R	P	DAL
RER70F1651&	1,650	20	F	INDUCTIVE	R	P	DAL
RER70F1691&	1,690	20	F	INDUCTIVE	R	P	DAL
RER70F1741&	1,740	20	F	INDUCTIVE	R	P	DAL
RER70F1781&	1,780	20	F	INDUCTIVE	R	P	DAL
RER70F1821&	1,820	20	F	INDUCTIVE	R	P	DAL
RER70F1871&	1,870	20	F	INDUCTIVE	R	P	DAL
RER70F1911&	1,910	20	F	INDUCTIVE	R	P	DAL
RER70F1961&	1,960	20	F	INDUCTIVE	R	P	DAL
RER70F2001&	2,000	20	F	INDUCTIVE	R	P	DAL
RER70F2051&	2,050	20	F	INDUCTIVE	R	P	DAL
RER70F2101&	2,100	20	F	INDUCTIVE	R	P	DAL
RER70F2151&	2,150	20	F	INDUCTIVE	R	P	DAL
RER70F2211&	2,210	20	F	INDUCTIVE	R	P	DAL
RER70F2261&	2,260	20	F	INDUCTIVE	R	P	DAL
RER70F2321&	2,320	20	F	INDUCTIVE	R	P	DAL
RER70F2371&	2,370	20	F	INDUCTIVE	R	P	DAL
RER70F2431&	2,430	20	F	INDUCTIVE	R	P	DAL
RER70F2491&	2,490	20	F	INDUCTIVE	R	P	DAL
RER70F2551&	2,550	20	F	INDUCTIVE	R	P	DAL
RER70F2611&	2,610	20	F	INDUCTIVE	R	P	DAL
RER70F2671&	2,670	20	F	INDUCTIVE	R	P	DAL
RER70F2741&	2,740	20	F	INDUCTIVE	R	P	DAL
RER70F2801&	2,800	20	F	INDUCTIVE	R	P	DAL
RER70F2871&	2,870	20	F	INDUCTIVE	R	P	DAL
RER70F2941&	2,940	20	F	INDUCTIVE	R	P	DAL
RER70F3011&	3,010	20	F	INDUCTIVE	R	P	DAL
RER70F3091&	3,090	20	F	INDUCTIVE	R	P	DAL
RER70F3161&	3,160	20	F	INDUCTIVE	R	P	DAL
RER70F3241&	3,240	20	F	INDUCTIVE	R	P	DAL
RER70F3321&	3,320	20	F	INDUCTIVE	R	P	DAL
RER70F3401&	3,400	20	F	INDUCTIVE	R	P	DAL
RER70F3481&	3,480	20	F	INDUCTIVE	R	P	DAL
RER70F3571&	3,570	20	F	INDUCTIVE	R	P	DAL
RER70F3651&	3,650	20	F	INDUCTIVE	R	P	DAL
RER70F3741&	3,740	20	F	INDUCTIVE	R	P	DAL
RER70F3831&	3,830	20	F	INDUCTIVE	R	P	DAL
RER70F3921&	3,920	20	F	INDUCTIVE	R	P	DAL
RER70F4021&	4,020	20	F	INDUCTIVE	R	P	DAL

RER70F4121&	4,120	20	F	INDUCTIVE	R	P	DAL
RER70F4221&	4,220	20	F	INDUCTIVE	R	P	DAL
RER70F4321&	4,320	20	F	INDUCTIVE	R	P	DAL
RER70F4421&	4,420	20	F	INDUCTIVE	R	P	DAL
RER70F4531&	4,530	20	F	INDUCTIVE	R	P	DAL
RER70F4641&	4,640	20	F	INDUCTIVE	R	P	DAL
RER70F4751&	4,750	20	F	INDUCTIVE	R	P	DAL
RER70F4871&	4,870	20	F	INDUCTIVE	R	P	DAL
RER70F4991&	4,990	20	F	INDUCTIVE	R	P	DAL
RER70F5111&	5,110	20	F	INDUCTIVE	R	P	DAL
RER70F5231&	5,230	20	F	INDUCTIVE	R	P	DAL
RER70F5361&	5,360	20	F	INDUCTIVE	R	P	DAL
RER70F5491&	5,490	20	F	INDUCTIVE	R	P	DAL
RER70F5621&	5,620	20	F	INDUCTIVE	R	P	DAL
RER70F5761&	5,760	20	F	INDUCTIVE	R	P	DAL
RER70F5901&	5,900	20	F	INDUCTIVE	R	P	DAL
RER70F6041&	6,040	20	F	INDUCTIVE	R	P	DAL
RER70F6191&	6,190	20	F	INDUCTIVE	R	P	DAL
RER70F6341&	6,340	20	F	INDUCTIVE	R	P	DAL
RER70F6491&	6,490	20	F	INDUCTIVE	R	P	DAL
RER70F6651&	6,650	20	F	INDUCTIVE	R	P	DAL
RER70F6811&	6,810	20	F	INDUCTIVE	R	P	DAL
RER70F6981&	6,980	20	F	INDUCTIVE	R	P	DAL
RER70F7151&	7,150	20	F	INDUCTIVE	R	P	DAL
RER70F7321&	7,320	20	F	INDUCTIVE	R	P	DAL
RER70F7501&	7,500	20	F	INDUCTIVE	R	P	DAL
RER70F7681&	7,680	20	F	INDUCTIVE	R	P	DAL
RER70F7871&	7,870	20	F	INDUCTIVE	R	P	DAL
RER70F8061&	8,060	20	F	INDUCTIVE	R	P	DAL
RER70F8251&	8,250	20	F	INDUCTIVE	R	P	DAL
RER70F8451&	8,450	20	F	INDUCTIVE	R	P	DAL
RER70F8661&	8,660	20	F	INDUCTIVE	R	P	DAL
RER70F8871&	8,870	20	F	INDUCTIVE	R	P	DAL
RER70F9091&	9,090	20	F	INDUCTIVE	R	P	DAL
RER70F9311&	9,310	20	F	INDUCTIVE	R	P	DAL
RER70F9531&	9,530	20	F	INDUCTIVE	R	P	DAL
RER70F9761&	9,760	20	F	INDUCTIVE	R	P	DAL
RER70F1002&	10,000	20	F	INDUCTIVE	R	P	DAL
RER70F1022&	10,200	20	F	INDUCTIVE	R	P	DAL
RER70F1052&	10,500	20	F	INDUCTIVE	R	P	DAL
RER70F1072&	10,700	20	F	INDUCTIVE	R	P	DAL
RER70F1102&	11,000	20	F	INDUCTIVE	R	P	DAL
RER70F1132&	11,300	20	F	INDUCTIVE	R	P	DAL
RER70F1152&	11,500	20	F	INDUCTIVE	R	P	DAL
RER70F1182&	11,800	20	F	INDUCTIVE	R	P	DAL
RER70F1212&	12,100	20	F	INDUCTIVE	R	P	DAL

RER70 RESISTORS DECADE BREAKDOWN

Click on the link below to see the associated parts selection listing:

Resistance Range
0.100 Ohms through 0.976 Ohms
1.00 Ohms through 9.76 Ohms
10.0 Ohms through 97.6 Ohms
100 Ohms through 976 Ohms
1000 Ohms through 9760 Ohms

RER70 Wirewound Resistors: 0.100 Ohms through 0.976 Ohms

	Resistance	Power	Resistance		Level 1	Level 2	
Part Number	Value (Ohms)	Rating (W)	Tolerance	Winding	(FRL)(&)	(FRL)(&)	Manufacturer
RER70FR100&	0.100	20	F	INDUCTIVE	R	P	DAL
RER70FR102&	0.102	20	F	INDUCTIVE	R	P	DAL
RER70FR105&	0.105	20	F	INDUCTIVE	R	P	DAL
RER70FR107&	0.107	20	F	INDUCTIVE	R	P	DAL
RER70FR110&	0.110	20	F	INDUCTIVE	R	P	DAL
RER70FR113&	0.113	20	F	INDUCTIVE	R	P	DAL
RER70FR115&	0.115	20	F	INDUCTIVE	R	P	DAL
RER70FR118&	0.118	20	F	INDUCTIVE	R	P	DAL
RER70FR121&	0.121	20	F	INDUCTIVE	R	P	DAL
RER70FR124&	0.124	20	F	INDUCTIVE	R	P	DAL
RER70FR127&	0.127	20	F	INDUCTIVE	R	P	DAL
RER70FR130&	0.130	20	F	INDUCTIVE	R	P	DAL
RER70FR133&	0.133	20	F	INDUCTIVE	R	P	DAL
	Resistance	Power	Resistance		Level 1	Level 2	
Part Number	Value (Ohms)	Rating (W)	Tolerance	Winding	(FRL)(&)	(FRL)(&)	Manufacturer
RER70FR137&	0.137	20	F	INDUCTIVE	R	P	DAL
RER70FR140&	0.140	20	F	INDUCTIVE	R	P	DAL
RER70FR143&	0.143	20	F	INDUCTIVE	R	P	DAL
RER70FR147&	0.147	20	F	INDUCTIVE	R	P	DAL
RER70FR150&	0.150	20	F	INDUCTIVE	R	P	DAL
RER70FR154&	0.154	20	F	INDUCTIVE	R	P	DAL
RER70FR158&	0.158	20	F	INDUCTIVE	R	P	DAL
RER70FR162&	0.162	20	F	INDUCTIVE	R	P	DAL
RER70FR165&	0.165	20	F	INDUCTIVE	R	P	DAL
RER70FR169&	0.169	20	F	INDUCTIVE	R	P	DAL
RER70FR174&	0.174	20	F	INDUCTIVE	R	P	DAL
RER70FR178&	0.178	20	F	INDUCTIVE	R	P	DAL
RER70FR182&	0.182	20	F	INDUCTIVE	R	P	DAL
RER70FR187&	0.187	20	F	INDUCTIVE	R	P	DAL

	Resistance	Power	Resistance		Level 1	Level 2	
Part Number	Value (Ohms)	Rating (W)	Tolerance	Winding	(FRL)(&)	(FRL)(&)	Manufacturer
RER70FR191&	0.191	20	F	INDUCTIVE	R	P	DAL
RER70FR196&	0.196	20	F	INDUCTIVE	R	P	DAL
RER70FR200&	0.200	20	F	INDUCTIVE	R	P	DAL
RER70FR205&	0.205	20	F	INDUCTIVE	R	P	DAL
RER70FR210&	0.210	20	F	INDUCTIVE	R	P	DAL
RER70FR215&	0.215	20	F	INDUCTIVE	R	P	DAL
RER70FR221&	0.221	20	F	INDUCTIVE	R	P	DAL
RER70FR226&	0.226	20	F	INDUCTIVE	R	P	DAL
RER70FR232&	0.232	20	F	INDUCTIVE	R	P	DAL
RER70FR237&	0.237	20	F	INDUCTIVE	R	P	DAL
RER70FR243&	0.243	20	F	INDUCTIVE	R	P	DAL
RER70FR249&	0.249	20	F	INDUCTIVE	R	P	DAL
RER70FR255&	0.255	20	F	INDUCTIVE	R	P	DAL
RER70FR261&	0.261	20	F	INDUCTIVE	R	P	DAL
	Resistance	Power	Resistance		Level 1	Level 2	
Part Number	Value (Ohms)	Rating (W)	Tolerance	Winding	(FRL)(&)	(FRL)(&)	Manufacturer
RER70FR267&	0.267	20	F	INDUCTIVE	R	P	DAL
RER70FR274&	0.274	20	F	INDUCTIVE	R	P	DAL
RER70FR280&	0.280	20	F	INDUCTIVE	R	P	DAL
RER70FR287&	0.287	20	F	INDUCTIVE	R	P	DAL
RER70FR294&	0.294	20	F	INDUCTIVE	R	P	DAL
RER70FR301&	0.301	20	F	INDUCTIVE	R	P	DAL
RER70FR309&	0.309	20	F	INDUCTIVE	R	P	DAL
RER70FR316&	0.316	20	F	INDUCTIVE	R	P	DAL
RER70FR324&	0.324	20	F	INDUCTIVE	R	P	DAL
RER70FR332&	0.332	20	F	INDUCTIVE	R	P	DAL
RER70FR340&	0.340	20	F	INDUCTIVE	R	P	DAL
RER70FR348&	0.348	20	F	INDUCTIVE	R	P	DAL
RER70FR357&	0.357	20	F	INDUCTIVE	R	P	DAL
RER70FR365&	0.365	20	F	INDUCTIVE	R	P	DAL
	Resistance	Power	Resistance		Level 1	Level 2	
Part Number	Value (Ohms)	Rating (W)	Tolerance	Winding	(FRL)(&)	(FRL)(&)	Manufacturer
RER70FR374&	0.374	20	F	INDUCTIVE	R	P	DAL
RER70FR383&	0.383	20	F	INDUCTIVE	R	P	DAL
RER70FR392&	0.392	20	F	INDUCTIVE	R	P	DAL
RER70FR402&	0.402	20	F	INDUCTIVE	R	P	DAL
RER70FR412&	0.412	20	F	INDUCTIVE	R	P	DAL
RER70FR422&	0.422	20	F	INDUCTIVE	R	P	DAL
RER70FR432&	0.432	20	F	INDUCTIVE	R	P	DAL
RER70FR442&	0.442	20	F	INDUCTIVE	R	P	DAL
RER70FR453&	0.453	20	F	INDUCTIVE	R	P	DAL
RER70FR464&	0.464	20	F	INDUCTIVE	R	P	DAL
RER70FR475&	0.475	20	F	INDUCTIVE	R	P	DAL
RER70FR487&	0.487	20	F	INDUCTIVE	R	P	DAL
RER70FR499&	0.499	20	F	INDUCTIVE	R	P	DAL

RER70FR511&	0.511	20	F	INDUCTIVE	R	P	DAL
	Resistance	Power	Resistance		Level 1	Level 2	
Part Number	Value (Ohms)	Rating (W)	Tolerance	Winding	(FRL)(&)	(FRL)(&)	Manufacturer
RER70FR523&	0.523	20	F	INDUCTIVE	R	P	DAL
RER70FR536&	0.536	20	F	INDUCTIVE	R	P	DAL
RER70FR549&	0.549	20	F	INDUCTIVE	R	P	DAL
RER70FR562&	0.562	20	F	INDUCTIVE	R	P	DAL
RER70FR576&	0.576	20	F	INDUCTIVE	R	P	DAL
RER70FR590&	0.590	20	F	INDUCTIVE	R	P	DAL
RER70FR604&	0.604	20	F	INDUCTIVE	R	P	DAL
RER70FR619&	0.619	20	F	INDUCTIVE	R	P	DAL
RER70FR634&	0.634	20	F	INDUCTIVE	R	P	DAL
RER70FR649&	0.649	20	F	INDUCTIVE	R	P	DAL
RER70FR665&	0.665	20	F	INDUCTIVE	R	P	DAL
RER70FR681&	0.681	20	F	INDUCTIVE	R	P	DAL
RER70FR698&	0.698	20	F	INDUCTIVE	R	P	DAL
	Resistance	Power	Resistance		Level 1	Level 2	
Part Number	Value (Ohms)	Rating (W)	Tolerance	Winding	(FRL)(&)	(FRL)(&)	Manufacturer
RER70FR715&	0.715	20	F	INDUCTIVE	R	P	DAL
RER70FR732&	0.732	20	F	INDUCTIVE	R	P	DAL
RER70FR750&	0.750	20	F	INDUCTIVE	R	P	DAL
RER70FR768&	0.768	20	F	INDUCTIVE	R	P	DAL
RER70FR787&	0.787	20	F	INDUCTIVE	R	P	DAL
RER70FR806&	0.806	20	F	INDUCTIVE	R	P	DAL
RER70FR825&	0.825	20	F	INDUCTIVE	R	P	DAL
RER70FR845&	0.845	20	F	INDUCTIVE	R	P	DAL
	Resistance	Power	Resistance		Level 1	Level 2	
Part Number	Value (Ohms)	Rating (W)	Tolerance	Winding	(FRL)(&)	(FRL)(&)	Manufacturer
RER70FR866&	0.866	20	F	INDUCTIVE	R	P	DAL
RER70FR887&	0.887	20	F	INDUCTIVE	R	P	DAL
RER70FR909&	0.909	20	F	INDUCTIVE	R	P	DAL
RER70FR931&	0.930	20	F	INDUCTIVE	R	P	DAL
RER70FR953&	0.953	20	F	INDUCTIVE	R	P	DAL
RER70FR976&	0.976	20	F	INDUCTIVE	R	P	DAL
	Resistance	Power	Resistance		Level 1	Level 2	
Part Number	Value (Ohms)	Rating (W)	Tolerance	Winding	(FRL)(&)	(FRL)(&)	Manufacturer

RER70 Wirewound Resistors: 1.00 Ohms through 9.76 Ohms

	Resistance	Power	Resistance		Level 1	Level 2	
Part Number	Value (Ohms)	Rating (W)	Tolerance	Winding	(FRL)(&)	(FRL)(&)	Manufacturer
RER70F1R00&	1.00	20	F	INDUCTIVE	R	P	DAL
RER70F1R02&	1.02	20	F	INDUCTIVE	R	P	DAL
RER70F1R05&	1.05	20	F	INDUCTIVE	R	P	DAL
RER70F1R07&	1.07	20	F	INDUCTIVE	R	P	DAL

RER70F1R10&	1.10	20	F	INDUCTIVE	R	P	DAL
RER70F1R13&	1.13	20	F	INDUCTIVE	R	P	DAL
RER70F1R15&	1.15	20	F	INDUCTIVE	R	P	DAL
RER70F1R18&	1.18	20	F	INDUCTIVE	R	P	DAL
RER70F1R21&	1.21	20	F	INDUCTIVE	R	P	DAL
RER70F1R24&	1.24	20	F	INDUCTIVE	R	P	DAL
RER70F1R27&	1.27	20	F	INDUCTIVE	R	P	DAL
RER70F1R30&	1.30	20	F	INDUCTIVE	R	P	DAL
RER70F1R33&	1.33	20	F	INDUCTIVE	R	P	DAL
	Resistance	Power	Resistance		Level 1	Level 2	
Part Number	Value (Ohms)	Rating (W)	Tolerance	Winding	(FRL)(&)	(FRL)(&)	Manufacturer
RER70F1R37&	1.37	20	F	INDUCTIVE	R	P	DAL
RER70F1R40&	1.40	20	F	INDUCTIVE	R	P	DAL
RER70F1R43&	1.43	20	F	INDUCTIVE	R	P	DAL
RER70F1R47&	1.47	20	F	INDUCTIVE	R	P	DAL
RER70F1R50&	1.50	20	F	INDUCTIVE	R	P	DAL
RER70F1R54&	1.54	20	F	INDUCTIVE	R	P	DAL
RER70F1R58&	1.58	20	F	INDUCTIVE	R	P	DAL
RER70F1R62&	1.62	20	F	INDUCTIVE	R	P	DAL
RER70F1R65&	1.65	20	F	INDUCTIVE	R	P	DAL
RER70F1R69&	1.69	20	F	INDUCTIVE	R	P	DAL
RER70F1R74&	1.74	20	F	INDUCTIVE	R	P	DAL
RER70F1R78&	1.78	20	F	INDUCTIVE	R	P	DAL
RER70F1R82&	1.82	20	F	INDUCTIVE	R	P	DAL
RER70F1R87&	1.87	20	F	INDUCTIVE	R	P	DAL
	Resistance	Power	Resistance		Level 1	Level 2	
Part Number	Value (Ohms)	Rating (W)	Tolerance	Winding	(FRL)(&)	(FRL)(&)	Manufacturer
RER70F1R91&	1.91	20	F	INDUCTIVE	R	P	DAL
RER70F1R96&	1.96	20	F	INDUCTIVE	R	P	DAL
RER70F2R00&	2.00	20	F	INDUCTIVE	R	P	DAL
RER70F2R05&	2.05	20	F	INDUCTIVE	R	P	DAL
RER70F2R10&	2.10	20	F	INDUCTIVE	R	P	DAL
RER70F2R15&	2.15	20	F	INDUCTIVE	R	P	DAL
RER70F2R21&	2.21	20	F	INDUCTIVE	R	P	DAL
RER70F2R26&	2.26	20	F	INDUCTIVE	R	P	DAL
RER70F2R32&	2.32	20	F	INDUCTIVE	R	P	DAL
RER70F2R37&	2.37	20	F	INDUCTIVE	R	P	DAL
RER70F2R43&	2.43	20	F	INDUCTIVE	R	P	DAL
RER70F2R49&	2.49	20	F	INDUCTIVE	R	P	DAL
RER70F2R55&	2.55	20	F	INDUCTIVE	R	P	DAL
RER70F2R61&	2.61	20	F	INDUCTIVE	R	P	DAL
	Resistance	Power	Resistance		Level 1	Level 2	
Part Number	Value (Ohms)	Rating (W)	Tolerance	Winding	(FRL)(&)	(FRL)(&)	Manufacturer
RER70F2R67&	2.67	20	F	INDUCTIVE	R	P	DAL
RER70F2R74&	2.74	20	F	INDUCTIVE	R	P	DAL
RER70F2R80&	2.80	20	F	INDUCTIVE	R	P	DAL
RER70F2R87&	2.87	20	F	INDUCTIVE	R	P	DAL

RER70F2R94&	2.94	20	F	INDUCTIVE	R	P	DAL
RER70F3R01&	3.01	20	F	INDUCTIVE	R	P	DAL
RER70F3R09&	3.09	20	F	INDUCTIVE	R	P	DAL
RER70F3R16&	3.16	20	F	INDUCTIVE	R	P	DAL
RER70F3R24&	3.24	20	F	INDUCTIVE	R	P	DAL
RER70F3R32&	3.32	20	F	INDUCTIVE	R	P	DAL
RER70F3R40&	3.40	20	F	INDUCTIVE	R	P	DAL
RER70F3R48&	3.48	20	F	INDUCTIVE	R	P	DAL
RER70F3R57&	3.57	20	F	INDUCTIVE	R	P	DAL
RER70F3R65&	3.65	20	F	INDUCTIVE	R	P	DAL
	Resistance	Power	Resistance		Level 1	Level 2	
Part Number	Value (Ohms)	Rating (W)	Tolerance	Winding	(FRL)(&)	(FRL)(&)	Manufacturer
RER70F3R74&	3.74	20	F	INDUCTIVE	R	P	DAL
RER70F3R83&	3.83	20	F	INDUCTIVE	R	P	DAL
RER70F3R92&	3.92	20	F	INDUCTIVE	R	P	DAL
RER70F4R02&	4.02	20	F	INDUCTIVE	R	P	DAL
RER70F4R12&	4.12	20	F	INDUCTIVE	R	P	DAL
RER70F4R22&	4.22	20	F	INDUCTIVE	R	P	DAL
RER70F4R32&	4.32	20	F	INDUCTIVE	R	P	DAL
RER70F4R42&	4.42	20	F	INDUCTIVE	R	P	DAL
RER70F4R53&	4.53	20	F	INDUCTIVE	R	P	DAL
RER70F4R64&	4.64	20	F	INDUCTIVE	R	P	DAL
RER70F4R75&	4.75	20	F	INDUCTIVE	R	P	DAL
RER70F4R87&	4.87	20	F	INDUCTIVE	R	P	DAL
RER70F4R99&	4.99	20	F	INDUCTIVE	R	P	DAL
RER70F5R11&	5.11	20	F	INDUCTIVE	R	P	DAL
	Resistance	Power	Resistance		Level 1	Level 2	
Part Number	Value (Ohms)	Rating (W)	Tolerance	Winding	(FRL)(&)	(FRL)(&)	Manufacturer
RER70F5R23&	5.23	20	F	INDUCTIVE	R	P	DAL
RER70F5R36&	5.36	20	F	INDUCTIVE	R	P	DAL
RER70F5R49&	5.49	20	F	INDUCTIVE	R	P	DAL
RER70F5R62&	5.62	20	F	INDUCTIVE	R	P	DAL
RER70F5R76&	5.76	20	F	INDUCTIVE	R	P	DAL
RER70F5R90&	5.90	20	F	INDUCTIVE	R	P	DAL
RER70F6R04&	6.04	20	F	INDUCTIVE	R	P	DAL
RER70F6R19&	6.19	20	F	INDUCTIVE	R	P	DAL
RER70F6R34&	6.34	20	F	INDUCTIVE	R	P	DAL
RER70F6R49&	6.49	20	F	INDUCTIVE	R	P	DAL
RER70F6R65&	6.65	20	F	INDUCTIVE	R	P	DAL
RER70F6R81&	6.81	20	F	INDUCTIVE	R	P	DAL
RER70F6R98&	6.98	20	F	INDUCTIVE	R	P	DAL
	Resistance	Power	Resistance		Level 1	Level 2	
Part Number	Value (Ohms)	Rating (W)	Tolerance	Winding	(FRL)(&)	(FRL)(&)	Manufacturer
RER70F7R15&	7.15	20	F	INDUCTIVE	R	P	DAL
RER70F7R32&	7.32	20	F	INDUCTIVE	R	P	DAL
RER70F7R50&	7.50	20	F	INDUCTIVE	R	P	DAL
RER70F7R68&	7.68	20	F	INDUCTIVE	R	P	DAL

RER70F7R87&	7.87	20	F	INDUCTIVE	R	P	DAL
RER70F8R06&	8.06	20	F	INDUCTIVE	R	P	DAL
RER70F8R25&	8.25	20	F	INDUCTIVE	R	P	DAL
RER70F8R45&	8.45	20	F	INDUCTIVE	R	P	DAL
RER70F8R66&	8.66	20	F	INDUCTIVE	R	P	DAL
RER70F8R87&	8.87	20	F	INDUCTIVE	R	P	DAL
RER70F9R09&	9.09	20	F	INDUCTIVE	R	P	DAL
RER70F9R31&	9.31	20	F	INDUCTIVE	R	P	DAL
RER70F9R53&	9.53	20	F	INDUCTIVE	R	P	DAL
RER70F9R76&	9.76	20	F	INDUCTIVE	R	P	DAL
	Resistance	Power	Resistance		Level 1	Level 2	
Part Number	Value (Ohms)	Rating (W)	Tolerance	Winding	(FRL)(&)	(FRL)(&)	Manufacturer

RER70 Wirewound Resistors: 10.0 Ohms through 97.6 Ohms

	Resistance	Power	Resistance		Level 1	Level 2	
Part Number	Value (Ohms)	Rating (W)	Tolerance	Winding	(FRL)(&)	(FRL)(&)	Manufacturer
RER70F10R0&	10.0	20	F	INDUCTIVE	R	P	DAL
RER70F10R2&	10.2	20	F	INDUCTIVE	R	P	DAL
RER70F10R5&	10.5	20	F	INDUCTIVE	R	P	DAL
RER70F10R7&	10.7	20	F	INDUCTIVE	R	P	DAL
RER70F11R0&	11.0	20	F	INDUCTIVE	R	P	DAL
RER70F11R3&	11.3	20	F	INDUCTIVE	R	P	DAL
RER70F11R5&	11.5	20	F	INDUCTIVE	R	P	DAL
RER70F11R8&	11.8	20	F	INDUCTIVE	R	P	DAL
RER70F12R1&	12.1	20	F	INDUCTIVE	R	P	DAL
RER70F12R4&	12.4	20	F	INDUCTIVE	R	P	DAL
RER70F12R7&	12.7	20	F	INDUCTIVE	R	P	DAL
RER70F13R0&	13.0	20	F	INDUCTIVE	R	P	DAL
RER70F13R3&	13.3	20	F	INDUCTIVE	R	P	DAL
	Resistance	Power	Resistance		Level 1	Level 2	
Part Number	Value (Ohms)	Rating (W)	Tolerance	Winding	(FRL)(&)	(FRL)(&)	Manufacturer
RER70F13R7&	13.7	20	F	INDUCTIVE	R	P	DAL
RER70F14R0&	14.0	20	F	INDUCTIVE	R	P	DAL
RER70F14R3&	14.3	20	F	INDUCTIVE	R	P	DAL
RER70F14R7&	14.7	20	F	INDUCTIVE	R	P	DAL
RER70F15R0&	15.0	20	F	INDUCTIVE	R	P	DAL
RER70F15R4&	15.4	20	F	INDUCTIVE	R	P	DAL
RER70F15R8&	15.8	20	F	INDUCTIVE	R	P	DAL
RER70F16R2&	16.2	20	F	INDUCTIVE	R	P	DAL
RER70F16R5&	16.5	20	F	INDUCTIVE	R	P	DAL
RER70F16R9&	16.9	20	F	INDUCTIVE	R	P	DAL
RER70F17R4&	17.4	20	F	INDUCTIVE	R	P	DAL
RER70F17R8&	17.8	20	F	INDUCTIVE	R	P	DAL
RER70F18R2&	18.2	20	F	INDUCTIVE	R	P	DAL

RER70F18R7&	18.7	20	F	INDUCTIVE	R	P	DAL
	Resistance	Power	Resistance		Level 1	Level 2	
Part Number	Value (Ohms)	Rating (W)	Tolerance	Winding	(FRL)(&)	(FRL)(&)	Manufacturer
RER70F19R1&	19.1	20	F	INDUCTIVE	R	P	DAL
RER70F19R6&	19.6	20	F	INDUCTIVE	R	P	DAL
RER70F20R0&	20.0	20	F	INDUCTIVE	R	P	DAL
RER70F20R5&	20.5	20	F	INDUCTIVE	R	P	DAL
RER70F21R0&	21.0	20	F	INDUCTIVE	R	P	DAL
RER70F21R5&	21.5	20	F	INDUCTIVE	R	P	DAL
RER70F22R1&	22.1	20	F	INDUCTIVE	R	P	DAL
RER70F22R6&	22.6	20	F	INDUCTIVE	R	P	DAL
RER70F23R2&	23.2	20	F	INDUCTIVE	R	P	DAL
RER70F23R7&	23.7	20	F	INDUCTIVE	R	P	DAL
RER70F24R3&	24.3	20	F	INDUCTIVE	R	P	DAL
RER70F24R9&	24.9	20	F	INDUCTIVE	R	P	DAL
RER70F25R5&	25.5	20	F	INDUCTIVE	R	P	DAL
RER70F26R1&	26.1	20	F	INDUCTIVE	R	P	DAL
	Resistance	Power	Resistance		Level 1	Level 2	
Part Number	Value (Ohms)	Rating (W)	Tolerance	Winding	(FRL)(&)	(FRL)(&)	Manufacturer
RER70F26R7&	26.7	20	F	INDUCTIVE	R	P	DAL
RER70F27R4&	27.4	20	F	INDUCTIVE	R	P	DAL
RER70F28R0&	28.0	20	F	INDUCTIVE	R	P	DAL
RER70F28R7&	28.7	20	F	INDUCTIVE	R	P	DAL
RER70F29R4&	29.4	20	F	INDUCTIVE	R	P	DAL
RER70F30R1&	30.1	20	F	INDUCTIVE	R	P	DAL
RER70F30R9&	30.9	20	F	INDUCTIVE	R	P	DAL
RER70F31R6&	31.6	20	F	INDUCTIVE	R	P	DAL
RER70F32R4&	32.4	20	F	INDUCTIVE	R	P	DAL
RER70F33R2&	33.2	20	F	INDUCTIVE	R	P	DAL
RER70F34R0&	34.0	20	F	INDUCTIVE	R	P	DAL
RER70F34R8&	34.8	20	F	INDUCTIVE	R	P	DAL
RER70F35R7&	35.7	20	F	INDUCTIVE	R	P	DAL
RER70F36R5&	36.5	20	F	INDUCTIVE	R	P	DAL
	Resistance	Power	Resistance		Level 1	Level 2	
Part Number	Value (Ohms)	Rating (W)	Tolerance	Winding	(FRL)(&)	(FRL)(&)	Manufacturer
RER70F37R4&	37.4	20	F	INDUCTIVE	R	P	DAL
RER70F38R3&	38.3	20	F	INDUCTIVE	R	P	DAL
RER70F39R2&	39.2	20	F	INDUCTIVE	R	P	DAL
RER70F40R2&	40.2	20	F	INDUCTIVE	R	P	DAL
RER70F41R2&	41.2	20	F	INDUCTIVE	R	P	DAL
RER70F42R2&	42.2	20	F	INDUCTIVE	R	P	DAL
RER70F43R2&	43.2	20	F	INDUCTIVE	R	P	DAL
RER70F44R2&	44.2	20	F	INDUCTIVE	R	P	DAL
RER70F45R3&	45.3	20	F	INDUCTIVE	R	P	DAL
RER70F46R4&	46.4	20	F	INDUCTIVE	R	P	DAL
RER70F47R5&	47.5	20	F	INDUCTIVE	R	P	DAL
RER70F48R7&	48.7	20	F	INDUCTIVE	R	P	DAL

RER70F49R9&	49.9	20	F	INDUCTIVE	R	P	DAL
RER70F51R1&	51.1	20	F	INDUCTIVE	R	P	DAL
	Resistance	Power	Resistance		Level 1	Level 2	
Part Number	Value (Ohms)	Rating (W)	Tolerance	Winding	(FRL)(&)	(FRL)(&)	Manufacturer
RER70F52R3&	52.3	20	F	INDUCTIVE	R	P	DAL
RER70F53R6&	53.6	20	F	INDUCTIVE	R	P	DAL
RER70F54R9&	54.9	20	F	INDUCTIVE	R	P	DAL
RER70F56R2&	56.2	20	F	INDUCTIVE	R	P	DAL
RER70F57R6&	57.6	20	F	INDUCTIVE	R	P	DAL
RER70F59R0&	59.0	20	F	INDUCTIVE	R	P	DAL
RER70F60R4&	60.4	20	F	INDUCTIVE	R	P	DAL
RER70F61R9&	61.9	20	F	INDUCTIVE	R	P	DAL
RER70F63R4&	63.4	20	F	INDUCTIVE	R	P	DAL
RER70F64R9&	64.9	20	F	INDUCTIVE	R	P	DAL
RER70F66R5&	66.5	20	F	INDUCTIVE	R	P	DAL
RER70F68R1&	68.1	20	F	INDUCTIVE	R	P	DAL
RER70F69R8&	69.8	20	F	INDUCTIVE	R	P	DAL
	Resistance	Power	Resistance		Level 1	Level 2	
Part Number	Value (Ohms)	Rating (W)	Tolerance	Winding	(FRL)(&)	(FRL)(&)	Manufacturer
RER70F71R5&	71.5	20	F	INDUCTIVE	R	P	DAL
RER70F73R2&	73.2	20	F	INDUCTIVE	R	P	DAL
RER70F75R0&	75.0	20	F	INDUCTIVE	R	P	DAL
RER70F76R8&	76.8	20	F	INDUCTIVE	R	P	DAL
RER70F78R7&	78.7	20	F	INDUCTIVE	R	P	DAL
RER70F80R6&	80.6	20	F	INDUCTIVE	R	P	DAL
RER70F82R5&	82.5	20	F	INDUCTIVE	R	P	DAL
RER70F84R5&	84.5	20	F	INDUCTIVE	R	P	DAL
RER70F86R6&	86.6	20	F	INDUCTIVE	R	P	DAL
RER70F88R7&	88.7	20	F	INDUCTIVE	R	P	DAL
RER70F90R9&	90.9	20	F	INDUCTIVE	R	P	DAL
RER70F93R1&	93.1	20	F	INDUCTIVE	R	P	DAL
RER70F95R3&	95.3	20	F	INDUCTIVE	R	P	DAL
RER70F97R6&	97.6	20	F	INDUCTIVE	R	P	DAL
	Resistance	Power	Resistance		Level 1	Level 2	
Part Number	Value (Ohms)	Rating (W)	Tolerance	Winding	(FRL)(&)	(FRL)(&)	Manufacturer

RER70 Wirewound Resistors: 100 Ohms through 976 Ohms

	Resistance	Power	Resistance		Level 1	Level 2	
Part Number	Value (Ohms)	Rating (W)	Tolerance	Winding	(FRL)(&)	(FRL)(&)	Manufacturer
RER70F100R&	100	20	F	INDUCTIVE	R	P	DAL
RER70F102R&	102	20	F	INDUCTIVE	R	P	DAL
RER70F105R&	105	20	F	INDUCTIVE	R	P	DAL
RER70F107R&	107	20	F	INDUCTIVE	R	P	DAL
RER70F110R&	110	20	F	INDUCTIVE	R	P	DAL

RER70F113R&	113	20	F	INDUCTIVE	R	P	DAL
RER70F115R&	115	20	F	INDUCTIVE	R	P	DAL
RER70F118R&	118	20	F	INDUCTIVE	R	P	DAL
RER70F121R&	121	20	F	INDUCTIVE	R	P	DAL
RER70F124R&	124	20	F	INDUCTIVE	R	P	DAL
RER70F127R&	127	20	F	INDUCTIVE	R	P	DAL
RER70F130R&	130	20	F	INDUCTIVE	R	P	DAL
RER70F133R&	133	20	F	INDUCTIVE	R	P	DAL
	Resistance	Power	Resistance		Level 1	Level 2	
Part Number	Value (Ohms)	Rating (W)	Tolerance	Winding	(FRL)(&)	(FRL)(&)	Manufacturer
RER70F137R&	137	20	F	INDUCTIVE	R	P	DAL
RER70F140R&	140	20	F	INDUCTIVE	R	P	DAL
RER70F143R&	143	20	F	INDUCTIVE	R	P	DAL
RER70F147R&	147	20	F	INDUCTIVE	R	P	DAL
RER70F150R&	150	20	F	INDUCTIVE	R	P	DAL
RER70F154R&	154	20	F	INDUCTIVE	R	P	DAL
RER70F158R&	158	20	F	INDUCTIVE	R	P	DAL
RER70F162R&	162	20	F	INDUCTIVE	R	P	DAL
RER70F165R&	165	20	F	INDUCTIVE	R	P	DAL
RER70F169R&	169	20	F	INDUCTIVE	R	P	DAL
RER70F174R&	174	20	F	INDUCTIVE	R	P	DAL
RER70F178R&	178	20	F	INDUCTIVE	R	P	DAL
RER70F182R&	182	20	F	INDUCTIVE	R	P	DAL
RER70F187R&	187	20	F	INDUCTIVE	R	P	DAL
	Resistance	Power	Resistance		Level 1	Level 2	
Part Number	Value (Ohms)	Rating (W)	Tolerance	Winding	(FRL)(&)	(FRL)(&)	Manufacturer
RER70F191R&	191	20	F	INDUCTIVE	R	P	DAL
RER70F196R&	196	20	F	INDUCTIVE	R	P	DAL
RER70F200R&	200	20	F	INDUCTIVE	R	P	DAL
RER70F205R&	205	20	F	INDUCTIVE	R	P	DAL
RER70F210R&	210	20	F	INDUCTIVE	R	P	DAL
RER70F215R&	215	20	F	INDUCTIVE	R	P	DAL
RER70F221R&	221	20	F	INDUCTIVE	R	P	DAL
RER70F226R&	226	20	F	INDUCTIVE	R	P	DAL
RER70F232R&	232	20	F	INDUCTIVE	R	P	DAL
RER70F237R&	237	20	F	INDUCTIVE	R	P	DAL
RER70F243R&	243	20	F	INDUCTIVE	R	P	DAL
RER70F249R&	249	20	F	INDUCTIVE	R	P	DAL
RER70F255R&	255	20	F	INDUCTIVE	R	P	DAL
RER70F261R&	261	20	F	INDUCTIVE	R	P	DAL
	Resistance	Power	Resistance		Level 1	Level 2	
Part Number	Value (Ohms)	Rating (W)	Tolerance	Winding	(FRL)(&)	(FRL)(&)	Manufacturer
RER70F267R&	267	20	F	INDUCTIVE	R	P	DAL
RER70F274R&	274	20	F	INDUCTIVE	R	P	DAL
RER70F280R&	280	20	F	INDUCTIVE	R	P	DAL
RER70F287R&	287	20	F	INDUCTIVE	R	P	DAL
RER70F294R&	294	20	F	INDUCTIVE	R	P	DAL

RER70F301R&	301	20	F	INDUCTIVE	R	P	DAL
RER70F309R&	309	20	F	INDUCTIVE	R	P	DAL
RER70F316R&	316	20	F	INDUCTIVE	R	P	DAL
RER70F324R&	324	20	F	INDUCTIVE	R	P	DAL
RER70F332R&	332	20	F	INDUCTIVE	R	P	DAL
RER70F340R&	340	20	F	INDUCTIVE	R	P	DAL
RER70F348R&	348	20	F	INDUCTIVE	R	P	DAL
RER70F357R&	357	20	F	INDUCTIVE	R	P	DAL
RER70F365R&	365	20	F	INDUCTIVE	R	P	DAL
	Resistance	Power	Resistance		Level 1	Level 2	
Part Number	Value (Ohms)	Rating (W)	Tolerance	Winding	(FRL)(&)	(FRL)(&)	Manufacturer
RER70F374R&	374	20	F	INDUCTIVE	R	P	DAL
RER70F383R&	383	20	F	INDUCTIVE	R	P	DAL
RER70F392R&	392	20	F	INDUCTIVE	R	P	DAL
RER70F402R&	402	20	F	INDUCTIVE	R	P	DAL
RER70F412R&	412	20	F	INDUCTIVE	R	P	DAL
RER70F422R&	422	20	F	INDUCTIVE	R	P	DAL
RER70F432R&	432	20	F	INDUCTIVE	R	P	DAL
RER70F442R&	442	20	F	INDUCTIVE	R	P	DAL
RER70F453R&	453	20	F	INDUCTIVE	R	P	DAL
RER70F464R&	464	20	F	INDUCTIVE	R	P	DAL
RER70F475R&	475	20	F	INDUCTIVE	R	P	DAL
RER70F487R&	487	20	F	INDUCTIVE	R	P	DAL
RER70F499R&	499	20	F	INDUCTIVE	R	P	DAL
RER70F511R&	511	20	F	INDUCTIVE	R	P	DAL
	Resistance	Power	Resistance		Level 1	Level 2	
Part Number	Value (Ohms)	Rating (W)	Tolerance	Winding	(FRL)(&)	(FRL)(&)	Manufacturer
RER70F523R&	523	20	F	INDUCTIVE	R	P	DAL
RER70F536R&	536	20	F	INDUCTIVE	R	P	DAL
RER70F549R&	549	20	F	INDUCTIVE	R	P	DAL
RER70F562R&	562	20	F	INDUCTIVE	R	P	DAL
RER70F576R&	576	20	F	INDUCTIVE	R	P	DAL
RER70F590R&	590	20	F	INDUCTIVE	R	P	DAL
RER70F604R&	604	20	F	INDUCTIVE	R	P	DAL
RER70F619R&	619	20	F	INDUCTIVE	R	P	DAL
RER70F634R&	634	20	F	INDUCTIVE	R	P	DAL
RER70F649R&	649	20	F	INDUCTIVE	R	P	DAL
RER70F665R&	665	20	F	INDUCTIVE	R	P	DAL
RER70F681R&	681	20	F	INDUCTIVE	R	P	DAL
RER70F698R&	698	20	F	INDUCTIVE	R	P	DAL
	Resistance	Power	Resistance		Level 1	Level 2	
Part Number	Value (Ohms)	Rating (W)	Tolerance	Winding	(FRL)(&)	(FRL)(&)	Manufacturer
RER70F715R&	715	20	F	INDUCTIVE	R	P	DAL
RER70F732R&	732	20	F	INDUCTIVE	R	P	DAL
RER70F750R&	750	20	F	INDUCTIVE	R	P	DAL
RER70F768R&	768	20	F	INDUCTIVE	R	P	DAL
RER70F787R&	787	20	F	INDUCTIVE	R	P	DAL

RER70F806R&	806	20	F	INDUCTIVE	R	P	DAL
RER70F825R&	825	20	F	INDUCTIVE	R	P	DAL
RER70F845R&	845	20	F	INDUCTIVE	R	P	DAL
RER70F866R&	866	20	F	INDUCTIVE	R	P	DAL
RER70F887R&	887	20	F	INDUCTIVE	R	P	DAL
RER70F909R&	909	20	F	INDUCTIVE	R	P	DAL
RER70F931R&	931	20	F	INDUCTIVE	R	P	DAL
RER70F953R&	953	20	F	INDUCTIVE	R	P	DAL
RER70F976R&	976	20	F	INDUCTIVE	R	P	DAL
	Resistance	Power	Resistance		Level 1	Level 2	
Part Number	Value (Ohms)	Rating (W)	Tolerance	Winding	(FRL)(&)	(FRL)(&)	Manufacturer

RER70 Wirewound Resistors: 1000 Ohms through 9760 Ohms

	Resistance	Power	Resistance		Level 1	Level 2	
Part Number	Value (Ohms)	Rating (W)	Tolerance	Winding	(FRL)(&)	(FRL)(&)	Manufacturer
RER70F1001&	1,000	20	F	INDUCTIVE	R	P	DAL
RER70F1021&	1,020	20	F	INDUCTIVE	R	P	DAL
RER70F1051&	1,050	20	F	INDUCTIVE	R	P	DAL
RER70F1071&	1,070	20	F	INDUCTIVE	R	P	DAL
RER70F1101&	1,100	20	F	INDUCTIVE	R	P	DAL
RER70F1131&	1,130	20	F	INDUCTIVE	R	P	DAL
RER70F1151&	1,150	20	F	INDUCTIVE	R	P	DAL
RER70F1181&	1,180	20	F	INDUCTIVE	R	P	DAL
RER70F1211&	1,210	20	F	INDUCTIVE	R	P	DAL
RER70F1241&	1,240	20	F	INDUCTIVE	R	P	DAL
RER70F1271&	1,270	20	F	INDUCTIVE	R	P	DAL
RER70F1301&	1,300	20	F	INDUCTIVE	R	P	DAL
RER70F1331&	1,330	20	F	INDUCTIVE	R	P	DAL
	Resistance	Power	Resistance		Level 1	Level 2	
Part Number	Value (Ohms)	Rating (W)	Tolerance	Winding	(FRL)(&)	(FRL)(&)	Manufacturer
RER70F1371&	1,370	20	F	INDUCTIVE	R	P	DAL
RER70F1401&	1,400	20	F	INDUCTIVE	R	P	DAL
RER70F1431&	1,430	20	F	INDUCTIVE	R	P	DAL
RER70F1471&	1,470	20	F	INDUCTIVE	R	P	DAL
RER70F1501&	1,500	20	F	INDUCTIVE	R	P	DAL
RER70F1541&	1,540	20	F	INDUCTIVE	R	P	DAL
RER70F1581&	1,580	20	F	INDUCTIVE	R	P	DAL
RER70F1621&	1,620	20	F	INDUCTIVE	R	P	DAL
RER70F1651&	1,650	20	F	INDUCTIVE	R	P	DAL
RER70F1691&	1,690	20	F	INDUCTIVE	R	P	DAL
RER70F1741&	1,740	20	F	INDUCTIVE	R	P	DAL
RER70F1781&	1,780	20	F	INDUCTIVE	R	P	DAL
RER70F1821&	1,820	20	F	INDUCTIVE	R	P	DAL
RER70F1871&	1,870	20	F	INDUCTIVE	R	P	DAL

	Resistance	Power	Resistance		Level 1	Level 2	
Part Number	Value (Ohms)	Rating (W)	Tolerance	Winding	(FRL)(&)	(FRL)(&)	Manufacturer
RER70F1911&	1,910	20	F	INDUCTIVE	R	P	DAL
RER70F1961&	1,960	20	F	INDUCTIVE	R	P	DAL
RER70F2001&	2,000	20	F	INDUCTIVE	R	P	DAL
RER70F2051&	2,050	20	F	INDUCTIVE	R	P	DAL
RER70F2101&	2,100	20	F	INDUCTIVE	R	P	DAL
RER70F2151&	2,150	20	F	INDUCTIVE	R	P	DAL
RER70F2211&	2,210	20	F	INDUCTIVE	R	P	DAL
RER70F2261&	2,260	20	F	INDUCTIVE	R	P	DAL
RER70F2321&	2,320	20	F	INDUCTIVE	R	P	DAL
RER70F2371&	2,370	20	F	INDUCTIVE	R	P	DAL
RER70F2431&	2,430	20	F	INDUCTIVE	R	P	DAL
RER70F2491&	2,490	20	F	INDUCTIVE	R	P	DAL
RER70F2551&	2,550	20	F	INDUCTIVE	R	P	DAL
RER70F2611&	2,610	20	F	INDUCTIVE	R	P	DAL
	Resistance	Power	Resistance		Level 1	Level 2	
Part Number	Value (Ohms)	Rating (W)	Tolerance	Winding	(FRL)(&)	(FRL)(&)	Manufacturer
RER70F2671&	2,670	20	F	INDUCTIVE	R	P	DAL
RER70F2741&	2,740	20	F	INDUCTIVE	R	P	DAL
RER70F2801&	2,800	20	F	INDUCTIVE	R	P	DAL
RER70F2871&	2,870	20	F	INDUCTIVE	R	P	DAL
RER70F2941&	2,940	20	F	INDUCTIVE	R	P	DAL
RER70F3011&	3,010	20	F	INDUCTIVE	R	P	DAL
RER70F3091&	3,090	20	F	INDUCTIVE	R	P	DAL
RER70F3161&	3,160	20	F	INDUCTIVE	R	P	DAL
RER70F3241&	3,240	20	F	INDUCTIVE	R	P	DAL
RER70F3321&	3,320	20	F	INDUCTIVE	R	P	DAL
RER70F3401&	3,400	20	F	INDUCTIVE	R	P	DAL
RER70F3481&	3,480	20	F	INDUCTIVE	R	P	DAL
RER70F3571&	3,570	20	F	INDUCTIVE	R	P	DAL
RER70F3651&	3,650	20	F	INDUCTIVE	R	P	DAL
	Resistance	Power	Resistance		Level 1	Level 2	
Part Number	Value (Ohms)	Rating (W)	Tolerance	Winding	(FRL)(&)	(FRL)(&)	Manufacturer
RER70F3741&	3,740	20	F	INDUCTIVE	R	P	DAL
RER70F3831&	3,830	20	F	INDUCTIVE	R	P	DAL
RER70F3921&	3,920	20	F	INDUCTIVE	R	P	DAL
RER70F4021&	4,020	20	F	INDUCTIVE	R	P	DAL
RER70F4121&	4,120	20	F	INDUCTIVE	R	P	DAL
RER70F4221&	4,220	20	F	INDUCTIVE	R	P	DAL
RER70F4321&	4,320	20	F	INDUCTIVE	R	P	DAL
RER70F4421&	4,420	20	F	INDUCTIVE	R	P	DAL
RER70F4531&	4,530	20	F	INDUCTIVE	R	P	DAL
RER70F4641&	4,640	20	F	INDUCTIVE	R	P	DAL
RER70F4751&	4,750	20	F	INDUCTIVE	R	P	DAL
RER70F4871&	4,870	20	F	INDUCTIVE	R	P	DAL
RER70F4991&	4,990	20	F	INDUCTIVE	R	P	DAL

RER70F5111&	5,110	20	F	INDUCTIVE	R	P	DAL
	Resistance	Power	Resistance		Level 1	Level 2	
Part Number	Value (Ohms)	Rating (W)	Tolerance	Winding	(FRL)(&)	(FRL)(&)	Manufacturer
RER70F5231&	5,230	20	F	INDUCTIVE	R	P	DAL
RER70F5361&	5,360	20	F	INDUCTIVE	R	P	DAL
RER70F5491&	5,490	20	F	INDUCTIVE	R	P	DAL
RER70F5621&	5,620	20	F	INDUCTIVE	R	P	DAL
RER70F5761&	5,760	20	F	INDUCTIVE	R	P	DAL
RER70F5901&	5,900	20	F	INDUCTIVE	R	P	DAL
RER70F6041&	6,040	20	F	INDUCTIVE	R	P	DAL
RER70F6191&	6,190	20	F	INDUCTIVE	R	P	DAL
RER70F6341&	6,340	20	F	INDUCTIVE	R	P	DAL
RER70F6491&	6,490	20	F	INDUCTIVE	R	P	DAL
RER70F6651&	6,650	20	F	INDUCTIVE	R	P	DAL
RER70F6811&	6,810	20	F	INDUCTIVE	R	P	DAL
RER70F6981&	6,980	20	F	INDUCTIVE	R	P	DAL
	Resistance	Power	Resistance		Level 1	Level 2	
Part Number	Value (Ohms)	Rating (W)	Tolerance	Winding	(FRL)(&)	(FRL)(&)	Manufacturer
RER70F7151&	7,150	20	F	INDUCTIVE	R	P	DAL
RER70F7321&	7,320	20	F	INDUCTIVE	R	P	DAL
RER70F7501&	7,500	20	F	INDUCTIVE	R	P	DAL
RER70F7681&	7,680	20	F	INDUCTIVE	R	P	DAL
RER70F7871&	7,870	20	F	INDUCTIVE	R	P	DAL
RER70F8061&	8,060	20	F	INDUCTIVE	R	P	DAL
RER70F8251&	8,250	20	F	INDUCTIVE	R	P	DAL
RER70F8451&	8,450	20	F	INDUCTIVE	R	P	DAL
RER70F8661&	8,660	20	F	INDUCTIVE	R	P	DAL
RER70F8871&	8,870	20	F	INDUCTIVE	R	P	DAL
RER70F9091&	9,090	20	F	INDUCTIVE	R	P	DAL
RER70F9311&	9,310	20	F	INDUCTIVE	R	P	DAL
RER70F9531&	9,530	20	F	INDUCTIVE	R	P	DAL
RER70F9761&	9,760	20	F	INDUCTIVE	R	P	DAL

RER70 Wirewound Resistors

10000 Ohms through 12100 Ohms

	Resistance	Power	Resistance		Level 1	Level 2	
Part Number	Value (Ohms)	Rating (W)	Tolerance	Winding	(FRL)(&)	(FRL)(&)	Manufacturer
RER70F1002&	10,000	20	F	INDUCTIVE	R	P	DAL
RER70F1022&	10,200	20	F	INDUCTIVE	R	P	DAL
RER70F1052&	10,500	20	F	INDUCTIVE	R	P	DAL
RER70F1072&	10,700	20	F	INDUCTIVE	R	P	DAL
RER70F1102&	11,000	20	F	INDUCTIVE	R	P	DAL
RER70F1132&	11,300	20	F	INDUCTIVE	R	P	DAL
RER70F1152&	11,500	20	F	INDUCTIVE	R	P	DAL

RER70F1182&	11,800	20	F	INDUCTIVE	R	P	DAL
RER70F1212&	12,100	20	F	INDUCTIVE	R	P	DAL

RER75 Wirewound Resistors

	Resistance	Power	Resistance		Level 1	Level 2	
Part Number	Value (Ohms)	Rating (W)	Tolerance	Winding	(FRL)(&)	(FRL)(&)	Manufacturer
RER75FR100&	0.100	30	F	INDUCTIVE	R	P	DAL
RER75FR102&	0.102	30	F	INDUCTIVE	R	P	DAL
RER75FR105&	0.105	30	F	INDUCTIVE	R	P	DAL
RER75FR107&	0.107	30	F	INDUCTIVE	R	P	DAL
RER75FR110&	0.110	30	F	INDUCTIVE	R	P	DAL
RER75FR113&	0.113	30	F	INDUCTIVE	R	P	DAL
RER75FR115&	0.115	30	F	INDUCTIVE	R	P	DAL
RER75FR118&	0.118	30	F	INDUCTIVE	R	P	DAL
RER75FR121&	0.121	30	F	INDUCTIVE	R	P	DAL
RER75FR124&	0.124	30	F	INDUCTIVE	R	P	DAL
RER75FR127&	0.127	30	F	INDUCTIVE	R	P	DAL
RER75FR130&	0.130	30	F	INDUCTIVE	R	P	DAL
RER75FR133&	0.133	30	F	INDUCTIVE	R	P	DAL
RER75FR137&	0.137	30	F	INDUCTIVE	R	P	DAL
RER75FR140&	0.140	30	F	INDUCTIVE	R	P	DAL
RER75FR143&	0.143	30	F	INDUCTIVE	R	P	DAL
RER75FR147&	0.147	30	F	INDUCTIVE	R	P	DAL
RER75FR150&	0.150	30	F	INDUCTIVE	R	P	DAL
RER75FR154&	0.154	30	F	INDUCTIVE	R	P	DAL
RER75FR158&	0.158	30	F	INDUCTIVE	R	P	DAL
RER75FR162&	0.162	30	F	INDUCTIVE	R	P	DAL
RER75FR165&	0.165	30	F	INDUCTIVE	R	P	DAL
RER75FR169&	0.169	30	F	INDUCTIVE	R	P	DAL
RER75FR174&	0.174	30	F	INDUCTIVE	R	P	DAL
RER75FR178&	0.178	30	F	INDUCTIVE	R	P	DAL
RER75FR182&	0.182	30	F	INDUCTIVE	R	P	DAL
RER75FR187&	0.187	30	F	INDUCTIVE	R	P	DAL
RER75FR191&	0.191	30	F	INDUCTIVE	R	P	DAL
RER75FR196&	0.196	30	F	INDUCTIVE	R	P	DAL
RER75FR200&	0.200	30	F	INDUCTIVE	R	P	DAL
RER75FR205&	0.205	30	F	INDUCTIVE	R	P	DAL
RER75FR210&	0.210	30	F	INDUCTIVE	R	P	DAL
RER75FR215&	0.215	30	F	INDUCTIVE	R	P	DAL
RER75FR221&	0.221	30	F	INDUCTIVE	R	P	DAL
RER75FR226&	0.226	30	F	INDUCTIVE	R	P	DAL
RER75FR232&	0.232	30	F	INDUCTIVE	R	P	DAL
RER75FR237&	0.237	30	F	INDUCTIVE	R	P	DAL
RER75FR243&	0.243	30	F	INDUCTIVE	R	P	DAL

RER75FR249&	0.249	30	F	INDUCTIVE	R	P	DAL
RER75FR255&	0.255	30	F	INDUCTIVE	R	P	DAL
RER75FR261&	0.261	30	F	INDUCTIVE	R	P	DAL
RER75FR267&	0.267	30	F	INDUCTIVE	R	P	DAL
RER75FR274&	0.274	30	F	INDUCTIVE	R	P	DAL
RER75FR280&	0.280	30	F	INDUCTIVE	R	P	DAL
RER75FR287&	0.287	30	F	INDUCTIVE	R	P	DAL
RER75FR294&	0.294	30	F	INDUCTIVE	R	P	DAL
RER75FR301&	0.301	30	F	INDUCTIVE	R	P	DAL
RER75FR309&	0.309	30	F	INDUCTIVE	R	P	DAL
RER75FR316&	0.316	30	F	INDUCTIVE	R	P	DAL
RER75FR324&	0.324	30	F	INDUCTIVE	R	P	DAL
RER75FR332&	0.332	30	F	INDUCTIVE	R	P	DAL
RER75FR340&	0.340	30	F	INDUCTIVE	R	P	DAL
RER75FR348&	0.348	30	F	INDUCTIVE	R	P	DAL
RER75FR357&	0.357	30	F	INDUCTIVE	R	P	DAL
RER75FR365&	0.365	30	F	INDUCTIVE	R	P	DAL
RER75FR374&	0.374	30	F	INDUCTIVE	R	P	DAL
RER75FR383&	0.383	30	F	INDUCTIVE	R	P	DAL
RER75FR392&	0.392	30	F	INDUCTIVE	R	P	DAL
RER75FR402&	0.402	30	F	INDUCTIVE	R	P	DAL
RER75FR412&	0.412	30	F	INDUCTIVE	R	P	DAL
RER75FR422&	0.422	30	F	INDUCTIVE	R	P	DAL
RER75FR432&	0.432	30	F	INDUCTIVE	R	P	DAL
RER75FR442&	0.442	30	F	INDUCTIVE	R	P	DAL
RER75FR453&	0.453	30	F	INDUCTIVE	R	P	DAL
RER75FR464&	0.464	30	F	INDUCTIVE	R	P	DAL
RER75FR475&	0.475	30	F	INDUCTIVE	R	P	DAL
RER75FR487&	0.487	30	F	INDUCTIVE	R	P	DAL
RER75FR499&	0.499	30	F	INDUCTIVE	R	P	DAL
RER75FR511&	0.511	30	F	INDUCTIVE	R	P	DAL
RER75FR523&	0.523	30	F	INDUCTIVE	R	P	DAL
RER75FR536&	0.536	30	F	INDUCTIVE	R	P	DAL
RER75FR549&	0.549	30	F	INDUCTIVE	R	P	DAL
RER75FR562&	0.562	30	F	INDUCTIVE	R	P	DAL
RER75FR576&	0.576	30	F	INDUCTIVE	R	P	DAL
RER75FR590&	0.590	30	F	INDUCTIVE	R	P	DAL
RER75FR604&	0.604	30	F	INDUCTIVE	R	P	DAL
RER75FR619&	0.619	30	F	INDUCTIVE	R	P	DAL
RER75FR634&	0.634	30	F	INDUCTIVE	R	P	DAL
RER75FR649&	0.649	30	F	INDUCTIVE	R	P	DAL
RER75FR665&	0.665	30	F	INDUCTIVE	R	P	DAL
RER75FR681&	0.681	30	F	INDUCTIVE	R	P	DAL
RER75FR698&	0.698	30	F	INDUCTIVE	R	P	DAL
RER75FR715&	0.715	30	F	INDUCTIVE	R	P	DAL
RER75FR732&	0.732	30	F	INDUCTIVE	R	P	DAL
RER75FR750&	0.750	30	F	INDUCTIVE	R	P	DAL

RER75FR768&	0.768	30	F	INDUCTIVE	R	P	DAL
RER75FR787&	0.787	30	F	INDUCTIVE	R	P	DAL
RER75FR806&	0.806	30	F	INDUCTIVE	R	P	DAL
RER75FR825&	0.825	30	F	INDUCTIVE	R	P	DAL
RER75FR845&	0.845	30	F	INDUCTIVE	R	P	DAL
RER75FR866&	0.866	30	F	INDUCTIVE	R	P	DAL
RER75FR887&	0.887	30	F	INDUCTIVE	R	P	DAL
RER75FR909&	0.909	30	F	INDUCTIVE	R	P	DAL
RER75FR931&	0.931	30	F	INDUCTIVE	R	P	DAL
RER75FR953&	0.953	30	F	INDUCTIVE	R	P	DAL
RER75FR976&	0.976	30	F	INDUCTIVE	R	P	DAL
RER75F1R00&	1.00	30	F	INDUCTIVE	R	P	DAL
RER75F1R02&	1.02	30	F	INDUCTIVE	R	P	DAL
RER75F1R05&	1.05	30	F	INDUCTIVE	R	P	DAL
RER75F1R07&	1.07	30	F	INDUCTIVE	R	P	DAL
RER75F1R10&	1.10	30	F	INDUCTIVE	R	P	DAL
RER75F1R13&	1.13	30	F	INDUCTIVE	R	P	DAL
RER75F1R15&	1.15	30	F	INDUCTIVE	R	P	DAL
RER75F1R18&	1.18	30	F	INDUCTIVE	R	P	DAL
RER75F1R21&	1.21	30	F	INDUCTIVE	R	P	DAL
RER75F1R24&	1.24	30	F	INDUCTIVE	R	P	DAL
RER75F1R27&	1.27	30	F	INDUCTIVE	R	P	DAL
RER75F1R30&	1.30	30	F	INDUCTIVE	R	P	DAL
RER75F1R33&	1.33	30	F	INDUCTIVE	R	P	DAL
RER75F1R37&	1.37	30	F	INDUCTIVE	R	P	DAL
RER75F1R40&	1.40	30	F	INDUCTIVE	R	P	DAL
RER75F1R43&	1.43	30	F	INDUCTIVE	R	P	DAL
RER75F1R47&	1.47	30	F	INDUCTIVE	R	P	DAL
RER75F1R50&	1.50	30	F	INDUCTIVE	R	P	DAL
RER75F1R54&	1.54	30	F	INDUCTIVE	R	P	DAL
RER75F1R58&	1.58	30	F	INDUCTIVE	R	P	DAL
RER75F1R62&	1.62	30	F	INDUCTIVE	R	P	DAL
RER75F1R65&	1.65	30	F	INDUCTIVE	R	P	DAL
RER75F1R69&	1.69	30	F	INDUCTIVE	R	P	DAL
RER75F1R74&	1.74	30	F	INDUCTIVE	R	P	DAL
RER75F1R78&	1.78	30	F	INDUCTIVE	R	P	DAL
RER75F1R82&	1.82	30	F	INDUCTIVE	R	P	DAL
RER75F1R87&	1.87	30	F	INDUCTIVE	R	P	DAL
RER75F1R91&	1.91	30	F	INDUCTIVE	R	P	DAL
RER75F1R96&	1.96	30	F	INDUCTIVE	R	P	DAL
RER75F2R00&	2.00	30	F	INDUCTIVE	R	P	DAL
RER75F2R05&	2.05	30	F	INDUCTIVE	R	P	DAL
RER75F2R10&	2.10	30	F	INDUCTIVE	R	P	DAL
RER75F2R15&	2.15	30	F	INDUCTIVE	R	P	DAL
RER75F2R21&	2.21	30	F	INDUCTIVE	R	P	DAL
RER75F2R26&	2.26	30	F	INDUCTIVE	R	P	DAL
RER75F2R32&	2.32	30	F	INDUCTIVE	R	P	DAL

RER75F2R37&	2.37	30	F	INDUCTIVE	R	P	DAL
RER75F2R43&	2.43	30	F	INDUCTIVE	R	P	DAL
RER75F2R49&	2.49	30	F	INDUCTIVE	R	P	DAL
RER75F2R55&	2.55	30	F	INDUCTIVE	R	P	DAL
RER75F2R61&	2.61	30	F	INDUCTIVE	R	P	DAL
RER75F2R67&	2.67	30	F	INDUCTIVE	R	P	DAL
RER75F2R74&	2.74	30	F	INDUCTIVE	R	P	DAL
RER75F2R80&	2.80	30	F	INDUCTIVE	R	P	DAL
RER75F2R87&	2.87	30	F	INDUCTIVE	R	P	DAL
RER75F2R94&	2.94	30	F	INDUCTIVE	R	P	DAL
RER75F3R01&	3.01	30	F	INDUCTIVE	R	P	DAL
RER75F3R09&	3.09	30	F	INDUCTIVE	R	P	DAL
RER75F3R16&	3.16	30	F	INDUCTIVE	R	P	DAL
RER75F3R24&	3.24	30	F	INDUCTIVE	R	P	DAL
RER75F3R32&	3.32	30	F	INDUCTIVE	R	P	DAL
RER75F3R40&	3.40	30	F	INDUCTIVE	R	P	DAL
RER75F3R48&	3.48	30	F	INDUCTIVE	R	P	DAL
RER75F3R57&	3.57	30	F	INDUCTIVE	R	P	DAL
RER75F3R65&	3.65	30	F	INDUCTIVE	R	P	DAL
RER75F3R74&	3.74	30	F	INDUCTIVE	R	P	DAL
RER75F3R83&	3.83	30	F	INDUCTIVE	R	P	DAL
RER75F3R92&	3.92	30	F	INDUCTIVE	R	P	DAL
RER75F4R02&	4.02	30	F	INDUCTIVE	R	P	DAL
RER75F4R12&	4.12	30	F	INDUCTIVE	R	P	DAL
RER75F4R22&	4.22	30	F	INDUCTIVE	R	P	DAL
RER75F4R32&	4.32	30	F	INDUCTIVE	R	P	DAL
RER75F4R42&	4.42	30	F	INDUCTIVE	R	P	DAL
RER75F4R53&	4.53	30	F	INDUCTIVE	R	P	DAL
RER75F4R64&	4.64	30	F	INDUCTIVE	R	P	DAL
RER75F4R75&	4.75	30	F	INDUCTIVE	R	P	DAL
RER75F4R87&	4.87	30	F	INDUCTIVE	R	P	DAL
RER75F4R99&	4.99	30	F	INDUCTIVE	R	P	DAL
RER75F5R11&	5.11	30	F	INDUCTIVE	R	P	DAL
RER75F5R23&	5.23	30	F	INDUCTIVE	R	P	DAL
RER75F5R36&	5.36	30	F	INDUCTIVE	R	P	DAL
RER75F5R49&	5.49	30	F	INDUCTIVE	R	P	DAL
RER75F5R62&	5.62	30	F	INDUCTIVE	R	P	DAL
RER75F5R76&	5.76	30	F	INDUCTIVE	R	P	DAL
RER75F5R90&	5.90	30	F	INDUCTIVE	R	P	DAL
RER75F6R04&	6.04	30	F	INDUCTIVE	R	P	DAL
RER75F6R19&	6.19	30	F	INDUCTIVE	R	P	DAL
RER75F6R34&	6.34	30	F	INDUCTIVE	R	P	DAL
RER75F6R49&	6.49	30	F	INDUCTIVE	R	P	DAL
RER75F6R65&	6.65	30	F	INDUCTIVE	R	P	DAL
RER75F6R81&	6.81	30	F	INDUCTIVE	R	P	DAL
RER75F6R98&	6.98	30	F	INDUCTIVE	R	P	DAL
RER75F7R15&	7.15	30	F	INDUCTIVE	R	P	DAL

RER75F7R32&	7.32	30	F	INDUCTIVE	R	P	DAL
RER75F7R50&	7.50	30	F	INDUCTIVE	R	P	DAL
RER75F7R68&	7.68	30	F	INDUCTIVE	R	P	DAL
RER75F7R87&	7.87	30	F	INDUCTIVE	R	P	DAL
RER75F8R06&	8.06	30	F	INDUCTIVE	R	P	DAL
RER75F8R25&	8.25	30	F	INDUCTIVE	R	P	DAL
RER75F8R45&	8.45	30	F	INDUCTIVE	R	P	DAL
RER75F8R66&	8.66	30	F	INDUCTIVE	R	P	DAL
RER75F8R87&	8.87	30	F	INDUCTIVE	R	P	DAL
RER75F9R09&	9.09	30	F	INDUCTIVE	R	P	DAL
RER75F9R31&	9.31	30	F	INDUCTIVE	R	P	DAL
RER75F9R53&	9.53	30	F	INDUCTIVE	R	P	DAL
RER75F9R76&	9.76	30	F	INDUCTIVE	R	P	DAL
RER75F10R0&	10.0	30	F	INDUCTIVE	R	P	DAL
RER75F10R2&	10.2	30	F	INDUCTIVE	R	P	DAL
RER75F10R5&	10.5	30	F	INDUCTIVE	R	P	DAL
RER75F10R7&	10.7	30	F	INDUCTIVE	R	P	DAL
RER75F11R0&	11.0	30	F	INDUCTIVE	R	P	DAL
RER75F11R3&	11.3	30	F	INDUCTIVE	R	P	DAL
RER75F11R5&	11.5	30	F	INDUCTIVE	R	P	DAL
RER75F11R8&	11.8	30	F	INDUCTIVE	R	P	DAL
RER75F12R1&	12.1	30	F	INDUCTIVE	R	P	DAL
RER75F12R4&	12.4	30	F	INDUCTIVE	R	P	DAL
RER75F12R7&	12.7	30	F	INDUCTIVE	R	P	DAL
RER75F13R0&	13.0	30	F	INDUCTIVE	R	P	DAL
RER75F13R3&	13.3	30	F	INDUCTIVE	R	P	DAL
RER75F13R7&	13.7	30	F	INDUCTIVE	R	P	DAL
RER75F14R0&	14.0	30	F	INDUCTIVE	R	P	DAL
RER75F14R3&	14.3	30	F	INDUCTIVE	R	P	DAL
RER75F14R7&	14.7	30	F	INDUCTIVE	R	P	DAL
RER75F15R0&	15.0	30	F	INDUCTIVE	R	P	DAL
RER75F15R4&	15.4	30	F	INDUCTIVE	R	P	DAL
RER75F15R8&	15.8	30	F	INDUCTIVE	R	P	DAL
RER75F16R2&	16.2	30	F	INDUCTIVE	R	P	DAL
RER75F16R5&	16.5	30	F	INDUCTIVE	R	P	DAL
RER75F16R9&	16.9	30	F	INDUCTIVE	R	P	DAL
RER75F17R4&	17.4	30	F	INDUCTIVE	R	P	DAL
RER75F17R8&	17.8	30	F	INDUCTIVE	R	P	DAL
RER75F18R2&	18.2	30	F	INDUCTIVE	R	P	DAL
RER75F18R7&	18.7	30	F	INDUCTIVE	R	P	DAL
RER75F19R1&	19.1	30	F	INDUCTIVE	R	P	DAL
RER75F19R6&	19.6	30	F	INDUCTIVE	R	P	DAL
RER75F20R0&	20.0	30	F	INDUCTIVE	R	P	DAL
RER75F20R5&	20.5	30	F	INDUCTIVE	R	P	DAL
RER75F21R0&	21.0	30	F	INDUCTIVE	R	P	DAL
RER75F21R5&	21.5	30	F	INDUCTIVE	R	P	DAL
RER75F22R1&	22.1	30	F	INDUCTIVE	R	P	DAL

RER75F22R6&	22.6	30	F	INDUCTIVE	R	P	DAL
RER75F23R2&	23.2	30	F	INDUCTIVE	R	P	DAL
RER75F23R7&	23.7	30	F	INDUCTIVE	R	P	DAL
RER75F24R3&	24.3	30	F	INDUCTIVE	R	P	DAL
RER75F24R9&	24.9	30	F	INDUCTIVE	R	P	DAL
RER75F25R5&	25.5	30	F	INDUCTIVE	R	P	DAL
RER75F26R1&	26.1	30	F	INDUCTIVE	R	P	DAL
RER75F26R7&	26.7	30	F	INDUCTIVE	R	P	DAL
RER75F27R4&	27.4	30	F	INDUCTIVE	R	P	DAL
RER75F28R0&	28.0	30	F	INDUCTIVE	R	P	DAL
RER75F28R7&	28.7	30	F	INDUCTIVE	R	P	DAL
RER75F29R4&	29.4	30	F	INDUCTIVE	R	P	DAL
RER75F30R1&	30.1	30	F	INDUCTIVE	R	P	DAL
RER75F30R9&	30.9	30	F	INDUCTIVE	R	P	DAL
RER75F31R6&	31.6	30	F	INDUCTIVE	R	P	DAL
RER75F32R4&	32.4	30	F	INDUCTIVE	R	P	DAL
RER75F33R2&	33.2	30	F	INDUCTIVE	R	P	DAL
RER75F34R0&	34.0	30	F	INDUCTIVE	R	P	DAL
RER75F34R8&	34.8	30	F	INDUCTIVE	R	P	DAL
RER75F35R7&	35.7	30	F	INDUCTIVE	R	P	DAL
RER75F36R5&	36.5	30	F	INDUCTIVE	R	P	DAL
RER75F37R4&	37.4	30	F	INDUCTIVE	R	P	DAL
RER75F38R3&	38.3	30	F	INDUCTIVE	R	P	DAL
RER75F39R2&	39.2	30	F	INDUCTIVE	R	P	DAL
RER75F40R2&	40.2	30	F	INDUCTIVE	R	P	DAL
RER75F41R2&	41.2	30	F	INDUCTIVE	R	P	DAL
RER75F42R2&	42.2	30	F	INDUCTIVE	R	P	DAL
RER75F43R2&	43.2	30	F	INDUCTIVE	R	P	DAL
RER75F44R2&	44.2	30	F	INDUCTIVE	R	P	DAL
RER75F45R3&	45.3	30	F	INDUCTIVE	R	P	DAL
RER75F46R4&	46.4	30	F	INDUCTIVE	R	P	DAL
RER75F47R5&	47.5	30	F	INDUCTIVE	R	P	DAL
RER75F48R7&	48.7	30	F	INDUCTIVE	R	P	DAL
RER75F49R9&	49.9	30	F	INDUCTIVE	R	P	DAL
RER75F51R1&	51.1	30	F	INDUCTIVE	R	P	DAL
RER75F52R3&	52.3	30	F	INDUCTIVE	R	P	DAL
RER75F53R6&	53.6	30	F	INDUCTIVE	R	P	DAL
RER75F54R9&	54.9	30	F	INDUCTIVE	R	P	DAL
RER75F56R2&	56.2	30	F	INDUCTIVE	R	P	DAL
RER75F57R6&	57.6	30	F	INDUCTIVE	R	P	DAL
RER75F59R0&	59.0	30	F	INDUCTIVE	R	P	DAL
RER75F60R4&	60.4	30	F	INDUCTIVE	R	P	DAL
RER75F61R9&	61.9	30	F	INDUCTIVE	R	P	DAL
RER75F63R4&	63.4	30	F	INDUCTIVE	R	P	DAL
RER75F64R9&	64.9	30	F	INDUCTIVE	R	P	DAL
RER75F66R5&	66.5	30	F	INDUCTIVE	R	P	DAL
RER75F68R1&	68.1	30	F	INDUCTIVE	R	P	DAL

RER75F69R8&	69.8	30	F	INDUCTIVE	R	P	DAL
RER75F71R5&	71.5	30	F	INDUCTIVE	R	P	DAL
RER75F73R2&	73.2	30	F	INDUCTIVE	R	P	DAL
RER75F75R0&	75.0	30	F	INDUCTIVE	R	P	DAL
RER75F76R8&	76.8	30	F	INDUCTIVE	R	P	DAL
RER75F78R7&	78.7	30	F	INDUCTIVE	R	P	DAL
RER75F80R6&	80.6	30	F	INDUCTIVE	R	P	DAL
RER75F82R5&	82.5	30	F	INDUCTIVE	R	P	DAL
RER75F84R5&	84.5	30	F	INDUCTIVE	R	P	DAL
RER75F86R6&	86.6	30	F	INDUCTIVE	R	P	DAL
RER75F88R7&	88.7	30	F	INDUCTIVE	R	P	DAL
RER75F90R9&	90.9	30	F	INDUCTIVE	R	P	DAL
RER75F93R1&	93.1	30	F	INDUCTIVE	R	P	DAL
RER75F95R3&	95.3	30	F	INDUCTIVE	R	P	DAL
RER75F97R6&	97.6	30	F	INDUCTIVE	R	P	DAL
RER75F100R&	100	30	F	INDUCTIVE	R	P	DAL
RER75F102R&	102	30	F	INDUCTIVE	R	P	DAL
RER75F105R&	105	30	F	INDUCTIVE	R	P	DAL
RER75F107R&	107	30	F	INDUCTIVE	R	P	DAL
RER75F110R&	110	30	F	INDUCTIVE	R	P	DAL
RER75F113R&	113	30	F	INDUCTIVE	R	P	DAL
RER75F115R&	115	30	F	INDUCTIVE	R	P	DAL
RER75F118R&	118	30	F	INDUCTIVE	R	P	DAL
RER75F121R&	121	30	F	INDUCTIVE	R	P	DAL
RER75F124R&	124	30	F	INDUCTIVE	R	P	DAL
RER75F127R&	127	30	F	INDUCTIVE	R	P	DAL
RER75F130R&	130	30	F	INDUCTIVE	R	P	DAL
RER75F133R&	133	30	F	INDUCTIVE	R	P	DAL
RER75F137R&	137	30	F	INDUCTIVE	R	P	DAL
RER75F140R&	140	30	F	INDUCTIVE	R	P	DAL
RER75F143R&	143	30	F	INDUCTIVE	R	P	DAL
RER75F147R&	147	30	F	INDUCTIVE	R	P	DAL
RER75F150R&	150	30	F	INDUCTIVE	R	P	DAL
RER75F154R&	154	30	F	INDUCTIVE	R	P	DAL
RER75F158R&	158	30	F	INDUCTIVE	R	P	DAL
RER75F162R&	162	30	F	INDUCTIVE	R	P	DAL
RER75F165R&	165	30	F	INDUCTIVE	R	P	DAL
RER75F169R&	169	30	F	INDUCTIVE	R	P	DAL
RER75F174R&	174	30	F	INDUCTIVE	R	P	DAL
RER75F178R&	178	30	F	INDUCTIVE	R	P	DAL
RER75F182R&	182	30	F	INDUCTIVE	R	P	DAL
RER75F187R&	187	30	F	INDUCTIVE	R	P	DAL
RER75F191R&	191	30	F	INDUCTIVE	R	P	DAL
RER75F196R&	196	30	F	INDUCTIVE	R	P	DAL
RER75F200R&	200	30	F	INDUCTIVE	R	P	DAL
RER75F205R&	205	30	F	INDUCTIVE	R	P	DAL
RER75F210R&	210	30	F	INDUCTIVE	R	P	DAL

RER75F215R&	215	30	F	INDUCTIVE	R	P	DAL
RER75F221R&	221	30	F	INDUCTIVE	R	P	DAL
RER75F226R&	226	30	F	INDUCTIVE	R	P	DAL
RER75F232R&	232	30	F	INDUCTIVE	R	P	DAL
RER75F237R&	237	30	F	INDUCTIVE	R	P	DAL
RER75F243R&	243	30	F	INDUCTIVE	R	P	DAL
RER75F249R&	249	30	F	INDUCTIVE	R	P	DAL
RER75F255R&	255	30	F	INDUCTIVE	R	P	DAL
RER75F261R&	261	30	F	INDUCTIVE	R	P	DAL
RER75F267R&	267	30	F	INDUCTIVE	R	P	DAL
RER75F274R&	274	30	F	INDUCTIVE	R	P	DAL
RER75F280R&	280	30	F	INDUCTIVE	R	P	DAL
RER75F287R&	287	30	F	INDUCTIVE	R	P	DAL
RER75F294R&	294	30	F	INDUCTIVE	R	P	DAL
RER75F301R&	301	30	F	INDUCTIVE	R	P	DAL
RER75F309R&	309	30	F	INDUCTIVE	R	P	DAL
RER75F316R&	316	30	F	INDUCTIVE	R	P	DAL
RER75F324R&	324	30	F	INDUCTIVE	R	P	DAL
RER75F332R&	332	30	F	INDUCTIVE	R	P	DAL
RER75F340R&	340	30	F	INDUCTIVE	R	P	DAL
RER75F348R&	348	30	F	INDUCTIVE	R	P	DAL
RER75F357R&	357	30	F	INDUCTIVE	R	P	DAL
RER75F365R&	365	30	F	INDUCTIVE	R	P	DAL
RER75F374R&	374	30	F	INDUCTIVE	R	P	DAL
RER75F383R&	383	30	F	INDUCTIVE	R	P	DAL
RER75F392R&	392	30	F	INDUCTIVE	R	P	DAL
RER75F402R&	402	30	F	INDUCTIVE	R	P	DAL
RER75F412R&	412	30	F	INDUCTIVE	R	P	DAL
RER75F422R&	422	30	F	INDUCTIVE	R	P	DAL
RER75F432R&	432	30	F	INDUCTIVE	R	P	DAL
RER75F442R&	442	30	F	INDUCTIVE	R	P	DAL
RER75F453R&	453	30	F	INDUCTIVE	R	P	DAL
RER75F464R&	464	30	F	INDUCTIVE	R	P	DAL
RER75F475R&	475	30	F	INDUCTIVE	R	P	DAL
RER75F487R&	487	30	F	INDUCTIVE	R	P	DAL
RER75F499R&	499	30	F	INDUCTIVE	R	P	DAL
RER75F511R&	511	30	F	INDUCTIVE	R	P	DAL
RER75F523R&	523	30	F	INDUCTIVE	R	P	DAL
RER75F536R&	536	30	F	INDUCTIVE	R	P	DAL
RER75F549R&	549	30	F	INDUCTIVE	R	P	DAL
RER75F562R&	562	30	F	INDUCTIVE	R	P	DAL
RER75F576R&	576	30	F	INDUCTIVE	R	P	DAL
RER75F590R&	590	30	F	INDUCTIVE	R	P	DAL
RER75F604R&	604	30	F	INDUCTIVE	R	P	DAL
RER75F619R&	619	30	F	INDUCTIVE	R	P	DAL
RER75F634R&	634	30	F	INDUCTIVE	R	P	DAL
RER75F649R&	649	30	F	INDUCTIVE	R	P	DAL

RER75F665R&	665	30	F	INDUCTIVE	R	P	DAL
RER75F681R&	681	30	F	INDUCTIVE	R	P	DAL
RER75F698R&	698	30	F	INDUCTIVE	R	P	DAL
RER75F715R&	715	30	F	INDUCTIVE	R	P	DAL
RER75F732R&	732	30	F	INDUCTIVE	R	P	DAL
RER75F750R&	750	30	F	INDUCTIVE	R	P	DAL
RER75F768R&	768	30	F	INDUCTIVE	R	P	DAL
RER75F787R&	787	30	F	INDUCTIVE	R	P	DAL
RER75F806R&	806	30	F	INDUCTIVE	R	P	DAL
RER75F825R&	825	30	F	INDUCTIVE	R	P	DAL
RER75F845R&	845	30	F	INDUCTIVE	R	P	DAL
RER75F866R&	866	30	F	INDUCTIVE	R	P	DAL
RER75F887R&	887	30	F	INDUCTIVE	R	P	DAL
RER75F909R&	909	30	F	INDUCTIVE	R	P	DAL
RER75F931R&	931	30	F	INDUCTIVE	R	P	DAL
RER75F953R&	953	30	F	INDUCTIVE	R	P	DAL
RER75F976R&	976	30	F	INDUCTIVE	R	P	DAL
RER75F1001&	1,000	30	F	INDUCTIVE	R	P	DAL
RER75F1021&	1,020	30	F	INDUCTIVE	R	P	DAL
RER75F1051&	1,050	30	F	INDUCTIVE	R	P	DAL
RER75F1071&	1,070	30	F	INDUCTIVE	R	P	DAL
RER75F1101&	1,100	30	F	INDUCTIVE	R	P	DAL
RER75F1131&	1,130	30	F	INDUCTIVE	R	P	DAL
RER75F1151&	1,150	30	F	INDUCTIVE	R	P	DAL
RER75F1181&	1,180	30	F	INDUCTIVE	R	P	DAL
RER75F1211&	1,210	30	F	INDUCTIVE	R	P	DAL
RER75F1241&	1,240	30	F	INDUCTIVE	R	P	DAL
RER75F1271&	1,270	30	F	INDUCTIVE	R	P	DAL
RER75F1301&	1,300	30	F	INDUCTIVE	R	P	DAL
RER75F1331&	1,330	30	F	INDUCTIVE	R	P	DAL
RER75F1371&	1,370	30	F	INDUCTIVE	R	P	DAL
RER75F1401&	1,400	30	F	INDUCTIVE	R	P	DAL
RER75F1431&	1,430	30	F	INDUCTIVE	R	P	DAL
RER75F1471&	1,470	30	F	INDUCTIVE	R	P	DAL
RER75F1501&	1,500	30	F	INDUCTIVE	R	P	DAL
RER75F1541&	1,540	30	F	INDUCTIVE	R	P	DAL
RER75F1581&	1,580	30	F	INDUCTIVE	R	P	DAL
RER75F1621&	1,620	30	F	INDUCTIVE	R	P	DAL
RER75F1651&	1,650	30	F	INDUCTIVE	R	P	DAL
RER75F1691&	1,690	30	F	INDUCTIVE	R	P	DAL
RER75F1741&	1,740	30	F	INDUCTIVE	R	P	DAL
RER75F1781&	1,780	30	F	INDUCTIVE	R	P	DAL
RER75F1821&	1,820	30	F	INDUCTIVE	R	P	DAL
RER75F1871&	1,870	30	F	INDUCTIVE	R	P	DAL
RER75F1911&	1,910	30	F	INDUCTIVE	R	P	DAL
RER75F1961&	1,960	30	F	INDUCTIVE	R	P	DAL
RER75F2001&	2,000	30	F	INDUCTIVE	R	P	DAL

RER75F2051&	2,050	30	F	INDUCTIVE	R	P	DAL
RER75F2101&	2,100	30	F	INDUCTIVE	R	P	DAL
RER75F2151&	2,150	30	F	INDUCTIVE	R	P	DAL
RER75F2211&	2,210	30	F	INDUCTIVE	R	P	DAL
RER75F2261&	2,260	30	F	INDUCTIVE	R	P	DAL
RER75F2321&	2,320	30	F	INDUCTIVE	R	P	DAL
RER75F2371&	2,370	30	F	INDUCTIVE	R	P	DAL
RER75F2431&	2,430	30	F	INDUCTIVE	R	P	DAL
RER75F2491&	2,490	30	F	INDUCTIVE	R	P	DAL
RER75F2551&	2,550	30	F	INDUCTIVE	R	P	DAL
RER75F2611&	2,610	30	F	INDUCTIVE	R	P	DAL
RER75F2671&	2,670	30	F	INDUCTIVE	R	P	DAL
RER75F2741&	2,740	30	F	INDUCTIVE	R	P	DAL
RER75F2801&	2,800	30	F	INDUCTIVE	R	P	DAL
RER75F2871&	2,870	30	F	INDUCTIVE	R	P	DAL
RER75F2941&	2,940	30	F	INDUCTIVE	R	P	DAL
RER75F3011&	3,010	30	F	INDUCTIVE	R	P	DAL
RER75F3091&	3,090	30	F	INDUCTIVE	R	P	DAL
RER75F3161&	3,160	30	F	INDUCTIVE	R	P	DAL
RER75F3241&	3,240	30	F	INDUCTIVE	R	P	DAL
RER75F3321&	3,320	30	F	INDUCTIVE	R	P	DAL
RER75F3401&	3,400	30	F	INDUCTIVE	R	P	DAL
RER75F3481&	3,480	30	F	INDUCTIVE	R	P	DAL
RER75F3571&	3,570	30	F	INDUCTIVE	R	P	DAL
RER75F3651&	3,650	30	F	INDUCTIVE	R	P	DAL
RER75F3741&	3,740	30	F	INDUCTIVE	R	P	DAL
RER75F3831&	3,830	30	F	INDUCTIVE	R	P	DAL
RER75F3921&	3,920	30	F	INDUCTIVE	R	P	DAL
RER75F4021&	4,020	30	F	INDUCTIVE	R	P	DAL
RER75F4121&	4,120	30	F	INDUCTIVE	R	P	DAL
RER75F4221&	4,220	30	F	INDUCTIVE	R	P	DAL
RER75F4321&	4,320	30	F	INDUCTIVE	R	P	DAL
RER75F4421&	4,420	30	F	INDUCTIVE	R	P	DAL
RER75F4531&	4,530	30	F	INDUCTIVE	R	P	DAL
RER75F4641&	4,640	30	F	INDUCTIVE	R	P	DAL
RER75F4751&	4,750	30	F	INDUCTIVE	R	P	DAL
RER75F4871&	4,870	30	F	INDUCTIVE	R	P	DAL
RER75F4991&	4,990	30	F	INDUCTIVE	R	P	DAL
RER75F5111&	5,110	30	F	INDUCTIVE	R	P	DAL
RER75F5231&	5,230	30	F	INDUCTIVE	R	P	DAL
RER75F5361&	5,360	30	F	INDUCTIVE	R	P	DAL
RER75F5491&	5,490	30	F	INDUCTIVE	R	P	DAL
RER75F5621&	5,620	30	F	INDUCTIVE	R	P	DAL
RER75F5761&	5,760	30	F	INDUCTIVE	R	P	DAL
RER75F5901&	5,900	30	F	INDUCTIVE	R	P	DAL
RER75F6041&	6,040	30	F	INDUCTIVE	R	P	DAL
RER75F6191&	6,190	30	F	INDUCTIVE	R	P	DAL

RER75F6341&	6,340	30	F	INDUCTIVE	R	P	DAL
RER75F6491&	6,490	30	F	INDUCTIVE	R	P	DAL
RER75F6651&	6,650	30	F	INDUCTIVE	R	P	DAL
RER75F6811&	6,810	30	F	INDUCTIVE	R	P	DAL
RER75F6981&	6,980	30	F	INDUCTIVE	R	P	DAL
RER75F7151&	7,150	30	F	INDUCTIVE	R	P	DAL
RER75F7321&	7,320	30	F	INDUCTIVE	R	P	DAL
RER75F7501&	7,500	30	F	INDUCTIVE	R	P	DAL
RER75F7681&	7,680	30	F	INDUCTIVE	R	P	DAL
RER75F7871&	7,870	30	F	INDUCTIVE	R	P	DAL
RER75F8061&	8,060	30	F	INDUCTIVE	R	P	DAL
RER75F8251&	8,250	30	F	INDUCTIVE	R	P	DAL
RER75F8451&	8,450	30	F	INDUCTIVE	R	P	DAL
RER75F8661&	8,660	30	F	INDUCTIVE	R	P	DAL
RER75F8871&	8,870	30	F	INDUCTIVE	R	P	DAL
RER75F9091&	9,090	30	F	INDUCTIVE	R	P	DAL
RER75F9311&	9,310	30	F	INDUCTIVE	R	P	DAL
RER75F9531&	9,530	30	F	INDUCTIVE	R	P	DAL
RER75F9761&	9,760	30	F	INDUCTIVE	R	P	DAL
RER75F1002&	10,000	30	F	INDUCTIVE	R	P	DAL
RER75F1022&	10,200	30	F	INDUCTIVE	R	P	DAL
RER75F1052&	10,500	30	F	INDUCTIVE	R	P	DAL
RER75F1072&	10,700	30	F	INDUCTIVE	R	P	DAL
RER75F1102&	11,000	30	F	INDUCTIVE	R	P	DAL
RER75F1132&	11,300	30	F	INDUCTIVE	R	P	DAL
RER75F1152&	11,500	30	F	INDUCTIVE	R	P	DAL
RER75F1182&	11,800	30	F	INDUCTIVE	R	P	DAL
RER75F1212&	12,100	30	F	INDUCTIVE	R	P	DAL
RER75F1242&	12,400	30	F	INDUCTIVE	R	P	DAL
RER75F1272&	12,700	30	F	INDUCTIVE	R	P	DAL
RER75F1302&	13,000	30	F	INDUCTIVE	R	P	DAL
RER75F1332&	13,300	30	F	INDUCTIVE	R	P	DAL
RER75F1372&	13,700	30	F	INDUCTIVE	R	P	DAL
RER75F1402&	14,000	30	F	INDUCTIVE	R	P	DAL
RER75F1432&	14,300	30	F	INDUCTIVE	R	P	DAL
RER75F1472&	14,700	30	F	INDUCTIVE	R	P	DAL
RER75F1502&	15,000	30	F	INDUCTIVE	R	P	DAL
RER75F1542&	15,400	30	F	INDUCTIVE	R	P	DAL
RER75F1582&	15,800	30	F	INDUCTIVE	R	P	DAL
RER75F1622&	16,200	30	F	INDUCTIVE	R	P	DAL
RER75F1652&	16,500	30	F	INDUCTIVE	R	P	DAL
RER75F1692&	16,900	30	F	INDUCTIVE	R	P	DAL
RER75F1742&	17,400	30	F	INDUCTIVE	R	P	DAL
RER75F1782&	17,800	30	F	INDUCTIVE	R	P	DAL
RER75F1822&	18,200	30	F	INDUCTIVE	R	P	DAL
RER75F1872&	18,700	30	F	INDUCTIVE	R	P	DAL
RER75F1912&	19,100	30	F	INDUCTIVE	R	P	DAL

RER75F1962&	19,600	30	F	INDUCTIVE	R	P	DAL
RER75F2002&	20,000	30	F	INDUCTIVE	R	P	DAL
RER75F2052&	20,500	30	F	INDUCTIVE	R	P	DAL
RER75F2102&	21,000	30	F	INDUCTIVE	R	P	DAL
RER75F2152&	21,500	30	F	INDUCTIVE	R	P	DAL
RER75F2212&	22,100	30	F	INDUCTIVE	R	P	DAL
RER75F2262&	22,600	30	F	INDUCTIVE	R	P	DAL
RER75F2322&	23,200	30	F	INDUCTIVE	R	P	DAL
RER75F2372&	23,700	30	F	INDUCTIVE	R	P	DAL
RER75F2432&	24,300	30	F	INDUCTIVE	R	P	DAL
RER75F2492&	24,900	30	F	INDUCTIVE	R	P	DAL
RER75F2552&	25,500	30	F	INDUCTIVE	R	P	DAL
RER75F2612&	26,100	30	F	INDUCTIVE	R	P	DAL
RER75F2672&	26,700	30	F	INDUCTIVE	R	P	DAL
RER75F2742&	27,400	30	F	INDUCTIVE	R	P	DAL
RER75F2802&	28,000	30	F	INDUCTIVE	R	P	DAL
RER75F2872&	28,700	30	F	INDUCTIVE	R	P	DAL
RER75F2942&	29,400	30	F	INDUCTIVE	R	P	DAL
RER75F3012&	30,100	30	F	INDUCTIVE	R	P	DAL
RER75F3092&	30,900	30	F	INDUCTIVE	R	P	DAL
RER75F3162&	31,600	30	F	INDUCTIVE	R	P	DAL
RER75F3242&	32,400	30	F	INDUCTIVE	R	P	DAL
RER75F3322&	33,200	30	F	INDUCTIVE	R	P	DAL
RER75F3402&	34,000	30	F	INDUCTIVE	R	P	DAL
RER75F3482&	34,800	30	F	INDUCTIVE	R	P	DAL
RER75F3572&	35,700	30	F	INDUCTIVE	R	P	DAL
RER75F3652&	36,500	30	F	INDUCTIVE	R	P	DAL
RER75F3742&	37,400	30	F	INDUCTIVE	R	P	DAL
RER75F3832&	38,300	30	F	INDUCTIVE	R	P	DAL
RER75F3922&	39,200	30	F	INDUCTIVE	R	P	DAL

RER75 RESISTORS DECADE BREAKDOWN

Click on the link below to see the associated parts selection listing:

Resistance Range
0.100 Ohms through 0.976 Ohms
1.00 Ohms through 9.76 Ohms
10.0 Ohms through 97.6 Ohms
100 Ohms through 976 Ohms
1000 Ohms through 9760 Ohms
10000 Ohms through 39200 Ohms

RER75 Wirewound Resistors: 0.100 Ohms through 0.976 Ohms

	Resistance	Power	Resistance		Level 1	Level 2	
Part Number	Value (Ohms)	Rating (W)	Tolerance	Winding	(FRL)(&)	(FRL)(&)	Manufacturer
RER75FR100&	0.100	30	F	INDUCTIVE	R	P	DAL
RER75FR102&	0.102	30	F	INDUCTIVE	R	P	DAL
RER75FR105&	0.105	30	F	INDUCTIVE	R	P	DAL
RER75FR107&	0.107	30	F	INDUCTIVE	R	P	DAL
RER75FR110&	0.110	30	F	INDUCTIVE	R	P	DAL
RER75FR113&	0.113	30	F	INDUCTIVE	R	P	DAL
RER75FR115&	0.115	30	F	INDUCTIVE	R	P	DAL
RER75FR118&	0.118	30	F	INDUCTIVE	R	P	DAL
RER75FR121&	0.121	30	F	INDUCTIVE	R	P	DAL
RER75FR124&	0.124	30	F	INDUCTIVE	R	P	DAL
RER75FR127&	0.127	30	F	INDUCTIVE	R	P	DAL
RER75FR130&	0.130	30	F	INDUCTIVE	R	P	DAL
RER75FR133&	0.133	30	F	INDUCTIVE	R	P	DAL
	Resistance	Power	Resistance		Level 1	Level 2	
Part Number	Value (Ohms)	Rating (W)	Tolerance	Winding	(FRL)(&)	(FRL)(&)	Manufacturer
RER75FR137&	0.137	30	F	INDUCTIVE	R	P	DAL
RER75FR140&	0.140	30	F	INDUCTIVE	R	P	DAL
RER75FR143&	0.143	30	F	INDUCTIVE	R	P	DAL
RER75FR147&	0.147	30	F	INDUCTIVE	R	P	DAL
RER75FR150&	0.150	30	F	INDUCTIVE	R	P	DAL
RER75FR154&	0.154	30	F	INDUCTIVE	R	P	DAL
RER75FR158&	0.158	30	F	INDUCTIVE	R	P	DAL
RER75FR162&	0.162	30	F	INDUCTIVE	R	P	DAL
RER75FR165&	0.165	30	F	INDUCTIVE	R	P	DAL
RER75FR169&	0.169	30	F	INDUCTIVE	R	P	DAL
RER75FR174&	0.174	30	F	INDUCTIVE	R	P	DAL
RER75FR178&	0.178	30	F	INDUCTIVE	R	P	DAL
RER75FR182&	0.182	30	F	INDUCTIVE	R	P	DAL
RER75FR187&	0.187	30	F	INDUCTIVE	R	P	DAL
	Resistance	Power	Resistance		Level 1	Level 2	
Part Number	Value (Ohms)	Rating (W)	Tolerance	Winding	(FRL)(&)	(FRL)(&)	Manufacturer
RER75FR191&	0.191	30	F	INDUCTIVE	R	P	DAL
RER75FR196&	0.196	30	F	INDUCTIVE	R	P	DAL
RER75FR200&	0.200	30	F	INDUCTIVE	R	P	DAL
RER75FR205&	0.205	30	F	INDUCTIVE	R	P	DAL
RER75FR210&	0.210	30	F	INDUCTIVE	R	P	DAL
RER75FR215&	0.215	30	F	INDUCTIVE	R	P	DAL
RER75FR221&	0.221	30	F	INDUCTIVE	R	P	DAL
RER75FR226&	0.226	30	F	INDUCTIVE	R	P	DAL
RER75FR232&	0.232	30	F	INDUCTIVE	R	P	DAL
RER75FR237&	0.237	30	F	INDUCTIVE	R	P	DAL
RER75FR243&	0.243	30	F	INDUCTIVE	R	P	DAL
RER75FR249&	0.249	30	F	INDUCTIVE	R	P	DAL
RER75FR255&	0.255	30	F	INDUCTIVE	R	P	DAL
RER75FR261&	0.261	30	F	INDUCTIVE	R	P	DAL

	Resistance	Power	Resistance		Level 1	Level 2	
Part Number	Value (Ohms)	Rating (W)	Tolerance	Winding	(FRL)(&)	(FRL)(&)	Manufacturer
RER75FR267&	0.267	30	F	INDUCTIVE	R	P	DAL
RER75FR274&	0.274	30	F	INDUCTIVE	R	P	DAL
RER75FR280&	0.280	30	F	INDUCTIVE	R	P	DAL
RER75FR287&	0.287	30	F	INDUCTIVE	R	P	DAL
RER75FR294&	0.294	30	F	INDUCTIVE	R	P	DAL
RER75FR301&	0.301	30	F	INDUCTIVE	R	P	DAL
RER75FR309&	0.309	30	F	INDUCTIVE	R	P	DAL
RER75FR316&	0.316	30	F	INDUCTIVE	R	P	DAL
RER75FR324&	0.324	30	F	INDUCTIVE	R	P	DAL
RER75FR332&	0.332	30	F	INDUCTIVE	R	P	DAL
RER75FR340&	0.340	30	F	INDUCTIVE	R	P	DAL
RER75FR348&	0.348	30	F	INDUCTIVE	R	P	DAL
RER75FR357&	0.357	30	F	INDUCTIVE	R	P	DAL
RER75FR365&	0.365	30	F	INDUCTIVE	R	P	DAL
	Resistance	Power	Resistance		Level 1	Level 2	
Part Number	Value (Ohms)	Rating (W)	Tolerance	Winding	(FRL)(&)	(FRL)(&)	Manufacturer
RER75FR374&	0.374	30	F	INDUCTIVE	R	P	DAL
RER75FR383&	0.383	30	F	INDUCTIVE	R	P	DAL
RER75FR392&	0.392	30	F	INDUCTIVE	R	P	DAL
RER75FR402&	0.402	30	F	INDUCTIVE	R	P	DAL
RER75FR412&	0.412	30	F	INDUCTIVE	R	P	DAL
RER75FR422&	0.422	30	F	INDUCTIVE	R	P	DAL
RER75FR432&	0.432	30	F	INDUCTIVE	R	P	DAL
RER75FR442&	0.442	30	F	INDUCTIVE	R	P	DAL
RER75FR453&	0.453	30	F	INDUCTIVE	R	P	DAL
RER75FR464&	0.464	30	F	INDUCTIVE	R	P	DAL
RER75FR475&	0.475	30	F	INDUCTIVE	R	P	DAL
RER75FR487&	0.487	30	F	INDUCTIVE	R	P	DAL
RER75FR499&	0.499	30	F	INDUCTIVE	R	P	DAL
RER75FR511&	0.511	30	F	INDUCTIVE	R	P	DAL
	Resistance	Power	Resistance		Level 1	Level 2	
Part Number	Value (Ohms)	Rating (W)	Tolerance	Winding	(FRL)(&)	(FRL)(&)	Manufacturer
RER75FR523&	0.523	30	F	INDUCTIVE	R	P	DAL
RER75FR536&	0.536	30	F	INDUCTIVE	R	P	DAL
RER75FR549&	0.549	30	F	INDUCTIVE	R	P	DAL
RER75FR562&	0.562	30	F	INDUCTIVE	R	P	DAL
RER75FR576&	0.576	30	F	INDUCTIVE	R	P	DAL
RER75FR590&	0.590	30	F	INDUCTIVE	R	P	DAL
RER75FR604&	0.604	30	F	INDUCTIVE	R	P	DAL
RER75FR619&	0.619	30	F	INDUCTIVE	R	P	DAL
RER75FR634&	0.634	30	F	INDUCTIVE	R	P	DAL
RER75FR649&	0.649	30	F	INDUCTIVE	R	P	DAL
RER75FR665&	0.665	30	F	INDUCTIVE	R	P	DAL
RER75FR681&	0.681	30	F	INDUCTIVE	R	P	DAL
RER75FR698&	0.698	30	F	INDUCTIVE	R	P	DAL

	Resistance	Power	Resistance		Level 1	Level 2	
Part Number	Value (Ohms)	Rating (W)	Tolerance	Winding	(FRL)(&)	(FRL)(&)	Manufacturer
RER75FR715&	0.715	30	F	INDUCTIVE	R	P	DAL
RER75FR732&	0.732	30	F	INDUCTIVE	R	P	DAL
RER75FR750&	0.750	30	F	INDUCTIVE	R	P	DAL
RER75FR768&	0.768	30	F	INDUCTIVE	R	P	DAL
RER75FR787&	0.787	30	F	INDUCTIVE	R	P	DAL
RER75FR806&	0.806	30	F	INDUCTIVE	R	P	DAL
RER75FR825&	0.825	30	F	INDUCTIVE	R	P	DAL
RER75FR845&	0.845	30	F	INDUCTIVE	R	P	DAL
	Resistance	Power	Resistance		Level 1	Level 2	
Part Number	Value (Ohms)	Rating (W)	Tolerance	Winding	(FRL)(&)	(FRL)(&)	Manufacturer
RER75FR866&	0.866	30	F	INDUCTIVE	R	P	DAL
RER75FR887&	0.887	30	F	INDUCTIVE	R	P	DAL
RER75FR909&	0.909	30	F	INDUCTIVE	R	P	DAL
RER75FR931&	0.930	30	F	INDUCTIVE	R	P	DAL
RER75FR953&	0.953	30	F	INDUCTIVE	R	P	DAL
RER75FR976&	0.976	30	F	INDUCTIVE	R	P	DAL
	Resistance	Power	Resistance		Level 1	Level 2	
Part Number	Value (Ohms)	Rating (W)	Tolerance	Winding	(FRL)(&)	(FRL)(&)	Manufacturer

RER75 Wirewound Resistors: 1.00 Ohms through 9.76 Ohms

	Resistance	Power	Resistance		Level 1	Level 2	
Part Number	Value (Ohms)	Rating (W)	Tolerance	Winding	(FRL)(&)	(FRL)(&)	Manufacturer
RER75F1R00&	1.00	30	F	INDUCTIVE	R	P	DAL
RER75F1R02&	1.02	30	F	INDUCTIVE	R	P	DAL
RER75F1R05&	1.05	30	F	INDUCTIVE	R	P	DAL
RER75F1R07&	1.07	30	F	INDUCTIVE	R	P	DAL
RER75F1R10&	1.10	30	F	INDUCTIVE	R	P	DAL
RER75F1R13&	1.13	30	F	INDUCTIVE	R	P	DAL
RER75F1R15&	1.15	30	F	INDUCTIVE	R	P	DAL
RER75F1R18&	1.18	30	F	INDUCTIVE	R	P	DAL
RER75F1R21&	1.21	30	F	INDUCTIVE	R	P	DAL
RER75F1R24&	1.24	30	F	INDUCTIVE	R	P	DAL
RER75F1R27&	1.27	30	F	INDUCTIVE	R	P	DAL
RER75F1R30&	1.30	30	F	INDUCTIVE	R	P	DAL
RER75F1R33&	1.33	30	F	INDUCTIVE	R	P	DAL
	Resistance	Power	Resistance		Level 1	Level 2	
Part Number	Value (Ohms)	Rating (W)	Tolerance	Winding	(FRL)(&)	(FRL)(&)	Manufacturer
RER75F1R37&	1.37	30	F	INDUCTIVE	R	P	DAL
RER75F1R40&	1.40	30	F	INDUCTIVE	R	P	DAL
RER75F1R43&	1.43	30	F	INDUCTIVE	R	P	DAL
RER75F1R47&	1.47	30	F	INDUCTIVE	R	P	DAL
RER75F1R50&	1.50	30	F	INDUCTIVE	R	P	DAL

RER75F1R54&	1.54	30	F	INDUCTIVE	R	P	DAL
RER75F1R58&	1.58	30	F	INDUCTIVE	R	P	DAL
RER75F1R62&	1.62	30	F	INDUCTIVE	R	P	DAL
RER75F1R65&	1.65	30	F	INDUCTIVE	R	P	DAL
RER75F1R69&	1.69	30	F	INDUCTIVE	R	P	DAL
RER75F1R74&	1.74	30	F	INDUCTIVE	R	P	DAL
RER75F1R78&	1.78	30	F	INDUCTIVE	R	P	DAL
RER75F1R82&	1.82	30	F	INDUCTIVE	R	P	DAL
RER75F1R87&	1.87	30	F	INDUCTIVE	R	P	DAL
	Resistance	Power	Resistance		Level 1	Level 2	
Part Number	Value (Ohms)	Rating (W)	Tolerance	Winding	(FRL)(&)	(FRL)(&)	Manufacturer
RER75F1R91&	1.91	30	F	INDUCTIVE	R	P	DAL
RER75F1R96&	1.96	30	F	INDUCTIVE	R	P	DAL
RER75F2R00&	2.00	30	F	INDUCTIVE	R	P	DAL
RER75F2R05&	2.05	30	F	INDUCTIVE	R	P	DAL
RER75F2R10&	2.10	30	F	INDUCTIVE	R	P	DAL
RER75F2R15&	2.15	30	F	INDUCTIVE	R	P	DAL
RER75F2R21&	2.21	30	F	INDUCTIVE	R	P	DAL
RER75F2R26&	2.26	30	F	INDUCTIVE	R	P	DAL
RER75F2R32&	2.32	30	F	INDUCTIVE	R	P	DAL
RER75F2R37&	2.37	30	F	INDUCTIVE	R	P	DAL
RER75F2R43&	2.43	30	F	INDUCTIVE	R	P	DAL
RER75F2R49&	2.49	30	F	INDUCTIVE	R	P	DAL
RER75F2R55&	2.55	30	F	INDUCTIVE	R	P	DAL
RER75F2R61&	2.61	30	F	INDUCTIVE	R	P	DAL
	Resistance	Power	Resistance		Level 1	Level 2	
Part Number	Value (Ohms)	Rating (W)	Tolerance	Winding	(FRL)(&)	(FRL)(&)	Manufacturer
RER75F2R67&	2.67	30	F	INDUCTIVE	R	P	DAL
RER75F2R74&	2.74	30	F	INDUCTIVE	R	P	DAL
RER75F2R80&	2.80	30	F	INDUCTIVE	R	P	DAL
RER75F2R87&	2.87	30	F	INDUCTIVE	R	P	DAL
RER75F2R94&	2.94	30	F	INDUCTIVE	R	P	DAL
RER75F3R01&	3.01	30	F	INDUCTIVE	R	P	DAL
RER75F3R09&	3.09	30	F	INDUCTIVE	R	P	DAL
RER75F3R16&	3.16	30	F	INDUCTIVE	R	P	DAL
RER75F3R24&	3.24	30	F	INDUCTIVE	R	P	DAL
RER75F3R32&	3.32	30	F	INDUCTIVE	R	P	DAL
RER75F3R40&	3.40	30	F	INDUCTIVE	R	P	DAL
RER75F3R48&	3.48	30	F	INDUCTIVE	R	P	DAL
RER75F3R57&	3.57	30	F	INDUCTIVE	R	P	DAL
RER75F3R65&	3.65	30	F	INDUCTIVE	R	P	DAL
	Resistance	Power	Resistance		Level 1	Level 2	
Part Number	Value (Ohms)	Rating (W)	Tolerance	Winding	(FRL)(&)	(FRL)(&)	Manufacturer
RER75F3R74&	3.74	30	F	INDUCTIVE	R	P	DAL
RER75F3R83&	3.83	30	F	INDUCTIVE	R	P	DAL
RER75F3R92&	3.92	30	F	INDUCTIVE	R	P	DAL
RER75F4R02&	4.02	30	F	INDUCTIVE	R	P	DAL

RER75F4R12&	4.12	30	F	INDUCTIVE	R	P	DAL
RER75F4R22&	4.22	30	F	INDUCTIVE	R	P	DAL
RER75F4R32&	4.32	30	F	INDUCTIVE	R	P	DAL
RER75F4R42&	4.42	30	F	INDUCTIVE	R	P	DAL
RER75F4R53&	4.53	30	F	INDUCTIVE	R	P	DAL
RER75F4R64&	4.64	30	F	INDUCTIVE	R	P	DAL
RER75F4R75&	4.75	30	F	INDUCTIVE	R	P	DAL
RER75F4R87&	4.87	30	F	INDUCTIVE	R	P	DAL
RER75F4R99&	4.99	30	F	INDUCTIVE	R	P	DAL
RER75F5R11&	5.11	30	F	INDUCTIVE	R	P	DAL
	Resistance	Power	Resistance		Level 1	Level 2	
Part Number	Value (Ohms)	Rating (W)	Tolerance	Winding	(FRL)(&)	(FRL)(&)	Manufacturer
RER75F5R23&	5.23	30	F	INDUCTIVE	R	P	DAL
RER75F5R36&	5.36	30	F	INDUCTIVE	R	P	DAL
RER75F5R49&	5.49	30	F	INDUCTIVE	R	P	DAL
RER75F5R62&	5.62	30	F	INDUCTIVE	R	P	DAL
RER75F5R76&	5.76	30	F	INDUCTIVE	R	P	DAL
RER75F5R90&	5.90	30	F	INDUCTIVE	R	P	DAL
RER75F6R04&	6.04	30	F	INDUCTIVE	R	P	DAL
RER75F6R19&	6.19	30	F	INDUCTIVE	R	P	DAL
RER75F6R34&	6.34	30	F	INDUCTIVE	R	P	DAL
RER75F6R49&	6.49	30	F	INDUCTIVE	R	P	DAL
RER75F6R65&	6.65	30	F	INDUCTIVE	R	P	DAL
RER75F6R81&	6.81	30	F	INDUCTIVE	R	P	DAL
RER75F6R98&	6.98	30	F	INDUCTIVE	R	P	DAL
	Resistance	Power	Resistance		Level 1	Level 2	
Part Number	Value (Ohms)	Rating (W)	Tolerance	Winding	(FRL)(&)	(FRL)(&)	Manufacturer
RER75F7R15&	7.15	30	F	INDUCTIVE	R	P	DAL
RER75F7R32&	7.32	30	F	INDUCTIVE	R	P	DAL
RER75F7R50&	7.50	30	F	INDUCTIVE	R	P	DAL
RER75F7R68&	7.68	30	F	INDUCTIVE	R	P	DAL
RER75F7R87&	7.87	30	F	INDUCTIVE	R	P	DAL
RER75F8R06&	8.06	30	F	INDUCTIVE	R	P	DAL
RER75F8R25&	8.25	30	F	INDUCTIVE	R	P	DAL
RER75F8R45&	8.45	30	F	INDUCTIVE	R	P	DAL
RER75F8R66&	8.66	30	F	INDUCTIVE	R	P	DAL
RER75F8R87&	8.87	30	F	INDUCTIVE	R	P	DAL
RER75F9R09&	9.09	30	F	INDUCTIVE	R	P	DAL
RER75F9R31&	9.31	30	F	INDUCTIVE	R	P	DAL
RER75F9R53&	9.53	30	F	INDUCTIVE	R	P	DAL
RER75F9R76&	9.76	30	F	INDUCTIVE	R	P	DAL
	Resistance	Power	Resistance		Level 1	Level 2	
Part Number	Value (Ohms)	Rating (W)	Tolerance	Winding	(FRL)(&)	(FRL)(&)	Manufacturer

RER75 Wirewound Resistors: 10.0 Ohms through 97.6 Ohms

	Resistance	Power	Resistance		Level 1	Level 2	
Part Number	Value (Ohms)	Rating (W)	Tolerance	Winding	(FRL)(&)	(FRL)(&)	Manufacturer
RER75F10R0&	10.00	30	F	INDUCTIVE	R	P	DAL
RER75F10R2&	10.20	30	F	INDUCTIVE	R	P	DAL
RER75F10R5&	10.50	30	F	INDUCTIVE	R	P	DAL
RER75F10R7&	10.70	30	F	INDUCTIVE	R	P	DAL
RER75F11R0&	11.00	30	F	INDUCTIVE	R	P	DAL
RER75F11R3&	11.30	30	F	INDUCTIVE	R	P	DAL
RER75F11R5&	11.50	30	F	INDUCTIVE	R	P	DAL
RER75F11R8&	11.80	30	F	INDUCTIVE	R	P	DAL
RER75F12R1&	12.10	30	F	INDUCTIVE	R	P	DAL
RER75F12R4&	12.40	30	F	INDUCTIVE	R	P	DAL
RER75F12R7&	12.70	30	F	INDUCTIVE	R	P	DAL
RER75F13R0&	13.00	30	F	INDUCTIVE	R	P	DAL
RER75F13R3&	13.30	30	F	INDUCTIVE	R	P	DAL
	Resistance	Power	Resistance		Level 1	Level 2	
Part Number	Value (Ohms)	Rating (W)	Tolerance	Winding	(FRL)(&)	(FRL)(&)	Manufacturer
RER75F13R7&	13.70	30	F	INDUCTIVE	R	P	DAL
RER75F14R0&	14.00	30	F	INDUCTIVE	R	P	DAL
RER75F14R3&	14.30	30	F	INDUCTIVE	R	P	DAL
RER75F14R7&	14.70	30	F	INDUCTIVE	R	P	DAL
RER75F15R0&	15.00	30	F	INDUCTIVE	R	P	DAL
RER75F15R4&	15.40	30	F	INDUCTIVE	R	P	DAL
RER75F15R8&	15.80	30	F	INDUCTIVE	R	P	DAL
RER75F16R2&	16.20	30	F	INDUCTIVE	R	P	DAL
RER75F16R5&	16.50	30	F	INDUCTIVE	R	P	DAL
RER75F16R9&	16.90	30	F	INDUCTIVE	R	P	DAL
RER75F17R4&	17.40	30	F	INDUCTIVE	R	P	DAL
RER75F17R8&	17.80	30	F	INDUCTIVE	R	P	DAL
RER75F18R2&	18.20	30	F	INDUCTIVE	R	P	DAL
RER75F18R7&	18.70	30	F	INDUCTIVE	R	P	DAL
	Resistance	Power	Resistance		Level 1	Level 2	
Part Number	Value (Ohms)	Rating (W)	Tolerance	Winding	(FRL)(&)	(FRL)(&)	Manufacturer
RER75F19R1&	19.10	30	F	INDUCTIVE	R	P	DAL
RER75F19R6&	19.60	30	F	INDUCTIVE	R	P	DAL
RER75F20R0&	20.00	30	F	INDUCTIVE	R	P	DAL
RER75F20R5&	20.50	30	F	INDUCTIVE	R	P	DAL
RER75F21R0&	21.00	30	F	INDUCTIVE	R	P	DAL
RER75F21R5&	21.50	30	F	INDUCTIVE	R	P	DAL
RER75F22R1&	22.10	30	F	INDUCTIVE	R	P	DAL
RER75F22R6&	22.60	30	F	INDUCTIVE	R	P	DAL
RER75F23R2&	23.20	30	F	INDUCTIVE	R	P	DAL
RER75F23R7&	23.70	30	F	INDUCTIVE	R	P	DAL
RER75F24R3&	24.30	30	F	INDUCTIVE	R	P	DAL
RER75F24R9&	24.90	30	F	INDUCTIVE	R	P	DAL

RER75F25R5&	25.50	30	F	INDUCTIVE	R	P	DAL
RER75F26R1&	26.10	30	F	INDUCTIVE	R	P	DAL
	Resistance	Power	Resistance		Level 1	Level 2	
Part Number	Value (Ohms)	Rating (W)	Tolerance	Winding	(FRL)(&)	(FRL)(&)	Manufacturer
RER75F26R7&	26.70	30	F	INDUCTIVE	R	P	DAL
RER75F27R4&	27.40	30	F	INDUCTIVE	R	P	DAL
RER75F28R0&	28.00	30	F	INDUCTIVE	R	P	DAL
RER75F28R7&	28.70	30	F	INDUCTIVE	R	P	DAL
RER75F29R4&	29.40	30	F	INDUCTIVE	R	P	DAL
RER75F30R1&	30.10	30	F	INDUCTIVE	R	P	DAL
RER75F30R9&	30.90	30	F	INDUCTIVE	R	P	DAL
RER75F31R6&	31.60	30	F	INDUCTIVE	R	P	DAL
RER75F32R4&	32.40	30	F	INDUCTIVE	R	P	DAL
RER75F33R2&	33.20	30	F	INDUCTIVE	R	P	DAL
RER75F34R0&	34.00	30	F	INDUCTIVE	R	P	DAL
RER75F34R8&	34.80	30	F	INDUCTIVE	R	P	DAL
RER75F35R7&	35.70	30	F	INDUCTIVE	R	P	DAL
RER75F36R5&	36.50	30	F	INDUCTIVE	R	P	DAL
	Resistance	Power	Resistance		Level 1	Level 2	
Part Number	Value (Ohms)	Rating (W)	Tolerance	Winding	(FRL)(&)	(FRL)(&)	Manufacturer
RER75F37R4&	37.40	30	F	INDUCTIVE	R	P	DAL
RER75F38R3&	38.30	30	F	INDUCTIVE	R	P	DAL
RER75F39R2&	39.20	30	F	INDUCTIVE	R	P	DAL
RER75F40R2&	40.20	30	F	INDUCTIVE	R	P	DAL
RER75F41R2&	41.20	30	F	INDUCTIVE	R	P	DAL
RER75F42R2&	42.20	30	F	INDUCTIVE	R	P	DAL
RER75F43R2&	43.20	30	F	INDUCTIVE	R	P	DAL
RER75F44R2&	44.20	30	F	INDUCTIVE	R	P	DAL
RER75F45R3&	45.30	30	F	INDUCTIVE	R	P	DAL
RER75F46R4&	46.40	30	F	INDUCTIVE	R	P	DAL
RER75F47R5&	47.50	30	F	INDUCTIVE	R	P	DAL
RER75F48R7&	48.70	30	F	INDUCTIVE	R	P	DAL
RER75F49R9&	49.90	30	F	INDUCTIVE	R	P	DAL
RER75F51R1&	51.10	30	F	INDUCTIVE	R	P	DAL
	Resistance	Power	Resistance		Level 1	Level 2	
Part Number	Value (Ohms)	Rating (W)	Tolerance	Winding	(FRL)(&)	(FRL)(&)	Manufacturer
RER75F52R3&	52.30	30	F	INDUCTIVE	R	P	DAL
RER75F53R6&	53.60	30	F	INDUCTIVE	R	P	DAL
RER75F54R9&	54.90	30	F	INDUCTIVE	R	P	DAL
RER75F56R2&	56.20	30	F	INDUCTIVE	R	P	DAL
RER75F57R6&	57.60	30	F	INDUCTIVE	R	P	DAL
RER75F59R0&	59.00	30	F	INDUCTIVE	R	P	DAL
RER75F60R4&	60.40	30	F	INDUCTIVE	R	P	DAL
RER75F61R9&	61.90	30	F	INDUCTIVE	R	P	DAL
RER75F63R4&	63.40	30	F	INDUCTIVE	R	P	DAL
RER75F64R9&	64.90	30	F	INDUCTIVE	R	P	DAL
RER75F66R5&	66.50	30	F	INDUCTIVE	R	P	DAL

RER75F68R1&	68.10	30	F	INDUCTIVE	R	P	DAL
RER75F69R8&	69.80	30	F	INDUCTIVE	R	P	DAL
	Resistance	Power	Resistance		Level 1	Level 2	
Part Number	Value (Ohms)	Rating (W)	Tolerance	Winding	(FRL)(&)	(FRL)(&)	Manufacturer
RER75F71R5&	71.50	30	F	INDUCTIVE	R	P	DAL
RER75F73R2&	73.20	30	F	INDUCTIVE	R	P	DAL
RER75F75R0&	75.00	30	F	INDUCTIVE	R	P	DAL
RER75F76R8&	76.8	30	F	INDUCTIVE	R	P	DAL
RER75F78R7&	78.7	30	F	INDUCTIVE	R	P	DAL
RER75F80R6&	80.6	30	F	INDUCTIVE	R	P	DAL
RER75F82R5&	82.5	30	F	INDUCTIVE	R	P	DAL
RER75F84R5&	84.5	30	F	INDUCTIVE	R	P	DAL
RER75F86R6&	86.6	30	F	INDUCTIVE	R	P	DAL
RER75F88R7&	88.7	30	F	INDUCTIVE	R	P	DAL
RER75F90R9&	90.9	30	F	INDUCTIVE	R	P	DAL
RER75F93R1&	93.1	30	F	INDUCTIVE	R	P	DAL
RER75F95R3&	95.3	30	F	INDUCTIVE	R	P	DAL
RER75F97R6&	97.6	30	F	INDUCTIVE	R	P	DAL
	Resistance	Power	Resistance		Level 1	Level 2	
Part Number	Value (Ohms)	Rating (W)	Tolerance	Winding	(FRL)(&)	(FRL)(&)	Manufacturer

RER75 Wirewound Resistors: 100 Ohms through 976 Ohms

	Resistance	Power	Resistance		Level 1	Level 2	
Part Number	Value (Ohms)	Rating (W)	Tolerance	Winding	(FRL)(&)	(FRL)(&)	Manufacturer
RER75F100R&	100	30	F	INDUCTIVE	R	P	DAL
RER75F102R&	102	30	F	INDUCTIVE	R	P	DAL
RER75F105R&	105	30	F	INDUCTIVE	R	P	DAL
RER75F107R&	107	30	F	INDUCTIVE	R	P	DAL
RER75F110R&	110	30	F	INDUCTIVE	R	P	DAL
RER75F113R&	113	30	F	INDUCTIVE	R	P	DAL
RER75F115R&	115	30	F	INDUCTIVE	R	P	DAL
RER75F118R&	118	30	F	INDUCTIVE	R	P	DAL
RER75F121R&	121	30	F	INDUCTIVE	R	P	DAL
RER75F124R&	124	30	F	INDUCTIVE	R	P	DAL
RER75F127R&	127	30	F	INDUCTIVE	R	P	DAL
RER75F130R&	130	30	F	INDUCTIVE	R	P	DAL
RER75F133R&	133	30	F	INDUCTIVE	R	P	DAL
	Resistance	Power	Resistance		Level 1	Level 2	
Part Number	Value (Ohms)	Rating (W)	Tolerance	Winding	(FRL)(&)	(FRL)(&)	Manufacturer
RER75F137R&	137	30	F	INDUCTIVE	R	P	DAL
RER75F140R&	140	30	F	INDUCTIVE	R	P	DAL
RER75F143R&	143	30	F	INDUCTIVE	R	P	DAL
RER75F147R&	147	30	F	INDUCTIVE	R	P	DAL
RER75F150R&	150	30	F	INDUCTIVE	R	P	DAL

RER75F154R&	154	30	F	INDUCTIVE	R	P	DAL
RER75F158R&	158	30	F	INDUCTIVE	R	P	DAL
RER75F162R&	162	30	F	INDUCTIVE	R	P	DAL
RER75F165R&	165	30	F	INDUCTIVE	R	P	DAL
RER75F169R&	169	30	F	INDUCTIVE	R	P	DAL
RER75F174R&	174	30	F	INDUCTIVE	R	P	DAL
RER75F178R&	178	30	F	INDUCTIVE	R	P	DAL
RER75F182R&	182	30	F	INDUCTIVE	R	P	DAL
RER75F187R&	187	30	F	INDUCTIVE	R	P	DAL
	Resistance	Power	Resistance		Level 1	Level 2	
Part Number	Value (Ohms)	Rating (W)	Tolerance	Winding	(FRL)(&)	(FRL)(&)	Manufacturer
RER75F191R&	191	30	F	INDUCTIVE	R	P	DAL
RER75F196R&	196	30	F	INDUCTIVE	R	P	DAL
RER75F200R&	200	30	F	INDUCTIVE	R	P	DAL
RER75F205R&	205	30	F	INDUCTIVE	R	P	DAL
RER75F210R&	210	30	F	INDUCTIVE	R	P	DAL
RER75F215R&	215	30	F	INDUCTIVE	R	P	DAL
RER75F221R&	221	30	F	INDUCTIVE	R	P	DAL
RER75F226R&	226	30	F	INDUCTIVE	R	P	DAL
RER75F232R&	232	30	F	INDUCTIVE	R	P	DAL
RER75F237R&	237	30	F	INDUCTIVE	R	P	DAL
RER75F243R&	243	30	F	INDUCTIVE	R	P	DAL
RER75F249R&	249	30	F	INDUCTIVE	R	P	DAL
RER75F255R&	255	30	F	INDUCTIVE	R	P	DAL
RER75F261R&	261	30	F	INDUCTIVE	R	P	DAL
	Resistance	Power	Resistance		Level 1	Level 2	
Part Number	Value (Ohms)	Rating (W)	Tolerance	Winding	(FRL)(&)	(FRL)(&)	Manufacturer
RER75F267R&	267	30	F	INDUCTIVE	R	P	DAL
RER75F274R&	274	30	F	INDUCTIVE	R	P	DAL
RER75F280R&	280	30	F	INDUCTIVE	R	P	DAL
RER75F287R&	287	30	F	INDUCTIVE	R	P	DAL
RER75F294R&	294	30	F	INDUCTIVE	R	P	DAL
RER75F301R&	301	30	F	INDUCTIVE	R	P	DAL
RER75F309R&	309	30	F	INDUCTIVE	R	P	DAL
RER75F316R&	316	30	F	INDUCTIVE	R	P	DAL
RER75F324R&	324	30	F	INDUCTIVE	R	P	DAL
RER75F332R&	332	30	F	INDUCTIVE	R	P	DAL
RER75F340R&	340	30	F	INDUCTIVE	R	P	DAL
RER75F348R&	348	30	F	INDUCTIVE	R	P	DAL
RER75F357R&	357	30	F	INDUCTIVE	R	P	DAL
RER75F365R&	365	30	F	INDUCTIVE	R	P	DAL
	Resistance	Power	Resistance		Level 1	Level 2	
Part Number	Value (Ohms)	Rating (W)	Tolerance	Winding	(FRL)(&)	(FRL)(&)	Manufacturer
RER75F374R&	374	30	F	INDUCTIVE	R	P	DAL
RER75F383R&	383	30	F	INDUCTIVE	R	P	DAL
RER75F392R&	392	30	F	INDUCTIVE	R	P	DAL
RER75F402R&	402	30	F	INDUCTIVE	R	P	DAL

RER75F412R&	412	30	F	INDUCTIVE	R	P	DAL
RER75F422R&	422	30	F	INDUCTIVE	R	P	DAL
RER75F432R&	432	30	F	INDUCTIVE	R	P	DAL
RER75F442R&	442	30	F	INDUCTIVE	R	P	DAL
RER75F453R&	453	30	F	INDUCTIVE	R	P	DAL
RER75F464R&	464	30	F	INDUCTIVE	R	P	DAL
RER75F475R&	475	30	F	INDUCTIVE	R	P	DAL
RER75F487R&	487	30	F	INDUCTIVE	R	P	DAL
RER75F499R&	499	30	F	INDUCTIVE	R	P	DAL
RER75F511R&	511	30	F	INDUCTIVE	R	P	DAL
	Resistance	Power	Resistance		Level 1	Level 2	
Part Number	Value (Ohms)	Rating (W)	Tolerance	Winding	(FRL)(&)	(FRL)(&)	Manufacturer
RER75F523R&	523	30	F	INDUCTIVE	R	P	DAL
RER75F536R&	536	30	F	INDUCTIVE	R	P	DAL
RER75F549R&	549	30	F	INDUCTIVE	R	P	DAL
RER75F562R&	562	30	F	INDUCTIVE	R	P	DAL
RER75F576R&	576	30	F	INDUCTIVE	R	P	DAL
RER75F590R&	590	30	F	INDUCTIVE	R	P	DAL
RER75F604R&	604	30	F	INDUCTIVE	R	P	DAL
RER75F619R&	619	30	F	INDUCTIVE	R	P	DAL
RER75F634R&	634	30	F	INDUCTIVE	R	P	DAL
RER75F649R&	649	30	F	INDUCTIVE	R	P	DAL
RER75F665R&	665	30	F	INDUCTIVE	R	P	DAL
RER75F681R&	681	30	F	INDUCTIVE	R	P	DAL
RER75F698R&	698	30	F	INDUCTIVE	R	P	DAL
	Resistance	Power	Resistance		Level 1	Level 2	
Part Number	Value (Ohms)	Rating (W)	Tolerance	Winding	(FRL)(&)	(FRL)(&)	Manufacturer
RER75F715R&	715	30	F	INDUCTIVE	R	P	DAL
RER75F732R&	732	30	F	INDUCTIVE	R	P	DAL
RER75F750R&	750	30	F	INDUCTIVE	R	P	DAL
RER75F768R&	768	30	F	INDUCTIVE	R	P	DAL
RER75F787R&	787	30	F	INDUCTIVE	R	P	DAL
RER75F806R&	806	30	F	INDUCTIVE	R	P	DAL
RER75F825R&	825	30	F	INDUCTIVE	R	P	DAL
RER75F845R&	845	30	F	INDUCTIVE	R	P	DAL
RER75F866R&	866	30	F	INDUCTIVE	R	P	DAL
RER75F887R&	887	30	F	INDUCTIVE	R	P	DAL
RER75F909R&	909	30	F	INDUCTIVE	R	P	DAL
RER75F931R&	931	30	F	INDUCTIVE	R	P	DAL
RER75F953R&	953	30	F	INDUCTIVE	R	P	DAL
RER75F976R&	976	30	F	INDUCTIVE	R	P	DAL
	Resistance	Power	Resistance		Level 1	Level 2	
Part Number	Value (Ohms)	Rating (W)	Tolerance	Winding	(FRL)(&)	(FRL)(&)	Manufacturer

RER75 Wirewound Resistors: 1000 Ohms through 9760 Ohms

	Resistance	Power	Resistance		Level 1	Level 2	
Part Number	Value (Ohms)	Rating (W)	Tolerance	Winding	(FRL)(&)	(FRL)(&)	Manufacturer
RER75F1001&	1,000	30	F	INDUCTIVE	R	P	DAL
RER75F1021&	1,020	30	F	INDUCTIVE	R	P	DAL
RER75F1051&	1,050	30	F	INDUCTIVE	R	P	DAL
RER75F1071&	1,070	30	F	INDUCTIVE	R	P	DAL
RER75F1101&	1,100	30	F	INDUCTIVE	R	P	DAL
RER75F1131&	1,130	30	F	INDUCTIVE	R	P	DAL
RER75F1151&	1,150	30	F	INDUCTIVE	R	P	DAL
RER75F1181&	1,180	30	F	INDUCTIVE	R	P	DAL
RER75F1211&	1,210	30	F	INDUCTIVE	R	P	DAL
RER75F1241&	1,240	30	F	INDUCTIVE	R	P	DAL
RER75F1271&	1,270	30	F	INDUCTIVE	R	P	DAL
RER75F1301&	1,300	30	F	INDUCTIVE	R	P	DAL
RER75F1331&	1,330	30	F	INDUCTIVE	R	P	DAL
	Resistance	Power	Resistance		Level 1	Level 2	
Part Number	Value (Ohms)	Rating (W)	Tolerance	Winding	(FRL)(&)	(FRL)(&)	Manufacturer
RER75F1371&	1,370	30	F	INDUCTIVE	R	P	DAL
RER75F1401&	1,400	30	F	INDUCTIVE	R	P	DAL
RER75F1431&	1,430	30	F	INDUCTIVE	R	P	DAL
RER75F1471&	1,470	30	F	INDUCTIVE	R	P	DAL
RER75F1501&	1,500	30	F	INDUCTIVE	R	P	DAL
RER75F1541&	1,540	30	F	INDUCTIVE	R	P	DAL
RER75F1581&	1,580	30	F	INDUCTIVE	R	P	DAL
RER75F1621&	1,620	30	F	INDUCTIVE	R	P	DAL
RER75F1651&	1,650	30	F	INDUCTIVE	R	P	DAL
RER75F1691&	1,690	30	F	INDUCTIVE	R	P	DAL
RER75F1741&	1,740	30	F	INDUCTIVE	R	P	DAL
RER75F1781&	1,780	30	F	INDUCTIVE	R	P	DAL
RER75F1821&	1,820	30	F	INDUCTIVE	R	P	DAL
RER75F1871&	1,870	30	F	INDUCTIVE	R	P	DAL
	Resistance	Power	Resistance		Level 1	Level 2	
Part Number	Value (Ohms)	Rating (W)	Tolerance	Winding	(FRL)(&)	(FRL)(&)	Manufacturer
RER75F1911&	1,910	30	F	INDUCTIVE	R	P	DAL
RER75F1961&	1,960	30	F	INDUCTIVE	R	P	DAL
RER75F2001&	2,000	30	F	INDUCTIVE	R	P	DAL
RER75F2051&	2,050	30	F	INDUCTIVE	R	P	DAL
RER75F2101&	2,100	30	F	INDUCTIVE	R	P	DAL
RER75F2151&	2,150	30	F	INDUCTIVE	R	P	DAL
RER75F2211&	2,210	30	F	INDUCTIVE	R	P	DAL
RER75F2261&	2,260	30	F	INDUCTIVE	R	P	DAL
RER75F2321&	2,320	30	F	INDUCTIVE	R	P	DAL
RER75F2371&	2,370	30	F	INDUCTIVE	R	P	DAL
RER75F2431&	2,430	30	F	INDUCTIVE	R	P	DAL
RER75F2491&	2,490	30	F	INDUCTIVE	R	P	DAL

RER75F2551&	2,550	30	F	INDUCTIVE	R	P	DAL
RER75F2611&	2,610	30	F	INDUCTIVE	R	P	DAL
	Resistance	Power	Resistance		Level 1	Level 2	
Part Number	Value (Ohms)	Rating (W)	Tolerance	Winding	(FRL)(&)	(FRL)(&)	Manufacturer
RER75F2671&	2,670	30	F	INDUCTIVE	R	P	DAL
RER75F2741&	2,740	30	F	INDUCTIVE	R	P	DAL
RER75F2801&	2,800	30	F	INDUCTIVE	R	P	DAL
RER75F2871&	2,870	30	F	INDUCTIVE	R	P	DAL
RER75F2941&	2,940	30	F	INDUCTIVE	R	P	DAL
RER75F3011&	3,010	30	F	INDUCTIVE	R	P	DAL
RER75F3091&	3,090	30	F	INDUCTIVE	R	P	DAL
RER75F3161&	3,160	30	F	INDUCTIVE	R	P	DAL
RER75F3241&	3,240	30	F	INDUCTIVE	R	P	DAL
RER75F3321&	3,320	30	F	INDUCTIVE	R	P	DAL
RER75F3401&	3,400	30	F	INDUCTIVE	R	P	DAL
RER75F3481&	3,480	30	F	INDUCTIVE	R	P	DAL
RER75F3571&	3,570	30	F	INDUCTIVE	R	P	DAL
RER75F3651&	3,650	30	F	INDUCTIVE	R	P	DAL
	Resistance	Power	Resistance		Level 1	Level 2	
Part Number	Value (Ohms)	Rating (W)	Tolerance	Winding	(FRL)(&)	(FRL)(&)	Manufacturer
RER75F3741&	3,740	30	F	INDUCTIVE	R	P	DAL
RER75F3831&	3,830	30	F	INDUCTIVE	R	P	DAL
RER75F3921&	3,920	30	F	INDUCTIVE	R	P	DAL
RER75F4021&	4,020	30	F	INDUCTIVE	R	P	DAL
RER75F4121&	4,120	30	F	INDUCTIVE	R	P	DAL
RER75F4221&	4,220	30	F	INDUCTIVE	R	P	DAL
RER75F4321&	4,320	30	F	INDUCTIVE	R	P	DAL
RER75F4421&	4,420	30	F	INDUCTIVE	R	P	DAL
RER75F4531&	4,530	30	F	INDUCTIVE	R	P	DAL
RER75F4641&	4,640	30	F	INDUCTIVE	R	P	DAL
RER75F4751&	4,750	30	F	INDUCTIVE	R	P	DAL
RER75F4871&	4,870	30	F	INDUCTIVE	R	P	DAL
RER75F4991&	4,990	30	F	INDUCTIVE	R	P	DAL
RER75F5111&	5,110	30	F	INDUCTIVE	R	P	DAL
	Resistance	Power	Resistance		Level 1	Level 2	
Part Number	Value (Ohms)	Rating (W)	Tolerance	Winding	(FRL)(&)	(FRL)(&)	Manufacturer
RER75F5231&	5,230	30	F	INDUCTIVE	R	P	DAL
RER75F5361&	5,360	30	F	INDUCTIVE	R	P	DAL
RER75F5491&	5,490	30	F	INDUCTIVE	R	P	DAL
RER75F5621&	5,620	30	F	INDUCTIVE	R	P	DAL
RER75F5761&	5,760	30	F	INDUCTIVE	R	P	DAL
RER75F5901&	5,900	30	F	INDUCTIVE	R	P	DAL
RER75F6041&	6,040	30	F	INDUCTIVE	R	P	DAL
RER75F6191&	6,190	30	F	INDUCTIVE	R	P	DAL
RER75F6341&	6,340	30	F	INDUCTIVE	R	P	DAL
RER75F6491&	6,490	30	F	INDUCTIVE	R	P	DAL
RER75F6651&	6,650	30	F	INDUCTIVE	R	P	DAL

RER75F6811&	6,810	30	F	INDUCTIVE	R	P	DAL
RER75F6981&	6,980	30	F	INDUCTIVE	R	P	DAL
	Resistance	Power	Resistance		Level 1	Level 2	
Part Number	Value (Ohms)	Rating (W)	Tolerance	Winding	(FRL)(&)	(FRL)(&)	Manufacturer
RER75F7151&	7,150	30	F	INDUCTIVE	R	P	DAL
RER75F7321&	7,320	30	F	INDUCTIVE	R	P	DAL
RER75F7501&	7,500	30	F	INDUCTIVE	R	P	DAL
RER75F7681&	7,680	30	F	INDUCTIVE	R	P	DAL
RER75F7871&	7,870	30	F	INDUCTIVE	R	P	DAL
RER75F8061&	8,060	30	F	INDUCTIVE	R	P	DAL
RER75F8251&	8,250	30	F	INDUCTIVE	R	P	DAL
RER75F8451&	8,450	30	F	INDUCTIVE	R	P	DAL
RER75F8661&	8,660	30	F	INDUCTIVE	R	P	DAL
RER75F8871&	8,870	30	F	INDUCTIVE	R	P	DAL
RER75F9091&	9,090	30	F	INDUCTIVE	R	P	DAL
RER75F9311&	9,310	30	F	INDUCTIVE	R	P	DAL
RER75F9531&	9,530	30	F	INDUCTIVE	R	P	DAL
RER75F9761&	9,760	30	F	INDUCTIVE	R	P	DAL

RER75 Wirewound Resistors: 10000 Ohms through 39200 Ohms

	Resistance	Power	Resistance		Level 1	Level 2	
Part Number	Value (Ohms)	Rating (W)	Tolerance	Winding	(FRL)(&)	(FRL)(&)	Manufacturer
RER75F1002&	10,000	30	F	INDUCTIVE	R	P	DAL
RER75F1022&	10,200	30	F	INDUCTIVE	R	P	DAL
RER75F1052&	10,500	30	F	INDUCTIVE	R	P	DAL
RER75F1072&	10,700	30	F	INDUCTIVE	R	P	DAL
RER75F1102&	11,000	30	F	INDUCTIVE	R	P	DAL
RER75F1132&	11,300	30	F	INDUCTIVE	R	P	DAL
RER75F1152&	11,500	30	F	INDUCTIVE	R	P	DAL
RER75F1182&	11,800	30	F	INDUCTIVE	R	P	DAL
RER75F1212&	12,100	30	F	INDUCTIVE	R	P	DAL
RER75F1242&	12,400	30	F	INDUCTIVE	R	P	DAL
RER75F1272&	12,700	30	F	INDUCTIVE	R	P	DAL
RER75F1302&	13,000	30	F	INDUCTIVE	R	P	DAL
RER75F1332&	13,300	30	F	INDUCTIVE	R	P	DAL
	Resistance	Power	Resistance		Level 1	Level 2	
Part Number	Value (Ohms)	Rating (W)	Tolerance	Winding	(FRL)(&)	(FRL)(&)	Manufacturer
RER75F1372&	13,700	30	F	INDUCTIVE	R	P	DAL
RER75F1402&	14,000	30	F	INDUCTIVE	R	P	DAL
RER75F1432&	14,300	30	F	INDUCTIVE	R	P	DAL
RER75F1472&	14,700	30	F	INDUCTIVE	R	P	DAL
RER75F1502&	15,000	30	F	INDUCTIVE	R	P	DAL
RER75F1542&	15,400	30	F	INDUCTIVE	R	P	DAL
RER75F1582&	15,800	30	F	INDUCTIVE	R	P	DAL

RER75F1622&	16,200	30	F	INDUCTIVE	R	P	DAL
RER75F1652&	16,500	30	F	INDUCTIVE	R	P	DAL
RER75F1692&	16,900	30	F	INDUCTIVE	R	P	DAL
RER75F1742&	17,400	30	F	INDUCTIVE	R	P	DAL
RER75F1782&	17,800	30	F	INDUCTIVE	R	P	DAL
RER75F1822&	18,200	30	F	INDUCTIVE	R	P	DAL
RER75F1872&	18,700	30	F	INDUCTIVE	R	P	DAL
	Resistance	Power	Resistance		Level 1	Level 2	
Part Number	Value (Ohms)	Rating (W)	Tolerance	Winding	(FRL)(&)	(FRL)(&)	Manufacturer
RER75F1912&	19,100	30	F	INDUCTIVE	R	P	DAL
RER75F1962&	19,600	30	F	INDUCTIVE	R	P	DAL
RER75F2002&	20,000	30	F	INDUCTIVE	R	P	DAL
RER75F2052&	20,500	30	F	INDUCTIVE	R	P	DAL
RER75F2102&	21,000	30	F	INDUCTIVE	R	P	DAL
RER75F2152&	21,500	30	F	INDUCTIVE	R	P	DAL
RER75F2212&	22,100	30	F	INDUCTIVE	R	P	DAL
RER75F2262&	22,600	30	F	INDUCTIVE	R	P	DAL
RER75F2322&	23,200	30	F	INDUCTIVE	R	P	DAL
RER75F2372&	23,700	30	F	INDUCTIVE	R	P	DAL
RER75F2432&	24,300	30	F	INDUCTIVE	R	P	DAL
RER75F2492&	24,900	30	F	INDUCTIVE	R	P	DAL
RER75F2552&	25,500	30	F	INDUCTIVE	R	P	DAL
RER75F2612&	26,100	30	F	INDUCTIVE	R	P	DAL
	Resistance	Power	Resistance		Level 1	Level 2	
Part Number	Value (Ohms)	Rating (W)	Tolerance	Winding	(FRL)(&)	(FRL)(&)	Manufacturer
RER75F2672&	26,700	30	F	INDUCTIVE	R	P	DAL
RER75F2742&	27,400	30	F	INDUCTIVE	R	P	DAL
RER75F2802&	28,000	30	F	INDUCTIVE	R	P	DAL
RER75F2872&	28,700	30	F	INDUCTIVE	R	P	DAL
RER75F2942&	29,400	30	F	INDUCTIVE	R	P	DAL
RER75F3012&	30,100	30	F	INDUCTIVE	R	P	DAL
RER75F3092&	30,900	30	F	INDUCTIVE	R	P	DAL
RER75F3162&	31,600	30	F	INDUCTIVE	R	P	DAL
RER75F3242&	32,400	30	F	INDUCTIVE	R	P	DAL
RER75F3322&	33,200	30	F	INDUCTIVE	R	P	DAL
RER75F3402&	34,000	30	F	INDUCTIVE	R	P	DAL
RER75F3482&	34,800	30	F	INDUCTIVE	R	P	DAL
RER75F3572&	35,700	30	F	INDUCTIVE	R	P	DAL
RER75F3652&	36,500	30	F	INDUCTIVE	R	P	DAL
	Resistance	Power	Resistance		Level 1	Level 2	
Part Number	Value (Ohms)	Rating (W)	Tolerance	Winding	(FRL)(&)	(FRL)(&)	Manufacturer
RER75F3742&	37,400	30	F	INDUCTIVE	R	P	DAL
RER75F3832&	38,300	30	F	INDUCTIVE	R	P	DAL
RER75F3922&	39,200	30	F	INDUCTIVE	R	P	DAL

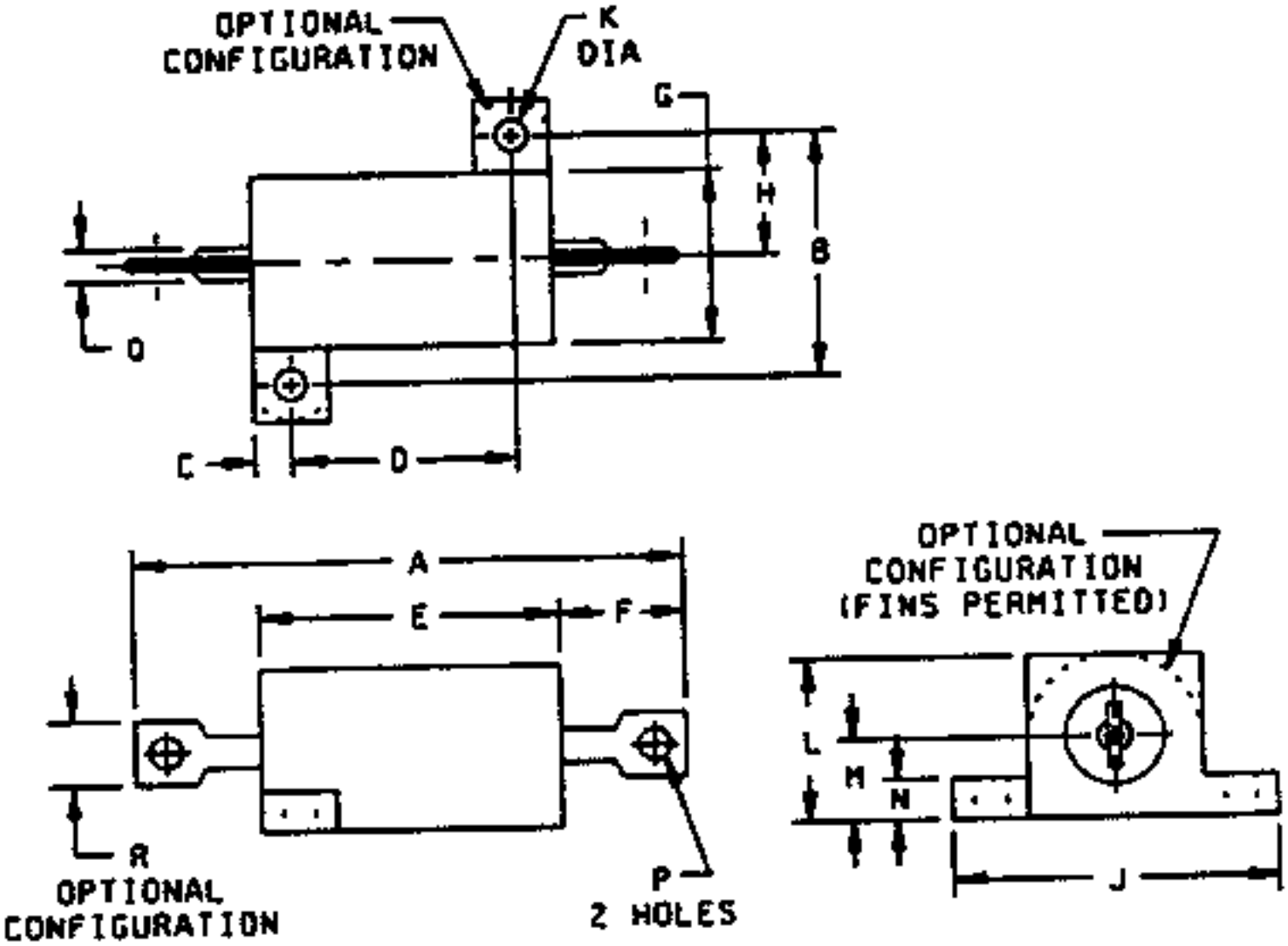
OPTIONAL
CONFIGURATION
K
DIA
G
H
B
Q
C
D
A
E
F
R
OPTIONAL
CONFIGURATION
P
2 HOLES
OPTIONAL
CONFIGURATION
(FINS PERMITTED)
L
M
N
J

Resistor Style	A +/-.062	B +/-.010	C +/-.031	D +/-.010	E +/-.062	F +/-.062	G +/-.062	H +/-.031	J +/-.031	K +/-.005	L +/-.031	M +/-.062	N +/-.031	P +/-.005	Q min AWG	R min
RER40, RER60	1.125	0.490	0.078	0.444	0.600	0.266	0.334	0.245	0.646	0.093	0.320	0.133	0.065	0.050	16	0.085
RER45, RER65	1.375	0.625	0.094	0.562	0.750	0.312	0.438	0.312	0.812	0.094	0.406	0.203	0.094	0.085	12	0.140
RER50, RER70	1.938	0.781	0.172	0.719	1.062	0.438	0.531	0.391	1.094	0.125	0.562	0.281	0.094	0.085	12	0.140
RER55, RER75	2.781	0.844	0.188	1.562	1.938	0.438	0.594	0.422	1.156	0.125	0.625	0.312	0.094	0.085	12	0.140

NOTES:

1. Dimensions are in inches

Click on the link below to see the associated parts selection listing:

Style	Detail Specification	Description
RTR22	MIL-PRF-39015/2	0.75 Watt (Click Here for Dimensions) Nominal values: 100 ohms to 20 kohms
RTR24	MIL-PRF-39015/3	0.75 Watt (Click Here for Dimensions) Nominal values: 10 ohms to 10 kohms

APPLICATION NOTES FOR MIL-PRF-39015

1) Parts covered by this specification may contain internal soldered connections that may reflow during installation. Special care must be exercised when soldering to prevent internal solder reflow. Welded connections are recommended for space flight use. Consult the manufacturer for construction details.

2) The maximum resistance value of preferred wirewound resistors is constrained by the size of the wire used in their construction. Wire size of less than 0.001 inch (0.03 mm) in nominal diameter is not recommended for NASA use.

3) Variable resistors are not recommended for

Level 1

applications.

Part Number Ordering Information, example and explanation:

M39015/2-001LP where,

M39015	/2	-001
Style (Variable, Wirewound, (Lead Screw Actuated), Established Reliability Resistors Conforming to MIL-PRF-39015)	Specification Sheet	Non-Significant Dash Number Signifying Nominal Resistance, Max. Resolutio

Part number ordering options are developed using the following criteria:

Style	Detail Specification	Description
RTR22	MIL-PRF-39015/2	0.75 Watt
RTR24	MIL-PRF-39015/3	0.75 Watt

Terminal Type
L = Flexible Insulated Wire Leads
P = Printed Circuit Pin (Base Mount)

W = Printed Circuit Pin (Edge Mount)
X = Printed Circuit Pin (Edge Mount Alternate Configuration)

Failure Rate Level
P = 0.1%/1000 hrs (Level 2)

Revision History for MIL-PRF-39015 in the NPSL

1/21/99	Dimensional drawings were added.
11/28/97	Made changes indicating the specification conversion to a performance specification (MIL-PRF-39015 instead of MIL-R-39015)
07/01/97	Initial Release of MIL-R-39015 Section in the NPSL

Go to -
NEPP
|
NPSL
|
Resistors
MIL-PRF-39015, RESISTORS
Variable, Resistor, Wirewound, (Lead Screw Actuated), Established Reliability
RTR Styles
Part Number/Ordering Explanation
Important! Application Notes
Revision History for MIL-PRF-39015 Listing in the NPSL
Last Revision: 1/21/99
RTR22 Variable Wirewound Resistors

	Nominal	Power	Resistance	Maximum	Terminal	Level 2	
Part Number	Value (Ohms)	Rating (W)	Tolerance (+/-%)	Resolution (+/-%)	Type	FRL	Manufacturer
M39015/2-001%P	100	3/4	5	0.51	L, P, W, X	P	-
M39015/2-002%P	200	3/4	5	0.42	L, P, W, X	P	-
M39015/2-003%P	500	3/4	5	0.42	L, P, W, X	P	BRN
M39015/2-004%P	1,000	3/4	5	0.36	L, P, W, X	P	BRN
M39015/2-005%P	2,000	3/4	5	0.29	L, P, W, X	P	BRN
M39015/2-006%P	5,000	3/4	5	0.26	L, P, W, X	P	BRN
M39015/2-007%P	10,000	3/4	5	0.14	L, P, W, X	P	BRN
M39015/2-008%P	20,000	3/4	5	0.11	L, P, W, X	P	BRN

Style RTR22

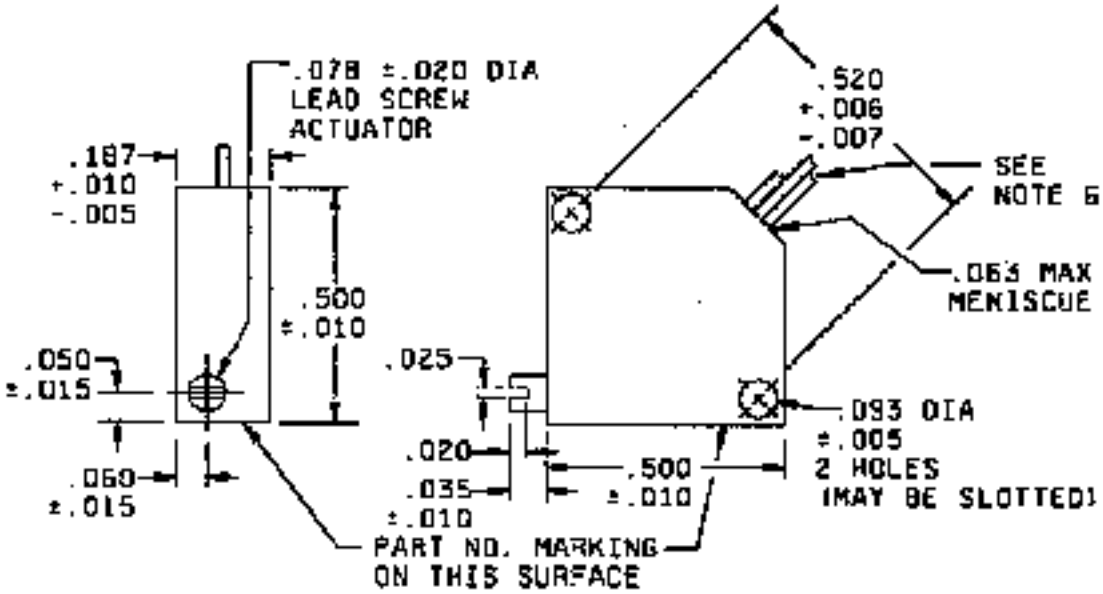

FLEXIBLE LEAD TYPE TERMINAL-L

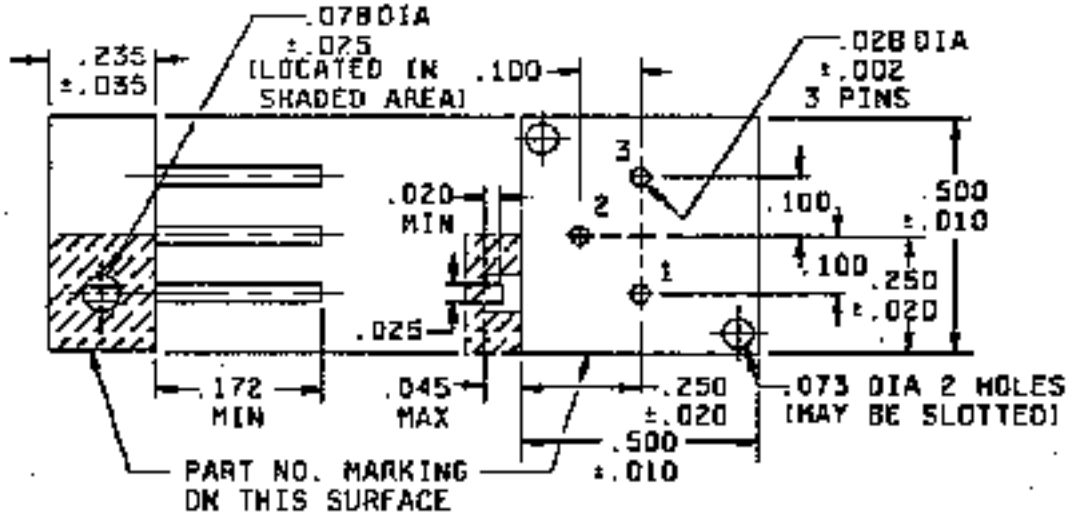

TERMINAL TYPE P

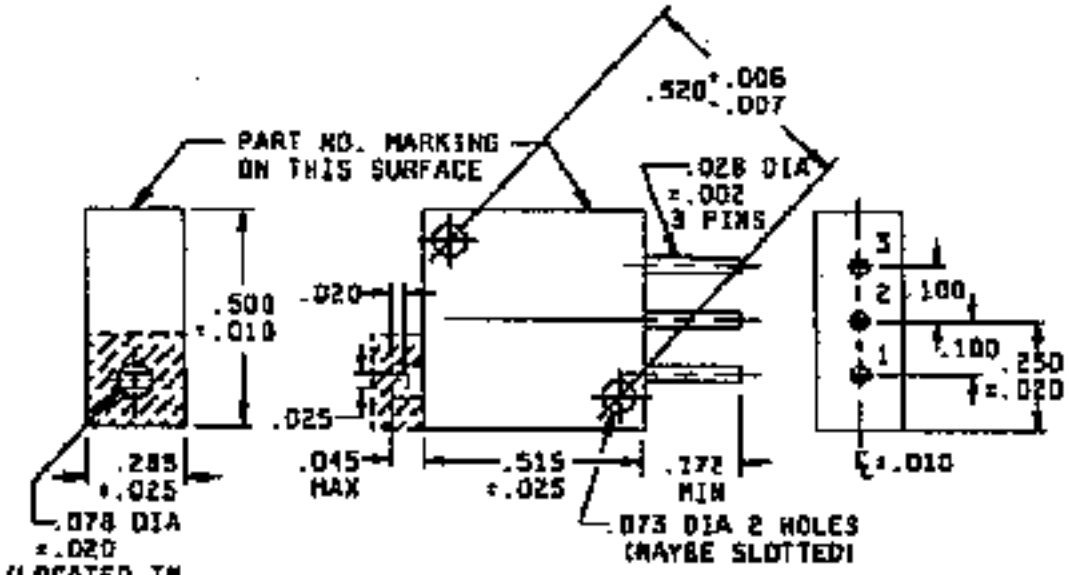

TERMINAL TYPE W

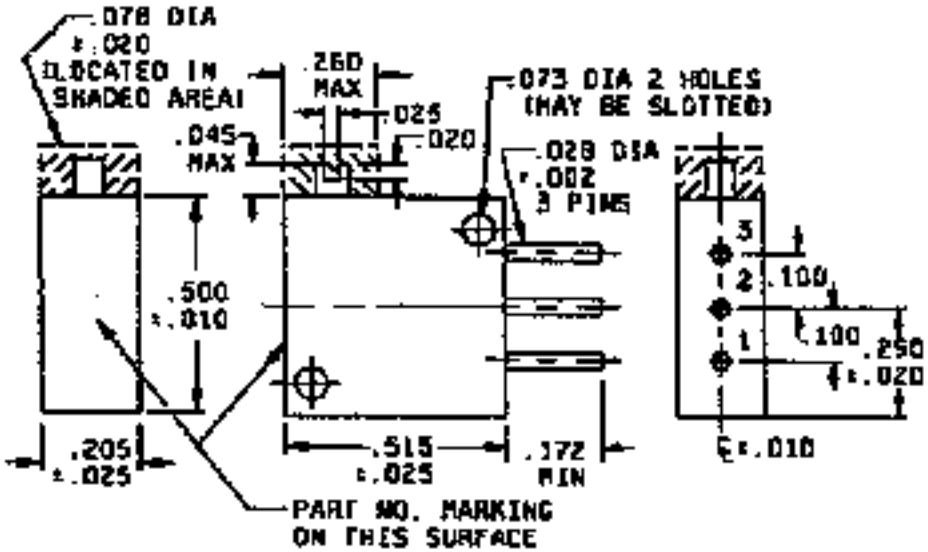

TERMINAL TYPE X

Notes:

1) Dimensions are in inches.

2) Unless otherwise specified, tolerance is +/- 0.005 (0.13 mm).

3) Metric equivalents (to the nearest 0.1 mm) are given for general information only.

4) The entire slot of the actuating screw must be above the surface of the unit.

5) For types P, W, and X, normal mounting means is by use of pins only.

6) The three leads shall be of the stranded wire, AWG size 28 to 30, having a minimum length of 6 (152.4 mm); they shall be insulated with polytetrafluoroethylene, stripped 0.250 +/- 0.62 (6.35 +/- 1.57 mm) from the end, and color coded.

7) Dimensions not shown are the same as for type P.

8) The picturization of the styles above are given as representative of the envelope of the item. Slight deviations from the outline shown, which are contained within the envelope, and do not alter the functional aspects of the device are acceptable.

9) Mounting holes and/or slots ar optional for terminal styles P, W, and X.

RTR24 Variable Wirewound Resistors

	Nominal	Power	Resistance	Maximum	Terminal	Level 2	
Part Number	Value (Ohms)	Rating (W)	Tolerance (+/-%)	Resolution (+/-%)	Type	FRL	Manufacturer
M39015/3-001%P	10	3/4	5	1.30	L, P, W, X	P	-
M39015/3-002%P	20	3/4	5	1.10	L, P, W, X	P	-
M39015/3-003%P	50	3/4	5	0.77	L, P, W, X	P	-
M39015/3-004%P	100	3/4	5	0.62	L, P, W, X	P	-
M39015/3-005%P	200	3/4	5	0.55	L, P, W, X	P	-
M39015/3-006%P	500	3/4	5	0.51	L, P, W, X	P	BRN
M39015/3-007%P	1,000	3/4	5	0.37	L, P, W, X	P	BRN
M39015/3-008%P	2,000	3/4	5	0.30	L, P, W, X	P	BRN
M39015/3-009%P	5,000	3/4	5	0.25	L, P, W, X	P	BRN
M39015/3-010%P	10,000	3/4	5	0.10	L, P, W, X	P	BRN

Style RTR24

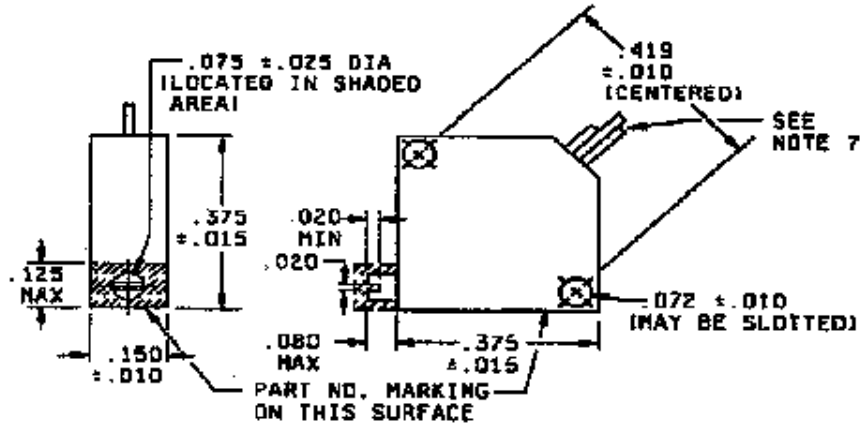

TERMINAL TYPE-L

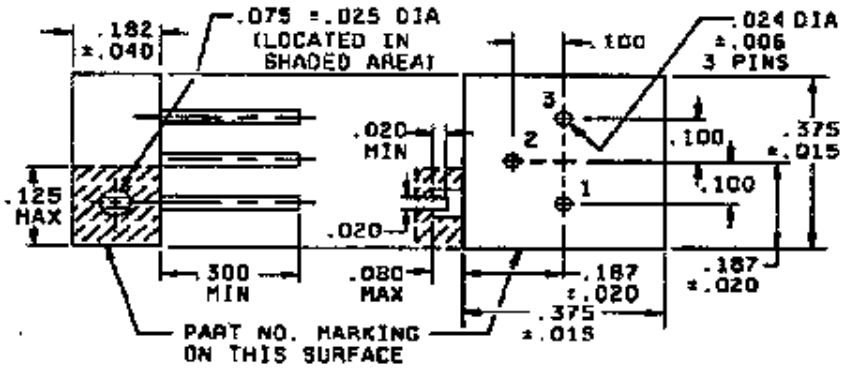

TERMINAL TYPE P

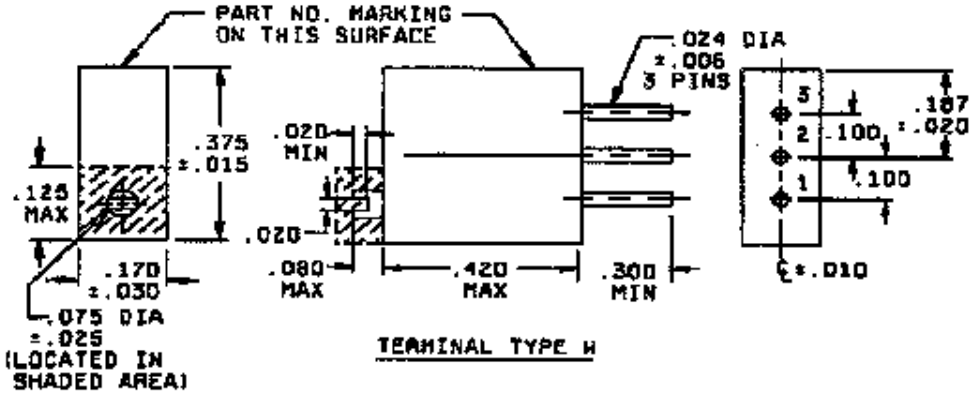

TERMINAL TYPE H

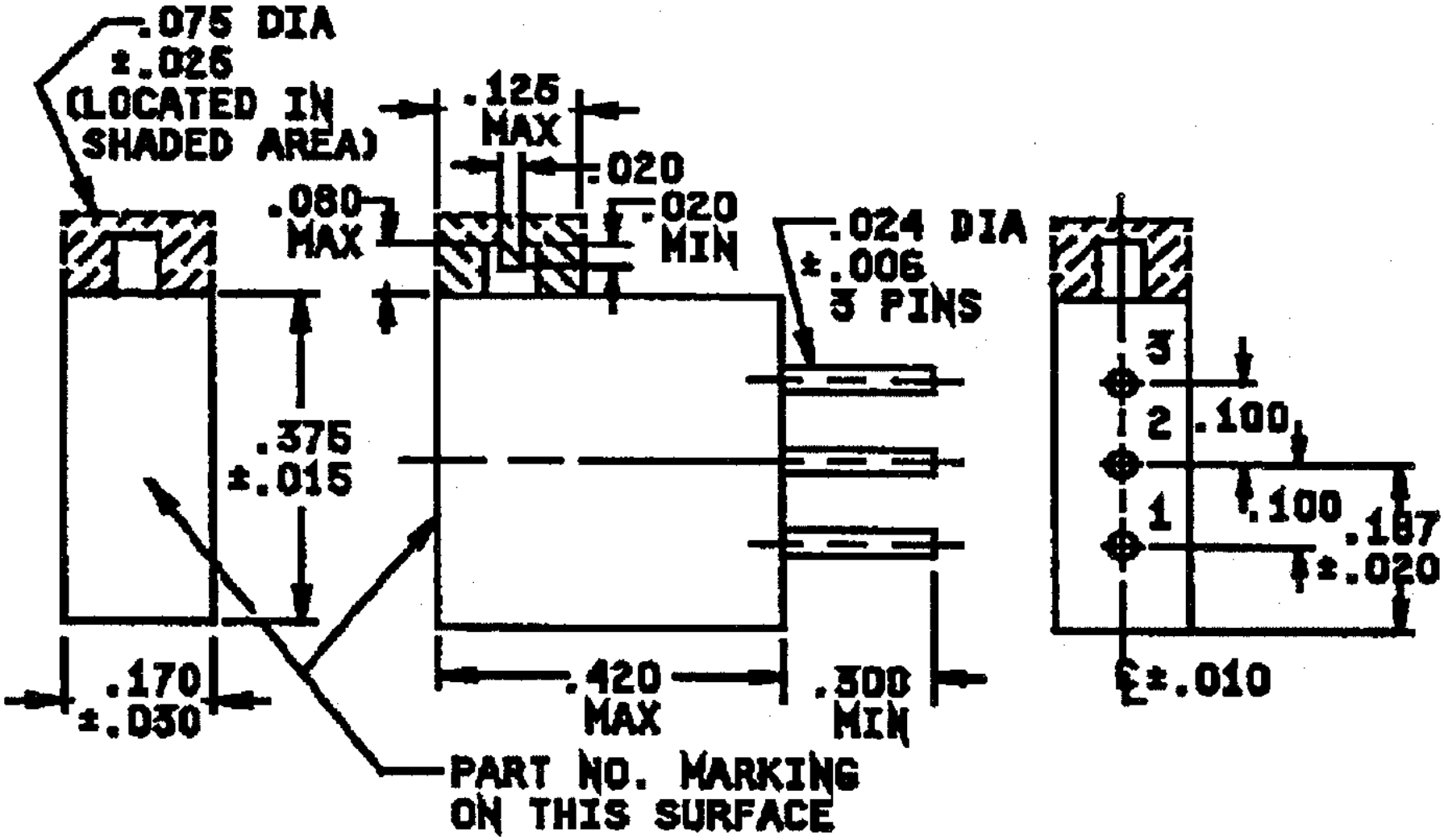

TERMINAL TYPE X

Notes:

1) Dimensions are in inches.

2) Unless otherwise specified, tolerance is +/- 0.005 (0.13 mm).

3) Metric equivalents (to the nearest 0.01 mm) are given for general information.

4) The entire slot of the actuating screw must be above the surface of the unit.

5) For types P, W, and X, normal mounting means is by use of pins only.

6) The picturization of the styles above are given as representative of the envelope of the item. Slight deviations from the outline shown, which are contained within the envelope, and do not alter the functional aspects of the device are acceptable.

7) The three leads shall be of the stranded wire, AWG size 28 to size 30, having a minimum length of 6 (152.4 mm); they shall be insulated with polytetrafluoroethylene, stripped 0.250 +/- 0.062 (6.35 mm +/- 1.57 mm) from the end, and color coded.

APPLICATION NOTES FOR MIL-PRF-39017

1) MIL-PRF-39017 resistors made with "thin" film construction are sensitive to Electrostatic Discharges (ESD).

Part Number Ordering Information, example and explanation:

RLR05C1001FS where,

RLR	05	C	1001	F
Style (Fixed, Film (Insulated), Established Reliability Resistors Conforming to MIL-PRF-39017)	Shape, Dimensions, Power Rating of the Resistor	Terminal Characteristics	Resistance Value (Ohms)	Resistance

Part number ordering options are developed using the following criteria:

Style	Detail Specification
RLR05	MIL-PRF-39017/5
RLR07	MIL-PRF-39017/1
RLR20	MIL-PRF-39017/2
RLR32	MIL-PRF-39017/3

Terminal Characteristics
C = Solderable/Weldable

Resistance Tolerance
F = +/- 1%

G = +/- 2%

Failure Rate Level
P = 0.1%/1000 hrs (Level 2)
R = 0.01%/1000 hrs (Level 2)
S = 0.001%/1000 hrs (Level 1)

Resistance Values:

Resistance values in ohms are contained in the following listing. When ordering, the first three digits represent significant figures and the last digit specifies the number of zeroes to follow. For example 1001 indicates 1,000 ohms and 1002 indicates 10,000 ohms. For values less than or equal to 100 ohms the letter "R" is used to indicate a decimal point. For example 10R0 indicates 10.0 ohms.

Revison History for MIL-PRF-39017 Listing in the NPSL

07/27/98	Added application note warning that thin film resistor types are electrostatic sensitive (ESD).
03/12/98	Corrected parts listing tables to fix error in the available "decade" values. Errors existed for all decade values from 767 through 976.
03/02/98	Added dimensional drawings to this section
11/28/97	Made changes indicating the specification conversion to a performance specification (MIL-PRF-39017 instead of MIL-R-39017)
07/01/97	Initial Release of MIL-R-39017 Section in the NPSL

Go to -

NEPP

|

NPSL

|

Resistors

MIL-PRF-39017, RESISTORS

Fixed, Resistor, Film, (Insulated), Established Reliability

RLR Styles

Part Number/Ordering Explanation

Important! Application Notes

Revision History for MIL-PRF-39017 Listing in the NPSL

Last Revision: 07/27/98

Click on the link below to see the associated parts selection listing:

Style	Detail Specification	Description (Length x Diameter) [Click the Link Below for Dimesional Drawing]
RLR05	MIL-PRF-39017/5	1/8 Watt, Tubular, Axial Lead (0.150" x 0.066") 4.7 ohms to 1 Mohm
RLR07	MIL-PRF-39017/1	1/4 Watt, Tubular, Axial Lead (0.250" x 0.090") 10 ohms to 22 Mohms
RLR20	MIL-PRF-39017/2	1/2 Watt, Tubular, Axial Lead (0.375" x 0.138") 4.3 ohms to 3.01 Mohms
RLR32	MIL-PRF-39017/3	1 Watt, Tubular, Axial Lead (0.562" x 0.190") 10 ohms to 2.7 Mohms

RLR05 Film Resistors

Part Number	Resistance Value (Ohms)	Power Rating (W)	Resistance Tolerance (%)	Level 1 (FRL)(&)	Level 2 (FRL)(&)	Manufacturer
RLR05C4R70%&	4.70	1/8	G	S	P, R	DAL
RLR05C4R75%&	4.75	1/8	F	S	P, R	DAL
RLR05C4R87%&	4.87	1/8	F	S	P, R	DAL
RLR05C4R99%&	4.99	1/8	F	S	P, R	DAL
RLR05C5R10%&	5.10	1/8	G	S	P, R	DAL
RLR05C5R11%&	5.11	1/8	F	S	P, R	DAL
RLR05C5R23%&	5.23	1/8	F	S	P, R	DAL
RLR05C5R36%&	5.36	1/8	F	S	P, R	DAL
RLR05C5R49%&	5.49	1/8	F	S	P, R	DAL
RLR05C5R60%&	5.60	1/8	G	S	P, R	DAL
RLR05C5R62%&	5.62	1/8	F	S	P, R	DAL
RLR05C5R76%&	5.76	1/8	F	S	P, R	DAL
RLR05C5R90%&	5.90	1/8	F	S	P, R	DAL
RLR05C6R04%&	6.04	1/8	F	S	P, R	DAL
RLR05C6R19%&	6.19	1/8	F	S	P, R	DAL
RLR05C6R20%&	6.20	1/8	G	S	P, R	DAL
RLR05C6R34%&	6.34	1/8	F	S	P, R	DAL
RLR05C6R49%&	6.49	1/8	F	S	P, R	DAL
RLR05C6R65%&	6.65	1/8	F	S	P, R	DAL
RLR05C6R80%&	6.80	1/8	G	S	P, R	DAL
RLR05C6R81%&	6.81	1/8	F	S	P, R	DAL
RLR05C6R98%&	6.98	1/8	F	S	P, R	DAL
RLR05C7R15%&	7.15	1/8	F	S	P, R	DAL
RLR05C7R32%&	7.32	1/8	F	S	P, R	DAL
RLR05C7R50%&	7.50	1/8	F	S	P, R	DAL
RLR05C7R68%&	7.68	1/8	F	S	P, R	DAL
RLR05C7R87%&	7.87	1/8	F	S	P, R	DAL
RLR05C8R06%&	8.06	1/8	F	S	P, R	DAL
RLR05C8R20%&	8.20	1/8	G	S	P, R	DAL
RLR05C8R25%	8.25	1/8	F	S	P, R	DAL
RLR05C8R45%&	8.45	1/8	F	S	P, R	DAL
RLR05C8R67%&	8.67	1/8	F	S	P, R	DAL
RLR05C8R87%&	8.87	1/8	F	S	P, R	DAL
RLR05C9R09%&	9.09	1/8	F	S	P, R	DAL
RLR05C9R10%&	9.10	1/8	G	S	P, R	DAL
RLR05C9R31%&	9.31	1/8	F	S	P, R	DAL
RLR05C9R53%&	9.53	1/8	F	S	P, R	DAL
RLR05C9R76%&	9.76	1/8	F	S	P, R	DAL
RLR05C10R0%&	10.0	1/8	F, G	S	P, R	DAL, IRC
RLR05C10R2%&	10.2	1/8	F	S	P, R	DAL, IRC

RLR05C10R5%&	10.5	1/8	F	S	P, R	DAL, IRC
RLR05C10R7%&	10.7	1/8	F	S	P, R	DAL, IRC
RLR05C11R0%&	11.0	1/8	F, G	S	P, R	DAL, IRC
RLR05C11R3%&	11.3	1/8	F	S	P, R	DAL, IRC
RLR05C11R5%&	11.5	1/8	F	S	P, R	DAL, IRC
RLR05C11R8%&	11.8	1/8	F	S	P, R	DAL, IRC
RLR05C12R0%&	12.0	1/8	G	S	P, R	DAL, IRC
RLR05C12R1%&	12.1	1/8	F	S	P, R	DAL, IRC
RLR05C12R4%&	12.4	1/8	F	S	P, R	DAL, IRC
RLR05C12R7%&	12.7	1/8	F	S	P, R	DAL, IRC
RLR05C13R0%&	13.0	1/8	F, G	S	P, R	DAL, IRC
RLR05C13R3%&	13.3	1/8	F	S	P, R	DAL, IRC
RLR05C13R7%&	13.7	1/8	F	S	P, R	DAL, IRC
RLR05C14R0%&	14.0	1/8	F	S	P, R	DAL, IRC
RLR05C14R3%&	14.3	1/8	F	S	P, R	DAL, IRC
RLR05C14R7%&	14.7	1/8	F	S	P, R	DAL, IRC
RLR05C15R0%&	15.0	1/8	F, G	S	P, R	DAL, IRC
RLR05C15R4%&	15.4	1/8	F	S	P, R	DAL, IRC
RLR05C15R8%&	15.8	1/8	F	S	P, R	DAL, IRC
RLR05C16R0%&	16.0	1/8	G	S	P, R	DAL, IRC
RLR05C16R2%&	16.2	1/8	F	S	P, R	DAL, IRC
RLR05C16R5%&	16.5	1/8	F	S	P, R	DAL, IRC
RLR05C16R9%&	16.9	1/8	F	S	P, R	DAL, IRC
RLR05C17R4%&	17.4	1/8	F	S	P, R	DAL, IRC
RLR05C17R8%&	17.8	1/8	F	S	P, R	DAL, IRC
RLR05C18R0%&	18.0	1/8	G	S	P, R	DAL, IRC
RLR05C18R2%&	18.2	1/8	F	S	P, R	DAL, IRC
RLR05C18R7%&	18.7	1/8	F	S	P, R	DAL, IRC
RLR05C19R1%&	19.1	1/8	F	S	P, R	DAL, IRC
RLR05C19R6%&	19.6	1/8	F	S	P, R	DAL, IRC
RLR05C20R0%&	20.0	1/8	F, G	S	P, R	DAL, IRC
RLR05C20R5%&	20.5	1/8	F	S	P, R	DAL, IRC
RLR05C21R0%&	21.0	1/8	F	S	P, R	DAL, IRC
RLR05C21R5%&	21.5	1/8	F	S	P, R	DAL, IRC
RLR05C22R0%&	22.0	1/8	G	S	P, R	DAL, IRC
RLR05C22R1%&	22.1	1/8	F	S	P, R	DAL, IRC
RLR05C22R6%&	22.6	1/8	F	S	P, R	DAL, IRC
RLR05C23R2%&	23.2	1/8	F	S	P, R	DAL, IRC
RLR05C23R7%&	23.7	1/8	F	S	P, R	DAL, IRC
RLR05C24R0%&	24.0	1/8	G	S	P, R	DAL, IRC
RLR05C24R3%&	24.3	1/8	F	S	P, R	DAL, IRC
RLR05C24R9%&	24.9	1/8	F	S	P, R	DAL, IRC
RLR05C25R5%&	25.5	1/8	F	S	P, R	DAL, IRC
RLR05C26R1%&	26.1	1/8	F	S	P, R	DAL, IRC
RLR05C26R7%&	26.7	1/8	F	S	P, R	DAL, IRC
RLR05C27R0%&	27.0	1/8	G	S	P, R	DAL, IRC
RLR05C27R4%&	27.4	1/8	F	S	P, R	DAL, IRC

RLR05C28R0%&	28.0	1/8	F	S	P, R	DAL, IRC
RLR05C28R7%&	28.7	1/8	F	S	P, R	DAL, IRC
RLR05C29R4%&	29.4	1/8	F	S	P, R	DAL, IRC
RLR05C30R0%&	30.0	1/8	G	S	P, R	DAL, IRC
RLR05C30R1%&	30.1	1/8	F	S	P, R	DAL, IRC
RLR05C30R9%&	30.9	1/8	F	S	P, R	DAL, IRC
RLR05C31R6%&	31.6	1/8	F	S	P, R	DAL, IRC
RLR05C32R4%&	32.4	1/8	F	S	P, R	DAL, IRC
RLR05C33R0%&	33.0	1/8	G	S	P, R	DAL, IRC
RLR05C33R2%&	33.2	1/8	F	S	P, R	DAL, IRC
RLR05C34R0%&	34.0	1/8	F	S	P, R	DAL, IRC
RLR05C34R8%&	34.8	1/8	F	S	P, R	DAL, IRC
RLR05C35R7%&	35.7	1/8	F	S	P, R	DAL, IRC
RLR05C36R0%&	36.0	1/8	G	S	P, R	DAL, IRC
RLR05C36R5%&	36.5	1/8	F	S	P, R	DAL, IRC
RLR05C37R4%&	37.4	1/8	F	S	P, R	DAL, IRC
RLR05C38R3%&	38.3	1/8	F	S	P, R	DAL, IRC
RLR05C39R0%&	39.0	1/8	G	S	P, R	DAL, IRC
RLR05C39R2%&	39.2	1/8	F	S	P, R	DAL, IRC
RLR05C40R2%&	40.2	1/8	F	S	P, R	DAL, IRC
RLR05C41R2%&	41.2	1/8	F	S	P, R	DAL, IRC
RLR05C42R2%&	42.2	1/8	F	S	P, R	DAL, IRC
RLR05C43R0%&	43.0	1/8	G	S	P, R	DAL, IRC
RLR05C43R2%&	43.2	1/8	F	S	P, R	DAL, IRC
RLR05C44R2%&	44.2	1/8	F	S	P, R	DAL, IRC
RLR05C45R3%&	45.3	1/8	F	S	P, R	DAL, IRC
RLR05C46R4%&	46.4	1/8	F	S	P, R	DAL, IRC
RLR05C47R0%&	47.0	1/8	G	S	P, R	DAL, IRC
RLR05C47R5%&	47.5	1/8	F	S	P, R	DAL, IRC
RLR05C48R7%&	48.7	1/8	F	S	P, R	DAL, IRC
RLR05C49R9%&	49.9	1/8	F	S	P, R	DAL, IRC
RLR05C51R0%&	51.0	1/8	G	S	P, R	DAL, IRC
RLR05C51R1%&	51.1	1/8	F	S	P, R	DAL, IRC
RLR05C52R3%&	52.3	1/8	F	S	P, R	DAL, IRC
RLR05C53R6%&	53.6	1/8	F	S	P, R	DAL, IRC
RLR05C54R9%&	54.9	1/8	F	S	P, R	DAL, IRC
RLR05C56R0%&	56.0	1/8	G	S	P, R	DAL, IRC
RLR05C56R2%&	56.2	1/8	F	S	P, R	DAL, IRC
RLR05C57R6%&	57.6	1/8	F	S	P, R	DAL, IRC
RLR05C59R0%&	59.0	1/8	F	S	P, R	DAL, IRC
RLR05C60R4%&	60.4	1/8	F	S	P, R	DAL, IRC
RLR05C61R9%&	61.9	1/8	F	S	P, R	DAL, IRC
RLR05C62R0%&	62.0	1/8	G	S	P, R	DAL, IRC
RLR05C63R4%&	63.4	1/8	F	S	P, R	DAL, IRC
RLR05C64R9%&	64.9	1/8	F	S	P, R	DAL, IRC
RLR05C66R5%&	66.5	1/8	F	S	P, R	DAL, IRC
RLR05C68R0%&	68.0	1/8	G	S	P, R	DAL, IRC

RLR05C68R1%&	68.1	1/8	F	S	P, R	DAL, IRC
RLR05C69R8%&	69.8	1/8	F	S	P, R	DAL, IRC
RLR05C71R5%&	71.5	1/8	F	S	P, R	DAL, IRC
RLR05C73R2%&	73.2	1/8	F	S	P, R	DAL, IRC
RLR05C75R0%&	75.0	1/8	F	S	P, R	DAL, IRC
RLR05C76R8%&	76.8	1/8	F	S	P, R	DAL, IRC
RLR05C78R7%&	78.7	1/8	F	S	P, R	DAL, IRC
RLR05C80R6%&	80.6	1/8	F	S	P, R	DAL, IRC
RLR05C82R0%&	82.0	1/8	G	S	P, R	DAL, IRC
RLR05C82R5%&	82.5	1/8	F	S	P, R	DAL, IRC
RLR05C84R5%&	84.5	1/8	F	S	P, R	DAL, IRC
RLR05C86R7%&	86.7	1/8	F	S	P, R	DAL, IRC
RLR05C88R7%&	88.7	1/8	F	S	P, R	DAL, IRC
RLR05C90R9%&	90.9	1/8	F	S	P, R	DAL, IRC
RLR05C91R0%&	91.0	1/8	G	S	P, R	DAL, IRC
RLR05C93R1%&	93.1	1/8	F	S	P, R	DAL, IRC
RLR05C95R3%&	95.3	1/8	F	S	P, R	DAL, IRC
RLR05C97R6%&	97.6	1/8	F	S	P, R	DAL, IRC
RLR05C1000%&	100	1/8	F, G	S	P, R	DAL, IRC
RLR05C1020%&	102	1/8	F	S	P, R	DAL, IRC
RLR05C1050%&	105	1/8	F	S	P, R	DAL, IRC
RLR05C1070%&	107	1/8	F	S	P, R	DAL, IRC
RLR05C1100%&	110	1/8	F, G	S	P, R	DAL, IRC
RLR05C1130%&	113	1/8	F	S	P, R	DAL, IRC
RLR05C1150%&	115	1/8	F	S	P, R	DAL, IRC
RLR05C1180%&	118	1/8	F	S	P, R	DAL, IRC
RLR05C1200%&	120	1/8	G	S	P, R	DAL, IRC
RLR05C1210%&	121	1/8	F	S	P, R	DAL, IRC
RLR05C1240%&	124	1/8	F	S	P, R	DAL, IRC
RLR05C1270%&	127	1/8	F	S	P, R	DAL, IRC
RLR05C1300%&	130	1/8	F, G	S	P, R	DAL, IRC
RLR05C1330%&	133	1/8	F	S	P, R	DAL, IRC
RLR05C1370%&	137	1/8	F	S	P, R	DAL, IRC
RLR05C1400%&	140	1/8	F	S	P, R	DAL, IRC
RLR05C1430%&	143	1/8	F	S	P, R	DAL, IRC
RLR05C1470%&	147	1/8	F	S	P, R	DAL, IRC
RLR05C1500%&	150	1/8	F, G	S	P, R	DAL, IRC
RLR05C1540%&	154	1/8	F	S	P, R	DAL, IRC
RLR05C1580%&	158	1/8	F	S	P, R	DAL, IRC
RLR05C1600%&	160	1/8	G	S	P, R	DAL, IRC
RLR05C1620%&	162	1/8	F	S	P, R	DAL, IRC
RLR05C1650%&	165	1/8	F	S	P, R	DAL, IRC
RLR05C1690%&	169	1/8	F	S	P, R	DAL, IRC
RLR05C1740%&	174	1/8	F	S	P, R	DAL, IRC
RLR05C1780%&	178	1/8	F	S	P, R	DAL, IRC
RLR05C1800%&	180	1/8	G	S	P, R	DAL, IRC
RLR05C1820%&	182	1/8	F	S	P, R	DAL, IRC

RLR05C1870%&	187	1/8	F	S	P, R	DAL, IRC
RLR05C1910%&	191	1/8	F	S	P, R	DAL, IRC
RLR05C1960%&	196	1/8	F	S	P, R	DAL, IRC
RLR05C2000%&	200	1/8	F, G	S	P, R	DAL, IRC
RLR05C2050%&	205	1/8	F	S	P, R	DAL, IRC
RLR05C2100%&	210	1/8	F	S	P, R	DAL, IRC
RLR05C2150%&	215	1/8	F	S	P, R	DAL, IRC
RLR05C2200%&	220	1/8	G	S	P, R	DAL, IRC
RLR05C2210%&	221	1/8	F	S	P, R	DAL, IRC
RLR05C2260%&	226	1/8	F	S	P, R	DAL, IRC
RLR05C2320%&	232	1/8	F	S	P, R	DAL, IRC
RLR05C2370%&	237	1/8	F	S	P, R	DAL, IRC
RLR05C2400%&	240	1/8	G	S	P, R	DAL, IRC
RLR05C2430%&	243	1/8	F	S	P, R	DAL, IRC
RLR05C2490%&	249	1/8	F	S	P, R	DAL, IRC
RLR05C2550%&	255	1/8	F	S	P, R	DAL, IRC
RLR05C2610%&	261	1/8	F	S	P, R	DAL, IRC
RLR05C2670%&	267	1/8	F	S	P, R	DAL, IRC
RLR05C2700%&	270	1/8	G	S	P, R	DAL, IRC
RLR05C2740%&	274	1/8	F	S	P, R	DAL, IRC
RLR05C2800%&	280	1/8	F	S	P, R	DAL, IRC
RLR05C2870%&	287	1/8	F	S	P, R	DAL, IRC
RLR05C2940%&	294	1/8	F	S	P, R	DAL, IRC
RLR05C3000%&	300	1/8	G	S	P, R	DAL, IRC
RLR05C3010%&	301	1/8	F	S	P, R	DAL, IRC
RLR05C3090%&	309	1/8	F	S	P, R	DAL, IRC
RLR05C3160%&	316	1/8	F	S	P, R	DAL, IRC
RLR05C3240%&	324	1/8	F	S	P, R	DAL, IRC
RLR05C3300%&	330	1/8	G	S	P, R	DAL, IRC
RLR05C3320%&	332	1/8	F	S	P, R	DAL, IRC
RLR05C3400%&	340	1/8	F	S	P, R	DAL, IRC
RLR05C3480%&	348	1/8	F	S	P, R	DAL, IRC
RLR05C3570%&	357	1/8	F	S	P, R	DAL, IRC
RLR05C3600%&	360	1/8	G	S	P, R	DAL, IRC
RLR05C3650%&	365	1/8	F	S	P, R	DAL, IRC
RLR05C3740%&	374	1/8	F	S	P, R	DAL, IRC
RLR05C3830%&	383	1/8	F	S	P, R	DAL, IRC
RLR05C3900%&	390	1/8	G	S	P, R	DAL, IRC
RLR05C3920%&	392	1/8	F	S	P, R	DAL, IRC
RLR05C4020%&	402	1/8	F	S	P, R	DAL, IRC
RLR05C4120%&	412	1/8	F	S	P, R	DAL, IRC
RLR05C4220%&	422	1/8	F	S	P, R	DAL, IRC
RLR05C4300%&	430	1/8	G	S	P, R	DAL, IRC
RLR05C4320%&	432	1/8	F	S	P, R	DAL, IRC
RLR05C4420%&	442	1/8	F	S	P, R	DAL, IRC
RLR05C4530%&	453	1/8	F	S	P, R	DAL, IRC
RLR05C4640%&	464	1/8	F	S	P, R	DAL, IRC

RLR05C4700%&	470	1/8	G	S	P, R	DAL, IRC
RLR05C4750%&	475	1/8	F	S	P, R	DAL, IRC
RLR05C4870%&	487	1/8	F	S	P, R	DAL, IRC
RLR05C4990%&	499	1/8	F	S	P, R	DAL, IRC
RLR05C5100%&	510	1/8	G	S	P, R	DAL, IRC
RLR05C5110%&	511	1/8	F	S	P, R	DAL, IRC
RLR05C5230%&	523	1/8	F	S	P, R	DAL, IRC
RLR05C5360%&	536	1/8	F	S	P, R	DAL, IRC
RLR05C5490%&	549	1/8	F	S	P, R	DAL, IRC
RLR05C5600%&	560	1/8	G	S	P, R	DAL, IRC
RLR05C5620%&	562	1/8	F	S	P, R	DAL, IRC
RLR05C5760%&	576	1/8	F	S	P, R	DAL, IRC
RLR05C5900%&	590	1/8	F	S	P, R	DAL, IRC
RLR05C6040%&	604	1/8	F	S	P, R	DAL, IRC
RLR05C6190%&	619	1/8	F	S	P, R	DAL, IRC
RLR05C6200%&	620	1/8	G	S	P, R	DAL, IRC
RLR05C6340%&	634	1/8	F	S	P, R	DAL, IRC
RLR05C6490%&	649	1/8	F	S	P, R	DAL, IRC
RLR05C6650%&	665	1/8	F	S	P, R	DAL, IRC
RLR05C6800%&	680	1/8	G	S	P, R	DAL, IRC
RLR05C6810%&	681	1/8	F	S	P, R	DAL, IRC
RLR05C6980%&	698	1/8	F	S	P, R	DAL, IRC
RLR05C7150%&	715	1/8	F	S	P, R	DAL, IRC
RLR05C7320%&	732	1/8	F	S	P, R	DAL, IRC
RLR05C7500%&	750	1/8	F	S	P, R	DAL, IRC
RLR05C7680%&	768	1/8	F	S	P, R	DAL, IRC
RLR05C7870%&	787	1/8	F	S	P, R	DAL, IRC
RLR05C8060%&	806	1/8	F	S	P, R	DAL, IRC
RLR05C8200%&	820	1/8	G	S	P, R	DAL, IRC
RLR05C8250%&	825	1/8	F	S	P, R	DAL, IRC
RLR05C8450%&	845	1/8	F	S	P, R	DAL, IRC
RLR05C8670%&	867	1/8	F	S	P, R	DAL, IRC
RLR05C8870%&	887	1/8	F	S	P, R	DAL, IRC
RLR05C9090%&	909	1/8	F	S	P, R	DAL, IRC
RLR05C9100%&	910	1/8	G	S	P, R	DAL, IRC
RLR05C9310%&	931	1/8	F	S	P, R	DAL, IRC
RLR05C9530%&	953	1/8	F	S	P, R	DAL, IRC
RLR05C9760%&	976	1/8	F	S	P, R	DAL, IRC
RLR05C1001%&	1,000	1/8	F, G	S	P, R	DAL, IRC
RLR05C1021%&	1,020	1/8	F	S	P, R	DAL, IRC
RLR05C1051%&	1,050	1/8	F	S	P, R	DAL, IRC
RLR05C1071%&	1,070	1/8	F	S	P, R	DAL, IRC
RLR05C1101%&	1,100	1/8	F, G	S	P, R	DAL, IRC
RLR05C1131%&	1,130	1/8	F	S	P, R	DAL, IRC
RLR05C1151%&	1,150	1/8	F	S	P, R	DAL, IRC
RLR05C1181%&	1,180	1/8	F	S	P, R	DAL, IRC
RLR05C1201%&	1,200	1/8	G	S	P, R	DAL, IRC

RLR05C1211%&	1,210	1/8	F	S	P, R	DAL, IRC
RLR05C1241%&	1,240	1/8	F	S	P, R	DAL, IRC
RLR05C1271%&	1,270	1/8	F	S	P, R	DAL, IRC
RLR05C1301%&	1,300	1/8	F, G	S	P, R	DAL, IRC
RLR05C1331%&	1,330	1/8	F	S	P, R	DAL, IRC
RLR05C1371%&	1,370	1/8	F	S	P, R	DAL, IRC
RLR05C1401%&	1,400	1/8	F	S	P, R	DAL, IRC
RLR05C1431%&	1,430	1/8	F	S	P, R	DAL, IRC
RLR05C1471%&	1,470	1/8	F	S	P, R	DAL, IRC
RLR05C1501%&	1,500	1/8	F, G	S	P, R	DAL, IRC
RLR05C1541%&	1,540	1/8	F	S	P, R	DAL, IRC
RLR05C1581%&	1,580	1/8	F	S	P, R	DAL, IRC
RLR05C1601%&	1,600	1/8	G	S	P, R	DAL, IRC
RLR05C1621%&	1,620	1/8	F	S	P, R	DAL, IRC
RLR05C1651%&	1,650	1/8	F	S	P, R	DAL, IRC
RLR05C1691%&	1,690	1/8	F	S	P, R	DAL, IRC
RLR05C1741%&	1,740	1/8	F	S	P, R	DAL, IRC
RLR05C1781%&	1,780	1/8	F	S	P, R	DAL, IRC
RLR05C1801%&	1,800	1/8	G	S	P, R	DAL, IRC
RLR05C1821%&	1,820	1/8	F	S	P, R	DAL, IRC
RLR05C1871%&	1,870	1/8	F	S	P, R	DAL, IRC
RLR05C1911%&	1,910	1/8	F	S	P, R	DAL, IRC
RLR05C1961%&	1,960	1/8	F	S	P, R	DAL, IRC
RLR05C2001%&	2,000	1/8	F, G	S	P, R	DAL, IRC
RLR05C2051%&	2,050	1/8	F	S	P, R	DAL, IRC
RLR05C2101%&	2,100	1/8	F	S	P, R	DAL, IRC
RLR05C2151%&	2,150	1/8	F	S	P, R	DAL, IRC
RLR05C2201%&	2,200	1/8	G	S	P, R	DAL, IRC
RLR05C2211%&	2,210	1/8	F	S	P, R	DAL, IRC
RLR05C2261%&	2,260	1/8	F	S	P, R	DAL, IRC
RLR05C2321%&	2,320	1/8	F	S	P, R	DAL, IRC
RLR05C2371%&	2,370	1/8	F	S	P, R	DAL, IRC
RLR05C2401%&	2,400	1/8	G	S	P, R	DAL, IRC
RLR05C2431%&	2,430	1/8	F	S	P, R	DAL, IRC
RLR05C2491%&	2,490	1/8	F	S	P, R	DAL, IRC
RLR05C2551%&	2,550	1/8	F	S	P, R	DAL, IRC
RLR05C2611%&	2,610	1/8	F	S	P, R	DAL, IRC
RLR05C2671%&	2,670	1/8	F	S	P, R	DAL, IRC
RLR05C2701%&	2,700	1/8	G	S	P, R	DAL, IRC
RLR05C2741%&	2,740	1/8	F	S	P, R	DAL, IRC
RLR05C2801%&	2,800	1/8	F	S	P, R	DAL, IRC
RLR05C2871%&	2,870	1/8	F	S	P, R	DAL, IRC
RLR05C2941%&	2,940	1/8	F	S	P, R	DAL, IRC
RLR05C3001%&	3,000	1/8	G	S	P, R	DAL, IRC
RLR05C3011%&	3,010	1/8	F	S	P, R	DAL, IRC
RLR05C3091%&	3,090	1/8	F	S	P, R	DAL, IRC
RLR05C3161%&	3,160	1/8	F	S	P, R	DAL, IRC

RLR05C3241%&	3,240	1/8	F	S	P, R	DAL, IRC
RLR05C3301%&	3,300	1/8	G	S	P, R	DAL, IRC
RLR05C3321%&	3,320	1/8	F	S	P, R	DAL, IRC
RLR05C3401%&	3,400	1/8	F	S	P, R	DAL, IRC
RLR05C3481%&	3,480	1/8	F	S	P, R	DAL, IRC
RLR05C3571%&	3,570	1/8	F	S	P, R	DAL, IRC
RLR05C3601%&	3,600	1/8	G	S	P, R	DAL, IRC
RLR05C3651%&	3,650	1/8	F	S	P, R	DAL, IRC
RLR05C3741%&	3,740	1/8	F	S	P, R	DAL, IRC
RLR05C3831%&	3,830	1/8	F	S	P, R	DAL, IRC
RLR05C3901%&	3,900	1/8	G	S	P, R	DAL, IRC
RLR05C3921%&	3,920	1/8	F	S	P, R	DAL, IRC
RLR05C4021%&	4,020	1/8	F	S	P, R	DAL, IRC
RLR05C4121%&	4,120	1/8	F	S	P, R	DAL, IRC
RLR05C4221%&	4,220	1/8	F	S	P, R	DAL, IRC
RLR05C4301%&	4,300	1/8	G	S	P, R	DAL, IRC
RLR05C4321%&	4,320	1/8	F	S	P, R	DAL, IRC
RLR05C4421%&	4,420	1/8	F	S	P, R	DAL, IRC
RLR05C4531%&	4,530	1/8	F	S	P, R	DAL, IRC
RLR05C4641%&	4,640	1/8	F	S	P, R	DAL, IRC
RLR05C4701%&	4,700	1/8	G	S	P, R	DAL, IRC
RLR05C4751%&	4,750	1/8	F	S	P, R	DAL, IRC
RLR05C4871%&	4,870	1/8	F	S	P, R	DAL, IRC
RLR05C4991%&	4,990	1/8	F	S	P, R	DAL, IRC
RLR05C5101%&	5,100	1/8	G	S	P, R	DAL, IRC
RLR05C5111%&	5,110	1/8	F	S	P, R	DAL, IRC
RLR05C5231%&	5,230	1/8	F	S	P, R	DAL, IRC
RLR05C5361%&	5,360	1/8	F	S	P, R	DAL, IRC
RLR05C5491%&	5,490	1/8	F	S	P, R	DAL, IRC
RLR05C5601%&	5,600	1/8	G	S	P, R	DAL, IRC
RLR05C5621%&	5,620	1/8	F	S	P, R	DAL, IRC
RLR05C5761%&	5,760	1/8	F	S	P, R	DAL, IRC
RLR05C5901%&	5,900	1/8	F	S	P, R	DAL, IRC
RLR05C6041%&	6,040	1/8	F	S	P, R	DAL, IRC
RLR05C6191%&	6,190	1/8	F	S	P, R	DAL, IRC
RLR05C6201%&	6,200	1/8	G	S	P, R	DAL, IRC
RLR05C6341%&	6,340	1/8	F	S	P, R	DAL, IRC
RLR05C6491%&	6,490	1/8	F	S	P, R	DAL, IRC
RLR05C6651%&	6,650	1/8	F	S	P, R	DAL, IRC
RLR05C6801%&	6,800	1/8	G	S	P, R	DAL, IRC
RLR05C6811%&	6,810	1/8	F	S	P, R	DAL, IRC
RLR05C6981%&	6,980	1/8	F	S	P, R	DAL, IRC
RLR05C7151%&	7,150	1/8	F	S	P, R	DAL, IRC
RLR05C7321%&	7,320	1/8	F	S	P, R	DAL, IRC
RLR05C7501%&	7,500	1/8	F	S	P, R	DAL, IRC
RLR05C7681%&	7,680	1/8	F	S	P, R	DAL, IRC
RLR05C7871%&	7,870	1/8	F	S	P, R	DAL, IRC

RLR05C8061%&	8,060	1/8	F	S	P, R	DAL, IRC
RLR05C8201%&	8,200	1/8	G	S	P, R	DAL, IRC
RLR05C8251%&	8,250	1/8	F	S	P, R	DAL, IRC
RLR05C8451%&	8,450	1/8	F	S	P, R	DAL, IRC
RLR05C8671%&	8,670	1/8	F	S	P, R	DAL, IRC
RLR05C8871%&	8,870	1/8	F	S	P, R	DAL, IRC
RLR05C9091%&	9,090	1/8	F	S	P, R	DAL, IRC
RLR05C9101%&	9,100	1/8	G	S	P, R	DAL, IRC
RLR05C9311%&	9,310	1/8	F	S	P, R	DAL, IRC
RLR05C9531%&	9,530	1/8	F	S	P, R	DAL, IRC
RLR05C9761%&	9,760	1/8	F	S	P, R	DAL, IRC
RLR05C1002%&	10,000	1/8	F, G	S	P, R	DAL, IRC
RLR05C1022%&	10,200	1/8	F	S	P, R	DAL, IRC
RLR05C1052%&	10,500	1/8	F	S	P, R	DAL, IRC
RLR05C1072%&	10,700	1/8	F	S	P, R	DAL, IRC
RLR05C1102%&	11,000	1/8	F, G	S	P, R	DAL, IRC
RLR05C1132%&	11,300	1/8	F	S	P, R	DAL, IRC
RLR05C1152%&	11,500	1/8	F	S	P, R	DAL, IRC
RLR05C1182%&	11,800	1/8	F	S	P, R	DAL, IRC
RLR05C1202%&	12,000	1/8	G	S	P, R	DAL, IRC
RLR05C1212%&	12,100	1/8	F	S	P, R	DAL, IRC
RLR05C1242%&	12,400	1/8	F	S	P, R	DAL, IRC
RLR05C1272%&	12,700	1/8	F	S	P, R	DAL, IRC
RLR05C1302%&	13,000	1/8	F, G	S	P, R	DAL, IRC
RLR05C1332%&	13,300	1/8	F	S	P, R	DAL, IRC
RLR05C1372%&	13,700	1/8	F	S	P, R	DAL, IRC
RLR05C1402%&	14,000	1/8	F	S	P, R	DAL, IRC
RLR05C1432%&	14,300	1/8	F	S	P, R	DAL, IRC
RLR05C1472%&	14,700	1/8	F	S	P, R	DAL, IRC
RLR05C1502%&	15,000	1/8	F, G	S	P, R	DAL, IRC
RLR05C1542%&	15,400	1/8	F	S	P, R	DAL, IRC
RLR05C1582%&	15,800	1/8	F	S	P, R	DAL, IRC
RLR05C1602%&	16,000	1/8	G	S	P, R	DAL, IRC
RLR05C1622%&	16,200	1/8	F	S	P, R	DAL, IRC
RLR05C1652%&	16,500	1/8	F	S	P, R	DAL, IRC
RLR05C1692%&	16,900	1/8	F	S	P, R	DAL, IRC
RLR05C1742%&	17,400	1/8	F	S	P, R	DAL, IRC
RLR05C1782%&	17,800	1/8	F	S	P, R	DAL, IRC
RLR05C1802%&	18,000	1/8	G	S	P, R	DAL, IRC
RLR05C1822%&	18,200	1/8	F	S	P, R	DAL, IRC
RLR05C1872%&	18,700	1/8	F	S	P, R	DAL, IRC
RLR05C1912%&	19,100	1/8	F	S	P, R	DAL, IRC
RLR05C1962%&	19,600	1/8	F	S	P, R	DAL, IRC
RLR05C2002%&	20,000	1/8	F, G	S	P, R	DAL, IRC
RLR05C2052%&	20,500	1/8	F	S	P, R	DAL, IRC
RLR05C2102%&	21,000	1/8	F	S	P, R	DAL, IRC
RLR05C2152%&	21,500	1/8	F	S	P, R	DAL, IRC

RLR05C2202%&	22,000	1/8	G	S	P, R	DAL, IRC
RLR05C2212%&	22,100	1/8	F	S	P, R	DAL, IRC
RLR05C2262%&	22,600	1/8	F	S	P, R	DAL, IRC
RLR05C2322%&	23,200	1/8	F	S	P, R	DAL, IRC
RLR05C2372%&	23,700	1/8	F	S	P, R	DAL, IRC
RLR05C2402%&	24,000	1/8	G	S	P, R	DAL, IRC
RLR05C2432%&	24,300	1/8	F	S	P, R	DAL, IRC
RLR05C2492%&	24,900	1/8	F	S	P, R	DAL, IRC
RLR05C2552%&	25,500	1/8	F	S	P, R	DAL, IRC
RLR05C2612%&	26,100	1/8	F	S	P, R	DAL, IRC
RLR05C2672%&	26,700	1/8	F	S	P, R	DAL, IRC
RLR05C2702%&	27,000	1/8	G	S	P, R	DAL, IRC
RLR05C2742%&	27,400	1/8	F	S	P, R	DAL, IRC
RLR05C2802%&	28,000	1/8	F	S	P, R	DAL, IRC
RLR05C2872%&	28,700	1/8	F	S	P, R	DAL, IRC
RLR05C2942%&	29,400	1/8	F	S	P, R	DAL, IRC
RLR05C3002%&	30,000	1/8	G	S	P, R	DAL, IRC
RLR05C3012%&	30,100	1/8	F	S	P, R	DAL, IRC
RLR05C3092%&	30,900	1/8	F	S	P, R	DAL, IRC
RLR05C3162%&	31,600	1/8	F	S	P, R	DAL, IRC
RLR05C3242%&	32,400	1/8	F	S	P, R	DAL, IRC
RLR05C3302%&	33,000	1/8	G	S	P, R	DAL, IRC
RLR05C3322%&	33,200	1/8	F	S	P, R	DAL, IRC
RLR05C3402%&	34,000	1/8	F	S	P, R	DAL, IRC
RLR05C3482%&	34,800	1/8	F	S	P, R	DAL, IRC
RLR05C3572%&	35,700	1/8	F	S	P, R	DAL, IRC
RLR05C3602%&	36,000	1/8	G	S	P, R	DAL, IRC
RLR05C3652%&	36,500	1/8	F	S	P, R	DAL, IRC
RLR05C3742%&	37,400	1/8	F	S	P, R	DAL, IRC
RLR05C3832%&	38,300	1/8	F	S	P, R	DAL, IRC
RLR05C3902%&	39,000	1/8	G	S	P, R	DAL, IRC
RLR05C3922%&	39,200	1/8	F	S	P, R	DAL, IRC
RLR05C4022%&	40,200	1/8	F	S	P, R	DAL, IRC
RLR05C4122%&	41,200	1/8	F	S	P, R	DAL, IRC
RLR05C4222%&	42,200	1/8	F	S	P, R	DAL, IRC
RLR05C4302%&	43,000	1/8	G	S	P, R	DAL, IRC
RLR05C4322%&	43,200	1/8	F	S	P, R	DAL, IRC
RLR05C4422%&	44,200	1/8	F	S	P, R	DAL, IRC
RLR05C4532%&	45,300	1/8	F	S	P, R	DAL, IRC
RLR05C4642%&	46,400	1/8	F	S	P, R	DAL, IRC
RLR05C4702%&	47,000	1/8	G	S	P, R	DAL, IRC
RLR05C4752%&	47,500	1/8	F	S	P, R	DAL, IRC
RLR05C4872%&	48,700	1/8	F	S	P, R	DAL, IRC
RLR05C4992%&	49,900	1/8	F	S	P, R	DAL, IRC
RLR05C5102%&	51,000	1/8	G	S	P, R	DAL, IRC
RLR05C5112%&	51,100	1/8	F	S	P, R	DAL, IRC
RLR05C5232%&	52,300	1/8	F	S	P, R	DAL, IRC

RLR05C5362%&	53,600	1/8	F	S	P, R	DAL, IRC
RLR05C5492%&	54,900	1/8	F	S	P, R	DAL, IRC
RLR05C5602%&	56,000	1/8	G	S	P, R	DAL, IRC
RLR05C5622%&	56,200	1/8	F	S	P, R	DAL, IRC
RLR05C5762%&	57,600	1/8	F	S	P, R	DAL, IRC
RLR05C5902%&	59,000	1/8	F	S	P, R	DAL, IRC
RLR05C6042%&	60,400	1/8	F	S	P, R	DAL, IRC
RLR05C6192%&	61,900	1/8	F	S	P, R	DAL, IRC
RLR05C6202%&	62,000	1/8	G	S	P, R	DAL, IRC
RLR05C6342%&	63,400	1/8	F	S	P, R	DAL, IRC
RLR05C6492%&	64,900	1/8	F	S	P, R	DAL, IRC
RLR05C6652%&	66,500	1/8	F	S	P, R	DAL, IRC
RLR05C6802%&	68,000	1/8	G	S	P, R	DAL, IRC
RLR05C6812%&	68,100	1/8	F	S	P, R	DAL, IRC
RLR05C6982%&	69,800	1/8	F	S	P, R	DAL, IRC
RLR05C7152%&	71,500	1/8	F	S	P, R	DAL, IRC
RLR05C7322%&	73,200	1/8	F	S	P, R	DAL, IRC
RLR05C7502%&	75,000	1/8	F	S	P, R	DAL, IRC
RLR05C7682%&	76,800	1/8	F	S	P, R	DAL, IRC
RLR05C7872%&	78,700	1/8	F	S	P, R	DAL, IRC
RLR05C8062%&	80,600	1/8	F	S	P, R	DAL, IRC
RLR05C8202%&	82,000	1/8	G	S	P, R	DAL, IRC
RLR05C8252%&	82,500	1/8	F	S	P, R	DAL, IRC
RLR05C8452%&	84,500	1/8	F	S	P, R	DAL, IRC
RLR05C8672%&	86,700	1/8	F	S	P, R	DAL, IRC
RLR05C8872%&	88,700	1/8	F	S	P, R	DAL, IRC
RLR05C9092%&	90,900	1/8	F	S	P, R	DAL, IRC
RLR05C9102%&	91,000	1/8	G	S	P, R	DAL, IRC
RLR05C9312%&	93,100	1/8	F	S	P, R	DAL, IRC
RLR05C9532%&	95,300	1/8	F	S	P, R	DAL, IRC
RLR05C9762%&	97,600	1/8	F	S	P, R	DAL, IRC
RLR05C1003%&	100,000	1/8	F, G	S	P, R	DAL, IRC
RLR05C1023%&	102,000	1/8	F	S	P, R	DAL, IRC
RLR05C1053%&	105,000	1/8	F	S	P, R	DAL, IRC
RLR05C1073%&	107,000	1/8	F	S	P, R	DAL, IRC
RLR05C1103%&	110,000	1/8	F, G	S	P, R	DAL, IRC
RLR05C1133%&	113,000	1/8	F	S	P, R	DAL, IRC
RLR05C1153%&	115,000	1/8	F	S	P, R	DAL, IRC
RLR05C1183%&	118,000	1/8	F	S	P, R	DAL, IRC
RLR05C1203%&	120,000	1/8	G	S	P, R	DAL, IRC
RLR05C1213%&	121,000	1/8	F	S	P, R	DAL, IRC
RLR05C1243%&	124,000	1/8	F	S	P, R	DAL, IRC
RLR05C1273%&	127,000	1/8	F	S	P, R	DAL, IRC
RLR05C1303%&	130,000	1/8	F, G	S	P, R	DAL, IRC
RLR05C1333%&	133,000	1/8	F	S	P, R	DAL, IRC
RLR05C1373%&	137,000	1/8	F	S	P, R	DAL, IRC
RLR05C1403%&	140,000	1/8	F	S	P, R	DAL, IRC

RLR05C1433%&	143,000	1/8	F	S	P, R	DAL, IRC
RLR05C1473%&	147,000	1/8	F	S	P, R	DAL, IRC
RLR05C1503%&	150,000	1/8	F, G	S	P, R	DAL, IRC
RLR05C1543%&	154,000	1/8	F	S	P, R	DAL, IRC
RLR05C1583%&	158,000	1/8	F	S	P, R	DAL, IRC
RLR05C1603%&	160,000	1/8	G	S	P, R	DAL, IRC
RLR05C1623%&	162,000	1/8	F	S	P, R	DAL, IRC
RLR05C1653%&	165,000	1/8	F	S	P, R	DAL, IRC
RLR05C1693%&	169,000	1/8	F	S	P, R	DAL, IRC
RLR05C1743%&	174,000	1/8	F	S	P, R	DAL, IRC
RLR05C1783%&	178,000	1/8	F	S	P, R	DAL, IRC
RLR05C1803%&	180,000	1/8	G	S	P, R	DAL, IRC
RLR05C1823%&	182,000	1/8	F	S	P, R	DAL, IRC
RLR05C1873%&	187,000	1/8	F	S	P, R	DAL, IRC
RLR05C1913%&	191,000	1/8	F	S	P, R	DAL, IRC
RLR05C1963%&	196,000	1/8	F	S	P, R	DAL, IRC
RLR05C2003%&	200,000	1/8	F, G	S	P, R	DAL, IRC
RLR05C2053%&	205,000	1/8	F	S	P, R	DAL, IRC
RLR05C2103%&	210,000	1/8	F	S	P, R	DAL, IRC
RLR05C2153%&	215,000	1/8	F	S	P, R	DAL, IRC
RLR05C2203%&	220,000	1/8	G	S	P, R	DAL, IRC
RLR05C2213%&	221,000	1/8	F	S	P, R	DAL, IRC
RLR05C2263%&	226,000	1/8	F	S	P, R	DAL, IRC
RLR05C2323%&	232,000	1/8	F	S	P, R	DAL, IRC
RLR05C2373%&	237,000	1/8	F	S	P, R	DAL, IRC
RLR05C2403%&	240,000	1/8	G	S	P, R	DAL, IRC
RLR05C2433%&	243,000	1/8	F	S	P, R	DAL, IRC
RLR05C2493%&	249,000	1/8	F	S	P, R	DAL, IRC
RLR05C2553%&	255,000	1/8	F	S	P, R	DAL, IRC
RLR05C2613%&	261,000	1/8	F	S	P, R	DAL, IRC
RLR05C2673%&	267,000	1/8	F	S	P, R	DAL, IRC
RLR05C2703%&	270,000	1/8	G	S	P, R	DAL, IRC
RLR05C2743%&	274,000	1/8	F	S	P, R	DAL, IRC
RLR05C2803%&	280,000	1/8	F	S	P, R	DAL, IRC
RLR05C2873%&	287,000	1/8	F	S	P, R	DAL, IRC
RLR05C2943%&	294,000	1/8	F	S	P, R	DAL, IRC
RLR05C3003%&	300,000	1/8	G	S	P, R	DAL, IRC
RLR05C3013%&	301,000	1/8	F	S	P, R	DAL, IRC
RLR05C3093%&	309,000	1/8	F	-	P, R	DAL
RLR05C3163%&	316,000	1/8	F	-	P, R	DAL
RLR05C3243%&	324,000	1/8	F	-	P, R	DAL
RLR05C3303%&	330,000	1/8	G	-	P, R	DAL
RLR05C3323%&	332,000	1/8	F	-	P, R	DAL
RLR05C3403%&	340,000	1/8	F	-	P, R	DAL
RLR05C3483%&	348,000	1/8	F	-	P, R	DAL
RLR05C3573%&	357,000	1/8	F	-	P, R	DAL
RLR05C3603%&	360,000	1/8	G	-	P, R	DAL

RLR05C3653%&	365,000	1/8	F	-	P, R	DAL
RLR05C3743%&	374,000	1/8	F	-	P, R	DAL
RLR05C3833%&	383,000	1/8	F	-	P, R	DAL
RLR05C3903%&	390,000	1/8	G	-	P, R	DAL
RLR05C3923%&	392,000	1/8	F	-	P, R	DAL
RLR05C4023%&	402,000	1/8	F	-	P, R	DAL
RLR05C4123%&	412,000	1/8	F	-	P, R	DAL
RLR05C4223%&	422,000	1/8	F	-	P, R	DAL
RLR05C4303%&	430,000	1/8	G	-	P, R	DAL
RLR05C4323%&	432,000	1/8	F	-	P, R	DAL
RLR05C4423%&	442,000	1/8	F	-	P, R	DAL
RLR05C4533%&	453,000	1/8	F	-	P, R	DAL
RLR05C4643%&	464,000	1/8	F	-	P, R	DAL
RLR05C4703%&	470,000	1/8	G	-	P, R	DAL
RLR05C4753%&	475,000	1/8	F	-	P, R	DAL
RLR05C4873%&	487,000	1/8	F	-	P, R	DAL
RLR05C4993%&	499,000	1/8	F	-	P, R	DAL
RLR05C5103%&	510,000	1/8	G	-	P, R	DAL
RLR05C5113%&	511,000	1/8	F	-	P, R	DAL
RLR05C5233%&	523,000	1/8	F	-	P, R	DAL
RLR05C5363%&	536,000	1/8	F	-	P, R	DAL
RLR05C5493%&	549,000	1/8	F	-	P, R	DAL
RLR05C5603%&	560,000	1/8	G	-	P, R	DAL
RLR05C5623%&	562,000	1/8	F	-	P, R	DAL
RLR05C5763%&	576,000	1/8	F	-	P, R	DAL
RLR05C5903%&	590,000	1/8	F	-	P, R	DAL
RLR05C6043%&	604,000	1/8	F	-	P, R	DAL
RLR05C6193%&	619,000	1/8	F	-	P, R	DAL
RLR05C6203%&	620,000	1/8	G	-	P, R	DAL
RLR05C6343%&	634,000	1/8	F	-	P, R	DAL
RLR05C6493%&	649,000	1/8	F	-	P, R	DAL
RLR05C6653%&	665,000	1/8	F	-	P, R	DAL
RLR05C6803%&	680,000	1/8	G	-	P, R	DAL
RLR05C6813%&	681,000	1/8	F	-	P, R	DAL
RLR05C6983%&	698,000	1/8	F	-	P, R	DAL
RLR05C7153%&	715,000	1/8	F	-	P, R	DAL
RLR05C7323%&	732,000	1/8	F	-	P, R	DAL
RLR05C7503%&	750,000	1/8	F	-	P, R	DAL
RLR05C7683%&	768,000	1/8	F	-	P, R	DAL
RLR05C7873%&	787,000	1/8	F	-	P, R	DAL
RLR05C8063%&	806,000	1/8	F	-	P, R	DAL
RLR05C8203%&	820,000	1/8	G	-	P, R	DAL
RLR05C8253%&	825,000	1/8	F	-	P, R	DAL
RLR05C8453%&	845,000	1/8	F	-	P, R	DAL
RLR05C8673%&	867,000	1/8	F	-	P, R	DAL
RLR05C8873%&	887,000	1/8	F	-	P, R	DAL
RLR05C9093%&	909,000	1/8	F	-	P, R	DAL

RLR05C9103%&	910,000	1/8	G	-	P, R	DAL
RLR05C9313%&	931,000	1/8	F	-	P, R	DAL
RLR05C9533%&	953,000	1/8	F	-	P, R	DAL
RLR05C9763%&	976,000	1/8	F	-	P, R	DAL
RLR05C1004%&	1,000,000	1/8	F, G	-	P, R	DAL

RLR05 RESISTORS DECADE BREAKDOWN

Click on the link below to see the associated parts selection listing:

Resistance Range
4.70 Ohms through 9.76 Ohms
10.0 Ohms through 97.6 Ohms
100 Ohms through 976 Ohms
1,000 Ohms through 9,760 Ohms
10,000 Ohms through 97,600 Ohms
100,000 Ohms through 1,000,000 Ohms

RLR05C4R70%&	4.70	1/8	G	S	P, R	DAL
RLR05C4R75%&	4.75	1/8	F	S	P, R	DAL
RLR05C4R87%&	4.87	1/8	F	S	P, R	DAL
RLR05C4R99%&	4.99	1/8	F	S	P, R	DAL
RLR05C5R10%&	5.10	1/8	G	S	P, R	DAL
RLR05C5R11%&	5.11	1/8	F	S	P, R	DAL
RLR05C5R23%&	5.23	1/8	F	S	P, R	DAL
RLR05C5R36%&	5.36	1/8	F	S	P, R	DAL
RLR05C5R49%&	5.49	1/8	F	S	P, R	DAL
RLR05C5R60%&	5.60	1/8	G	S	P, R	DAL
RLR05C5R62%&	5.62	1/8	F	S	P, R	DAL
RLR05C5R76%&	5.76	1/8	F	S	P, R	DAL
RLR05C5R90%&	5.90	1/8	F	S	P, R	DAL
RLR05C6R04%&	6.04	1/8	F	S	P, R	DAL
RLR05C6R19%&	6.19	1/8	F	S	P, R	DAL
RLR05C6R20%&	6.20	1/8	G	S	P, R	DAL
RLR05C6R34%&	6.34	1/8	F	S	P, R	DAL
RLR05C6R49%&	6.49	1/8	F	S	P, R	DAL
RLR05C6R65%&	6.65	1/8	F	S	P, R	DAL
RLR05C6R80%&	6.80	1/8	G	S	P, R	DAL
RLR05C6R81%&	6.81	1/8	F	S	P, R	DAL
RLR05C6R98%&	6.98	1/8	F	S	P, R	DAL
RLR05C7R15%&	7.15	1/8	F	S	P, R	DAL
RLR05C7R32%&	7.32	1/8	F	S	P, R	DAL
RLR05C7R50%&	7.50	1/8	F	S	P, R	DAL
RLR05C7R68%&	7.68	1/8	F	S	P, R	DAL

RLR05C7R87%&	7.87	1/8	F	S	P, R	DAL
RLR05C8R06%&	8.06	1/8	F	S	P, R	DAL
RLR05C8R20%&	8.20	1/8	G	S	P, R	DAL
RLR05C8R25%&	8.25	1/8	F	S	P, R	DAL
RLR05C8R45%&	8.45	1/8	F	S	P, R	DAL
RLR05C8R67%&	8.67	1/8	F	S	P, R	DAL
RLR05C8R87%&	8.87	1/8	F	S	P, R	DAL
RLR05C9R09%&	9.09	1/8	F	S	P, R	DAL
RLR05C9R10%&	9.10	1/8	G	S	P, R	DAL
RLR05C9R31%&	9.31	1/8	F	S	P, R	DAL
RLR05C9R53%&	9.53	1/8	F	S	P, R	DAL
RLR05C9R76%&	9.76	1/8	F	S	P, R	DAL

RLR05 Film Resistors: 4.70 Ohms through 9.76 Ohms

	Resistance	Power	Resistance	Level 1	Level 2	
Part Number	Value (Ohms)	Rating (W)	Tolerance (%)	(FRL)(&)	(FRL)(&)	Manufacturer

RLR05C10R0%&	10.0	1/8	F, G	S	P, R	DAL, IRC
RLR05C10R2%&	10.2	1/8	F	S	P, R	DAL, IRC
RLR05C10R5%&	10.5	1/8	F	S	P, R	DAL, IRC
RLR05C10R7%&	10.7	1/8	F	S	P, R	DAL, IRC
RLR05C11R0%&	11.0	1/8	F, G	S	P, R	DAL, IRC
RLR05C11R3%&	11.3	1/8	F	S	P, R	DAL, IRC
RLR05C11R5%&	11.5	1/8	F	S	P, R	DAL, IRC
RLR05C11R8%&	11.8	1/8	F	S	P, R	DAL, IRC
RLR05C12R0%&	12.0	1/8	G	S	P, R	DAL, IRC
RLR05C12R1%&	12.1	1/8	F	S	P, R	DAL, IRC
RLR05C12R4%&	12.4	1/8	F	S	P, R	DAL, IRC
RLR05C12R7%&	12.7	1/8	F	S	P, R	DAL, IRC
RLR05C13R0%&	13.0	1/8	F, G	S	P, R	DAL, IRC
RLR05C13R3%&	13.3	1/8	F	S	P, R	DAL, IRC
RLR05C13R7%&	13.7	1/8	F	S	P, R	DAL, IRC
RLR05C14R0%&	14.0	1/8	F	S	P, R	DAL, IRC
RLR05C14R3%&	14.3	1/8	F	S	P, R	DAL, IRC
RLR05C14R7%&	14.7	1/8	F	S	P, R	DAL, IRC
RLR05C15R0%&	15.0	1/8	F, G	S	P, R	DAL, IRC
RLR05C15R4%&	15.4	1/8	F	S	P, R	DAL, IRC
RLR05C15R8%&	15.8	1/8	F	S	P, R	DAL, IRC
RLR05C16R0%&	16.0	1/8	G	S	P, R	DAL, IRC
RLR05C16R2%&	16.2	1/8	F	S	P, R	DAL, IRC
RLR05C16R5%&	16.5	1/8	F	S	P, R	DAL, IRC
RLR05C16R9%&	16.9	1/8	F	S	P, R	DAL, IRC

RLR05C17R4%&	17.4	1/8	F	S	P, R	DAL, IRC
RLR05C17R8%&	17.8	1/8	F	S	P, R	DAL, IRC
RLR05C18R0%&	18.0	1/8	G	S	P, R	DAL, IRC
RLR05C18R2%&	18.2	1/8	F	S	P, R	DAL, IRC
RLR05C18R7%&	18.7	1/8	F	S	P, R	DAL, IRC
RLR05C19R1%&	19.1	1/8	F	S	P, R	DAL, IRC
RLR05C19R6%&	19.6	1/8	F	S	P, R	DAL, IRC
RLR05C20R0%&	20.0	1/8	F, G	S	P, R	DAL, IRC
RLR05C20R5%&	20.5	1/8	F	S	P, R	DAL, IRC
RLR05C21R0%&	21.0	1/8	F	S	P, R	DAL, IRC
RLR05C21R5%&	21.5	1/8	F	S	P, R	DAL, IRC
RLR05C22R0%&	22.0	1/8	G	S	P, R	DAL, IRC
RLR05C22R1%&	22.1	1/8	F	S	P, R	DAL, IRC
RLR05C22R6%&	22.6	1/8	F	S	P, R	DAL, IRC
RLR05C23R2%&	23.2	1/8	F	S	P, R	DAL, IRC
RLR05C23R7%&	23.7	1/8	F	S	P, R	DAL, IRC
RLR05C24R0%&	24.0	1/8	G	S	P, R	DAL, IRC
RLR05C24R3%&	24.3	1/8	F	S	P, R	DAL, IRC
RLR05C24R9%&	24.9	1/8	F	S	P, R	DAL, IRC
RLR05C25R5%&	25.5	1/8	F	S	P, R	DAL, IRC
RLR05C26R1%&	26.1	1/8	F	S	P, R	DAL, IRC
RLR05C26R7%&	26.7	1/8	F	S	P, R	DAL, IRC
RLR05C27R0%&	27.0	1/8	G	S	P, R	DAL, IRC
RLR05C27R4%&	27.4	1/8	F	S	P, R	DAL, IRC
RLR05C28R0%&	28.0	1/8	F	S	P, R	DAL, IRC
RLR05C28R7%&	28.7	1/8	F	S	P, R	DAL, IRC
RLR05C29R4%&	29.4	1/8	F	S	P, R	DAL, IRC
RLR05C30R0%&	30.0	1/8	G	S	P, R	DAL, IRC
RLR05C30R1%&	30.1	1/8	F	S	P, R	DAL, IRC
RLR05C30R9%&	30.9	1/8	F	S	P, R	DAL, IRC
RLR05C31R6%&	31.6	1/8	F	S	P, R	DAL, IRC
RLR05C32R4%&	32.4	1/8	F	S	P, R	DAL, IRC
RLR05C33R0%&	33.0	1/8	G	S	P, R	DAL, IRC
RLR05C33R2%&	33.2	1/8	F	S	P, R	DAL, IRC
RLR05C34R0%&	34.0	1/8	F	S	P, R	DAL, IRC
RLR05C34R8%&	34.8	1/8	F	S	P, R	DAL, IRC
RLR05C35R7%&	35.7	1/8	F	S	P, R	DAL, IRC
RLR05C36R0%&	36.0	1/8	G	S	P, R	DAL, IRC
RLR05C36R5%&	36.5	1/8	F	S	P, R	DAL, IRC
RLR05C37R4%&	37.4	1/8	F	S	P, R	DAL, IRC
RLR05C38R3%&	38.3	1/8	F	S	P, R	DAL, IRC
RLR05C39R0%&	39.0	1/8	G	S	P, R	DAL, IRC
RLR05C39R2%&	39.2	1/8	F	S	P, R	DAL, IRC
RLR05C40R2%&	40.2	1/8	F	S	P, R	DAL, IRC
RLR05C41R2%&	41.2	1/8	F	S	P, R	DAL, IRC
RLR05C42R2%&	42.2	1/8	F	S	P, R	DAL, IRC
RLR05C43R0%&	43.0	1/8	G	S	P, R	DAL, IRC

RLR05C43R2%&	43.2	1/8	F	S	P, R	DAL, IRC
RLR05C44R2%&	44.2	1/8	F	S	P, R	DAL, IRC
RLR05C45R3%&	45.3	1/8	F	S	P, R	DAL, IRC
RLR05C46R4%&	46.4	1/8	F	S	P, R	DAL, IRC
RLR05C47R0%&	47.0	1/8	G	S	P, R	DAL, IRC
RLR05C47R5%&	47.5	1/8	F	S	P, R	DAL, IRC
RLR05C48R7%&	48.7	1/8	F	S	P, R	DAL, IRC
RLR05C49R9%&	49.9	1/8	F	S	P, R	DAL, IRC
RLR05C51R0%&	51.0	1/8	G	S	P, R	DAL, IRC
RLR05C51R1%&	51.1	1/8	F	S	P, R	DAL, IRC
RLR05C52R3%&	52.3	1/8	F	S	P, R	DAL, IRC
RLR05C53R6%&	53.6	1/8	F	S	P, R	DAL, IRC
RLR05C54R9%&	54.9	1/8	F	S	P, R	DAL, IRC
RLR05C56R0%&	56.0	1/8	G	S	P, R	DAL, IRC
RLR05C56R2%&	56.2	1/8	F	S	P, R	DAL, IRC
RLR05C57R6%&	57.6	1/8	F	S	P, R	DAL, IRC
RLR05C59R0%&	59.0	1/8	F	S	P, R	DAL, IRC
RLR05C60R4%&	60.4	1/8	F	S	P, R	DAL, IRC
RLR05C61R9%&	61.9	1/8	F	S	P, R	DAL, IRC
RLR05C62R0%&	62.0	1/8	G	S	P, R	DAL, IRC
RLR05C63R4%&	63.4	1/8	F	S	P, R	DAL, IRC
RLR05C64R9%&	64.9	1/8	F	S	P, R	DAL, IRC
RLR05C66R5%&	66.5	1/8	F	S	P, R	DAL, IRC
RLR05C68R0%&	68.0	1/8	G	S	P, R	DAL, IRC
RLR05C68R1%&	68.1	1/8	F	S	P, R	DAL, IRC
RLR05C69R8%&	69.8	1/8	F	S	P, R	DAL, IRC
RLR05C71R5%&	71.5	1/8	F	S	P, R	DAL, IRC
RLR05C73R2%&	73.2	1/8	F	S	P, R	DAL, IRC
RLR05C75R0%&	75.0	1/8	F	S	P, R	DAL, IRC
RLR05C76R8%&	76.8	1/8	F	S	P, R	DAL, IRC
RLR05C78R7%&	78.7	1/8	F	S	P, R	DAL, IRC
RLR05C80R6%&	80.6	1/8	F	S	P, R	DAL, IRC
RLR05C82R0%&	82.0	1/8	G	S	P, R	DAL, IRC
RLR05C82R5%&	82.5	1/8	F	S	P, R	DAL, IRC
RLR05C84R5%&	84.5	1/8	F	S	P, R	DAL, IRC
RLR05C86R7%&	86.7	1/8	F	S	P, R	DAL, IRC
RLR05C88R7%&	88.7	1/8	F	S	P, R	DAL, IRC
RLR05C90R9%&	90.9	1/8	F	S	P, R	DAL, IRC
RLR05C91R0%&	91.0	1/8	G	S	P, R	DAL, IRC
RLR05C93R1%&	93.1	1/8	F	S	P, R	DAL, IRC
RLR05C95R3%&	95.3	1/8	F	S	P, R	DAL, IRC
RLR05C97R6%&	97.6	1/8	F	S	P, R	DAL, IRC

RLR05 Film Resistors: 10.0 Ohms through 97.6 Ohms

	Resistance	Power	Resistance	Level 1	Level 2	
Part Number	Value (Ohms)	Rating (W)	Tolerance (%)	(FRL)(&)	(FRL)(&)	Manufacturer
RLR05C1000%&	100	1/8	F, G	S	P, R	DAL, IRC
RLR05C1020%&	102	1/8	F	S	P, R	DAL, IRC
RLR05C1050%&	105	1/8	F	S	P, R	DAL, IRC
RLR05C1070%&	107	1/8	F	S	P, R	DAL, IRC
RLR05C1100%&	110	1/8	F, G	S	P, R	DAL, IRC
RLR05C1130%&	113	1/8	F	S	P, R	DAL, IRC
RLR05C1150%&	115	1/8	F	S	P, R	DAL, IRC
RLR05C1180%&	118	1/8	F	S	P, R	DAL, IRC
RLR05C1200%&	120	1/8	G	S	P, R	DAL, IRC
RLR05C1210%&	121	1/8	F	S	P, R	DAL, IRC
RLR05C1240%&	124	1/8	F	S	P, R	DAL, IRC
RLR05C1270%&	127	1/8	F	S	P, R	DAL, IRC
RLR05C1300%&	130	1/8	F, G	S	P, R	DAL, IRC
RLR05C1330%&	133	1/8	F	S	P, R	DAL, IRC
RLR05C1370%&	137	1/8	F	S	P, R	DAL, IRC
RLR05C1400%&	140	1/8	F	S	P, R	DAL, IRC
RLR05C1430%&	143	1/8	F	S	P, R	DAL, IRC
RLR05C1470%&	147	1/8	F	S	P, R	DAL, IRC
RLR05C1500%&	150	1/8	F, G	S	P, R	DAL, IRC
RLR05C1540%&	154	1/8	F	S	P, R	DAL, IRC
RLR05C1580%&	158	1/8	F	S	P, R	DAL, IRC
RLR05C1600%&	160	1/8	G	S	P, R	DAL, IRC
RLR05C1620%&	162	1/8	F	S	P, R	DAL, IRC
RLR05C1650%&	165	1/8	F	S	P, R	DAL, IRC
RLR05C1690%&	169	1/8	F	S	P, R	DAL, IRC
RLR05C1740%&	174	1/8	F	S	P, R	DAL, IRC
RLR05C1780%&	178	1/8	F	S	P, R	DAL, IRC
RLR05C1800%&	180	1/8	G	S	P, R	DAL, IRC
RLR05C1820%&	182	1/8	F	S	P, R	DAL, IRC
RLR05C1870%&	187	1/8	F	S	P, R	DAL, IRC
RLR05C1910%&	191	1/8	F	S	P, R	DAL, IRC
RLR05C1960%&	196	1/8	F	S	P, R	DAL, IRC
RLR05C2000%&	200	1/8	F, G	S	P, R	DAL, IRC
RLR05C2050%&	205	1/8	F	S	P, R	DAL, IRC
RLR05C2100%&	210	1/8	F	S	P, R	DAL, IRC
RLR05C2150%&	215	1/8	F	S	P, R	DAL, IRC
RLR05C2200%&	220	1/8	G	S	P, R	DAL, IRC
RLR05C2210%&	221	1/8	F	S	P, R	DAL, IRC
RLR05C2260%&	226	1/8	F	S	P, R	DAL, IRC
RLR05C2320%&	232	1/8	F	S	P, R	DAL, IRC
RLR05C2370%&	237	1/8	F	S	P, R	DAL, IRC
RLR05C2400%&	240	1/8	G	S	P, R	DAL, IRC

RLR05C2430%&	243	1/8	F	S	P, R	DAL, IRC
RLR05C2490%&	249	1/8	F	S	P, R	DAL, IRC
RLR05C2550%&	255	1/8	F	S	P, R	DAL, IRC
RLR05C2610%&	261	1/8	F	S	P, R	DAL, IRC
RLR05C2670%&	267	1/8	F	S	P, R	DAL, IRC
RLR05C2700%&	270	1/8	G	S	P, R	DAL, IRC
RLR05C2740%&	274	1/8	F	S	P, R	DAL, IRC
RLR05C2800%&	280	1/8	F	S	P, R	DAL, IRC
RLR05C2870%&	287	1/8	F	S	P, R	DAL, IRC
RLR05C2940%&	294	1/8	F	S	P, R	DAL, IRC
RLR05C3000%&	300	1/8	G	S	P, R	DAL, IRC
RLR05C3010%&	301	1/8	F	S	P, R	DAL, IRC
RLR05C3090%&	309	1/8	F	S	P, R	DAL, IRC
RLR05C3160%&	316	1/8	F	S	P, R	DAL, IRC
RLR05C3240%&	324	1/8	F	S	P, R	DAL, IRC
RLR05C3300%&	330	1/8	G	S	P, R	DAL, IRC
RLR05C3320%&	332	1/8	F	S	P, R	DAL, IRC
RLR05C3400%&	340	1/8	F	S	P, R	DAL, IRC
RLR05C3480%&	348	1/8	F	S	P, R	DAL, IRC
RLR05C3570%&	357	1/8	F	S	P, R	DAL, IRC
RLR05C3600%&	360	1/8	G	S	P, R	DAL, IRC
RLR05C3650%&	365	1/8	F	S	P, R	DAL, IRC
RLR05C3740%&	374	1/8	F	S	P, R	DAL, IRC
RLR05C3830%&	383	1/8	F	S	P, R	DAL, IRC
RLR05C3900%&	390	1/8	G	S	P, R	DAL, IRC
RLR05C3920%&	392	1/8	F	S	P, R	DAL, IRC
RLR05C4020%&	402	1/8	F	S	P, R	DAL, IRC
RLR05C4120%&	412	1/8	F	S	P, R	DAL, IRC
RLR05C4220%&	422	1/8	F	S	P, R	DAL, IRC
RLR05C4300%&	430	1/8	G	S	P, R	DAL, IRC
RLR05C4320%&	432	1/8	F	S	P, R	DAL, IRC
RLR05C4420%&	442	1/8	F	S	P, R	DAL, IRC
RLR05C4530%&	453	1/8	F	S	P, R	DAL, IRC
RLR05C4640%&	464	1/8	F	S	P, R	DAL, IRC
RLR05C4700%&	470	1/8	G	S	P, R	DAL, IRC
RLR05C4750%&	475	1/8	F	S	P, R	DAL, IRC
RLR05C4870%&	487	1/8	F	S	P, R	DAL, IRC
RLR05C4990%&	499	1/8	F	S	P, R	DAL, IRC
RLR05C5100%&	510	1/8	G	S	P, R	DAL, IRC
RLR05C5110%&	511	1/8	F	S	P, R	DAL, IRC
RLR05C5230%&	523	1/8	F	S	P, R	DAL, IRC
RLR05C5360%&	536	1/8	F	S	P, R	DAL, IRC
RLR05C5490%&	549	1/8	F	S	P, R	DAL, IRC
RLR05C5600%&	560	1/8	G	S	P, R	DAL, IRC
RLR05C5620%&	562	1/8	F	S	P, R	DAL, IRC
RLR05C5760%&	576	1/8	F	S	P, R	DAL, IRC
RLR05C5900%&	590	1/8	F	S	P, R	DAL, IRC

RLR05C6040%&	604	1/8	F	S	P, R	DAL, IRC
RLR05C6190%&	619	1/8	F	S	P, R	DAL, IRC
RLR05C6200%&	620	1/8	G	S	P, R	DAL, IRC
RLR05C6340%&	634	1/8	F	S	P, R	DAL, IRC
RLR05C6490%&	649	1/8	F	S	P, R	DAL, IRC
RLR05C6650%&	665	1/8	F	S	P, R	DAL, IRC
RLR05C6800%&	680	1/8	G	S	P, R	DAL, IRC
RLR05C6810%&	681	1/8	F	S	P, R	DAL, IRC
RLR05C6980%&	698	1/8	F	S	P, R	DAL, IRC
RLR05C7150%&	715	1/8	F	S	P, R	DAL, IRC
RLR05C7320%&	732	1/8	F	S	P, R	DAL, IRC
RLR05C7500%&	750	1/8	F	S	P, R	DAL, IRC
RLR05C7680%&	768	1/8	F	S	P, R	DAL, IRC
RLR05C7870%&	787	1/8	F	S	P, R	DAL, IRC
RLR05C8060%&	806	1/8	F	S	P, R	DAL, IRC
RLR05C8200%&	820	1/8	G	S	P, R	DAL, IRC
RLR05C8250%&	825	1/8	F	S	P, R	DAL, IRC
RLR05C8450%&	845	1/8	F	S	P, R	DAL, IRC
RLR05C8670%&	867	1/8	F	S	P, R	DAL, IRC
RLR05C8870%&	887	1/8	F	S	P, R	DAL, IRC
RLR05C9090%&	909	1/8	F	S	P, R	DAL, IRC
RLR05C9100%&	910	1/8	G	S	P, R	DAL, IRC
RLR05C9310%&	931	1/8	F	S	P, R	DAL, IRC
RLR05C9530%&	953	1/8	F	S	P, R	DAL, IRC
RLR05C9760%&	976	1/8	F	S	P, R	DAL, IRC

RLR05C1001%&	1,000	1/8	F, G	S	P, R	DAL, IRC
RLR05C1021%&	1,020	1/8	F	S	P, R	DAL, IRC
RLR05C1051%&	1,050	1/8	F	S	P, R	DAL, IRC
RLR05C1071%&	1,070	1/8	F	S	P, R	DAL, IRC
RLR05C1101%&	1,100	1/8	F, G	S	P, R	DAL, IRC
RLR05C1131%&	1,130	1/8	F	S	P, R	DAL, IRC
RLR05C1151%&	1,150	1/8	F	S	P, R	DAL, IRC
RLR05C1181%&	1,180	1/8	F	S	P, R	DAL, IRC
RLR05C1201%&	1,200	1/8	G	S	P, R	DAL, IRC
RLR05C1211%&	1,210	1/8	F	S	P, R	DAL, IRC
RLR05C1241%&	1,240	1/8	F	S	P, R	DAL, IRC
RLR05C1271%&	1,270	1/8	F	S	P, R	DAL, IRC
RLR05C1301%&	1,300	1/8	F, G	S	P, R	DAL, IRC
RLR05C1331%&	1,330	1/8	F	S	P, R	DAL, IRC
RLR05C1371%&	1,370	1/8	F	S	P, R	DAL, IRC
RLR05C1401%&	1,400	1/8	F	S	P, R	DAL, IRC
RLR05C1431%&	1,430	1/8	F	S	P, R	DAL, IRC
RLR05C1471%&	1,470	1/8	F	S	P, R	DAL, IRC
RLR05C1501%&	1,500	1/8	F, G	S	P, R	DAL, IRC

RLR05C1541%&	1,540	1/8	F	S	P, R	DAL, IRC
RLR05C1581%&	1,580	1/8	F	S	P, R	DAL, IRC
RLR05C1601%&	1,600	1/8	G	S	P, R	DAL, IRC
RLR05C1621%&	1,620	1/8	F	S	P, R	DAL, IRC
RLR05C1651%&	1,650	1/8	F	S	P, R	DAL, IRC
RLR05C1691%&	1,690	1/8	F	S	P, R	DAL, IRC
RLR05C1741%&	1,740	1/8	F	S	P, R	DAL, IRC
RLR05C1781%&	1,780	1/8	F	S	P, R	DAL, IRC
RLR05C1801%&	1,800	1/8	G	S	P, R	DAL, IRC
RLR05C1821%&	1,820	1/8	F	S	P, R	DAL, IRC
RLR05C1871%&	1,870	1/8	F	S	P, R	DAL, IRC
RLR05C1911%&	1,910	1/8	F	S	P, R	DAL, IRC
RLR05C1961%&	1,960	1/8	F	S	P, R	DAL, IRC
RLR05C2001%&	2,000	1/8	F, G	S	P, R	DAL, IRC
RLR05C2051%&	2,050	1/8	F	S	P, R	DAL, IRC
RLR05C2101%&	2,100	1/8	F	S	P, R	DAL, IRC
RLR05C2151%&	2,150	1/8	F	S	P, R	DAL, IRC
RLR05C2201%&	2,200	1/8	G	S	P, R	DAL, IRC
RLR05C2211%&	2,210	1/8	F	S	P, R	DAL, IRC
RLR05C2261%&	2,260	1/8	F	S	P, R	DAL, IRC
RLR05C2321%&	2,320	1/8	F	S	P, R	DAL, IRC
RLR05C2371%&	2,370	1/8	F	S	P, R	DAL, IRC
RLR05C2401%&	2,400	1/8	G	S	P, R	DAL, IRC
RLR05C2431%&	2,430	1/8	F	S	P, R	DAL, IRC
RLR05C2491%&	2,490	1/8	F	S	P, R	DAL, IRC
RLR05C2551%&	2,550	1/8	F	S	P, R	DAL, IRC
RLR05C2611%&	2,610	1/8	F	S	P, R	DAL, IRC
RLR05C2671%&	2,670	1/8	F	S	P, R	DAL, IRC
RLR05C2701%&	2,700	1/8	G	S	P, R	DAL, IRC
RLR05C2741%&	2,740	1/8	F	S	P, R	DAL, IRC
RLR05C2801%&	2,800	1/8	F	S	P, R	DAL, IRC
RLR05C2871%&	2,870	1/8	F	S	P, R	DAL, IRC
RLR05C2941%&	2,940	1/8	F	S	P, R	DAL, IRC
RLR05C3001%&	3,000	1/8	G	S	P, R	DAL, IRC
RLR05C3011%&	3,010	1/8	F	S	P, R	DAL, IRC
RLR05C3091%&	3,090	1/8	F	S	P, R	DAL, IRC
RLR05C3161%&	3,160	1/8	F	S	P, R	DAL, IRC
RLR05C3241%&	3,240	1/8	F	S	P, R	DAL, IRC
RLR05C3301%&	3,300	1/8	G	S	P, R	DAL, IRC
RLR05C3321%&	3,320	1/8	F	S	P, R	DAL, IRC
RLR05C3401%&	3,400	1/8	F	S	P, R	DAL, IRC
RLR05C3481%&	3,480	1/8	F	S	P, R	DAL, IRC
RLR05C3571%&	3,570	1/8	F	S	P, R	DAL, IRC
RLR05C3601%&	3,600	1/8	G	S	P, R	DAL, IRC
RLR05C3651%&	3,650	1/8	F	S	P, R	DAL, IRC
RLR05C3741%&	3,740	1/8	F	S	P, R	DAL, IRC
RLR05C3831%&	3,830	1/8	F	S	P, R	DAL, IRC

RLR05C3901%&	3,900	1/8	G	S	P, R	DAL, IRC
RLR05C3921%&	3,920	1/8	F	S	P, R	DAL, IRC
RLR05C4021%&	4,020	1/8	F	S	P, R	DAL, IRC
RLR05C4121%&	4,120	1/8	F	S	P, R	DAL, IRC
RLR05C4221%&	4,220	1/8	F	S	P, R	DAL, IRC
RLR05C4301%&	4,300	1/8	G	S	P, R	DAL, IRC
RLR05C4321%&	4,320	1/8	F	S	P, R	DAL, IRC
RLR05C4421%&	4,420	1/8	F	S	P, R	DAL, IRC
RLR05C4531%&	4,530	1/8	F	S	P, R	DAL, IRC
RLR05C4641%&	4,640	1/8	F	S	P, R	DAL, IRC
RLR05C4701%&	4,700	1/8	G	S	P, R	DAL, IRC
RLR05C4751%&	4,750	1/8	F	S	P, R	DAL, IRC
RLR05C4871%&	4,870	1/8	F	S	P, R	DAL, IRC
RLR05C4991%&	4,990	1/8	F	S	P, R	DAL, IRC
RLR05C5101%&	5,100	1/8	G	S	P, R	DAL, IRC
RLR05C5111%&	5,110	1/8	F	S	P, R	DAL, IRC
RLR05C5231%&	5,230	1/8	F	S	P, R	DAL, IRC
RLR05C5361%&	5,360	1/8	F	S	P, R	DAL, IRC
RLR05C5491%&	5,490	1/8	F	S	P, R	DAL, IRC
RLR05C5601%&	5,600	1/8	G	S	P, R	DAL, IRC
RLR05C5621%&	5,620	1/8	F	S	P, R	DAL, IRC
RLR05C5761%&	5,760	1/8	F	S	P, R	DAL, IRC
RLR05C5901%&	5,900	1/8	F	S	P, R	DAL, IRC
RLR05C6041%&	6,040	1/8	F	S	P, R	DAL, IRC
RLR05C6191%&	6,190	1/8	F	S	P, R	DAL, IRC
RLR05C6201%&	6,200	1/8	G	S	P, R	DAL, IRC
RLR05C6341%&	6,340	1/8	F	S	P, R	DAL, IRC
RLR05C6491%&	6,490	1/8	F	S	P, R	DAL, IRC
RLR05C6651%&	6,650	1/8	F	S	P, R	DAL, IRC
RLR05C6801%&	6,800	1/8	G	S	P, R	DAL, IRC
RLR05C6811%&	6,810	1/8	F	S	P, R	DAL, IRC
RLR05C6981%&	6,980	1/8	F	S	P, R	DAL, IRC
RLR05C7151%&	7,150	1/8	F	S	P, R	DAL, IRC
RLR05C7321%&	7,320	1/8	F	S	P, R	DAL, IRC
RLR05C7501%&	7,500	1/8	F	S	P, R	DAL, IRC
RLR05C7681%&	7,680	1/8	F	S	P, R	DAL, IRC
RLR05C7871%&	7,870	1/8	F	S	P, R	DAL, IRC
RLR05C8061%&	8,060	1/8	F	S	P, R	DAL, IRC
RLR05C8201%&	8,200	1/8	G	S	P, R	DAL, IRC
RLR05C8251%&	8,250	1/8	F	S	P, R	DAL, IRC
RLR05C8451%&	8,450	1/8	F	S	P, R	DAL, IRC
RLR05C8671%&	8,670	1/8	F	S	P, R	DAL, IRC
RLR05C8871%&	8,870	1/8	F	S	P, R	DAL, IRC
RLR05C9091%&	9,090	1/8	F	S	P, R	DAL, IRC
RLR05C9101%&	9,100	1/8	G	S	P, R	DAL, IRC
RLR05C9311%&	9,310	1/8	F	S	P, R	DAL, IRC
RLR05C9531%&	9,530	1/8	F	S	P, R	DAL, IRC

RLR05C9761%&	9,760	1/8	F	S	P, R	DAL, IRC

RLR05 Film Resistors: 1,000 Ohms through 9,760 Ohms

Part Number	Resistance Value (Ohms)	Power Rating (W)	Resistance Tolerance (%)	Level 1 (FRL)(&)	Level 2 (FRL)(&)	Manufacturer
RLR05C1002%&	10,000	1/8	F, G	S	P, R	DAL, IRC
RLR05C1022%&	10,200	1/8	F	S	P, R	DAL, IRC
RLR05C1052%&	10,500	1/8	F	S	P, R	DAL, IRC
RLR05C1072%&	10,700	1/8	F	S	P, R	DAL, IRC
RLR05C1102%&	11,000	1/8	F, G	S	P, R	DAL, IRC
RLR05C1132%&	11,300	1/8	F	S	P, R	DAL, IRC
RLR05C1152%&	11,500	1/8	F	S	P, R	DAL, IRC
RLR05C1182%&	11,800	1/8	F	S	P, R	DAL, IRC
RLR05C1202%&	12,000	1/8	G	S	P, R	DAL, IRC
RLR05C1212%&	12,100	1/8	F	S	P, R	DAL, IRC
RLR05C1242%&	12,400	1/8	F	S	P, R	DAL, IRC
RLR05C1272%&	12,700	1/8	F	S	P, R	DAL, IRC
RLR05C1302%&	13,000	1/8	F, G	S	P, R	DAL, IRC
RLR05C1332%&	13,300	1/8	F	S	P, R	DAL, IRC
RLR05C1372%&	13,700	1/8	F	S	P, R	DAL, IRC
RLR05C1402%&	14,000	1/8	F	S	P, R	DAL, IRC
RLR05C1432%&	14,300	1/8	F	S	P, R	DAL, IRC
RLR05C1472%&	14,700	1/8	F	S	P, R	DAL, IRC
RLR05C1502%&	15,000	1/8	F, G	S	P, R	DAL, IRC
RLR05C1542%&	15,400	1/8	F	S	P, R	DAL, IRC
RLR05C1582%&	15,800	1/8	F	S	P, R	DAL, IRC
RLR05C1602%&	16,000	1/8	G	S	P, R	DAL, IRC
RLR05C1622%&	16,200	1/8	F	S	P, R	DAL, IRC
RLR05C1652%&	16,500	1/8	F	S	P, R	DAL, IRC
RLR05C1692%&	16,900	1/8	F	S	P, R	DAL, IRC
RLR05C1742%&	17,400	1/8	F	S	P, R	DAL, IRC
RLR05C1782%&	17,800	1/8	F	S	P, R	DAL, IRC
RLR05C1802%&	18,000	1/8	G	S	P, R	DAL, IRC
RLR05C1822%&	18,200	1/8	F	S	P, R	DAL, IRC
RLR05C1872%&	18,700	1/8	F	S	P, R	DAL, IRC
RLR05C1912%&	19,100	1/8	F	S	P, R	DAL, IRC
RLR05C1962%&	19,600	1/8	F	S	P, R	DAL, IRC
RLR05C2002%&	20,000	1/8	F, G	S	P, R	DAL, IRC
RLR05C2052%&	20,500	1/8	F	S	P, R	DAL, IRC
RLR05C2102%&	21,000	1/8	F	S	P, R	DAL, IRC
RLR05C2152%&	21,500	1/8	F	S	P, R	DAL, IRC

RLR05C2202%&	22,000	1/8	G	S	P, R	DAL, IRC
RLR05C2212%&	22,100	1/8	F	S	P, R	DAL, IRC
RLR05C2262%&	22,600	1/8	F	S	P, R	DAL, IRC
RLR05C2322%&	23,200	1/8	F	S	P, R	DAL, IRC
RLR05C2372%&	23,700	1/8	F	S	P, R	DAL, IRC
RLR05C2402%&	24,000	1/8	G	S	P, R	DAL, IRC
RLR05C2432%&	24,300	1/8	F	S	P, R	DAL, IRC
RLR05C2492%&	24,900	1/8	F	S	P, R	DAL, IRC
RLR05C2552%&	25,500	1/8	F	S	P, R	DAL, IRC
RLR05C2612%&	26,100	1/8	F	S	P, R	DAL, IRC
RLR05C2672%&	26,700	1/8	F	S	P, R	DAL, IRC
RLR05C2702%&	27,000	1/8	G	S	P, R	DAL, IRC
RLR05C2742%&	27,400	1/8	F	S	P, R	DAL, IRC
RLR05C2802%&	28,000	1/8	F	S	P, R	DAL, IRC
RLR05C2872%&	28,700	1/8	F	S	P, R	DAL, IRC
RLR05C2942%&	29,400	1/8	F	S	P, R	DAL, IRC
RLR05C3002%&	30,000	1/8	G	S	P, R	DAL, IRC
RLR05C3012%&	30,100	1/8	F	S	P, R	DAL, IRC
RLR05C3092%&	30,900	1/8	F	S	P, R	DAL, IRC
RLR05C3162%&	31,600	1/8	F	S	P, R	DAL, IRC
RLR05C3242%&	32,400	1/8	F	S	P, R	DAL, IRC
RLR05C3302%&	33,000	1/8	G	S	P, R	DAL, IRC
RLR05C3322%&	33,200	1/8	F	S	P, R	DAL, IRC
RLR05C3402%&	34,000	1/8	F	S	P, R	DAL, IRC
RLR05C3482%&	34,800	1/8	F	S	P, R	DAL, IRC
RLR05C3572%&	35,700	1/8	F	S	P, R	DAL, IRC
RLR05C3602%&	36,000	1/8	G	S	P, R	DAL, IRC
RLR05C3652%&	36,500	1/8	F	S	P, R	DAL, IRC
RLR05C3742%&	37,400	1/8	F	S	P, R	DAL, IRC
RLR05C3832%&	38,300	1/8	F	S	P, R	DAL, IRC
RLR05C3902%&	39,000	1/8	G	S	P, R	DAL, IRC
RLR05C3922%&	39,200	1/8	F	S	P, R	DAL, IRC
RLR05C4022%&	40,200	1/8	F	S	P, R	DAL, IRC
RLR05C4122%&	41,200	1/8	F	S	P, R	DAL, IRC
RLR05C4222%&	42,200	1/8	F	S	P, R	DAL, IRC
RLR05C4302%&	43,000	1/8	G	S	P, R	DAL, IRC
RLR05C4322%&	43,200	1/8	F	S	P, R	DAL, IRC
RLR05C4422%&	44,200	1/8	F	S	P, R	DAL, IRC
RLR05C4532%&	45,300	1/8	F	S	P, R	DAL, IRC
RLR05C4642%&	46,400	1/8	F	S	P, R	DAL, IRC
RLR05C4702%&	47,000	1/8	G	S	P, R	DAL, IRC
RLR05C4752%&	47,500	1/8	F	S	P, R	DAL, IRC
RLR05C4872%&	48,700	1/8	F	S	P, R	DAL, IRC
RLR05C4992%&	49,900	1/8	F	S	P, R	DAL, IRC
RLR05C5102%&	51,000	1/8	G	S	P, R	DAL, IRC
RLR05C5112%&	51,100	1/8	F	S	P, R	DAL, IRC
RLR05C5232%&	52,300	1/8	F	S	P, R	DAL, IRC

RLR05C5362%&	53,600	1/8	F	S	P, R	DAL, IRC
RLR05C5492%&	54,900	1/8	F	S	P, R	DAL, IRC
RLR05C5602%&	56,000	1/8	G	S	P, R	DAL, IRC
RLR05C5622%&	56,200	1/8	F	S	P, R	DAL, IRC
RLR05C5762%&	57,600	1/8	F	S	P, R	DAL, IRC
RLR05C5902%&	59,000	1/8	F	S	P, R	DAL, IRC
RLR05C6042%&	60,400	1/8	F	S	P, R	DAL, IRC
RLR05C6192%&	61,900	1/8	F	S	P, R	DAL, IRC
RLR05C6202%&	62,000	1/8	G	S	P, R	DAL, IRC
RLR05C6342%&	63,400	1/8	F	S	P, R	DAL, IRC
RLR05C6492%&	64,900	1/8	F	S	P, R	DAL, IRC
RLR05C6652%&	66,500	1/8	F	S	P, R	DAL, IRC
RLR05C6802%&	68,000	1/8	G	S	P, R	DAL, IRC
RLR05C6812%&	68,100	1/8	F	S	P, R	DAL, IRC
RLR05C6982%&	69,800	1/8	F	S	P, R	DAL, IRC
RLR05C7152%&	71,500	1/8	F	S	P, R	DAL, IRC
RLR05C7322%&	73,200	1/8	F	S	P, R	DAL, IRC
RLR05C7502%&	75,000	1/8	F	S	P, R	DAL, IRC
RLR05C7682%&	76,800	1/8	F	S	P, R	DAL, IRC
RLR05C7872%&	78,700	1/8	F	S	P, R	DAL, IRC
RLR05C8062%&	80,600	1/8	F	S	P, R	DAL, IRC
RLR05C8202%&	82,000	1/8	G	S	P, R	DAL, IRC
RLR05C8252%&	82,500	1/8	F	S	P, R	DAL, IRC
RLR05C8452%&	84,500	1/8	F	S	P, R	DAL, IRC
RLR05C8672%&	86,700	1/8	F	S	P, R	DAL, IRC
RLR05C8872%&	88,700	1/8	F	S	P, R	DAL, IRC
RLR05C9092%&	90,900	1/8	F	S	P, R	DAL, IRC
RLR05C9102%&	91,000	1/8	G	S	P, R	DAL, IRC
RLR05C9312%&	93,100	1/8	F	S	P, R	DAL, IRC
RLR05C9532%&	95,300	1/8	F	S	P, R	DAL, IRC
RLR05C9762%&	97,600	1/8	F	S	P, R	DAL, IRC

RLR05 Film Resistors: 10,000 Ohms through 976,000 Ohms

	Resistance

Power

Resistance

Level 1

Level 2

Part Number

Value (Ohms)

Rating (W)

Tolerance (%)

(FRL)()

(FRL)()

Manufacturer

RLR05C1003%&	100,000	1/8	F, G	S	P, R	DAL, IRC
RLR05C1023%&	102,000	1/8	F	S	P, R	DAL, IRC
RLR05C1053%&	105,000	1/8	F	S	P, R	DAL, IRC
RLR05C1073%&	107,000	1/8	F	S	P, R	DAL, IRC
RLR05C1103%&	110,000	1/8	F, G	S	P, R	DAL, IRC
RLR05C1133%&	113,000	1/8	F	S	P, R	DAL, IRC
RLR05C1153%&	115,000	1/8	F	S	P, R	DAL, IRC
RLR05C1183%&	118,000	1/8	F	S	P, R	DAL, IRC
RLR05C1203%&	120,000	1/8	G	S	P, R	DAL, IRC
RLR05C1213%&	121,000	1/8	F	S	P, R	DAL, IRC
RLR05C1243%&	124,000	1/8	F	S	P, R	DAL, IRC
RLR05C1273%&	127,000	1/8	F	S	P, R	DAL, IRC
RLR05C1303%&	130,000	1/8	F, G	S	P, R	DAL, IRC
RLR05C1333%&	133,000	1/8	F	S	P, R	DAL, IRC
RLR05C1373%&	137,000	1/8	F	S	P, R	DAL, IRC
RLR05C1403%&	140,000	1/8	F	S	P, R	DAL, IRC
RLR05C1433%&	143,000	1/8	F	S	P, R	DAL, IRC
RLR05C1473%&	147,000	1/8	F	S	P, R	DAL, IRC
RLR05C1503%&	150,000	1/8	F, G	S	P, R	DAL, IRC
RLR05C1543%&	154,000	1/8	F	S	P, R	DAL, IRC
RLR05C1583%&	158,000	1/8	F	S	P, R	DAL, IRC
RLR05C1603%&	160,000	1/8	G	S	P, R	DAL, IRC
RLR05C1623%&	162,000	1/8	F	S	P, R	DAL, IRC
RLR05C1653%&	165,000	1/8	F	S	P, R	DAL, IRC
RLR05C1693%&	169,000	1/8	F	S	P, R	DAL, IRC
RLR05C1743%&	174,000	1/8	F	S	P, R	DAL, IRC
RLR05C1783%&	178,000	1/8	F	S	P, R	DAL, IRC
RLR05C1803%&	180,000	1/8	G	S	P, R	DAL, IRC
RLR05C1823%&	182,000	1/8	F	S	P, R	DAL, IRC
RLR05C1873%&	187,000	1/8	F	S	P, R	DAL, IRC
RLR05C1913%&	191,000	1/8	F	S	P, R	DAL, IRC
RLR05C1963%&	196,000	1/8	F	S	P, R	DAL, IRC
RLR05C2003%&	200,000	1/8	F, G	S	P, R	DAL, IRC
RLR05C2053%&	205,000	1/8	F	S	P, R	DAL, IRC
RLR05C2103%&	210,000	1/8	F	S	P, R	DAL, IRC
RLR05C2153%&	215,000	1/8	F	S	P, R	DAL, IRC
RLR05C2203%&	220,000	1/8	G	S	P, R	DAL, IRC
RLR05C2213%&	221,000	1/8	F	S	P, R	DAL, IRC
RLR05C2263%&	226,000	1/8	F	S	P, R	DAL, IRC
RLR05C2323%&	232,000	1/8	F	S	P, R	DAL, IRC
RLR05C2373%&	237,000	1/8	F	S	P, R	DAL, IRC

RLR05C2403%&	240,000	1/8	G	S	P, R	DAL, IRC
RLR05C2433%&	243,000	1/8	F	S	P, R	DAL, IRC
RLR05C2493%&	249,000	1/8	F	S	P, R	DAL, IRC
RLR05C2553%&	255,000	1/8	F	S	P, R	DAL, IRC
RLR05C2613%&	261,000	1/8	F	S	P, R	DAL, IRC
RLR05C2673%&	267,000	1/8	F	S	P, R	DAL, IRC
RLR05C2703%&	270,000	1/8	G	S	P, R	DAL, IRC
RLR05C2743%&	274,000	1/8	F	S	P, R	DAL, IRC
RLR05C2803%&	280,000	1/8	F	S	P, R	DAL, IRC
RLR05C2873%&	287,000	1/8	F	S	P, R	DAL, IRC
RLR05C2943%&	294,000	1/8	F	S	P, R	DAL, IRC
RLR05C3003%&	300,000	1/8	G	S	P, R	DAL, IRC
RLR05C3013%&	301,000	1/8	F	S	P, R	DAL, IRC
RLR05C3093%&	309,000	1/8	F	-	P, R	DAL
RLR05C3163%&	316,000	1/8	F	-	P, R	DAL
RLR05C3243%&	324,000	1/8	F	-	P, R	DAL
RLR05C3303%&	330,000	1/8	G	-	P, R	DAL
RLR05C3323%&	332,000	1/8	F	-	P, R	DAL
RLR05C3403%&	340,000	1/8	F	-	P, R	DAL
RLR05C3483%&	348,000	1/8	F	-	P, R	DAL
RLR05C3573%&	357,000	1/8	F	-	P, R	DAL
RLR05C3603%&	360,000	1/8	G	-	P, R	DAL
RLR05C3653%&	365,000	1/8	F	-	P, R	DAL
RLR05C3743%&	374,000	1/8	F	-	P, R	DAL
RLR05C3833%&	383,000	1/8	F	-	P, R	DAL
RLR05C3903%&	390,000	1/8	G	-	P, R	DAL
RLR05C3923%&	392,000	1/8	F	-	P, R	DAL
RLR05C4023%&	402,000	1/8	F	-	P, R	DAL
RLR05C4123%&	412,000	1/8	F	-	P, R	DAL
RLR05C4223%&	422,000	1/8	F	-	P, R	DAL
RLR05C4303%&	430,000	1/8	G	-	P, R	DAL
RLR05C4323%&	432,000	1/8	F	-	P, R	DAL
RLR05C4423%&	442,000	1/8	F	-	P, R	DAL
RLR05C4533%&	453,000	1/8	F	-	P, R	DAL
RLR05C4643%&	464,000	1/8	F	-	P, R	DAL
RLR05C4703%&	470,000	1/8	G	-	P, R	DAL
RLR05C4753%&	475,000	1/8	F	-	P, R	DAL
RLR05C4873%&	487,000	1/8	F	-	P, R	DAL
RLR05C4993%&	499,000	1/8	F	-	P, R	DAL
RLR05C5103%&	510,000	1/8	G	-	P, R	DAL
RLR05C5113%&	511,000	1/8	F	-	P, R	DAL
RLR05C5233%&	523,000	1/8	F	-	P, R	DAL
RLR05C5363%&	536,000	1/8	F	-	P, R	DAL
RLR05C5493%&	549,000	1/8	F	-	P, R	DAL
RLR05C5603%&	560,000	1/8	G	-	P, R	DAL
RLR05C5623%&	562,000	1/8	F	-	P, R	DAL
RLR05C5763%&	576,000	1/8	F	-	P, R	DAL

RLR05C5903%&	590,000	1/8	F	-	P, R	DAL
RLR05C6043%&	604,000	1/8	F	-	P, R	DAL
RLR05C6193%&	619,000	1/8	F	-	P, R	DAL
RLR05C6203%&	620,000	1/8	G	-	P, R	DAL
RLR05C6343%&	634,000	1/8	F	-	P, R	DAL
RLR05C6493%&	649,000	1/8	F	-	P, R	DAL
RLR05C6653%&	665,000	1/8	F	-	P, R	DAL
RLR05C6803%&	680,000	1/8	G	-	P, R	DAL
RLR05C6813%&	681,000	1/8	F	-	P, R	DAL
RLR05C6983%&	698,000	1/8	F	-	P, R	DAL
RLR05C7153%&	715,000	1/8	F	-	P, R	DAL
RLR05C7323%&	732,000	1/8	F	-	P, R	DAL
RLR05C7503%&	750,000	1/8	F	-	P, R	DAL
RLR05C7683%&	768,000	1/8	F	-	P, R	DAL
RLR05C7873%&	787,000	1/8	F	-	P, R	DAL
RLR05C8063%&	806,000	1/8	F	-	P, R	DAL
RLR05C8203%&	820,000	1/8	G	-	P, R	DAL
RLR05C8253%&	825,000	1/8	F	-	P, R	DAL
RLR05C8453%&	845,000	1/8	F	-	P, R	DAL
RLR05C8673%&	867,000	1/8	F	-	P, R	DAL
RLR05C8873%&	887,000	1/8	F	-	P, R	DAL
RLR05C9093%&	909,000	1/8	F	-	P, R	DAL
RLR05C9103%&	910,000	1/8	G	-	P, R	DAL
RLR05C9313%&	931,000	1/8	F	-	P, R	DAL
RLR05C9533%&	953,000	1/8	F	-	P, R	DAL
RLR05C9763%&	976,000	1/8	F	-	P, R	DAL
RLR05C1004%&	1,000,000	1/8	F, G	-	P, R	DAL

RLR05 Film Resistors: 100,000 Ohms through 1,000,000 Ohms

	Resistance

Power

Resistance

Level 1

Level 2

Part Number

Value (Ohms)

Rating (W)

Tolerance (%)

(FRL)()

(FRL)()

Manufacturer

Part Number	Resistance Value (Ohms)	Power Rating (W)	Resistance Tolerance (%)	Level 1 (FRL)(&)	Level 2 (FRL)(&)	Manufacturer
RLR07C10R0%&	10.0	1/4	F, G	S	P, R	DAL, IRC
RLR07C10R2%&	10.2	1/4	F	S	P, R	DAL, IRC
RLR07C10R5%&	10.5	1/4	F	S	P, R	DAL, IRC
RLR07C10R7%&	10.7	1/4	F	S	P, R	DAL, IRC
RLR07C11R0%&	11.0	1/4	F, G	S	P, R	DAL, IRC
RLR07C11R3%&	11.3	1/4	F	S	P, R	DAL, IRC
RLR07C11R5%&	11.5	1/4	F	S	P, R	DAL, IRC
RLR07C11R8%&	11.8	1/4	F	S	P, R	DAL, IRC
RLR07C12R0%&	12.0	1/4	G	S	P, R	DAL, IRC
RLR07C12R1%&	12.1	1/4	F	S	P, R	DAL, IRC
RLR07C12R4%&	12.4	1/4	F	S	P, R	DAL, IRC
RLR07C12R7%&	12.7	1/4	F	S	P, R	DAL, IRC
RLR07C13R0%&	13.0	1/4	F, G	S	P, R	DAL, IRC
RLR07C13R3%&	13.3	1/4	F	S	P, R	DAL, IRC
RLR07C13R7%&	13.7	1/4	F	S	P, R	DAL, IRC
RLR07C14R0%&	14.0	1/4	F	S	P, R	DAL, IRC
RLR07C14R3%&	14.3	1/4	F	S	P, R	DAL, IRC
RLR07C14R7%&	14.7	1/4	F	S	P, R	DAL, IRC
RLR07C15R0%&	15.0	1/4	F, G	S	P, R	DAL, IRC
RLR07C15R4%&	15.4	1/4	F	S	P, R	DAL, IRC
RLR07C15R8%&	15.8	1/4	F	S	P, R	DAL, IRC
RLR07C16R0%&	16.0	1/4	G	S	P, R	DAL, IRC
RLR07C16R2%&	16.2	1/4	F	S	P, R	DAL, IRC
RLR07C16R5%&	16.5	1/4	F	S	P, R	DAL, IRC
RLR07C16R9%&	16.9	1/4	F	S	P, R	DAL, IRC
RLR07C17R4%&	17.4	1/4	F	S	P, R	DAL, IRC
RLR07C17R8%&	17.8	1/4	F	S	P, R	DAL, IRC
RLR07C18R0%&	18.0	1/4	G	S	P, R	DAL, IRC
RLR07C18R2%&	18.2	1/4	F	S	P, R	DAL, IRC
RLR07C18R7%&	18.7	1/4	F	S	P, R	DAL, IRC
RLR07C19R1%&	19.1	1/4	F	S	P, R	DAL, IRC
RLR07C19R6%&	19.6	1/4	F	S	P, R	DAL, IRC
RLR07C20R0%&	20.0	1/4	F, G	S	P, R	DAL, IRC
RLR07C20R5%&	20.5	1/4	F	S	P, R	DAL, IRC
RLR07C21R0%&	21.0	1/4	F	S	P, R	DAL, IRC
RLR07C21R5%&	21.5	1/4	F	S	P, R	DAL, IRC
RLR07C22R0%&	22.0	1/4	G	S	P, R	DAL, IRC
RLR07C22R1%&	22.1	1/4	F	S	P, R	DAL, IRC
RLR07C22R6%&	22.6	1/4	F	S	P, R	DAL, IRC
RLR07C23R2%&	23.2	1/4	F	S	P, R	DAL, IRC
RLR07C23R7%&	23.7	1/4	F	S	P, R	DAL, IRC
RLR07C24R0%&	24.0	1/4	G	S	P, R	DAL, IRC

RLR07C24R3%&	24.3	1/4	F	S	P, R	DAL, IRC
RLR07C24R9%&	24.9	1/4	F	S	P, R	DAL, IRC
RLR07C25R5%&	25.5	1/4	F	S	P, R	DAL, IRC
RLR07C26R1%&	26.1	1/4	F	S	P, R	DAL, IRC
RLR07C26R7%&	26.7	1/4	F	S	P, R	DAL, IRC
RLR07C27R0%&	27.0	1/4	G	S	P, R	DAL, IRC
RLR07C27R4%&	27.4	1/4	F	S	P, R	DAL, IRC
RLR07C28R0%&	28.0	1/4	F	S	P, R	DAL, IRC
RLR07C28R7%&	28.7	1/4	F	S	P, R	DAL, IRC
RLR07C29R4%&	29.4	1/4	F	S	P, R	DAL, IRC
RLR07C30R0%&	30.0	1/4	G	S	P, R	DAL, IRC
RLR07C30R1%&	30.1	1/4	F	S	P, R	DAL, IRC
RLR07C30R9%&	30.9	1/4	F	S	P, R	DAL, IRC
RLR07C31R6%&	31.6	1/4	F	S	P, R	DAL, IRC
RLR07C32R4%&	32.4	1/4	F	S	P, R	DAL, IRC
RLR07C33R0%&	33.0	1/4	G	S	P, R	DAL, IRC
RLR07C33R2%&	33.2	1/4	F	S	P, R	DAL, IRC
RLR07C34R0%&	34.0	1/4	F	S	P, R	DAL, IRC
RLR07C34R8%&	34.8	1/4	F	S	P, R	DAL, IRC
RLR07C35R7%&	35.7	1/4	F	S	P, R	DAL, IRC
RLR07C36R0%&	36.0	1/4	G	S	P, R	DAL, IRC
RLR07C36R5%&	36.5	1/4	F	S	P, R	DAL, IRC
RLR07C37R4%&	37.4	1/4	F	S	P, R	DAL, IRC
RLR07C38R3%&	38.3	1/4	F	S	P, R	DAL, IRC
RLR07C39R0%&	39.0	1/4	G	S	P, R	DAL, IRC
RLR07C39R2%&	39.2	1/4	F	S	P, R	DAL, IRC
RLR07C40R2%&	40.2	1/4	F	S	P, R	DAL, IRC
RLR07C41R2%&	41.2	1/4	F	S	P, R	DAL, IRC
RLR07C42R2%&	42.2	1/4	F	S	P, R	DAL, IRC
RLR07C43R0%&	43.0	1/4	G	S	P, R	DAL, IRC
RLR07C43R2%&	43.2	1/4	F	S	P, R	DAL, IRC
RLR07C44R2%&	44.2	1/4	F	S	P, R	DAL, IRC
RLR07C45R3%&	45.3	1/4	F	S	P, R	DAL, IRC
RLR07C46R4%&	46.4	1/4	F	S	P, R	DAL, IRC
RLR07C47R0%&	47.0	1/4	G	S	P, R	DAL, IRC
RLR07C47R5%&	47.5	1/4	F	S	P, R	DAL, IRC
RLR07C48R7%&	48.7	1/4	F	S	P, R	DAL, IRC
RLR07C49R9%&	49.9	1/4	F	S	P, R	DAL, IRC
RLR07C51R0%&	51.0	1/4	G	S	P, R	DAL, IRC
RLR07C51R1%&	51.1	1/4	F	S	P, R	DAL, IRC
RLR07C52R3%&	52.3	1/4	F	S	P, R	DAL, IRC
RLR07C53R6%&	53.6	1/4	F	S	P, R	DAL, IRC
RLR07C54R9%&	54.9	1/4	F	S	P, R	DAL, IRC
RLR07C56R0%&	56.0	1/4	G	S	P, R	DAL, IRC
RLR07C56R2%&	56.2	1/4	F	S	P, R	DAL, IRC
RLR07C57R6%&	57.6	1/4	F	S	P, R	DAL, IRC
RLR07C59R0%&	59.0	1/4	F	S	P, R	DAL, IRC

RLR07C60R4%&	60.4	1/4	F	S	P, R	DAL, IRC
RLR07C61R9%&	61.9	1/4	F	S	P, R	DAL, IRC
RLR07C62R0%&	62.0	1/4	G	S	P, R	DAL, IRC
RLR07C63R4%&	63.4	1/4	F	S	P, R	DAL, IRC
RLR07C64R9%&	64.9	1/4	F	S	P, R	DAL, IRC
RLR07C66R5%&	66.5	1/4	F	S	P, R	DAL, IRC
RLR07C68R0%&	68.0	1/4	G	S	P, R	DAL, IRC
RLR07C68R1%&	68.1	1/4	F	S	P, R	DAL, IRC
RLR07C69R8%&	69.8	1/4	F	S	P, R	DAL, IRC
RLR07C71R5%&	71.5	1/4	F	S	P, R	DAL, IRC
RLR07C73R2%&	73.2	1/4	F	S	P, R	DAL, IRC
RLR07C75R0%&	75.0	1/4	F	S	P, R	DAL, IRC
RLR07C76R8%&	76.8	1/4	F	S	P, R	DAL, IRC
RLR07C78R7%&	78.7	1/4	F	S	P, R	DAL, IRC
RLR07C80R6%&	80.6	1/4	F	S	P, R	DAL, IRC
RLR07C82R0%&	82.0	1/4	G	S	P, R	DAL, IRC
RLR07C82R5%&	82.5	1/4	F	S	P, R	DAL, IRC
RLR07C84R5%&	84.5	1/4	F	S	P, R	DAL, IRC
RLR07C86R7%&	86.7	1/4	F	S	P, R	DAL, IRC
RLR07C88R7%&	88.7	1/4	F	S	P, R	DAL, IRC
RLR07C90R9%&	90.9	1/4	F	S	P, R	DAL, IRC
RLR07C91R0%&	91.0	1/4	G	S	P, R	DAL, IRC
RLR07C93R1%&	93.1	1/4	F	S	P, R	DAL, IRC
RLR07C95R3%&	95.3	1/4	F	S	P, R	DAL, IRC
RLR07C97R6%&	97.6	1/4	F	S	P, R	DAL, IRC
RLR07C1000%&	100	1/4	F, G	S	P, R	DAL, IRC
RLR07C1020%&	102	1/4	F	S	P, R	DAL, IRC
RLR07C1050%&	105	1/4	F	S	P, R	DAL, IRC
RLR07C1070%&	107	1/4	F	S	P, R	DAL, IRC
RLR07C1100%&	110	1/4	F, G	S	P, R	DAL, IRC
RLR07C1130%&	113	1/4	F	S	P, R	DAL, IRC
RLR07C1150%&	115	1/4	F	S	P, R	DAL, IRC
RLR07C1180%&	118	1/4	F	S	P, R	DAL, IRC
RLR07C1200%&	120	1/4	G	S	P, R	DAL, IRC
RLR07C1210%&	121	1/4	F	S	P, R	DAL, IRC
RLR07C1240%&	124	1/4	F	S	P, R	DAL, IRC
RLR07C1270%&	127	1/4	F	S	P, R	DAL, IRC
RLR07C1300%&	130	1/4	F, G	S	P, R	DAL, IRC
RLR07C1330%&	133	1/4	F	S	P, R	DAL, IRC
RLR07C1370%&	137	1/4	F	S	P, R	DAL, IRC
RLR07C1400%&	140	1/4	F	S	P, R	DAL, IRC
RLR07C1430%&	143	1/4	F	S	P, R	DAL, IRC
RLR07C1470%&	147	1/4	F	S	P, R	DAL, IRC
RLR07C1500%&	150	1/4	F, G	S	P, R	DAL, IRC
RLR07C1540%&	154	1/4	F	S	P, R	DAL, IRC
RLR07C1580%&	158	1/4	F	S	P, R	DAL, IRC
RLR07C1600%&	160	1/4	G	S	P, R	DAL, IRC

RLR07C1620%&	162	1/4	F	S	P, R	DAL, IRC
RLR07C1650%&	165	1/4	F	S	P, R	DAL, IRC
RLR07C1690%&	169	1/4	F	S	P, R	DAL, IRC
RLR07C1740%&	174	1/4	F	S	P, R	DAL, IRC
RLR07C1780%&	178	1/4	F	S	P, R	DAL, IRC
RLR07C1800%&	180	1/4	G	S	P, R	DAL, IRC
RLR07C1820%&	182	1/4	F	S	P, R	DAL, IRC
RLR07C1870%&	187	1/4	F	S	P, R	DAL, IRC
RLR07C1910%&	191	1/4	F	S	P, R	DAL, IRC
RLR07C1960%&	196	1/4	F	S	P, R	DAL, IRC
RLR07C2000%&	200	1/4	F, G	S	P, R	DAL, IRC
RLR07C2050%&	205	1/4	F	S	P, R	DAL, IRC
RLR07C2100%&	210	1/4	F	S	P, R	DAL, IRC
RLR07C2150%&	215	1/4	F	S	P, R	DAL, IRC
RLR07C2200%&	220	1/4	G	S	P, R	DAL, IRC
RLR07C2210%&	221	1/4	F	S	P, R	DAL, IRC
RLR07C2260%&	226	1/4	F	S	P, R	DAL, IRC
RLR07C2320%&	232	1/4	F	S	P, R	DAL, IRC
RLR07C2370%&	237	1/4	F	S	P, R	DAL, IRC
RLR07C2400%&	240	1/4	G	S	P, R	DAL, IRC
RLR07C2430%&	243	1/4	F	S	P, R	DAL, IRC
RLR07C2490%&	249	1/4	F	S	P, R	DAL, IRC
RLR07C2550%&	255	1/4	F	S	P, R	DAL, IRC
RLR07C2610%&	261	1/4	F	S	P, R	DAL, IRC
RLR07C2670%&	267	1/4	F	S	P, R	DAL, IRC
RLR07C2700%&	270	1/4	G	S	P, R	DAL, IRC
RLR07C2740%&	274	1/4	F	S	P, R	DAL, IRC
RLR07C2800%&	280	1/4	F	S	P, R	DAL, IRC
RLR07C2870%&	287	1/4	F	S	P, R	DAL, IRC
RLR07C2940%&	294	1/4	F	S	P, R	DAL, IRC
RLR07C3000%&	300	1/4	G	S	P, R	DAL, IRC
RLR07C3010%&	301	1/4	F	S	P, R	DAL, IRC
RLR07C3090%&	309	1/4	F	S	P, R	DAL, IRC
RLR07C3160%&	316	1/4	F	S	P, R	DAL, IRC
RLR07C3240%&	324	1/4	F	S	P, R	DAL, IRC
RLR07C3300%&	330	1/4	G	S	P, R	DAL, IRC
RLR07C3320%&	332	1/4	F	S	P, R	DAL, IRC
RLR07C3400%&	340	1/4	F	S	P, R	DAL, IRC
RLR07C3480%&	348	1/4	F	S	P, R	DAL, IRC
RLR07C3570%&	357	1/4	F	S	P, R	DAL, IRC
RLR07C3600%&	360	1/4	G	S	P, R	DAL, IRC
RLR07C3650%&	365	1/4	F	S	P, R	DAL, IRC
RLR07C3740%&	374	1/4	F	S	P, R	DAL, IRC
RLR07C3830%&	383	1/4	F	S	P, R	DAL, IRC
RLR07C3900%&	390	1/4	G	S	P, R	DAL, IRC
RLR07C3920%&	392	1/4	F	S	P, R	DAL, IRC
RLR07C4020%&	402	1/4	F	S	P, R	DAL, IRC

RLR07C4120%&	412	1/4	F	S	P, R	DAL, IRC
RLR07C4220%&	422	1/4	F	S	P, R	DAL, IRC
RLR07C4300%&	430	1/4	G	S	P, R	DAL, IRC
RLR07C4320%&	432	1/4	F	S	P, R	DAL, IRC
RLR07C4420%&	442	1/4	F	S	P, R	DAL, IRC
RLR07C4530%&	453	1/4	F	S	P, R	DAL, IRC
RLR07C4640%&	464	1/4	F	S	P, R	DAL, IRC
RLR07C4700%&	470	1/4	G	S	P, R	DAL, IRC
RLR07C4750%&	475	1/4	F	S	P, R	DAL, IRC
RLR07C4870%&	487	1/4	F	S	P, R	DAL, IRC
RLR07C4990%&	499	1/4	F	S	P, R	DAL, IRC
RLR07C5100%&	510	1/4	G	S	P, R	DAL, IRC
RLR07C5110%&	511	1/4	F	S	P, R	DAL, IRC
RLR07C5230%&	523	1/4	F	S	P, R	DAL, IRC
RLR07C5360%&	536	1/4	F	S	P, R	DAL, IRC
RLR07C5490%&	549	1/4	F	S	P, R	DAL, IRC
RLR07C5600%&	560	1/4	G	S	P, R	DAL, IRC
RLR07C5620%&	562	1/4	F	S	P, R	DAL, IRC
RLR07C5760%&	576	1/4	F	S	P, R	DAL, IRC
RLR07C5900%&	590	1/4	F	S	P, R	DAL, IRC
RLR07C6040%&	604	1/4	F	S	P, R	DAL, IRC
RLR07C6190%&	619	1/4	F	S	P, R	DAL, IRC
RLR07C6200%&	620	1/4	G	S	P, R	DAL, IRC
RLR07C6340%&	634	1/4	F	S	P, R	DAL, IRC
RLR07C6490%&	649	1/4	F	S	P, R	DAL, IRC
RLR07C6650%&	665	1/4	F	S	P, R	DAL, IRC
RLR07C6800%&	680	1/4	G	S	P, R	DAL, IRC
RLR07C6810%&	681	1/4	F	S	P, R	DAL, IRC
RLR07C6980%&	698	1/4	F	S	P, R	DAL, IRC
RLR07C7150%&	715	1/4	F	S	P, R	DAL, IRC
RLR07C7320%&	732	1/4	F	S	P, R	DAL, IRC
RLR07C7500%&	750	1/4	F	S	P, R	DAL, IRC
RLR07C7680%&	768	1/4	F	S	P, R	DAL, IRC
RLR07C7870%&	787	1/4	F	S	P, R	DAL, IRC
RLR07C8060%&	806	1/4	F	S	P, R	DAL, IRC
RLR07C8200%&	820	1/4	G	S	P, R	DAL, IRC
RLR07C8250%&	825	1/4	F	S	P, R	DAL, IRC
RLR07C8450%&	845	1/4	F	S	P, R	DAL, IRC
RLR07C8670%&	867	1/4	F	S	P, R	DAL, IRC
RLR07C8870%&	887	1/4	F	S	P, R	DAL, IRC
RLR07C9090%&	909	1/4	F	S	P, R	DAL, IRC
RLR07C9100%&	910	1/4	G	S	P, R	DAL, IRC
RLR07C9310%&	931	1/4	F	S	P, R	DAL, IRC
RLR07C9530%&	953	1/4	F	S	P, R	DAL, IRC
RLR07C9760%&	976	1/4	F	S	P, R	DAL, IRC
RLR07C1001%&	1,000	1/4	F, G	S	P, R	DAL, IRC
RLR07C1021%&	1,020	1/4	F	S	P, R	DAL, IRC

RLR07C1051%&	1,050	1/4	F	S	P, R	DAL, IRC
RLR07C1071%&	1,070	1/4	F	S	P, R	DAL, IRC
RLR07C1101%&	1,100	1/4	F, G	S	P, R	DAL, IRC
RLR07C1131%&	1,130	1/4	F	S	P, R	DAL, IRC
RLR07C1151%&	1,150	1/4	F	S	P, R	DAL, IRC
RLR07C1181%&	1,180	1/4	F	S	P, R	DAL, IRC
RLR07C1201%&	1,200	1/4	G	S	P, R	DAL, IRC
RLR07C1211%&	1,210	1/4	F	S	P, R	DAL, IRC
RLR07C1241%&	1,240	1/4	F	S	P, R	DAL, IRC
RLR07C1271%&	1,270	1/4	F	S	P, R	DAL, IRC
RLR07C1301%&	1,300	1/4	F, G	S	P, R	DAL, IRC
RLR07C1331%&	1,330	1/4	F	S	P, R	DAL, IRC
RLR07C1371%&	1,370	1/4	F	S	P, R	DAL, IRC
RLR07C1401%&	1,400	1/4	F	S	P, R	DAL, IRC
RLR07C1431%&	1,430	1/4	F	S	P, R	DAL, IRC
RLR07C1471%&	1,470	1/4	F	S	P, R	DAL, IRC
RLR07C1501%&	1,500	1/4	F, G	S	P, R	DAL, IRC
RLR07C1541%&	1,540	1/4	F	S	P, R	DAL, IRC
RLR07C1581%&	1,580	1/4	F	S	P, R	DAL, IRC
RLR07C1601%&	1,600	1/4	G	S	P, R	DAL, IRC
RLR07C1621%&	1,620	1/4	F	S	P, R	DAL, IRC
RLR07C1651%&	1,650	1/4	F	S	P, R	DAL, IRC
RLR07C1691%&	1,690	1/4	F	S	P, R	DAL, IRC
RLR07C1741%&	1,740	1/4	F	S	P, R	DAL, IRC
RLR07C1781%&	1,780	1/4	F	S	P, R	DAL, IRC
RLR07C1801%&	1,800	1/4	G	S	P, R	DAL, IRC
RLR07C1821%&	1,820	1/4	F	S	P, R	DAL, IRC
RLR07C1871%&	1,870	1/4	F	S	P, R	DAL, IRC
RLR07C1911%&	1,910	1/4	F	S	P, R	DAL, IRC
RLR07C1961%&	1,960	1/4	F	S	P, R	DAL, IRC
RLR07C2001%&	2,000	1/4	F, G	S	P, R	DAL, IRC
RLR07C2051%&	2,050	1/4	F	S	P, R	DAL, IRC
RLR07C2101%&	2,100	1/4	F	S	P, R	DAL, IRC
RLR07C2151%&	2,150	1/4	F	S	P, R	DAL, IRC
RLR07C2201%&	2,200	1/4	G	S	P, R	DAL, IRC
RLR07C2211%&	2,210	1/4	F	S	P, R	DAL, IRC
RLR07C2261%&	2,260	1/4	F	S	P, R	DAL, IRC
RLR07C2321%&	2,320	1/4	F	S	P, R	DAL, IRC
RLR07C2371%&	2,370	1/4	F	S	P, R	DAL, IRC
RLR07C2401%&	2,400	1/4	G	S	P, R	DAL, IRC
RLR07C2431%&	2,430	1/4	F	S	P, R	DAL, IRC
RLR07C2491%&	2,490	1/4	F	S	P, R	DAL, IRC
RLR07C2551%&	2,550	1/4	F	S	P, R	DAL, IRC
RLR07C2611%&	2,610	1/4	F	S	P, R	DAL, IRC
RLR07C2671%&	2,670	1/4	F	S	P, R	DAL, IRC
RLR07C2701%&	2,700	1/4	G	S	P, R	DAL, IRC
RLR07C2741%&	2,740	1/4	F	S	P, R	DAL, IRC

RLR07C2801%&	2,800	1/4	F	S	P, R	DAL, IRC
RLR07C2871%&	2,870	1/4	F	S	P, R	DAL, IRC
RLR07C2941%&	2,940	1/4	F	S	P, R	DAL, IRC
RLR07C3001%&	3,000	1/4	G	S	P, R	DAL, IRC
RLR07C3011%&	3,010	1/4	F	S	P, R	DAL, IRC
RLR07C3091%&	3,090	1/4	F	S	P, R	DAL, IRC
RLR07C3161%&	3,160	1/4	F	S	P, R	DAL, IRC
RLR07C3241%&	3,240	1/4	F	S	P, R	DAL, IRC
RLR07C3301%&	3,300	1/4	G	S	P, R	DAL, IRC
RLR07C3321%&	3,320	1/4	F	S	P, R	DAL, IRC
RLR07C3401%&	3,400	1/4	F	S	P, R	DAL, IRC
RLR07C3481%&	3,480	1/4	F	S	P, R	DAL, IRC
RLR07C3571%&	3,570	1/4	F	S	P, R	DAL, IRC
RLR07C3601%&	3,600	1/4	G	S	P, R	DAL, IRC
RLR07C3651%&	3,650	1/4	F	S	P, R	DAL, IRC
RLR07C3741%&	3,740	1/4	F	S	P, R	DAL, IRC
RLR07C3831%&	3,830	1/4	F	S	P, R	DAL, IRC
RLR07C3901%&	3,900	1/4	G	S	P, R	DAL, IRC
RLR07C3921%&	3,920	1/4	F	S	P, R	DAL, IRC
RLR07C4021%&	4,020	1/4	F	S	P, R	DAL, IRC
RLR07C4121%&	4,120	1/4	F	S	P, R	DAL, IRC
RLR07C4221%&	4,220	1/4	F	S	P, R	DAL, IRC
RLR07C4301%&	4,300	1/4	G	S	P, R	DAL, IRC
RLR07C4321%&	4,320	1/4	F	S	P, R	DAL, IRC
RLR07C4421%&	4,420	1/4	F	S	P, R	DAL, IRC
RLR07C4531%&	4,530	1/4	F	S	P, R	DAL, IRC
RLR07C4641%&	4,640	1/4	F	S	P, R	DAL, IRC
RLR07C4701%&	4,700	1/4	G	S	P, R	DAL, IRC
RLR07C4751%&	4,750	1/4	F	S	P, R	DAL, IRC
RLR07C4871%&	4,870	1/4	F	S	P, R	DAL, IRC
RLR07C4991%&	4,990	1/4	F	S	P, R	DAL, IRC
RLR07C5101%&	5,100	1/4	G	S	P, R	DAL, IRC
RLR07C5111%&	5,110	1/4	F	S	P, R	DAL, IRC
RLR07C5231%&	5,230	1/4	F	S	P, R	DAL, IRC
RLR07C5361%&	5,360	1/4	F	S	P, R	DAL, IRC
RLR07C5491%&	5,490	1/4	F	S	P, R	DAL, IRC
RLR07C5601%&	5,600	1/4	G	S	P, R	DAL, IRC
RLR07C5621%&	5,620	1/4	F	S	P, R	DAL, IRC
RLR07C5761%&	5,760	1/4	F	S	P, R	DAL, IRC
RLR07C5901%&	5,900	1/4	F	S	P, R	DAL, IRC
RLR07C6041%&	6,040	1/4	F	S	P, R	DAL, IRC
RLR07C6191%&	6,190	1/4	F	S	P, R	DAL, IRC
RLR07C6201%&	6,200	1/4	G	S	P, R	DAL, IRC
RLR07C6341%&	6,340	1/4	F	S	P, R	DAL, IRC
RLR07C6491%&	6,490	1/4	F	S	P, R	DAL, IRC
RLR07C6651%&	6,650	1/4	F	S	P, R	DAL, IRC
RLR07C6801%&	6,800	1/4	G	S	P, R	DAL, IRC

RLR07C6811%&	6,810	1/4	F	S	P, R	DAL, IRC
RLR07C6981%&	6,980	1/4	F	S	P, R	DAL, IRC
RLR07C7151%&	7,150	1/4	F	S	P, R	DAL, IRC
RLR07C7321%&	7,320	1/4	F	S	P, R	DAL, IRC
RLR07C7501%&	7,500	1/4	F	S	P, R	DAL, IRC
RLR07C7681%&	7,680	1/4	F	S	P, R	DAL, IRC
RLR07C7871%&	7,870	1/4	F	S	P, R	DAL, IRC
RLR07C8061%&	8,060	1/4	F	S	P, R	DAL, IRC
RLR07C8201%&	8,200	1/4	G	S	P, R	DAL, IRC
RLR07C8251%&	8,250	1/4	F	S	P, R	DAL, IRC
RLR07C8451%&	8,450	1/4	F	S	P, R	DAL, IRC
RLR07C8671%&	8,670	1/4	F	S	P, R	DAL, IRC
RLR07C8871%&	8,870	1/4	F	S	P, R	DAL, IRC
RLR07C9091%&	9,090	1/4	F	S	P, R	DAL, IRC
RLR07C9101%&	9,100	1/4	G	S	P, R	DAL, IRC
RLR07C9311%&	9,310	1/4	F	S	P, R	DAL, IRC
RLR07C9531%&	9,530	1/4	F	S	P, R	DAL, IRC
RLR07C9761%&	9,760	1/4	F	S	P, R	DAL, IRC
RLR07C1002%&	10,000	1/4	F, G	S	P, R	DAL, IRC
RLR07C1022%&	10,200	1/4	F	S	P, R	DAL, IRC
RLR07C1052%&	10,500	1/4	F	S	P, R	DAL, IRC
RLR07C1072%&	10,700	1/4	F	S	P, R	DAL, IRC
RLR07C1102%&	11,000	1/4	F, G	S	P, R	DAL, IRC
RLR07C1132%&	11,300	1/4	F	S	P, R	DAL, IRC
RLR07C1152%&	11,500	1/4	F	S	P, R	DAL, IRC
RLR07C1182%&	11,800	1/4	F	S	P, R	DAL, IRC
RLR07C1202%&	12,000	1/4	G	S	P, R	DAL, IRC
RLR07C1212%&	12,100	1/4	F	S	P, R	DAL, IRC
RLR07C1242%&	12,400	1/4	F	S	P, R	DAL, IRC
RLR07C1272%&	12,700	1/4	F	S	P, R	DAL, IRC
RLR07C1302%&	13,000	1/4	F, G	S	P, R	DAL, IRC
RLR07C1332%&	13,300	1/4	F	S	P, R	DAL, IRC
RLR07C1372%&	13,700	1/4	F	S	P, R	DAL, IRC
RLR07C1402%&	14,000	1/4	F	S	P, R	DAL, IRC
RLR07C1432%&	14,300	1/4	F	S	P, R	DAL, IRC
RLR07C1472%&	14,700	1/4	F	S	P, R	DAL, IRC
RLR07C1502%&	15,000	1/4	F, G	S	P, R	DAL, IRC
RLR07C1542%&	15,400	1/4	F	S	P, R	DAL, IRC
RLR07C1582%&	15,800	1/4	F	S	P, R	DAL, IRC
RLR07C1602%&	16,000	1/4	G	S	P, R	DAL, IRC
RLR07C1622%&	16,200	1/4	F	S	P, R	DAL, IRC
RLR07C1652%&	16,500	1/4	F	S	P, R	DAL, IRC
RLR07C1692%&	16,900	1/4	F	S	P, R	DAL, IRC
RLR07C1742%&	17,400	1/4	F	S	P, R	DAL, IRC
RLR07C1782%&	17,800	1/4	F	S	P, R	DAL, IRC
RLR07C1802%&	18,000	1/4	G	S	P, R	DAL, IRC
RLR07C1822%&	18,200	1/4	F	S	P, R	DAL, IRC

RLR07C1872%&	18,700	1/4	F	S	P, R	DAL, IRC
RLR07C1912%&	19,100	1/4	F	S	P, R	DAL, IRC
RLR07C1962%&	19,600	1/4	F	S	P, R	DAL, IRC
RLR07C2002%&	20,000	1/4	F, G	S	P, R	DAL, IRC
RLR07C2052%&	20,500	1/4	F	S	P, R	DAL, IRC
RLR07C2102%&	21,000	1/4	F	S	P, R	DAL, IRC
RLR07C2152%&	21,500	1/4	F	S	P, R	DAL, IRC
RLR07C2202%&	22,000	1/4	G	S	P, R	DAL, IRC
RLR07C2212%&	22,100	1/4	F	S	P, R	DAL, IRC
RLR07C2262%&	22,600	1/4	F	S	P, R	DAL, IRC
RLR07C2322%&	23,200	1/4	F	S	P, R	DAL, IRC
RLR07C2372%&	23,700	1/4	F	S	P, R	DAL, IRC
RLR07C2402%&	24,000	1/4	G	S	P, R	DAL, IRC
RLR07C2432%&	24,300	1/4	F	S	P, R	DAL, IRC
RLR07C2492%&	24,900	1/4	F	S	P, R	DAL, IRC
RLR07C2552%&	25,500	1/4	F	S	P, R	DAL, IRC
RLR07C2612%&	26,100	1/4	F	S	P, R	DAL, IRC
RLR07C2672%&	26,700	1/4	F	S	P, R	DAL, IRC
RLR07C2702%&	27,000	1/4	G	S	P, R	DAL, IRC
RLR07C2742%&	27,400	1/4	F	S	P, R	DAL, IRC
RLR07C2802%&	28,000	1/4	F	S	P, R	DAL, IRC
RLR07C2872%&	28,700	1/4	F	S	P, R	DAL, IRC
RLR07C2942%&	29,400	1/4	F	S	P, R	DAL, IRC
RLR07C3002%&	30,000	1/4	G	S	P, R	DAL, IRC
RLR07C3012%&	30,100	1/4	F	S	P, R	DAL, IRC
RLR07C3092%&	30,900	1/4	F	S	P, R	DAL, IRC
RLR07C3162%&	31,600	1/4	F	S	P, R	DAL, IRC
RLR07C3242%&	32,400	1/4	F	S	P, R	DAL, IRC
RLR07C3302%&	33,000	1/4	G	S	P, R	DAL, IRC
RLR07C3322%&	33,200	1/4	F	S	P, R	DAL, IRC
RLR07C3402%&	34,000	1/4	F	S	P, R	DAL, IRC
RLR07C3482%&	34,800	1/4	F	S	P, R	DAL, IRC
RLR07C3572%&	35,700	1/4	F	S	P, R	DAL, IRC
RLR07C3602%&	36,000	1/4	G	S	P, R	DAL, IRC
RLR07C3652%&	36,500	1/4	F	S	P, R	DAL, IRC
RLR07C3742%&	37,400	1/4	F	S	P, R	DAL, IRC
RLR07C3832%&	38,300	1/4	F	S	P, R	DAL, IRC
RLR07C3902%&	39,000	1/4	G	S	P, R	DAL, IRC
RLR07C3922%&	39,200	1/4	F	S	P, R	DAL, IRC
RLR07C4022%&	40,200	1/4	F	S	P, R	DAL, IRC
RLR07C4122%&	41,200	1/4	F	S	P, R	DAL, IRC
RLR07C4222%&	42,200	1/4	F	S	P, R	DAL, IRC
RLR07C4302%&	43,000	1/4	G	S	P, R	DAL, IRC
RLR07C4322%&	43,200	1/4	F	S	P, R	DAL, IRC
RLR07C4422%&	44,200	1/4	F	S	P, R	DAL, IRC
RLR07C4532%&	45,300	1/4	F	S	P, R	DAL, IRC
RLR07C4642%&	46,400	1/4	F	S	P, R	DAL, IRC

RLR07C4702%&	47,000	1/4	G	S	P, R	DAL, IRC
RLR07C4752%&	47,500	1/4	F	S	P, R	DAL, IRC
RLR07C4872%&	48,700	1/4	F	S	P, R	DAL, IRC
RLR07C4992%&	49,900	1/4	F	S	P, R	DAL, IRC
RLR07C5102%&	51,000	1/4	G	S	P, R	DAL, IRC
RLR07C5112%&	51,100	1/4	F	S	P, R	DAL, IRC
RLR07C5232%&	52,300	1/4	F	S	P, R	DAL, IRC
RLR07C5362%&	53,600	1/4	F	S	P, R	DAL, IRC
RLR07C5492%&	54,900	1/4	F	S	P, R	DAL, IRC
RLR07C5602%&	56,000	1/4	G	S	P, R	DAL, IRC
RLR07C5622%&	56,200	1/4	F	S	P, R	DAL, IRC
RLR07C5762%&	57,600	1/4	F	S	P, R	DAL, IRC
RLR07C5902%&	59,000	1/4	F	S	P, R	DAL, IRC
RLR07C6042%&	60,400	1/4	F	S	P, R	DAL, IRC
RLR07C6192%&	61,900	1/4	F	S	P, R	DAL, IRC
RLR07C6202%&	62,000	1/4	G	S	P, R	DAL, IRC
RLR07C6342%&	63,400	1/4	F	S	P, R	DAL, IRC
RLR07C6492%&	64,900	1/4	F	S	P, R	DAL, IRC
RLR07C6652%&	66,500	1/4	F	S	P, R	DAL, IRC
RLR07C6802%&	68,000	1/4	G	S	P, R	DAL, IRC
RLR07C6812%&	68,100	1/4	F	S	P, R	DAL, IRC
RLR07C6982%&	69,800	1/4	F	S	P, R	DAL, IRC
RLR07C7152%&	71,500	1/4	F	S	P, R	DAL, IRC
RLR07C7322%&	73,200	1/4	F	S	P, R	DAL, IRC
RLR07C7502%&	75,000	1/4	F	S	P, R	DAL, IRC
RLR07C7682%&	76,800	1/4	F	S	P, R	DAL, IRC
RLR07C7872%&	78,700	1/4	F	S	P, R	DAL, IRC
RLR07C8062%&	80,600	1/4	F	S	P, R	DAL, IRC
RLR07C8202%&	82,000	1/4	G	S	P, R	DAL, IRC
RLR07C8252%&	82,500	1/4	F	S	P, R	DAL, IRC
RLR07C8452%&	84,500	1/4	F	S	P, R	DAL, IRC
RLR07C8672%&	86,700	1/4	F	S	P, R	DAL, IRC
RLR07C8872%&	88,700	1/4	F	S	P, R	DAL, IRC
RLR07C9092%&	90,900	1/4	F	S	P, R	DAL, IRC
RLR07C9102%&	91,000	1/4	G	S	P, R	DAL, IRC
RLR07C9312%&	93,100	1/4	F	S	P, R	DAL, IRC
RLR07C9532%&	95,300	1/4	F	S	P, R	DAL, IRC
RLR07C9762%&	97,600	1/4	F	S	P, R	DAL, IRC
RLR07C1003%&	100,000	1/4	F, G	S	P, R	DAL, IRC
RLR07C1023%&	102,000	1/4	F	S	P, R	DAL, IRC
RLR07C1053%&	105,000	1/4	F	S	P, R	DAL, IRC
RLR07C1073%&	107,000	1/4	F	S	P, R	DAL, IRC
RLR07C1103%&	110,000	1/4	F, G	S	P, R	DAL, IRC
RLR07C1133%&	113,000	1/4	F	S	P, R	DAL, IRC
RLR07C1153%&	115,000	1/4	F	S	P, R	DAL, IRC
RLR07C1183%&	118,000	1/4	F	S	P, R	DAL, IRC
RLR07C1203%&	120,000	1/4	G	S	P, R	DAL, IRC

RLR07C1213%&	121,000	1/4	F	S	P, R	DAL, IRC
RLR07C1243%&	124,000	1/4	F	S	P, R	DAL, IRC
RLR07C1273%&	127,000	1/4	F	S	P, R	DAL, IRC
RLR07C1303%&	130,000	1/4	F, G	S	P, R	DAL, IRC
RLR07C1333%&	133,000	1/4	F	S	P, R	DAL, IRC
RLR07C1373%&	137,000	1/4	F	S	P, R	DAL, IRC
RLR07C1403%&	140,000	1/4	F	S	P, R	DAL, IRC
RLR07C1433%&	143,000	1/4	F	S	P, R	DAL, IRC
RLR07C1473%&	147,000	1/4	F	S	P, R	DAL, IRC
RLR07C1503%&	150,000	1/4	F, G	S	P, R	DAL, IRC
RLR07C1543%&	154,000	1/4	F	S	P, R	DAL, IRC
RLR07C1583%&	158,000	1/4	F	S	P, R	DAL, IRC
RLR07C1603%&	160,000	1/4	G	S	P, R	DAL, IRC
RLR07C1623%&	162,000	1/4	F	S	P, R	DAL, IRC
RLR07C1653%&	165,000	1/4	F	S	P, R	DAL, IRC
RLR07C1693%&	169,000	1/4	F	S	P, R	DAL, IRC
RLR07C1743%&	174,000	1/4	F	S	P, R	DAL, IRC
RLR07C1783%&	178,000	1/4	F	S	P, R	DAL, IRC
RLR07C1803%&	180,000	1/4	G	S	P, R	DAL, IRC
RLR07C1823%&	182,000	1/4	F	S	P, R	DAL, IRC
RLR07C1873%&	187,000	1/4	F	S	P, R	DAL, IRC
RLR07C1913%&	191,000	1/4	F	S	P, R	DAL, IRC
RLR07C1963%&	196,000	1/4	F	S	P, R	DAL, IRC
RLR07C2003%&	200,000	1/4	F, G	S	P, R	DAL, IRC
RLR07C2053%&	205,000	1/4	F	S	P, R	DAL, IRC
RLR07C2103%&	210,000	1/4	F	S	P, R	DAL, IRC
RLR07C2153%&	215,000	1/4	F	S	P, R	DAL, IRC
RLR07C2203%&	220,000	1/4	G	S	P, R	DAL, IRC
RLR07C2213%&	221,000	1/4	F	S	P, R	DAL, IRC
RLR07C2263%&	226,000	1/4	F	S	P, R	DAL, IRC
RLR07C2323%&	232,000	1/4	F	S	P, R	DAL, IRC
RLR07C2373%&	237,000	1/4	F	S	P, R	DAL, IRC
RLR07C2403%&	240,000	1/4	G	S	P, R	DAL, IRC
RLR07C2433%&	243,000	1/4	F	S	P, R	DAL, IRC
RLR07C2493%&	249,000	1/4	F	S	P, R	DAL, IRC
RLR07C2553%&	255,000	1/4	F	S	P, R	DAL, IRC
RLR07C2613%&	261,000	1/4	F	S	P, R	DAL, IRC
RLR07C2673%&	267,000	1/4	F	S	P, R	DAL, IRC
RLR07C2703%&	270,000	1/4	G	S	P, R	DAL, IRC
RLR07C2743%&	274,000	1/4	F	S	P, R	DAL, IRC
RLR07C2803%&	280,000	1/4	F	S	P, R	DAL, IRC
RLR07C2873%&	287,000	1/4	F	S	P, R	DAL, IRC
RLR07C2943%&	294,000	1/4	F	S	P, R	DAL, IRC
RLR07C3003%&	300,000	1/4	G	S	P, R	DAL, IRC
RLR07C3013%&	301,000	1/4	F	S	P, R	DAL, IRC
RLR07C3093%&	309,000	1/4	F	S	P, R	DAL, IRC
RLR07C3163%&	316,000	1/4	F	S	P, R	DAL, IRC

RLR07C3243%&	324,000	1/4	F	S	P, R	DAL, IRC
RLR07C3303%&	330,000	1/4	G	S	P, R	DAL, IRC
RLR07C3323%&	332,000	1/4	F	S	P, R	DAL, IRC
RLR07C3403%&	340,000	1/4	F	S	P, R	DAL, IRC
RLR07C3483%&	348,000	1/4	F	S	P, R	DAL, IRC
RLR07C3573%&	357,000	1/4	F	S	P, R	DAL, IRC
RLR07C3603%&	360,000	1/4	G	S	P, R	DAL, IRC
RLR07C3653%&	365,000	1/4	F	S	P, R	DAL, IRC
RLR07C3743%&	374,000	1/4	F	S	P, R	DAL, IRC
RLR07C3833%&	383,000	1/4	F	S	P, R	DAL, IRC
RLR07C3903%&	390,000	1/4	G	S	P, R	DAL, IRC
RLR07C3923%&	392,000	1/4	F	S	P, R	DAL, IRC
RLR07C4023%&	402,000	1/4	F	S	P, R	DAL, IRC
RLR07C4123%&	412,000	1/4	F	S	P, R	DAL, IRC
RLR07C4223%&	422,000	1/4	F	S	P, R	DAL, IRC
RLR07C4303%&	430,000	1/4	G	S	P, R	DAL, IRC
RLR07C4323%&	432,000	1/4	F	S	P, R	DAL, IRC
RLR07C4423%&	442,000	1/4	F	S	P, R	DAL, IRC
RLR07C4533%&	453,000	1/4	F	S	P, R	DAL, IRC
RLR07C4643%&	464,000	1/4	F	S	P, R	DAL, IRC
RLR07C4703%&	470,000	1/4	G	S	P, R	DAL, IRC
RLR07C4753%&	475,000	1/4	F	S	P, R	DAL, IRC
RLR07C4873%&	487,000	1/4	F	S	P, R	DAL, IRC
RLR07C4993%&	499,000	1/4	F	S	P, R	DAL, IRC
RLR07C5103%&	510,000	1/4	G	S	P, R	DAL, IRC
RLR07C5113%&	511,000	1/4	F	S	P, R	DAL, IRC
RLR07C5233%&	523,000	1/4	F	S	P, R	DAL, IRC
RLR07C5363%&	536,000	1/4	F	S	P, R	DAL, IRC
RLR07C5493%&	549,000	1/4	F	S	P, R	DAL, IRC
RLR07C5603%&	560,000	1/4	G	S	P, R	DAL, IRC
RLR07C5623%&	562,000	1/4	F	S	P, R	DAL, IRC
RLR07C5763%&	576,000	1/4	F	S	P, R	DAL, IRC
RLR07C5903%&	590,000	1/4	F	S	P, R	DAL, IRC
RLR07C6043%&	604,000	1/4	F	S	P, R	DAL, IRC
RLR07C6193%&	619,000	1/4	F	S	P, R	DAL, IRC
RLR07C6203%&	620,000	1/4	G	S	P, R	DAL, IRC
RLR07C6343%&	634,000	1/4	F	S	P, R	DAL, IRC
RLR07C6493%&	649,000	1/4	F	S	P, R	DAL, IRC
RLR07C6653%&	665,000	1/4	F	S	P, R	DAL, IRC
RLR07C6803%&	680,000	1/4	G	S	P, R	DAL, IRC
RLR07C6813%&	681,000	1/4	F	S	P, R	DAL, IRC
RLR07C6983%&	698,000	1/4	F	S	P, R	DAL, IRC
RLR07C7153%&	715,000	1/4	F	S	P, R	DAL, IRC
RLR07C7323%&	732,000	1/4	F	S	P, R	DAL, IRC
RLR07C7503%&	750,000	1/4	F	S	P, R	DAL, IRC
RLR07C7683%&	768,000	1/4	F	S	P, R	DAL, IRC
RLR07C7873%&	787,000	1/4	F	S	P, R	DAL, IRC

RLR07C8063%&	806,000	1/4	F	S	P, R	DAL, IRC
RLR07C8203%&	820,000	1/4	G	S	P, R	DAL, IRC
RLR07C8253%&	825,000	1/4	F	S	P, R	DAL, IRC
RLR07C8453%&	845,000	1/4	F	S	P, R	DAL, IRC
RLR07C8673%&	867,000	1/4	F	S	P, R	DAL, IRC
RLR07C8873%&	887,000	1/4	F	S	P, R	DAL, IRC
RLR07C9093%&	909,000	1/4	F	S	P, R	DAL, IRC
RLR07C9103%&	910,000	1/4	G	S	P, R	DAL, IRC
RLR07C9313%&	931,000	1/4	F	S	P, R	DAL, IRC
RLR07C9533%&	953,000	1/4	F	S	P, R	DAL, IRC
RLR07C9763%&	976,000	1/4	F	S	P, R	DAL, IRC
RLR07C1004%&	1,000,000	1/4	F, G	S	P, R	DAL, IRC
RLR07C1024%&	1,020,000	1/4	F	S	P, R	DAL, IRC
RLR07C1054%&	1,050,000	1/4	F	S	P, R	DAL, IRC
RLR07C1074%&	1,070,000	1/4	F	S	P, R	DAL, IRC
RLR07C1104%&	1,100,000	1/4	F, G	S	P, R	DAL, IRC
RLR07C1134%&	1,130,000	1/4	F	S	P, R	DAL, IRC
RLR07C1154%&	1,150,000	1/4	F	S	P, R	DAL, IRC
RLR07C1184%&	1,180,000	1/4	F	S	P, R	DAL, IRC
RLR07C1204%&	1,200,000	1/4	G	S	P, R	DAL, IRC
RLR07C1214%&	1,210,000	1/4	F	S	P, R	DAL, IRC
RLR07C1244%&	1,240,000	1/4	F	S	P, R	DAL, IRC
RLR07C1274%&	1,270,000	1/4	F	S	P, R	DAL, IRC
RLR07C1304%&	1,300,000	1/4	F, G	S	P, R	DAL, IRC
RLR07C1334%&	1,330,000	1/4	F	S	P, R	DAL, IRC
RLR07C1374%&	1,370,000	1/4	F	S	P, R	DAL, IRC
RLR07C1404%&	1,400,000	1/4	F	S	P, R	DAL, IRC
RLR07C1434%&	1,430,000	1/4	F	S	P, R	DAL, IRC
RLR07C1474%&	1,470,000	1/4	F	S	P, R	DAL, IRC
RLR07C1504%&	1,500,000	1/4	F, G	S	P, R	DAL, IRC
RLR07C1544%&	1,540,000	1/4	F	S	P, R	DAL, IRC
RLR07C1584%&	1,580,000	1/4	F	S	P, R	DAL, IRC
RLR07C1604%&	1,600,000	1/4	G	S	P, R	DAL, IRC
RLR07C1624%&	1,620,000	1/4	F	S	P, R	DAL, IRC
RLR07C1654%&	1,650,000	1/4	F	S	P, R	DAL, IRC
RLR07C1694%&	1,690,000	1/4	F	S	P, R	DAL, IRC
RLR07C1744%&	1,740,000	1/4	F	S	P, R	DAL, IRC
RLR07C1784%&	1,780,000	1/4	F	S	P, R	DAL, IRC
RLR07C1804%&	1,800,000	1/4	G	S	P, R	DAL, IRC
RLR07C1824%&	1,820,000	1/4	F	S	P, R	DAL, IRC
RLR07C1874%&	1,870,000	1/4	F	S	P, R	DAL, IRC
RLR07C1914%&	1,910,000	1/4	F	S	P, R	DAL, IRC
RLR07C1964%&	1,960,000	1/4	F	S	P, R	DAL, IRC
RLR07C2004%&	2,000,000	1/4	F, G	S	P, R	DAL, IRC
RLR07C2054%&	2,050,000	1/4	F	S	P, R	DAL, IRC
RLR07C2104%&	2,100,000	1/4	F	S	P, R	DAL, IRC
RLR07C2154%&	2,150,000	1/4	F	S	P, R	DAL, IRC

RLR07C2204%&	2,200,000	1/4	G	S	P, R	DAL, IRC
RLR07C2214%&	2,210,000	1/4	F	S	P, R	DAL, IRC
RLR07C2264%&	2,260,000	1/4	F	S	P, R	DAL, IRC
RLR07C2324%&	2,320,000	1/4	F	S	P, R	DAL, IRC
RLR07C2374%&	2,370,000	1/4	F	S	P, R	DAL, IRC
RLR07C2404%&	2,400,000	1/4	G	S	P, R	DAL, IRC
RLR07C2434%&	2,430,000	1/4	F	S	P, R	DAL, IRC
RLR07C2494%&	2,490,000	1/4	F	S	P, R	DAL, IRC
RLR07C2554%&	2,550,000	1/4	F	S	P, R	DAL, IRC
RLR07C2614%&	2,610,000	1/4	F	S	P, R	DAL, IRC
RLR07C2674%&	2,670,000	1/4	F	S	P, R	DAL, IRC
RLR07C2704%&	2,700,000	1/4	G	S	P, R	DAL, IRC
RLR07C2744%&	2,740,000	1/4	F	S	P, R	DAL, IRC
RLR07C2804%&	2,800,000	1/4	F	S	P, R	DAL, IRC
RLR07C2874%&	2,870,000	1/4	F	S	P, R	DAL, IRC
RLR07C2944%&	2,940,000	1/4	F	S	P, R	DAL, IRC
RLR07C3004%&	3,000,000	1/4	G	S	P, R	DAL, IRC
RLR07C3014%&	3,010,000	1/4	F	S	P, R	DAL, IRC
RLR07C3094%&	3,090,000	1/4	F	-	P, R	DAL
RLR07C3164%&	3,160,000	1/4	F	-	P, R	DAL
RLR07C3244%&	3,240,000	1/4	F	-	P, R	DAL
RLR07C3304%&	3,300,000	1/4	G	-	P, R	DAL
RLR07C3324%&	3,320,000	1/4	F	-	P, R	DAL
RLR07C3404%&	3,400,000	1/4	F	-	P, R	DAL
RLR07C3484%&	3,480,000	1/4	F	-	P, R	DAL
RLR07C3574%&	3,570,000	1/4	F	-	P, R	DAL
RLR07C3604%&	3,600,000	1/4	G	-	P, R	DAL
RLR07C3654%&	3,650,000	1/4	F	-	P, R	DAL
RLR07C3744%&	3,740,000	1/4	F	-	P, R	DAL
RLR07C3834%&	3,830,000	1/4	F	-	P, R	DAL
RLR07C3904%&	3,900,000	1/4	G	-	P, R	DAL
RLR07C3924%&	3,920,000	1/4	F	-	P, R	DAL
RLR07C4024%&	4,020,000	1/4	F	-	P, R	DAL
RLR07C4124%&	4,120,000	1/4	F	-	P, R	DAL
RLR07C4224%&	4,220,000	1/4	F	-	P, R	DAL
RLR07C4304%&	4,300,000	1/4	G	-	P, R	DAL
RLR07C4324%&	4,320,000	1/4	F	-	P, R	DAL
RLR07C4424%&	4,420,000	1/4	F	-	P, R	DAL
RLR07C4534%&	4,530,000	1/4	F	-	P, R	DAL
RLR07C4644%&	4,640,000	1/4	F	-	P, R	DAL
RLR07C4704%&	4,700,000	1/4	G	-	P, R	DAL
RLR07C4754%&	4,750,000	1/4	F	-	P, R	DAL
RLR07C4874%&	4,870,000	1/4	F	-	P, R	DAL
RLR07C4994%&	4,990,000	1/4	F	-	P, R	DAL
RLR07C5104%&	5,100,000	1/4	G	-	P, R	DAL
RLR07C5114%&	5,110,000	1/4	F	-	P, R	DAL
RLR07C5234%&	5,230,000	1/4	F	-	P, R	DAL

RLR07C5364%&	5,360,000	1/4	F	-	P, R	DAL
RLR07C5494%&	5,490,000	1/4	F	-	P, R	DAL
RLR07C5604%&	5,600,000	1/4	G	-	P, R	DAL
RLR07C5624%&	5,620,000	1/4	F	-	P, R	DAL
RLR07C5764%&	5,760,000	1/4	F	-	P, R	DAL
RLR07C5904%&	5,900,000	1/4	F	-	P, R	DAL
RLR07C6044%&	6,040,000	1/4	F	-	P, R	DAL
RLR07C6194%&	6,190,000	1/4	F	-	P, R	DAL
RLR07C6204%&	6,200,000	1/4	G	-	P, R	DAL
RLR07C6344%&	6,340,000	1/4	F	-	P, R	DAL
RLR07C6494%&	6,490,000	1/4	F	-	P, R	DAL
RLR07C6654%&	6,650,000	1/4	F	-	P, R	DAL
RLR07C6804%&	6,800,000	1/4	G	-	P, R	DAL
RLR07C6814%&	6,810,000	1/4	F	-	P, R	DAL
RLR07C6984%&	6,980,000	1/4	F	-	P, R	DAL
RLR07C7154%&	7,150,000	1/4	F	-	P, R	DAL
RLR07C7324%&	7,320,000	1/4	F	-	P, R	DAL
RLR07C7504%&	7,500,000	1/4	F	-	P, R	DAL
RLR07C7684%&	7,680,000	1/4	F	-	P, R	DAL
RLR07C7874%&	7,870,000	1/4	F	-	P, R	DAL
RLR07C8064%&	8,060,000	1/4	F	-	P, R	DAL
RLR07C8204%&	8,200,000	1/4	G	-	P, R	DAL
RLR07C8254%&	8,250,000	1/4	F	-	P, R	DAL
RLR07C8454%&	8,450,000	1/4	F	-	P, R	DAL
RLR07C8674%&	8,670,000	1/4	F	-	P, R	DAL
RLR07C8874%&	8,870,000	1/4	F	-	P, R	DAL
RLR07C9094%&	9,080,000	1/4	F	-	P, R	DAL
RLR07C9104%&	9,100,000	1/4	G	-	P, R	DAL
RLR07C9314%&	9,310,000	1/4	F	-	P, R	DAL
RLR07C9534%&	9,530,000	1/4	F	-	P, R	DAL
RLR07C9764%&	9,760,000	1/4	F	-	P, R	DAL
RLR07C1005%&	10,000,000	1/4	F, G	-	P, R	DAL
RLR07C1105%&	11,000,000	1/4	G	-	P, R	DAL
RLR07C1205%&	12,000,000	1/4	G	-	P, R	DAL
RLR07C1305%&	13,000,000	1/4	G	-	P, R	DAL
RLR07C1505%&	15,000,000	1/4	G	-	P, R	DAL
RLR07C1605%&	16,000,000	1/4	G	-	P, R	DAL
RLR07C1805%&	18,000,000	1/4	G	-	P, R	DAL
RLR07C2005%&	20,000,000	1/4	G	-	P, R	DAL
RLR07C2205%&	22,000,000	1/4	G	-	P, R	DAL

RLR07 RESISTORS DECADE BREAKDOWN

Click on the link below to see the associated parts selection listing:

Resistance Range

10.0 Ohms through 97.6 Ohms
100 Ohms through 976 Ohms
1,000 Ohms through 9,760 Ohms
10,000 Ohms through 97,600 Ohms
100,000 Ohms through 976,000 Ohms
1,000,000 Ohms through 9,760,000 Ohms
10,000,000 Ohms through 22,000,000 Ohms

RLR07 Film Resistors: 10.0 Ohms through 97.6 Ohms

	Resistance	Power	Resistance	Level 1	Level 2	
Part Number	Value (Ohms)	Rating (W)	Tolerance (%)	(FRL)(&)	(FRL)(&)	Manufacturer
RLR07C10R0%&	10.0	1/4	F, G	S	P, R	DAL, IRC
RLR07C10R2%&	10.2	1/4	F	S	P, R	DAL, IRC
RLR07C10R5%&	10.5	1/4	F	S	P, R	DAL, IRC
RLR07C10R7%&	10.7	1/4	F	S	P, R	DAL, IRC
RLR07C11R0%&	11.0	1/4	F, G	S	P, R	DAL, IRC
RLR07C11R3%&	11.3	1/4	F	S	P, R	DAL, IRC
RLR07C11R5%&	11.5	1/4	F	S	P, R	DAL, IRC
RLR07C11R8%&	11.8	1/4	F	S	P, R	DAL, IRC
RLR07C12R0%&	12.0	1/4	G	S	P, R	DAL, IRC
RLR07C12R1%&	12.1	1/4	F	S	P, R	DAL, IRC
RLR07C12R4%&	12.4	1/4	F	S	P, R	DAL, IRC
RLR07C12R7%&	12.7	1/4	F	S	P, R	DAL, IRC
RLR07C13R0%&	13.0	1/4	F, G	S	P, R	DAL, IRC
RLR07C13R3%&	13.3	1/4	F	S	P, R	DAL, IRC
	Resistance	Power	Resistance	Level 1	Level 2	
Part Number	Value (Ohms)	Rating (W)	Tolerance (%)	(FRL)(&)	(FRL)(&)	Manufacturer
RLR07C13R7%&	13.7	1/4	F	S	P, R	DAL, IRC
RLR07C14R0%&	14.0	1/4	F	S	P, R	DAL, IRC
RLR07C14R3%&	14.3	1/4	F	S	P, R	DAL, IRC
RLR07C14R7%&	14.7	1/4	F	S	P, R	DAL, IRC
RLR07C15R0%&	15.0	1/4	F, G	S	P, R	DAL, IRC
RLR07C15R4%&	15.4	1/4	F	S	P, R	DAL, IRC
RLR07C15R8%&	15.8	1/4	F	S	P, R	DAL, IRC
RLR07C16R0%&	16.0	1/4	G	S	P, R	DAL, IRC
RLR07C16R2%&	16.2	1/4	F	S	P, R	DAL, IRC
RLR07C16R5%&	16.5	1/4	F	S	P, R	DAL, IRC
RLR07C16R9%&	16.9	1/4	F	S	P, R	DAL, IRC
RLR07C17R4%&	17.4	1/4	F	S	P, R	DAL, IRC
RLR07C17R8%&	17.8	1/4	F	S	P, R	DAL, IRC
RLR07C18R0%&	18.0	1/4	G	S	P, R	DAL, IRC
	Resistance	Power	Resistance	Level 1	Level 2	
Part Number	Value (Ohms)	Rating (W)	Tolerance (%)	(FRL)(&)	(FRL)(&)	Manufacturer
RLR07C18R2%&	18.2	1/4	F	S	P, R	DAL, IRC

RLR07C18R7%&	18.7	1/4	F	S	P, R	DAL, IRC
RLR07C19R1%&	19.1	1/4	F	S	P, R	DAL, IRC
RLR07C19R6%&	19.6	1/4	F	S	P, R	DAL, IRC
RLR07C20R0%&	20.0	1/4	F, G	S	P, R	DAL, IRC
RLR07C20R5%&	20.5	1/4	F	S	P, R	DAL, IRC
RLR07C21R0%&	21.0	1/4	F	S	P, R	DAL, IRC
RLR07C21R5%&	21.5	1/4	F	S	P, R	DAL, IRC
RLR07C22R0%&	22.0	1/4	G	S	P, R	DAL, IRC
RLR07C22R1%&	22.1	1/4	F	S	P, R	DAL, IRC
RLR07C22R6%&	22.6	1/4	F	S	P, R	DAL, IRC
RLR07C23R2%&	23.2	1/4	F	S	P, R	DAL, IRC
RLR07C23R7%&	23.7	1/4	F	S	P, R	DAL, IRC
RLR07C24R0%&	24.0	1/4	G	S	P, R	DAL, IRC
	Resistance	Power	Resistance	Level 1	Level 2	
Part Number	Value (Ohms)	Rating (W)	Tolerance (%)	(FRL)(&)	(FRL)(&)	Manufacturer
RLR07C24R3%&	24.3	1/4	F	S	P, R	DAL, IRC
RLR07C24R9%&	24.9	1/4	F	S	P, R	DAL, IRC
RLR07C25R5%&	25.5	1/4	F	S	P, R	DAL, IRC
RLR07C26R1%&	26.1	1/4	F	S	P, R	DAL, IRC
RLR07C26R7%&	26.7	1/4	F	S	P, R	DAL, IRC
RLR07C27R0%&	27.0	1/4	G	S	P, R	DAL, IRC
RLR07C27R4%&	27.4	1/4	F	S	P, R	DAL, IRC
RLR07C28R0%&	28.0	1/4	F	S	P, R	DAL, IRC
RLR07C28R7%&	28.7	1/4	F	S	P, R	DAL, IRC
RLR07C29R4%&	29.4	1/4	F	S	P, R	DAL, IRC
RLR07C30R0%&	30.0	1/4	G	S	P, R	DAL, IRC
RLR07C30R1%&	30.1	1/4	F	S	P, R	DAL, IRC
	Resistance	Power	Resistance	Level 1	Level 2	
Part Number	Value (Ohms)	Rating (W)	Tolerance (%)	(FRL)(&)	(FRL)(&)	Manufacturer
RLR07C30R9%&	30.9	1/4	F	S	P, R	DAL, IRC
RLR07C31R6%&	31.6	1/4	F	S	P, R	DAL, IRC
RLR07C32R4%&	32.4	1/4	F	S	P, R	DAL, IRC
RLR07C33R0%&	33.0	1/4	G	S	P, R	DAL, IRC
RLR07C33R2%&	33.2	1/4	F	S	P, R	DAL, IRC
RLR07C34R0%&	34.0	1/4	F	S	P, R	DAL, IRC
RLR07C34R8%&	34.8	1/4	F	S	P, R	DAL, IRC
RLR07C35R7%&	35.7	1/4	F	S	P, R	DAL, IRC
RLR07C36R0%&	36.0	1/4	G	S	P, R	DAL, IRC
RLR07C36R5%&	36.5	1/4	F	S	P, R	DAL, IRC
RLR07C37R4%&	37.4	1/4	F	S	P, R	DAL, IRC
RLR07C38R3%&	38.3	1/4	F	S	P, R	DAL, IRC
RLR07C39R0%&	39.0	1/4	G	S	P, R	DAL, IRC
RLR07C39R2%&	39.2	1/4	F	S	P, R	DAL, IRC
	Resistance	Power	Resistance	Level 1	Level 2	
Part Number	Value (Ohms)	Rating (W)	Tolerance (%)	(FRL)(&)	(FRL)(&)	Manufacturer
RLR07C40R2%&	40.2	1/4	F	S	P, R	DAL, IRC
RLR07C41R2%&	41.2	1/4	F	S	P, R	DAL, IRC

RLR07C42R2%&	42.2	1/4	F	S	P, R	DAL, IRC
RLR07C43R0%&	43.0	1/4	G	S	P, R	DAL, IRC
RLR07C43R2%&	43.2	1/4	F	S	P, R	DAL, IRC
RLR07C44R2%&	44.2	1/4	F	S	P, R	DAL, IRC
RLR07C45R3%&	45.3	1/4	F	S	P, R	DAL, IRC
RLR07C46R4%&	46.4	1/4	F	S	P, R	DAL, IRC
RLR07C47R0%&	47.0	1/4	G	S	P, R	DAL, IRC
RLR07C47R5%&	47.5	1/4	F	S	P, R	DAL, IRC
RLR07C48R7%&	48.7	1/4	F	S	P, R	DAL, IRC
RLR07C49R9%&	49.9	1/4	F	S	P, R	DAL, IRC
RLR07C51R0%&	51.0	1/4	G	S	P, R	DAL, IRC
RLR07C51R1%&	51.1	1/4	F	S	P, R	DAL, IRC
	Resistance	Power	Resistance	Level 1	Level 2	
Part Number	Value (Ohms)	Rating (W)	Tolerance (%)	(FRL)(&)	(FRL)(&)	Manufacturer
RLR07C52R3%&	52.3	1/4	F	S	P, R	DAL, IRC
RLR07C53R6%&	53.6	1/4	F	S	P, R	DAL, IRC
RLR07C54R9%&	54.9	1/4	F	S	P, R	DAL, IRC
RLR07C56R0%&	56.0	1/4	G	S	P, R	DAL, IRC
RLR07C56R2%&	56.2	1/4	F	S	P, R	DAL, IRC
RLR07C57R6%&	57.6	1/4	F	S	P, R	DAL, IRC
RLR07C59R0%&	59.0	1/4	F	S	P, R	DAL, IRC
RLR07C60R4%&	60.4	1/4	F	S	P, R	DAL, IRC
RLR07C61R9%&	61.9	1/4	F	S	P, R	DAL, IRC
RLR07C62R0%&	62.0	1/4	G	S	P, R	DAL, IRC
RLR07C63R4%&	63.4	1/4	F	S	P, R	DAL, IRC
RLR07C64R9%&	64.9	1/4	F	S	P, R	DAL, IRC
RLR07C66R5%&	66.5	1/4	F	S	P, R	DAL, IRC
RLR07C68R0%&	68.0	1/4	G	S	P, R	DAL, IRC
	Resistance	Power	Resistance	Level 1	Level 2	
Part Number	Value (Ohms)	Rating (W)	Tolerance (%)	(FRL)(&)	(FRL)(&)	Manufacturer
RLR07C68R1%&	68.1	1/4	F	S	P, R	DAL, IRC
RLR07C69R8%&	69.8	1/4	F	S	P, R	DAL, IRC
RLR07C71R5%&	71.5	1/4	F	S	P, R	DAL, IRC
RLR07C73R2%&	73.2	1/4	F	S	P, R	DAL, IRC
RLR07C75R0%&	75.0	1/4	F	S	P, R	DAL, IRC
RLR07C76R8%&	76.8	1/4	F	S	P, R	DAL, IRC
RLR07C78R7%&	78.7	1/4	F	S	P, R	DAL, IRC
RLR07C80R6%&	80.6	1/4	F	S	P, R	DAL, IRC
RLR07C82R0%&	82.0	1/4	G	S	P, R	DAL, IRC
RLR07C82R5%&	82.5	1/4	F	S	P, R	DAL, IRC
RLR07C84R5%&	84.5	1/4	F	S	P, R	DAL, IRC
RLR07C86R7%&	86.7	1/4	F	S	P, R	DAL, IRC
RLR07C88R7%&	88.7	1/4	F	S	P, R	DAL, IRC
RLR07C90R9%&	90.9	1/4	F	S	P, R	DAL, IRC
	Resistance	Power	Resistance	Level 1	Level 2	
Part Number	Value (Ohms)	Rating (W)	Tolerance (%)	(FRL)(&)	(FRL)(&)	Manufacturer
RLR07C91R0%&	91.0	1/4	G	S	P, R	DAL, IRC

RLR07C93R1%&	93.1	1/4	F	S	P, R	DAL, IRC
RLR07C95R3%&	95.3	1/4	F	S	P, R	DAL, IRC
RLR07C97R6%&	97.6	1/4	F	S	P, R	DAL, IRC

RLR07 Film Resistors: 100 Ohms through 976 Ohms

	Resistance	Power	Resistance	Level 1	Level 2	
Part Number	Value (Ohms)	Rating (W)	Tolerance (%)	(FRL)(&)	(FRL)(&)	Manufacturer
RLR07C1000%&	100	1/4	F, G	S	P, R	DAL, IRC
RLR07C1020%&	102	1/4	F	S	P, R	DAL, IRC
RLR07C1050%&	105	1/4	F	S	P, R	DAL, IRC
RLR07C1070%&	107	1/4	F	S	P, R	DAL, IRC
RLR07C1100%&	110	1/4	F, G	S	P, R	DAL, IRC
RLR07C1130%&	113	1/4	F	S	P, R	DAL, IRC
RLR07C1150%&	115	1/4	F	S	P, R	DAL, IRC
RLR07C1180%&	118	1/4	F	S	P, R	DAL, IRC
RLR07C1200%&	120	1/4	G	S	P, R	DAL, IRC
RLR07C1210%&	121	1/4	F	S	P, R	DAL, IRC
RLR07C1240%&	124	1/4	F	S	P, R	DAL, IRC
RLR07C1270%&	127	1/4	F	S	P, R	DAL, IRC
RLR07C1300%&	130	1/4	F, G	S	P, R	DAL, IRC
RLR07C1330%&	133	1/4	F	S	P, R	DAL, IRC
	Resistance	Power	Resistance	Level 1	Level 2	
Part Number	Value (Ohms)	Rating (W)	Tolerance (%)	(FRL)(&)	(FRL)(&)	Manufacturer
RLR07C1370%&	137	1/4	F	S	P, R	DAL, IRC
RLR07C1400%&	140	1/4	F	S	P, R	DAL, IRC
RLR07C1430%&	143	1/4	F	S	P, R	DAL, IRC
RLR07C1470%&	147	1/4	F	S	P, R	DAL, IRC
RLR07C1500%&	150	1/4	F, G	S	P, R	DAL, IRC
RLR07C1540%&	154	1/4	F	S	P, R	DAL, IRC
RLR07C1580%&	158	1/4	F	S	P, R	DAL, IRC
RLR07C1600%&	160	1/4	G	S	P, R	DAL, IRC
RLR07C1620%&	162	1/4	F	S	P, R	DAL, IRC
RLR07C1650%&	165	1/4	F	S	P, R	DAL, IRC
RLR07C1690%&	169	1/4	F	S	P, R	DAL, IRC
RLR07C1740%&	174	1/4	F	S	P, R	DAL, IRC
RLR07C1780%&	178	1/4	F	S	P, R	DAL, IRC
RLR07C1800%&	180	1/4	G	S	P, R	DAL, IRC
	Resistance	Power	Resistance	Level 1	Level 2	
Part Number	Value (Ohms)	Rating (W)	Tolerance (%)	(FRL)(&)	(FRL)(&)	Manufacturer
RLR07C1820%&	182	1/4	F	S	P, R	DAL, IRC
RLR07C1870%&	187	1/4	F	S	P, R	DAL, IRC
RLR07C1910%&	191	1/4	F	S	P, R	DAL, IRC
RLR07C1960%&	196	1/4	F	S	P, R	DAL, IRC
RLR07C2000%&	200	1/4	F, G	S	P, R	DAL, IRC

RLR07C2050%&	205	1/4	F	S	P, R	DAL, IRC
RLR07C2100%&	210	1/4	F	S	P, R	DAL, IRC
RLR07C2150%&	215	1/4	F	S	P, R	DAL, IRC
RLR07C2200%&	220	1/4	G	S	P, R	DAL, IRC
RLR07C2210%&	221	1/4	F	S	P, R	DAL, IRC
RLR07C2260%&	226	1/4	F	S	P, R	DAL, IRC
RLR07C2320%&	232	1/4	F	S	P, R	DAL, IRC
RLR07C2370%&	237	1/4	F	S	P, R	DAL, IRC
RLR07C2400%&	240	1/4	G	S	P, R	DAL, IRC
	Resistance	Power	Resistance	Level 1	Level 2	
Part Number	Value (Ohms)	Rating (W)	Tolerance (%)	(FRL)(&)	(FRL)(&)	Manufacturer
RLR07C2430%&	243	1/4	F	S	P, R	DAL, IRC
RLR07C2490%&	249	1/4	F	S	P, R	DAL, IRC
RLR07C2550%&	255	1/4	F	S	P, R	DAL, IRC
RLR07C2610%&	261	1/4	F	S	P, R	DAL, IRC
RLR07C2670%&	267	1/4	F	S	P, R	DAL, IRC
RLR07C2700%&	270	1/4	G	S	P, R	DAL, IRC
RLR07C2740%&	274	1/4	F	S	P, R	DAL, IRC
RLR07C2800%&	280	1/4	F	S	P, R	DAL, IRC
RLR07C2870%&	287	1/4	F	S	P, R	DAL, IRC
RLR07C2940%&	294	1/4	F	S	P, R	DAL, IRC
RLR07C3000%&	300	1/4	G	S	P, R	DAL, IRC
RLR07C3010%&	301	1/4	F	S	P, R	DAL, IRC
	Resistance	Power	Resistance	Level 1	Level 2	
Part Number	Value (Ohms)	Rating (W)	Tolerance (%)	(FRL)(&)	(FRL)(&)	Manufacturer
RLR07C3090%&	309	1/4	F	S	P, R	DAL, IRC
RLR07C3160%&	316	1/4	F	S	P, R	DAL, IRC
RLR07C3240%&	324	1/4	F	S	P, R	DAL, IRC
RLR07C3300%&	330	1/4	G	S	P, R	DAL, IRC
RLR07C3320%&	332	1/4	F	S	P, R	DAL, IRC
RLR07C3400%&	340	1/4	F	S	P, R	DAL, IRC
RLR07C3480%&	348	1/4	F	S	P, R	DAL, IRC
RLR07C3570%&	357	1/4	F	S	P, R	DAL, IRC
RLR07C3600%&	360	1/4	G	S	P, R	DAL, IRC
RLR07C3650%&	365	1/4	F	S	P, R	DAL, IRC
RLR07C3740%&	374	1/4	F	S	P, R	DAL, IRC
RLR07C3830%&	383	1/4	F	S	P, R	DAL, IRC
RLR07C3900%&	390	1/4	G	S	P, R	DAL, IRC
RLR07C3920%&	392	1/4	F	S	P, R	DAL, IRC
	Resistance	Power	Resistance	Level 1	Level 2	
Part Number	Value (Ohms)	Rating (W)	Tolerance (%)	(FRL)(&)	(FRL)(&)	Manufacturer
RLR07C4020%&	402	1/4	F	S	P, R	DAL, IRC
RLR07C4120%&	412	1/4	F	S	P, R	DAL, IRC
RLR07C4220%&	422	1/4	F	S	P, R	DAL, IRC
RLR07C4300%&	430	1/4	G	S	P, R	DAL, IRC
RLR07C4320%&	432	1/4	F	S	P, R	DAL, IRC
RLR07C4420%&	442	1/4	F	S	P, R	DAL, IRC

RLR07C4530%&	453	1/4	F	S	P, R	DAL, IRC
RLR07C4640%&	464	1/4	F	S	P, R	DAL, IRC
RLR07C4700%&	470	1/4	G	S	P, R	DAL, IRC
RLR07C4750%&	475	1/4	F	S	P, R	DAL, IRC
RLR07C4870%&	487	1/4	F	S	P, R	DAL, IRC
RLR07C4990%&	499	1/4	F	S	P, R	DAL, IRC
RLR07C5100%&	510	1/4	G	S	P, R	DAL, IRC
RLR07C5110%&	511	1/4	F	S	P, R	DAL, IRC
	Resistance	Power	Resistance	Level 1	Level 2	
Part Number	Value (Ohms)	Rating (W)	Tolerance (%)	(FRL)(&)	(FRL)(&)	Manufacturer
RLR07C5230%&	523	1/4	F	S	P, R	DAL, IRC
RLR07C5360%&	536	1/4	F	S	P, R	DAL, IRC
RLR07C5490%&	549	1/4	F	S	P, R	DAL, IRC
RLR07C5600%&	560	1/4	G	S	P, R	DAL, IRC
RLR07C5620%&	562	1/4	F	S	P, R	DAL, IRC
RLR07C5760%&	576	1/4	F	S	P, R	DAL, IRC
RLR07C5900%&	590	1/4	F	S	P, R	DAL, IRC
RLR07C6040%&	604	1/4	F	S	P, R	DAL, IRC
RLR07C6190%&	619	1/4	F	S	P, R	DAL, IRC
RLR07C6200%&	620	1/4	G	S	P, R	DAL, IRC
RLR07C6340%&	634	1/4	F	S	P, R	DAL, IRC
RLR07C6490%&	649	1/4	F	S	P, R	DAL, IRC
RLR07C6650%&	665	1/4	F	S	P, R	DAL, IRC
RLR07C6800%&	680	1/4	G	S	P, R	DAL, IRC
	Resistance	Power	Resistance	Level 1	Level 2	
Part Number	Value (Ohms)	Rating (W)	Tolerance (%)	(FRL)(&)	(FRL)(&)	Manufacturer
RLR07C6810%&	681	1/4	F	S	P, R	DAL, IRC
RLR07C6980%&	698	1/4	F	S	P, R	DAL, IRC
RLR07C7150%&	715	1/4	F	S	P, R	DAL, IRC
RLR07C7320%&	732	1/4	F	S	P, R	DAL, IRC
RLR07C7500%&	750	1/4	F	S	P, R	DAL, IRC
RLR07C7680%&	768	1/4	F	S	P, R	DAL, IRC
RLR07C7870%&	787	1/4	F	S	P, R	DAL, IRC
RLR07C8060%&	806	1/4	F	S	P, R	DAL, IRC
RLR07C8200%&	820	1/4	G	S	P, R	DAL, IRC
RLR07C8250%&	825	1/4	F	S	P, R	DAL, IRC
RLR07C8450%&	845	1/4	F	S	P, R	DAL, IRC
RLR07C8670%&	867	1/4	F	S	P, R	DAL, IRC
RLR07C8870%&	887	1/4	F	S	P, R	DAL, IRC
RLR07C9090%&	909	1/4	F	S	P, R	DAL, IRC
	Resistance	Power	Resistance	Level 1	Level 2	
Part Number	Value (Ohms)	Rating (W)	Tolerance (%)	(FRL)(&)	(FRL)(&)	Manufacturer
RLR07C9100%&	910	1/4	G	S	P, R	DAL, IRC
RLR07C9310%&	931	1/4	F	S	P, R	DAL, IRC
RLR07C9530%&	953	1/4	F	S	P, R	DAL, IRC
RLR07C9760%&	976	1/4	F	S	P, R	DAL, IRC

RLR07 Film Resistors: 1,000 Ohms through 9,760 Ohms

	Resistance	Power	Resistance	Level 1	Level 2	
Part Number	Value (Ohms)	Rating (W)	Tolerance (%)	(FRL)(&)	(FRL)(&)	Manufacturer
RLR07C1001%&	1,000	1/4	F, G	S	P, R	DAL, IRC
RLR07C1021%&	1,020	1/4	F	S	P, R	DAL, IRC
RLR07C1051%&	1,050	1/4	F	S	P, R	DAL, IRC
RLR07C1071%&	1,070	1/4	F	S	P, R	DAL, IRC
RLR07C1101%&	1,100	1/4	F, G	S	P, R	DAL, IRC
RLR07C1131%&	1,130	1/4	F	S	P, R	DAL, IRC
RLR07C1151%&	1,150	1/4	F	S	P, R	DAL, IRC
RLR07C1181%&	1,180	1/4	F	S	P, R	DAL, IRC
RLR07C1201%&	1,200	1/4	G	S	P, R	DAL, IRC
RLR07C1211%&	1,210	1/4	F	S	P, R	DAL, IRC
RLR07C1241%&	1,240	1/4	F	S	P, R	DAL, IRC
RLR07C1271%&	1,270	1/4	F	S	P, R	DAL, IRC
RLR07C1301%&	1,300	1/4	F, G	S	P, R	DAL, IRC
RLR07C1331%&	1,330	1/4	F	S	P, R	DAL, IRC
	Resistance	Power	Resistance	Level 1	Level 2	
Part Number	Value (Ohms)	Rating (W)	Tolerance (%)	(FRL)(&)	(FRL)(&)	Manufacturer
RLR07C1371%&	1,370	1/4	F	S	P, R	DAL, IRC
RLR07C1401%&	1,400	1/4	F	S	P, R	DAL, IRC
RLR07C1431%&	1,430	1/4	F	S	P, R	DAL, IRC
RLR07C1471%&	1,470	1/4	F	S	P, R	DAL, IRC
RLR07C1501%&	1,500	1/4	F, G	S	P, R	DAL, IRC
RLR07C1541%&	1,540	1/4	F	S	P, R	DAL, IRC
RLR07C1581%&	1,580	1/4	F	S	P, R	DAL, IRC
RLR07C1601%&	1,600	1/4	G	S	P, R	DAL, IRC
RLR07C1621%&	1,620	1/4	F	S	P, R	DAL, IRC
RLR07C1651%&	1,650	1/4	F	S	P, R	DAL, IRC
RLR07C1691%&	1,690	1/4	F	S	P, R	DAL, IRC
RLR07C1741%&	1,740	1/4	F	S	P, R	DAL, IRC
RLR07C1781%&	1,780	1/4	F	S	P, R	DAL, IRC
RLR07C1801%&	1,800	1/4	G	S	P, R	DAL, IRC
	Resistance	Power	Resistance	Level 1	Level 2	
Part Number	Value (Ohms)	Rating (W)	Tolerance (%)	(FRL)(&)	(FRL)(&)	Manufacturer
RLR07C1821%&	1,820	1/4	F	S	P, R	DAL, IRC
RLR07C1871%&	1,870	1/4	F	S	P, R	DAL, IRC
RLR07C1911%&	1,910	1/4	F	S	P, R	DAL, IRC
RLR07C1961%&	1,960	1/4	F	S	P, R	DAL, IRC
RLR07C2001%&	2,000	1/4	F, G	S	P, R	DAL, IRC
RLR07C2051%&	2,050	1/4	F	S	P, R	DAL, IRC
RLR07C2101%&	2,100	1/4	F	S	P, R	DAL, IRC
RLR07C2151%&	2,150	1/4	F	S	P, R	DAL, IRC

RLR07C2201%&	2,200	1/4	G	S	P, R	DAL, IRC
RLR07C2211%&	2,210	1/4	F	S	P, R	DAL, IRC
RLR07C2261%&	2,260	1/4	F	S	P, R	DAL, IRC
RLR07C2321%&	2,320	1/4	F	S	P, R	DAL, IRC
RLR07C2371%&	2,370	1/4	F	S	P, R	DAL, IRC
RLR07C2401%&	2,400	1/4	G	S	P, R	DAL, IRC
	Resistance	Power	Resistance	Level 1	Level 2	
Part Number	Value (Ohms)	Rating (W)	Tolerance (%)	(FRL)(&)	(FRL)(&)	Manufacturer
RLR07C2431%&	2,430	1/4	F	S	P, R	DAL, IRC
RLR07C2491%&	2,490	1/4	F	S	P, R	DAL, IRC
RLR07C2551%&	2,550	1/4	F	S	P, R	DAL, IRC
RLR07C2611%&	2,610	1/4	F	S	P, R	DAL, IRC
RLR07C2671%&	2,670	1/4	F	S	P, R	DAL, IRC
RLR07C2701%&	2,700	1/4	G	S	P, R	DAL, IRC
RLR07C2741%&	2,740	1/4	F	S	P, R	DAL, IRC
RLR07C2801%&	2,800	1/4	F	S	P, R	DAL, IRC
RLR07C2871%&	2,870	1/4	F	S	P, R	DAL, IRC
RLR07C2941%&	2,940	1/4	F	S	P, R	DAL, IRC
RLR07C3001%&	3,000	1/4	G	S	P, R	DAL, IRC
RLR07C3011%&	3,010	1/4	F	S	P, R	DAL, IRC
	Resistance	Power	Resistance	Level 1	Level 2	
Part Number	Value (Ohms)	Rating (W)	Tolerance (%)	(FRL)(&)	(FRL)(&)	Manufacturer
RLR07C3091%&	3,090	1/4	F	S	P, R	DAL, IRC
RLR07C3161%&	3,160	1/4	F	S	P, R	DAL, IRC
RLR07C3241%&	3,240	1/4	F	S	P, R	DAL, IRC
RLR07C3301%&	3,300	1/4	G	S	P, R	DAL, IRC
RLR07C3321%&	3,320	1/4	F	S	P, R	DAL, IRC
RLR07C3401%&	3,400	1/4	F	S	P, R	DAL, IRC
RLR07C3481%&	3,480	1/4	F	S	P, R	DAL, IRC
RLR07C3571%&	3,570	1/4	F	S	P, R	DAL, IRC
RLR07C3601%&	3,600	1/4	G	S	P, R	DAL, IRC
RLR07C3651%&	3,650	1/4	F	S	P, R	DAL, IRC
RLR07C3741%&	3,740	1/4	F	S	P, R	DAL, IRC
RLR07C3831%&	3,830	1/4	F	S	P, R	DAL, IRC
RLR07C3901%&	3,900	1/4	G	S	P, R	DAL, IRC
RLR07C3921%&	3,920	1/4	F	S	P, R	DAL, IRC
	Resistance	Power	Resistance	Level 1	Level 2	
Part Number	Value (Ohms)	Rating (W)	Tolerance (%)	(FRL)(&)	(FRL)(&)	Manufacturer
RLR07C4021%&	4,020	1/4	F	S	P, R	DAL, IRC
RLR07C4121%&	4,120	1/4	F	S	P, R	DAL, IRC
RLR07C4221%&	4,220	1/4	F	S	P, R	DAL, IRC
RLR07C4301%&	4,300	1/4	G	S	P, R	DAL, IRC
RLR07C4321%&	4,320	1/4	F	S	P, R	DAL, IRC
RLR07C4421%&	4,420	1/4	F	S	P, R	DAL, IRC
RLR07C4531%&	4,530	1/4	F	S	P, R	DAL, IRC
RLR07C4641%&	4,640	1/4	F	S	P, R	DAL, IRC
RLR07C4701%&	4,700	1/4	G	S	P, R	DAL, IRC

RLR07C4751%&	4,750	1/4	F	S	P, R	DAL, IRC
RLR07C4871%&	4,870	1/4	F	S	P, R	DAL, IRC
RLR07C4991%&	4,990	1/4	F	S	P, R	DAL, IRC
RLR07C5101%&	5,100	1/4	G	S	P, R	DAL, IRC
RLR07C5111%&	5,110	1/4	F	S	P, R	DAL, IRC
	Resistance	Power	Resistance	Level 1	Level 2	
Part Number	Value (Ohms)	Rating (W)	Tolerance (%)	(FRL)(&)	(FRL)(&)	Manufacturer
RLR07C5231%&	5,230	1/4	F	S	P, R	DAL, IRC
RLR07C5361%&	5,360	1/4	F	S	P, R	DAL, IRC
RLR07C5491%&	5,490	1/4	F	S	P, R	DAL, IRC
RLR07C5601%&	5,600	1/4	G	S	P, R	DAL, IRC
RLR07C5621%&	5,620	1/4	F	S	P, R	DAL, IRC
RLR07C5761%&	5,760	1/4	F	S	P, R	DAL, IRC
RLR07C5901%&	5,900	1/4	F	S	P, R	DAL, IRC
RLR07C6041%&	6,040	1/4	F	S	P, R	DAL, IRC
RLR07C6191%&	6,190	1/4	F	S	P, R	DAL, IRC
RLR07C6201%&	6,200	1/4	G	S	P, R	DAL, IRC
RLR07C6341%&	6,340	1/4	F	S	P, R	DAL, IRC
RLR07C6491%&	6,490	1/4	F	S	P, R	DAL, IRC
RLR07C6651%&	6,650	1/4	F	S	P, R	DAL, IRC
RLR07C6801%&	6,800	1/4	G	S	P, R	DAL, IRC
	Resistance	Power	Resistance	Level 1	Level 2	
Part Number	Value (Ohms)	Rating (W)	Tolerance (%)	(FRL)(&)	(FRL)(&)	Manufacturer
RLR07C6811%&	6,810	1/4	F	S	P, R	DAL, IRC
RLR07C6981%&	6,980	1/4	F	S	P, R	DAL, IRC
RLR07C7151%&	7,150	1/4	F	S	P, R	DAL, IRC
RLR07C7321%&	7,320	1/4	F	S	P, R	DAL, IRC
RLR07C7501%&	7,500	1/4	F	S	P, R	DAL, IRC
RLR07C7681%&	7,680	1/4	F	S	P, R	DAL, IRC
RLR07C7871%&	7,870	1/4	F	S	P, R	DAL, IRC
RLR07C8061%&	8,060	1/4	F	S	P, R	DAL, IRC
RLR07C8201%&	8,200	1/4	G	S	P, R	DAL, IRC
RLR07C8251%&	8,250	1/4	F	S	P, R	DAL, IRC
RLR07C8451%&	8,450	1/4	F	S	P, R	DAL, IRC
RLR07C8671%&	8,670	1/4	F	S	P, R	DAL, IRC
RLR07C8871%&	8,870	1/4	F	S	P, R	DAL, IRC
RLR07C9091%&	9,090	1/4	F	S	P, R	DAL, IRC
	Resistance	Power	Resistance	Level 1	Level 2	
Part Number	Value (Ohms)	Rating (W)	Tolerance (%)	(FRL)(&)	(FRL)(&)	Manufacturer
RLR07C9101%&	9,100	1/4	G	S	P, R	DAL, IRC
RLR07C9311%&	9,310	1/4	F	S	P, R	DAL, IRC
RLR07C9531%&	9,530	1/4	F	S	P, R	DAL, IRC
RLR07C9761%&	9,760	1/4	F	S	P, R	DAL, IRC

RLR07 Film Resistors: 10,000 Ohms through 97,600 Ohms

	Resistance	Power	Resistance	Level 1	Level 2	
Part Number	Value (Ohms)	Rating (W)	Tolerance (%)	(FRL)(&)	(FRL)(&)	Manufacturer
RLR07C1002%&	10,000	1/4	F, G	S	P, R	DAL, IRC
RLR07C1022%&	10,200	1/4	F	S	P, R	DAL, IRC
RLR07C1052%&	10,500	1/4	F	S	P, R	DAL, IRC
RLR07C1072%&	10,700	1/4	F	S	P, R	DAL, IRC
RLR07C1102%&	11,000	1/4	F, G	S	P, R	DAL, IRC
RLR07C1132%&	11,300	1/4	F	S	P, R	DAL, IRC
RLR07C1152%&	11,500	1/4	F	S	P, R	DAL, IRC
RLR07C1182%&	11,800	1/4	F	S	P, R	DAL, IRC
RLR07C1202%&	12,000	1/4	G	S	P, R	DAL, IRC
RLR07C1212%&	12,100	1/4	F	S	P, R	DAL, IRC
RLR07C1242%&	12,400	1/4	F	S	P, R	DAL, IRC
RLR07C1272%&	12,700	1/4	F	S	P, R	DAL, IRC
RLR07C1302%&	13,000	1/4	F, G	S	P, R	DAL, IRC
RLR07C1332%&	13,300	1/4	F	S	P, R	DAL, IRC
	Resistance	Power	Resistance	Level 1	Level 2	
Part Number	Value (Ohms)	Rating (W)	Tolerance (%)	(FRL)(&)	(FRL)(&)	Manufacturer
RLR07C1372%&	13,700	1/4	F	S	P, R	DAL, IRC
RLR07C1402%&	14,000	1/4	F	S	P, R	DAL, IRC
RLR07C1432%&	14,300	1/4	F	S	P, R	DAL, IRC
RLR07C1472%&	14,700	1/4	F	S	P, R	DAL, IRC
RLR07C1502%&	15,000	1/4	F, G	S	P, R	DAL, IRC
RLR07C1542%&	15,400	1/4	F	S	P, R	DAL, IRC
RLR07C1582%&	15,800	1/4	F	S	P, R	DAL, IRC
RLR07C1602%&	16,000	1/4	G	S	P, R	DAL, IRC
RLR07C1622%&	16,200	1/4	F	S	P, R	DAL, IRC
RLR07C1652%&	16,500	1/4	F	S	P, R	DAL, IRC
RLR07C1692%&	16,900	1/4	F	S	P, R	DAL, IRC
RLR07C1742%&	17,400	1/4	F	S	P, R	DAL, IRC
RLR07C1782%&	17,800	1/4	F	S	P, R	DAL, IRC
RLR07C1802%&	18,000	1/4	G	S	P, R	DAL, IRC
	Resistance	Power	Resistance	Level 1	Level 2	
Part Number	Value (Ohms)	Rating (W)	Tolerance (%)	(FRL)(&)	(FRL)(&)	Manufacturer
RLR07C1822%&	18,200	1/4	F	S	P, R	DAL, IRC
RLR07C1872%&	18,700	1/4	F	S	P, R	DAL, IRC
RLR07C1912%&	19,100	1/4	F	S	P, R	DAL, IRC
RLR07C1962%&	19,600	1/4	F	S	P, R	DAL, IRC
RLR07C2002%&	20,000	1/4	F, G	S	P, R	DAL, IRC
RLR07C2052%&	20,500	1/4	F	S	P, R	DAL, IRC
RLR07C2102%&	21,000	1/4	F	S	P, R	DAL, IRC
RLR07C2152%&	21,500	1/4	F	S	P, R	DAL, IRC
RLR07C2202%&	22,000	1/4	G	S	P, R	DAL, IRC
RLR07C2212%&	22,100	1/4	F	S	P, R	DAL, IRC
RLR07C2262%&	22,600	1/4	F	S	P, R	DAL, IRC

RLR07C2322%&	23,200	1/4	F	S	P, R	DAL, IRC
RLR07C2372%&	23,700	1/4	F	S	P, R	DAL, IRC
RLR07C2402%&	24,000	1/4	G	S	P, R	DAL, IRC
	Resistance	Power	Resistance	Level 1	Level 2	
Part Number	Value (Ohms)	Rating (W)	Tolerance (%)	(FRL)(&)	(FRL)(&)	Manufacturer
RLR07C2432%&	24,300	1/4	F	S	P, R	DAL, IRC
RLR07C2492%&	24,900	1/4	F	S	P, R	DAL, IRC
RLR07C2552%&	25,500	1/4	F	S	P, R	DAL, IRC
RLR07C2612%&	26,100	1/4	F	S	P, R	DAL, IRC
RLR07C2672%&	26,700	1/4	F	S	P, R	DAL, IRC
RLR07C2702%&	27,000	1/4	G	S	P, R	DAL, IRC
RLR07C2742%&	27,400	1/4	F	S	P, R	DAL, IRC
RLR07C2802%&	28,000	1/4	F	S	P, R	DAL, IRC
RLR07C2872%&	28,700	1/4	F	S	P, R	DAL, IRC
RLR07C2942%&	29,400	1/4	F	S	P, R	DAL, IRC
RLR07C3002%&	30,000	1/4	G	S	P, R	DAL, IRC
RLR07C3012%&	30,100	1/4	F	S	P, R	DAL, IRC
	Resistance	Power	Resistance	Level 1	Level 2	
Part Number	Value (Ohms)	Rating (W)	Tolerance (%)	(FRL)(&)	(FRL)(&)	Manufacturer
RLR07C3092%&	30,900	1/4	F	S	P, R	DAL, IRC
RLR07C3162%&	31,600	1/4	F	S	P, R	DAL, IRC
RLR07C3242%&	32,400	1/4	F	S	P, R	DAL, IRC
RLR07C3302%&	33,000	1/4	G	S	P, R	DAL, IRC
RLR07C3322%&	33,200	1/4	F	S	P, R	DAL, IRC
RLR07C3402%&	34,000	1/4	F	S	P, R	DAL, IRC
RLR07C3482%&	34,800	1/4	F	S	P, R	DAL, IRC
RLR07C3572%&	35,700	1/4	F	S	P, R	DAL, IRC
RLR07C3602%&	36,000	1/4	G	S	P, R	DAL, IRC
RLR07C3652%&	36,500	1/4	F	S	P, R	DAL, IRC
RLR07C3742%&	37,400	1/4	F	S	P, R	DAL, IRC
RLR07C3832%&	38,300	1/4	F	S	P, R	DAL, IRC
RLR07C3902%&	39,000	1/4	G	S	P, R	DAL, IRC
RLR07C3922%&	39,200	1/4	F	S	P, R	DAL, IRC
	Resistance	Power	Resistance	Level 1	Level 2	
Part Number	Value (Ohms)	Rating (W)	Tolerance (%)	(FRL)(&)	(FRL)(&)	Manufacturer
RLR07C4022%&	40,200	1/4	F	S	P, R	DAL, IRC
RLR07C4122%&	41,200	1/4	F	S	P, R	DAL, IRC
RLR07C4222%&	42,200	1/4	F	S	P, R	DAL, IRC
RLR07C4302%&	43,000	1/4	G	S	P, R	DAL, IRC
RLR07C4322%&	43,200	1/4	F	S	P, R	DAL, IRC
RLR07C4422%&	44,200	1/4	F	S	P, R	DAL, IRC
RLR07C4532%&	45,300	1/4	F	S	P, R	DAL, IRC
RLR07C4642%&	46,400	1/4	F	S	P, R	DAL, IRC
RLR07C4702%&	47,000	1/4	G	S	P, R	DAL, IRC
RLR07C4752%&	47,500	1/4	F	S	P, R	DAL, IRC
RLR07C4872%&	48,700	1/4	F	S	P, R	DAL, IRC
RLR07C4992%&	49,900	1/4	F	S	P, R	DAL, IRC

RLR07C5102%&	51,000	1/4	G	S	P, R	DAL, IRC
RLR07C5112%&	51,100	1/4	F	S	P, R	DAL, IRC
	Resistance	Power	Resistance	Level 1	Level 2	
Part Number	Value (Ohms)	Rating (W)	Tolerance (%)	(FRL)(&)	(FRL)(&)	Manufacturer
RLR07C5232%&	52,300	1/4	F	S	P, R	DAL, IRC
RLR07C5362%&	53,600	1/4	F	S	P, R	DAL, IRC
RLR07C5492%&	54,900	1/4	F	S	P, R	DAL, IRC
RLR07C5602%&	56,000	1/4	G	S	P, R	DAL, IRC
RLR07C5622%&	56,200	1/4	F	S	P, R	DAL, IRC
RLR07C5762%&	57,600	1/4	F	S	P, R	DAL, IRC
RLR07C5902%&	59,000	1/4	F	S	P, R	DAL, IRC
RLR07C6042%&	60,400	1/4	F	S	P, R	DAL, IRC
RLR07C6192%&	61,900	1/4	F	S	P, R	DAL, IRC
RLR07C6202%&	62,000	1/4	G	S	P, R	DAL, IRC
RLR07C6342%&	63,400	1/4	F	S	P, R	DAL, IRC
RLR07C6492%&	64,900	1/4	F	S	P, R	DAL, IRC
RLR07C6652%&	66,500	1/4	F	S	P, R	DAL, IRC
RLR07C6802%&	68,000	1/4	G	S	P, R	DAL, IRC
	Resistance	Power	Resistance	Level 1	Level 2	
Part Number	Value (Ohms)	Rating (W)	Tolerance (%)	(FRL)(&)	(FRL)(&)	Manufacturer
RLR07C6812%&	68,100	1/4	F	S	P, R	DAL, IRC
RLR07C6982%&	69,800	1/4	F	S	P, R	DAL, IRC
RLR07C7152%&	71,500	1/4	F	S	P, R	DAL, IRC
RLR07C7322%&	73,200	1/4	F	S	P, R	DAL, IRC
RLR07C7502%&	75,000	1/4	F	S	P, R	DAL, IRC
RLR07C7682%&	76,800	1/4	F	S	P, R	DAL, IRC
RLR07C7872%&	78,700	1/4	F	S	P, R	DAL, IRC
RLR07C8062%&	80,600	1/4	F	S	P, R	DAL, IRC
RLR07C8202%&	82,000	1/4	G	S	P, R	DAL, IRC
RLR07C8252%&	82,500	1/4	F	S	P, R	DAL, IRC
RLR07C8452%&	84,500	1/4	F	S	P, R	DAL, IRC
RLR07C8672%&	86,700	1/4	F	S	P, R	DAL, IRC
RLR07C8872%&	88,700	1/4	F	S	P, R	DAL, IRC
RLR07C9092%&	90,900	1/4	F	S	P, R	DAL, IRC
	Resistance	Power	Resistance	Level 1	Level 2	
Part Number	Value (Ohms)	Rating (W)	Tolerance (%)	(FRL)(&)	(FRL)(&)	Manufacturer
RLR07C9102%&	91,000	1/4	G	S	P, R	DAL, IRC
RLR07C9312%&	93,100	1/4	F	S	P, R	DAL, IRC
RLR07C9532%&	95,300	1/4	F	S	P, R	DAL, IRC
RLR07C9762%&	97,600	1/4	F	S	P, R	DAL, IRC

RLR07 Film Resistors: 100,000 Ohms through 976,000 Ohms

	Resistance	Power	Resistance	Level 1	Level 2	
Part Number	Value (Ohms)	Rating (W)	Tolerance (%)	(FRL)(&)	(FRL)(&)	Manufacturer

RLR07C1003%&	100,000	1/4	F, G	S	P, R	DAL, IRC
RLR07C1023%&	102,000	1/4	F	S	P, R	DAL, IRC
RLR07C1053%&	105,000	1/4	F	S	P, R	DAL, IRC
RLR07C1073%&	107,000	1/4	F	S	P, R	DAL, IRC
RLR07C1103%&	110,000	1/4	F, G	S	P, R	DAL, IRC
RLR07C1133%&	113,000	1/4	F	S	P, R	DAL, IRC
RLR07C1153%&	115,000	1/4	F	S	P, R	DAL, IRC
RLR07C1183%&	118,000	1/4	F	S	P, R	DAL, IRC
RLR07C1203%&	120,000	1/4	G	S	P, R	DAL, IRC
RLR07C1213%&	121,000	1/4	F	S	P, R	DAL, IRC
RLR07C1243%&	124,000	1/4	F	S	P, R	DAL, IRC
RLR07C1273%&	127,000	1/4	F	S	P, R	DAL, IRC
RLR07C1303%&	130,000	1/4	F, G	S	P, R	DAL, IRC
RLR07C1333%&	133,000	1/4	F	S	P, R	DAL, IRC
	Resistance	Power	Resistance	Level 1	Level 2	
Part Number	Value (Ohms)	Rating (W)	Tolerance (%)	(FRL)(&)	(FRL)(&)	Manufacturer
RLR07C1373%&	137,000	1/4	F	S	P, R	DAL, IRC
RLR07C1403%&	140,000	1/4	F	S	P, R	DAL, IRC
RLR07C1433%&	143,000	1/4	F	S	P, R	DAL, IRC
RLR07C1473%&	147,000	1/4	F	S	P, R	DAL, IRC
RLR07C1503%&	150,000	1/4	F, G	S	P, R	DAL, IRC
RLR07C1543%&	154,000	1/4	F	S	P, R	DAL, IRC
RLR07C1583%&	158,000	1/4	F	S	P, R	DAL, IRC
RLR07C1603%&	160,000	1/4	G	S	P, R	DAL, IRC
RLR07C1623%&	162,000	1/4	F	S	P, R	DAL, IRC
RLR07C1653%&	165,000	1/4	F	S	P, R	DAL, IRC
RLR07C1693%&	169,000	1/4	F	S	P, R	DAL, IRC
RLR07C1743%&	174,000	1/4	F	S	P, R	DAL, IRC
RLR07C1783%&	178,000	1/4	F	S	P, R	DAL, IRC
RLR07C1803%&	180,000	1/4	G	S	P, R	DAL, IRC
	Resistance	Power	Resistance	Level 1	Level 2	
Part Number	Value (Ohms)	Rating (W)	Tolerance (%)	(FRL)(&)	(FRL)(&)	Manufacturer
RLR07C1823%&	182,000	1/4	F	S	P, R	DAL, IRC
RLR07C1873%&	187,000	1/4	F	S	P, R	DAL, IRC
RLR07C1913%&	191,000	1/4	F	S	P, R	DAL, IRC
RLR07C1963%&	196,000	1/4	F	S	P, R	DAL, IRC
RLR07C2003%&	200,000	1/4	F, G	S	P, R	DAL, IRC
RLR07C2053%&	205,000	1/4	F	S	P, R	DAL, IRC
RLR07C2103%&	210,000	1/4	F	S	P, R	DAL, IRC
RLR07C2153%&	215,000	1/4	F	S	P, R	DAL, IRC
RLR07C2203%&	220,000	1/4	G	S	P, R	DAL, IRC
RLR07C2213%&	221,000	1/4	F	S	P, R	DAL, IRC
RLR07C2263%&	226,000	1/4	F	S	P, R	DAL, IRC
RLR07C2323%&	232,000	1/4	F	S	P, R	DAL, IRC
RLR07C2373%&	237,000	1/4	F	S	P, R	DAL, IRC
RLR07C2403%&	240,000	1/4	G	S	P, R	DAL, IRC
	Resistance	Power	Resistance	Level 1	Level 2	

Part Number	Value (Ohms)	Rating (W)	Tolerance (%)	(FRL)(&)	(FRL)(&)	Manufacturer
RLR07C2433%&	243,000	1/4	F	S	P, R	DAL, IRC
RLR07C2493%&	249,000	1/4	F	S	P, R	DAL, IRC
RLR07C2553%&	255,000	1/4	F	S	P, R	DAL, IRC
RLR07C2613%&	261,000	1/4	F	S	P, R	DAL, IRC
RLR07C2673%&	267,000	1/4	F	S	P, R	DAL, IRC
RLR07C2703%&	270,000	1/4	G	S	P, R	DAL, IRC
RLR07C2743%&	274,000	1/4	F	S	P, R	DAL, IRC
RLR07C2803%&	280,000	1/4	F	S	P, R	DAL, IRC
RLR07C2873%&	287,000	1/4	F	S	P, R	DAL, IRC
RLR07C2943%&	294,000	1/4	F	S	P, R	DAL, IRC
RLR07C3003%&	300,000	1/4	G	S	P, R	DAL, IRC
RLR07C3013%&	301,000	1/4	F	S	P, R	DAL, IRC
	Resistance	Power	Resistance	Level 1	Level 2	
Part Number	Value (Ohms)	Rating (W)	Tolerance (%)	(FRL)(&)	(FRL)(&)	Manufacturer
RLR07C3093%&	309,000	1/4	F	S	P, R	DAL, IRC
RLR07C3163%&	316,000	1/4	F	S	P, R	DAL, IRC
RLR07C3243%&	324,000	1/4	F	S	P, R	DAL, IRC
RLR07C3303%&	330,000	1/4	G	S	P, R	DAL, IRC
RLR07C3323%&	332,000	1/4	F	S	P, R	DAL, IRC
RLR07C3403%&	340,000	1/4	F	S	P, R	DAL, IRC
RLR07C3483%&	348,000	1/4	F	S	P, R	DAL, IRC
RLR07C3573%&	357,000	1/4	F	S	P, R	DAL, IRC
RLR07C3603%&	360,000	1/4	G	S	P, R	DAL, IRC
RLR07C3653%&	365,000	1/4	F	S	P, R	DAL, IRC
RLR07C3743%&	374,000	1/4	F	S	P, R	DAL, IRC
RLR07C3833%&	383,000	1/4	F	S	P, R	DAL, IRC
RLR07C3903%&	390,000	1/4	G	S	P, R	DAL, IRC
RLR07C3923%&	392,000	1/4	F	S	P, R	DAL, IRC
	Resistance	Power	Resistance	Level 1	Level 2	
Part Number	Value (Ohms)	Rating (W)	Tolerance (%)	(FRL)(&)	(FRL)(&)	Manufacturer
RLR07C4023%&	402,000	1/4	F	S	P, R	DAL, IRC
RLR07C4123%&	412,000	1/4	F	S	P, R	DAL, IRC
RLR07C4223%&	422,000	1/4	F	S	P, R	DAL, IRC
RLR07C4303%&	430,000	1/4	G	S	P, R	DAL, IRC
RLR07C4323%&	432,000	1/4	F	S	P, R	DAL, IRC
RLR07C4423%&	442,000	1/4	F	S	P, R	DAL, IRC
RLR07C4533%&	453,000	1/4	F	S	P, R	DAL, IRC
RLR07C4643%&	464,000	1/4	F	S	P, R	DAL, IRC
RLR07C4703%&	470,000	1/4	G	S	P, R	DAL, IRC
RLR07C4753%&	475,000	1/4	F	S	P, R	DAL, IRC
RLR07C4873%&	487,000	1/4	F	S	P, R	DAL, IRC
RLR07C4993%&	499,000	1/4	F	S	P, R	DAL, IRC
RLR07C5103%&	510,000	1/4	G	S	P, R	DAL, IRC
RLR07C5113%&	511,000	1/4	F	S	P, R	DAL, IRC
	Resistance	Power	Resistance	Level 1	Level 2	
Part Number	Value (Ohms)	Rating (W)	Tolerance (%)	(FRL)(&)	(FRL)(&)	Manufacturer

RLR07C5233%&	523,000	1/4	F	S	P, R	DAL, IRC
RLR07C5363%&	536,000	1/4	F	S	P, R	DAL, IRC
RLR07C5493%&	549,000	1/4	F	S	P, R	DAL, IRC
RLR07C5603%&	560,000	1/4	G	S	P, R	DAL, IRC
RLR07C5623%&	562,000	1/4	F	S	P, R	DAL, IRC
RLR07C5763%&	576,000	1/4	F	S	P, R	DAL, IRC
RLR07C5903%&	590,000	1/4	F	S	P, R	DAL, IRC
RLR07C6043%&	604,000	1/4	F	S	P, R	DAL, IRC
RLR07C6193%&	619,000	1/4	F	S	P, R	DAL, IRC
RLR07C6203%&	620,000	1/4	G	S	P, R	DAL, IRC
RLR07C6343%&	634,000	1/4	F	S	P, R	DAL, IRC
RLR07C6493%&	649,000	1/4	F	S	P, R	DAL, IRC
RLR07C6653%&	665,000	1/4	F	S	P, R	DAL, IRC
RLR07C6803%&	680,000	1/4	G	S	P, R	DAL, IRC
	Resistance	Power	Resistance	Level 1	Level 2	
Part Number	Value (Ohms)	Rating (W)	Tolerance (%)	(FRL)(&)	(FRL)(&)	Manufacturer
RLR07C6813%&	681,000	1/4	F	S	P, R	DAL, IRC
RLR07C6983%&	698,000	1/4	F	S	P, R	DAL, IRC
RLR07C7153%&	715,000	1/4	F	S	P, R	DAL, IRC
RLR07C7323%&	732,000	1/4	F	S	P, R	DAL, IRC
RLR07C7503%&	750,000	1/4	F	S	P, R	DAL, IRC
RLR07C7683%&	768,000	1/4	F	S	P, R	DAL, IRC
RLR07C7873%&	787,000	1/4	F	S	P, R	DAL, IRC
RLR07C8063%&	806,000	1/4	F	S	P, R	DAL, IRC
RLR07C8203%&	820,000	1/4	G	S	P, R	DAL, IRC
RLR07C8253%&	825,000	1/4	F	S	P, R	DAL, IRC
RLR07C8453%&	845,000	1/4	F	S	P, R	DAL, IRC
RLR07C8673%&	867,000	1/4	F	S	P, R	DAL, IRC
RLR07C8873%&	887,000	1/4	F	S	P, R	DAL, IRC
RLR07C9093%&	909,000	1/4	F	S	P, R	DAL, IRC
	Resistance	Power	Resistance	Level 1	Level 2	
Part Number	Value (Ohms)	Rating (W)	Tolerance (%)	(FRL)(&)	(FRL)(&)	Manufacturer
RLR07C9103%&	910,000	1/4	G	S	P, R	DAL, IRC
RLR07C9313%&	931,000	1/4	F	S	P, R	DAL, IRC
RLR07C9533%&	953,000	1/4	F	S	P, R	DAL, IRC
RLR07C9763%&	976,000	1/4	F	S	P, R	DAL, IRC

RLR07 Film Resistors: 1,000,000 Ohms through 9,760,000 Ohms

	Resistance	Power	Resistance	Level 1	Level 2	
Part Number	Value (Ohms)	Rating (W)	Tolerance (%)	(FRL)(&)	(FRL)(&)	Manufacturer
RLR07C1004%&	1,000,000	1/4	F, G	S	P, R	DAL, IRC
RLR07C1024%&	1,020,000	1/4	F	S	P, R	DAL, IRC
RLR07C1054%&	1,050,000	1/4	F	S	P, R	DAL, IRC
RLR07C1074%&	1,070,000	1/4	F	S	P, R	DAL, IRC

RLR07C1104%&	1,100,000	1/4	F, G	S	P, R	DAL, IRC
RLR07C1134%&	1,130,000	1/4	F	S	P, R	DAL, IRC
RLR07C1154%&	1,150,000	1/4	F	S	P, R	DAL, IRC
RLR07C1184%&	1,180,000	1/4	F	S	P, R	DAL, IRC
RLR07C1204%&	1,200,000	1/4	G	S	P, R	DAL, IRC
RLR07C1214%&	1,210,000	1/4	F	S	P, R	DAL, IRC
RLR07C1244%&	1,240,000	1/4	F	S	P, R	DAL, IRC
RLR07C1274%&	1,270,000	1/4	F	S	P, R	DAL, IRC
RLR07C1304%&	1,300,000	1/4	F, G	S	P, R	DAL, IRC
RLR07C1334%&	1,330,000	1/4	F	S	P, R	DAL, IRC
	Resistance	Power	Resistance	Level 1	Level 2	
Part Number	Value (Ohms)	Rating (W)	Tolerance (%)	(FRL)(&)	(FRL)(&)	Manufacturer
RLR07C1374%&	1,370,000	1/4	F	S	P, R	DAL, IRC
RLR07C1404%&	1,400,000	1/4	F	S	P, R	DAL, IRC
RLR07C1434%&	1,430,000	1/4	F	S	P, R	DAL, IRC
RLR07C1474%&	1,470,000	1/4	F	S	P, R	DAL, IRC
RLR07C1504%&	1,500,000	1/4	F, G	S	P, R	DAL, IRC
RLR07C1544%&	1,540,000	1/4	F	S	P, R	DAL, IRC
RLR07C1584%&	1,580,000	1/4	F	S	P, R	DAL, IRC
RLR07C1604%&	1,600,000	1/4	G	S	P, R	DAL, IRC
RLR07C1624%&	1,620,000	1/4	F	S	P, R	DAL, IRC
RLR07C1654%&	1,650,000	1/4	F	S	P, R	DAL, IRC
RLR07C1694%&	1,690,000	1/4	F	S	P, R	DAL, IRC
RLR07C1744%&	1,740,000	1/4	F	S	P, R	DAL, IRC
RLR07C1784%&	1,780,000	1/4	F	S	P, R	DAL, IRC
RLR07C1804%&	1,800,000	1/4	G	S	P, R	DAL, IRC
	Resistance	Power	Resistance	Level 1	Level 2	
Part Number	Value (Ohms)	Rating (W)	Tolerance (%)	(FRL)(&)	(FRL)(&)	Manufacturer
RLR07C1824%&	1,820,000	1/4	F	S	P, R	DAL, IRC
RLR07C1874%&	1,870,000	1/4	F	S	P, R	DAL, IRC
RLR07C1914%&	1,910,000	1/4	F	S	P, R	DAL, IRC
RLR07C1964%&	1,960,000	1/4	F	S	P, R	DAL, IRC
RLR07C2004%&	2,000,000	1/4	F, G	S	P, R	DAL, IRC
RLR07C2054%&	2,050,000	1/4	F	S	P, R	DAL, IRC
RLR07C2104%&	2,100,000	1/4	F	S	P, R	DAL, IRC
RLR07C2154%&	2,150,000	1/4	F	S	P, R	DAL, IRC
RLR07C2204%&	2,200,000	1/4	G	S	P, R	DAL, IRC
RLR07C2214%&	2,210,000	1/4	F	S	P, R	DAL, IRC
RLR07C2264%&	2,260,000	1/4	F	S	P, R	DAL, IRC
RLR07C2324%&	2,320,000	1/4	F	S	P, R	DAL, IRC
RLR07C2374%&	2,370,000	1/4	F	S	P, R	DAL, IRC
RLR07C2404%&	2,400,000	1/4	G	S	P, R	DAL, IRC
	Resistance	Power	Resistance	Level 1	Level 2	
Part Number	Value (Ohms)	Rating (W)	Tolerance (%)	(FRL)(&)	(FRL)(&)	Manufacturer
RLR07C2434%&	2,430,000	1/4	F	S	P, R	DAL, IRC
RLR07C2494%&	2,490,000	1/4	F	S	P, R	DAL, IRC
RLR07C2554%&	2,550,000	1/4	F	S	P, R	DAL, IRC

RLR07C2614%&	2,610,000	1/4	F	S	P, R	DAL, IRC
RLR07C2674%&	2,670,000	1/4	F	S	P, R	DAL, IRC
RLR07C2704%&	2,700,000	1/4	G	S	P, R	DAL, IRC
RLR07C2744%&	2,740,000	1/4	F	S	P, R	DAL, IRC
RLR07C2804%&	2,800,000	1/4	F	S	P, R	DAL, IRC
RLR07C2874%&	2,870,000	1/4	F	S	P, R	DAL, IRC
RLR07C2944%&	2,940,000	1/4	F	S	P, R	DAL, IRC
RLR07C3004%&	3,000,000	1/4	G	S	P, R	DAL, IRC
RLR07C3014%&	3,010,000	1/4	F	S	P, R	DAL, IRC
	Resistance	Power	Resistance	Level 1	Level 2	
Part Number	Value (Ohms)	Rating (W)	Tolerance (%)	(FRL)(&)	(FRL)(&)	Manufacturer
RLR07C3094%&	3,090,000	1/4	F	-	P, R	DAL
RLR07C3164%&	3,160,000	1/4	F	-	P, R	DAL
RLR07C3244%&	3,240,000	1/4	F	-	P, R	DAL
RLR07C3304%&	3,300,000	1/4	G	-	P, R	DAL
RLR07C3324%&	3,320,000	1/4	F	-	P, R	DAL
RLR07C3404%&	3,400,000	1/4	F	-	P, R	DAL
RLR07C3484%&	3,480,000	1/4	F	-	P, R	DAL
RLR07C3574%&	3,570,000	1/4	F	-	P, R	DAL
RLR07C3604%&	3,600,000	1/4	G	-	P, R	DAL
RLR07C3654%&	3,650,000	1/4	F	-	P, R	DAL
RLR07C3744%&	3,740,000	1/4	F	-	P, R	DAL
RLR07C3834%&	3,830,000	1/4	F	-	P, R	DAL
RLR07C3904%&	3,900,000	1/4	G	-	P, R	DAL
RLR07C3924%&	3,920,000	1/4	F	-	P, R	DAL
	Resistance	Power	Resistance	Level 1	Level 2	
Part Number	Value (Ohms)	Rating (W)	Tolerance (%)	(FRL)(&)	(FRL)(&)	Manufacturer
RLR07C4024%&	4,020,000	1/4	F	-	P, R	DAL
RLR07C4124%&	4,120,000	1/4	F	-	P, R	DAL
RLR07C4224%&	4,220,000	1/4	F	-	P, R	DAL
RLR07C4304%&	4,300,000	1/4	G	-	P, R	DAL
RLR07C4324%&	4,320,000	1/4	F	-	P, R	DAL
RLR07C4424%&	4,420,000	1/4	F	-	P, R	DAL
RLR07C4534%&	4,530,000	1/4	F	-	P, R	DAL
RLR07C4644%&	4,640,000	1/4	F	-	P, R	DAL
RLR07C4704%&	4,700,000	1/4	G	-	P, R	DAL
RLR07C4754%&	4,750,000	1/4	F	-	P, R	DAL
RLR07C4874%&	4,870,000	1/4	F	-	P, R	DAL
RLR07C4994%&	4,990,000	1/4	F	-	P, R	DAL
RLR07C5104%&	5,100,000	1/4	G	-	P, R	DAL
RLR07C5114%&	5,110,000	1/4	F	-	P, R	DAL
	Resistance	Power	Resistance	Level 1	Level 2	
Part Number	Value (Ohms)	Rating (W)	Tolerance (%)	(FRL)(&)	(FRL)(&)	Manufacturer
RLR07C5234%&	5,230,000	1/4	F	-	P, R	DAL
RLR07C5364%&	5,360,000	1/4	F	-	P, R	DAL
RLR07C5494%&	5,490,000	1/4	F	-	P, R	DAL
RLR07C5604%&	5,600,000	1/4	G	-	P, R	DAL

RLR07C5624%&	5,620,000	1/4	F	-	P, R	DAL
RLR07C5764%&	5,760,000	1/4	F	-	P, R	DAL
RLR07C5904%&	5,900,000	1/4	F	-	P, R	DAL
RLR07C6044%&	6,040,000	1/4	F	-	P, R	DAL
RLR07C6194%&	6,190,000	1/4	F	-	P, R	DAL
RLR07C6204%&	6,200,000	1/4	G	-	P, R	DAL
RLR07C6344%&	6,340,000	1/4	F	-	P, R	DAL
RLR07C6494%&	6,490,000	1/4	F	-	P, R	DAL
RLR07C6654%&	6,650,000	1/4	F	-	P, R	DAL
RLR07C6804%&	6,800,000	1/4	G	-	P, R	DAL
	Resistance	Power	Resistance	Level 1	Level 2	
Part Number	Value (Ohms)	Rating (W)	Tolerance (%)	(FRL)(&)	(FRL)(&)	Manufacturer
RLR07C6814%&	6,810,000	1/4	F	-	P, R	DAL
RLR07C6984%&	6,980,000	1/4	F	-	P, R	DAL
RLR07C7154%&	7,150,000	1/4	F	-	P, R	DAL
RLR07C7324%&	7,320,000	1/4	F	-	P, R	DAL
RLR07C7504%&	7,500,000	1/4	F	-	P, R	DAL
RLR07C7684%&	7,680,000	1/4	F	-	P, R	DAL
RLR07C7874%&	7,870,000	1/4	F	-	P, R	DAL
RLR07C8064%&	8,060,000	1/4	F	-	P, R	DAL
RLR07C8204%&	8,200,000	1/4	G	-	P, R	DAL
RLR07C8254%&	8,250,000	1/4	F	-	P, R	DAL
RLR07C8454%&	8,450,000	1/4	F	-	P, R	DAL
RLR07C8674%&	8,670,000	1/4	F	-	P, R	DAL
RLR07C8874%&	8,870,000	1/4	F	-	P, R	DAL
RLR07C9094%&	9,090,000	1/4	F	-	P, R	DAL
	Resistance	Power	Resistance	Level 1	Level 2	
Part Number	Value (Ohms)	Rating (W)	Tolerance (%)	(FRL)(&)	(FRL)(&)	Manufacturer
RLR07C9104%&	9,100,000	1/4	G	-	P, R	DAL
RLR07C9314%&	9,310,000	1/4	F	-	P, R	DAL
RLR07C9534%&	9,530,000	1/4	F	-	P, R	DAL
RLR07C9764%&	9,760,000	1/4	F	-	P, R	DAL

RLR07 Film Resistors: 10,000,000 Ohms through 22,000,000 Ohms

	Resistance	Power	Resistance	Level 1	Level 2	
Part Number	Value (Ohms)	Rating (W)	Tolerance (%)	(FRL)(&)	(FRL)(&)	Manufacturer
RLR07C1005%&	10,000,000	1/4	F, G	-	P, R	DAL
RLR07C1105%&	11,000,000	1/4	G	-	P, R	DAL
RLR07C1205%&	12,000,000	1/4	G	-	P, R	DAL
RLR07C1305%&	13,000,000	1/4	G	-	P, R	DAL
RLR07C1505%&	15,000,000	1/4	G	-	P, R	DAL
RLR07C1605%&	16,000,000	1/4	G	-	P, R	DAL
RLR07C1805%&	18,000,000	1/4	G	-	P, R	DAL
RLR07C2005%&	20,000,000	1/4	G	-	P, R	DAL

RLR07C2205%&	22,000,000	1/4	G	-	P, R	DAL

RLR20 Film Resistors

	Resistance	Power	Resistance	Level 1	Level 2	
Part Number	Value (Ohms)	Rating (W)	Tolerance (%)	(FRL)(&)	(FRL)(&)	Manufacturer
RLR20C4R30%&	4.30	1/2	G	S	P, R	DAL, IRC
RLR20C4R32%&	4.32	1/2	F	S	P, R	DAL, IRC
RLR20C4R42%&	4.42	1/2	F	S	P, R	DAL, IRC
RLR20C4R53%&	4.53	1/2	F	S	P, R	DAL, IRC
RLR20C4R64%&	4.64	1/2	F	S	P, R	DAL, IRC
RLR20C4R70%&	4.70	1/2	G	S	P, R	DAL, IRC
RLR20C4R75%&	4.75	1/2	F	S	P, R	DAL, IRC
RLR20C4R87%&	4.87	1/2	F	S	P, R	DAL, IRC
RLR20C4R99%&	4.99	1/2	F	S	P, R	DAL, IRC
RLR20C5R10%&	5.10	1/2	G	S	P, R	DAL, IRC
RLR20C5R11%&	5.11	1/2	F	S	P, R	DAL, IRC
RLR20C5R23%&	5.23	1/2	F	S	P, R	DAL, IRC
RLR20C5R36%&	5.36	1/2	F	S	P, R	DAL, IRC
RLR20C5R49%&	5.49	1/2	F	S	P, R	DAL, IRC
RLR20C5R60%&	5.60	1/2	G	S	P, R	DAL, IRC
RLR20C5R62%&	5.62	1/2	F	S	P, R	DAL, IRC
RLR20C5R76%&	5.76	1/2	F	S	P, R	DAL, IRC
RLR20C5R90%&	5.90	1/2	F	S	P, R	DAL, IRC
RLR20C6R04%&	6.04	1/2	F	S	P, R	DAL, IRC
RLR20C6R19%&	6.19	1/2	F	S	P, R	DAL, IRC
RLR20C6R20%&	6.20	1/2	G	S	P, R	DAL, IRC
RLR20C6R34%&	6.34	1/2	F	S	P, R	DAL, IRC
RLR20C6R49%&	6.49	1/2	F	S	P, R	DAL, IRC
RLR20C6R65%&	6.65	1/2	F	S	P, R	DAL, IRC
RLR20C6R80%&	6.80	1/2	G	S	P, R	DAL, IRC
RLR20C6R81%&	6.81	1/2	F	S	P, R	DAL, IRC
RLR20C6R98%&	6.98	1/2	F	S	P, R	DAL, IRC
RLR20C7R15%&	7.15	1/2	F	S	P, R	DAL, IRC
RLR20C7R32%&	7.32	1/2	F	S	P, R	DAL, IRC
RLR20C7R50%&	7.50	1/2	F	S	P, R	DAL, IRC
RLR20C7R68%&	7.68	1/2	F	S	P, R	DAL, IRC
RLR20C7R87%&	7.87	1/2	F	S	P, R	DAL, IRC
RLR20C8R06%&	8.06	1/2	F	S	P, R	DAL, IRC
RLR20C8R20%&	8.20	1/2	G	S	P, R	DAL, IRC
RLR20C8R25%	8.25	1/2	F	S	P, R	DAL, IRC
RLR20C8R45%&	8.45	1/2	F	S	P, R	DAL, IRC
RLR20C8R67%&	8.67	1/2	F	S	P, R	DAL, IRC
RLR20C8R87%&	8.87	1/2	F	S	P, R	DAL, IRC
RLR20C9R09%&	9.09	1/2	F	S	P, R	DAL, IRC

RLR20C9R10%&	9.10	1/2	G	S	P, R	DAL, IRC
RLR20C9R31%&	9.31	1/2	F	S	P, R	DAL, IRC
RLR20C9R53%&	9.53	1/2	F	S	P, R	DAL, IRC
RLR20C9R76%&	9.76	1/2	F	S	P, R	DAL, IRC
RLR20C10R0%&	10.0	1/2	F, G	S	P, R	DAL, IRC
RLR20C10R2%&	10.2	1/2	F	S	P, R	DAL, IRC
RLR20C10R5%&	10.5	1/2	F	S	P, R	DAL, IRC
RLR20C10R7%&	10.7	1/2	F	S	P, R	DAL, IRC
RLR20C11R0%&	11.0	1/2	F, G	S	P, R	DAL, IRC
RLR20C11R3%&	11.3	1/2	F	S	P, R	DAL, IRC
RLR20C11R5%&	11.5	1/2	F	S	P, R	DAL, IRC
RLR20C11R8%&	11.8	1/2	F	S	P, R	DAL, IRC
RLR20C12R0%&	12.0	1/2	G	S	P, R	DAL, IRC
RLR20C12R1%&	12.1	1/2	F	S	P, R	DAL, IRC
RLR20C12R4%&	12.4	1/2	F	S	P, R	DAL, IRC
RLR20C12R7%&	12.7	1/2	F	S	P, R	DAL, IRC
RLR20C13R0%&	13.0	1/2	F, G	S	P, R	DAL, IRC
RLR20C13R3%&	13.3	1/2	F	S	P, R	DAL, IRC
RLR20C13R7%&	13.7	1/2	F	S	P, R	DAL, IRC
RLR20C14R0%&	14.0	1/2	F	S	P, R	DAL, IRC
RLR20C14R3%&	14.3	1/2	F	S	P, R	DAL, IRC
RLR20C14R7%&	14.7	1/2	F	S	P, R	DAL, IRC
RLR20C15R0%&	15.0	1/2	F, G	S	P, R	DAL, IRC
RLR20C15R4%&	15.4	1/2	F	S	P, R	DAL, IRC
RLR20C15R8%&	15.8	1/2	F	S	P, R	DAL, IRC
RLR20C16R0%&	16.0	1/2	G	S	P, R	DAL, IRC
RLR20C16R2%&	16.2	1/2	F	S	P, R	DAL, IRC
RLR20C16R5%&	16.5	1/2	F	S	P, R	DAL, IRC
RLR20C16R9%&	16.9	1/2	F	S	P, R	DAL, IRC
RLR20C17R4%&	17.4	1/2	F	S	P, R	DAL, IRC
RLR20C17R8%&	17.8	1/2	F	S	P, R	DAL, IRC
RLR20C18R0%&	18.0	1/2	G	S	P, R	DAL, IRC
RLR20C18R2%&	18.2	1/2	F	S	P, R	DAL, IRC
RLR20C18R7%&	18.7	1/2	F	S	P, R	DAL, IRC
RLR20C19R1%&	19.1	1/2	F	S	P, R	DAL, IRC
RLR20C19R6%&	19.6	1/2	F	S	P, R	DAL, IRC
RLR20C20R0%&	20.0	1/2	F, G	S	P, R	DAL, IRC
RLR20C20R5%&	20.5	1/2	F	S	P, R	DAL, IRC
RLR20C21R0%&	21.0	1/2	F	S	P, R	DAL, IRC
RLR20C21R5%&	21.5	1/2	F	S	P, R	DAL, IRC
RLR20C22R0%&	22.0	1/2	G	S	P, R	DAL, IRC
RLR20C22R1%&	22.1	1/2	F	S	P, R	DAL, IRC
RLR20C22R6%&	22.6	1/2	F	S	P, R	DAL, IRC
RLR20C23R2%&	23.2	1/2	F	S	P, R	DAL, IRC
RLR20C23R7%&	23.7	1/2	F	S	P, R	DAL, IRC
RLR20C24R0%&	24.0	1/2	G	S	P, R	DAL, IRC
RLR20C24R3%&	24.3	1/2	F	S	P, R	DAL, IRC

RLR20C24R9%&	24.9	1/2	F	S	P, R	DAL, IRC
RLR20C25R5%&	25.5	1/2	F	S	P, R	DAL, IRC
RLR20C26R1%&	26.1	1/2	F	S	P, R	DAL, IRC
RLR20C26R7%&	26.7	1/2	F	S	P, R	DAL, IRC
RLR20C27R0%&	27.0	1/2	G	S	P, R	DAL, IRC
RLR20C27R4%&	27.4	1/2	F	S	P, R	DAL, IRC
RLR20C28R0%&	28.0	1/2	F	S	P, R	DAL, IRC
RLR20C28R7%&	28.7	1/2	F	S	P, R	DAL, IRC
RLR20C29R4%&	29.4	1/2	F	S	P, R	DAL, IRC
RLR20C30R0%&	30.0	1/2	G	S	P, R	DAL, IRC
RLR20C30R1%&	30.1	1/2	F	S	P, R	DAL, IRC
RLR20C30R9%&	30.9	1/2	F	S	P, R	DAL, IRC
RLR20C31R6%&	31.6	1/2	F	S	P, R	DAL, IRC
RLR20C32R4%&	32.4	1/2	F	S	P, R	DAL, IRC
RLR20C33R0%&	33.0	1/2	G	S	P, R	DAL, IRC
RLR20C33R2%&	33.2	1/2	F	S	P, R	DAL, IRC
RLR20C34R0%&	34.0	1/2	F	S	P, R	DAL, IRC
RLR20C34R8%&	34.8	1/2	F	S	P, R	DAL, IRC
RLR20C35R7%&	35.7	1/2	F	S	P, R	DAL, IRC
RLR20C36R0%&	36.0	1/2	G	S	P, R	DAL, IRC
RLR20C36R5%&	36.5	1/2	F	S	P, R	DAL, IRC
RLR20C37R4%&	37.4	1/2	F	S	P, R	DAL, IRC
RLR20C38R3%&	38.3	1/2	F	S	P, R	DAL, IRC
RLR20C39R0%&	39.0	1/2	G	S	P, R	DAL, IRC
RLR20C39R2%&	39.2	1/2	F	S	P, R	DAL, IRC
RLR20C40R2%&	40.2	1/2	F	S	P, R	DAL, IRC
RLR20C41R2%&	41.2	1/2	F	S	P, R	DAL, IRC
RLR20C42R2%&	42.2	1/2	F	S	P, R	DAL, IRC
RLR20C43R0%&	43.0	1/2	G	S	P, R	DAL, IRC
RLR20C43R2%&	43.2	1/2	F	S	P, R	DAL, IRC
RLR20C44R2%&	44.2	1/2	F	S	P, R	DAL, IRC
RLR20C45R3%&	45.3	1/2	F	S	P, R	DAL, IRC
RLR20C46R4%&	46.4	1/2	F	S	P, R	DAL, IRC
RLR20C47R0%&	47.0	1/2	G	S	P, R	DAL, IRC
RLR20C47R5%&	47.5	1/2	F	S	P, R	DAL, IRC
RLR20C48R7%&	48.7	1/2	F	S	P, R	DAL, IRC
RLR20C49R9%&	49.9	1/2	F	S	P, R	DAL, IRC
RLR20C51R0%&	51.0	1/2	G	S	P, R	DAL, IRC
RLR20C51R1%&	51.1	1/2	F	S	P, R	DAL, IRC
RLR20C52R3%&	52.3	1/2	F	S	P, R	DAL, IRC
RLR20C53R6%&	53.6	1/2	F	S	P, R	DAL, IRC
RLR20C54R9%&	54.9	1/2	F	S	P, R	DAL, IRC
RLR20C56R0%&	56.0	1/2	G	S	P, R	DAL, IRC
RLR20C56R2%&	56.2	1/2	F	S	P, R	DAL, IRC
RLR20C57R6%&	57.6	1/2	F	S	P, R	DAL, IRC
RLR20C59R0%&	59.0	1/2	F	S	P, R	DAL, IRC
RLR20C60R4%&	60.4	1/2	F	S	P, R	DAL, IRC

RLR20C61R9%&	61.9	1/2	F	S	P, R	DAL, IRC
RLR20C62R0%&	62.0	1/2	G	S	P, R	DAL, IRC
RLR20C63R4%&	63.4	1/2	F	S	P, R	DAL, IRC
RLR20C64R9%&	64.9	1/2	F	S	P, R	DAL, IRC
RLR20C66R5%&	66.5	1/2	F	S	P, R	DAL, IRC
RLR20C68R0%&	68.0	1/2	G	S	P, R	DAL, IRC
RLR20C68R1%&	68.1	1/2	F	S	P, R	DAL, IRC
RLR20C69R8%&	69.8	1/2	F	S	P, R	DAL, IRC
RLR20C71R5%&	71.5	1/2	F	S	P, R	DAL, IRC
RLR20C73R2%&	73.2	1/2	F	S	P, R	DAL, IRC
RLR20C75R0%&	75.0	1/2	F	S	P, R	DAL, IRC
RLR20C76R8%&	76.8	1/2	F	S	P, R	DAL, IRC
RLR20C78R7%&	78.7	1/2	F	S	P, R	DAL, IRC
RLR20C80R6%&	80.6	1/2	F	S	P, R	DAL, IRC
RLR20C82R0%&	82.0	1/2	G	S	P, R	DAL, IRC
RLR20C82R5%&	82.5	1/2	F	S	P, R	DAL, IRC
RLR20C84R5%&	84.5	1/2	F	S	P, R	DAL, IRC
RLR20C86R7%&	86.7	1/2	F	S	P, R	DAL, IRC
RLR20C88R7%&	88.7	1/2	F	S	P, R	DAL, IRC
RLR20C90R9%&	90.9	1/2	F	S	P, R	DAL, IRC
RLR20C91R0%&	91.0	1/2	G	S	P, R	DAL, IRC
RLR20C93R1%&	93.1	1/2	F	S	P, R	DAL, IRC
RLR20C95R3%&	95.3	1/2	F	S	P, R	DAL, IRC
RLR20C97R6%&	97.6	1/2	F	S	P, R	DAL, IRC
RLR20C1000%&	100	1/2	F, G	S	P, R	DAL, IRC
RLR20C1020%&	102	1/2	F	S	P, R	DAL, IRC
RLR20C1050%&	105	1/2	F	S	P, R	DAL, IRC
RLR20C1070%&	107	1/2	F	S	P, R	DAL, IRC
RLR20C1100%&	110	1/2	F, G	S	P, R	DAL, IRC
RLR20C1130%&	113	1/2	F	S	P, R	DAL, IRC
RLR20C1150%&	115	1/2	F	S	P, R	DAL, IRC
RLR20C1180%&	118	1/2	F	S	P, R	DAL, IRC
RLR20C1200%&	120	1/2	G	S	P, R	DAL, IRC
RLR20C1210%&	121	1/2	F	S	P, R	DAL, IRC
RLR20C1240%&	124	1/2	F	S	P, R	DAL, IRC
RLR20C1270%&	127	1/2	F	S	P, R	DAL, IRC
RLR20C1300%&	130	1/2	F, G	S	P, R	DAL, IRC
RLR20C1330%&	133	1/2	F	S	P, R	DAL, IRC
RLR20C1370%&	137	1/2	F	S	P, R	DAL, IRC
RLR20C1400%&	140	1/2	F	S	P, R	DAL, IRC
RLR20C1430%&	143	1/2	F	S	P, R	DAL, IRC
RLR20C1470%&	147	1/2	F	S	P, R	DAL, IRC
RLR20C1500%&	150	1/2	F, G	S	P, R	DAL, IRC
RLR20C1540%&	154	1/2	F	S	P, R	DAL, IRC
RLR20C1580%&	158	1/2	F	S	P, R	DAL, IRC
RLR20C1600%&	160	1/2	G	S	P, R	DAL, IRC
RLR20C1620%&	162	1/2	F	S	P, R	DAL, IRC

RLR20C1650%&	165	1/2	F	S	P, R	DAL, IRC
RLR20C1690%&	169	1/2	F	S	P, R	DAL, IRC
RLR20C1740%&	174	1/2	F	S	P, R	DAL, IRC
RLR20C1780%&	178	1/2	F	S	P, R	DAL, IRC
RLR20C1800%&	180	1/2	G	S	P, R	DAL, IRC
RLR20C1820%&	182	1/2	F	S	P, R	DAL, IRC
RLR20C1870%&	187	1/2	F	S	P, R	DAL, IRC
RLR20C1910%&	191	1/2	F	S	P, R	DAL, IRC
RLR20C1960%&	196	1/2	F	S	P, R	DAL, IRC
RLR20C2000%&	200	1/2	F, G	S	P, R	DAL, IRC
RLR20C2050%&	205	1/2	F	S	P, R	DAL, IRC
RLR20C2100%&	210	1/2	F	S	P, R	DAL, IRC
RLR20C2150%&	215	1/2	F	S	P, R	DAL, IRC
RLR20C2200%&	220	1/2	G	S	P, R	DAL, IRC
RLR20C2210%&	221	1/2	F	S	P, R	DAL, IRC
RLR20C2260%&	226	1/2	F	S	P, R	DAL, IRC
RLR20C2320%&	232	1/2	F	S	P, R	DAL, IRC
RLR20C2370%&	237	1/2	F	S	P, R	DAL, IRC
RLR20C2400%&	240	1/2	G	S	P, R	DAL, IRC
RLR20C2430%&	243	1/2	F	S	P, R	DAL, IRC
RLR20C2490%&	249	1/2	F	S	P, R	DAL, IRC
RLR20C2550%&	255	1/2	F	S	P, R	DAL, IRC
RLR20C2610%&	261	1/2	F	S	P, R	DAL, IRC
RLR20C2670%&	267	1/2	F	S	P, R	DAL, IRC
RLR20C2700%&	270	1/2	G	S	P, R	DAL, IRC
RLR20C2740%&	274	1/2	F	S	P, R	DAL, IRC
RLR20C2800%&	280	1/2	F	S	P, R	DAL, IRC
RLR20C2870%&	287	1/2	F	S	P, R	DAL, IRC
RLR20C2940%&	294	1/2	F	S	P, R	DAL, IRC
RLR20C3000%&	300	1/2	G	S	P, R	DAL, IRC
RLR20C3010%&	301	1/2	F	S	P, R	DAL, IRC
RLR20C3090%&	309	1/2	F	S	P, R	DAL, IRC
RLR20C3160%&	316	1/2	F	S	P, R	DAL, IRC
RLR20C3240%&	324	1/2	F	S	P, R	DAL, IRC
RLR20C3300%&	330	1/2	G	S	P, R	DAL, IRC
RLR20C3320%&	332	1/2	F	S	P, R	DAL, IRC
RLR20C3400%&	340	1/2	F	S	P, R	DAL, IRC
RLR20C3480%&	348	1/2	F	S	P, R	DAL, IRC
RLR20C3570%&	357	1/2	F	S	P, R	DAL, IRC
RLR20C3600%&	360	1/2	G	S	P, R	DAL, IRC
RLR20C3650%&	365	1/2	F	S	P, R	DAL, IRC
RLR20C3740%&	374	1/2	F	S	P, R	DAL, IRC
RLR20C3830%&	383	1/2	F	S	P, R	DAL, IRC
RLR20C3900%&	390	1/2	G	S	P, R	DAL, IRC
RLR20C3920%&	392	1/2	F	S	P, R	DAL, IRC
RLR20C4020%&	402	1/2	F	S	P, R	DAL, IRC
RLR20C4120%&	412	1/2	F	S	P, R	DAL, IRC

RLR20C4220%&	422	1/2	F	S	P, R	DAL, IRC
RLR20C4300%&	430	1/2	G	S	P, R	DAL, IRC
RLR20C4320%&	432	1/2	F	S	P, R	DAL, IRC
RLR20C4420%&	442	1/2	F	S	P, R	DAL, IRC
RLR20C4530%&	453	1/2	F	S	P, R	DAL, IRC
RLR20C4640%&	464	1/2	F	S	P, R	DAL, IRC
RLR20C4700%&	470	1/2	G	S	P, R	DAL, IRC
RLR20C4750%&	475	1/2	F	S	P, R	DAL, IRC
RLR20C4870%&	487	1/2	F	S	P, R	DAL, IRC
RLR20C4990%&	499	1/2	F	S	P, R	DAL, IRC
RLR20C5100%&	510	1/2	G	S	P, R	DAL, IRC
RLR20C5110%&	511	1/2	F	S	P, R	DAL, IRC
RLR20C5230%&	523	1/2	F	S	P, R	DAL, IRC
RLR20C5360%&	536	1/2	F	S	P, R	DAL, IRC
RLR20C5490%&	549	1/2	F	S	P, R	DAL, IRC
RLR20C5600%&	560	1/2	G	S	P, R	DAL, IRC
RLR20C5620%&	562	1/2	F	S	P, R	DAL, IRC
RLR20C5760%&	576	1/2	F	S	P, R	DAL, IRC
RLR20C5900%&	590	1/2	F	S	P, R	DAL, IRC
RLR20C6040%&	604	1/2	F	S	P, R	DAL, IRC
RLR20C6190%&	619	1/2	F	S	P, R	DAL, IRC
RLR20C6200%&	620	1/2	G	S	P, R	DAL, IRC
RLR20C6340%&	634	1/2	F	S	P, R	DAL, IRC
RLR20C6490%&	649	1/2	F	S	P, R	DAL, IRC
RLR20C6650%&	665	1/2	F	S	P, R	DAL, IRC
RLR20C6800%&	680	1/2	G	S	P, R	DAL, IRC
RLR20C6810%&	681	1/2	F	S	P, R	DAL, IRC
RLR20C6980%&	698	1/2	F	S	P, R	DAL, IRC
RLR20C7150%&	715	1/2	F	S	P, R	DAL, IRC
RLR20C7320%&	732	1/2	F	S	P, R	DAL, IRC
RLR20C7500%&	750	1/2	F	S	P, R	DAL, IRC
RLR20C7680%&	768	1/2	F	S	P, R	DAL, IRC
RLR20C7870%&	787	1/2	F	S	P, R	DAL, IRC
RLR20C8060%&	806	1/2	F	S	P, R	DAL, IRC
RLR20C8200%&	820	1/2	G	S	P, R	DAL, IRC
RLR20C8250%&	825	1/2	F	S	P, R	DAL, IRC
RLR20C8450%&	845	1/2	F	S	P, R	DAL, IRC
RLR20C8670%&	867	1/2	F	S	P, R	DAL, IRC
RLR20C8870%&	887	1/2	F	S	P, R	DAL, IRC
RLR20C9090%&	909	1/2	F	S	P, R	DAL, IRC
RLR20C9100%&	910	1/2	G	S	P, R	DAL, IRC
RLR20C9310%&	931	1/2	F	S	P, R	DAL, IRC
RLR20C9530%&	953	1/2	F	S	P, R	DAL, IRC
RLR20C9760%&	976	1/2	F	S	P, R	DAL, IRC
RLR20C1001%&	1,000	1/2	F, G	S	P, R	DAL, IRC
RLR20C1021%&	1,020	1/2	F	S	P, R	DAL, IRC
RLR20C1051%&	1,050	1/2	F	S	P, R	DAL, IRC

RLR20C1071%&	1,070	1/2	F	S	P, R	DAL, IRC
RLR20C1101%&	1,100	1/2	F, G	S	P, R	DAL, IRC
RLR20C1131%&	1,130	1/2	F	S	P, R	DAL, IRC
RLR20C1151%&	1,150	1/2	F	S	P, R	DAL, IRC
RLR20C1181%&	1,180	1/2	F	S	P, R	DAL, IRC
RLR20C1201%&	1,200	1/2	G	S	P, R	DAL, IRC
RLR20C1211%&	1,210	1/2	F	S	P, R	DAL, IRC
RLR20C1241%&	1,240	1/2	F	S	P, R	DAL, IRC
RLR20C1271%&	1,270	1/2	F	S	P, R	DAL, IRC
RLR20C1301%&	1,300	1/2	F, G	S	P, R	DAL, IRC
RLR20C1331%&	1,330	1/2	F	S	P, R	DAL, IRC
RLR20C1371%&	1,370	1/2	F	S	P, R	DAL, IRC
RLR20C1401%&	1,400	1/2	F	S	P, R	DAL, IRC
RLR20C1431%&	1,430	1/2	F	S	P, R	DAL, IRC
RLR20C1471%&	1,470	1/2	F	S	P, R	DAL, IRC
RLR20C1501%&	1,500	1/2	F, G	S	P, R	DAL, IRC
RLR20C1541%&	1,540	1/2	F	S	P, R	DAL, IRC
RLR20C1581%&	1,580	1/2	F	S	P, R	DAL, IRC
RLR20C1601%&	1,600	1/2	G	S	P, R	DAL, IRC
RLR20C1621%&	1,620	1/2	F	S	P, R	DAL, IRC
RLR20C1651%&	1,650	1/2	F	S	P, R	DAL, IRC
RLR20C1691%&	1,690	1/2	F	S	P, R	DAL, IRC
RLR20C1741%&	1,740	1/2	F	S	P, R	DAL, IRC
RLR20C1781%&	1,780	1/2	F	S	P, R	DAL, IRC
RLR20C1801%&	1,800	1/2	G	S	P, R	DAL, IRC
RLR20C1821%&	1,820	1/2	F	S	P, R	DAL, IRC
RLR20C1871%&	1,870	1/2	F	S	P, R	DAL, IRC
RLR20C1911%&	1,910	1/2	F	S	P, R	DAL, IRC
RLR20C1961%&	1,960	1/2	F	S	P, R	DAL, IRC
RLR20C2001%&	2,000	1/2	F, G	S	P, R	DAL, IRC
RLR20C2051%&	2,050	1/2	F	S	P, R	DAL, IRC
RLR20C2101%&	2,100	1/2	F	S	P, R	DAL, IRC
RLR20C2151%&	2,150	1/2	F	S	P, R	DAL, IRC
RLR20C2201%&	2,200	1/2	G	S	P, R	DAL, IRC
RLR20C2211%&	2,210	1/2	F	S	P, R	DAL, IRC
RLR20C2261%&	2,260	1/2	F	S	P, R	DAL, IRC
RLR20C2321%&	2,320	1/2	F	S	P, R	DAL, IRC
RLR20C2371%&	2,370	1/2	F	S	P, R	DAL, IRC
RLR20C2401%&	2,400	1/2	G	S	P, R	DAL, IRC
RLR20C2431%&	2,430	1/2	F	S	P, R	DAL, IRC
RLR20C2491%&	2,490	1/2	F	S	P, R	DAL, IRC
RLR20C2551%&	2,550	1/2	F	S	P, R	DAL, IRC
RLR20C2611%&	2,610	1/2	F	S	P, R	DAL, IRC
RLR20C2671%&	2,670	1/2	F	S	P, R	DAL, IRC
RLR20C2701%&	2,700	1/2	G	S	P, R	DAL, IRC
RLR20C2741%&	2,740	1/2	F	S	P, R	DAL, IRC
RLR20C2801%&	2,800	1/2	F	S	P, R	DAL, IRC

RLR20C2871%&	2,870	1/2	F	S	P, R	DAL, IRC
RLR20C2941%&	2,940	1/2	F	S	P, R	DAL, IRC
RLR20C3001%&	3,000	1/2	G	S	P, R	DAL, IRC
RLR20C3011%&	3,010	1/2	F	S	P, R	DAL, IRC
RLR20C3091%&	3,090	1/2	F	S	P, R	DAL, IRC
RLR20C3161%&	3,160	1/2	F	S	P, R	DAL, IRC
RLR20C3241%&	3,240	1/2	F	S	P, R	DAL, IRC
RLR20C3301%&	3,300	1/2	G	S	P, R	DAL, IRC
RLR20C3321%&	3,320	1/2	F	S	P, R	DAL, IRC
RLR20C3401%&	3,400	1/2	F	S	P, R	DAL, IRC
RLR20C3481%&	3,480	1/2	F	S	P, R	DAL, IRC
RLR20C3571%&	3,570	1/2	F	S	P, R	DAL, IRC
RLR20C3601%&	3,600	1/2	G	S	P, R	DAL, IRC
RLR20C3651%&	3,650	1/2	F	S	P, R	DAL, IRC
RLR20C3741%&	3,740	1/2	F	S	P, R	DAL, IRC
RLR20C3831%&	3,830	1/2	F	S	P, R	DAL, IRC
RLR20C3901%&	3,900	1/2	G	S	P, R	DAL, IRC
RLR20C3921%&	3,920	1/2	F	S	P, R	DAL, IRC
RLR20C4021%&	4,020	1/2	F	S	P, R	DAL, IRC
RLR20C4121%&	4,120	1/2	F	S	P, R	DAL, IRC
RLR20C4221%&	4,220	1/2	F	S	P, R	DAL, IRC
RLR20C4301%&	4,300	1/2	G	S	P, R	DAL, IRC
RLR20C4321%&	4,320	1/2	F	S	P, R	DAL, IRC
RLR20C4421%&	4,420	1/2	F	S	P, R	DAL, IRC
RLR20C4531%&	4,530	1/2	F	S	P, R	DAL, IRC
RLR20C4641%&	4,640	1/2	F	S	P, R	DAL, IRC
RLR20C4701%&	4,700	1/2	G	S	P, R	DAL, IRC
RLR20C4751%&	4,750	1/2	F	S	P, R	DAL, IRC
RLR20C4871%&	4,870	1/2	F	S	P, R	DAL, IRC
RLR20C4991%&	4,990	1/2	F	S	P, R	DAL, IRC
RLR20C5101%&	5,100	1/2	G	S	P, R	DAL, IRC
RLR20C5111%&	5,110	1/2	F	S	P, R	DAL, IRC
RLR20C5231%&	5,230	1/2	F	S	P, R	DAL, IRC
RLR20C5361%&	5,360	1/2	F	S	P, R	DAL, IRC
RLR20C5491%&	5,490	1/2	F	S	P, R	DAL, IRC
RLR20C5601%&	5,600	1/2	G	S	P, R	DAL, IRC
RLR20C5621%&	5,620	1/2	F	S	P, R	DAL, IRC
RLR20C5761%&	5,760	1/2	F	S	P, R	DAL, IRC
RLR20C5901%&	5,900	1/2	F	S	P, R	DAL, IRC
RLR20C6041%&	6,040	1/2	F	S	P, R	DAL, IRC
RLR20C6191%&	6,190	1/2	F	S	P, R	DAL, IRC
RLR20C6201%&	6,200	1/2	G	S	P, R	DAL, IRC
RLR20C6341%&	6,340	1/2	F	S	P, R	DAL, IRC
RLR20C6491%&	6,490	1/2	F	S	P, R	DAL, IRC
RLR20C6651%&	6,650	1/2	F	S	P, R	DAL, IRC
RLR20C6801%&	6,800	1/2	G	S	P, R	DAL, IRC
RLR20C6811%&	6,810	1/2	F	S	P, R	DAL, IRC

RLR20C6981%&	6,980	1/2	F	S	P, R	DAL, IRC
RLR20C7151%&	7,150	1/2	F	S	P, R	DAL, IRC
RLR20C7321%&	7,320	1/2	F	S	P, R	DAL, IRC
RLR20C7501%&	7,500	1/2	F	S	P, R	DAL, IRC
RLR20C7681%&	7,680	1/2	F	S	P, R	DAL, IRC
RLR20C7871%&	7,870	1/2	F	S	P, R	DAL, IRC
RLR20C8061%&	8,060	1/2	F	S	P, R	DAL, IRC
RLR20C8201%&	8,200	1/2	G	S	P, R	DAL, IRC
RLR20C8251%&	8,250	1/2	F	S	P, R	DAL, IRC
RLR20C8451%&	8,450	1/2	F	S	P, R	DAL, IRC
RLR20C8671%&	8,670	1/2	F	S	P, R	DAL, IRC
RLR20C8871%&	8,870	1/2	F	S	P, R	DAL, IRC
RLR20C9091%&	9,090	1/2	F	S	P, R	DAL, IRC
RLR20C9101%&	9,100	1/2	G	S	P, R	DAL, IRC
RLR20C9311%&	9,310	1/2	F	S	P, R	DAL, IRC
RLR20C9531%&	9,530	1/2	F	S	P, R	DAL, IRC
RLR20C9761%&	9,760	1/2	F	S	P, R	DAL, IRC
RLR20C1002%&	10,000	1/2	F, G	S	P, R	DAL, IRC
RLR20C1022%&	10,200	1/2	F	S	P, R	DAL, IRC
RLR20C1052%&	10,500	1/2	F	S	P, R	DAL, IRC
RLR20C1072%&	10,700	1/2	F	S	P, R	DAL, IRC
RLR20C1102%&	11,000	1/2	F, G	S	P, R	DAL, IRC
RLR20C1132%&	11,300	1/2	F	S	P, R	DAL, IRC
RLR20C1152%&	11,500	1/2	F	S	P, R	DAL, IRC
RLR20C1182%&	11,800	1/2	F	S	P, R	DAL, IRC
RLR20C1202%&	12,000	1/2	G	S	P, R	DAL, IRC
RLR20C1212%&	12,100	1/2	F	S	P, R	DAL, IRC
RLR20C1242%&	12,400	1/2	F	S	P, R	DAL, IRC
RLR20C1272%&	12,700	1/2	F	S	P, R	DAL, IRC
RLR20C1302%&	13,000	1/2	F, G	S	P, R	DAL, IRC
RLR20C1332%&	13,300	1/2	F	S	P, R	DAL, IRC
RLR20C1372%&	13,700	1/2	F	S	P, R	DAL, IRC
RLR20C1402%&	14,000	1/2	F	S	P, R	DAL, IRC
RLR20C1432%&	14,300	1/2	F	S	P, R	DAL, IRC
RLR20C1472%&	14,700	1/2	F	S	P, R	DAL, IRC
RLR20C1502%&	15,000	1/2	F, G	S	P, R	DAL, IRC
RLR20C1542%&	15,400	1/2	F	S	P, R	DAL, IRC
RLR20C1582%&	15,800	1/2	F	S	P, R	DAL, IRC
RLR20C1602%&	16,000	1/2	G	S	P, R	DAL, IRC
RLR20C1622%&	16,200	1/2	F	S	P, R	DAL, IRC
RLR20C1652%&	16,500	1/2	F	S	P, R	DAL, IRC
RLR20C1692%&	16,900	1/2	F	S	P, R	DAL, IRC
RLR20C1742%&	17,400	1/2	F	S	P, R	DAL, IRC
RLR20C1782%&	17,800	1/2	F	S	P, R	DAL, IRC
RLR20C1802%&	18,000	1/2	G	S	P, R	DAL, IRC
RLR20C1822%&	18,200	1/2	F	S	P, R	DAL, IRC
RLR20C1872%&	18,700	1/2	F	S	P, R	DAL, IRC

RLR20C1912%&	19,100	1/2	F	S	P, R	DAL, IRC
RLR20C1962%&	19,600	1/2	F	S	P, R	DAL, IRC
RLR20C2002%&	20,000	1/2	F, G	S	P, R	DAL, IRC
RLR20C2052%&	20,500	1/2	F	S	P, R	DAL, IRC
RLR20C2102%&	21,000	1/2	F	S	P, R	DAL, IRC
RLR20C2152%&	21,500	1/2	F	S	P, R	DAL, IRC
RLR20C2202%&	22,000	1/2	G	S	P, R	DAL, IRC
RLR20C2212%&	22,100	1/2	F	S	P, R	DAL, IRC
RLR20C2262%&	22,600	1/2	F	S	P, R	DAL, IRC
RLR20C2322%&	23,200	1/2	F	S	P, R	DAL, IRC
RLR20C2372%&	23,700	1/2	F	S	P, R	DAL, IRC
RLR20C2402%&	24,000	1/2	G	S	P, R	DAL, IRC
RLR20C2432%&	24,300	1/2	F	S	P, R	DAL, IRC
RLR20C2492%&	24,900	1/2	F	S	P, R	DAL, IRC
RLR20C2552%&	25,500	1/2	F	S	P, R	DAL, IRC
RLR20C2612%&	26,100	1/2	F	S	P, R	DAL, IRC
RLR20C2672%&	26,700	1/2	F	S	P, R	DAL, IRC
RLR20C2702%&	27,000	1/2	G	S	P, R	DAL, IRC
RLR20C2742%&	27,400	1/2	F	S	P, R	DAL, IRC
RLR20C2802%&	28,000	1/2	F	S	P, R	DAL, IRC
RLR20C2872%&	28,700	1/2	F	S	P, R	DAL, IRC
RLR20C2942%&	29,400	1/2	F	S	P, R	DAL, IRC
RLR20C3002%&	30,000	1/2	G	S	P, R	DAL, IRC
RLR20C3012%&	30,100	1/2	F	S	P, R	DAL, IRC
RLR20C3092%&	30,900	1/2	F	S	P, R	DAL, IRC
RLR20C3162%&	31,600	1/2	F	S	P, R	DAL, IRC
RLR20C3242%&	32,400	1/2	F	S	P, R	DAL, IRC
RLR20C3302%&	33,000	1/2	G	S	P, R	DAL, IRC
RLR20C3322%&	33,200	1/2	F	S	P, R	DAL, IRC
RLR20C3402%&	34,000	1/2	F	S	P, R	DAL, IRC
RLR20C3482%&	34,800	1/2	F	S	P, R	DAL, IRC
RLR20C3572%&	35,700	1/2	F	S	P, R	DAL, IRC
RLR20C3602%&	36,000	1/2	G	S	P, R	DAL, IRC
RLR20C3652%&	36,500	1/2	F	S	P, R	DAL, IRC
RLR20C3742%&	37,400	1/2	F	S	P, R	DAL, IRC
RLR20C3832%&	38,300	1/2	F	S	P, R	DAL, IRC
RLR20C3902%&	39,000	1/2	G	S	P, R	DAL, IRC
RLR20C3922%&	39,200	1/2	F	S	P, R	DAL, IRC
RLR20C4022%&	40,200	1/2	F	S	P, R	DAL, IRC
RLR20C4122%&	41,200	1/2	F	S	P, R	DAL, IRC
RLR20C4222%&	42,200	1/2	F	S	P, R	DAL, IRC
RLR20C4302%&	43,000	1/2	G	S	P, R	DAL, IRC
RLR20C4322%&	43,200	1/2	F	S	P, R	DAL, IRC
RLR20C4422%&	44,200	1/2	F	S	P, R	DAL, IRC
RLR20C4532%&	45,300	1/2	F	S	P, R	DAL, IRC
RLR20C4642%&	46,400	1/2	F	S	P, R	DAL, IRC
RLR20C4702%&	47,000	1/2	G	S	P, R	DAL, IRC

RLR20C4752%&	47,500	1/2	F	S	P, R	DAL, IRC
RLR20C4872%&	48,700	1/2	F	S	P, R	DAL, IRC
RLR20C4992%&	49,900	1/2	F	S	P, R	DAL, IRC
RLR20C5102%&	51,000	1/2	G	S	P, R	DAL, IRC
RLR20C5112%&	51,100	1/2	F	S	P, R	DAL, IRC
RLR20C5232%&	52,300	1/2	F	S	P, R	DAL, IRC
RLR20C5362%&	53,600	1/2	F	S	P, R	DAL, IRC
RLR20C5492%&	54,900	1/2	F	S	P, R	DAL, IRC
RLR20C5602%&	56,000	1/2	G	S	P, R	DAL, IRC
RLR20C5622%&	56,200	1/2	F	S	P, R	DAL, IRC
RLR20C5762%&	57,600	1/2	F	S	P, R	DAL, IRC
RLR20C5902%&	59,000	1/2	F	S	P, R	DAL, IRC
RLR20C6042%&	60,400	1/2	F	S	P, R	DAL, IRC
RLR20C6192%&	61,900	1/2	F	S	P, R	DAL, IRC
RLR20C6202%&	62,000	1/2	G	S	P, R	DAL, IRC
RLR20C6342%&	63,400	1/2	F	S	P, R	DAL, IRC
RLR20C6492%&	64,900	1/2	F	S	P, R	DAL, IRC
RLR20C6652%&	66,500	1/2	F	S	P, R	DAL, IRC
RLR20C6802%&	68,000	1/2	G	S	P, R	DAL, IRC
RLR20C6812%&	68,100	1/2	F	S	P, R	DAL, IRC
RLR20C6982%&	69,800	1/2	F	S	P, R	DAL, IRC
RLR20C7152%&	71,500	1/2	F	S	P, R	DAL, IRC
RLR20C7322%&	73,200	1/2	F	S	P, R	DAL, IRC
RLR20C7502%&	75,000	1/2	F	S	P, R	DAL, IRC
RLR20C7682%&	76,800	1/2	F	S	P, R	DAL, IRC
RLR20C7872%&	78,700	1/2	F	S	P, R	DAL, IRC
RLR20C8062%&	80,600	1/2	F	S	P, R	DAL, IRC
RLR20C8202%&	82,000	1/2	G	S	P, R	DAL, IRC
RLR20C8252%&	82,500	1/2	F	S	P, R	DAL, IRC
RLR20C8452%&	84,500	1/2	F	S	P, R	DAL, IRC
RLR20C8672%&	86,700	1/2	F	S	P, R	DAL, IRC
RLR20C8872%&	88,700	1/2	F	S	P, R	DAL, IRC
RLR20C9092%&	90,900	1/2	F	S	P, R	DAL, IRC
RLR20C9102%&	91,000	1/2	G	S	P, R	DAL, IRC
RLR20C9312%&	93,100	1/2	F	S	P, R	DAL, IRC
RLR20C9532%&	95,300	1/2	F	S	P, R	DAL, IRC
RLR20C9762%&	97,600	1/2	F	S	P, R	DAL, IRC
RLR20C1003%&	100,000	1/2	F, G	S	P, R	DAL, IRC
RLR20C1023%&	102,000	1/2	F	S	P, R	DAL, IRC
RLR20C1053%&	105,000	1/2	F	S	P, R	DAL, IRC
RLR20C1073%&	107,000	1/2	F	S	P, R	DAL, IRC
RLR20C1103%&	110,000	1/2	F, G	S	P, R	DAL, IRC
RLR20C1133%&	113,000	1/2	F	S	P, R	DAL, IRC
RLR20C1153%&	115,000	1/2	F	S	P, R	DAL, IRC
RLR20C1183%&	118,000	1/2	F	S	P, R	DAL, IRC
RLR20C1203%&	120,000	1/2	G	S	P, R	DAL, IRC
RLR20C1213%&	121,000	1/2	F	S	P, R	DAL, IRC

RLR20C1243%&	124,000	1/2	F	S	P, R	DAL, IRC
RLR20C1273%&	127,000	1/2	F	S	P, R	DAL, IRC
RLR20C1303%&	130,000	1/2	F, G	S	P, R	DAL, IRC
RLR20C1333%&	133,000	1/2	F	S	P, R	DAL, IRC
RLR20C1373%&	137,000	1/2	F	S	P, R	DAL, IRC
RLR20C1403%&	140,000	1/2	F	S	P, R	DAL, IRC
RLR20C1433%&	143,000	1/2	F	S	P, R	DAL, IRC
RLR20C1473%&	147,000	1/2	F	S	P, R	DAL, IRC
RLR20C1503%&	150,000	1/2	F, G	S	P, R	DAL, IRC
RLR20C1543%&	154,000	1/2	F	S	P, R	DAL, IRC
RLR20C1583%&	158,000	1/2	F	S	P, R	DAL, IRC
RLR20C1603%&	160,000	1/2	G	S	P, R	DAL, IRC
RLR20C1623%&	162,000	1/2	F	S	P, R	DAL, IRC
RLR20C1653%&	165,000	1/2	F	S	P, R	DAL, IRC
RLR20C1693%&	169,000	1/2	F	S	P, R	DAL, IRC
RLR20C1743%&	174,000	1/2	F	S	P, R	DAL, IRC
RLR20C1783%&	178,000	1/2	F	S	P, R	DAL, IRC
RLR20C1803%&	180,000	1/2	G	S	P, R	DAL, IRC
RLR20C1823%&	182,000	1/2	F	S	P, R	DAL, IRC
RLR20C1873%&	187,000	1/2	F	S	P, R	DAL, IRC
RLR20C1913%&	191,000	1/2	F	S	P, R	DAL, IRC
RLR20C1963%&	196,000	1/2	F	S	P, R	DAL, IRC
RLR20C2003%&	200,000	1/2	F, G	S	P, R	DAL, IRC
RLR20C2053%&	205,000	1/2	F	S	P, R	DAL, IRC
RLR20C2103%&	210,000	1/2	F	S	P, R	DAL, IRC
RLR20C2153%&	215,000	1/2	F	S	P, R	DAL, IRC
RLR20C2203%&	220,000	1/2	G	S	P, R	DAL, IRC
RLR20C2213%&	221,000	1/2	F	S	P, R	DAL, IRC
RLR20C2263%&	226,000	1/2	F	S	P, R	DAL, IRC
RLR20C2323%&	232,000	1/2	F	S	P, R	DAL, IRC
RLR20C2373%&	237,000	1/2	F	S	P, R	DAL, IRC
RLR20C2403%&	240,000	1/2	G	S	P, R	DAL, IRC
RLR20C2433%&	243,000	1/2	F	S	P, R	DAL, IRC
RLR20C2493%&	249,000	1/2	F	S	P, R	DAL, IRC
RLR20C2553%&	255,000	1/2	F	S	P, R	DAL, IRC
RLR20C2613%&	261,000	1/2	F	S	P, R	DAL, IRC
RLR20C2673%&	267,000	1/2	F	S	P, R	DAL, IRC
RLR20C2703%&	270,000	1/2	G	S	P, R	DAL, IRC
RLR20C2743%&	274,000	1/2	F	S	P, R	DAL, IRC
RLR20C2803%&	280,000	1/2	F	S	P, R	DAL, IRC
RLR20C2873%&	287,000	1/2	F	S	P, R	DAL, IRC
RLR20C2943%&	294,000	1/2	F	S	P, R	DAL, IRC
RLR20C3003%&	300,000	1/2	G	S	P, R	DAL, IRC
RLR20C3013%&	301,000	1/2	F	S	P, R	DAL, IRC
RLR20C3093%&	309,000	1/2	F	S	P, R	DAL, IRC
RLR20C3163%&	316,000	1/2	F	S	P, R	DAL, IRC
RLR20C3243%&	324,000	1/2	F	S	P, R	DAL, IRC

RLR20C3303%&	330,000	1/2	G	S	P, R	DAL, IRC
RLR20C3323%&	332,000	1/2	F	S	P, R	DAL, IRC
RLR20C3403%&	340,000	1/2	F	S	P, R	DAL, IRC
RLR20C3483%&	348,000	1/2	F	S	P, R	DAL, IRC
RLR20C3573%&	357,000	1/2	F	S	P, R	DAL, IRC
RLR20C3603%&	360,000	1/2	G	S	P, R	DAL, IRC
RLR20C3653%&	365,000	1/2	F	S	P, R	DAL, IRC
RLR20C3743%&	374,000	1/2	F	S	P, R	DAL, IRC
RLR20C3833%&	383,000	1/2	F	S	P, R	DAL, IRC
RLR20C3903%&	390,000	1/2	G	S	P, R	DAL, IRC
RLR20C3923%&	392,000	1/2	F	S	P, R	DAL, IRC
RLR20C4023%&	402,000	1/2	F	S	P, R	DAL, IRC
RLR20C4123%&	412,000	1/2	F	S	P, R	DAL, IRC
RLR20C4223%&	422,000	1/2	F	S	P, R	DAL, IRC
RLR20C4303%&	430,000	1/2	G	S	P, R	DAL, IRC
RLR20C4323%&	432,000	1/2	F	S	P, R	DAL, IRC
RLR20C4423%&	442,000	1/2	F	S	P, R	DAL, IRC
RLR20C4533%&	453,000	1/2	F	S	P, R	DAL, IRC
RLR20C4643%&	464,000	1/2	F	S	P, R	DAL, IRC
RLR20C4703%&	470,000	1/2	G	S	P, R	DAL, IRC
RLR20C4753%&	475,000	1/2	F	S	P, R	DAL, IRC
RLR20C4873%&	487,000	1/2	F	S	P, R	DAL, IRC
RLR20C4993%&	499,000	1/2	F	S	P, R	DAL, IRC
RLR20C5103%&	510,000	1/2	G	S	P, R	DAL, IRC
RLR20C5113%&	511,000	1/2	F	S	P, R	DAL, IRC
RLR20C5233%&	523,000	1/2	F	S	P, R	DAL, IRC
RLR20C5363%&	536,000	1/2	F	S	P, R	DAL, IRC
RLR20C5493%&	549,000	1/2	F	S	P, R	DAL, IRC
RLR20C5603%&	560,000	1/2	G	S	P, R	DAL, IRC
RLR20C5623%&	562,000	1/2	F	S	P, R	DAL, IRC
RLR20C5763%&	576,000	1/2	F	S	P, R	DAL, IRC
RLR20C5903%&	590,000	1/2	F	S	P, R	DAL, IRC
RLR20C6043%&	604,000	1/2	F	S	P, R	DAL, IRC
RLR20C6193%&	619,000	1/2	F	S	P, R	DAL, IRC
RLR20C6203%&	620,000	1/2	G	S	P, R	DAL, IRC
RLR20C6343%&	634,000	1/2	F	S	P, R	DAL, IRC
RLR20C6493%&	649,000	1/2	F	S	P, R	DAL, IRC
RLR20C6653%&	665,000	1/2	F	S	P, R	DAL, IRC
RLR20C6803%&	680,000	1/2	G	S	P, R	DAL, IRC
RLR20C6813%&	681,000	1/2	F	S	P, R	DAL, IRC
RLR20C6983%&	698,000	1/2	F	S	P, R	DAL, IRC
RLR20C7153%&	715,000	1/2	F	S	P, R	DAL, IRC
RLR20C7323%&	732,000	1/2	F	S	P, R	DAL, IRC
RLR20C7503%&	750,000	1/2	F	S	P, R	DAL, IRC
RLR20C7683%&	768,000	1/2	F	S	P, R	DAL, IRC
RLR20C7873%&	787,000	1/2	F	S	P, R	DAL, IRC
RLR20C8063%&	806,000	1/2	F	S	P, R	DAL, IRC

RLR20C8203%&	820,000	1/2	G	S	P, R	DAL, IRC
RLR20C8253%&	825,000	1/2	F	S	P, R	DAL, IRC
RLR20C8453%&	845,000	1/2	F	S	P, R	DAL, IRC
RLR20C8673%&	867,000	1/2	F	S	P, R	DAL, IRC
RLR20C8873%&	887,000	1/2	F	S	P, R	DAL, IRC
RLR20C9093%&	909,000	1/2	F	S	P, R	DAL, IRC
RLR20C9103%&	910,000	1/2	G	S	P, R	DAL, IRC
RLR20C9313%&	931,000	1/2	F	S	P, R	DAL, IRC
RLR20C9533%&	953,000	1/2	F	S	P, R	DAL, IRC
RLR20C9763%&	976,000	1/2	F	S	P, R	DAL, IRC
RLR20C1004%&	1,000,000	1/2	F, G	S	P, R	DAL, IRC
RLR20C1024%&	1,020,000	1/2	F	S	P, R	IRC
RLR20C1054%&	1,050,000	1/2	F	S	P, R	IRC
RLR20C1074%&	1,070,000	1/2	F	S	P, R	IRC
RLR20C1104%&	1,100,000	1/2	F, G	S	P, R	IRC
RLR20C1134%&	1,130,000	1/2	F	S	P, R	IRC
RLR20C1154%&	1,150,000	1/2	F	S	P, R	IRC
RLR20C1184%&	1,180,000	1/2	F	S	P, R	IRC
RLR20C1204%&	1,200,000	1/2	G	S	P, R	IRC
RLR20C1214%&	1,210,000	1/2	F	S	P, R	IRC
RLR20C1244%&	1,240,000	1/2	F	S	P, R	IRC
RLR20C1274%&	1,270,000	1/2	F	S	P, R	IRC
RLR20C1304%&	1,300,000	1/2	F, G	S	P, R	IRC
RLR20C1334%&	1,330,000	1/2	F	S	P, R	IRC
RLR20C1374%&	1,370,000	1/2	F	S	P, R	IRC
RLR20C1404%&	1,400,000	1/2	F	S	P, R	IRC
RLR20C1434%&	1,430,000	1/2	F	S	P, R	IRC
RLR20C1474%&	1,470,000	1/2	F	S	P, R	IRC
RLR20C1504%&	1,500,000	1/2	F, G	S	P, R	IRC
RLR20C1544%&	1,540,000	1/2	F	S	P, R	IRC
RLR20C1584%&	1,580,000	1/2	F	S	P, R	IRC
RLR20C1604%&	1,600,000	1/2	G	S	P, R	IRC
RLR20C1624%&	1,620,000	1/2	F	S	P, R	IRC
RLR20C1654%&	1,650,000	1/2	F	S	P, R	IRC
RLR20C1694%&	1,690,000	1/2	F	S	P, R	IRC
RLR20C1744%&	1,740,000	1/2	F	S	P, R	IRC
RLR20C1784%&	1,780,000	1/2	F	S	P, R	IRC
RLR20C1804%&	1,800,000	1/2	G	S	P, R	IRC
RLR20C1824%&	1,820,000	1/2	F	S	P, R	IRC
RLR20C1874%&	1,870,000	1/2	F	S	P, R	IRC
RLR20C1914%&	1,910,000	1/2	F	S	P, R	IRC
RLR20C1964%&	1,960,000	1/2	F	S	P, R	IRC
RLR20C2004%&	2,000,000	1/2	F, G	S	P, R	IRC
RLR20C2054%&	2,050,000	1/2	F	S	P, R	IRC
RLR20C2104%&	2,100,000	1/2	F	S	P, R	IRC
RLR20C2154%&	2,150,000	1/2	F	S	P, R	IRC
RLR20C2204%&	2,200,000	1/2	G	S	P, R	IRC

RLR20C2214%&	2,210,000	1/2	F	S	P, R	IRC
RLR20C2264%&	2,260,000	1/2	F	S	P, R	IRC
RLR20C2324%&	2,320,000	1/2	F	S	P, R	IRC
RLR20C2374%&	2,370,000	1/2	F	S	P, R	IRC
RLR20C2404%&	2,400,000	1/2	G	S	P, R	IRC
RLR20C2434%&	2,430,000	1/2	F	S	P, R	IRC
RLR20C2494%&	2,490,000	1/2	F	S	P, R	IRC
RLR20C2554%&	2,550,000	1/2	F	S	P, R	IRC
RLR20C2614%&	2,610,000	1/2	F	S	P, R	IRC
RLR20C2674%&	2,670,000	1/2	F	S	P, R	IRC
RLR20C2704%&	2,700,000	1/2	G	S	P, R	IRC
RLR20C2744%&	2,740,000	1/2	F	S	P, R	IRC
RLR20C2804%&	2,800,000	1/2	F	S	P, R	IRC
RLR20C2874%&	2,870,000	1/2	F	S	P, R	IRC
RLR20C2944%&	2,940,000	1/2	F	S	P, R	IRC
RLR20C3004%&	3,000,000	1/2	G	S	P, R	IRC
RLR20C3014%&	3,010,000	1/2	F	S	P, R	IRC

RLR20 RESISTORS DECADE BREAKDOWN

Click on the link below to see the associated parts selection listing:

Resistance Range
4.30 Ohms through 9.76 Ohms
10.0 Ohms through 97.6 Ohms
100 Ohms through 976 Ohms
1,000 Ohms through 9,760 Ohms
10,000 Ohms through 97,600 Ohms
100,000 Ohms through 976,000 Ohms
1,000,000 Ohms through 3,01,000 Ohms

RLR20 Film Resistors: 4.30 Ohms through 9.76 Ohms

	Resistance	Power	Resistance	Level 1	Level 2	
Part Number	Value (Ohms)	Rating (W)	Tolerance (%)	(FRL)(&)	(FRL)(&)	Manufacturer
RLR20C4R30%&	4.30	1/2	G	S	P, R	DAL, IRC
RLR20C4R32%&	4.32	1/2	F	S	P, R	DAL, IRC
RLR20C4R42%&	4.42	1/2	F	S	P, R	DAL, IRC
RLR20C4R53%&	4.53	1/2	F	S	P, R	DAL, IRC
RLR20C4R64%&	4.64	1/2	F	S	P, R	DAL, IRC
RLR20C4R70%&	4.70	1/2	G	S	P, R	DAL, IRC
RLR20C4R75%&	4.75	1/2	F	S	P, R	DAL, IRC
RLR20C4R87%&	4.87	1/2	F	S	P, R	DAL, IRC
RLR20C4R99%&	4.99	1/2	F	S	P, R	DAL, IRC
RLR20C5R10%&	5.10	1/2	G	S	P, R	DAL, IRC

RLR20C5R11%&	5.11	1/2	F	S	P, R	DAL, IRC
RLR20C5R23%&	5.23	1/2	F	S	P, R	DAL, IRC
RLR20C5R36%&	5.36	1/2	F	S	P, R	DAL, IRC
RLR20C5R49%&	5.49	1/2	F	S	P, R	DAL, IRC
	Resistance	Power	Resistance	Level 1	Level 2	
Part Number	Value (Ohms)	Rating (W)	Tolerance (%)	(FRL)(&)	(FRL)(&)	Manufacturer
RLR20C5R60%&	5.60	1/2	G	S	P, R	DAL, IRC
RLR20C5R62%&	5.62	1/2	F	S	P, R	DAL, IRC
RLR20C5R76%&	5.76	1/2	F	S	P, R	DAL, IRC
RLR20C5R90%&	5.90	1/2	F	S	P, R	DAL, IRC
RLR20C6R04%&	6.04	1/2	F	S	P, R	DAL, IRC
RLR20C6R19%&	6.19	1/2	F	S	P, R	DAL, IRC
RLR20C6R20%&	6.20	1/2	G	S	P, R	DAL, IRC
RLR20C6R34%&	6.34	1/2	F	S	P, R	DAL, IRC
RLR20C6R49%&	6.49	1/2	F	S	P, R	DAL, IRC
RLR20C6R65%&	6.65	1/2	F	S	P, R	DAL, IRC
RLR20C6R80%&	6.80	1/2	G	S	P, R	DAL, IRC
RLR20C6R81%&	6.81	1/2	F	S	P, R	DAL, IRC
RLR20C6R98%&	6.98	1/2	F	S	P, R	DAL, IRC
RLR20C7R15%&	7.15	1/2	F	S	P, R	DAL, IRC
	Resistance	Power	Resistance	Level 1	Level 2	
Part Number	Value (Ohms)	Rating (W)	Tolerance (%)	(FRL)(&)	(FRL)(&)	Manufacturer
RLR20C7R32%&	7.32	1/2	F	S	P, R	DAL, IRC
RLR20C7R50%&	7.50	1/2	F	S	P, R	DAL, IRC
RLR20C7R68%&	7.68	1/2	F	S	P, R	DAL, IRC
RLR20C7R87%&	7.87	1/2	F	S	P, R	DAL, IRC
RLR20C8R06%&	8.06	1/2	F	S	P, R	DAL, IRC
RLR20C8R20%&	8.20	1/2	G	S	P, R	DAL, IRC
RLR20C8R25%&	8.25	1/2	F	S	P, R	DAL, IRC
RLR20C8R45%&	8.45	1/2	F	S	P, R	DAL, IRC
RLR20C8R67%&	8.67	1/2	F	S	P, R	DAL, IRC
RLR20C8R87%&	8.87	1/2	F	S	P, R	DAL, IRC
RLR20C9R09%&	9.09	1/2	F	S	P, R	DAL, IRC
RLR20C9R10%&	9.10	1/2	G	S	P, R	DAL, IRC
RLR20C9R31%&	9.31	1/2	F	S	P, R	DAL, IRC
RLR20C9R53%&	9.53	1/2	F	S	P, R	DAL, IRC
RLR20C9R76%&	9.76	1/2	F	S	P, R	DAL, IRC
	Resistance	Power	Resistance	Level 1	Level 2	
Part Number	Value (Ohms)	Rating (W)	Tolerance (%)	(FRL)(&)	(FRL)(&)	Manufacturer

RLR20 Film Resistors: 10.0 Ohms through 97.6 Ohms

	Resistance	Power	Resistance	Level 1	Level 2	
Part Number	Value (Ohms)	Rating (W)	Tolerance (%)	(FRL)(&)	(FRL)(&)	Manufacturer
RLR20C10R0%&	10.0	1/2	F, G	S	P, R	DAL, IRC

RLR20C10R2%&	10.2	1/2	F	S	P, R	DAL, IRC
RLR20C10R5%&	10.5	1/2	F	S	P, R	DAL, IRC
RLR20C10R7%&	10.7	1/2	F	S	P, R	DAL, IRC
RLR20C11R0%&	11.0	1/2	F, G	S	P, R	DAL, IRC
RLR20C11R3%&	11.3	1/2	F	S	P, R	DAL, IRC
RLR20C11R5%&	11.5	1/2	F	S	P, R	DAL, IRC
RLR20C11R8%&	11.8	1/2	F	S	P, R	DAL, IRC
RLR20C12R0%&	12.0	1/2	G	S	P, R	DAL, IRC
RLR20C12R1%&	12.1	1/2	F	S	P, R	DAL, IRC
RLR20C12R4%&	12.4	1/2	F	S	P, R	DAL, IRC
RLR20C12R7%&	12.7	1/2	F	S	P, R	DAL, IRC
RLR20C13R0%&	13.0	1/2	F, G	S	P, R	DAL, IRC
RLR20C13R3%&	13.3	1/2	F	S	P, R	DAL, IRC
	Resistance	Power	Resistance	Level 1	Level 2	
Part Number	Value (Ohms)	Rating (W)	Tolerance (%)	(FRL)(&)	(FRL)(&)	Manufacturer
RLR20C13R7%&	13.7	1/2	F	S	P, R	DAL, IRC
RLR20C14R0%&	14.0	1/2	F	S	P, R	DAL, IRC
RLR20C14R3%&	14.3	1/2	F	S	P, R	DAL, IRC
RLR20C14R7%&	14.7	1/2	F	S	P, R	DAL, IRC
RLR20C15R0%&	15.0	1/2	F, G	S	P, R	DAL, IRC
RLR20C15R4%&	15.4	1/2	F	S	P, R	DAL, IRC
RLR20C15R8%&	15.8	1/2	F	S	P, R	DAL, IRC
RLR20C16R0%&	16.0	1/2	G	S	P, R	DAL, IRC
RLR20C16R2%&	16.2	1/2	F	S	P, R	DAL, IRC
RLR20C16R5%&	16.5	1/2	F	S	P, R	DAL, IRC
RLR20C16R9%&	16.9	1/2	F	S	P, R	DAL, IRC
RLR20C17R4%&	17.4	1/2	F	S	P, R	DAL, IRC
RLR20C17R8%&	17.8	1/2	F	S	P, R	DAL, IRC
RLR20C18R0%&	18.0	1/2	G	S	P, R	DAL, IRC
	Resistance	Power	Resistance	Level 1	Level 2	
Part Number	Value (Ohms)	Rating (W)	Tolerance (%)	(FRL)(&)	(FRL)(&)	Manufacturer
RLR20C18R2%&	18.2	1/2	F	S	P, R	DAL, IRC
RLR20C18R7%&	18.7	1/2	F	S	P, R	DAL, IRC
RLR20C19R1%&	19.1	1/2	F	S	P, R	DAL, IRC
RLR20C19R6%&	19.6	1/2	F	S	P, R	DAL, IRC
RLR20C20R0%&	20.0	1/2	F, G	S	P, R	DAL, IRC
RLR20C20R5%&	20.5	1/2	F	S	P, R	DAL, IRC
RLR20C21R0%&	21.0	1/2	F	S	P, R	DAL, IRC
RLR20C21R5%&	21.5	1/2	F	S	P, R	DAL, IRC
RLR20C22R0%&	22.0	1/2	G	S	P, R	DAL, IRC
RLR20C22R1%&	22.1	1/2	F	S	P, R	DAL, IRC
RLR20C22R6%&	22.6	1/2	F	S	P, R	DAL, IRC
RLR20C23R2%&	23.2	1/2	F	S	P, R	DAL, IRC
RLR20C23R7%&	23.7	1/2	F	S	P, R	DAL, IRC
RLR20C24R0%&	24.0	1/2	G	S	P, R	DAL, IRC
	Resistance	Power	Resistance	Level 1	Level 2	
Part Number	Value (Ohms)	Rating (W)	Tolerance (%)	(FRL)(&)	(FRL)(&)	Manufacturer

RLR20C24R3%&	24.3	1/2	F	S	P, R	DAL, IRC
RLR20C24R9%&	24.9	1/2	F	S	P, R	DAL, IRC
RLR20C25R5%&	25.5	1/2	F	S	P, R	DAL, IRC
RLR20C26R1%&	26.1	1/2	F	S	P, R	DAL, IRC
RLR20C26R7%&	26.7	1/2	F	S	P, R	DAL, IRC
RLR20C27R0%&	27.0	1/2	G	S	P, R	DAL, IRC
RLR20C27R4%&	27.4	1/2	F	S	P, R	DAL, IRC
RLR20C28R0%&	28.0	1/2	F	S	P, R	DAL, IRC
RLR20C28R7%&	28.7	1/2	F	S	P, R	DAL, IRC
RLR20C29R4%&	29.4	1/2	F	S	P, R	DAL, IRC
RLR20C30R0%&	30.0	1/2	G	S	P, R	DAL, IRC
RLR20C30R1%&	30.1	1/2	F	S	P, R	DAL, IRC
	Resistance	Power	Resistance	Level 1	Level 2	
Part Number	Value (Ohms)	Rating (W)	Tolerance (%)	(FRL)(&)	(FRL)(&)	Manufacturer
RLR20C30R9%&	30.9	1/2	F	S	P, R	DAL, IRC
RLR20C31R6%&	31.6	1/2	F	S	P, R	DAL, IRC
RLR20C32R4%&	32.4	1/2	F	S	P, R	DAL, IRC
RLR20C33R0%&	33.0	1/2	G	S	P, R	DAL, IRC
RLR20C33R2%&	33.2	1/2	F	S	P, R	DAL, IRC
RLR20C34R0%&	34.0	1/2	F	S	P, R	DAL, IRC
RLR20C34R8%&	34.8	1/2	F	S	P, R	DAL, IRC
RLR20C35R7%&	35.7	1/2	F	S	P, R	DAL, IRC
RLR20C36R0%&	36.0	1/2	G	S	P, R	DAL, IRC
RLR20C36R5%&	36.5	1/2	F	S	P, R	DAL, IRC
RLR20C37R4%&	37.4	1/2	F	S	P, R	DAL, IRC
RLR20C38R3%&	38.3	1/2	F	S	P, R	DAL, IRC
RLR20C39R0%&	39.0	1/2	G	S	P, R	DAL, IRC
RLR20C39R2%&	39.2	1/2	F	S	P, R	DAL, IRC
	Resistance	Power	Resistance	Level 1	Level 2	
Part Number	Value (Ohms)	Rating (W)	Tolerance (%)	(FRL)(&)	(FRL)(&)	Manufacturer
RLR20C40R2%&	40.2	1/2	F	S	P, R	DAL, IRC
RLR20C41R2%&	41.2	1/2	F	S	P, R	DAL, IRC
RLR20C42R2%&	42.2	1/2	F	S	P, R	DAL, IRC
RLR20C43R0%&	43.0	1/2	G	S	P, R	DAL, IRC
RLR20C43R2%&	43.2	1/2	F	S	P, R	DAL, IRC
RLR20C44R2%&	44.2	1/2	F	S	P, R	DAL, IRC
RLR20C45R3%&	45.3	1/2	F	S	P, R	DAL, IRC
RLR20C46R4%&	46.4	1/2	F	S	P, R	DAL, IRC
RLR20C47R0%&	47.0	1/2	G	S	P, R	DAL, IRC
RLR20C47R5%&	47.5	1/2	F	S	P, R	DAL, IRC
RLR20C48R7%&	48.7	1/2	F	S	P, R	DAL, IRC
RLR20C49R9%&	49.9	1/2	F	S	P, R	DAL, IRC
RLR20C51R0%&	51.0	1/2	G	S	P, R	DAL, IRC
RLR20C51R1%&	51.1	1/2	F	S	P, R	DAL, IRC
	Resistance	Power	Resistance	Level 1	Level 2	
Part Number	Value (Ohms)	Rating (W)	Tolerance (%)	(FRL)(&)	(FRL)(&)	Manufacturer
RLR20C52R3%&	52.3	1/2	F	S	P, R	DAL, IRC

RLR20C53R6%&	53.6	1/2	F	S	P, R	DAL, IRC
RLR20C54R9%&	54.9	1/2	F	S	P, R	DAL, IRC
RLR20C56R0%&	56.0	1/2	G	S	P, R	DAL, IRC
RLR20C56R2%&	56.2	1/2	F	S	P, R	DAL, IRC
RLR20C57R6%&	57.6	1/2	F	S	P, R	DAL, IRC
RLR20C59R0%&	59.0	1/2	F	S	P, R	DAL, IRC
RLR20C60R4%&	60.4	1/2	F	S	P, R	DAL, IRC
RLR20C61R9%&	61.9	1/2	F	S	P, R	DAL, IRC
RLR20C62R0%&	62.0	1/2	G	S	P, R	DAL, IRC
RLR20C63R4%&	63.4	1/2	F	S	P, R	DAL, IRC
RLR20C64R9%&	64.9	1/2	F	S	P, R	DAL, IRC
RLR20C66R5%&	66.5	1/2	F	S	P, R	DAL, IRC
RLR20C68R0%&	68.0	1/2	G	S	P, R	DAL, IRC
	Resistance	Power	Resistance	Level 1	Level 2	
Part Number	Value (Ohms)	Rating (W)	Tolerance (%)	(FRL)(&)	(FRL)(&)	Manufacturer
RLR20C68R1%&	68.1	1/2	F	S	P, R	DAL, IRC
RLR20C69R8%&	69.8	1/2	F	S	P, R	DAL, IRC
RLR20C71R5%&	71.5	1/2	F	S	P, R	DAL, IRC
RLR20C73R2%&	73.2	1/2	F	S	P, R	DAL, IRC
RLR20C75R0%&	75.0	1/2	F	S	P, R	DAL, IRC
RLR20C76R8%&	76.8	1/2	F	S	P, R	DAL, IRC
RLR20C78R7%&	78.7	1/2	F	S	P, R	DAL, IRC
RLR20C80R6%&	80.6	1/2	F	S	P, R	DAL, IRC
RLR20C82R0%&	82.0	1/2	G	S	P, R	DAL, IRC
RLR20C82R5%&	82.5	1/2	F	S	P, R	DAL, IRC
RLR20C84R5%&	84.5	1/2	F	S	P, R	DAL, IRC
RLR20C86R7%&	86.7	1/2	F	S	P, R	DAL, IRC
RLR20C88R7%&	88.7	1/2	F	S	P, R	DAL, IRC
RLR20C90R9%&	90.9	1/2	F	S	P, R	DAL, IRC
	Resistance	Power	Resistance	Level 1	Level 2	
Part Number	Value (Ohms)	Rating (W)	Tolerance (%)	(FRL)(&)	(FRL)(&)	Manufacturer
RLR20C91R0%&	91.0	1/2	G	S	P, R	DAL, IRC
RLR20C93R1%&	93.1	1/2	F	S	P, R	DAL, IRC
RLR20C95R3%&	95.3	1/2	F	S	P, R	DAL, IRC
RLR20C97R6%&	97.6	1/2	F	S	P, R	DAL, IRC

RLR20 Film Resistors: 100 Ohms through 976 Ohms

	Resistance	Power	Resistance	Level 1	Level 2	
Part Number	Value (Ohms)	Rating (W)	Tolerance (%)	(FRL)(&)	(FRL)(&)	Manufacturer
RLR20C1000%&	100	1/2	F, G	S	P, R	DAL, IRC
RLR20C1020%&	102	1/2	F	S	P, R	DAL, IRC
RLR20C1050%&	105	1/2	F	S	P, R	DAL, IRC
RLR20C1070%&	107	1/2	F	S	P, R	DAL, IRC
RLR20C1100%&	110	1/2	F, G	S	P, R	DAL, IRC

RLR20C1130%&	113	1/2	F	S	P, R	DAL, IRC
RLR20C1150%&	115	1/2	F	S	P, R	DAL, IRC
RLR20C1180%&	118	1/2	F	S	P, R	DAL, IRC
RLR20C1200%&	120	1/2	G	S	P, R	DAL, IRC
RLR20C1210%&	121	1/2	F	S	P, R	DAL, IRC
RLR20C1240%&	124	1/2	F	S	P, R	DAL, IRC
RLR20C1270%&	127	1/2	F	S	P, R	DAL, IRC
RLR20C1300%&	130	1/2	F, G	S	P, R	DAL, IRC
RLR20C1330%&	133	1/2	F	S	P, R	DAL, IRC
	Resistance	Power	Resistance	Level 1	Level 2	
Part Number	Value (Ohms)	Rating (W)	Tolerance (%)	(FRL)(&)	(FRL)(&)	Manufacturer
RLR20C1370%&	137	1/2	F	S	P, R	DAL, IRC
RLR20C1400%&	140	1/2	F	S	P, R	DAL, IRC
RLR20C1430%&	143	1/2	F	S	P, R	DAL, IRC
RLR20C1470%&	147	1/2	F	S	P, R	DAL, IRC
RLR20C1500%&	150	1/2	F, G	S	P, R	DAL, IRC
RLR20C1540%&	154	1/2	F	S	P, R	DAL, IRC
RLR20C1580%&	158	1/2	F	S	P, R	DAL, IRC
RLR20C1600%&	160	1/2	G	S	P, R	DAL, IRC
RLR20C1620%&	162	1/2	F	S	P, R	DAL, IRC
RLR20C1650%&	165	1/2	F	S	P, R	DAL, IRC
RLR20C1690%&	169	1/2	F	S	P, R	DAL, IRC
RLR20C1740%&	174	1/2	F	S	P, R	DAL, IRC
RLR20C1780%&	178	1/2	F	S	P, R	DAL, IRC
RLR20C1800%&	180	1/2	G	S	P, R	DAL, IRC
	Resistance	Power	Resistance	Level 1	Level 2	
Part Number	Value (Ohms)	Rating (W)	Tolerance (%)	(FRL)(&)	(FRL)(&)	Manufacturer
RLR20C1820%&	182	1/2	F	S	P, R	DAL, IRC
RLR20C1870%&	187	1/2	F	S	P, R	DAL, IRC
RLR20C1910%&	191	1/2	F	S	P, R	DAL, IRC
RLR20C1960%&	196	1/2	F	S	P, R	DAL, IRC
RLR20C2000%&	200	1/2	F, G	S	P, R	DAL, IRC
RLR20C2050%&	205	1/2	F	S	P, R	DAL, IRC
RLR20C2100%&	210	1/2	F	S	P, R	DAL, IRC
RLR20C2150%&	215	1/2	F	S	P, R	DAL, IRC
RLR20C2200%&	220	1/2	G	S	P, R	DAL, IRC
RLR20C2210%&	221	1/2	F	S	P, R	DAL, IRC
RLR20C2260%&	226	1/2	F	S	P, R	DAL, IRC
RLR20C2320%&	232	1/2	F	S	P, R	DAL, IRC
RLR20C2370%&	237	1/2	F	S	P, R	DAL, IRC
RLR20C2400%&	240	1/2	G	S	P, R	DAL, IRC
	Resistance	Power	Resistance	Level 1	Level 2	
Part Number	Value (Ohms)	Rating (W)	Tolerance (%)	(FRL)(&)	(FRL)(&)	Manufacturer
RLR20C2430%&	243	1/2	F	S	P, R	DAL, IRC
RLR20C2490%&	249	1/2	F	S	P, R	DAL, IRC
RLR20C2550%&	255	1/2	F	S	P, R	DAL, IRC
RLR20C2610%&	261	1/2	F	S	P, R	DAL, IRC

RLR20C2670%&	267	1/2	F	S	P, R	DAL, IRC
RLR20C2700%&	270	1/2	G	S	P, R	DAL, IRC
RLR20C2740%&	274	1/2	F	S	P, R	DAL, IRC
RLR20C2800%&	280	1/2	F	S	P, R	DAL, IRC
RLR20C2870%&	287	1/2	F	S	P, R	DAL, IRC
RLR20C2940%&	294	1/2	F	S	P, R	DAL, IRC
RLR20C3000%&	300	1/2	G	S	P, R	DAL, IRC
RLR20C3010%&	301	1/2	F	S	P, R	DAL, IRC
	Resistance	Power	Resistance	Level 1	Level 2	
Part Number	Value (Ohms)	Rating (W)	Tolerance (%)	(FRL)(&)	(FRL)(&)	Manufacturer
RLR20C3090%&	309	1/2	F	S	P, R	DAL, IRC
RLR20C3160%&	316	1/2	F	S	P, R	DAL, IRC
RLR20C3240%&	324	1/2	F	S	P, R	DAL, IRC
RLR20C3300%&	330	1/2	G	S	P, R	DAL, IRC
RLR20C3320%&	332	1/2	F	S	P, R	DAL, IRC
RLR20C3400%&	340	1/2	F	S	P, R	DAL, IRC
RLR20C3480%&	348	1/2	F	S	P, R	DAL, IRC
RLR20C3570%&	357	1/2	F	S	P, R	DAL, IRC
RLR20C3600%&	360	1/2	G	S	P, R	DAL, IRC
RLR20C3650%&	365	1/2	F	S	P, R	DAL, IRC
RLR20C3740%&	374	1/2	F	S	P, R	DAL, IRC
RLR20C3830%&	383	1/2	F	S	P, R	DAL, IRC
RLR20C3900%&	390	1/2	G	S	P, R	DAL, IRC
RLR20C3920%&	392	1/2	F	S	P, R	DAL, IRC
	Resistance	Power	Resistance	Level 1	Level 2	
Part Number	Value (Ohms)	Rating (W)	Tolerance (%)	(FRL)(&)	(FRL)(&)	Manufacturer
RLR20C4020%&	402	1/2	F	S	P, R	DAL, IRC
RLR20C4120%&	412	1/2	F	S	P, R	DAL, IRC
RLR20C4220%&	422	1/2	F	S	P, R	DAL, IRC
RLR20C4300%&	430	1/2	G	S	P, R	DAL, IRC
RLR20C4320%&	432	1/2	F	S	P, R	DAL, IRC
RLR20C4420%&	442	1/2	F	S	P, R	DAL, IRC
RLR20C4530%&	453	1/2	F	S	P, R	DAL, IRC
RLR20C4640%&	464	1/2	F	S	P, R	DAL, IRC
RLR20C4700%&	470	1/2	G	S	P, R	DAL, IRC
RLR20C4750%&	475	1/2	F	S	P, R	DAL, IRC
RLR20C4870%&	487	1/2	F	S	P, R	DAL, IRC
RLR20C4990%&	499	1/2	F	S	P, R	DAL, IRC
RLR20C5100%&	510	1/2	G	S	P, R	DAL, IRC
RLR20C5110%&	511	1/2	F	S	P, R	DAL, IRC
	Resistance	Power	Resistance	Level 1	Level 2	
Part Number	Value (Ohms)	Rating (W)	Tolerance (%)	(FRL)(&)	(FRL)(&)	Manufacturer
RLR20C5230%&	523	1/2	F	S	P, R	DAL, IRC
RLR20C5360%&	536	1/2	F	S	P, R	DAL, IRC
RLR20C5490%&	549	1/2	F	S	P, R	DAL, IRC
RLR20C5600%&	560	1/2	G	S	P, R	DAL, IRC
RLR20C5620%&	562	1/2	F	S	P, R	DAL, IRC

RLR20C5760%&	576	1/2	F	S	P, R	DAL, IRC
RLR20C5900%&	590	1/2	F	S	P, R	DAL, IRC
RLR20C6040%&	604	1/2	F	S	P, R	DAL, IRC
RLR20C6190%&	619	1/2	F	S	P, R	DAL, IRC
RLR20C6200%&	620	1/2	G	S	P, R	DAL, IRC
RLR20C6340%&	634	1/2	F	S	P, R	DAL, IRC
RLR20C6490%&	649	1/2	F	S	P, R	DAL, IRC
RLR20C6650%&	665	1/2	F	S	P, R	DAL, IRC
RLR20C6800%&	680	1/2	G	S	P, R	DAL, IRC
	Resistance	Power	Resistance	Level 1	Level 2	
Part Number	Value (Ohms)	Rating (W)	Tolerance (%)	(FRL)(&)	(FRL)(&)	Manufacturer
RLR20C6810%&	681	1/2	F	S	P, R	DAL, IRC
RLR20C6980%&	698	1/2	F	S	P, R	DAL, IRC
RLR20C7150%&	715	1/2	F	S	P, R	DAL, IRC
RLR20C7320%&	732	1/2	F	S	P, R	DAL, IRC
RLR20C7500%&	750	1/2	F	S	P, R	DAL, IRC
RLR20C7680%&	768	1/2	F	S	P, R	DAL, IRC
RLR20C7870%&	787	1/2	F	S	P, R	DAL, IRC
RLR20C8060%&	806	1/2	F	S	P, R	DAL, IRC
RLR20C8200%&	820	1/2	G	S	P, R	DAL, IRC
RLR20C8250%&	825	1/2	F	S	P, R	DAL, IRC
RLR20C8450%&	845	1/2	F	S	P, R	DAL, IRC
RLR20C8670%&	867	1/2	F	S	P, R	DAL, IRC
RLR20C8870%&	887	1/2	F	S	P, R	DAL, IRC
RLR20C9090%&	909	1/2	F	S	P, R	DAL, IRC
	Resistance	Power	Resistance	Level 1	Level 2	
Part Number	Value (Ohms)	Rating (W)	Tolerance (%)	(FRL)(&)	(FRL)(&)	Manufacturer
RLR20C9100%&	910	1/2	G	S	P, R	DAL, IRC
RLR20C9310%&	931	1/2	F	S	P, R	DAL, IRC
RLR20C9530%&	953	1/2	F	S	P, R	DAL, IRC
RLR20C9760%&	976	1/2	F	S	P, R	DAL, IRC

RLR20 Film Resistors: 1,000 Ohms through 9,760 Ohms

	Resistance	Power	Resistance	Level 1	Level 2	
Part Number	Value (Ohms)	Rating (W)	Tolerance (%)	(FRL)(&)	(FRL)(&)	Manufacturer
RLR20C1001%&	1,000	1/2	F, G	S	P, R	DAL, IRC
RLR20C1021%&	1,020	1/2	F	S	P, R	DAL, IRC
RLR20C1051%&	1,050	1/2	F	S	P, R	DAL, IRC
RLR20C1071%&	1,070	1/2	F	S	P, R	DAL, IRC
RLR20C1101%&	1,100	1/2	F, G	S	P, R	DAL, IRC
RLR20C1131%&	1,130	1/2	F	S	P, R	DAL, IRC
RLR20C1151%&	1,150	1/2	F	S	P, R	DAL, IRC
RLR20C1181%&	1,180	1/2	F	S	P, R	DAL, IRC
RLR20C1201%&	1,200	1/2	G	S	P, R	DAL, IRC

RLR20C1211%&	1,210	1/2	F	S	P, R	DAL, IRC
RLR20C1241%&	1,240	1/2	F	S	P, R	DAL, IRC
RLR20C1271%&	1,270	1/2	F	S	P, R	DAL, IRC
RLR20C1301%&	1,300	1/2	F, G	S	P, R	DAL, IRC
RLR20C1331%&	1,330	1/2	F	S	P, R	DAL, IRC
	Resistance	Power	Resistance	Level 1	Level 2	
Part Number	Value (Ohms)	Rating (W)	Tolerance (%)	(FRL)(&)	(FRL)(&)	Manufacturer
RLR20C1371%&	1,370	1/2	F	S	P, R	DAL, IRC
RLR20C1401%&	1,400	1/2	F	S	P, R	DAL, IRC
RLR20C1431%&	1,430	1/2	F	S	P, R	DAL, IRC
RLR20C1471%&	1,470	1/2	F	S	P, R	DAL, IRC
RLR20C1501%&	1,500	1/2	F, G	S	P, R	DAL, IRC
RLR20C1541%&	1,540	1/2	F	S	P, R	DAL, IRC
RLR20C1581%&	1,580	1/2	F	S	P, R	DAL, IRC
RLR20C1601%&	1,600	1/2	G	S	P, R	DAL, IRC
RLR20C1621%&	1,620	1/2	F	S	P, R	DAL, IRC
RLR20C1651%&	1,650	1/2	F	S	P, R	DAL, IRC
RLR20C1691%&	1,690	1/2	F	S	P, R	DAL, IRC
RLR20C1741%&	1,740	1/2	F	S	P, R	DAL, IRC
RLR20C1781%&	1,780	1/2	F	S	P, R	DAL, IRC
RLR20C1801%&	1,800	1/2	G	S	P, R	DAL, IRC
	Resistance	Power	Resistance	Level 1	Level 2	
Part Number	Value (Ohms)	Rating (W)	Tolerance (%)	(FRL)(&)	(FRL)(&)	Manufacturer
RLR20C1821%&	1,820	1/2	F	S	P, R	DAL, IRC
RLR20C1871%&	1,870	1/2	F	S	P, R	DAL, IRC
RLR20C1911%&	1,910	1/2	F	S	P, R	DAL, IRC
RLR20C1961%&	1,960	1/2	F	S	P, R	DAL, IRC
RLR20C2001%&	2,000	1/2	F, G	S	P, R	DAL, IRC
RLR20C2051%&	2,050	1/2	F	S	P, R	DAL, IRC
RLR20C2101%&	2,100	1/2	F	S	P, R	DAL, IRC
RLR20C2151%&	2,150	1/2	F	S	P, R	DAL, IRC
RLR20C2201%&	2,200	1/2	G	S	P, R	DAL, IRC
RLR20C2211%&	2,210	1/2	F	S	P, R	DAL, IRC
RLR20C2261%&	2,260	1/2	F	S	P, R	DAL, IRC
RLR20C2321%&	2,320	1/2	F	S	P, R	DAL, IRC
RLR20C2371%&	2,370	1/2	F	S	P, R	DAL, IRC
RLR20C2401%&	2,400	1/2	G	S	P, R	DAL, IRC
	Resistance	Power	Resistance	Level 1	Level 2	
Part Number	Value (Ohms)	Rating (W)	Tolerance (%)	(FRL)(&)	(FRL)(&)	Manufacturer
RLR20C2431%&	2,430	1/2	F	S	P, R	DAL, IRC
RLR20C2491%&	2,490	1/2	F	S	P, R	DAL, IRC
RLR20C2551%&	2,550	1/2	F	S	P, R	DAL, IRC
RLR20C2611%&	2,610	1/2	F	S	P, R	DAL, IRC
RLR20C2671%&	2,670	1/2	F	S	P, R	DAL, IRC
RLR20C2701%&	2,700	1/2	G	S	P, R	DAL, IRC
RLR20C2741%&	2,740	1/2	F	S	P, R	DAL, IRC
RLR20C2801%&	2,800	1/2	F	S	P, R	DAL, IRC

RLR20C2871%&	2,870	1/2	F	S	P, R	DAL, IRC
RLR20C2941%&	2,940	1/2	F	S	P, R	DAL, IRC
RLR20C3001%&	3,000	1/2	G	S	P, R	DAL, IRC
RLR20C3011%&	3,010	1/2	F	S	P, R	DAL, IRC
	Resistance	Power	Resistance	Level 1	Level 2	
Part Number	Value (Ohms)	Rating (W)	Tolerance (%)	(FRL)(&)	(FRL)(&)	Manufacturer
RLR20C3091%&	3,090	1/2	F	S	P, R	DAL, IRC
RLR20C3161%&	3,160	1/2	F	S	P, R	DAL, IRC
RLR20C3241%&	3,240	1/2	F	S	P, R	DAL, IRC
RLR20C3301%&	3,300	1/2	G	S	P, R	DAL, IRC
RLR20C3321%&	3,320	1/2	F	S	P, R	DAL, IRC
RLR20C3401%&	3,400	1/2	F	S	P, R	DAL, IRC
RLR20C3481%&	3,480	1/2	F	S	P, R	DAL, IRC
RLR20C3571%&	3,570	1/2	F	S	P, R	DAL, IRC
RLR20C3601%&	3,600	1/2	G	S	P, R	DAL, IRC
RLR20C3651%&	3,650	1/2	F	S	P, R	DAL, IRC
RLR20C3741%&	3,740	1/2	F	S	P, R	DAL, IRC
RLR20C3831%&	3,830	1/2	F	S	P, R	DAL, IRC
RLR20C3901%&	3,900	1/2	G	S	P, R	DAL, IRC
RLR20C3921%&	3,920	1/2	F	S	P, R	DAL, IRC
	Resistance	Power	Resistance	Level 1	Level 2	
Part Number	Value (Ohms)	Rating (W)	Tolerance (%)	(FRL)(&)	(FRL)(&)	Manufacturer
RLR20C4021%&	4,020	1/2	F	S	P, R	DAL, IRC
RLR20C4121%&	4,120	1/2	F	S	P, R	DAL, IRC
RLR20C4221%&	4,220	1/2	F	S	P, R	DAL, IRC
RLR20C4301%&	4,300	1/2	G	S	P, R	DAL, IRC
RLR20C4321%&	4,320	1/2	F	S	P, R	DAL, IRC
RLR20C4421%&	4,420	1/2	F	S	P, R	DAL, IRC
RLR20C4531%&	4,530	1/2	F	S	P, R	DAL, IRC
RLR20C4641%&	4,640	1/2	F	S	P, R	DAL, IRC
RLR20C4701%&	4,700	1/2	G	S	P, R	DAL, IRC
RLR20C4751%&	4,750	1/2	F	S	P, R	DAL, IRC
RLR20C4871%&	4,870	1/2	F	S	P, R	DAL, IRC
RLR20C4991%&	4,990	1/2	F	S	P, R	DAL, IRC
RLR20C5101%&	5,100	1/2	G	S	P, R	DAL, IRC
RLR20C5111%&	5,110	1/2	F	S	P, R	DAL, IRC
	Resistance	Power	Resistance	Level 1	Level 2	
Part Number	Value (Ohms)	Rating (W)	Tolerance (%)	(FRL)(&)	(FRL)(&)	Manufacturer
RLR20C5231%&	5,230	1/2	F	S	P, R	DAL, IRC
RLR20C5361%&	5,360	1/2	F	S	P, R	DAL, IRC
RLR20C5491%&	5,490	1/2	F	S	P, R	DAL, IRC
RLR20C5601%&	5,600	1/2	G	S	P, R	DAL, IRC
RLR20C5621%&	5,620	1/2	F	S	P, R	DAL, IRC
RLR20C5761%&	5,760	1/2	F	S	P, R	DAL, IRC
RLR20C5901%&	5,900	1/2	F	S	P, R	DAL, IRC
RLR20C6041%&	6,040	1/2	F	S	P, R	DAL, IRC
RLR20C6191%&	6,190	1/2	F	S	P, R	DAL, IRC

RLR20C6201%&	6,200	1/2	G	S	P, R	DAL, IRC
RLR20C6341%&	6,340	1/2	F	S	P, R	DAL, IRC
RLR20C6491%&	6,490	1/2	F	S	P, R	DAL, IRC
RLR20C6651%&	6,650	1/2	F	S	P, R	DAL, IRC
RLR20C6801%&	6,800	1/2	G	S	P, R	DAL, IRC
	Resistance	Power	Resistance	Level 1	Level 2	
Part Number	Value (Ohms)	Rating (W)	Tolerance (%)	(FRL)(&)	(FRL)(&)	Manufacturer
RLR20C6811%&	6,810	1/2	F	S	P, R	DAL, IRC
RLR20C6981%&	6,980	1/2	F	S	P, R	DAL, IRC
RLR20C7151%&	7,150	1/2	F	S	P, R	DAL, IRC
RLR20C7321%&	7,320	1/2	F	S	P, R	DAL, IRC
RLR20C7501%&	7,500	1/2	F	S	P, R	DAL, IRC
RLR20C7681%&	7,680	1/2	F	S	P, R	DAL, IRC
RLR20C7871%&	7,870	1/2	F	S	P, R	DAL, IRC
RLR20C8061%&	8,060	1/2	F	S	P, R	DAL, IRC
RLR20C8201%&	8,200	1/2	G	S	P, R	DAL, IRC
RLR20C8251%&	8,250	1/2	F	S	P, R	DAL, IRC
RLR20C8451%&	8,450	1/2	F	S	P, R	DAL, IRC
RLR20C8671%&	8,670	1/2	F	S	P, R	DAL, IRC
RLR20C8871%&	8,870	1/2	F	S	P, R	DAL, IRC
RLR20C9091%&	9,090	1/2	F	S	P, R	DAL, IRC
	Resistance	Power	Resistance	Level 1	Level 2	
Part Number	Value (Ohms)	Rating (W)	Tolerance (%)	(FRL)(&)	(FRL)(&)	Manufacturer
RLR20C9101%&	9,100	1/2	G	S	P, R	DAL, IRC
RLR20C9311%&	9,310	1/2	F	S	P, R	DAL, IRC
RLR20C9531%&	9,530	1/2	F	S	P, R	DAL, IRC
RLR20C9761%&	9,760	1/2	F	S	P, R	DAL, IRC

RLR20 Film Resistors: 10,000 Ohms through 97,600 Ohms

	Resistance	Power	Resistance	Level 1	Level 2	
Part Number	Value (Ohms)	Rating (W)	Tolerance (%)	(FRL)(&)	(FRL)(&)	Manufacturer
RLR20C1002%&	10,000	1/2	F, G	S	P, R	DAL, IRC
RLR20C1022%&	10,200	1/2	F	S	P, R	DAL, IRC
RLR20C1052%&	10,500	1/2	F	S	P, R	DAL, IRC
RLR20C1072%&	10,700	1/2	F	S	P, R	DAL, IRC
RLR20C1102%&	11,000	1/2	F, G	S	P, R	DAL, IRC
RLR20C1132%&	11,300	1/2	F	S	P, R	DAL, IRC
RLR20C1152%&	11,500	1/2	F	S	P, R	DAL, IRC
RLR20C1182%&	11,800	1/2	F	S	P, R	DAL, IRC
RLR20C1202%&	12,000	1/2	G	S	P, R	DAL, IRC
RLR20C1212%&	12,100	1/2	F	S	P, R	DAL, IRC
RLR20C1242%&	12,400	1/2	F	S	P, R	DAL, IRC
RLR20C1272%&	12,700	1/2	F	S	P, R	DAL, IRC
RLR20C1302%&	13,000	1/2	F, G	S	P, R	DAL, IRC

RLR20C1332%&	13,300	1/2	F	S	P, R	DAL, IRC
	Resistance	Power	Resistance	Level 1	Level 2	
Part Number	Value (Ohms)	Rating (W)	Tolerance (%)	(FRL)(&)	(FRL)(&)	Manufacturer
RLR20C1372%&	13,700	1/2	F	S	P, R	DAL, IRC
RLR20C1402%&	14,000	1/2	F	S	P, R	DAL, IRC
RLR20C1432%&	14,300	1/2	F	S	P, R	DAL, IRC
RLR20C1472%&	14,700	1/2	F	S	P, R	DAL, IRC
RLR20C1502%&	15,000	1/2	F, G	S	P, R	DAL, IRC
RLR20C1542%&	15,400	1/2	F	S	P, R	DAL, IRC
RLR20C1582%&	15,800	1/2	F	S	P, R	DAL, IRC
RLR20C1602%&	16,000	1/2	G	S	P, R	DAL, IRC
RLR20C1622%&	16,200	1/2	F	S	P, R	DAL, IRC
RLR20C1652%&	16,500	1/2	F	S	P, R	DAL, IRC
RLR20C1692%&	16,900	1/2	F	S	P, R	DAL, IRC
RLR20C1742%&	17,400	1/2	F	S	P, R	DAL, IRC
RLR20C1782%&	17,800	1/2	F	S	P, R	DAL, IRC
RLR20C1802%&	18,000	1/2	G	S	P, R	DAL, IRC
	Resistance	Power	Resistance	Level 1	Level 2	
Part Number	Value (Ohms)	Rating (W)	Tolerance (%)	(FRL)(&)	(FRL)(&)	Manufacturer
RLR20C1822%&	18,200	1/2	F	S	P, R	DAL, IRC
RLR20C1872%&	18,700	1/2	F	S	P, R	DAL, IRC
RLR20C1912%&	19,100	1/2	F	S	P, R	DAL, IRC
RLR20C1962%&	19,600	1/2	F	S	P, R	DAL, IRC
RLR20C2002%&	20,000	1/2	F, G	S	P, R	DAL, IRC
RLR20C2052%&	20,500	1/2	F	S	P, R	DAL, IRC
RLR20C2102%&	21,000	1/2	F	S	P, R	DAL, IRC
RLR20C2152%&	21,500	1/2	F	S	P, R	DAL, IRC
RLR20C2202%&	22,000	1/2	G	S	P, R	DAL, IRC
RLR20C2212%&	22,100	1/2	F	S	P, R	DAL, IRC
RLR20C2262%&	22,600	1/2	F	S	P, R	DAL, IRC
RLR20C2322%&	23,200	1/2	F	S	P, R	DAL, IRC
RLR20C2372%&	23,700	1/2	F	S	P, R	DAL, IRC
RLR20C2402%&	24,000	1/2	G	S	P, R	DAL, IRC
	Resistance	Power	Resistance	Level 1	Level 2	
Part Number	Value (Ohms)	Rating (W)	Tolerance (%)	(FRL)(&)	(FRL)(&)	Manufacturer
RLR20C2432%&	24,300	1/2	F	S	P, R	DAL, IRC
RLR20C2492%&	24,900	1/2	F	S	P, R	DAL, IRC
RLR20C2552%&	25,500	1/2	F	S	P, R	DAL, IRC
RLR20C2612%&	26,100	1/2	F	S	P, R	DAL, IRC
RLR20C2672%&	26,700	1/2	F	S	P, R	DAL, IRC
RLR20C2702%&	27,000	1/2	G	S	P, R	DAL, IRC
RLR20C2742%&	27,400	1/2	F	S	P, R	DAL, IRC
RLR20C2802%&	28,000	1/2	F	S	P, R	DAL, IRC
RLR20C2872%&	28,700	1/2	F	S	P, R	DAL, IRC
RLR20C2942%&	29,400	1/2	F	S	P, R	DAL, IRC
RLR20C3002%&	30,000	1/2	G	S	P, R	DAL, IRC
RLR20C3012%&	30,100	1/2	F	S	P, R	DAL, IRC

	Resistance	Power	Resistance	Level 1	Level 2	
Part Number	Value (Ohms)	Rating (W)	Tolerance (%)	(FRL)(&)	(FRL)(&)	Manufacturer
RLR20C3092%&	30,900	1/2	F	S	P, R	DAL, IRC
RLR20C3162%&	31,600	1/2	F	S	P, R	DAL, IRC
RLR20C3242%&	32,400	1/2	F	S	P, R	DAL, IRC
RLR20C3302%&	33,000	1/2	G	S	P, R	DAL, IRC
RLR20C3322%&	33,200	1/2	F	S	P, R	DAL, IRC
RLR20C3402%&	34,000	1/2	F	S	P, R	DAL, IRC
RLR20C3482%&	34,800	1/2	F	S	P, R	DAL, IRC
RLR20C3572%&	35,700	1/2	F	S	P, R	DAL, IRC
RLR20C3602%&	36,000	1/2	G	S	P, R	DAL, IRC
RLR20C3652%&	36,500	1/2	F	S	P, R	DAL, IRC
RLR20C3742%&	37,400	1/2	F	S	P, R	DAL, IRC
RLR20C3832%&	38,300	1/2	F	S	P, R	DAL, IRC
RLR20C3902%&	39,000	1/2	G	S	P, R	DAL, IRC
RLR20C3922%&	39,200	1/2	F	S	P, R	DAL, IRC
	Resistance	Power	Resistance	Level 1	Level 2	
Part Number	Value (Ohms)	Rating (W)	Tolerance (%)	(FRL)(&)	(FRL)(&)	Manufacturer
RLR20C4022%&	40,200	1/2	F	S	P, R	DAL, IRC
RLR20C4122%&	41,200	1/2	F	S	P, R	DAL, IRC
RLR20C4222%&	42,200	1/2	F	S	P, R	DAL, IRC
RLR20C4302%&	43,000	1/2	G	S	P, R	DAL, IRC
RLR20C4322%&	43,200	1/2	F	S	P, R	DAL, IRC
RLR20C4422%&	44,200	1/2	F	S	P, R	DAL, IRC
RLR20C4532%&	45,300	1/2	F	S	P, R	DAL, IRC
RLR20C4642%&	46,400	1/2	F	S	P, R	DAL, IRC
RLR20C4702%&	47,000	1/2	G	S	P, R	DAL, IRC
RLR20C4752%&	47,500	1/2	F	S	P, R	DAL, IRC
RLR20C4872%&	48,700	1/2	F	S	P, R	DAL, IRC
RLR20C4992%&	49,900	1/2	F	S	P, R	DAL, IRC
RLR20C5102%&	51,000	1/2	G	S	P, R	DAL, IRC
RLR20C5112%&	51,100	1/2	F	S	P, R	DAL, IRC
	Resistance	Power	Resistance	Level 1	Level 2	
Part Number	Value (Ohms)	Rating (W)	Tolerance (%)	(FRL)(&)	(FRL)(&)	Manufacturer
RLR20C5232%&	52,300	1/2	F	S	P, R	DAL, IRC
RLR20C5362%&	53,600	1/2	F	S	P, R	DAL, IRC
RLR20C5492%&	54,900	1/2	F	S	P, R	DAL, IRC
RLR20C5602%&	56,000	1/2	G	S	P, R	DAL, IRC
RLR20C5622%&	56,200	1/2	F	S	P, R	DAL, IRC
RLR20C5762%&	57,600	1/2	F	S	P, R	DAL, IRC
RLR20C5902%&	59,000	1/2	F	S	P, R	DAL, IRC
RLR20C6042%&	60,400	1/2	F	S	P, R	DAL, IRC
RLR20C6192%&	61,900	1/2	F	S	P, R	DAL, IRC
RLR20C6202%&	62,000	1/2	G	S	P, R	DAL, IRC
RLR20C6342%&	63,400	1/2	F	S	P, R	DAL, IRC
RLR20C6492%&	64,900	1/2	F	S	P, R	DAL, IRC
RLR20C6652%&	66,500	1/2	F	S	P, R	DAL, IRC

RLR20C6802%&	68,000	1/2	G	S	P, R	DAL, IRC
	Resistance	Power	Resistance	Level 1	Level 2	
Part Number	Value (Ohms)	Rating (W)	Tolerance (%)	(FRL)(&)	(FRL)(&)	Manufacturer
RLR20C6812%&	68,100	1/2	F	S	P, R	DAL, IRC
RLR20C6982%&	69,800	1/2	F	S	P, R	DAL, IRC
RLR20C7152%&	71,500	1/2	F	S	P, R	DAL, IRC
RLR20C7322%&	73,200	1/2	F	S	P, R	DAL, IRC
RLR20C7502%&	75,000	1/2	F	S	P, R	DAL, IRC
RLR20C7682%&	76,800	1/2	F	S	P, R	DAL, IRC
RLR20C7872%&	78,700	1/2	F	S	P, R	DAL, IRC
RLR20C8062%&	80,600	1/2	F	S	P, R	DAL, IRC
RLR20C8202%&	82,000	1/2	G	S	P, R	DAL, IRC
RLR20C8252%&	82,500	1/2	F	S	P, R	DAL, IRC
RLR20C8452%&	84,500	1/2	F	S	P, R	DAL, IRC
RLR20C8672%&	86,700	1/2	F	S	P, R	DAL, IRC
RLR20C8872%&	88,700	1/2	F	S	P, R	DAL, IRC
RLR20C9092%&	90,900	1/2	F	S	P, R	DAL, IRC
	Resistance	Power	Resistance	Level 1	Level 2	
Part Number	Value (Ohms)	Rating (W)	Tolerance (%)	(FRL)(&)	(FRL)(&)	Manufacturer
RLR20C9102%&	91,000	1/2	G	S	P, R	DAL, IRC
RLR20C9312%&	93,100	1/2	F	S	P, R	DAL, IRC
RLR20C9532%&	95,300	1/2	F	S	P, R	DAL, IRC
RLR20C9762%&	97,600	1/2	F	S	P, R	DAL, IRC

RLR20 Film Resistors: 100,000 Ohms through 976,000 Ohms

	Resistance	Power	Resistance	Level 1	Level 2	
Part Number	Value (Ohms)	Rating (W)	Tolerance (%)	(FRL)(&)	(FRL)(&)	Manufacturer
RLR20C1003%&	100,000	1/2	F, G	S	P, R	DAL, IRC
RLR20C1023%&	102,000	1/2	F	S	P, R	DAL, IRC
RLR20C1053%&	105,000	1/2	F	S	P, R	DAL, IRC
RLR20C1073%&	107,000	1/2	F	S	P, R	DAL, IRC
RLR20C1103%&	110,000	1/2	F, G	S	P, R	DAL, IRC
RLR20C1133%&	113,000	1/2	F	S	P, R	DAL, IRC
RLR20C1153%&	115,000	1/2	F	S	P, R	DAL, IRC
RLR20C1183%&	118,000	1/2	F	S	P, R	DAL, IRC
RLR20C1203%&	120,000	1/2	G	S	P, R	DAL, IRC
RLR20C1213%&	121,000	1/2	F	S	P, R	DAL, IRC
RLR20C1243%&	124,000	1/2	F	S	P, R	DAL, IRC
RLR20C1273%&	127,000	1/2	F	S	P, R	DAL, IRC
RLR20C1303%&	130,000	1/2	F, G	S	P, R	DAL, IRC
RLR20C1333%&	133,000	1/2	F	S	P, R	DAL, IRC
	Resistance	Power	Resistance	Level 1	Level 2	
Part Number	Value (Ohms)	Rating (W)	Tolerance (%)	(FRL)(&)	(FRL)(&)	Manufacturer
RLR20C1373%&	137,000	1/2	F	S	P, R	DAL, IRC

RLR20C1403%&	140,000	1/2	F	S	P, R	DAL, IRC
RLR20C1433%&	143,000	1/2	F	S	P, R	DAL, IRC
RLR20C1473%&	147,000	1/2	F	S	P, R	DAL, IRC
RLR20C1503%&	150,000	1/2	F, G	S	P, R	DAL, IRC
RLR20C1543%&	154,000	1/2	F	S	P, R	DAL, IRC
RLR20C1583%&	158,000	1/2	F	S	P, R	DAL, IRC
RLR20C1603%&	160,000	1/2	G	S	P, R	DAL, IRC
RLR20C1623%&	162,000	1/2	F	S	P, R	DAL, IRC
RLR20C1653%&	165,000	1/2	F	S	P, R	DAL, IRC
RLR20C1693%&	169,000	1/2	F	S	P, R	DAL, IRC
RLR20C1743%&	174,000	1/2	F	S	P, R	DAL, IRC
RLR20C1783%&	178,000	1/2	F	S	P, R	DAL, IRC
RLR20C1803%&	180,000	1/2	G	S	P, R	DAL, IRC
	Resistance	Power	Resistance	Level 1	Level 2	
Part Number	Value (Ohms)	Rating (W)	Tolerance (%)	(FRL)(&)	(FRL)(&)	Manufacturer
RLR20C1823%&	182,000	1/2	F	S	P, R	DAL, IRC
RLR20C1873%&	187,000	1/2	F	S	P, R	DAL, IRC
RLR20C1913%&	191,000	1/2	F	S	P, R	DAL, IRC
RLR20C1963%&	196,000	1/2	F	S	P, R	DAL, IRC
RLR20C2003%&	200,000	1/2	F, G	S	P, R	DAL, IRC
RLR20C2053%&	205,000	1/2	F	S	P, R	DAL, IRC
RLR20C2103%&	210,000	1/2	F	S	P, R	DAL, IRC
RLR20C2153%&	215,000	1/2	F	S	P, R	DAL, IRC
RLR20C2203%&	220,000	1/2	G	S	P, R	DAL, IRC
RLR20C2213%&	221,000	1/2	F	S	P, R	DAL, IRC
RLR20C2263%&	226,000	1/2	F	S	P, R	DAL, IRC
RLR20C2323%&	232,000	1/2	F	S	P, R	DAL, IRC
RLR20C2373%&	237,000	1/2	F	S	P, R	DAL, IRC
RLR20C2403%&	240,000	1/2	G	S	P, R	DAL, IRC
	Resistance	Power	Resistance	Level 1	Level 2	
Part Number	Value (Ohms)	Rating (W)	Tolerance (%)	(FRL)(&)	(FRL)(&)	Manufacturer
RLR20C2433%&	243,000	1/2	F	S	P, R	DAL, IRC
RLR20C2493%&	249,000	1/2	F	S	P, R	DAL, IRC
RLR20C2553%&	255,000	1/2	F	S	P, R	DAL, IRC
RLR20C2613%&	261,000	1/2	F	S	P, R	DAL, IRC
RLR20C2673%&	267,000	1/2	F	S	P, R	DAL, IRC
RLR20C2703%&	270,000	1/2	G	S	P, R	DAL, IRC
RLR20C2743%&	274,000	1/2	F	S	P, R	DAL, IRC
RLR20C2803%&	280,000	1/2	F	S	P, R	DAL, IRC
RLR20C2873%&	287,000	1/2	F	S	P, R	DAL, IRC
RLR20C2943%&	294,000	1/2	F	S	P, R	DAL, IRC
RLR20C3003%&	300,000	1/2	G	S	P, R	DAL, IRC
RLR20C3013%&	301,000	1/2	F	S	P, R	DAL, IRC
	Resistance	Power	Resistance	Level 1	Level 2	
Part Number	Value (Ohms)	Rating (W)	Tolerance (%)	(FRL)(&)	(FRL)(&)	Manufacturer
RLR20C3093%&	309,000	1/2	F	S	P, R	DAL, IRC
RLR20C3163%&	316,000	1/2	F	S	P, R	DAL, IRC

RLR20C3243%&	324,000	1/2	F	S	P, R	DAL, IRC
RLR20C3303%&	330,000	1/2	G	S	P, R	DAL, IRC
RLR20C3323%&	332,000	1/2	F	S	P, R	DAL, IRC
RLR20C3403%&	340,000	1/2	F	S	P, R	DAL, IRC
RLR20C3483%&	348,000	1/2	F	S	P, R	DAL, IRC
RLR20C3573%&	357,000	1/2	F	S	P, R	DAL, IRC
RLR20C3603%&	360,000	1/2	G	S	P, R	DAL, IRC
RLR20C3653%&	365,000	1/2	F	S	P, R	DAL, IRC
RLR20C3743%&	374,000	1/2	F	S	P, R	DAL, IRC
RLR20C3833%&	383,000	1/2	F	S	P, R	DAL, IRC
RLR20C3903%&	390,000	1/2	G	S	P, R	DAL, IRC
RLR20C3923%&	392,000	1/2	F	S	P, R	DAL, IRC
	Resistance	Power	Resistance	Level 1	Level 2	
Part Number	Value (Ohms)	Rating (W)	Tolerance (%)	(FRL)(&)	(FRL)(&)	Manufacturer
RLR20C4023%&	402,000	1/2	F	S	P, R	DAL, IRC
RLR20C4123%&	412,000	1/2	F	S	P, R	DAL, IRC
RLR20C4223%&	422,000	1/2	F	S	P, R	DAL, IRC
RLR20C4303%&	430,000	1/2	G	S	P, R	DAL, IRC
RLR20C4323%&	432,000	1/2	F	S	P, R	DAL, IRC
RLR20C4423%&	442,000	1/2	F	S	P, R	DAL, IRC
RLR20C4533%&	453,000	1/2	F	S	P, R	DAL, IRC
RLR20C4643%&	464,000	1/2	F	S	P, R	DAL, IRC
RLR20C4703%&	470,000	1/2	G	S	P, R	DAL, IRC
RLR20C4753%&	475,000	1/2	F	S	P, R	DAL, IRC
RLR20C4873%&	487,000	1/2	F	S	P, R	DAL, IRC
RLR20C4993%&	499,000	1/2	F	S	P, R	DAL, IRC
RLR20C5103%&	510,000	1/2	G	S	P, R	DAL, IRC
RLR20C5113%&	511,000	1/2	F	S	P, R	DAL, IRC
	Resistance	Power	Resistance	Level 1	Level 2	
Part Number	Value (Ohms)	Rating (W)	Tolerance (%)	(FRL)(&)	(FRL)(&)	Manufacturer
RLR20C5233%&	523,000	1/2	F	S	P, R	DAL, IRC
RLR20C5363%&	536,000	1/2	F	S	P, R	DAL, IRC
RLR20C5493%&	549,000	1/2	F	S	P, R	DAL, IRC
RLR20C5603%&	560,000	1/2	G	S	P, R	DAL, IRC
RLR20C5623%&	562,000	1/2	F	S	P, R	DAL, IRC
RLR20C5763%&	576,000	1/2	F	S	P, R	DAL, IRC
RLR20C5903%&	590,000	1/2	F	S	P, R	DAL, IRC
RLR20C6043%&	604,000	1/2	F	S	P, R	DAL, IRC
RLR20C6193%&	619,000	1/2	F	S	P, R	DAL, IRC
RLR20C6203%&	620,000	1/2	G	S	P, R	DAL, IRC
RLR20C6343%&	634,000	1/2	F	S	P, R	DAL, IRC
RLR20C6493%&	649,000	1/2	F	S	P, R	DAL, IRC
RLR20C6653%&	665,000	1/2	F	S	P, R	DAL, IRC
RLR20C6803%&	680,000	1/2	G	S	P, R	DAL, IRC
	Resistance	Power	Resistance	Level 1	Level 2	
Part Number	Value (Ohms)	Rating (W)	Tolerance (%)	(FRL)(&)	(FRL)(&)	Manufacturer
RLR20C6813%&	681,000	1/2	F	S	P, R	DAL, IRC

RLR20C6983%&	698,000	1/2	F	S	P, R	DAL, IRC
RLR20C7153%&	715,000	1/2	F	S	P, R	DAL, IRC
RLR20C7323%&	732,000	1/2	F	S	P, R	DAL, IRC
RLR20C7503%&	750,000	1/2	F	S	P, R	DAL, IRC
RLR20C7683%&	768,000	1/2	F	S	P, R	DAL, IRC
RLR20C7873%&	787,000	1/2	F	S	P, R	DAL, IRC
RLR20C8063%&	806,000	1/2	F	S	P, R	DAL, IRC
RLR20C8203%&	820,000	1/2	G	S	P, R	DAL, IRC
RLR20C8253%&	825,000	1/2	F	S	P, R	DAL, IRC
RLR20C8453%&	845,000	1/2	F	S	P, R	DAL, IRC
RLR20C8673%&	867,000	1/2	F	S	P, R	DAL, IRC
RLR20C8873%&	887,000	1/2	F	S	P, R	DAL, IRC
RLR20C9093%&	909,000	1/2	F	S	P, R	DAL, IRC
	Resistance	Power	Resistance	Level 1	Level 2	
Part Number	Value (Ohms)	Rating (W)	Tolerance (%)	(FRL)(&)	(FRL)(&)	Manufacturer
RLR20C9103%&	910,000	1/2	G	S	P, R	DAL, IRC
RLR20C9313%&	931,000	1/2	F	S	P, R	DAL, IRC
RLR20C9533%&	953,000	1/2	F	S	P, R	DAL, IRC
RLR20C9763%&	976,000	1/2	F	S	P, R	DAL, IRC

RLR20 Film Resistors: 1,000,000 Ohms through 3,010,000 Ohms

	Resistance	Power	Resistance	Level 1	Level 2	
Part Number	Value (Ohms)	Rating (W)	Tolerance (%)	(FRL)(&)	(FRL)(&)	Manufacturer
RLR20C1004%&	1,000,000	1/2	F, G	S	P, R	DAL, IRC
RLR20C1024%&	1,020,000	1/2	F	S	P, R	IRC
RLR20C1054%&	1,050,000	1/2	F	S	P, R	IRC
RLR20C1074%&	1,070,000	1/2	F	S	P, R	IRC
RLR20C1104%&	1,100,000	1/2	F, G	S	P, R	IRC
RLR20C1134%&	1,130,000	1/2	F	S	P, R	IRC
RLR20C1154%&	1,150,000	1/2	F	S	P, R	IRC
RLR20C1184%&	1,180,000	1/2	F	S	P, R	IRC
RLR20C1204%&	1,200,000	1/2	G	S	P, R	IRC
RLR20C1214%&	1,210,000	1/2	F	S	P, R	IRC
RLR20C1244%&	1,240,000	1/2	F	S	P, R	IRC
RLR20C1274%&	1,270,000	1/2	F	S	P, R	IRC
RLR20C1304%&	1,300,000	1/2	F, G	S	P, R	IRC
RLR20C1334%&	1,330,000	1/2	F	S	P, R	IRC
	Resistance	Power	Resistance	Level 1	Level 2	
Part Number	Value (Ohms)	Rating (W)	Tolerance (%)	(FRL)(&)	(FRL)(&)	Manufacturer
RLR20C1374%&	1,370,000	1/2	F	S	P, R	IRC
RLR20C1404%&	1,400,000	1/2	F	S	P, R	IRC
RLR20C1434%&	1,430,000	1/2	F	S	P, R	IRC
RLR20C1474%&	1,470,000	1/2	F	S	P, R	IRC
RLR20C1504%&	1,500,000	1/2	F, G	S	P, R	IRC

RLR20C1544%&	1,540,000	1/2	F	S	P, R	IRC
RLR20C1584%&	1,580,000	1/2	F	S	P, R	IRC
RLR20C1604%&	1,600,000	1/2	G	S	P, R	IRC
RLR20C1624%&	1,620,000	1/2	F	S	P, R	IRC
RLR20C1654%&	1,650,000	1/2	F	S	P, R	IRC
RLR20C1694%&	1,690,000	1/2	F	S	P, R	IRC
RLR20C1744%&	1,740,000	1/2	F	S	P, R	IRC
RLR20C1784%&	1,780,000	1/2	F	S	P, R	IRC
RLR20C1804%&	1,800,000	1/2	G	S	P, R	IRC
	Resistance	Power	Resistance	Level 1	Level 2	
Part Number	Value (Ohms)	Rating (W)	Tolerance (%)	(FRL)(&)	(FRL)(&)	Manufacturer
RLR20C1824%&	1,820,000	1/2	F	S	P, R	IRC
RLR20C1874%&	1,870,000	1/2	F	S	P, R	IRC
RLR20C1914%&	1,910,000	1/2	F	S	P, R	IRC
RLR20C1964%&	1,960,000	1/2	F	S	P, R	IRC
RLR20C2004%&	2,000,000	1/2	F, G	S	P, R	IRC
RLR20C2054%&	2,050,000	1/2	F	S	P, R	IRC
RLR20C2104%&	2,100,000	1/2	F	S	P, R	IRC
RLR20C2154%&	2,150,000	1/2	F	S	P, R	IRC
RLR20C2204%&	2,200,000	1/2	G	S	P, R	IRC
RLR20C2214%&	2,210,000	1/2	F	S	P, R	IRC
RLR20C2264%&	2,260,000	1/2	F	S	P, R	IRC
RLR20C2324%&	2,320,000	1/2	F	S	P, R	IRC
RLR20C2374%&	2,370,000	1/2	F	S	P, R	IRC
RLR20C2404%&	2,400,000	1/2	G	S	P, R	IRC
	Resistance	Power	Resistance	Level 1	Level 2	
Part Number	Value (Ohms)	Rating (W)	Tolerance (%)	(FRL)(&)	(FRL)(&)	Manufacturer
RLR20C2434%&	2,430,000	1/2	F	S	P, R	IRC
RLR20C2494%&	2,490,000	1/2	F	S	P, R	IRC
RLR20C2554%&	2,550,000	1/2	F	S	P, R	IRC
RLR20C2614%&	2,610,000	1/2	F	S	P, R	IRC
RLR20C2674%&	2,670,000	1/2	F	S	P, R	IRC
RLR20C2704%&	2,700,000	1/2	G	S	P, R	IRC
RLR20C2744%&	2,740,000	1/2	F	S	P, R	IRC
RLR20C2804%&	2,800,000	1/2	F	S	P, R	IRC
RLR20C2874%&	2,870,000	1/2	F	S	P, R	IRC
RLR20C2944%&	2,940,000	1/2	F	S	P, R	IRC
RLR20C3004%&	3,000,000	1/2	G	S	P, R	IRC
RLR20C3014%&	3,010,000	1/2	F	S	P, R	IRC

RLR32 Film Resistors

	Resistance	Power	Resistance	Level 1	Level 2	
Part Number	Value (Ohms)	Rating (W)	Tolerance (%)	(FRL)(&)	(FRL)(&)	Manufacturer
RLR32C10R0%&	10.0	1	F, G	S	P, R	DAL

RLR32C10R2%&	10.2	1	F	S	P, R	DAL
RLR32C10R5%&	10.5	1	F	S	P, R	DAL
RLR32C10R7%&	10.7	1	F	S	P, R	DAL
RLR32C11R0%&	11.0	1	F, G	S	P, R	DAL
RLR32C11R3%&	11.3	1	F	S	P, R	DAL
RLR32C11R5%&	11.5	1	F	S	P, R	DAL
RLR32C11R8%&	11.8	1	F	S	P, R	DAL
RLR32C12R0%&	12.0	1	G	S	P, R	DAL
RLR32C12R1%&	12.1	1	F	S	P, R	DAL
RLR32C12R4%&	12.4	1	F	S	P, R	DAL
RLR32C12R7%&	12.7	1	F	S	P, R	DAL
RLR32C13R0%&	13.0	1	F, G	S	P, R	DAL
RLR32C13R3%&	13.3	1	F	S	P, R	DAL
RLR32C13R7%&	13.7	1	F	S	P, R	DAL
RLR32C14R0%&	14.0	1	F	S	P, R	DAL
RLR32C14R3%&	14.3	1	F	S	P, R	DAL
RLR32C14R7%&	14.7	1	F	S	P, R	DAL
RLR32C15R0%&	15.0	1	F, G	S	P, R	DAL
RLR32C15R4%&	15.4	1	F	S	P, R	DAL
RLR32C15R8%&	15.8	1	F	S	P, R	DAL
RLR32C16R0%&	16.0	1	G	S	P, R	DAL
RLR32C16R2%&	16.2	1	F	S	P, R	DAL
RLR32C16R5%&	16.5	1	F	S	P, R	DAL
RLR32C16R9%&	16.9	1	F	S	P, R	DAL
RLR32C17R4%&	17.4	1	F	S	P, R	DAL
RLR32C17R8%&	17.8	1	F	S	P, R	DAL
RLR32C18R0%&	18.0	1	G	S	P, R	DAL
RLR32C18R2%&	18.2	1	F	S	P, R	DAL
RLR32C18R7%&	18.7	1	F	S	P, R	DAL
RLR32C19R1%&	19.1	1	F	S	P, R	DAL
RLR32C19R6%&	19.6	1	F	S	P, R	DAL
RLR32C20R0%&	20.0	1	F, G	S	P, R	DAL
RLR32C20R5%&	20.5	1	F	S	P, R	DAL
RLR32C21R0%&	21.0	1	F	S	P, R	DAL
RLR32C21R5%&	21.5	1	F	S	P, R	DAL
RLR32C22R0%&	22.0	1	G	S	P, R	DAL
RLR32C22R1%&	22.1	1	F	S	P, R	DAL
RLR32C22R6%&	22.6	1	F	S	P, R	DAL
RLR32C23R2%&	23.2	1	F	S	P, R	DAL
RLR32C23R7%&	23.7	1	F	S	P, R	DAL
RLR32C24R0%&	24.0	1	G	S	P, R	DAL
RLR32C24R3%&	24.3	1	F	S	P, R	DAL
RLR32C24R9%&	24.9	1	F	S	P, R	DAL
RLR32C25R5%&	25.5	1	F	S	P, R	DAL
RLR32C26R1%&	26.1	1	F	S	P, R	DAL
RLR32C26R7%&	26.7	1	F	S	P, R	DAL
RLR32C27R0%&	27.0	1	G	S	P, R	DAL

RLR32C27R4%&	27.4	1	F	S	P, R	DAL
RLR32C28R0%&	28.0	1	F	S	P, R	DAL
RLR32C28R7%&	28.7	1	F	S	P, R	DAL
RLR32C29R4%&	29.4	1	F	S	P, R	DAL
RLR32C30R0%&	30.0	1	G	S	P, R	DAL
RLR32C30R1%&	30.1	1	F	S	P, R	DAL
RLR32C30R9%&	30.9	1	F	S	P, R	DAL
RLR32C31R6%&	31.6	1	F	S	P, R	DAL
RLR32C32R4%&	32.4	1	F	S	P, R	DAL
RLR32C33R0%&	33.0	1	G	S	P, R	DAL
RLR32C33R2%&	33.2	1	F	S	P, R	DAL
RLR32C34R0%&	34.0	1	F	S	P, R	DAL
RLR32C34R8%&	34.8	1	F	S	P, R	DAL
RLR32C35R7%&	35.7	1	F	S	P, R	DAL
RLR32C36R0%&	36.0	1	G	S	P, R	DAL
RLR32C36R5%&	36.5	1	F	S	P, R	DAL
RLR32C37R4%&	37.4	1	F	S	P, R	DAL
RLR32C38R3%&	38.3	1	F	S	P, R	DAL
RLR32C39R0%&	39.0	1	G	S	P, R	DAL
RLR32C39R2%&	39.2	1	F	S	P, R	DAL
RLR32C40R2%&	40.2	1	F	S	P, R	DAL
RLR32C41R2%&	41.2	1	F	S	P, R	DAL
RLR32C42R2%&	42.2	1	F	S	P, R	DAL
RLR32C43R0%&	43.0	1	G	S	P, R	DAL
RLR32C43R2%&	43.2	1	F	S	P, R	DAL
RLR32C44R2%&	44.2	1	F	S	P, R	DAL
RLR32C45R3%&	45.3	1	F	S	P, R	DAL
RLR32C46R4%&	46.4	1	F	S	P, R	DAL
RLR32C47R0%&	47.0	1	G	S	P, R	DAL
RLR32C47R5%&	47.5	1	F	S	P, R	DAL
RLR32C48R7%&	48.7	1	F	S	P, R	DAL
RLR32C49R9%&	49.9	1	F	S	P, R	DAL
RLR32C51R0%&	51.0	1	G	S	P, R	DAL
RLR32C51R1%&	51.1	1	F	S	P, R	DAL
RLR32C52R3%&	52.3	1	F	S	P, R	DAL
RLR32C53R6%&	53.6	1	F	S	P, R	DAL
RLR32C54R9%&	54.9	1	F	S	P, R	DAL
RLR32C56R0%&	56.0	1	G	S	P, R	DAL
RLR32C56R2%&	56.2	1	F	S	P, R	DAL
RLR32C57R6%&	57.6	1	F	S	P, R	DAL
RLR32C59R0%&	59.0	1	F	S	P, R	DAL
RLR32C60R4%&	60.4	1	F	S	P, R	DAL
RLR32C61R9%&	61.9	1	F	S	P, R	DAL
RLR32C62R0%&	62.0	1	G	S	P, R	DAL
RLR32C63R4%&	63.4	1	F	S	P, R	DAL
RLR32C64R9%&	64.9	1	F	S	P, R	DAL
RLR32C66R5%&	66.5	1	F	S	P, R	DAL

RLR32C68R0%&	68.0	1	G	S	P, R	DAL
RLR32C68R1%&	68.1	1	F	S	P, R	DAL
RLR32C69R8%&	69.8	1	F	S	P, R	DAL
RLR32C71R5%&	71.5	1	F	S	P, R	DAL
RLR32C73R2%&	73.2	1	F	S	P, R	DAL
RLR32C75R0%&	75.0	1	F	S	P, R	DAL
RLR32C76R8%&	76.8	1	F	S	P, R	DAL
RLR32C78R7%&	78.7	1	F	S	P, R	DAL
RLR32C80R6%&	80.6	1	F	S	P, R	DAL
RLR32C82R0%&	82.0	1	G	S	P, R	DAL
RLR32C82R5%&	82.5	1	F	S	P, R	DAL
RLR32C84R5%&	84.5	1	F	S	P, R	DAL
RLR32C86R7%&	86.7	1	F	S	P, R	DAL
RLR32C88R7%&	88.7	1	F	S	P, R	DAL
RLR32C90R9%&	90.9	1	F	S	P, R	DAL
RLR32C91R0%&	91.0	1	G	S	P, R	DAL
RLR32C93R1%&	93.1	1	F	S	P, R	DAL
RLR32C95R3%&	95.3	1	F	S	P, R	DAL
RLR32C97R6%&	97.6	1	F	S	P, R	DAL
RLR32C1000%&	100	1	F, G	S	P, R	DAL
RLR32C1020%&	102	1	F	S	P, R	DAL
RLR32C1050%&	105	1	F	S	P, R	DAL
RLR32C1070%&	107	1	F	S	P, R	DAL
RLR32C1100%&	110	1	F, G	S	P, R	DAL
RLR32C1130%&	113	1	F	S	P, R	DAL
RLR32C1150%&	115	1	F	S	P, R	DAL
RLR32C1180%&	118	1	F	S	P, R	DAL
RLR32C1200%&	120	1	G	S	P, R	DAL
RLR32C1210%&	121	1	F	S	P, R	DAL
RLR32C1240%&	124	1	F	S	P, R	DAL
RLR32C1270%&	127	1	F	S	P, R	DAL
RLR32C1300%&	130	1	F, G	S	P, R	DAL
RLR32C1330%&	133	1	F	S	P, R	DAL
RLR32C1370%&	137	1	F	S	P, R	DAL
RLR32C1400%&	140	1	F	S	P, R	DAL
RLR32C1430%&	143	1	F	S	P, R	DAL
RLR32C1470%&	147	1	F	S	P, R	DAL
RLR32C1500%&	150	1	F, G	S	P, R	DAL
RLR32C1540%&	154	1	F	S	P, R	DAL
RLR32C1580%&	158	1	F	S	P, R	DAL
RLR32C1600%&	160	1	G	S	P, R	DAL
RLR32C1620%&	162	1	F	S	P, R	DAL
RLR32C1650%&	165	1	F	S	P, R	DAL
RLR32C1690%&	169	1	F	S	P, R	DAL
RLR32C1740%&	174	1	F	S	P, R	DAL
RLR32C1780%&	178	1	F	S	P, R	DAL
RLR32C1800%&	180	1	G	S	P, R	DAL

RLR32C1820%&	182	1	F	S	P, R	DAL
RLR32C1870%&	187	1	F	S	P, R	DAL
RLR32C1910%&	191	1	F	S	P, R	DAL
RLR32C1960%&	196	1	F	S	P, R	DAL
RLR32C2000%&	200	1	F, G	S	P, R	DAL
RLR32C2050%&	205	1	F	S	P, R	DAL
RLR32C2100%&	210	1	F	S	P, R	DAL
RLR32C2150%&	215	1	F	S	P, R	DAL
RLR32C2200%&	220	1	G	S	P, R	DAL
RLR32C2210%&	221	1	F	S	P, R	DAL
RLR32C2260%&	226	1	F	S	P, R	DAL
RLR32C2320%&	232	1	F	S	P, R	DAL
RLR32C2370%&	237	1	F	S	P, R	DAL
RLR32C2400%&	240	1	G	S	P, R	DAL
RLR32C2430%&	243	1	F	S	P, R	DAL
RLR32C2490%&	249	1	F	S	P, R	DAL
RLR32C2550%&	255	1	F	S	P, R	DAL
RLR32C2610%&	261	1	F	S	P, R	DAL
RLR32C2670%&	267	1	F	S	P, R	DAL
RLR32C2700%&	270	1	G	S	P, R	DAL
RLR32C2740%&	274	1	F	S	P, R	DAL
RLR32C2800%&	280	1	F	S	P, R	DAL
RLR32C2870%&	287	1	F	S	P, R	DAL
RLR32C2940%&	294	1	F	S	P, R	DAL
RLR32C3000%&	300	1	G	S	P, R	DAL
RLR32C3010%&	301	1	F	S	P, R	DAL
RLR32C3090%&	309	1	F	S	P, R	DAL
RLR32C3160%&	316	1	F	S	P, R	DAL
RLR32C3240%&	324	1	F	S	P, R	DAL
RLR32C3300%&	330	1	G	S	P, R	DAL
RLR32C3320%&	332	1	F	S	P, R	DAL
RLR32C3400%&	340	1	F	S	P, R	DAL
RLR32C3480%&	348	1	F	S	P, R	DAL
RLR32C3570%&	357	1	F	S	P, R	DAL
RLR32C3600%&	360	1	G	S	P, R	DAL
RLR32C3650%&	365	1	F	S	P, R	DAL
RLR32C3740%&	374	1	F	S	P, R	DAL
RLR32C3830%&	383	1	F	S	P, R	DAL
RLR32C3900%&	390	1	G	S	P, R	DAL
RLR32C3920%&	392	1	F	S	P, R	DAL
RLR32C4020%&	402	1	F	S	P, R	DAL
RLR32C4120%&	412	1	F	S	P, R	DAL
RLR32C4220%&	422	1	F	S	P, R	DAL
RLR32C4300%&	430	1	G	S	P, R	DAL
RLR32C4320%&	432	1	F	S	P, R	DAL
RLR32C4420%&	442	1	F	S	P, R	DAL
RLR32C4530%&	453	1	F	S	P, R	DAL

RLR32C4640%&	464	1	F	S	P, R	DAL
RLR32C4700%&	470	1	G	S	P, R	DAL
RLR32C4750%&	475	1	F	S	P, R	DAL
RLR32C4870%&	487	1	F	S	P, R	DAL
RLR32C4990%&	499	1	F	S	P, R	DAL
RLR32C5100%&	510	1	G	S	P, R	DAL
RLR32C5110%&	511	1	F	S	P, R	DAL
RLR32C5230%&	523	1	F	S	P, R	DAL
RLR32C5360%&	536	1	F	S	P, R	DAL
RLR32C5490%&	549	1	F	S	P, R	DAL
RLR32C5600%&	560	1	G	S	P, R	DAL
RLR32C5620%&	562	1	F	S	P, R	DAL
RLR32C5760%&	576	1	F	S	P, R	DAL
RLR32C5900%&	590	1	F	S	P, R	DAL
RLR32C6040%&	604	1	F	S	P, R	DAL
RLR32C6190%&	619	1	F	S	P, R	DAL
RLR32C6200%&	620	1	G	S	P, R	DAL
RLR32C6340%&	634	1	F	S	P, R	DAL
RLR32C6490%&	649	1	F	S	P, R	DAL
RLR32C6650%&	665	1	F	S	P, R	DAL
RLR32C6800%&	680	1	G	S	P, R	DAL
RLR32C6810%&	681	1	F	S	P, R	DAL
RLR32C6980%&	698	1	F	S	P, R	DAL
RLR32C7150%&	715	1	F	S	P, R	DAL
RLR32C7320%&	732	1	F	S	P, R	DAL
RLR32C7500%&	750	1	F	S	P, R	DAL
RLR32C7680%&	768	1	F	S	P, R	DAL
RLR32C7870%&	787	1	F	S	P, R	DAL
RLR32C8060%&	806	1	F	S	P, R	DAL
RLR32C8200%&	820	1	G	S	P, R	DAL
RLR32C8250%&	825	1	F	S	P, R	DAL
RLR32C8450%&	845	1	F	S	P, R	DAL
RLR32C8670%&	867	1	F	S	P, R	DAL
RLR32C8870%&	887	1	F	S	P, R	DAL
RLR32C9090%&	909	1	F	S	P, R	DAL
RLR32C9100%&	910	1	G	S	P, R	DAL
RLR32C9310%&	931	1	F	S	P, R	DAL
RLR32C9530%&	953	1	F	S	P, R	DAL
RLR32C9760%&	976	1	F	S	P, R	DAL
RLR32C1001%&	1,000	1	F, G	S	P, R	DAL
RLR32C1021%&	1,020	1	F	S	P, R	DAL
RLR32C1051%&	1,050	1	F	S	P, R	DAL
RLR32C1071%&	1,070	1	F	S	P, R	DAL
RLR32C1101%&	1,100	1	F, G	S	P, R	DAL
RLR32C1131%&	1,130	1	F	S	P, R	DAL
RLR32C1151%&	1,150	1	F	S	P, R	DAL
RLR32C1181%&	1,180	1	F	S	P, R	DAL

RLR32C1201%&	1,200	1	G	S	P, R	DAL
RLR32C1211%&	1,210	1	F	S	P, R	DAL
RLR32C1241%&	1,240	1	F	S	P, R	DAL
RLR32C1271%&	1,270	1	F	S	P, R	DAL
RLR32C1301%&	1,300	1	F, G	S	P, R	DAL
RLR32C1331%&	1,330	1	F	S	P, R	DAL
RLR32C1371%&	1,370	1	F	S	P, R	DAL
RLR32C1401%&	1,400	1	F	S	P, R	DAL
RLR32C1431%&	1,430	1	F	S	P, R	DAL
RLR32C1471%&	1,470	1	F	S	P, R	DAL
RLR32C1501%&	1,500	1	F, G	S	P, R	DAL
RLR32C1541%&	1,540	1	F	S	P, R	DAL
RLR32C1581%&	1,580	1	F	S	P, R	DAL
RLR32C1601%&	1,600	1	G	S	P, R	DAL
RLR32C1621%&	1,620	1	F	S	P, R	DAL
RLR32C1651%&	1,650	1	F	S	P, R	DAL
RLR32C1691%&	1,690	1	F	S	P, R	DAL
RLR32C1741%&	1,740	1	F	S	P, R	DAL
RLR32C1781%&	1,780	1	F	S	P, R	DAL
RLR32C1801%&	1,800	1	G	S	P, R	DAL
RLR32C1821%&	1,820	1	F	S	P, R	DAL
RLR32C1871%&	1,870	1	F	S	P, R	DAL
RLR32C1911%&	1,910	1	F	S	P, R	DAL
RLR32C1961%&	1,960	1	F	S	P, R	DAL
RLR32C2001%&	2,000	1	F, G	S	P, R	DAL
RLR32C2051%&	2,050	1	F	S	P, R	DAL
RLR32C2101%&	2,100	1	F	S	P, R	DAL
RLR32C2151%&	2,150	1	F	S	P, R	DAL
RLR32C2201%&	2,200	1	G	S	P, R	DAL
RLR32C2211%&	2,210	1	F	S	P, R	DAL
RLR32C2261%&	2,260	1	F	S	P, R	DAL
RLR32C2321%&	2,320	1	F	S	P, R	DAL
RLR32C2371%&	2,370	1	F	S	P, R	DAL
RLR32C2401%&	2,400	1	G	S	P, R	DAL
RLR32C2431%&	2,430	1	F	S	P, R	DAL
RLR32C2491%&	2,490	1	F	S	P, R	DAL
RLR32C2551%&	2,550	1	F	S	P, R	DAL
RLR32C2611%&	2,610	1	F	S	P, R	DAL
RLR32C2671%&	2,670	1	F	S	P, R	DAL
RLR32C2701%&	2,700	1	G	S	P, R	DAL
RLR32C2741%&	2,740	1	F	S	P, R	DAL
RLR32C2801%&	2,800	1	F	S	P, R	DAL
RLR32C2871%&	2,870	1	F	S	P, R	DAL
RLR32C2941%&	2,940	1	F	S	P, R	DAL
RLR32C3001%&	3,000	1	G	S	P, R	DAL
RLR32C3011%&	3,010	1	F	S	P, R	DAL
RLR32C3091%&	3,090	1	F	S	P, R	DAL

RLR32C3161%&	3,160	1	F	S	P, R	DAL
RLR32C3241%&	3,240	1	F	S	P, R	DAL
RLR32C3301%&	3,300	1	G	S	P, R	DAL
RLR32C3321%&	3,320	1	F	S	P, R	DAL
RLR32C3401%&	3,400	1	F	S	P, R	DAL
RLR32C3481%&	3,480	1	F	S	P, R	DAL
RLR32C3571%&	3,570	1	F	S	P, R	DAL
RLR32C3601%&	3,600	1	G	S	P, R	DAL
RLR32C3651%&	3,650	1	F	S	P, R	DAL
RLR32C3741%&	3,740	1	F	S	P, R	DAL
RLR32C3831%&	3,830	1	F	S	P, R	DAL
RLR32C3901%&	3,900	1	G	S	P, R	DAL
RLR32C3921%&	3,920	1	F	S	P, R	DAL
RLR32C4021%&	4,020	1	F	S	P, R	DAL
RLR32C4121%&	4,120	1	F	S	P, R	DAL
RLR32C4221%&	4,220	1	F	S	P, R	DAL
RLR32C4301%&	4,300	1	G	S	P, R	DAL
RLR32C4321%&	4,320	1	F	S	P, R	DAL
RLR32C4421%&	4,420	1	F	S	P, R	DAL
RLR32C4531%&	4,530	1	F	S	P, R	DAL
RLR32C4641%&	4,640	1	F	S	P, R	DAL
RLR32C4701%&	4,700	1	G	S	P, R	DAL
RLR32C4751%&	4,750	1	F	S	P, R	DAL
RLR32C4871%&	4,870	1	F	S	P, R	DAL
RLR32C4991%&	4,990	1	F	S	P, R	DAL
RLR32C5101%&	5,100	1	G	S	P, R	DAL
RLR32C5111%&	5,110	1	F	S	P, R	DAL
RLR32C5231%&	5,230	1	F	S	P, R	DAL
RLR32C5361%&	5,360	1	F	S	P, R	DAL
RLR32C5491%&	5,490	1	F	S	P, R	DAL
RLR32C5601%&	5,600	1	G	S	P, R	DAL
RLR32C5621%&	5,620	1	F	S	P, R	DAL
RLR32C5761%&	5,760	1	F	S	P, R	DAL
RLR32C5901%&	5,900	1	F	S	P, R	DAL
RLR32C6041%&	6,040	1	F	S	P, R	DAL
RLR32C6191%&	6,190	1	F	S	P, R	DAL
RLR32C6201%&	6,200	1	G	S	P, R	DAL
RLR32C6341%&	6,340	1	F	S	P, R	DAL
RLR32C6491%&	6,490	1	F	S	P, R	DAL
RLR32C6651%&	6,650	1	F	S	P, R	DAL
RLR32C6801%&	6,800	1	G	S	P, R	DAL
RLR32C6811%&	6,810	1	F	S	P, R	DAL
RLR32C6981%&	6,980	1	F	S	P, R	DAL
RLR32C7151%&	7,150	1	F	S	P, R	DAL
RLR32C7321%&	7,320	1	F	S	P, R	DAL
RLR32C7501%&	7,500	1	F	S	P, R	DAL
RLR32C7681%&	7,680	1	F	S	P, R	DAL

RLR32C7871%&	7,870	1	F	S	P, R	DAL
RLR32C8061%&	8,060	1	F	S	P, R	DAL
RLR32C8201%&	8,200	1	G	S	P, R	DAL
RLR32C8251%&	8,250	1	F	S	P, R	DAL
RLR32C8451%&	8,450	1	F	S	P, R	DAL
RLR32C8671%&	8,670	1	F	S	P, R	DAL
RLR32C8871%&	8,870	1	F	S	P, R	DAL
RLR32C9091%&	9,090	1	F	S	P, R	DAL
RLR32C9101%&	9,100	1	G	S	P, R	DAL
RLR32C9311%&	9,310	1	F	S	P, R	DAL
RLR32C9531%&	9,530	1	F	S	P, R	DAL
RLR32C9761%&	9,760	1	F	S	P, R	DAL
RLR32C1002%&	10,000	1	F, G	S	P, R	DAL
RLR32C1022%&	10,200	1	F	S	P, R	DAL
RLR32C1052%&	10,500	1	F	S	P, R	DAL
RLR32C1072%&	10,700	1	F	S	P, R	DAL
RLR32C1102%&	11,000	1	F, G	S	P, R	DAL
RLR32C1132%&	11,300	1	F	S	P, R	DAL
RLR32C1152%&	11,500	1	F	S	P, R	DAL
RLR32C1182%&	11,800	1	F	S	P, R	DAL
RLR32C1202%&	12,000	1	G	S	P, R	DAL
RLR32C1212%&	12,100	1	F	S	P, R	DAL
RLR32C1242%&	12,400	1	F	S	P, R	DAL
RLR32C1272%&	12,700	1	F	S	P, R	DAL
RLR32C1302%&	13,000	1	F, G	S	P, R	DAL
RLR32C1332%&	13,300	1	F	S	P, R	DAL
RLR32C1372%&	13,700	1	F	S	P, R	DAL
RLR32C1402%&	14,000	1	F	S	P, R	DAL
RLR32C1432%&	14,300	1	F	S	P, R	DAL
RLR32C1472%&	14,700	1	F	S	P, R	DAL
RLR32C1502%&	15,000	1	F, G	S	P, R	DAL
RLR32C1542%&	15,400	1	F	S	P, R	DAL
RLR32C1582%&	15,800	1	F	S	P, R	DAL
RLR32C1602%&	16,000	1	G	S	P, R	DAL
RLR32C1622%&	16,200	1	F	S	P, R	DAL
RLR32C1652%&	16,500	1	F	S	P, R	DAL
RLR32C1692%&	16,900	1	F	S	P, R	DAL
RLR32C1742%&	17,400	1	F	S	P, R	DAL
RLR32C1782%&	17,800	1	F	S	P, R	DAL
RLR32C1802%&	18,000	1	G	S	P, R	DAL
RLR32C1822%&	18,200	1	F	S	P, R	DAL
RLR32C1872%&	18,700	1	F	S	P, R	DAL
RLR32C1912%&	19,100	1	F	S	P, R	DAL
RLR32C1962%&	19,600	1	F	S	P, R	DAL
RLR32C2002%&	20,000	1	F, G	S	P, R	DAL
RLR32C2052%&	20,500	1	F	S	P, R	DAL
RLR32C2102%&	21,000	1	F	S	P, R	DAL

RLR32C2152%&	21,500	1	F	S	P, R	DAL
RLR32C2202%&	22,000	1	G	S	P, R	DAL
RLR32C2212%&	22,100	1	F	S	P, R	DAL
RLR32C2262%&	22,600	1	F	S	P, R	DAL
RLR32C2322%&	23,200	1	F	S	P, R	DAL
RLR32C2372%&	23,700	1	F	S	P, R	DAL
RLR32C2402%&	24,000	1	G	S	P, R	DAL
RLR32C2432%&	24,300	1	F	S	P, R	DAL
RLR32C2492%&	24,900	1	F	S	P, R	DAL
RLR32C2552%&	25,500	1	F	S	P, R	DAL
RLR32C2612%&	26,100	1	F	S	P, R	DAL
RLR32C2672%&	26,700	1	F	S	P, R	DAL
RLR32C2702%&	27,000	1	G	S	P, R	DAL
RLR32C2742%&	27,400	1	F	S	P, R	DAL
RLR32C2802%&	28,000	1	F	S	P, R	DAL
RLR32C2872%&	28,700	1	F	S	P, R	DAL
RLR32C2942%&	29,400	1	F	S	P, R	DAL
RLR32C3002%&	30,000	1	G	S	P, R	DAL
RLR32C3012%&	30,100	1	F	S	P, R	DAL
RLR32C3092%&	30,900	1	F	S	P, R	DAL
RLR32C3162%&	31,600	1	F	S	P, R	DAL
RLR32C3242%&	32,400	1	F	S	P, R	DAL
RLR32C3302%&	33,000	1	G	S	P, R	DAL
RLR32C3322%&	33,200	1	F	S	P, R	DAL
RLR32C3402%&	34,000	1	F	S	P, R	DAL
RLR32C3482%&	34,800	1	F	S	P, R	DAL
RLR32C3572%&	35,700	1	F	S	P, R	DAL
RLR32C3602%&	36,000	1	G	S	P, R	DAL
RLR32C3652%&	36,500	1	F	S	P, R	DAL
RLR32C3742%&	37,400	1	F	S	P, R	DAL
RLR32C3832%&	38,300	1	F	S	P, R	DAL
RLR32C3902%&	39,000	1	G	S	P, R	DAL
RLR32C3922%&	39,200	1	F	S	P, R	DAL
RLR32C4022%&	40,200	1	F	S	P, R	DAL
RLR32C4122%&	41,200	1	F	S	P, R	DAL
RLR32C4222%&	42,200	1	F	S	P, R	DAL
RLR32C4302%&	43,000	1	G	S	P, R	DAL
RLR32C4322%&	43,200	1	F	S	P, R	DAL
RLR32C4422%&	44,200	1	F	S	P, R	DAL
RLR32C4532%&	45,300	1	F	S	P, R	DAL
RLR32C4642%&	46,400	1	F	S	P, R	DAL
RLR32C4702%&	47,000	1	G	S	P, R	DAL
RLR32C4752%&	47,500	1	F	S	P, R	DAL
RLR32C4872%&	48,700	1	F	S	P, R	DAL
RLR32C4992%&	49,900	1	F	S	P, R	DAL
RLR32C5102%&	51,000	1	G	S	P, R	DAL
RLR32C5112%&	51,100	1	F	S	P, R	DAL

RLR32C5232%&	52,300	1	F	S	P, R	DAL
RLR32C5362%&	53,600	1	F	S	P, R	DAL
RLR32C5492%&	54,900	1	F	S	P, R	DAL
RLR32C5602%&	56,000	1	G	S	P, R	DAL
RLR32C5622%&	56,200	1	F	S	P, R	DAL
RLR32C5762%&	57,600	1	F	S	P, R	DAL
RLR32C5902%&	59,000	1	F	S	P, R	DAL
RLR32C6042%&	60,400	1	F	S	P, R	DAL
RLR32C6192%&	61,900	1	F	S	P, R	DAL
RLR32C6202%&	62,000	1	G	S	P, R	DAL
RLR32C6342%&	63,400	1	F	S	P, R	DAL
RLR32C6492%&	64,900	1	F	S	P, R	DAL
RLR32C6652%&	66,500	1	F	S	P, R	DAL
RLR32C6802%&	68,000	1	G	S	P, R	DAL
RLR32C6812%&	68,100	1	F	S	P, R	DAL
RLR32C6982%&	69,800	1	F	S	P, R	DAL
RLR32C7152%&	71,500	1	F	S	P, R	DAL
RLR32C7322%&	73,200	1	F	S	P, R	DAL
RLR32C7502%&	75,000	1	F	S	P, R	DAL
RLR32C7682%&	76,800	1	F	S	P, R	DAL
RLR32C7872%&	78,700	1	F	S	P, R	DAL
RLR32C8062%&	80,600	1	F	S	P, R	DAL
RLR32C8202%&	82,000	1	G	S	P, R	DAL
RLR32C8252%&	82,500	1	F	S	P, R	DAL
RLR32C8452%&	84,500	1	F	S	P, R	DAL
RLR32C8672%&	86,700	1	F	S	P, R	DAL
RLR32C8872%&	88,700	1	F	S	P, R	DAL
RLR32C9092%&	90,900	1	F	S	P, R	DAL
RLR32C9102%&	91,000	1	G	S	P, R	DAL
RLR32C9312%&	93,100	1	F	S	P, R	DAL
RLR32C9532%&	95,300	1	F	S	P, R	DAL
RLR32C9762%&	97,600	1	F	S	P, R	DAL
RLR32C1003%&	100,000	1	F, G	S	P, R	DAL
RLR32C1023%&	102,000	1	F	S	P, R	DAL
RLR32C1053%&	105,000	1	F	S	P, R	DAL
RLR32C1073%&	107,000	1	F	S	P, R	DAL
RLR32C1103%&	110,000	1	F, G	S	P, R	DAL
RLR32C1133%&	113,000	1	F	S	P, R	DAL
RLR32C1153%&	115,000	1	F	S	P, R	DAL
RLR32C1183%&	118,000	1	F	S	P, R	DAL
RLR32C1203%&	120,000	1	G	S	P, R	DAL
RLR32C1213%&	121,000	1	F	S	P, R	DAL
RLR32C1243%&	124,000	1	F	S	P, R	DAL
RLR32C1273%&	127,000	1	F	S	P, R	DAL
RLR32C1303%&	130,000	1	F, G	S	P, R	DAL
RLR32C1333%&	133,000	1	F	S	P, R	DAL
RLR32C1373%&	137,000	1	F	S	P, R	DAL

RLR32C1403%&	140,000	1	F	S	P, R	DAL
RLR32C1433%&	143,000	1	F	S	P, R	DAL
RLR32C1473%&	147,000	1	F	S	P, R	DAL
RLR32C1503%&	150,000	1	F, G	S	P, R	DAL
RLR32C1543%&	154,000	1	F	S	P, R	DAL
RLR32C1583%&	158,000	1	F	S	P, R	DAL
RLR32C1603%&	160,000	1	G	S	P, R	DAL
RLR32C1623%&	162,000	1	F	S	P, R	DAL
RLR32C1653%&	165,000	1	F	S	P, R	DAL
RLR32C1693%&	169,000	1	F	S	P, R	DAL
RLR32C1743%&	174,000	1	F	S	P, R	DAL
RLR32C1783%&	178,000	1	F	S	P, R	DAL
RLR32C1803%&	180,000	1	G	S	P, R	DAL
RLR32C1823%&	182,000	1	F	S	P, R	DAL
RLR32C1873%&	187,000	1	F	S	P, R	DAL
RLR32C1913%&	191,000	1	F	S	P, R	DAL
RLR32C1963%&	196,000	1	F	S	P, R	DAL
RLR32C2003%&	200,000	1	F, G	S	P, R	DAL
RLR32C2053%&	205,000	1	F	S	P, R	DAL
RLR32C2103%&	210,000	1	F	S	P, R	DAL
RLR32C2153%&	215,000	1	F	S	P, R	DAL
RLR32C2203%&	220,000	1	G	S	P, R	DAL
RLR32C2213%&	221,000	1	F	S	P, R	DAL
RLR32C2263%&	226,000	1	F	S	P, R	DAL
RLR32C2323%&	232,000	1	F	S	P, R	DAL
RLR32C2373%&	237,000	1	F	S	P, R	DAL
RLR32C2403%&	240,000	1	G	S	P, R	DAL
RLR32C2433%&	243,000	1	F	S	P, R	DAL
RLR32C2493%&	249,000	1	F	S	P, R	DAL
RLR32C2553%&	255,000	1	F	S	P, R	DAL
RLR32C2613%&	261,000	1	F	S	P, R	DAL
RLR32C2673%&	267,000	1	F	S	P, R	DAL
RLR32C2703%&	270,000	1	G	S	P, R	DAL
RLR32C2743%&	274,000	1	F	S	P, R	DAL
RLR32C2803%&	280,000	1	F	S	P, R	DAL
RLR32C2873%&	287,000	1	F	S	P, R	DAL
RLR32C2943%&	294,000	1	F	S	P, R	DAL
RLR32C3003%&	300,000	1	G	S	P, R	DAL
RLR32C3013%&	301,000	1	F	S	P, R	DAL
RLR32C3093%&	309,000	1	F	S	P, R	DAL
RLR32C3163%&	316,000	1	F	S	P, R	DAL
RLR32C3243%&	324,000	1	F	S	P, R	DAL
RLR32C3303%&	330,000	1	G	S	P, R	DAL
RLR32C3323%&	332,000	1	F	S	P, R	DAL
RLR32C3403%&	340,000	1	F	S	P, R	DAL
RLR32C3483%&	348,000	1	F	S	P, R	DAL
RLR32C3573%&	357,000	1	F	S	P, R	DAL

RLR32C3603%&	360,000	1	G	S	P, R	DAL
RLR32C3653%&	365,000	1	F	S	P, R	DAL
RLR32C3743%&	374,000	1	F	S	P, R	DAL
RLR32C3833%&	383,000	1	F	S	P, R	DAL
RLR32C3903%&	390,000	1	G	S	P, R	DAL
RLR32C3923%&	392,000	1	F	S	P, R	DAL
RLR32C4023%&	402,000	1	F	S	P, R	DAL
RLR32C4123%&	412,000	1	F	S	P, R	DAL
RLR32C4223%&	422,000	1	F	S	P, R	DAL
RLR32C4303%&	430,000	1	G	S	P, R	DAL
RLR32C4323%&	432,000	1	F	S	P, R	DAL
RLR32C4423%&	442,000	1	F	S	P, R	DAL
RLR32C4533%&	453,000	1	F	S	P, R	DAL
RLR32C4643%&	464,000	1	F	S	P, R	DAL
RLR32C4703%&	470,000	1	G	S	P, R	DAL
RLR32C4753%&	475,000	1	F	S	P, R	DAL
RLR32C4873%&	487,000	1	F	S	P, R	DAL
RLR32C4993%&	499,000	1	F	S	P, R	DAL
RLR32C5103%&	510,000	1	G	S	P, R	DAL
RLR32C5113%&	511,000	1	F	S	P, R	DAL
RLR32C5233%&	523,000	1	F	S	P, R	DAL
RLR32C5363%&	536,000	1	F	S	P, R	DAL
RLR32C5493%&	549,000	1	F	S	P, R	DAL
RLR32C5603%&	560,000	1	G	S	P, R	DAL
RLR32C5623%&	562,000	1	F	S	P, R	DAL
RLR32C5763%&	576,000	1	F	S	P, R	DAL
RLR32C5903%&	590,000	1	F	S	P, R	DAL
RLR32C6043%&	604,000	1	F	S	P, R	DAL
RLR32C6193%&	619,000	1	F	S	P, R	DAL
RLR32C6203%&	620,000	1	G	S	P, R	DAL
RLR32C6343%&	634,000	1	F	S	P, R	DAL
RLR32C6493%&	649,000	1	F	S	P, R	DAL
RLR32C6653%&	665,000	1	F	S	P, R	DAL
RLR32C6803%&	680,000	1	G	S	P, R	DAL
RLR32C6813%&	681,000	1	F	S	P, R	DAL
RLR32C6983%&	698,000	1	F	S	P, R	DAL
RLR32C7153%&	715,000	1	F	S	P, R	DAL
RLR32C7323%&	732,000	1	F	S	P, R	DAL
RLR32C7503%&	750,000	1	F	S	P, R	DAL
RLR32C7683%&	768,000	1	F	S	P, R	DAL
RLR32C7873%&	787,000	1	F	S	P, R	DAL
RLR32C8063%&	806,000	1	F	S	P, R	DAL
RLR32C8203%&	820,000	1	G	S	P, R	DAL
RLR32C8253%&	825,000	1	F	S	P, R	DAL
RLR32C8453%&	845,000	1	F	S	P, R	DAL
RLR32C8673%&	867,000	1	F	S	P, R	DAL
RLR32C8873%&	887,000	1	F	S	P, R	DAL

RLR32C9093%&	909,000	1	F	S	P, R	DAL
RLR32C9103%&	910,000	1	G	S	P, R	DAL
RLR32C9313%&	931,000	1	F	S	P, R	DAL
RLR32C9533%&	953,000	1	F	S	P, R	DAL
RLR32C9763%&	976,000	1	F	S	P, R	DAL
RLR32C1004%&	1,000,000	1	F, G	S	P, R	DAL
RLR32C1024%&	1,020,000	1	F	S	P, R	-
RLR32C1054%&	1,050,000	1	F	S	P, R	-
RLR32C1074%&	1,070,000	1	F	S	P, R	-
RLR32C1104%&	1,100,000	1	F, G	S	P, R	-
RLR32C1134%&	1,130,000	1	F	S	P, R	-
RLR32C1154%&	1,150,000	1	F	S	P, R	-
RLR32C1184%&	1,180,000	1	F	S	P, R	-
RLR32C1204%&	1,200,000	1	G	S	P, R	-
RLR32C1214%&	1,210,000	1	F	S	P, R	-
RLR32C1244%&	1,240,000	1	F	S	P, R	-
RLR32C1274%&	1,270,000	1	F	S	P, R	-
RLR32C1304%&	1,300,000	1	F, G	S	P, R	-
RLR32C1334%&	1,330,000	1	F	S	P, R	-
RLR32C1374%&	1,370,000	1	F	S	P, R	-
RLR32C1404%&	1,400,000	1	F	S	P, R	-
RLR32C1434%&	1,430,000	1	F	S	P, R	-
RLR32C1474%&	1,470,000	1	F	S	P, R	-
RLR32C1504%&	1,500,000	1	F, G	S	P, R	-
RLR32C1544%&	1,540,000	1	F	S	P, R	-
RLR32C1584%&	1,580,000	1	F	S	P, R	-
RLR32C1604%&	1,600,000	1	G	S	P, R	-
RLR32C1624%&	1,620,000	1	F	S	P, R	-
RLR32C1654%&	1,650,000	1	F	S	P, R	-
RLR32C1694%&	1,690,000	1	F	S	P, R	-
RLR32C1744%&	1,740,000	1	F	S	P, R	-
RLR32C1784%&	1,780,000	1	F	S	P, R	-
RLR32C1804%&	1,800,000	1	G	S	P, R	-
RLR32C1824%&	1,820,000	1	F	S	P, R	-
RLR32C1874%&	1,870,000	1	F	S	P, R	-
RLR32C1914%&	1,910,000	1	F	S	P, R	-
RLR32C1964%&	1,960,000	1	F	S	P, R	-
RLR32C2004%&	2,000,000	1	F, G	S	P, R	-
RLR32C2054%&	2,050,000	1	F	S	P, R	-
RLR32C2104%&	2,100,000	1	F	S	P, R	-
RLR32C2154%&	2,150,000	1	F	S	P, R	-
RLR32C2204%&	2,200,000	1	G	S	P, R	-
RLR32C2214%&	2,210,000	1	F	S	P, R	-
RLR32C2264%&	2,260,000	1	F	S	P, R	-
RLR32C2324%&	2,320,000	1	F	S	P, R	-
RLR32C2374%&	2,370,000	1	F	S	P, R	-
RLR32C2404%&	2,400,000	1	G	S	P, R	-

RLR32C2434%&	2,430,000	1	F	S	P, R	-
RLR32C2494%&	2,490,000	1	F	S	P, R	-
RLR32C2554%&	2,550,000	1	F	S	P, R	-
RLR32C2614%&	2,610,000	1	F	S	P, R	-
RLR32C2674%&	2,670,000	1	F	S	P, R	-
RLR32C2704%&	2,700,000	1	G	S	P, R	-

RLR32 RESISTORS DECADE BREAKDOWN

Click on the link below to see the associated parts selection listing:

Resistance Range
10.0 Ohms through 97.6 Ohms
100 Ohms through 976 Ohms
1,000 Ohms through 9,760 Ohms
10,000 Ohms through 97,600 Ohms
100,000 Ohms through 976,000 Ohms
1,000,000 Ohms through 2,700,000 Ohms

RLR32 Film Resistors : 10.0 Ohms through 97.6 Ohms

	Resistance	Power	Resistance	Level 1	Level 2	
Part Number	Value (Ohms)	Rating (W)	Tolerance (%)	(FRL)(&)	(FRL)(&)	Manufacturer
RLR32C10R0%&	10.0	1	F, G	S	P, R	DAL
RLR32C10R2%&	10.2	1	F	S	P, R	DAL
RLR32C10R5%&	10.5	1	F	S	P, R	DAL
RLR32C10R7%&	10.7	1	F	S	P, R	DAL
RLR32C11R0%&	11.0	1	F, G	S	P, R	DAL
RLR32C11R3%&	11.3	1	F	S	P, R	DAL
RLR32C11R5%&	11.5	1	F	S	P, R	DAL
RLR32C11R8%&	11.8	1	F	S	P, R	DAL
RLR32C12R0%&	12.0	1	G	S	P, R	DAL
RLR32C12R1%&	12.1	1	F	S	P, R	DAL
RLR32C12R4%&	12.4	1	F	S	P, R	DAL
RLR32C12R7%&	12.7	1	F	S	P, R	DAL
RLR32C13R0%&	13.0	1	F, G	S	P, R	DAL
RLR32C13R3%&	13.3	1	F	S	P, R	DAL
	Resistance	Power	Resistance	Level 1	Level 2	
Part Number	Value (Ohms)	Rating (W)	Tolerance (%)	(FRL)(&)	(FRL)(&)	Manufacturer
RLR32C13R7%&	13.7	1	F	S	P, R	DAL
RLR32C14R0%&	14.0	1	F	S	P, R	DAL
RLR32C14R3%&	14.3	1	F	S	P, R	DAL
RLR32C14R7%&	14.7	1	F	S	P, R	DAL
RLR32C15R0%&	15.0	1	F, G	S	P, R	DAL
RLR32C15R4%&	15.4	1	F	S	P, R	DAL

RLR32C15R8%&	15.8	1	F	S	P, R	DAL
RLR32C16R0%&	16.0	1	G	S	P, R	DAL
RLR32C16R2%&	16.2	1	F	S	P, R	DAL
RLR32C16R5%&	16.5	1	F	S	P, R	DAL
RLR32C16R9%&	16.9	1	F	S	P, R	DAL
RLR32C17R4%&	17.4	1	F	S	P, R	DAL
RLR32C17R8%&	17.8	1	F	S	P, R	DAL
RLR32C18R0%&	18.0	1	G	S	P, R	DAL
	Resistance	Power	Resistance	Level 1	Level 2	
Part Number	Value (Ohms)	Rating (W)	Tolerance (%)	(FRL)(&)	(FRL)(&)	Manufacturer
RLR32C18R2%&	18.2	1	F	S	P, R	DAL
RLR32C18R7%&	18.7	1	F	S	P, R	DAL
RLR32C19R1%&	19.1	1	F	S	P, R	DAL
RLR32C19R6%&	19.6	1	F	S	P, R	DAL
RLR32C20R0%&	20.0	1	F, G	S	P, R	DAL
RLR32C20R5%&	20.5	1	F	S	P, R	DAL
RLR32C21R0%&	21.0	1	F	S	P, R	DAL
RLR32C21R5%&	21.5	1	F	S	P, R	DAL
RLR32C22R0%&	22.0	1	G	S	P, R	DAL
RLR32C22R1%&	22.1	1	F	S	P, R	DAL
RLR32C22R6%&	22.6	1	F	S	P, R	DAL
RLR32C23R2%&	23.2	1	F	S	P, R	DAL
RLR32C23R7%&	23.7	1	F	S	P, R	DAL
RLR32C24R0%&	24.0	1	G	S	P, R	DAL
	Resistance	Power	Resistance	Level 1	Level 2	
Part Number	Value (Ohms)	Rating (W)	Tolerance (%)	(FRL)(&)	(FRL)(&)	Manufacturer
RLR32C24R3%&	24.3	1	F	S	P, R	DAL
RLR32C24R9%&	24.9	1	F	S	P, R	DAL
RLR32C25R5%&	25.5	1	F	S	P, R	DAL
RLR32C26R1%&	26.1	1	F	S	P, R	DAL
RLR32C26R7%&	26.7	1	F	S	P, R	DAL
RLR32C27R0%&	27.0	1	G	S	P, R	DAL
RLR32C27R4%&	27.4	1	F	S	P, R	DAL
RLR32C28R0%&	28.0	1	F	S	P, R	DAL
RLR32C28R7%&	28.7	1	F	S	P, R	DAL
RLR32C29R4%&	29.4	1	F	S	P, R	DAL
RLR32C30R0%&	30.0	1	G	S	P, R	DAL
RLR32C30R1%&	30.1	1	F	S	P, R	DAL
	Resistance	Power	Resistance	Level 1	Level 2	
Part Number	Value (Ohms)	Rating (W)	Tolerance (%)	(FRL)(&)	(FRL)(&)	Manufacturer
RLR32C30R9%&	30.9	1	F	S	P, R	DAL
RLR32C31R6%&	31.6	1	F	S	P, R	DAL
RLR32C32R4%&	32.4	1	F	S	P, R	DAL
RLR32C33R0%&	33.0	1	G	S	P, R	DAL
RLR32C33R2%&	33.2	1	F	S	P, R	DAL
RLR32C34R0%&	34.0	1	F	S	P, R	DAL
RLR32C34R8%&	34.8	1	F	S	P, R	DAL

RLR32C35R7%&	35.7	1	F	S	P, R	DAL
RLR32C36R0%&	36.0	1	G	S	P, R	DAL
RLR32C36R5%&	36.5	1	F	S	P, R	DAL
RLR32C37R4%&	37.4	1	F	S	P, R	DAL
RLR32C38R3%&	38.3	1	F	S	P, R	DAL
RLR32C39R0%&	39.0	1	G	S	P, R	DAL
RLR32C39R2%&	39.2	1	F	S	P, R	DAL
	Resistance	Power	Resistance	Level 1	Level 2	
Part Number	Value (Ohms)	Rating (W)	Tolerance (%)	(FRL)(&)	(FRL)(&)	Manufacturer
RLR32C40R2%&	40.2	1	F	S	P, R	DAL
RLR32C41R2%&	41.2	1	F	S	P, R	DAL
RLR32C42R2%&	42.2	1	F	S	P, R	DAL
RLR32C43R0%&	43.0	1	G	S	P, R	DAL
RLR32C43R2%&	43.2	1	F	S	P, R	DAL
RLR32C44R2%&	44.2	1	F	S	P, R	DAL
RLR32C45R3%&	45.3	1	F	S	P, R	DAL
RLR32C46R4%&	46.4	1	F	S	P, R	DAL
RLR32C47R0%&	47.0	1	G	S	P, R	DAL
RLR32C47R5%&	47.5	1	F	S	P, R	DAL
RLR32C48R7%&	48.7	1	F	S	P, R	DAL
RLR32C49R9%&	49.9	1	F	S	P, R	DAL
RLR32C51R0%&	51.0	1	G	S	P, R	DAL
RLR32C51R1%&	51.1	1	F	S	P, R	DAL
	Resistance	Power	Resistance	Level 1	Level 2	
Part Number	Value (Ohms)	Rating (W)	Tolerance (%)	(FRL)(&)	(FRL)(&)	Manufacturer
RLR32C52R3%&	52.3	1	F	S	P, R	DAL
RLR32C53R6%&	53.6	1	F	S	P, R	DAL
RLR32C54R9%&	54.9	1	F	S	P, R	DAL
RLR32C56R0%&	56.0	1	G	S	P, R	DAL
RLR32C56R2%&	56.2	1	F	S	P, R	DAL
RLR32C57R6%&	57.6	1	F	S	P, R	DAL
RLR32C59R0%&	59.0	1	F	S	P, R	DAL
RLR32C60R4%&	60.4	1	F	S	P, R	DAL
RLR32C61R9%&	61.9	1	F	S	P, R	DAL
RLR32C62R0%&	62.0	1	G	S	P, R	DAL
RLR32C63R4%&	63.4	1	F	S	P, R	DAL
RLR32C64R9%&	64.9	1	F	S	P, R	DAL
RLR32C66R5%&	66.5	1	F	S	P, R	DAL
RLR32C68R0%&	68.0	1	G	S	P, R	DAL
	Resistance	Power	Resistance	Level 1	Level 2	
Part Number	Value (Ohms)	Rating (W)	Tolerance (%)	(FRL)(&)	(FRL)(&)	Manufacturer
RLR32C68R1%&	68.1	1	F	S	P, R	DAL
RLR32C69R8%&	69.8	1	F	S	P, R	DAL
RLR32C71R5%&	71.5	1	F	S	P, R	DAL
RLR32C73R2%&	73.2	1	F	S	P, R	DAL
RLR32C75R0%&	75.0	1	F	S	P, R	DAL
RLR32C76R8%&	76.8	1	F	S	P, R	DAL

RLR32C78R7%&	78.7	1	F	S	P, R	DAL
RLR32C80R6%&	80.6	1	F	S	P, R	DAL
RLR32C82R0%&	82.0	1	G	S	P, R	DAL
RLR32C82R5%&	82.5	1	F	S	P, R	DAL
RLR32C84R5%&	84.5	1	F	S	P, R	DAL
RLR32C86R7%&	86.7	1	F	S	P, R	DAL
RLR32C88R7%&	88.7	1	F	S	P, R	DAL
RLR32C90R9%&	90.9	1	F	S	P, R	DAL
	Resistance	Power	Resistance	Level 1	Level 2	
Part Number	Value (Ohms)	Rating (W)	Tolerance (%)	(FRL)(&)	(FRL)(&)	Manufacturer
RLR32C91R0%&	91.0	1	G	S	P, R	DAL
RLR32C93R1%&	93.1	1	F	S	P, R	DAL
RLR32C95R3%&	95.3	1	F	S	P, R	DAL
RLR32C97R6%&	97.6	1	F	S	P, R	DAL
	Resistance	Power	Resistance	Level 1	Level 2	
Part Number	Value (Ohms)	Rating (W)	Tolerance (%)	(FRL)(&)	(FRL)(&)	Manufacturer

RLR32 Film Resistors: 100 Ohms through 976 Ohms

	Resistance	Power	Resistance	Level 1	Level 2	
Part Number	Value (Ohms)	Rating (W)	Tolerance (%)	(FRL)(&)	(FRL)(&)	Manufacturer
RLR32C1000%&	100	1	F, G	S	P, R	DAL
RLR32C1020%&	102	1	F	S	P, R	DAL
RLR32C1050%&	105	1	F	S	P, R	DAL
RLR32C1070%&	107	1	F	S	P, R	DAL
RLR32C1100%&	110	1	F, G	S	P, R	DAL
RLR32C1130%&	113	1	F	S	P, R	DAL
RLR32C1150%&	115	1	F	S	P, R	DAL
RLR32C1180%&	118	1	F	S	P, R	DAL
RLR32C1200%&	120	1	G	S	P, R	DAL
RLR32C1210%&	121	1	F	S	P, R	DAL
RLR32C1240%&	124	1	F	S	P, R	DAL
RLR32C1270%&	127	1	F	S	P, R	DAL
RLR32C1300%&	130	1	F, G	S	P, R	DAL
RLR32C1330%&	133	1	F	S	P, R	DAL
	Resistance	Power	Resistance	Level 1	Level 2	
Part Number	Value (Ohms)	Rating (W)	Tolerance (%)	(FRL)(&)	(FRL)(&)	Manufacturer
RLR32C1370%&	137	1	F	S	P, R	DAL
RLR32C1400%&	140	1	F	S	P, R	DAL
RLR32C1430%&	143	1	F	S	P, R	DAL
RLR32C1470%&	147	1	F	S	P, R	DAL
RLR32C1500%&	150	1	F, G	S	P, R	DAL
RLR32C1540%&	154	1	F	S	P, R	DAL
RLR32C1580%&	158	1	F	S	P, R	DAL
RLR32C1600%&	160	1	G	S	P, R	DAL

RLR32C1620%&	162	1	F	S	P, R	DAL
RLR32C1650%&	165	1	F	S	P, R	DAL
RLR32C1690%&	169	1	F	S	P, R	DAL
RLR32C1740%&	174	1	F	S	P, R	DAL
RLR32C1780%&	178	1	F	S	P, R	DAL
RLR32C1800%&	180	1	G	S	P, R	DAL
	Resistance	Power	Resistance	Level 1	Level 2	
Part Number	Value (Ohms)	Rating (W)	Tolerance (%)	(FRL)(&)	(FRL)(&)	Manufacturer
RLR32C1820%&	182	1	F	S	P, R	DAL
RLR32C1870%&	187	1	F	S	P, R	DAL
RLR32C1910%&	191	1	F	S	P, R	DAL
RLR32C1960%&	196	1	F	S	P, R	DAL
RLR32C2000%&	200	1	F, G	S	P, R	DAL
RLR32C2050%&	205	1	F	S	P, R	DAL
RLR32C2100%&	210	1	F	S	P, R	DAL
RLR32C2150%&	215	1	F	S	P, R	DAL
RLR32C2200%&	220	1	G	S	P, R	DAL
RLR32C2210%&	221	1	F	S	P, R	DAL
RLR32C2260%&	226	1	F	S	P, R	DAL
RLR32C2320%&	232	1	F	S	P, R	DAL
RLR32C2370%&	237	1	F	S	P, R	DAL
RLR32C2400%&	240	1	G	S	P, R	DAL
	Resistance	Power	Resistance	Level 1	Level 2	
Part Number	Value (Ohms)	Rating (W)	Tolerance (%)	(FRL)(&)	(FRL)(&)	Manufacturer
RLR32C2430%&	243	1	F	S	P, R	DAL
RLR32C2490%&	249	1	F	S	P, R	DAL
RLR32C2550%&	255	1	F	S	P, R	DAL
RLR32C2610%&	261	1	F	S	P, R	DAL
RLR32C2670%&	267	1	F	S	P, R	DAL
RLR32C2700%&	270	1	G	S	P, R	DAL
RLR32C2740%&	274	1	F	S	P, R	DAL
RLR32C2800%&	280	1	F	S	P, R	DAL
RLR32C2870%&	287	1	F	S	P, R	DAL
RLR32C2940%&	294	1	F	S	P, R	DAL
RLR32C3000%&	300	1	G	S	P, R	DAL
RLR32C3010%&	301	1	F	S	P, R	DAL
	Resistance	Power	Resistance	Level 1	Level 2	
Part Number	Value (Ohms)	Rating (W)	Tolerance (%)	(FRL)(&)	(FRL)(&)	Manufacturer
RLR32C3090%&	309	1	F	S	P, R	DAL
RLR32C3160%&	316	1	F	S	P, R	DAL
RLR32C3240%&	324	1	F	S	P, R	DAL
RLR32C3300%&	330	1	G	S	P, R	DAL
RLR32C3320%&	332	1	F	S	P, R	DAL
RLR32C3400%&	340	1	F	S	P, R	DAL
RLR32C3480%&	348	1	F	S	P, R	DAL
RLR32C3570%&	357	1	F	S	P, R	DAL
RLR32C3600%&	360	1	G	S	P, R	DAL

RLR32C3650%&	365	1	F	S	P, R	DAL
RLR32C3740%&	374	1	F	S	P, R	DAL
RLR32C3830%&	383	1	F	S	P, R	DAL
RLR32C3900%&	390	1	G	S	P, R	DAL
RLR32C3920%&	392	1	F	S	P, R	DAL
	Resistance	Power	Resistance	Level 1	Level 2	
Part Number	Value (Ohms)	Rating (W)	Tolerance (%)	(FRL)(&)	(FRL)(&)	Manufacturer
RLR32C4020%&	402	1	F	S	P, R	DAL
RLR32C4120%&	412	1	F	S	P, R	DAL
RLR32C4220%&	422	1	F	S	P, R	DAL
RLR32C4300%&	430	1	G	S	P, R	DAL
RLR32C4320%&	432	1	F	S	P, R	DAL
RLR32C4420%&	442	1	F	S	P, R	DAL
RLR32C4530%&	453	1	F	S	P, R	DAL
RLR32C4640%&	464	1	F	S	P, R	DAL
RLR32C4700%&	470	1	G	S	P, R	DAL
RLR32C4750%&	475	1	F	S	P, R	DAL
RLR32C4870%&	487	1	F	S	P, R	DAL
RLR32C4990%&	499	1	F	S	P, R	DAL
RLR32C5100%&	510	1	G	S	P, R	DAL
RLR32C5110%&	511	1	F	S	P, R	DAL
	Resistance	Power	Resistance	Level 1	Level 2	
Part Number	Value (Ohms)	Rating (W)	Tolerance (%)	(FRL)(&)	(FRL)(&)	Manufacturer
RLR32C5230%&	523	1	F	S	P, R	DAL
RLR32C5360%&	536	1	F	S	P, R	DAL
RLR32C5490%&	549	1	F	S	P, R	DAL
RLR32C5600%&	560	1	G	S	P, R	DAL
RLR32C5620%&	562	1	F	S	P, R	DAL
RLR32C5760%&	576	1	F	S	P, R	DAL
RLR32C5900%&	590	1	F	S	P, R	DAL
RLR32C6040%&	604	1	F	S	P, R	DAL
RLR32C6190%&	619	1	F	S	P, R	DAL
RLR32C6200%&	620	1	G	S	P, R	DAL
RLR32C6340%&	634	1	F	S	P, R	DAL
RLR32C6490%&	649	1	F	S	P, R	DAL
RLR32C6650%&	665	1	F	S	P, R	DAL
RLR32C6800%&	680	1	G	S	P, R	DAL
	Resistance	Power	Resistance	Level 1	Level 2	
Part Number	Value (Ohms)	Rating (W)	Tolerance (%)	(FRL)(&)	(FRL)(&)	Manufacturer
RLR32C6810%&	681	1	F	S	P, R	DAL
RLR32C6980%&	698	1	F	S	P, R	DAL
RLR32C7150%&	715	1	F	S	P, R	DAL
RLR32C7320%&	732	1	F	S	P, R	DAL
RLR32C7500%&	750	1	F	S	P, R	DAL
RLR32C7680%&	768	1	F	S	P, R	DAL
RLR32C7870%&	787	1	F	S	P, R	DAL
RLR32C8060%&	806	1	F	S	P, R	DAL

RLR32C8200%&	820	1	G	S	P, R	DAL
RLR32C8250%&	825	1	F	S	P, R	DAL
RLR32C8450%&	845	1	F	S	P, R	DAL
RLR32C8670%&	867	1	F	S	P, R	DAL
RLR32C8870%&	887	1	F	S	P, R	DAL
RLR32C9090%&	909	1	F	S	P, R	DAL
	Resistance	Power	Resistance	Level 1	Level 2	
Part Number	Value (Ohms)	Rating (W)	Tolerance (%)	(FRL)(&)	(FRL)(&)	Manufacturer
RLR32C9100%&	910	1	G	S	P, R	DAL
RLR32C9310%&	931	1	F	S	P, R	DAL
RLR32C9530%&	953	1	F	S	P, R	DAL
RLR32C9760%&	976	1	F	S	P, R	DAL

RLR32 Film Resistors: 1,000 Ohms through 9,760 Ohms

	Resistance	Power	Resistance	Level 1	Level 2	
Part Number	Value (Ohms)	Rating (W)	Tolerance (%)	(FRL)(&)	(FRL)(&)	Manufacturer
RLR32C1001%&	1,000	1	F, G	S	P, R	DAL
RLR32C1021%&	1,020	1	F	S	P, R	DAL
RLR32C1051%&	1,050	1	F	S	P, R	DAL
RLR32C1071%&	1,070	1	F	S	P, R	DAL
RLR32C1101%&	1,100	1	F, G	S	P, R	DAL
RLR32C1131%&	1,130	1	F	S	P, R	DAL
RLR32C1151%&	1,150	1	F	S	P, R	DAL
RLR32C1181%&	1,180	1	F	S	P, R	DAL
RLR32C1201%&	1,200	1	G	S	P, R	DAL
RLR32C1211%&	1,210	1	F	S	P, R	DAL
RLR32C1241%&	1,240	1	F	S	P, R	DAL
RLR32C1271%&	1,270	1	F	S	P, R	DAL
RLR32C1301%&	1,300	1	F, G	S	P, R	DAL
RLR32C1331%&	1,330	1	F	S	P, R	DAL
	Resistance	Power	Resistance	Level 1	Level 2	
Part Number	Value (Ohms)	Rating (W)	Tolerance (%)	(FRL)(&)	(FRL)(&)	Manufacturer
RLR32C1371%&	1,370	1	F	S	P, R	DAL
RLR32C1401%&	1,400	1	F	S	P, R	DAL
RLR32C1431%&	1,430	1	F	S	P, R	DAL
RLR32C1471%&	1,470	1	F	S	P, R	DAL
RLR32C1501%&	1,500	1	F, G	S	P, R	DAL
RLR32C1541%&	1,540	1	F	S	P, R	DAL
RLR32C1581%&	1,580	1	F	S	P, R	DAL
RLR32C1601%&	1,600	1	G	S	P, R	DAL
RLR32C1621%&	1,620	1	F	S	P, R	DAL
RLR32C1651%&	1,650	1	F	S	P, R	DAL
RLR32C1691%&	1,690	1	F	S	P, R	DAL
RLR32C1741%&	1,740	1	F	S	P, R	DAL

RLR32C1781%&	1,780	1	F	S	P, R	DAL
RLR32C1801%&	1,800	1	G	S	P, R	DAL
	Resistance	Power	Resistance	Level 1	Level 2	
Part Number	Value (Ohms)	Rating (W)	Tolerance (%)	(FRL)(&)	(FRL)(&)	Manufacturer
RLR32C1821%&	1,820	1	F	S	P, R	DAL
RLR32C1871%&	1,870	1	F	S	P, R	DAL
RLR32C1911%&	1,910	1	F	S	P, R	DAL
RLR32C1961%&	1,960	1	F	S	P, R	DAL
RLR32C2001%&	2,000	1	F, G	S	P, R	DAL
RLR32C2051%&	2,050	1	F	S	P, R	DAL
RLR32C2101%&	2,100	1	F	S	P, R	DAL
RLR32C2151%&	2,150	1	F	S	P, R	DAL
RLR32C2201%&	2,200	1	G	S	P, R	DAL
RLR32C2211%&	2,210	1	F	S	P, R	DAL
RLR32C2261%&	2,260	1	F	S	P, R	DAL
RLR32C2321%&	2,320	1	F	S	P, R	DAL
RLR32C2371%&	2,370	1	F	S	P, R	DAL
RLR32C2401%&	2,400	1	G	S	P, R	DAL
	Resistance	Power	Resistance	Level 1	Level 2	
Part Number	Value (Ohms)	Rating (W)	Tolerance (%)	(FRL)(&)	(FRL)(&)	Manufacturer
RLR32C2431%&	2,430	1	F	S	P, R	DAL
RLR32C2491%&	2,490	1	F	S	P, R	DAL
RLR32C2551%&	2,550	1	F	S	P, R	DAL
RLR32C2611%&	2,610	1	F	S	P, R	DAL
RLR32C2671%&	2,670	1	F	S	P, R	DAL
RLR32C2701%&	2,700	1	G	S	P, R	DAL
RLR32C2741%&	2,740	1	F	S	P, R	DAL
RLR32C2801%&	2,800	1	F	S	P, R	DAL
RLR32C2871%&	2,870	1	F	S	P, R	DAL
RLR32C2941%&	2,940	1	F	S	P, R	DAL
RLR32C3001%&	3,000	1	G	S	P, R	DAL
RLR32C3011%&	3,010	1	F	S	P, R	DAL
	Resistance	Power	Resistance	Level 1	Level 2	
Part Number	Value (Ohms)	Rating (W)	Tolerance (%)	(FRL)(&)	(FRL)(&)	Manufacturer
RLR32C3091%&	3,090	1	F	S	P, R	DAL
RLR32C3161%&	3,160	1	F	S	P, R	DAL
RLR32C3241%&	3,240	1	F	S	P, R	DAL
RLR32C3301%&	3,300	1	G	S	P, R	DAL
RLR32C3321%&	3,320	1	F	S	P, R	DAL
RLR32C3401%&	3,400	1	F	S	P, R	DAL
RLR32C3481%&	3,480	1	F	S	P, R	DAL
RLR32C3571%&	3,570	1	F	S	P, R	DAL
RLR32C3601%&	3,600	1	G	S	P, R	DAL
RLR32C3651%&	3,650	1	F	S	P, R	DAL
RLR32C3741%&	3,740	1	F	S	P, R	DAL
RLR32C3831%&	3,830	1	F	S	P, R	DAL
RLR32C3901%&	3,900	1	G	S	P, R	DAL

RLR32C3921%&	3,920	1	F	S	P, R	DAL
	Resistance	Power	Resistance	Level 1	Level 2	
Part Number	Value (Ohms)	Rating (W)	Tolerance (%)	(FRL)(&)	(FRL)(&)	Manufacturer
RLR32C4021%&	4,020	1	F	S	P, R	DAL
RLR32C4121%&	4,120	1	F	S	P, R	DAL
RLR32C4221%&	4,220	1	F	S	P, R	DAL
RLR32C4301%&	4,300	1	G	S	P, R	DAL
RLR32C4321%&	4,320	1	F	S	P, R	DAL
RLR32C4421%&	4,420	1	F	S	P, R	DAL
RLR32C4531%&	4,530	1	F	S	P, R	DAL
RLR32C4641%&	4,640	1	F	S	P, R	DAL
RLR32C4701%&	4,700	1	G	S	P, R	DAL
RLR32C4751%&	4,750	1	F	S	P, R	DAL
RLR32C4871%&	4,870	1	F	S	P, R	DAL
RLR32C4991%&	4,990	1	F	S	P, R	DAL
RLR32C5101%&	5,100	1	G	S	P, R	DAL
RLR32C5111%&	5,110	1	F	S	P, R	DAL
	Resistance	Power	Resistance	Level 1	Level 2	
Part Number	Value (Ohms)	Rating (W)	Tolerance (%)	(FRL)(&)	(FRL)(&)	Manufacturer
RLR32C5231%&	5,230	1	F	S	P, R	DAL
RLR32C5361%&	5,360	1	F	S	P, R	DAL
RLR32C5491%&	5,490	1	F	S	P, R	DAL
RLR32C5601%&	5,600	1	G	S	P, R	DAL
RLR32C5621%&	5,620	1	F	S	P, R	DAL
RLR32C5761%&	5,760	1	F	S	P, R	DAL
RLR32C5901%&	5,900	1	F	S	P, R	DAL
RLR32C6041%&	6,040	1	F	S	P, R	DAL
RLR32C6191%&	6,190	1	F	S	P, R	DAL
RLR32C6201%&	6,200	1	G	S	P, R	DAL
RLR32C6341%&	6,340	1	F	S	P, R	DAL
RLR32C6491%&	6,490	1	F	S	P, R	DAL
RLR32C6651%&	6,650	1	F	S	P, R	DAL
RLR32C6801%&	6,800	1	G	S	P, R	DAL
	Resistance	Power	Resistance	Level 1	Level 2	
Part Number	Value (Ohms)	Rating (W)	Tolerance (%)	(FRL)(&)	(FRL)(&)	Manufacturer
RLR32C6811%&	6,810	1	F	S	P, R	DAL
RLR32C6981%&	6,980	1	F	S	P, R	DAL
RLR32C7151%&	7,150	1	F	S	P, R	DAL
RLR32C7321%&	7,320	1	F	S	P, R	DAL
RLR32C7501%&	7,500	1	F	S	P, R	DAL
RLR32C7681%&	7,680	1	F	S	P, R	DAL
RLR32C7871%&	7,870	1	F	S	P, R	DAL
RLR32C8061%&	8,060	1	F	S	P, R	DAL
RLR32C8201%&	8,200	1	G	S	P, R	DAL
RLR32C8251%&	8,250	1	F	S	P, R	DAL
RLR32C8451%&	8,450	1	F	S	P, R	DAL
RLR32C8671%&	8,670	1	F	S	P, R	DAL

RLR32C8871%&	8,870	1	F	S	P, R	DAL
RLR32C9091%&	9,090	1	F	S	P, R	DAL
	Resistance	Power	Resistance	Level 1	Level 2	
Part Number	Value (Ohms)	Rating (W)	Tolerance (%)	(FRL)(&)	(FRL)(&)	Manufacturer
RLR32C9101%&	9,100	1	G	S	P, R	DAL
RLR32C9311%&	9,310	1	F	S	P, R	DAL
RLR32C9531%&	9,530	1	F	S	P, R	DAL
RLR32C9761%&	9,760	1	F	S	P, R	DAL

RLR32 Film Resistors: 10,000 Ohms through 97,600 Ohms

	Resistance	Power	Resistance	Level 1	Level 2	
Part Number	Value (Ohms)	Rating (W)	Tolerance (%)	(FRL)(&)	(FRL)(&)	Manufacturer
RLR32C1002%&	10,000	1	F, G	S	P, R	DAL
RLR32C1022%&	10,200	1	F	S	P, R	DAL
RLR32C1052%&	10,500	1	F	S	P, R	DAL
RLR32C1072%&	10,700	1	F	S	P, R	DAL
RLR32C1102%&	11,000	1	F, G	S	P, R	DAL
RLR32C1132%&	11,300	1	F	S	P, R	DAL
RLR32C1152%&	11,500	1	F	S	P, R	DAL
RLR32C1182%&	11,800	1	F	S	P, R	DAL
RLR32C1202%&	12,000	1	G	S	P, R	DAL
RLR32C1212%&	12,100	1	F	S	P, R	DAL
RLR32C1242%&	12,400	1	F	S	P, R	DAL
RLR32C1272%&	12,700	1	F	S	P, R	DAL
RLR32C1302%&	13,000	1	F, G	S	P, R	DAL
RLR32C1332%&	13,300	1	F	S	P, R	DAL
	Resistance	Power	Resistance	Level 1	Level 2	
Part Number	Value (Ohms)	Rating (W)	Tolerance (%)	(FRL)(&)	(FRL)(&)	Manufacturer
RLR32C1372%&	13,700	1	F	S	P, R	DAL
RLR32C1402%&	14,000	1	F	S	P, R	DAL
RLR32C1432%&	14,300	1	F	S	P, R	DAL
RLR32C1472%&	14,700	1	F	S	P, R	DAL
RLR32C1502%&	15,000	1	F, G	S	P, R	DAL
RLR32C1542%&	15,400	1	F	S	P, R	DAL
RLR32C1582%&	15,800	1	F	S	P, R	DAL
RLR32C1602%&	16,000	1	G	S	P, R	DAL
RLR32C1622%&	16,200	1	F	S	P, R	DAL
RLR32C1652%&	16,500	1	F	S	P, R	DAL
RLR32C1692%&	16,900	1	F	S	P, R	DAL
RLR32C1742%&	17,400	1	F	S	P, R	DAL
RLR32C1782%&	17,800	1	F	S	P, R	DAL
RLR32C1802%&	18,000	1	G	S	P, R	DAL
	Resistance	Power	Resistance	Level 1	Level 2	
Part Number	Value (Ohms)	Rating (W)	Tolerance (%)	(FRL)(&)	(FRL)(&)	Manufacturer

RLR32C1822%&	18,200	1	F	S	P, R	DAL
RLR32C1872%&	18,700	1	F	S	P, R	DAL
RLR32C1912%&	19,100	1	F	S	P, R	DAL
RLR32C1962%&	19,600	1	F	S	P, R	DAL
RLR32C2002%&	20,000	1	F, G	S	P, R	DAL
RLR32C2052%&	20,500	1	F	S	P, R	DAL
RLR32C2102%&	21,000	1	F	S	P, R	DAL
RLR32C2152%&	21,500	1	F	S	P, R	DAL
RLR32C2202%&	22,000	1	G	S	P, R	DAL
RLR32C2212%&	22,100	1	F	S	P, R	DAL
RLR32C2262%&	22,600	1	F	S	P, R	DAL
RLR32C2322%&	23,200	1	F	S	P, R	DAL
RLR32C2372%&	23,700	1	F	S	P, R	DAL
RLR32C2402%&	24,000	1	G	S	P, R	DAL
	Resistance	Power	Resistance	Level 1	Level 2	
Part Number	Value (Ohms)	Rating (W)	Tolerance (%)	(FRL)(&)	(FRL)(&)	Manufacturer
RLR32C2432%&	24,300	1	F	S	P, R	DAL
RLR32C2492%&	24,900	1	F	S	P, R	DAL
RLR32C2552%&	25,500	1	F	S	P, R	DAL
RLR32C2612%&	26,100	1	F	S	P, R	DAL
RLR32C2672%&	26,700	1	F	S	P, R	DAL
RLR32C2702%&	27,000	1	G	S	P, R	DAL
RLR32C2742%&	27,400	1	F	S	P, R	DAL
RLR32C2802%&	28,000	1	F	S	P, R	DAL
RLR32C2872%&	28,700	1	F	S	P, R	DAL
RLR32C2942%&	29,400	1	F	S	P, R	DAL
RLR32C3002%&	30,000	1	G	S	P, R	DAL
RLR32C3012%&	30,100	1	F	S	P, R	DAL
	Resistance	Power	Resistance	Level 1	Level 2	
Part Number	Value (Ohms)	Rating (W)	Tolerance (%)	(FRL)(&)	(FRL)(&)	Manufacturer
RLR32C3092%&	30,900	1	F	S	P, R	DAL
RLR32C3162%&	31,600	1	F	S	P, R	DAL
RLR32C3242%&	32,400	1	F	S	P, R	DAL
RLR32C3302%&	33,000	1	G	S	P, R	DAL
RLR32C3322%&	33,200	1	F	S	P, R	DAL
RLR32C3402%&	34,000	1	F	S	P, R	DAL
RLR32C3482%&	34,800	1	F	S	P, R	DAL
RLR32C3572%&	35,700	1	F	S	P, R	DAL
RLR32C3602%&	36,000	1	G	S	P, R	DAL
RLR32C3652%&	36,500	1	F	S	P, R	DAL
RLR32C3742%&	37,400	1	F	S	P, R	DAL
RLR32C3832%&	38,300	1	F	S	P, R	DAL
RLR32C3902%&	39,000	1	G	S	P, R	DAL
RLR32C3922%&	39,200	1	F	S	P, R	DAL
	Resistance	Power	Resistance	Level 1	Level 2	
Part Number	Value (Ohms)	Rating (W)	Tolerance (%)	(FRL)(&)	(FRL)(&)	Manufacturer
RLR32C4022%&	40,200	1	F	S	P, R	DAL

RLR32C4122%&	41,200	1	F	S	P, R	DAL
RLR32C4222%&	42,200	1	F	S	P, R	DAL
RLR32C4302%&	43,000	1	G	S	P, R	DAL
RLR32C4322%&	43,200	1	F	S	P, R	DAL
RLR32C4422%&	44,200	1	F	S	P, R	DAL
RLR32C4532%&	45,300	1	F	S	P, R	DAL
RLR32C4642%&	46,400	1	F	S	P, R	DAL
RLR32C4702%&	47,000	1	G	S	P, R	DAL
RLR32C4752%&	47,500	1	F	S	P, R	DAL
RLR32C4872%&	48,700	1	F	S	P, R	DAL
RLR32C4992%&	49,900	1	F	S	P, R	DAL
RLR32C5102%&	51,000	1	G	S	P, R	DAL
RLR32C5112%&	51,100	1	F	S	P, R	DAL
	Resistance	Power	Resistance	Level 1	Level 2	
Part Number	Value (Ohms)	Rating (W)	Tolerance (%)	(FRL)(&)	(FRL)(&)	Manufacturer
RLR32C5232%&	52,300	1	F	S	P, R	DAL
RLR32C5362%&	53,600	1	F	S	P, R	DAL
RLR32C5492%&	54,900	1	F	S	P, R	DAL
RLR32C5602%&	56,000	1	G	S	P, R	DAL
RLR32C5622%&	56,200	1	F	S	P, R	DAL
RLR32C5762%&	57,600	1	F	S	P, R	DAL
RLR32C5902%&	59,000	1	F	S	P, R	DAL
RLR32C6042%&	60,400	1	F	S	P, R	DAL
RLR32C6192%&	61,900	1	F	S	P, R	DAL
RLR32C6202%&	62,000	1	G	S	P, R	DAL
RLR32C6342%&	63,400	1	F	S	P, R	DAL
RLR32C6492%&	64,900	1	F	S	P, R	DAL
RLR32C6652%&	66,500	1	F	S	P, R	DAL
RLR32C6802%&	68,000	1	G	S	P, R	DAL
	Resistance	Power	Resistance	Level 1	Level 2	
Part Number	Value (Ohms)	Rating (W)	Tolerance (%)	(FRL)(&)	(FRL)(&)	Manufacturer
RLR32C6812%&	68,100	1	F	S	P, R	DAL
RLR32C6982%&	69,800	1	F	S	P, R	DAL
RLR32C7152%&	71,500	1	F	S	P, R	DAL
RLR32C7322%&	73,200	1	F	S	P, R	DAL
RLR32C7502%&	75,000	1	F	S	P, R	DAL
RLR32C7682%&	76,800	1	F	S	P, R	DAL
RLR32C7872%&	78,700	1	F	S	P, R	DAL
RLR32C8062%&	80,600	1	F	S	P, R	DAL
RLR32C8202%&	82,000	1	G	S	P, R	DAL
RLR32C8252%&	82,500	1	F	S	P, R	DAL
RLR32C8452%&	84,500	1	F	S	P, R	DAL
RLR32C8672%&	86,700	1	F	S	P, R	DAL
RLR32C8872%&	88,700	1	F	S	P, R	DAL
RLR32C9092%&	90,900	1	F	S	P, R	DAL
	Resistance	Power	Resistance	Level 1	Level 2	
Part Number	Value (Ohms)	Rating (W)	Tolerance (%)	(FRL)(&)	(FRL)(&)	Manufacturer

RLR32C9102%&	91,000	1	G	S	P, R	DAL
RLR32C9312%&	93,100	1	F	S	P, R	DAL
RLR32C9532%&	95,300	1	F	S	P, R	DAL
RLR32C9762%&	97,600	1	F	S	P, R	DAL

RLR32 Film Resistors: 100,000 Ohms through 976,000 Ohms

	Resistance	Power	Resistance	Level 1	Level 2	
Part Number	Value (Ohms)	Rating (W)	Tolerance (%)	(FRL)(&)	(FRL)(&)	Manufacturer
RLR32C1003%&	100,000	1	F, G	S	P, R	DAL
RLR32C1023%&	102,000	1	F	S	P, R	DAL
RLR32C1053%&	105,000	1	F	S	P, R	DAL
RLR32C1073%&	107,000	1	F	S	P, R	DAL
RLR32C1103%&	110,000	1	F, G	S	P, R	DAL
RLR32C1133%&	113,000	1	F	S	P, R	DAL
RLR32C1153%&	115,000	1	F	S	P, R	DAL
RLR32C1183%&	118,000	1	F	S	P, R	DAL
RLR32C1203%&	120,000	1	G	S	P, R	DAL
RLR32C1213%&	121,000	1	F	S	P, R	DAL
RLR32C1243%&	124,000	1	F	S	P, R	DAL
RLR32C1273%&	127,000	1	F	S	P, R	DAL
RLR32C1303%&	130,000	1	F, G	S	P, R	DAL
RLR32C1333%&	133,000	1	F	S	P, R	DAL
	Resistance	Power	Resistance	Level 1	Level 2	
Part Number	Value (Ohms)	Rating (W)	Tolerance (%)	(FRL)(&)	(FRL)(&)	Manufacturer
RLR32C1373%&	137,000	1	F	S	P, R	DAL
RLR32C1403%&	140,000	1	F	S	P, R	DAL
RLR32C1433%&	143,000	1	F	S	P, R	DAL
RLR32C1473%&	147,000	1	F	S	P, R	DAL
RLR32C1503%&	150,000	1	F, G	S	P, R	DAL
RLR32C1543%&	154,000	1	F	S	P, R	DAL
RLR32C1583%&	158,000	1	F	S	P, R	DAL
RLR32C1603%&	160,000	1	G	S	P, R	DAL
RLR32C1623%&	162,000	1	F	S	P, R	DAL
RLR32C1653%&	165,000	1	F	S	P, R	DAL
RLR32C1693%&	169,000	1	F	S	P, R	DAL
RLR32C1743%&	174,000	1	F	S	P, R	DAL
RLR32C1783%&	178,000	1	F	S	P, R	DAL
RLR32C1803%&	180,000	1	G	S	P, R	DAL
	Resistance	Power	Resistance	Level 1	Level 2	
Part Number	Value (Ohms)	Rating (W)	Tolerance (%)	(FRL)(&)	(FRL)(&)	Manufacturer
RLR32C1823%&	182,000	1	F	S	P, R	DAL
RLR32C1873%&	187,000	1	F	S	P, R	DAL
RLR32C1913%&	191,000	1	F	S	P, R	DAL
RLR32C1963%&	196,000	1	F	S	P, R	DAL

RLR32C2003%&	200,000	1	F, G	S	P, R	DAL
RLR32C2053%&	205,000	1	F	S	P, R	DAL
RLR32C2103%&	210,000	1	F	S	P, R	DAL
RLR32C2153%&	215,000	1	F	S	P, R	DAL
RLR32C2203%&	220,000	1	G	S	P, R	DAL
RLR32C2213%&	221,000	1	F	S	P, R	DAL
RLR32C2263%&	226,000	1	F	S	P, R	DAL
RLR32C2323%&	232,000	1	F	S	P, R	DAL
RLR32C2373%&	237,000	1	F	S	P, R	DAL
RLR32C2403%&	240,000	1	G	S	P, R	DAL
	Resistance	Power	Resistance	Level 1	Level 2	
Part Number	Value (Ohms)	Rating (W)	Tolerance (%)	(FRL)(&)	(FRL)(&)	Manufacturer
RLR32C2433%&	243,000	1	F	S	P, R	DAL
RLR32C2493%&	249,000	1	F	S	P, R	DAL
RLR32C2553%&	255,000	1	F	S	P, R	DAL
RLR32C2613%&	261,000	1	F	S	P, R	DAL
RLR32C2673%&	267,000	1	F	S	P, R	DAL
RLR32C2703%&	270,000	1	G	S	P, R	DAL
RLR32C2743%&	274,000	1	F	S	P, R	DAL
RLR32C2803%&	280,000	1	F	S	P, R	DAL
RLR32C2873%&	287,000	1	F	S	P, R	DAL
RLR32C2943%&	294,000	1	F	S	P, R	DAL
RLR32C3003%&	300,000	1	G	S	P, R	DAL
RLR32C3013%&	301,000	1	F	S	P, R	DAL
	Resistance	Power	Resistance	Level 1	Level 2	
Part Number	Value (Ohms)	Rating (W)	Tolerance (%)	(FRL)(&)	(FRL)(&)	Manufacturer
RLR32C3093%&	309,000	1	F	S	P, R	DAL
RLR32C3163%&	316,000	1	F	S	P, R	DAL
RLR32C3243%&	324,000	1	F	S	P, R	DAL
RLR32C3303%&	330,000	1	G	S	P, R	DAL
RLR32C3323%&	332,000	1	F	S	P, R	DAL
RLR32C3403%&	340,000	1	F	S	P, R	DAL
RLR32C3483%&	348,000	1	F	S	P, R	DAL
RLR32C3573%&	357,000	1	F	S	P, R	DAL
RLR32C3603%&	360,000	1	G	S	P, R	DAL
RLR32C3653%&	365,000	1	F	S	P, R	DAL
RLR32C3743%&	374,000	1	F	S	P, R	DAL
RLR32C3833%&	383,000	1	F	S	P, R	DAL
RLR32C3903%&	390,000	1	G	S	P, R	DAL
RLR32C3923%&	392,000	1	F	S	P, R	DAL
	Resistance	Power	Resistance	Level 1	Level 2	
Part Number	Value (Ohms)	Rating (W)	Tolerance (%)	(FRL)(&)	(FRL)(&)	Manufacturer
RLR32C4023%&	402,000	1	F	S	P, R	DAL
RLR32C4123%&	412,000	1	F	S	P, R	DAL
RLR32C4223%&	422,000	1	F	S	P, R	DAL
RLR32C4303%&	430,000	1	G	S	P, R	DAL
RLR32C4323%&	432,000	1	F	S	P, R	DAL

RLR32C4423%&	442,000	1	F	S	P, R	DAL
RLR32C4533%&	453,000	1	F	S	P, R	DAL
RLR32C4643%&	464,000	1	F	S	P, R	DAL
RLR32C4703%&	470,000	1	G	S	P, R	DAL
RLR32C4753%&	475,000	1	F	S	P, R	DAL
RLR32C4873%&	487,000	1	F	S	P, R	DAL
RLR32C4993%&	499,000	1	F	S	P, R	DAL
RLR32C5103%&	510,000	1	G	S	P, R	DAL
RLR32C5113%&	511,000	1	F	S	P, R	DAL
	Resistance	Power	Resistance	Level 1	Level 2	
Part Number	Value (Ohms)	Rating (W)	Tolerance (%)	(FRL)(&)	(FRL)(&)	Manufacturer
RLR32C5233%&	523,000	1	F	S	P, R	DAL
RLR32C5363%&	536,000	1	F	S	P, R	DAL
RLR32C5493%&	549,000	1	F	S	P, R	DAL
RLR32C5603%&	560,000	1	G	S	P, R	DAL
RLR32C5623%&	562,000	1	F	S	P, R	DAL
RLR32C5763%&	576,000	1	F	S	P, R	DAL
RLR32C5903%&	590,000	1	F	S	P, R	DAL
RLR32C6043%&	604,000	1	F	S	P, R	DAL
RLR32C6193%&	619,000	1	F	S	P, R	DAL
RLR32C6203%&	620,000	1	G	S	P, R	DAL
RLR32C6343%&	634,000	1	F	S	P, R	DAL
RLR32C6493%&	649,000	1	F	S	P, R	DAL
RLR32C6653%&	665,000	1	F	S	P, R	DAL
RLR32C6803%&	680,000	1	G	S	P, R	DAL
	Resistance	Power	Resistance	Level 1	Level 2	
Part Number	Value (Ohms)	Rating (W)	Tolerance (%)	(FRL)(&)	(FRL)(&)	Manufacturer
RLR32C6813%&	681,000	1	F	S	P, R	DAL
RLR32C6983%&	698,000	1	F	S	P, R	DAL
RLR32C7153%&	715,000	1	F	S	P, R	DAL
RLR32C7323%&	732,000	1	F	S	P, R	DAL
RLR32C7503%&	750,000	1	F	S	P, R	DAL
RLR32C7683%&	768,000	1	F	S	P, R	DAL
RLR32C7873%&	787,000	1	F	S	P, R	DAL
RLR32C8063%&	806,000	1	F	S	P, R	DAL
RLR32C8203%&	820,000	1	G	S	P, R	DAL
RLR32C8253%&	825,000	1	F	S	P, R	DAL
RLR32C8453%&	845,000	1	F	S	P, R	DAL
RLR32C8673%&	867,000	1	F	S	P, R	DAL
RLR32C8873%&	887,000	1	F	S	P, R	DAL
RLR32C9093%&	909,000	1	F	S	P, R	DAL
	Resistance	Power	Resistance	Level 1	Level 2	
Part Number	Value (Ohms)	Rating (W)	Tolerance (%)	(FRL)(&)	(FRL)(&)	Manufacturer
RLR32C9103%&	910,000	1	G	S	P, R	DAL
RLR32C9313%&	931,000	1	F	S	P, R	DAL
RLR32C9533%&	953,000	1	F	S	P, R	DAL
RLR32C9763%&	976,000	1	F	S	P, R	DAL

RLR32 Film Resistors: 1,000,000 Ohms through 2,700,000 Ohms

	Resistance	Power	Resistance	Level 1	Level 2	
Part Number	Value (Ohms)	Rating (W)	Tolerance (%)	(FRL)(&)	(FRL)(&)	Manufacturer
RLR32C1004%&	1,000,000	1	F, G	S	P, R	DAL
RLR32C1024%&	1,020,000	1	F	S	P, R	-
RLR32C1054%&	1,050,000	1	F	S	P, R	-
RLR32C1074%&	1,070,000	1	F	S	P, R	-
RLR32C1104%&	1,100,000	1	F, G	S	P, R	-
RLR32C1134%&	1,130,000	1	F	S	P, R	-
RLR32C1154%&	1,150,000	1	F	S	P, R	-
RLR32C1184%&	1,180,000	1	F	S	P, R	-
RLR32C1204%&	1,200,000	1	G	S	P, R	-
RLR32C1214%&	1,210,000	1	F	S	P, R	-
RLR32C1244%&	1,240,000	1	F	S	P, R	-
RLR32C1274%&	1,270,000	1	F	S	P, R	-
RLR32C1304%&	1,300,000	1	F, G	S	P, R	-
RLR32C1334%&	1,330,000	1	F	S	P, R	-
	Resistance	Power	Resistance	Level 1	Level 2	
Part Number	Value (Ohms)	Rating (W)	Tolerance (%)	(FRL)(&)	(FRL)(&)	Manufacturer
RLR32C1374%&	1,370,000	1	F	S	P, R	-
RLR32C1404%&	1,400,000	1	F	S	P, R	-
RLR32C1434%&	1,430,000	1	F	S	P, R	-
RLR32C1474%&	1,470,000	1	F	S	P, R	-
RLR32C1504%&	1,500,000	1	F, G	S	P, R	-
RLR32C1544%&	1,540,000	1	F	S	P, R	-
RLR32C1584%&	1,580,000	1	F	S	P, R	-
RLR32C1604%&	1,600,000	1	G	S	P, R	-
RLR32C1624%&	1,620,000	1	F	S	P, R	-
RLR32C1654%&	1,650,000	1	F	S	P, R	-
RLR32C1694%&	1,690,000	1	F	S	P, R	-
RLR32C1744%&	1,740,000	1	F	S	P, R	-
RLR32C1784%&	1,780,000	1	F	S	P, R	-
RLR32C1804%&	1,800,000	1	G	S	P, R	-
	Resistance	Power	Resistance	Level 1	Level 2	
Part Number	Value (Ohms)	Rating (W)	Tolerance (%)	(FRL)(&)	(FRL)(&)	Manufacturer
RLR32C1824%&	1,820,000	1	F	S	P, R	-
RLR32C1874%&	1,870,000	1	F	S	P, R	-
RLR32C1914%&	1,910,000	1	F	S	P, R	-
RLR32C1964%&	1,960,000	1	F	S	P, R	-
RLR32C2004%&	2,000,000	1	F, G	S	P, R	-
RLR32C2054%&	2,050,000	1	F	S	P, R	-
RLR32C2104%&	2,100,000	1	F	S	P, R	-
RLR32C2154%&	2,150,000	1	F	S	P, R	-

RLR32C2204%&	2,200,000	1	G	S	P, R	-
RLR32C2214%&	2,210,000	1	F	S	P, R	-
RLR32C2264%&	2,260,000	1	F	S	P, R	-
RLR32C2324%&	2,320,000	1	F	S	P, R	-
RLR32C2374%&	2,370,000	1	F	S	P, R	-
RLR32C2404%&	2,400,000	1	G	S	P, R	-
	Resistance	Power	Resistance	Level 1	Level 2	
Part Number	Value (Ohms)	Rating (W)	Tolerance (%)	(FRL)(&)	(FRL)(&)	Manufacturer
RLR32C2434%&	2,430,000	1	F	S	P, R	-
RLR32C2494%&	2,490,000	1	F	S	P, R	-
RLR32C2554%&	2,550,000	1	F	S	P, R	-
RLR32C2614%&	2,610,000	1	F	S	P, R	-
RLR32C2674%&	2,670,000	1	F	S	P, R	-
RLR32C2704%&	2,700,000	1	G	S	P, R	-

Physical Dimensions Table

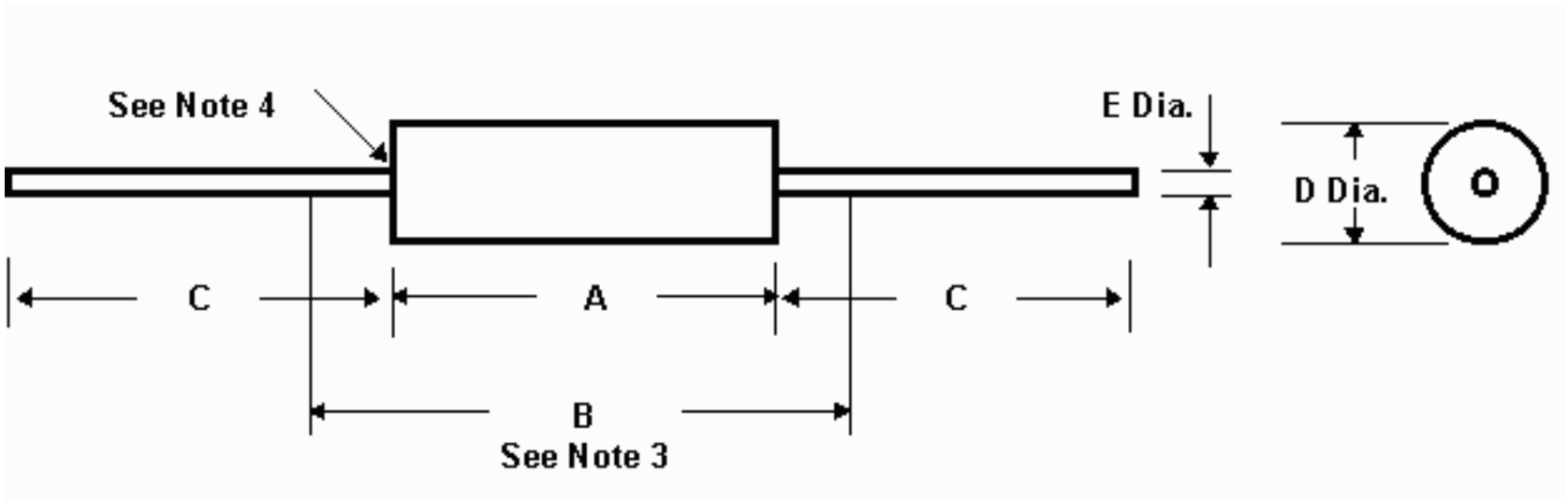

Resistor Style	A	B (max)	C	D	E
RLR05	0.150+/-0.020	0.187	1.250+/-0.266	0.066+/-0.008	0.016+/-0.002
RLR07	0.250+0.031, -0.046	0.300	1.500+/-0.125	0.090+/-0.008	0.025+/-0.002
RLR20	0.375+0.041, -0.115	0.450	1.500+/-0.125	0.138+0.023, -0.040	0.032+/-0.002

RLR32	0.562+0.031, -0.042	0.625	1.500+/-0.125	0.190+/-0.015	0.040+0.002, -0.009

NOTES:

1. Dimensions are in inches.
2. Metric equivalents are given for general information only.
3. The maximum length is "clean lead" to "clean lead".
4. The end of the body shall be the point at which the body diameter equals the nearest drill size larger than 250% of the nominal lead diameter.
5. Lead length for new design and tape and reel packaging shall be 1.00" + 0.625", -0.0".
6. Lead concentric tolerance is to be measured at the point of lead egress from the resistor body.

RLR05 Film Resistors: 100 Ohms through 976 Ohms

	Resistance

Power

Resistance

Level 1

Level 2

Part Number

Value (Ohms)

Rating (W)

Tolerance (%)

(FRL)()

(FRL)()

Manufacturer

APPLICATION NOTES FOR MIL-PRF-55182

1) IMPORTANT! MIL-PRF-55182 has inactivated for new design characteristics C and E (hermetic styles) when used in conjunction with terminal type C (solderable/weldable) only. Characteristics C and E can still be procured with terminal type R (solderable) and type N (weldable). Similarly, MIL-PRF-55182 has inactivated characteristics H, J, and K (non-hermetic styles) when used in conjunction with terminal type R. Characteristics H, J, and K can still be procured with terminal type C and type N.

** Hermetic resistors (Characteristics C and E) for the MIL-PRF-55182 styles listed in the NPSL are currently only available from Angstrohm. Previously, Vamistor was a qualified source, but they have dropped their QPL status and are no longer supplying the resistor styles covered in this section of the NPSL.

2) Space Level Product: MIL-PRF-55182 includes a Space Level Quality option designated by the letter "T" in the failure rate level character of the part number. "T" level product receives additional screening and inspection at the manufacturer prior to delivery. This inspection includes additional testing beyond the basic requirements, specifically

Power Conditioning

Resistance Noise

Lot Sample Destructive Physical Analysis

In addition, suppliers are required to maintain "S" failure rate level, qualify product through 100 thermal cycles and certify that their product meets the outgassing requirements of NASA Publication 1124. Consult with the supplier to determine their current "T" level qualification status.

3) For RNC90Y resistors any resistance value may be ordered within the ranges listed in the selection list tables. However, it is preferred that resistance values be selected from the standard decade values shown in the listings herein.

4) RNC90Y resistors should ONLY be used in applications where their particular characteristics of

Tight temperature coefficient

Minimal resistance drift over time

Precision

High power rating for package density

are ABSOLUTELY necessary. There are known reliability concerns with these resistors resulting from the difficulty making robust connections to the thin nichrome foil used in their construction.

5) A qualified source exists for RNC90Y resistors up to 121 kohms. However, RNC90Y values above 100 kohms are not suggested for space flight use. The thin foils required for values above 100 kohms and the complexity of the grid line pattern in the resistive foil make resistors with these high values difficult to produce with a reliability satisfactory for space flight applications. MIL-PRF-55182/9 does not include values below 4.99 ohms. There are no known additional risks associated with the construction of parts below 4.99 ohms, however, long term reliability test data is not maintained for these values.

6) All styles of MIL-PRF-55182 resistors are sensitive to Electrostatic Discharges (ESD) except for RNC90Y.

Part Number Ordering Information, example and explanation:

RNC55J1001FS where,

RNC	55	J	1001
Style and Termination Type (Fixed, Film, Established Reliability Resistors Conforming to MIL-R-55182)	Shape, Dimensions, Power Rating of the Resistor	Characteristic	Resistance Value (Ohms) Note: RNC90Y re

Part number ordering options are developed using the following criteria:

Style	Detail Specification
RN^50	MIL-PRF-55182/7
RN^55	MIL-PRF-55182/1
RN^60	MIL-PRF-55182/3
RN^65	MIL-PRF-55182/5
RN^70	MIL-PRF-55182/6
RNC90Y	MIL-PRF-55182/9

Terminal Type
C = Solderable/Weldable (Type C31, C32, or C52 of MIL-STD-1276)
N = Weldable (Type N22 of MIL-STD-1276)
R = Solderable

Hermetically Sealed
C
E

Nonhermetically Sealed	
H	J

K

Y

(RNC90 style only)

Resistance Temperature Characteristic (Referenced to +25deg.C)
+/-50 parts per million/deg.C
+/-25 parts per million/deg.C
+/-100 parts per million/deg.C
+/-5 parts per million/deg.C up to +125deg.C +/-10 parts per million/deg.C from +125deg.C to +175deg.C

Resistance Tolerance
V = +/- 0.005%
T = +/- 0.01%
A = +/- 0.05%
B = +/- 0.1%
D = +/- 0.5%
F = +/- 1.0%

Failure Rate Level
P = 0.1%/1000 hrs (Level 2)
R = 0.01%/1000 hrs (Level 2)
S = 0.001%/1000 hrs (Level 1)
T = Space Level (See Application Notes)

Resistance Values:

For all styles except RNC90Y resistance values in ohms are identified by four characters. The first three digits represent significant figures and the last digit specifies the number of zeroes to follow. For example 1001 indicates 1,000 ohms and 1002 indicates 10,000 ohms. For values less than or equal to 100 ohms the letter "R" is used to indicate a decimal point. For example 10R0 indicates 10.0 ohms.

RNC90Y resistance values in ohms are identified by six characters consisting of five digits and a letter. The letter is used simultaneously as a decimal point and as a multiplier. For resistance values:

a. Greater than or equal to 1 ohm but less than 1,000 ohms, the letter "R" is used to represent a decimal point.

b. Greater than or equal to 1,000 ohms but less than 1 megohm, the letter "K" is used to represent a decimal point.

Also, it is possible to order RNC90Y resistors with tolerance V, T, A, or B with any resistance value within the minimum and maximum values shown in the tables herein. However, it is preferred that values be chosen from the standard values shown in the tables.

08/06/02	Corrected typos shown in part numbers listed in the 1kohm to 10 kohm decade table listing Added Wilbrecht Electronics Corp as an available source of supply Delected "S" failure rate level from RNC90Y p
07/27/98	Corrected application note to indicate that RNC90Y is available up to 121 kohms. However, values above 100 kohms are not recommended for spaceflight applications . Added application note warning
03/02/98	Added dimensional drawings to this section.
02/26/98	Removed Vamistor from the list of available sources. In accordance with QPL-55182-138, Vamistor is no longer a qualified source for the MIL-PRF-55182 resistor styles listed in the NPSL.
02/05/98	Added description of the "Y" temperature characteristic to the part number explanation page.
01/13/98	Added application note about the lack of availability of RNC90Y parts above 100 kohms and below 4.99 ohms.
12/11/97	Added application notes for RNC90Y: ability to order any resistance value and caution about reliability concerns with this device type.
09/30/97	Added part selection tables for the RNC90Y style resistor along with part number ordering information for this style Made changes indicating the specification conversion to a performance specific
07/01/97	Initial Release of MIL-R-55182 Section in the NPSL

Go to -
NEPP
|
NPSL
|
Resistors
MIL-PRF-55182, RESISTORS
Fixed, Resistor, Film, (Insulated), Established Reliability
RN Styles
Part Number/Ordering Explanation
Important! Application Notes
Revision History for MIL-PRF-55182 Listing in the NPSL
Last Revision: 08/06/02
Click on the link below to see the associated parts selection listing:

Style	Detail Specification	Description (Length x Diameter) [Click on the Link below for Outline Drawings]
RN^50	MIL-PRF-55182/7	1/20 Watt, Tubular, Axial Lead (0.225" x 0.065") 10 ohms to 796 kohms
RN^55	MIL-PRF-55182/1	1/10 Watt, Tubular, Axial Lead (0.250" x 0.109") 10 ohms to 2 Mohms
RN^60	MIL-PRF-55182/3	1/8 Watt, Tubular, Axial Lead (0.375" x 0.125") 10 ohms to 2.49 Mohms
RN^65	MIL-PRF-55182/5	1/4 Watt, Tubular, Axial Lead (0.625" x 0.188") 10 ohms to 4.99 Mohms
RN^70	MIL-PRF-55182/6	1/2 Watt, Tubular, Axial Lead (0.750" x 0.250") 10 ohms to 4.99 Mohms
RNC90Y Caution: See App Notes	MIL-PRF-55182/9	0.3 Watt, Rectangular, Radial Lead (0.336" x 0.310") 4.99 ohms to 100 kohms

RN^50 Film Resistors

	Resistance	Power	Term.	Char.	Resistance	Level 1	Level 2	
Part Number	Value (Ohms)	Rating (W)	Type (^)	(@)	Tolerance (%)	(FRL) (&)	(FRL) (&)	Manufacturer
RN^50@10R0%&	10.0	1/20	C, N	H, J, K	B, D, F	S	P, R	DAL, IRC
RN^50@10R1%&	10.1	1/20	C, N	H, J, K	B, D	S	P, R	DAL, IRC

RN^50@10R2%&	10.2	1/20	C, N	H, J, K	B, D, F	S	P, R	DAL, IRC
RN^50@10R4%&	10.4	1/20	C, N	H, J, K	B, D	S	P, R	DAL, IRC
RN^50@10R5%&	10.5	1/20	C, N	H, J, K	B, D, F	S	P, R	DAL, IRC
RN^50@10R6%&	10.6	1/20	C, N	H, J, K	B, D	S	P, R	DAL, IRC
RN^50@10R7%&	10.7	1/20	C, N	H, J, K	B, D, F	S	P, R	DAL, IRC
RN^50@10R9%&	10.9	1/20	C, N	H, J, K	B, D	S	P, R	DAL, IRC
RN^50@11R0%&	11.0	1/20	C, N	H, J, K	B, D, F	S	P, R	DAL, IRC
RN^50@11R1%&	11.1	1/20	C, N	H, J, K	B, D	S	P, R	DAL, IRC
RN^50@11R3%&	11.3	1/20	C, N	H, J, K	B, D, F	S	P, R	DAL, IRC
RN^50@11R4%&	11.4	1/20	C, N	H, J, K	B, D	S	P, R	DAL, IRC
RN^50@11R5%&	11.5	1/20	C, N	H, J, K	B, D, F	S	P, R	DAL, IRC
RN^50@11R7%&	11.7	1/20	C, N	H, J, K	B, D	S	P, R	DAL, IRC
RN^50@11R8%&	11.8	1/20	C, N	H, J, K	B, D, F	S	P, R	DAL, IRC
RN^50@12R0%&	12.0	1/20	C, N	H, J, K	B, D	S	P, R	DAL, IRC
RN^50@12R1%&	12.1	1/20	C, N	H, J, K	B, D, F	S	P, R	DAL, IRC
RN^50@12R3%&	12.3	1/20	C, N	H, J, K	B, D	S	P, R	DAL, IRC
RN^50@12R4%&	12.4	1/20	C, N	H, J, K	B, D, F	S	P, R	DAL, IRC
RN^50@12R6%&	12.6	1/20	C, N	H, J, K	B, D	S	P, R	DAL, IRC
RN^50@12R7%&	12.7	1/20	C, N	H, J, K	B, D, F	S	P, R	DAL, IRC
RN^50@12R9%&	12.9	1/20	C, N	H, J, K	B, D	S	P, R	DAL, IRC
RN^50@13R0%&	13.0	1/20	C, N	H, J, K	B, D, F	S	P, R	DAL, IRC
RN^50@13R2%&	13.2	1/20	C, N	H, J, K	B, D	S	P, R	DAL, IRC
RN^50@13R3%&	13.3	1/20	C, N	H, J, K	B, D, F	S	P, R	DAL, IRC
RN^50@13R5%&	13.5	1/20	C, N	H, J, K	B, D	S	P, R	DAL, IRC
RN^50@13R7%&	13.7	1/20	C, N	H, J, K	B, D, F	S	P, R	DAL, IRC
RN^50@13R8%&	13.8	1/20	C, N	H, J, K	B, D	S	P, R	DAL, IRC
RN^50@14R0%&	14.0	1/20	C, N	H, J, K	B, D, F	S	P, R	DAL, IRC
RN^50@14R2%&	14.2	1/20	C, N	H, J, K	B, D	S	P, R	DAL, IRC
RN^50@14R3%&	14.3	1/20	C, N	H, J, K	B, D, F	S	P, R	DAL, IRC
RN^50@14R5%&	14.5	1/20	C, N	H, J, K	B, D	S	P, R	DAL, IRC
RN^50@14R7%&	14.7	1/20	C, N	H, J, K	B, D, F	S	P, R	DAL, IRC
RN^50@14R9%&	14.9	1/20	C, N	H, J, K	B, D	S	P, R	DAL, IRC
RN^50@15R0%&	15.0	1/20	C, N	H, J, K	B, D, F	S	P, R	DAL, IRC
RN^50@15R2%&	15.2	1/20	C, N	H, J, K	B, D	S	P, R	DAL, IRC
RN^50@15R4%&	15.4	1/20	C, N	H, J, K	B, D, F	S	P, R	DAL, IRC
RN^50@15R6%&	15.6	1/20	C, N	H, J, K	B, D	S	P, R	DAL, IRC
RN^50@15R8%&	15.8	1/20	C, N	H, J, K	B, D, F	S	P, R	DAL, IRC
RN^50@16R0%&	16.0	1/20	C, N	H, J, K	B, D	S	P, R	DAL, IRC
RN^50@16R2%&	16.2	1/20	C, N	H, J, K	B, D, F	S	P, R	DAL, IRC
RN^50@16R4%&	16.4	1/20	C, N	H, J, K	B, D	S	P, R	DAL, IRC
RN^50@16R5%&	16.5	1/20	C, N	H, J, K	B, D, F	S	P, R	DAL, IRC
RN^50@16R7%&	16.7	1/20	C, N	H, J, K	B, D	S	P, R	DAL, IRC
RN^50@16R9%&	16.9	1/20	C, N	H, J, K	B, D, F	S	P, R	DAL, IRC
RN^50@17R2%&	17.2	1/20	C, N	H, J, K	B, D	S	P, R	DAL, IRC
RN^50@17R4%&	17.4	1/20	C, N	H, J, K	B, D, F	S	P, R	DAL, IRC
RN^50@17R6%&	17.6	1/20	C, N	H, J, K	B, D	S	P, R	DAL, IRC
RN^50@17R8%&	17.8	1/20	C, N	H, J, K	B, D, F	S	P, R	DAL, IRC

RN^50@18R0%&	18.0	1/20	C, N	H, J, K	B, D	S	P, R	DAL, IRC
RN^50@18R2%&	18.2	1/20	C, N	H, J, K	B, D, F	S	P, R	DAL, IRC
RN^50@18R4%&	18.4	1/20	C, N	H, J, K	B, D	S	P, R	DAL, IRC
RN^50@18R7%&	18.7	1/20	C, N	H, J, K	B, D, F	S	P, R	DAL, IRC
RN^50@18R9%&	18.9	1/20	C, N	H, J, K	B, D	S	P, R	DAL, IRC
RN^50@19R1%&	19.1	1/20	C, N	H, J, K	B, D, F	S	P, R	DAL, IRC
RN^50@19R3%&	19.3	1/20	C, N	H, J, K	B, D	S	P, R	DAL, IRC
RN^50@19R6%&	19.6	1/20	C, N	H, J, K	B, D, F	S	P, R	DAL, IRC
RN^50@19R8%&	19.8	1/20	C, N	H, J, K	B, D	S	P, R	DAL, IRC
RN^50@20R0%&	20.0	1/20	C, N	H, J, K	B, D, F	S	P, R	DAL, IRC
RN^50@20R3%&	20.3	1/20	C, N	H, J, K	B, D	S	P, R	DAL, IRC
RN^50@20R5%&	20.5	1/20	C, N	H, J, K	B, D, F	S	P, R	DAL, IRC
RN^50@20R8%&	20.8	1/20	C, N	H, J, K	B, D	S	P, R	DAL, IRC
RN^50@21R0%&	21.0	1/20	C, N	H, J, K	B, D, F	S	P, R	DAL, IRC
RN^50@21R3%&	21.3	1/20	C, N	H, J, K	B, D	S	P, R	DAL, IRC
RN^50@21R5%&	21.5	1/20	C, N	H, J, K	B, D, F	S	P, R	DAL, IRC
RN^50@21R8%&	21.8	1/20	C, N	H, J, K	B, D	S	P, R	DAL, IRC
RN^50@22R1%&	22.1	1/20	C, N	H, J, K	B, D, F	S	P, R	DAL, IRC
RN^50@22R3%&	22.3	1/20	C, N	H, J, K	B, D	S	P, R	DAL, IRC
RN^50@22R6%&	22.6	1/20	C, N	H, J, K	B, D, F	S	P, R	DAL, IRC
RN^50@22R9%&	22.9	1/20	C, N	H, J, K	B, D	S	P, R	DAL, IRC
RN^50@23R2%&	23.2	1/20	C, N	H, J, K	B, D, F	S	P, R	DAL, IRC
RN^50@23R4%&	23.4	1/20	C, N	H, J, K	B, D	S	P, R	DAL, IRC
RN^50@23R7%&	23.7	1/20	C, N	H, J, K	B, D, F	S	P, R	DAL, IRC
RN^50@24R0%&	24.0	1/20	C, N	H, J, K	B, D	S	P, R	DAL, IRC
RN^50@24R3%&	24.3	1/20	C, N	H, J, K	B, D, F	S	P, R	DAL, IRC
RN^50@24R6%&	24.6	1/20	C, N	H, J, K	B, D	S	P, R	DAL, IRC
RN^50@24R9%&	24.9	1/20	C, N	H, J, K	B, D, F	S	P, R	DAL, IRC
RN^50@25R2%&	25.2	1/20	C, N	H, J, K	B, D	S	P, R	DAL, IRC
RN^50@25R5%&	25.5	1/20	C, N	H, J, K	B, D, F	S	P, R	DAL, IRC
RN^50@25R8%&	25.8	1/20	C, N	H, J, K	B, D	S	P, R	DAL, IRC
RN^50@26R1%&	26.1	1/20	C, N	H, J, K	B, D, F	S	P, R	DAL, IRC
RN^50@26R4%&	26.4	1/20	C, N	H, J, K	B, D	S	P, R	DAL, IRC
RN^50@26R7%&	26.7	1/20	C, N	H, J, K	B, D, F	S	P, R	DAL, IRC
RN^50@27R1%&	27.1	1/20	C, N	H, J, K	B, D	S	P, R	DAL, IRC
RN^50@27R4%&	27.4	1/20	C, N	H, J, K	B, D, F	S	P, R	DAL, IRC
RN^50@27R7%&	27.7	1/20	C, N	H, J, K	B, D	S	P, R	DAL, IRC
RN^50@28R0%&	28.0	1/20	C, N	H, J, K	B, D, F	S	P, R	DAL, IRC
RN^50@28R4%&	28.4	1/20	C, N	H, J, K	B, D	S	P, R	DAL, IRC
RN^50@28R7%&	28.7	1/20	C, N	H, J, K	B, D, F	S	P, R	DAL, IRC
RN^50@29R1%&	29.1	1/20	C, N	H, J, K	B, D	S	P, R	DAL, IRC
RN^50@29R4%&	29.4	1/20	C, N	H, J, K	B, D, F	S	P, R	DAL, IRC
RN^50@29R8%&	29.8	1/20	C, N	H, J, K	B, D	S	P, R	DAL, IRC
RN^50@30R1%&	30.1	1/20	C, N	H, J, K	B, D, F	S	P, R	DAL, IRC
RN^50@30R5%&	30.5	1/20	C, N	H, J, K	B, D	S	P, R	DAL, IRC
RN^50@30R9%&	30.9	1/20	C, N	H, J, K	B, D, F	S	P, R	DAL, IRC
RN^50@31R2%&	31.2	1/20	C, N	H, J, K	B, D	S	P, R	DAL, IRC

RN^50@31R6%&	31.6	1/20	C, N	H, J, K	B, D, F	S	P, R	DAL, IRC
RN^50@32R0%&	32.0	1/20	C, N	H, J, K	B, D	S	P, R	DAL, IRC
RN^50@32R4%&	32.4	1/20	C, N	H, J, K	B, D, F	S	P, R	DAL, IRC
RN^50@32R8%&	32.8	1/20	C, N	H, J, K	B, D	S	P, R	DAL, IRC
RN^50@33R2%&	33.2	1/20	C, N	H, J, K	B, D, F	S	P, R	DAL, IRC
RN^50@33R6%&	33.6	1/20	C, N	H, J, K	B, D	S	P, R	DAL, IRC
RN^50@34R0%&	34.0	1/20	C, N	H, J, K	B, D, F	S	P, R	DAL, IRC
RN^50@34R4%&	34.4	1/20	C, N	H, J, K	B, D	S	P, R	DAL, IRC
RN^50@34R8%&	34.8	1/20	C, N	H, J, K	B, D, F	S	P, R	DAL, IRC
RN^50@35R2%&	35.2	1/20	C, N	H, J, K	B, D	S	P, R	DAL, IRC
RN^50@35R7%&	35.7	1/20	C, N	H, J, K	B, D, F	S	P, R	DAL, IRC
RN^50@36R1%&	36.1	1/20	C, N	H, J, K	B, D	S	P, R	DAL, IRC
RN^50@36R5%&	36.5	1/20	C, N	H, J, K	B, D, F	S	P, R	DAL, IRC
RN^50@37R0%&	37.0	1/20	C, N	H, J, K	B, D	S	P, R	DAL, IRC
RN^50@37R4%&	37.4	1/20	C, N	H, J, K	B, D, F	S	P, R	DAL, IRC
RN^50@37R9%&	37.9	1/20	C, N	H, J, K	B, D	S	P, R	DAL, IRC
RN^50@38R3%&	38.3	1/20	C, N	H, J, K	B, D, F	S	P, R	DAL, IRC
RN^50@38R8%&	38.8	1/20	C, N	H, J, K	B, D	S	P, R	DAL, IRC
RN^50@39R2%&	39.2	1/20	C, N	H, J, K	B, D, F	S	P, R	DAL, IRC
RN^50@39R7%&	39.7	1/20	C, N	H, J, K	B, D	S	P, R	DAL, IRC
RN^50@40R2%&	40.2	1/20	C, N	H, J, K	B, D, F	S	P, R	DAL, IRC
RN^50@40R7%&	40.7	1/20	C, N	H, J, K	B, D	S	P, R	DAL, IRC
RN^50@41R2%&	41.2	1/20	C, N	H, J, K	B, D, F	S	P, R	DAL, IRC
RN^50@41R7%&	41.7	1/20	C, N	H, J, K	B, D	S	P, R	DAL, IRC
RN^50@42R2%&	42.2	1/20	C, N	H, J, K	B, D, F	S	P, R	DAL, IRC
RN^50@42R7%&	42.7	1/20	C, N	H, J, K	B, D	S	P, R	DAL, IRC
RN^50@43R2%&	43.2	1/20	C, N	H, J, K	B, D, F	S	P, R	DAL, IRC
RN^50@43R7%&	43.7	1/20	C, N	H, J, K	B, D	S	P, R	DAL, IRC
RN^50@44R2%&	44.2	1/20	C, N	H, J, K	B, D, F	S	P, R	DAL, IRC
RN^50@44R8%&	44.8	1/20	C, N	H, J, K	B, D	S	P, R	DAL, IRC
RN^50@45R3%&	45.3	1/20	C, N	H, J, K	B, D, F	S	P, R	DAL, IRC
RN^50@45R9%&	45.9	1/20	C, N	H, J, K	B, D	S	P, R	DAL, IRC
RN^50@46R4%&	46.4	1/20	C, N	H, J, K	B, D, F	S	P, R	DAL, IRC
RN^50@47R0%&	47.0	1/20	C, N	H, J, K	B, D	S	P, R	DAL, IRC
RN^50@47R5%&	47.5	1/20	C, N	H, J, K	B, D, F	S	P, R	DAL, IRC
RN^50@48R1%&	48.1	1/20	C, N	H, J, K	B, D	S	P, R	DAL, IRC
RN^50@48R7%&	48.7	1/20	C, N	H, J, K	B, D, F	S	P, R	DAL, IRC
RN^50@49R3%&	49.3	1/20	C, N	H, J, K	B, D	S	P, R	DAL, IRC
RN^50@49R9%&	49.9	1/20	C, N	H, J, K	B, D, F	S	P, R	DAL, IRC
RN^50@50R5%&	50.5	1/20	C, N	H, J, K	B, D	S	P, R	DAL, IRC
RN^50@51R1%&	51.1	1/20	C, N	H, J, K	B, D, F	S	P, R	DAL, IRC
RN^50@51R7%&	51.7	1/20	C, N	H, J, K	B, D	S	P, R	DAL, IRC
RN^50@52R3%&	52.3	1/20	C, N	H, J, K	B, D, F	S	P, R	DAL, IRC
RN^50@53R0%&	53.0	1/20	C, N	H, J, K	B, D	S	P, R	DAL, IRC
RN^50@53R6%&	53.6	1/20	C, N	H, J, K	B, D, F	S	P, R	DAL, IRC
RN^50@54R2%&	54.2	1/20	C, N	H, J, K	B, D	S	P, R	DAL, IRC
RN^50@54R9%&	54.9	1/20	C, N	H, J, K	B, D, F	S	P, R	DAL, IRC

RN^50@55R6%&	55.6	1/20	C, N	H, J, K	B, D	S	P, R	DAL, IRC
RN^50@56R2%&	56.2	1/20	C, N	H, J, K	B, D, F	S	P, R	DAL, IRC
RN^50@56R9%&	56.9	1/20	C, N	H, J, K	B, D	S	P, R	DAL, IRC
RN^50@57R6%&	57.6	1/20	C, N	H, J, K	B, D, F	S	P, R	DAL, IRC
RN^50@58R3%&	58.3	1/20	C, N	H, J, K	B, D	S	P, R	DAL, IRC
RN^50@59R0%&	59.0	1/20	C, N	H, J, K	B, D, F	S	P, R	DAL, IRC
RN^50@59R7%&	59.7	1/20	C, N	H, J, K	B, D	S	P, R	DAL, IRC
RN^50@60R4%&	60.4	1/20	C, N	H, J, K	B, D, F	S	P, R	DAL, IRC
RN^50@61R2%&	61.2	1/20	C, N	H, J, K	B, D	S	P, R	DAL, IRC
RN^50@61R9%&	61.9	1/20	C, N	H, J, K	B, D, F	S	P, R	DAL, IRC
RN^50@62R6%&	62.6	1/20	C, N	H, J, K	B, D	S	P, R	DAL, IRC
RN^50@63R4%&	63.4	1/20	C, N	H, J, K	B, D, F	S	P, R	DAL, IRC
RN^50@64R2%&	64.2	1/20	C, N	H, J, K	B, D	S	P, R	DAL, IRC
RN^50@64R9%&	64.9	1/20	C, N	H, J, K	B, D, F	S	P, R	DAL, IRC
RN^50@65R7%&	65.7	1/20	C, N	H, J, K	B, D	S	P, R	DAL, IRC
RN^50@66R5%&	66.5	1/20	C, N	H, J, K	B, D, F	S	P, R	DAL, IRC
RN^50@67R3%&	67.3	1/20	C, N	H, J, K	B, D	S	P, R	DAL, IRC
RN^50@68R1%&	68.1	1/20	C, N	H, J, K	B, D, F	S	P, R	DAL, IRC
RN^50@69R0%&	69.0	1/20	C, N	H, J, K	B, D	S	P, R	DAL, IRC
RN^50@69R8%&	69.8	1/20	C, N	H, J, K	B, D, F	S	P, R	DAL, IRC
RN^50@70R6%&	70.6	1/20	C, N	H, J, K	B, D	S	P, R	DAL, IRC
RN^50@71R5%&	71.5	1/20	C, N	H, J, K	B, D, F	S	P, R	DAL, IRC
RN^50@72R3%&	72.3	1/20	C, N	H, J, K	B, D	S	P, R	DAL, IRC
RN^50@73R2%&	73.2	1/20	C, N	H, J, K	B, D, F	S	P, R	DAL, IRC
RN^50@74R1%&	74.1	1/20	C, N	H, J, K	B, D	S	P, R	DAL, IRC
RN^50@75R0%&	75.0	1/20	C, N	H, J, K	B, D, F	S	P, R	DAL, IRC
RN^50@75R9%&	75.9	1/20	C, N	H, J, K	B, D	S	P, R	DAL, IRC
RN^50@76R8%&	76.8	1/20	C, N	H, J, K	B, D, F	S	P, R	DAL, IRC
RN^50@77R7%&	77.7	1/20	C, N	H, J, K	B, D	S	P, R	DAL, IRC
RN^50@78R7%&	78.7	1/20	C, N	H, J, K	B, D, F	S	P, R	DAL, IRC
RN^50@79R6%&	79.6	1/20	C, N	H, J, K	B, D	S	P, R	DAL, IRC
RN^50@80R6%&	80.6	1/20	C, N	H, J, K	B, D, F	S	P, R	DAL, IRC
RN^50@81R6%&	81.6	1/20	C, N	H, J, K	B, D	S	P, R	DAL, IRC
RN^50@82R5%&	82.5	1/20	C, N	H, J, K	B, D, F	S	P, R	DAL, IRC
RN^50@83R5%&	83.5	1/20	C, N	H, J, K	B, D	S	P, R	DAL, IRC
RN^50@84R5%&	84.5	1/20	C, N	H, J, K	B, D, F	S	P, R	DAL, IRC
RN^50@85R6%&	85.6	1/20	C, N	H, J, K	B, D	S	P, R	DAL, IRC
RN^50@86R6%&	86.6	1/20	C, N	H, J, K	B, D, F	S	P, R	DAL, IRC
RN^50@87R6%&	87.6	1/20	C, N	H, J, K	B, D	S	P, R	DAL, IRC
RN^50@88R7%&	88.7	1/20	C, N	H, J, K	B, D, F	S	P, R	DAL, IRC
RN^50@89R8%&	89.8	1/20	C, N	H, J, K	B, D	S	P, R	DAL, IRC
RN^50@90R9%&	90.9	1/20	C, N	H, J, K	B, D, F	S	P, R	DAL, IRC
RN^50@92R0%&	92.0	1/20	C, N	H, J, K	B, D	S	P, R	DAL, IRC
RN^50@93R1%&	93.1	1/20	C, N	H, J, K	B, D, F	S	P, R	DAL, IRC
RN^50@94R2%&	94.2	1/20	C, N	H, J, K	B, D	S	P, R	DAL, IRC
RN^50@95R3%&	95.3	1/20	C, N	H, J, K	B, D, F	S	P, R	DAL, IRC
RN^50@96R5%&	96.5	1/20	C, N	H, J, K	B, D	S	P, R	DAL, IRC

RN^50@97R6%&	97.6	1/20	C, N	H, J, K	B, D, F	S	P, R	DAL, IRC
RN^50@98R8%&	98.8	1/20	C, N	H, J, K	B, D	S	P, R	DAL, IRC
RN^50@1000%&	100	1/20	C, N	H, J, K	B, D, F	S	P, R	DAL, IRC
RN^50@1010%&	101	1/20	C, N	H, J, K	B, D	S	P, R	DAL, IRC
RN^50@1020%&	102	1/20	C, N	H, J, K	B, D, F	S	P, R	DAL, IRC
RN^50@1040%&	104	1/20	C, N	H, J, K	B, D	S	P, R	DAL, IRC
RN^50@1050%&	105	1/20	C, N	H, J, K	B, D, F	S	P, R	DAL, IRC
RN^50@1060%&	106	1/20	C, N	H, J, K	B, D	S	P, R	DAL, IRC
RN^50@1070%&	107	1/20	C, N	H, J, K	B, D, F	S	P, R	DAL, IRC
RN^50@1090%&	109	1/20	C, N	H, J, K	B, D	S	P, R	DAL, IRC
RN^50@1100%&	110	1/20	C, N	H, J, K	B, D, F	S	P, R	DAL, IRC
RN^50@1110%&	111	1/20	C, N	H, J, K	B, D	S	P, R	DAL, IRC
RN^50@1130%&	113	1/20	C, N	H, J, K	B, D, F	S	P, R	DAL, IRC
RN^50@1140%&	114	1/20	C, N	H, J, K	B, D	S	P, R	DAL, IRC
RN^50@1150%&	115	1/20	C, N	H, J, K	B, D, F	S	P, R	DAL, IRC
RN^50@1170%&	117	1/20	C, N	H, J, K	B, D	S	P, R	DAL, IRC
RN^50@1180%&	118	1/20	C, N	H, J, K	B, D, F	S	P, R	DAL, IRC
RN^50@1200%&	120	1/20	C, N	H, J, K	B, D	S	P, R	DAL, IRC
RN^50@1210%&	121	1/20	C, N	H, J, K	B, D, F	S	P, R	DAL, IRC
RN^50@1230%&	123	1/20	C, N	H, J, K	B, D	S	P, R	DAL, IRC
RN^50@1240%&	124	1/20	C, N	H, J, K	B, D, F	S	P, R	DAL, IRC
RN^50@1260%&	126	1/20	C, N	H, J, K	B, D	S	P, R	DAL, IRC
RN^50@1270%&	127	1/20	C, N	H, J, K	B, D, F	S	P, R	DAL, IRC
RN^50@1290%&	129	1/20	C, N	H, J, K	B, D	S	P, R	DAL, IRC
RN^50@1300%&	130	1/20	C, N	H, J, K	B, D, F	S	P, R	DAL, IRC
RN^50@1320%&	132	1/20	C, N	H, J, K	B, D	S	P, R	DAL, IRC
RN^50@1330%&	133	1/20	C, N	H, J, K	B, D, F	S	P, R	DAL, IRC
RN^50@1350%&	135	1/20	C, N	H, J, K	B, D	S	P, R	DAL, IRC
RN^50@1370%&	137	1/20	C, N	H, J, K	B, D, F	S	P, R	DAL, IRC
RN^50@1380%&	138	1/20	C, N	H, J, K	B, D	S	P, R	DAL, IRC
RN^50@1400%&	140	1/20	C, N	H, J, K	B, D, F	S	P, R	DAL, IRC
RN^50@1420%&	142	1/20	C, N	H, J, K	B, D	S	P, R	DAL, IRC
RN^50@1430%&	143	1/20	C, N	H, J, K	B, D, F	S	P, R	DAL, IRC
RN^50@1450%&	145	1/20	C, N	H, J, K	B, D	S	P, R	DAL, IRC
RN^50@1470%&	147	1/20	C, N	H, J, K	B, D, F	S	P, R	DAL, IRC
RN^50@1490%&	149	1/20	C, N	H, J, K	B, D	S	P, R	DAL, IRC
RN^50@1500%&	150	1/20	C, N	H, J, K	B, D, F	S	P, R	DAL, IRC
RN^50@1520%&	152	1/20	C, N	H, J, K	B, D	S	P, R	DAL, IRC
RN^50@1540%&	154	1/20	C, N	H, J, K	B, D, F	S	P, R	DAL, IRC
RN^50@1560%&	156	1/20	C, N	H, J, K	B, D	S	P, R	DAL, IRC
RN^50@1580%&	158	1/20	C, N	H, J, K	B, D, F	S	P, R	DAL, IRC
RN^50@1600%&	160	1/20	C, N	H, J, K	B, D	S	P, R	DAL, IRC
RN^50@1620%&	162	1/20	C, N	H, J, K	B, D, F	S	P, R	DAL, IRC
RN^50@1640%&	164	1/20	C, N	H, J, K	B, D	S	P, R	DAL, IRC
RN^50@1650%&	165	1/20	C, N	H, J, K	B, D, F	S	P, R	DAL, IRC
RN^50@1670%&	167	1/20	C, N	H, J, K	B, D	S	P, R	DAL, IRC
RN^50@1690%&	169	1/20	C, N	H, J, K	B, D, F	S	P, R	DAL, IRC

RN^50@1720%&	172	1/20	C, N	H, J, K	B, D	S	P, R	DAL, IRC
RN^50@1740%&	174	1/20	C, N	H, J, K	B, D, F	S	P, R	DAL, IRC
RN^50@1760%&	176	1/20	C, N	H, J, K	B, D	S	P, R	DAL, IRC
RN^50@1780%&	178	1/20	C, N	H, J, K	B, D, F	S	P, R	DAL, IRC
RN^50@1800%&	180	1/20	C, N	H, J, K	B, D	S	P, R	DAL, IRC
RN^50@1820%&	182	1/20	C, N	H, J, K	B, D, F	S	P, R	DAL, IRC
RN^50@1840%&	184	1/20	C, N	H, J, K	B, D	S	P, R	DAL, IRC
RN^50@1870%&	187	1/20	C, N	H, J, K	B, D, F	S	P, R	DAL, IRC
RN^50@1890%&	189	1/20	C, N	H, J, K	B, D	S	P, R	DAL, IRC
RN^50@1910%&	191	1/20	C, N	H, J, K	B, D, F	S	P, R	DAL, IRC
RN^50@1930%&	193	1/20	C, N	H, J, K	B, D	S	P, R	DAL, IRC
RN^50@1960%&	196	1/20	C, N	H, J, K	B, D, F	S	P, R	DAL, IRC
RN^50@1980%&	198	1/20	C, N	H, J, K	B, D	S	P, R	DAL, IRC
RN^50@2000%&	200	1/20	C, N	H, J, K	B, D, F	S	P, R	DAL, IRC
RN^50@2030%&	203	1/20	C, N	H, J, K	B, D	S	P, R	DAL, IRC
RN^50@2050%&	205	1/20	C, N	H, J, K	B, D, F	S	P, R	DAL, IRC
RN^50@2080%&	208	1/20	C, N	H, J, K	B, D	S	P, R	DAL, IRC
RN^50@2100%&	210	1/20	C, N	H, J, K	B, D, F	S	P, R	DAL, IRC
RN^50@2130%&	213	1/20	C, N	H, J, K	B, D	S	P, R	DAL, IRC
RN^50@2150%&	215	1/20	C, N	H, J, K	B, D, F	S	P, R	DAL, IRC
RN^50@2180%&	218	1/20	C, N	H, J, K	B, D	S	P, R	DAL, IRC
RN^50@2210%&	221	1/20	C, N	H, J, K	B, D, F	S	P, R	DAL, IRC
RN^50@2230%&	223	1/20	C, N	H, J, K	B, D	S	P, R	DAL, IRC
RN^50@2260%&	226	1/20	C, N	H, J, K	B, D, F	S	P, R	DAL, IRC
RN^50@2290%&	229	1/20	C, N	H, J, K	B, D	S	P, R	DAL, IRC
RN^50@2320%&	232	1/20	C, N	H, J, K	B, D, F	S	P, R	DAL, IRC
RN^50@2340%&	234	1/20	C, N	H, J, K	B, D	S	P, R	DAL, IRC
RN^50@2370%&	237	1/20	C, N	H, J, K	B, D, F	S	P, R	DAL, IRC
RN^50@2400%&	240	1/20	C, N	H, J, K	B, D	S	P, R	DAL, IRC
RN^50@2430%&	243	1/20	C, N	H, J, K	B, D, F	S	P, R	DAL, IRC
RN^50@2460%&	246	1/20	C, N	H, J, K	B, D	S	P, R	DAL, IRC
RN^50@2490%&	249	1/20	C, N	H, J, K	B, D, F	S	P, R	DAL, IRC
RN^50@2520%&	252	1/20	C, N	H, J, K	B, D	S	P, R	DAL, IRC
RN^50@2550%&	255	1/20	C, N	H, J, K	B, D, F	S	P, R	DAL, IRC
RN^50@2580%&	258	1/20	C, N	H, J, K	B, D	S	P, R	DAL, IRC
RN^50@2610%&	261	1/20	C, N	H, J, K	B, D, F	S	P, R	DAL, IRC
RN^50@2640%&	264	1/20	C, N	H, J, K	B, D	S	P, R	DAL, IRC
RN^50@2670%&	267	1/20	C, N	H, J, K	B, D, F	S	P, R	DAL, IRC
RN^50@2710%&	271	1/20	C, N	H, J, K	B, D	S	P, R	DAL, IRC
RN^50@2740%&	274	1/20	C, N	H, J, K	B, D, F	S	P, R	DAL, IRC
RN^50@2770%&	277	1/20	C, N	H, J, K	B, D	S	P, R	DAL, IRC
RN^50@2800%&	280	1/20	C, N	H, J, K	B, D, F	S	P, R	DAL, IRC
RN^50@2840%&	284	1/20	C, N	H, J, K	B, D	S	P, R	DAL, IRC
RN^50@2870%&	287	1/20	C, N	H, J, K	B, D, F	S	P, R	DAL, IRC
RN^50@2910%&	291	1/20	C, N	H, J, K	B, D	S	P, R	DAL, IRC
RN^50@2940%&	294	1/20	C, N	H, J, K	B, D, F	S	P, R	DAL, IRC
RN^50@2980%&	298	1/20	C, N	H, J, K	B, D	S	P, R	DAL, IRC

RN^50@3010%&	301	1/20	C, N	H, J, K	B, D, F	S	P, R	DAL, IRC
RN^50@3050%&	305	1/20	C, N	H, J, K	B, D	S	P, R	DAL, IRC
RN^50@3090%&	309	1/20	C, N	H, J, K	B, D, F	S	P, R	DAL, IRC
RN^50@3120%&	312	1/20	C, N	H, J, K	B, D	S	P, R	DAL, IRC
RN^50@3160%&	316	1/20	C, N	H, J, K	B, D, F	S	P, R	DAL, IRC
RN^50@3200%&	320	1/20	C, N	H, J, K	B, D	S	P, R	DAL, IRC
RN^50@3240%&	324	1/20	C, N	H, J, K	B, D, F	S	P, R	DAL, IRC
RN^50@3280%&	328	1/20	C, N	H, J, K	B, D	S	P, R	DAL, IRC
RN^50@3320%&	332	1/20	C, N	H, J, K	B, D, F	S	P, R	DAL, IRC
RN^50@3360%&	336	1/20	C, N	H, J, K	B, D	S	P, R	DAL, IRC
RN^50@3400%&	340	1/20	C, N	H, J, K	B, D, F	S	P, R	DAL, IRC
RN^50@3440%&	344	1/20	C, N	H, J, K	B, D	S	P, R	DAL, IRC
RN^50@3480%&	348	1/20	C, N	H, J, K	B, D, F	S	P, R	DAL, IRC
RN^50@3520%&	352	1/20	C, N	H, J, K	B, D	S	P, R	DAL, IRC
RN^50@3570%&	357	1/20	C, N	H, J, K	B, D, F	S	P, R	DAL, IRC
RN^50@3610%&	361	1/20	C, N	H, J, K	B, D	S	P, R	DAL, IRC
RN^50@3650%&	365	1/20	C, N	H, J, K	B, D, F	S	P, R	DAL, IRC
RN^50@3700%&	370	1/20	C, N	H, J, K	B, D	S	P, R	DAL, IRC
RN^50@3740%&	374	1/20	C, N	H, J, K	B, D, F	S	P, R	DAL, IRC
RN^50@3790%&	379	1/20	C, N	H, J, K	B, D	S	P, R	DAL, IRC
RN^50@3830%&	383	1/20	C, N	H, J, K	B, D, F	S	P, R	DAL, IRC
RN^50@3880%&	388	1/20	C, N	H, J, K	B, D	S	P, R	DAL, IRC
RN^50@3920%&	392	1/20	C, N	H, J, K	B, D, F	S	P, R	DAL, IRC
RN^50@3970%&	397	1/20	C, N	H, J, K	B, D	S	P, R	DAL, IRC
RN^50@4020%&	402	1/20	C, N	H, J, K	B, D, F	S	P, R	DAL, IRC
RN^50@4070%&	407	1/20	C, N	H, J, K	B, D	S	P, R	DAL, IRC
RN^50@4120%&	412	1/20	C, N	H, J, K	B, D, F	S	P, R	DAL, IRC
RN^50@4170%&	417	1/20	C, N	H, J, K	B, D	S	P, R	DAL, IRC
RN^50@4220%&	422	1/20	C, N	H, J, K	B, D, F	S	P, R	DAL, IRC
RN^50@4270%&	427	1/20	C, N	H, J, K	B, D	S	P, R	DAL, IRC
RN^50@4320%&	432	1/20	C, N	H, J, K	B, D, F	S	P, R	DAL, IRC
RN^50@4370%&	437	1/20	C, N	H, J, K	B, D	S	P, R	DAL, IRC
RN^50@4420%&	442	1/20	C, N	H, J, K	B, D, F	S	P, R	DAL, IRC
RN^50@4480%&	448	1/20	C, N	H, J, K	B, D	S	P, R	DAL, IRC
RN^50@4530%&	453	1/20	C, N	H, J, K	B, D, F	S	P, R	DAL, IRC
RN^50@4590%&	459	1/20	C, N	H, J, K	B, D	S	P, R	DAL, IRC
RN^50@4640%&	464	1/20	C, N	H, J, K	B, D, F	S	P, R	DAL, IRC
RN^50@4700%&	470	1/20	C, N	H, J, K	B, D	S	P, R	DAL, IRC
RN^50@4750%&	475	1/20	C, N	H, J, K	B, D, F	S	P, R	DAL, IRC
RN^50@4810%&	481	1/20	C, N	H, J, K	B, D	S	P, R	DAL, IRC
RN^50@4870%&	487	1/20	C, N	H, J, K	B, D, F	S	P, R	DAL, IRC
RN^50@4930%&	493	1/20	C, N	H, J, K	B, D	S	P, R	DAL, IRC
RN^50@4990%&	499	1/20	C, N	H, J, K	B, D, F	S	P, R	DAL, IRC
RN^50@5050%&	505	1/20	C, N	H, J, K	B, D	S	P, R	DAL, IRC
RN^50@5110%&	511	1/20	C, N	H, J, K	B, D, F	S	P, R	DAL, IRC
RN^50@5170%&	517	1/20	C, N	H, J, K	B, D	S	P, R	DAL, IRC
RN^50@5230%&	523	1/20	C, N	H, J, K	B, D, F	S	P, R	DAL, IRC

RN^50@5300%&	530	1/20	C, N	H, J, K	B, D	S	P, R	DAL, IRC
RN^50@5360%&	536	1/20	C, N	H, J, K	B, D, F	S	P, R	DAL, IRC
RN^50@5420%&	542	1/20	C, N	H, J, K	B, D	S	P, R	DAL, IRC
RN^50@5490%&	549	1/20	C, N	H, J, K	B, D, F	S	P, R	DAL, IRC
RN^50@5560%&	556	1/20	C, N	H, J, K	B, D	S	P, R	DAL, IRC
RN^50@5620%&	562	1/20	C, N	H, J, K	B, D, F	S	P, R	DAL, IRC
RN^50@5690%&	569	1/20	C, N	H, J, K	B, D	S	P, R	DAL, IRC
RN^50@5760%&	576	1/20	C, N	H, J, K	B, D, F	S	P, R	DAL, IRC
RN^50@5830%&	583	1/20	C, N	H, J, K	B, D	S	P, R	DAL, IRC
RN^50@5900%&	590	1/20	C, N	H, J, K	B, D, F	S	P, R	DAL, IRC
RN^50@5970%&	597	1/20	C, N	H, J, K	B, D	S	P, R	DAL, IRC
RN^50@6040%&	604	1/20	C, N	H, J, K	B, D, F	S	P, R	DAL, IRC
RN^50@6120%&	612	1/20	C, N	H, J, K	B, D	S	P, R	DAL, IRC
RN^50@6190%&	619	1/20	C, N	H, J, K	B, D, F	S	P, R	DAL, IRC
RN^50@6260%&	626	1/20	C, N	H, J, K	B, D	S	P, R	DAL, IRC
RN^50@6340%&	634	1/20	C, N	H, J, K	B, D, F	S	P, R	DAL, IRC
RN^50@6420%&	642	1/20	C, N	H, J, K	B, D	S	P, R	DAL, IRC
RN^50@6490%&	649	1/20	C, N	H, J, K	B, D, F	S	P, R	DAL, IRC
RN^50@6570%&	657	1/20	C, N	H, J, K	B, D	S	P, R	DAL, IRC
RN^50@6650%&	665	1/20	C, N	H, J, K	B, D, F	S	P, R	DAL, IRC
RN^50@6730%&	673	1/20	C, N	H, J, K	B, D	S	P, R	DAL, IRC
RN^50@6810%&	681	1/20	C, N	H, J, K	B, D, F	S	P, R	DAL, IRC
RN^50@6900%&	690	1/20	C, N	H, J, K	B, D	S	P, R	DAL, IRC
RN^50@6980%&	698	1/20	C, N	H, J, K	B, D, F	S	P, R	DAL, IRC
RN^50@7060%&	706	1/20	C, N	H, J, K	B, D	S	P, R	DAL, IRC
RN^50@7150%&	715	1/20	C, N	H, J, K	B, D, F	S	P, R	DAL, IRC
RN^50@7230%&	723	1/20	C, N	H, J, K	B, D	S	P, R	DAL, IRC
RN^50@7320%&	732	1/20	C, N	H, J, K	B, D, F	S	P, R	DAL, IRC
RN^50@7410%&	741	1/20	C, N	H, J, K	B, D	S	P, R	DAL, IRC
RN^50@7500%&	750	1/20	C, N	H, J, K	B, D, F	S	P, R	DAL, IRC
RN^50@7590%&	759	1/20	C, N	H, J, K	B, D	S	P, R	DAL, IRC
RN^50@7680%&	768	1/20	C, N	H, J, K	B, D, F	S	P, R	DAL, IRC
RN^50@7770%&	777	1/20	C, N	H, J, K	B, D	S	P, R	DAL, IRC
RN^50@7870%&	787	1/20	C, N	H, J, K	B, D, F	S	P, R	DAL, IRC
RN^50@7960%&	796	1/20	C, N	H, J, K	B, D	S	P, R	DAL, IRC
RN^50@8060%&	806	1/20	C, N	H, J, K	B, D, F	S	P, R	DAL, IRC
RN^50@8160%&	816	1/20	C, N	H, J, K	B, D	S	P, R	DAL, IRC
RN^50@8250%&	825	1/20	C, N	H, J, K	B, D, F	S	P, R	DAL, IRC
RN^50@8350%&	835	1/20	C, N	H, J, K	B, D	S	P, R	DAL, IRC
RN^50@8450%&	845	1/20	C, N	H, J, K	B, D, F	S	P, R	DAL, IRC
RN^50@8560%&	856	1/20	C, N	H, J, K	B, D	S	P, R	DAL, IRC
RN^50@8660%&	866	1/20	C, N	H, J, K	B, D, F	S	P, R	DAL, IRC
RN^50@8760%&	876	1/20	C, N	H, J, K	B, D	S	P, R	DAL, IRC
RN^50@8870%&	887	1/20	C, N	H, J, K	B, D, F	S	P, R	DAL, IRC
RN^50@8980%&	898	1/20	C, N	H, J, K	B, D	S	P, R	DAL, IRC
RN^50@9090%&	909	1/20	C, N	H, J, K	B, D, F	S	P, R	DAL, IRC
RN^50@9200%&	920	1/20	C, N	H, J, K	B, D	S	P, R	DAL, IRC

RN^50@9310%&	931	1/20	C, N	H, J, K	B, D, F	S	P, R	DAL, IRC
RN^50@9420%&	942	1/20	C, N	H, J, K	B, D	S	P, R	DAL, IRC
RN^50@9530%&	953	1/20	C, N	H, J, K	B, D, F	S	P, R	DAL, IRC
RN^50@9650%&	965	1/20	C, N	H, J, K	B, D	S	P, R	DAL, IRC
RN^50@9760%&	976	1/20	C, N	H, J, K	B, D, F	S	P, R	DAL, IRC
RN^50@9880%&	988	1/20	C, N	H, J, K	B, D	S	P, R	DAL, IRC
RN^50@1001%&	1,000	1/20	C, N	H, J, K	B, D, F	S	P, R	DAL, IRC
RN^50@1011%&	1,010	1/20	C, N	H, J, K	B, D	S	P, R	DAL, IRC
RN^50@1021%&	1,020	1/20	C, N	H, J, K	B, D, F	S	P, R	DAL, IRC
RN^50@1041%&	1,040	1/20	C, N	H, J, K	B, D	S	P, R	DAL, IRC
RN^50@1051%&	1,050	1/20	C, N	H, J, K	B, D, F	S	P, R	DAL, IRC
RN^50@1061%&	1,060	1/20	C, N	H, J, K	B, D	S	P, R	DAL, IRC
RN^50@1071%&	1,070	1/20	C, N	H, J, K	B, D, F	S	P, R	DAL, IRC
RN^50@1091%&	1,090	1/20	C, N	H, J, K	B, D	S	P, R	DAL, IRC
RN^50@1101%&	1,100	1/20	C, N	H, J, K	B, D, F	S	P, R	DAL, IRC
RN^50@1111%&	1,110	1/20	C, N	H, J, K	B, D	S	P, R	DAL, IRC
RN^50@1131%&	1,130	1/20	C, N	H, J, K	B, D, F	S	P, R	DAL, IRC
RN^50@1141%&	1,140	1/20	C, N	H, J, K	B, D	S	P, R	DAL, IRC
RN^50@1151%&	1,150	1/20	C, N	H, J, K	B, D, F	S	P, R	DAL, IRC
RN^50@1171%&	1,170	1/20	C, N	H, J, K	B, D	S	P, R	DAL, IRC
RN^50@1181%&	1,180	1/20	C, N	H, J, K	B, D, F	S	P, R	DAL, IRC
RN^50@1201%&	1,200	1/20	C, N	H, J, K	B, D	S	P, R	DAL, IRC
RN^50@1211%&	1,210	1/20	C, N	H, J, K	B, D, F	S	P, R	DAL, IRC
RN^50@1231%&	1,230	1/20	C, N	H, J, K	B, D	S	P, R	DAL, IRC
RN^50@1241%&	1,240	1/20	C, N	H, J, K	B, D, F	S	P, R	DAL, IRC
RN^50@1261%&	1,260	1/20	C, N	H, J, K	B, D	S	P, R	DAL, IRC
RN^50@1271%&	1,270	1/20	C, N	H, J, K	B, D, F	S	P, R	DAL, IRC
RN^50@1291%&	1,290	1/20	C, N	H, J, K	B, D	S	P, R	DAL, IRC
RN^50@1301%&	1,300	1/20	C, N	H, J, K	B, D, F	S	P, R	DAL, IRC
RN^50@1321%&	1,320	1/20	C, N	H, J, K	B, D	S	P, R	DAL, IRC
RN^50@1331%&	1,330	1/20	C, N	H, J, K	B, D, F	S	P, R	DAL, IRC
RN^50@1351%&	1,350	1/20	C, N	H, J, K	B, D	S	P, R	DAL, IRC
RN^50@1371%&	1,370	1/20	C, N	H, J, K	B, D, F	S	P, R	DAL, IRC
RN^50@1381%&	1,380	1/20	C, N	H, J, K	B, D	S	P, R	DAL, IRC
RN^50@1401%&	1,400	1/20	C, N	H, J, K	B, D, F	S	P, R	DAL, IRC
RN^50@1421%&	1,420	1/20	C, N	H, J, K	B, D	S	P, R	DAL, IRC
RN^50@1431%&	1,430	1/20	C, N	H, J, K	B, D, F	S	P, R	DAL, IRC
RN^50@1451%&	1,450	1/20	C, N	H, J, K	B, D	S	P, R	DAL, IRC
RN^50@1471%&	1,470	1/20	C, N	H, J, K	B, D, F	S	P, R	DAL, IRC
RN^50@1491%&	1,490	1/20	C, N	H, J, K	B, D	S	P, R	DAL, IRC
RN^50@1501%&	1,500	1/20	C, N	H, J, K	B, D, F	S	P, R	DAL, IRC
RN^50@1521%&	1,520	1/20	C, N	H, J, K	B, D	S	P, R	DAL, IRC
RN^50@1541%&	1,540	1/20	C, N	H, J, K	B, D, F	S	P, R	DAL, IRC
RN^50@1561%&	1,560	1/20	C, N	H, J, K	B, D	S	P, R	DAL, IRC
RN^50@1581%&	1,580	1/20	C, N	H, J, K	B, D, F	S	P, R	DAL, IRC
RN^50@1601%&	1,600	1/20	C, N	H, J, K	B, D	S	P, R	DAL, IRC
RN^50@1621%&	1,620	1/20	C, N	H, J, K	B, D, F	S	P, R	DAL, IRC

RN^50@1641%&	1,640	1/20	C, N	H, J, K	B, D	S	P, R	DAL, IRC
RN^50@1651%&	1,650	1/20	C, N	H, J, K	B, D, F	S	P, R	DAL, IRC
RN^50@1671%&	1,670	1/20	C, N	H, J, K	B, D	S	P, R	DAL, IRC
RN^50@1691%&	1,690	1/20	C, N	H, J, K	B, D, F	S	P, R	DAL, IRC
RN^50@1721%&	1,720	1/20	C, N	H, J, K	B, D	S	P, R	DAL, IRC
RN^50@1741%&	1,740	1/20	C, N	H, J, K	B, D, F	S	P, R	DAL, IRC
RN^50@1761%&	1,760	1/20	C, N	H, J, K	B, D	S	P, R	DAL, IRC
RN^50@1781%&	1,780	1/20	C, N	H, J, K	B, D, F	S	P, R	DAL, IRC
RN^50@1801%&	1,800	1/20	C, N	H, J, K	B, D	S	P, R	DAL, IRC
RN^50@1821%&	1,820	1/20	C, N	H, J, K	B, D, F	S	P, R	DAL, IRC
RN^50@1841%&	1,840	1/20	C, N	H, J, K	B, D	S	P, R	DAL, IRC
RN^50@1871%&	1,870	1/20	C, N	H, J, K	B, D, F	S	P, R	DAL, IRC
RN^50@1891%&	1,890	1/20	C, N	H, J, K	B, D	S	P, R	DAL, IRC
RN^50@1911%&	1,910	1/20	C, N	H, J, K	B, D, F	S	P, R	DAL, IRC
RN^50@1931%&	1,930	1/20	C, N	H, J, K	B, D	S	P, R	DAL, IRC
RN^50@1961%&	1,960	1/20	C, N	H, J, K	B, D, F	S	P, R	DAL, IRC
RN^50@1981%&	1,980	1/20	C, N	H, J, K	B, D	S	P, R	DAL, IRC
RN^50@2001%&	2,000	1/20	C, N	H, J, K	B, D, F	S	P, R	DAL, IRC
RN^50@2031%&	2,030	1/20	C, N	H, J, K	B, D	S	P, R	DAL, IRC
RN^50@2051%&	2,050	1/20	C, N	H, J, K	B, D, F	S	P, R	DAL, IRC
RN^50@2081%&	2,080	1/20	C, N	H, J, K	B, D	S	P, R	DAL, IRC
RN^50@2101%&	2,100	1/20	C, N	H, J, K	B, D, F	S	P, R	DAL, IRC
RN^50@2131%&	2,130	1/20	C, N	H, J, K	B, D	S	P, R	DAL, IRC
RN^50@2151%&	2,150	1/20	C, N	H, J, K	B, D, F	S	P, R	DAL, IRC
RN^50@2181%&	2,180	1/20	C, N	H, J, K	B, D	S	P, R	DAL, IRC
RN^50@2211%&	2,210	1/20	C, N	H, J, K	B, D, F	S	P, R	DAL, IRC
RN^50@2231%&	2,230	1/20	C, N	H, J, K	B, D	S	P, R	DAL, IRC
RN^50@2261%&	2,260	1/20	C, N	H, J, K	B, D, F	S	P, R	DAL, IRC
RN^50@2291%&	2,290	1/20	C, N	H, J, K	B, D	S	P, R	DAL, IRC
RN^50@2321%&	2,320	1/20	C, N	H, J, K	B, D, F	S	P, R	DAL, IRC
RN^50@2341%&	2,340	1/20	C, N	H, J, K	B, D	S	P, R	DAL, IRC
RN^50@2371%&	2,370	1/20	C, N	H, J, K	B, D, F	S	P, R	DAL, IRC
RN^50@2401%&	2,400	1/20	C, N	H, J, K	B, D	S	P, R	DAL, IRC
RN^50@2431%&	2,430	1/20	C, N	H, J, K	B, D, F	S	P, R	DAL, IRC
RN^50@2461%&	2,460	1/20	C, N	H, J, K	B, D	S	P, R	DAL, IRC
RN^50@2491%&	2,490	1/20	C, N	H, J, K	B, D, F	S	P, R	DAL, IRC
RN^50@2521%&	2,520	1/20	C, N	H, J, K	B, D	S	P, R	DAL, IRC
RN^50@2551%&	2,550	1/20	C, N	H, J, K	B, D, F	S	P, R	DAL, IRC
RN^50@2581%&	2,580	1/20	C, N	H, J, K	B, D	S	P, R	DAL, IRC
RN^50@2611%&	2,610	1/20	C, N	H, J, K	B, D, F	S	P, R	DAL, IRC
RN^50@2641%&	2,640	1/20	C, N	H, J, K	B, D	S	P, R	DAL, IRC
RN^50@2671%&	2,670	1/20	C, N	H, J, K	B, D, F	S	P, R	DAL, IRC
RN^50@2711%&	2,710	1/20	C, N	H, J, K	B, D	S	P, R	DAL, IRC
RN^50@2741%&	2,740	1/20	C, N	H, J, K	B, D, F	S	P, R	DAL, IRC
RN^50@2771%&	2,770	1/20	C, N	H, J, K	B, D	S	P, R	DAL, IRC
RN^50@2801%&	2,800	1/20	C, N	H, J, K	B, D, F	S	P, R	DAL, IRC
RN^50@2841%&	2,840	1/20	C, N	H, J, K	B, D	S	P, R	DAL, IRC

RN^50@2871%&	2,870	1/20	C, N	H, J, K	B, D, F	S	P, R	DAL, IRC
RN^50@2911%&	2,910	1/20	C, N	H, J, K	B, D	S	P, R	DAL, IRC
RN^50@2941%&	2,940	1/20	C, N	H, J, K	B, D, F	S	P, R	DAL, IRC
RN^50@2981%&	2,980	1/20	C, N	H, J, K	B, D	S	P, R	DAL, IRC
RN^50@3011%&	3,010	1/20	C, N	H, J, K	B, D, F	S	P, R	DAL, IRC
RN^50@3051%&	3,050	1/20	C, N	H, J, K	B, D	S	P, R	DAL, IRC
RN^50@3091%&	3,090	1/20	C, N	H, J, K	B, D, F	S	P, R	DAL, IRC
RN^50@3121%&	3,120	1/20	C, N	H, J, K	B, D	S	P, R	DAL, IRC
RN^50@3161%&	3,160	1/20	C, N	H, J, K	B, D, F	S	P, R	DAL, IRC
RN^50@3201%&	3,200	1/20	C, N	H, J, K	B, D	S	P, R	DAL, IRC
RN^50@3241%&	3,240	1/20	C, N	H, J, K	B, D, F	S	P, R	DAL, IRC
RN^50@3281%&	3,280	1/20	C, N	H, J, K	B, D	S	P, R	DAL, IRC
RN^50@3321%&	3,320	1/20	C, N	H, J, K	B, D, F	S	P, R	DAL, IRC
RN^50@3361%&	3,360	1/20	C, N	H, J, K	B, D	S	P, R	DAL, IRC
RN^50@3401%&	3,400	1/20	C, N	H, J, K	B, D, F	S	P, R	DAL, IRC
RN^50@3441%&	3,440	1/20	C, N	H, J, K	B, D	S	P, R	DAL, IRC
RN^50@3481%&	3,480	1/20	C, N	H, J, K	B, D, F	S	P, R	DAL, IRC
RN^50@3521%&	3,520	1/20	C, N	H, J, K	B, D	S	P, R	DAL, IRC
RN^50@3571%&	3,570	1/20	C, N	H, J, K	B, D, F	S	P, R	DAL, IRC
RN^50@3611%&	3,610	1/20	C, N	H, J, K	B, D	S	P, R	DAL, IRC
RN^50@3651%&	3,650	1/20	C, N	H, J, K	B, D, F	S	P, R	DAL, IRC
RN^50@3701%&	3,700	1/20	C, N	H, J, K	B, D	S	P, R	DAL, IRC
RN^50@3741%&	3,740	1/20	C, N	H, J, K	B, D, F	S	P, R	DAL, IRC
RN^50@3791%&	3,790	1/20	C, N	H, J, K	B, D	S	P, R	DAL, IRC
RN^50@3831%&	3,830	1/20	C, N	H, J, K	B, D, F	S	P, R	DAL, IRC
RN^50@3881%&	3,880	1/20	C, N	H, J, K	B, D	S	P, R	DAL, IRC
RN^50@3921%&	3,920	1/20	C, N	H, J, K	B, D, F	S	P, R	DAL, IRC
RN^50@3971%&	3,970	1/20	C, N	H, J, K	B, D	S	P, R	DAL, IRC
RN^50@4021%&	4,020	1/20	C, N	H, J, K	B, D, F	S	P, R	DAL, IRC
RN^50@4071%&	4,070	1/20	C, N	H, J, K	B, D	S	P, R	DAL, IRC
RN^50@4121%&	4,120	1/20	C, N	H, J, K	B, D, F	S	P, R	DAL, IRC
RN^50@4171%&	4,170	1/20	C, N	H, J, K	B, D	S	P, R	DAL, IRC
RN^50@4221%&	4,220	1/20	C, N	H, J, K	B, D, F	S	P, R	DAL, IRC
RN^50@4271%&	4,270	1/20	C, N	H, J, K	B, D	S	P, R	DAL, IRC
RN^50@4321%&	4,320	1/20	C, N	H, J, K	B, D, F	S	P, R	DAL, IRC
RN^50@4371%&	4,370	1/20	C, N	H, J, K	B, D	S	P, R	DAL, IRC
RN^50@4421%&	4,420	1/20	C, N	H, J, K	B, D, F	S	P, R	DAL, IRC
RN^50@4481%&	4,480	1/20	C, N	H, J, K	B, D	S	P, R	DAL, IRC
RN^50@4531%&	4,530	1/20	C, N	H, J, K	B, D, F	S	P, R	DAL, IRC
RN^50@4591%&	4,590	1/20	C, N	H, J, K	B, D	S	P, R	DAL, IRC
RN^50@4641%&	4,640	1/20	C, N	H, J, K	B, D, F	S	P, R	DAL, IRC
RN^50@4701%&	4,700	1/20	C, N	H, J, K	B, D	S	P, R	DAL, IRC
RN^50@4751%&	4,750	1/20	C, N	H, J, K	B, D, F	S	P, R	DAL, IRC
RN^50@4811%&	4,810	1/20	C, N	H, J, K	B, D	S	P, R	DAL, IRC
RN^50@4871%&	4,870	1/20	C, N	H, J, K	B, D, F	S	P, R	DAL, IRC
RN^50@4931%&	4,930	1/20	C, N	H, J, K	B, D	S	P, R	DAL, IRC
RN^50@4991%&	4,990	1/20	C, N	H, J, K	B, D, F	S	P, R	DAL, IRC

RN^50@5051%&	5,050	1/20	C, N	H, J, K	B, D	S	P, R	DAL, IRC
RN^50@5111%&	5,110	1/20	C, N	H, J, K	B, D, F	S	P, R	DAL, IRC
RN^50@5171%&	5,170	1/20	C, N	H, J, K	B, D	S	P, R	DAL, IRC
RN^50@5231%&	5,230	1/20	C, N	H, J, K	B, D, F	S	P, R	DAL, IRC
RN^50@5301%&	5,300	1/20	C, N	H, J, K	B, D	S	P, R	DAL, IRC
RN^50@5361%&	5,360	1/20	C, N	H, J, K	B, D, F	S	P, R	DAL, IRC
RN^50@5421%&	5,420	1/20	C, N	H, J, K	B, D	S	P, R	DAL, IRC
RN^50@5491%&	5,490	1/20	C, N	H, J, K	B, D, F	S	P, R	DAL, IRC
RN^50@5561%&	5,560	1/20	C, N	H, J, K	B, D	S	P, R	DAL, IRC
RN^50@5621%&	5,620	1/20	C, N	H, J, K	B, D, F	S	P, R	DAL, IRC
RN^50@5691%&	5,690	1/20	C, N	H, J, K	B, D	S	P, R	DAL, IRC
RN^50@5761%&	5,760	1/20	C, N	H, J, K	B, D, F	S	P, R	DAL, IRC
RN^50@5831%&	5,830	1/20	C, N	H, J, K	B, D	S	P, R	DAL, IRC
RN^50@5901%&	5,900	1/20	C, N	H, J, K	B, D, F	S	P, R	DAL, IRC
RN^50@5971%&	5,970	1/20	C, N	H, J, K	B, D	S	P, R	DAL, IRC
RN^50@6041%&	6,040	1/20	C, N	H, J, K	B, D, F	S	P, R	DAL, IRC
RN^50@6121%&	6,120	1/20	C, N	H, J, K	B, D	S	P, R	DAL, IRC
RN^50@6191%&	6,190	1/20	C, N	H, J, K	B, D, F	S	P, R	DAL, IRC
RN^50@6261%&	6,260	1/20	C, N	H, J, K	B, D	S	P, R	DAL, IRC
RN^50@6341%&	6,340	1/20	C, N	H, J, K	B, D, F	S	P, R	DAL, IRC
RN^50@6421%&	6,420	1/20	C, N	H, J, K	B, D	S	P, R	DAL, IRC
RN^50@6491%&	6,490	1/20	C, N	H, J, K	B, D, F	S	P, R	DAL, IRC
RN^50@6571%&	6,570	1/20	C, N	H, J, K	B, D	S	P, R	DAL, IRC
RN^50@6651%&	6,650	1/20	C, N	H, J, K	B, D, F	S	P, R	DAL, IRC
RN^50@6731%&	6,730	1/20	C, N	H, J, K	B, D	S	P, R	DAL, IRC
RN^50@6811%&	6,810	1/20	C, N	H, J, K	B, D, F	S	P, R	DAL, IRC
RN^50@6901%&	6,900	1/20	C, N	H, J, K	B, D	S	P, R	DAL, IRC
RN^50@6981%&	6,980	1/20	C, N	H, J, K	B, D, F	S	P, R	DAL, IRC
RN^50@7061%&	7,060	1/20	C, N	H, J, K	B, D	S	P, R	DAL, IRC
RN^50@7151%&	7,150	1/20	C, N	H, J, K	B, D, F	S	P, R	DAL, IRC
RN^50@7231%&	7,230	1/20	C, N	H, J, K	B, D	S	P, R	DAL, IRC
RN^50@7321%&	7,320	1/20	C, N	H, J, K	B, D, F	S	P, R	DAL, IRC
RN^50@7411%&	7,410	1/20	C, N	H, J, K	B, D	S	P, R	DAL, IRC
RN^50@7501%&	7,500	1/20	C, N	H, J, K	B, D, F	S	P, R	DAL, IRC
RN^50@7591%&	7,590	1/20	C, N	H, J, K	B, D	S	P, R	DAL, IRC
RN^50@7681%&	7,680	1/20	C, N	H, J, K	B, D, F	S	P, R	DAL, IRC
RN^50@7771%&	7,770	1/20	C, N	H, J, K	B, D	S	P, R	DAL, IRC
RN^50@7871%&	7,870	1/20	C, N	H, J, K	B, D, F	S	P, R	DAL, IRC
RN^50@7961%&	7,960	1/20	C, N	H, J, K	B, D	S	P, R	DAL, IRC
RN^50@8061%&	8,060	1/20	C, N	H, J, K	B, D, F	S	P, R	DAL, IRC
RN^50@8161%&	8,160	1/20	C, N	H, J, K	B, D	S	P, R	DAL, IRC
RN^50@8251%&	8,250	1/20	C, N	H, J, K	B, D, F	S	P, R	DAL, IRC
RN^50@8351%&	8,350	1/20	C, N	H, J, K	B, D	S	P, R	DAL, IRC
RN^50@8451%&	8,450	1/20	C, N	H, J, K	B, D, F	S	P, R	DAL, IRC
RN^50@8561%&	8,560	1/20	C, N	H, J, K	B, D	S	P, R	DAL, IRC
RN^50@8661%&	8,660	1/20	C, N	H, J, K	B, D, F	S	P, R	DAL, IRC
RN^50@8761%&	8,760	1/20	C, N	H, J, K	B, D	S	P, R	DAL, IRC

RN^50@8871%&	8,870	1/20	C, N	H, J, K	B, D, F	S	P, R	DAL, IRC
RN^50@8981%&	8,980	1/20	C, N	H, J, K	B, D	S	P, R	DAL, IRC
RN^50@9091%&	9,090	1/20	C, N	H, J, K	B, D, F	S	P, R	DAL, IRC
RN^50@9201%&	9,200	1/20	C, N	H, J, K	B, D	S	P, R	DAL, IRC
RN^50@9311%&	9,310	1/20	C, N	H, J, K	B, D, F	S	P, R	DAL, IRC
RN^50@9421%&	9,420	1/20	C, N	H, J, K	B, D	S	P, R	DAL, IRC
RN^50@9531%&	9,530	1/20	C, N	H, J, K	B, D, F	S	P, R	DAL, IRC
RN^50@9651%&	9,650	1/20	C, N	H, J, K	B, D	S	P, R	DAL, IRC
RN^50@9761%&	9,760	1/20	C, N	H, J, K	B, D, F	S	P, R	DAL, IRC
RN^50@9881%&	9,880	1/20	C, N	H, J, K	B, D	S	P, R	DAL, IRC
RN^50@1002%&	10,000	1/20	C, N	H, J, K	B, D, F	S	P, R	DAL, IRC
RN^50@1012%&	10,100	1/20	C, N	H, J, K	B, D	S	P, R	DAL, IRC
RN^50@1022%&	10,200	1/20	C, N	H, J, K	B, D, F	S	P, R	DAL, IRC
RN^50@1042%&	10,400	1/20	C, N	H, J, K	B, D	S	P, R	DAL, IRC
RN^50@1052%&	10,500	1/20	C, N	H, J, K	B, D, F	S	P, R	DAL, IRC
RN^50@1062%&	10,600	1/20	C, N	H, J, K	B, D	S	P, R	DAL, IRC
RN^50@1072%&	10,700	1/20	C, N	H, J, K	B, D, F	S	P, R	DAL, IRC
RN^50@1092%&	10,900	1/20	C, N	H, J, K	B, D	S	P, R	DAL, IRC
RN^50@1102%&	11,000	1/20	C, N	H, J, K	B, D, F	S	P, R	DAL, IRC
RN^50@1112%&	11,100	1/20	C, N	H, J, K	B, D	S	P, R	DAL, IRC
RN^50@1132%&	11,300	1/20	C, N	H, J, K	B, D, F	S	P, R	DAL, IRC
RN^50@1142%&	11,400	1/20	C, N	H, J, K	B, D	S	P, R	DAL, IRC
RN^50@1152%&	11,500	1/20	C, N	H, J, K	B, D, F	S	P, R	DAL, IRC
RN^50@1172%&	11,700	1/20	C, N	H, J, K	B, D	S	P, R	DAL, IRC
RN^50@1182%&	11,800	1/20	C, N	H, J, K	B, D, F	S	P, R	DAL, IRC
RN^50@1202%&	12,000	1/20	C, N	H, J, K	B, D	S	P, R	DAL, IRC
RN^50@1212%&	12,100	1/20	C, N	H, J, K	B, D, F	S	P, R	DAL, IRC
RN^50@1232%&	12,300	1/20	C, N	H, J, K	B, D	S	P, R	DAL, IRC
RN^50@1242%&	12,400	1/20	C, N	H, J, K	B, D, F	S	P, R	DAL, IRC
RN^50@1262%&	12,600	1/20	C, N	H, J, K	B, D	S	P, R	DAL, IRC
RN^50@1272%&	12,700	1/20	C, N	H, J, K	B, D, F	S	P, R	DAL, IRC
RN^50@1292%&	12,900	1/20	C, N	H, J, K	B, D	S	P, R	DAL, IRC
RN^50@1302%&	13,000	1/20	C, N	H, J, K	B, D, F	S	P, R	DAL, IRC
RN^50@1322%&	13,200	1/20	C, N	H, J, K	B, D	S	P, R	DAL, IRC
RN^50@1332%&	13,300	1/20	C, N	H, J, K	B, D, F	S	P, R	DAL, IRC
RN^50@1352%&	13,500	1/20	C, N	H, J, K	B, D	S	P, R	DAL, IRC
RN^50@1372%&	13,700	1/20	C, N	H, J, K	B, D, F	S	P, R	DAL, IRC
RN^50@1382%&	13,800	1/20	C, N	H, J, K	B, D	S	P, R	DAL, IRC
RN^50@1402%&	14,000	1/20	C, N	H, J, K	B, D, F	S	P, R	DAL, IRC
RN^50@1422%&	14,200	1/20	C, N	H, J, K	B, D	S	P, R	DAL, IRC
RN^50@1432%&	14,300	1/20	C, N	H, J, K	B, D, F	S	P, R	DAL, IRC
RN^50@1452%&	14,500	1/20	C, N	H, J, K	B, D	S	P, R	DAL, IRC
RN^50@1472%&	14,700	1/20	C, N	H, J, K	B, D, F	S	P, R	DAL, IRC
RN^50@1492%&	14,900	1/20	C, N	H, J, K	B, D	S	P, R	DAL, IRC
RN^50@1502%&	15,000	1/20	C, N	H, J, K	B, D, F	S	P, R	DAL, IRC
RN^50@1522%&	15,200	1/20	C, N	H, J, K	B, D	S	P, R	DAL, IRC
RN^50@1542%&	15,400	1/20	C, N	H, J, K	B, D, F	S	P, R	DAL, IRC

RN^50@1562%&	15,600	1/20	C, N	H, J, K	B, D	S	P, R	DAL, IRC
RN^50@1582%&	15,800	1/20	C, N	H, J, K	B, D, F	S	P, R	DAL, IRC
RN^50@1602%&	16,000	1/20	C, N	H, J, K	B, D	S	P, R	DAL, IRC
RN^50@1622%&	16,200	1/20	C, N	H, J, K	B, D, F	S	P, R	DAL, IRC
RN^50@1642%&	16,400	1/20	C, N	H, J, K	B, D	S	P, R	DAL, IRC
RN^50@1652%&	16,500	1/20	C, N	H, J, K	B, D, F	S	P, R	DAL, IRC
RN^50@1672%&	16,700	1/20	C, N	H, J, K	B, D	S	P, R	DAL, IRC
RN^50@1692%&	16,900	1/20	C, N	H, J, K	B, D, F	S	P, R	DAL, IRC
RN^50@1722%&	17,200	1/20	C, N	H, J, K	B, D	S	P, R	DAL, IRC
RN^50@1742%&	17,400	1/20	C, N	H, J, K	B, D, F	S	P, R	DAL, IRC
RN^50@1762%&	17,600	1/20	C, N	H, J, K	B, D	S	P, R	DAL, IRC
RN^50@1782%&	17,800	1/20	C, N	H, J, K	B, D, F	S	P, R	DAL, IRC
RN^50@1802%&	18,000	1/20	C, N	H, J, K	B, D	S	P, R	DAL, IRC
RN^50@1822%&	18,200	1/20	C, N	H, J, K	B, D, F	S	P, R	DAL, IRC
RN^50@1842%&	18,400	1/20	C, N	H, J, K	B, D	S	P, R	DAL, IRC
RN^50@1872%&	18,700	1/20	C, N	H, J, K	B, D, F	S	P, R	DAL, IRC
RN^50@1892%&	18,900	1/20	C, N	H, J, K	B, D	S	P, R	DAL, IRC
RN^50@1912%&	19,100	1/20	C, N	H, J, K	B, D, F	S	P, R	DAL, IRC
RN^50@1932%&	19,300	1/20	C, N	H, J, K	B, D	S	P, R	DAL, IRC
RN^50@1962%&	19,600	1/20	C, N	H, J, K	B, D, F	S	P, R	DAL, IRC
RN^50@1982%&	19,800	1/20	C, N	H, J, K	B, D	S	P, R	DAL, IRC
RN^50@2002%&	20,000	1/20	C, N	H, J, K	B, D, F	S	P, R	DAL, IRC
RN^50@2032%&	20,300	1/20	C, N	H, J, K	B, D	S	P, R	DAL, IRC
RN^50@2052%&	20,500	1/20	C, N	H, J, K	B, D, F	S	P, R	DAL, IRC
RN^50@2082%&	20,800	1/20	C, N	H, J, K	B, D	S	P, R	DAL, IRC
RN^50@2102%&	21,000	1/20	C, N	H, J, K	B, D, F	S	P, R	DAL, IRC
RN^50@2132%&	21,300	1/20	C, N	H, J, K	B, D	S	P, R	DAL, IRC
RN^50@2152%&	21,500	1/20	C, N	H, J, K	B, D, F	S	P, R	DAL, IRC
RN^50@2182%&	21,800	1/20	C, N	H, J, K	B, D	S	P, R	DAL, IRC
RN^50@2212%&	22,100	1/20	C, N	H, J, K	B, D, F	S	P, R	DAL, IRC
RN^50@2232%&	22,300	1/20	C, N	H, J, K	B, D	S	P, R	DAL, IRC
RN^50@2262%&	22,600	1/20	C, N	H, J, K	B, D, F	S	P, R	DAL, IRC
RN^50@2292%&	22,900	1/20	C, N	H, J, K	B, D	S	P, R	DAL, IRC
RN^50@2322%&	23,200	1/20	C, N	H, J, K	B, D, F	S	P, R	DAL, IRC
RN^50@2342%&	23,400	1/20	C, N	H, J, K	B, D	S	P, R	DAL, IRC
RN^50@2372%&	23,700	1/20	C, N	H, J, K	B, D, F	S	P, R	DAL, IRC
RN^50@2402%&	24,000	1/20	C, N	H, J, K	B, D	S	P, R	DAL, IRC
RN^50@2432%&	24,300	1/20	C, N	H, J, K	B, D, F	S	P, R	DAL, IRC
RN^50@2462%&	24,600	1/20	C, N	H, J, K	B, D	S	P, R	DAL, IRC
RN^50@2492%&	24,900	1/20	C, N	H, J, K	B, D, F	S	P, R	DAL, IRC
RN^50@2522%&	25,200	1/20	C, N	H, J, K	B, D	S	P, R	DAL, IRC
RN^50@2552%&	25,500	1/20	C, N	H, J, K	B, D, F	S	P, R	DAL, IRC
RN^50@2582%&	25,800	1/20	C, N	H, J, K	B, D	S	P, R	DAL, IRC
RN^50@2612%&	26,100	1/20	C, N	H, J, K	B, D, F	S	P, R	DAL, IRC
RN^50@2642%&	26,400	1/20	C, N	H, J, K	B, D	S	P, R	DAL, IRC
RN^50@2672%&	26,700	1/20	C, N	H, J, K	B, D, F	S	P, R	DAL, IRC
RN^50@2712%&	27,100	1/20	C, N	H, J, K	B, D	S	P, R	DAL, IRC

RN^50@2742%&	27,400	1/20	C, N	H, J, K	B, D, F	S	P, R	DAL, IRC
RN^50@2772%&	27,700	1/20	C, N	H, J, K	B, D	S	P, R	DAL, IRC
RN^50@2802%&	28,000	1/20	C, N	H, J, K	B, D, F	S	P, R	DAL, IRC
RN^50@2842%&	28,400	1/20	C, N	H, J, K	B, D	S	P, R	DAL, IRC
RN^50@2872%&	28,700	1/20	C, N	H, J, K	B, D, F	S	P, R	DAL, IRC
RN^50@2912%&	29,100	1/20	C, N	H, J, K	B, D	S	P, R	DAL, IRC
RN^50@2942%&	29,400	1/20	C, N	H, J, K	B, D, F	S	P, R	DAL, IRC
RN^50@2982%&	29,800	1/20	C, N	H, J, K	B, D	S	P, R	DAL, IRC
RN^50@3012%&	30,100	1/20	C, N	H, J, K	B, D, F	S	P, R	DAL, IRC
RN^50@3052%&	30,500	1/20	C, N	H, J, K	B, D	S	P, R	DAL, IRC
RN^50@3092%&	30,900	1/20	C, N	H, J, K	B, D, F	S	P, R	DAL, IRC
RN^50@3122%&	31,200	1/20	C, N	H, J, K	B, D	S	P, R	DAL, IRC
RN^50@3162%&	31,600	1/20	C, N	H, J, K	B, D, F	S	P, R	DAL, IRC
RN^50@3202%&	32,000	1/20	C, N	H, J, K	B, D	S	P, R	DAL, IRC
RN^50@3242%&	32,400	1/20	C, N	H, J, K	B, D, F	S	P, R	DAL, IRC
RN^50@3282%&	32,800	1/20	C, N	H, J, K	B, D	S	P, R	DAL, IRC
RN^50@3322%&	33,200	1/20	C, N	H, J, K	B, D, F	S	P, R	DAL, IRC
RN^50@3362%&	33,600	1/20	C, N	H, J, K	B, D	S	P, R	DAL, IRC
RN^50@3402%&	34,000	1/20	C, N	H, J, K	B, D, F	S	P, R	DAL, IRC
RN^50@3442%&	34,400	1/20	C, N	H, J, K	B, D	S	P, R	DAL, IRC
RN^50@3482%&	34,800	1/20	C, N	H, J, K	B, D, F	S	P, R	DAL, IRC
RN^50@3522%&	35,200	1/20	C, N	H, J, K	B, D	S	P, R	DAL, IRC
RN^50@3572%&	35,700	1/20	C, N	H, J, K	B, D, F	S	P, R	DAL, IRC
RN^50@3612%&	36,100	1/20	C, N	H, J, K	B, D	S	P, R	DAL, IRC
RN^50@3652%&	36,500	1/20	C, N	H, J, K	B, D, F	S	P, R	DAL, IRC
RN^50@3702%&	37,000	1/20	C, N	H, J, K	B, D	S	P, R	DAL, IRC
RN^50@3742%&	37,400	1/20	C, N	H, J, K	B, D, F	S	P, R	DAL, IRC
RN^50@3792%&	37,900	1/20	C, N	H, J, K	B, D	S	P, R	DAL, IRC
RN^50@3832%&	38,300	1/20	C, N	H, J, K	B, D, F	S	P, R	DAL, IRC
RN^50@3882%&	38,800	1/20	C, N	H, J, K	B, D	S	P, R	DAL, IRC
RN^50@3922%&	39,200	1/20	C, N	H, J, K	B, D, F	S	P, R	DAL, IRC
RN^50@3972%&	39,700	1/20	C, N	H, J, K	B, D	S	P, R	DAL, IRC
RN^50@4022%&	40,200	1/20	C, N	H, J, K	B, D, F	S	P, R	DAL, IRC
RN^50@4072%&	40,700	1/20	C, N	H, J, K	B, D	S	P, R	DAL, IRC
RN^50@4122%&	41,200	1/20	C, N	H, J, K	B, D, F	S	P, R	DAL, IRC
RN^50@4172%&	41,700	1/20	C, N	H, J, K	B, D	S	P, R	DAL, IRC
RN^50@4222%&	42,200	1/20	C, N	H, J, K	B, D, F	S	P, R	DAL, IRC
RN^50@4272%&	42,700	1/20	C, N	H, J, K	B, D	S	P, R	DAL, IRC
RN^50@4322%&	43,200	1/20	C, N	H, J, K	B, D, F	S	P, R	DAL, IRC
RN^50@4372%&	43,700	1/20	C, N	H, J, K	B, D	S	P, R	DAL, IRC
RN^50@4422%&	44,200	1/20	C, N	H, J, K	B, D, F	S	P, R	DAL, IRC
RN^50@4482%&	44,800	1/20	C, N	H, J, K	B, D	S	P, R	DAL, IRC
RN^50@4532%&	45,300	1/20	C, N	H, J, K	B, D, F	S	P, R	DAL, IRC
RN^50@4592%&	45,900	1/20	C, N	H, J, K	B, D	S	P, R	DAL, IRC
RN^50@4642%&	46,400	1/20	C, N	H, J, K	B, D, F	S	P, R	DAL, IRC
RN^50@4702%&	47,000	1/20	C, N	H, J, K	B, D	S	P, R	DAL, IRC
RN^50@4752%&	47,500	1/20	C, N	H, J, K	B, D, F	S	P, R	DAL, IRC

RN^50@4812%&	48,100	1/20	C, N	H, J, K	B, D	S	P, R	DAL, IRC
RN^50@4872%&	48,700	1/20	C, N	H, J, K	B, D, F	S	P, R	DAL, IRC
RN^50@4932%&	49,300	1/20	C, N	H, J, K	B, D	S	P, R	DAL, IRC
RN^50@4992%&	49,900	1/20	C, N	H, J, K	B, D, F	S	P, R	DAL, IRC
RN^50@5052%&	50,500	1/20	C, N	H, J, K	B, D	S	P, R	DAL, IRC
RN^50@5112%&	51,100	1/20	C, N	H, J, K	B, D, F	S	P, R	DAL, IRC
RN^50@5172%&	51,700	1/20	C, N	H, J, K	B, D	S	P, R	DAL, IRC
RN^50@5232%&	52,300	1/20	C, N	H, J, K	B, D, F	S	P, R	DAL, IRC
RN^50@5302%&	53,000	1/20	C, N	H, J, K	B, D	S	P, R	DAL, IRC
RN^50@5362%&	53,600	1/20	C, N	H, J, K	B, D, F	S	P, R	DAL, IRC
RN^50@5422%&	54,200	1/20	C, N	H, J, K	B, D	S	P, R	DAL, IRC
RN^50@5492%&	54,900	1/20	C, N	H, J, K	B, D, F	S	P, R	DAL, IRC
RN^50@5562%&	55,600	1/20	C, N	H, J, K	B, D	S	P, R	DAL, IRC
RN^50@5622%&	56,200	1/20	C, N	H, J, K	B, D, F	S	P, R	DAL, IRC
RN^50@5692%&	56,900	1/20	C, N	H, J, K	B, D	S	P, R	DAL, IRC
RN^50@5762%&	57,600	1/20	C, N	H, J, K	B, D, F	S	P, R	DAL, IRC
RN^50@5832%&	58,300	1/20	C, N	H, J, K	B, D	S	P, R	DAL, IRC
RN^50@5902%&	59,000	1/20	C, N	H, J, K	B, D, F	S	P, R	DAL, IRC
RN^50@5972%&	59,700	1/20	C, N	H, J, K	B, D	S	P, R	DAL, IRC
RN^50@6042%&	60,400	1/20	C, N	H, J, K	B, D, F	S	P, R	DAL, IRC
RN^50@6122%&	61,200	1/20	C, N	H, J, K	B, D	S	P, R	DAL, IRC
RN^50@6192%&	61,900	1/20	C, N	H, J, K	B, D, F	S	P, R	DAL, IRC
RN^50@6262%&	62,600	1/20	C, N	H, J, K	B, D	S	P, R	DAL, IRC
RN^50@6342%&	63,400	1/20	C, N	H, J, K	B, D, F	S	P, R	DAL, IRC
RN^50@6422%&	64,200	1/20	C, N	H, J, K	B, D	S	P, R	DAL, IRC
RN^50@6492%&	64,900	1/20	C, N	H, J, K	B, D, F	S	P, R	DAL, IRC
RN^50@6572%&	65,700	1/20	C, N	H, J, K	B, D	S	P, R	DAL, IRC
RN^50@6652%&	66,500	1/20	C, N	H, J, K	B, D, F	S	P, R	DAL, IRC
RN^50@6732%&	67,300	1/20	C, N	H, J, K	B, D	S	P, R	DAL, IRC
RN^50@6812%&	68,100	1/20	C, N	H, J, K	B, D, F	S	P, R	DAL, IRC
RN^50@6902%&	69,000	1/20	C, N	H, J, K	B, D	S	P, R	DAL, IRC
RN^50@6982%&	69,800	1/20	C, N	H, J, K	B, D, F	S	P, R	DAL, IRC
RN^50@7062%&	70,600	1/20	C, N	H, J, K	B, D	S	P, R	DAL, IRC
RN^50@7152%&	71,500	1/20	C, N	H, J, K	B, D, F	S	P, R	DAL, IRC
RN^50@7232%&	72,300	1/20	C, N	H, J, K	B, D	S	P, R	DAL, IRC
RN^50@7322%&	73,200	1/20	C, N	H, J, K	B, D, F	S	P, R	DAL, IRC
RN^50@7412%&	74,100	1/20	C, N	H, J, K	B, D	S	P, R	DAL, IRC
RN^50@7502%&	75,000	1/20	C, N	H, J, K	B, D, F	S	P, R	DAL, IRC
RN^50@7592%&	75,900	1/20	C, N	H, J, K	B, D	S	P, R	DAL, IRC
RN^50@7682%&	76,800	1/20	C, N	H, J, K	B, D, F	S	P, R	DAL, IRC
RN^50@7772%&	77,700	1/20	C, N	H, J, K	B, D	S	P, R	DAL, IRC
RN^50@7872%&	78,700	1/20	C, N	H, J, K	B, D, F	S	P, R	DAL, IRC
RN^50@7962%&	79,600	1/20	C, N	H, J, K	B, D	S	P, R	DAL, IRC
RN^50@8062%&	80,600	1/20	C, N	H, J, K	B, D, F	S	P, R	DAL, IRC
RN^50@8162%&	81,600	1/20	C, N	H, J, K	B, D	S	P, R	DAL, IRC
RN^50@8252%&	82,500	1/20	C, N	H, J, K	B, D, F	S	P, R	DAL, IRC
RN^50@8352%&	83,500	1/20	C, N	H, J, K	B, D	S	P, R	DAL, IRC

RN^50@8452%&	84,500	1/20	C, N	H, J, K	B, D, F	S	P, R	DAL, IRC
RN^50@8562%&	85,600	1/20	C, N	H, J, K	B, D	S	P, R	DAL, IRC
RN^50@8662%&	86,600	1/20	C, N	H, J, K	B, D, F	S	P, R	DAL, IRC
RN^50@8762%&	87,600	1/20	C, N	H, J, K	B, D	S	P, R	DAL, IRC
RN^50@8872%&	88,700	1/20	C, N	H, J, K	B, D, F	S	P, R	DAL, IRC
RN^50@8982%&	89,800	1/20	C, N	H, J, K	B, D	S	P, R	DAL, IRC
RN^50@9092%&	90,900	1/20	C, N	H, J, K	B, D, F	S	P, R	DAL, IRC
RN^50@9202%&	92,000	1/20	C, N	H, J, K	B, D	S	P, R	DAL, IRC
RN^50@9312%&	93,100	1/20	C, N	H, J, K	B, D, F	S	P, R	DAL, IRC
RN^50@9422%&	94,200	1/20	C, N	H, J, K	B, D	S	P, R	DAL, IRC
RN^50@9532%&	95,300	1/20	C, N	H, J, K	B, D, F	S	P, R	DAL, IRC
RN^50@9652%&	96,500	1/20	C, N	H, J, K	B, D	S	P, R	DAL, IRC
RN^50@9762%&	97,600	1/20	C, N	H, J, K	B, D, F	S	P, R	DAL, IRC
RN^50@9882%&	98,800	1/20	C, N	H, J, K	B, D	S	P, R	DAL, IRC
RN^50@1003%&	100,000	1/20	C, N	H, J, K	B, D, F	S	P, R	DAL, IRC
RN^50@1013%&	101,000	1/20	C, N	H, J, K	B, D	S	P, R	DAL, IRC
RN^50@1023%&	102,000	1/20	C, N	H, J, K	B, D, F	S	P, R	DAL, IRC
RN^50@1043%&	104,000	1/20	C, N	H, J, K	B, D	S	P, R	DAL, IRC
RN^50@1053%&	105,000	1/20	C, N	H, J, K	B, D, F	S	P, R	DAL, IRC
RN^50@1063%&	106,000	1/20	C, N	H, J, K	B, D	S	P, R	DAL, IRC
RN^50@1073%&	107,000	1/20	C, N	H, J, K	B, D, F	S	P, R	DAL, IRC
RN^50@1093%&	109,000	1/20	C, N	H, J, K	B, D	S	P, R	DAL, IRC
RN^50@1103%&	110,000	1/20	C, N	H, J, K	B, D, F	S	P, R	DAL, IRC
RN^50@1113%&	111,000	1/20	C, N	H, J, K	B, D	S	P, R	DAL, IRC
RN^50@1133%&	113,000	1/20	C, N	H, J, K	B, D, F	S	P, R	DAL, IRC
RN^50@1143%&	114,000	1/20	C, N	H, J, K	B, D	S	P, R	DAL, IRC
RN^50@1153%&	115,000	1/20	C, N	H, J, K	B, D, F	S	P, R	DAL, IRC
RN^50@1173%&	117,000	1/20	C, N	H, J, K	B, D	S	P, R	DAL, IRC
RN^50@1183%&	118,000	1/20	C, N	H, J, K	B, D, F	S	P, R	DAL, IRC
RN^50@1203%&	120,000	1/20	C, N	H, J, K	B, D	S	P, R	DAL, IRC
RN^50@1213%&	121,000	1/20	C, N	H, J, K	B, D, F	S	P, R	DAL, IRC
RN^50@1233%&	123,000	1/20	C, N	H, J, K	B, D	S	P, R	DAL, IRC
RN^50@1243%&	124,000	1/20	C, N	H, J, K	B, D, F	S	P, R	DAL, IRC
RN^50@1263%&	126,000	1/20	C, N	H, J, K	B, D	S	P, R	DAL, IRC
RN^50@1273%&	127,000	1/20	C, N	H, J, K	B, D, F	S	P, R	DAL, IRC
RN^50@1293%&	129,000	1/20	C, N	H, J, K	B, D	S	P, R	DAL, IRC
RN^50@1303%&	130,000	1/20	C, N	H, J, K	B, D, F	S	P, R	DAL, IRC
RN^50@1323%&	132,000	1/20	C, N	H, J, K	B, D	S	P, R	DAL, IRC
RN^50@1333%&	133,000	1/20	C, N	H, J, K	B, D, F	S	P, R	DAL, IRC
RN^50@1353%&	135,000	1/20	C, N	H, J, K	B, D	S	P, R	DAL, IRC
RN^50@1373%&	137,000	1/20	C, N	H, J, K	B, D, F	S	P, R	DAL, IRC
RN^50@1383%&	138,000	1/20	C, N	H, J, K	B, D	S	P, R	DAL, IRC
RN^50@1403%&	140,000	1/20	C, N	H, J, K	B, D, F	S	P, R	DAL, IRC
RN^50@1423%&	142,000	1/20	C, N	H, J, K	B, D	S	P, R	DAL, IRC
RN^50@1433%&	143,000	1/20	C, N	H, J, K	B, D, F	S	P, R	DAL, IRC
RN^50@1453%&	145,000	1/20	C, N	H, J, K	B, D	S	P, R	DAL, IRC
RN^50@1473%&	147,000	1/20	C, N	H, J, K	B, D, F	S	P, R	DAL, IRC

RN^50@1493%&	149,000	1/20	C, N	H, J, K	B, D	S	P, R	DAL, IRC
RN^50@1503%&	150,000	1/20	C, N	H, J, K	B, D, F	S	P, R	DAL, IRC
RN^50@1523%&	152,000	1/20	C, N	H, J, K	B, D	S	P, R	DAL, IRC
RN^50@1543%&	154,000	1/20	C, N	H, J, K	B, D, F	S	P, R	DAL, IRC
RN^50@1563%&	156,000	1/20	C, N	H, J, K	B, D	S	P, R	DAL, IRC
RN^50@1583%&	158,000	1/20	C, N	H, J, K	B, D, F	S	P, R	DAL, IRC
RN^50@1603%&	160,000	1/20	C, N	H, J, K	B, D	S	P, R	DAL, IRC
RN^50@1623%&	162,000	1/20	C, N	H, J, K	B, D, F	S	P, R	DAL, IRC
RN^50@1643%&	164,000	1/20	C, N	H, J, K	B, D	S	P, R	DAL, IRC
RN^50@1653%&	165,000	1/20	C, N	H, J, K	B, D, F	S	P, R	DAL, IRC
RN^50@1673%&	167,000	1/20	C, N	H, J, K	B, D	S	P, R	DAL, IRC
RN^50@1693%&	169,000	1/20	C, N	H, J, K	B, D, F	S	P, R	DAL, IRC
RN^50@1723%&	172,000	1/20	C, N	H, J, K	B, D	S	P, R	DAL, IRC
RN^50@1743%&	174,000	1/20	C, N	H, J, K	B, D, F	S	P, R	DAL, IRC
RN^50@1763%&	176,000	1/20	C, N	H, J, K	B, D	S	P, R	DAL, IRC
RN^50@1783%&	178,000	1/20	C, N	H, J, K	B, D, F	S	P, R	DAL, IRC
RN^50@1803%&	180,000	1/20	C, N	H, J, K	B, D	S	P, R	DAL, IRC
RN^50@1823%&	182,000	1/20	C, N	H, J, K	B, D, F	S	P, R	DAL, IRC
RN^50@1843%&	184,000	1/20	C, N	H, J, K	B, D	S	P, R	DAL, IRC
RN^50@1873%&	187,000	1/20	C, N	H, J, K	B, D, F	S	P, R	DAL, IRC
RN^50@1893%&	189,000	1/20	C, N	H, J, K	B, D	S	P, R	DAL, IRC
RN^50@1913%&	191,000	1/20	C, N	H, J, K	B, D, F	S	P, R	DAL, IRC
RN^50@1933%&	193,000	1/20	C, N	H, J, K	B, D	S	P, R	DAL, IRC
RN^50@1963%&	196,000	1/20	C, N	H, J, K	B, D, F	S	P, R	DAL, IRC
RN^50@1983%&	198,000	1/20	C, N	H, J, K	B, D	S	P, R	DAL, IRC
RN^50@2003%&	200,000	1/20	C, N	H, J, K	B, D, F	S	P, R	DAL, IRC
RN^50@2033%&	203,000	1/20	C, N	H, J, K	B, D	S	P, R	DAL, IRC
RN^50@2053%&	205,000	1/20	C, N	H, J, K	B, D, F	S	P, R	DAL, IRC
RN^50@2083%&	208,000	1/20	C, N	H, J, K	B, D	S	P, R	DAL, IRC
RN^50@2103%&	210,000	1/20	C, N	H, J, K	B, D, F	S	P, R	DAL, IRC
RN^50@2133%&	213,000	1/20	C, N	H, J, K	B, D	S	P, R	DAL, IRC
RN^50@2153%&	215,000	1/20	C, N	H, J, K	B, D, F	S	P, R	DAL, IRC
RN^50@2183%&	218,000	1/20	C, N	H, J, K	B, D	S	P, R	DAL, IRC
RN^50@2213%&	221,000	1/20	C, N	H, J, K	B, D, F	S	P, R	DAL, IRC
RN^50@2233%&	223,000	1/20	C, N	H, J, K	B, D	S	P, R	DAL, IRC
RN^50@2263%&	226,000	1/20	C, N	H, J, K	B, D, F	S	P, R	DAL, IRC
RN^50@2293%&	229,000	1/20	C, N	H, J, K	B, D	S	P, R	DAL, IRC
RN^50@2323%&	232,000	1/20	C, N	H, J, K	B, D, F	S	P, R	DAL, IRC
RN^50@2343%&	234,000	1/20	C, N	H, J, K	B, D	S	P, R	DAL, IRC
RN^50@2373%&	237,000	1/20	C, N	H, J, K	B, D, F	S	P, R	DAL, IRC
RN^50@2403%&	240,000	1/20	C, N	H, J, K	B, D	S	P, R	DAL, IRC
RN^50@2433%&	243,000	1/20	C, N	H, J, K	B, D, F	S	P, R	DAL, IRC
RN^50@2463%&	246,000	1/20	C, N	H, J, K	B, D	S	P, R	DAL, IRC
RN^50@2493%&	249,000	1/20	C, N	H, J, K	B, D, F	S	P, R	DAL, IRC
RN^50@2523%&	252,000	1/20	C, N	H, J, K	B, D	S	P, R	DAL, IRC
RN^50@2553%&	255,000	1/20	C, N	H, J, K	B, D, F	S	P, R	DAL, IRC
RN^50@2583%&	258,000	1/20	C, N	H, J, K	B, D	S	P, R	DAL, IRC

RN^50@2613%&	261,000	1/20	C, N	H, J, K	B, D, F	S	P, R	DAL, IRC
RN^50@2643%&	264,000	1/20	C, N	H, J, K	B, D	S	P, R	DAL, IRC
RN^50@2673%&	267,000	1/20	C, N	H, J, K	B, D, F	S	P, R	DAL, IRC
RN^50@2713%&	271,000	1/20	C, N	H, J, K	B, D	S	P, R	DAL, IRC
RN^50@2743%&	274,000	1/20	C, N	H, J, K	B, D, F	S	P, R	DAL, IRC
RN^50@2773%&	277,000	1/20	C, N	H, J, K	B, D	S	P, R	DAL, IRC
RN^50@2803%&	280,000	1/20	C, N	H, J, K	B, D, F	S	P, R	DAL, IRC
RN^50@2843%&	284,000	1/20	C, N	H, J, K	B, D	S	P, R	DAL, IRC
RN^50@2873%&	287,000	1/20	C, N	H, J, K	B, D, F	S	P, R	DAL, IRC
RN^50@2913%&	291,000	1/20	C, N	H, J, K	B, D	S	P, R	DAL, IRC
RN^50@2943%&	294,000	1/20	C, N	H, J, K	B, D, F	S	P, R	DAL, IRC
RN^50@2983%&	298,000	1/20	C, N	H, J, K	B, D	S	P, R	DAL, IRC
RN^50@3013%&	301,000	1/20	C, N	H, J, K	B, D, F	S	P, R	DAL, IRC
RN^50@3053%&	305,000	1/20	C	H, J, K	B, D	S	P, R	DAL
RN^50@3093%&	309,000	1/20	C	H, J, K	B, D, F	S	P, R	DAL
RN^50@3123%&	312,000	1/20	C	H, J, K	B, D	S	P, R	DAL
RN^50@3163%&	316,000	1/20	C	H, J, K	B, D, F	S	P, R	DAL
RN^50@3203%&	320,000	1/20	C	H, J, K	B, D	S	P, R	DAL
RN^50@3243%&	324,000	1/20	C	H, J, K	B, D, F	S	P, R	DAL
RN^50@3283%&	328,000	1/20	C	H, J, K	B, D	S	P, R	DAL
RN^50@3323%&	332,000	1/20	C	H, J, K	B, D, F	S	P, R	DAL
RN^50@3363%&	336,000	1/20	C	H, J, K	B, D	S	P, R	DAL
RN^50@3403%&	340,000	1/20	C	H, J, K	B, D, F	S	P, R	DAL
RN^50@3443%&	344,000	1/20	C	H, J, K	B, D	S	P, R	DAL
RN^50@3483%&	348,000	1/20	C	H, J, K	B, D, F	S	P, R	DAL
RN^50@3523%&	352,000	1/20	C	H, J, K	B, D	S	P, R	DAL
RN^50@3573%&	357,000	1/20	C	H, J, K	B, D, F	S	P, R	DAL
RN^50@3613%&	361,000	1/20	C	H, J, K	B, D	S	P, R	DAL
RN^50@3653%&	365,000	1/20	C	H, J, K	B, D, F	S	P, R	DAL
RN^50@3703%&	370,000	1/20	C	H, J, K	B, D	S	P, R	DAL
RN^50@3743%&	374,000	1/20	C	H, J, K	B, D, F	S	P, R	DAL
RN^50@3793%&	379,000	1/20	C	H, J, K	B, D	S	P, R	DAL
RN^50@3833%&	383,000	1/20	C	H, J, K	B, D, F	S	P, R	DAL
RN^50@3883%&	388,000	1/20	C	H, J, K	B, D	S	P, R	DAL
RN^50@3923%&	392,000	1/20	C	H, J, K	B, D, F	S	P, R	DAL
RN^50@3973%&	397,000	1/20	C	H, J, K	B, D	S	P, R	DAL
RN^50@4023%&	402,000	1/20	C	H, J, K	B, D, F	S	P, R	DAL
RN^50@4073%&	407,000	1/20	C	H, J, K	B, D	S	P, R	DAL
RN^50@4123%&	412,000	1/20	C	H, J, K	B, D, F	S	P, R	DAL
RN^50@4173%&	417,000	1/20	C	H, J, K	B, D	S	P, R	DAL
RN^50@4223%&	422,000	1/20	C	H, J, K	B, D, F	S	P, R	DAL
RN^50@4273%&	427,000	1/20	C	H, J, K	B, D	S	P, R	DAL
RN^50@4323%&	432,000	1/20	C	H, J, K	B, D, F	S	P, R	DAL
RN^50@4373%&	437,000	1/20	C	H, J, K	B, D	S	P, R	DAL
RN^50@4423%&	442,000	1/20	C	H, J, K	B, D, F	S	P, R	DAL
RN^50@4483%&	448,000	1/20	C	H, J, K	B, D	S	P, R	DAL
RN^50@4533%&	453,000	1/20	C	H, J, K	B, D, F	S	P, R	DAL

RN^50@4593%&	459,000	1/20	C	H, J, K	B, D	S	P, R	DAL
RN^50@4643%&	464,000	1/20	C	H, J, K	B, D, F	S	P, R	DAL
RN^50@4703%&	470,000	1/20	C	H, J, K	B, D	S	P, R	DAL
RN^50@4753%&	475,000	1/20	C	H, J, K	B, D, F	S	P, R	DAL
RN^50@4813%&	481,000	1/20	C	H, J, K	B, D	S	P, R	DAL
RN^50@4873%&	487,000	1/20	C	H, J, K	B, D, F	S	P, R	DAL
RN^50@4933%&	493,000	1/20	C	H, J, K	B, D	S	P, R	DAL
RN^50@4993%&	499,000	1/20	C	H, J, K	B, D, F	S	P, R	DAL
RN^50@5053%&	505,000	1/20	C	H, J, K	B, D	S	P, R	DAL
RN^50@5113%&	511,000	1/20	C	H, J, K	B, D, F	S	P, R	DAL
RN^50@5173%&	517,000	1/20	C	H, J, K	B, D	S	P, R	DAL
RN^50@5233%&	523,000	1/20	C	H, J, K	B, D, F	S	P, R	DAL
RN^50@5303%&	530,000	1/20	C	H, J, K	B, D	S	P, R	DAL
RN^50@5363%&	536,000	1/20	C	H, J, K	B, D, F	S	P, R	DAL
RN^50@5423%&	542,000	1/20	C	H, J, K	B, D	S	P, R	DAL
RN^50@5493%&	549,000	1/20	C	H, J, K	B, D, F	S	P, R	DAL
RN^50@5563%&	556,000	1/20	C	H, J, K	B, D	S	P, R	DAL
RN^50@5623%&	562,000	1/20	C	H, J, K	B, D, F	S	P, R	DAL
RN^50@5693%&	569,000	1/20	C	H, J, K	B, D	S	P, R	DAL
RN^50@5763%&	576,000	1/20	C	H, J, K	B, D, F	S	P, R	DAL
RN^50@5833%&	583,000	1/20	C	H, J, K	B, D	S	P, R	DAL
RN^50@5903%&	590,000	1/20	C	H, J, K	B, D, F	S	P, R	DAL
RN^50@5973%&	597,000	1/20	C	H, J, K	B, D	S	P, R	DAL
RN^50@6043%&	604,000	1/20	C	H, J, K	B, D, F	S	P, R	DAL
RN^50@6123%&	612,000	1/20	C	H, J, K	B, D	S	P, R	DAL
RN^50@6193%&	619,000	1/20	C	H, J, K	B, D, F	S	P, R	DAL
RN^50@6263%&	626,000	1/20	C	H, J, K	B, D	S	P, R	DAL
RN^50@6343%&	634,000	1/20	C	H, J, K	B, D, F	S	P, R	DAL
RN^50@6423%&	642,000	1/20	C	H, J, K	B, D	S	P, R	DAL
RN^50@6493%&	649,000	1/20	C	H, J, K	B, D, F	S	P, R	DAL
RN^50@6573%&	657,000	1/20	C	H, J, K	B, D	S	P, R	DAL
RN^50@6653%&	665,000	1/20	C	H, J, K	B, D, F	S	P, R	DAL
RN^50@6733%&	673,000	1/20	C	H, J, K	B, D	S	P, R	DAL
RN^50@6813%&	681,000	1/20	C	H, J, K	B, D, F	S	P, R	DAL
RN^50@6903%&	690,000	1/20	C	H, J, K	B, D	S	P, R	DAL
RN^50@6983%&	698,000	1/20	C	H, J, K	B, D, F	S	P, R	DAL
RN^50@7063%&	706,000	1/20	C	H, J, K	B, D	S	P, R	DAL
RN^50@7153%&	715,000	1/20	C	H, J, K	B, D, F	S	P, R	DAL
RN^50@7233%&	723,000	1/20	C	H, J, K	B, D	S	P, R	DAL
RN^50@7323%&	732,000	1/20	C	H, J, K	B, D, F	S	P, R	DAL
RN^50@7413%&	741,000	1/20	C	H, J, K	B, D	S	P, R	DAL
RN^50@7503%&	750,000	1/20	C	H, J, K	B, D, F	S	P, R	DAL
RN^50@7593%&	759,000	1/20	C	H, J, K	B, D	S	P, R	DAL
RN^50@7683%&	768,000	1/20	C	H, J, K	B, D, F	S	P, R	DAL
RN^50@7773%&	777,000	1/20	C	H, J, K	B, D	S	P, R	DAL
RN^50@7873%&	787,000	1/20	C	H, J, K	B, D, F	S	P, R	DAL
RN^50@7963%&	796,000	1/20	C	H, J, K	B, D	S	P, R	DAL

RN^50 RESISTORS DECADE BREAKDOWN

Click on the link below to see the associated parts selection listing:

Resistance Range
10.0 Ohms through 98.8 Ohms
100 Ohms through 988 Ohms
1,000 Ohms through 9,880 Ohms
10,000 Ohms through 98,800 Ohms
100,000 Ohms through 796,000 Ohms

RN^50 Film Resistors: 10.0 Ohms through 98.8 Ohms

	Resistance	Power	Term.	Char.	Resistance	Level 1	Level 2	
Part Number	Value (Ohms)	Rating (W)	Type (^)	(@)	Tolerance (%)	(FRL) (&)	(FRL) (&)	Manufacturer
RN^50@10R0%&	10.0	1/20	C, N	H, J, K	B, D, F	S	P, R	DAL, IRC
RN^50@10R1%&	10.1	1/20	C, N	H, J, K	B, D	S	P, R	DAL, IRC
RN^50@10R2%&	10.2	1/20	C, N	H, J, K	B, D, F	S	P, R	DAL, IRC
RN^50@10R4%&	10.4	1/20	C, N	H, J, K	B, D	S	P, R	DAL, IRC
RN^50@10R5%&	10.5	1/20	C, N	H, J, K	B, D, F	S	P, R	DAL, IRC
RN^50@10R6%&	10.6	1/20	C, N	H, J, K	B, D	S	P, R	DAL, IRC
RN^50@10R7%&	10.7	1/20	C, N	H, J, K	B, D, F	S	P, R	DAL, IRC
	Resistance	Power	Term.	Char.	Resistance	Level 1	Level 2	
Part Number	Value (Ohms)	Rating (W)	Type (^)	(@)	Tolerance (%)	(FRL) (&)	(FRL) (&)	Manufacturer
RN^50@10R9%&	10.9	1/20	C, N	H, J, K	B, D	S	P, R	DAL, IRC
RN^50@11R0%&	11.0	1/20	C, N	H, J, K	B, D, F	S	P, R	DAL, IRC
RN^50@11R1%&	11.1	1/20	C, N	H, J, K	B, D	S	P, R	DAL, IRC
RN^50@11R3%&	11.3	1/20	C, N	H, J, K	B, D, F	S	P, R	DAL, IRC
RN^50@11R4%&	11.4	1/20	C, N	H, J, K	B, D	S	P, R	DAL, IRC
RN^50@11R5%&	11.5	1/20	C, N	H, J, K	B, D, F	S	P, R	DAL, IRC
RN^50@11R7%&	11.7	1/20	C, N	H, J, K	B, D	S	P, R	DAL, IRC
	Resistance	Power	Term.	Char.	Resistance	Level 1	Level 2	
Part Number	Value (Ohms)	Rating (W)	Type (^)	(@)	Tolerance (%)	(FRL) (&)	(FRL) (&)	Manufacturer
RN^50@11R8%&	11.8	1/20	C, N	H, J, K	B, D, F	S	P, R	DAL, IRC
RN^50@12R0%&	12.0	1/20	C, N	H, J, K	B, D	S	P, R	DAL, IRC
RN^50@12R1%&	12.1	1/20	C, N	H, J, K	B, D, F	S	P, R	DAL, IRC
RN^50@12R3%&	12.3	1/20	C, N	H, J, K	B, D	S	P, R	DAL, IRC
RN^50@12R4%&	12.4	1/20	C, N	H, J, K	B, D, F	S	P, R	DAL, IRC
RN^50@12R6%&	12.6	1/20	C, N	H, J, K	B, D	S	P, R	DAL, IRC
RN^50@12R7%&	12.7	1/20	C, N	H, J, K	B, D, F	S	P, R	DAL, IRC
	Resistance	Power	Term.	Char.	Resistance	Level 1	Level 2	
Part Number	Value (Ohms)	Rating (W)	Type (^)	(@)	Tolerance (%)	(FRL) (&)	(FRL) (&)	Manufacturer
RN^50@12R9%&	12.9	1/20	C, N	H, J, K	B, D	S	P, R	DAL, IRC
RN^50@13R0%&	13.0	1/20	C, N	H, J, K	B, D, F	S	P, R	DAL, IRC

RN^50@13R2%&	13.2	1/20	C, N	H, J, K	B, D	S	P, R	DAL, IRC
RN^50@13R3%&	13.3	1/20	C, N	H, J, K	B, D, F	S	P, R	DAL, IRC
RN^50@13R5%&	13.5	1/20	C, N	H, J, K	B, D	S	P, R	DAL, IRC
RN^50@13R7%&	13.7	1/20	C, N	H, J, K	B, D, F	S	P, R	DAL, IRC
RN^50@13R8%&	13.8	1/20	C, N	H, J, K	B, D	S	P, R	DAL, IRC
	Resistance	Power	Term.	Char.	Resistance	Level 1	Level 2	
Part Number	Value (Ohms)	Rating (W)	Type (^)	(@)	Tolerance (%)	(FRL) (&)	(FRL) (&)	Manufacturer
RN^50@14R0%&	14.0	1/20	C, N	H, J, K	B, D, F	S	P, R	DAL, IRC
RN^50@14R2%&	14.2	1/20	C, N	H, J, K	B, D	S	P, R	DAL, IRC
RN^50@14R3%&	14.3	1/20	C, N	H, J, K	B, D, F	S	P, R	DAL, IRC
RN^50@14R5%&	14.5	1/20	C, N	H, J, K	B, D	S	P, R	DAL, IRC
RN^50@14R7%&	14.7	1/20	C, N	H, J, K	B, D, F	S	P, R	DAL, IRC
RN^50@14R9%&	14.9	1/20	C, N	H, J, K	B, D	S	P, R	DAL, IRC
RN^50@15R0%&	15.0	1/20	C, N	H, J, K	B, D, F	S	P, R	DAL, IRC
	Resistance	Power	Term.	Char.	Resistance	Level 1	Level 2	
Part Number	Value (Ohms)	Rating (W)	Type (^)	(@)	Tolerance (%)	(FRL) (&)	(FRL) (&)	Manufacturer
RN^50@15R2%&	15.2	1/20	C, N	H, J, K	B, D	S	P, R	DAL, IRC
RN^50@15R4%&	15.4	1/20	C, N	H, J, K	B, D, F	S	P, R	DAL, IRC
RN^50@15R6%&	15.6	1/20	C, N	H, J, K	B, D	S	P, R	DAL, IRC
RN^50@15R8%&	15.8	1/20	C, N	H, J, K	B, D, F	S	P, R	DAL, IRC
RN^50@16R0%&	16.0	1/20	C, N	H, J, K	B, D	S	P, R	DAL, IRC
RN^50@16R2%&	16.2	1/20	C, N	H, J, K	B, D, F	S	P, R	DAL, IRC
RN^50@16R4%&	16.4	1/20	C, N	H, J, K	B, D	S	P, R	DAL, IRC
	Resistance	Power	Term.	Char.	Resistance	Level 1	Level 2	
Part Number	Value (Ohms)	Rating (W)	Type (^)	(@)	Tolerance (%)	(FRL) (&)	(FRL) (&)	Manufacturer
RN^50@16R5%&	16.5	1/20	C, N	H, J, K	B, D, F	S	P, R	DAL, IRC
RN^50@16R7%&	16.7	1/20	C, N	H, J, K	B, D	S	P, R	DAL, IRC
RN^50@16R9%&	16.9	1/20	C, N	H, J, K	B, D, F	S	P, R	DAL, IRC
RN^50@17R2%&	17.2	1/20	C, N	H, J, K	B, D	S	P, R	DAL, IRC
RN^50@17R4%&	17.4	1/20	C, N	H, J, K	B, D, F	S	P, R	DAL, IRC
RN^50@17R6%&	17.6	1/20	C, N	H, J, K	B, D	S	P, R	DAL, IRC
RN^50@17R8%&	17.8	1/20	C, N	H, J, K	B, D, F	S	P, R	DAL, IRC
	Resistance	Power	Term.	Char.	Resistance	Level 1	Level 2	
Part Number	Value (Ohms)	Rating (W)	Type (^)	(@)	Tolerance (%)	(FRL) (&)	(FRL) (&)	Manufacturer
RN^50@18R0%&	18.0	1/20	C, N	H, J, K	B, D	S	P, R	DAL, IRC
RN^50@18R2%&	18.2	1/20	C, N	H, J, K	B, D, F	S	P, R	DAL, IRC
RN^50@18R4%&	18.4	1/20	C, N	H, J, K	B, D	S	P, R	DAL, IRC
RN^50@18R7%&	18.7	1/20	C, N	H, J, K	B, D, F	S	P, R	DAL, IRC
RN^50@18R9%&	18.9	1/20	C, N	H, J, K	B, D	S	P, R	DAL, IRC
RN^50@19R1%&	19.1	1/20	C, N	H, J, K	B, D, F	S	P, R	DAL, IRC
RN^50@19R3%&	19.3	1/20	C, N	H, J, K	B, D	S	P, R	DAL, IRC
	Resistance	Power	Term.	Char.	Resistance	Level 1	Level 2	
Part Number	Value (Ohms)	Rating (W)	Type (^)	(@)	Tolerance (%)	(FRL) (&)	(FRL) (&)	Manufacturer
RN^50@19R6%&	19.6	1/20	C, N	H, J, K	B, D, F	S	P, R	DAL, IRC
RN^50@19R8%&	19.8	1/20	C, N	H, J, K	B, D	S	P, R	DAL, IRC
RN^50@20R0%&	20.0	1/20	C, N	H, J, K	B, D, F	S	P, R	DAL, IRC
RN^50@20R3%&	20.3	1/20	C, N	H, J, K	B, D	S	P, R	DAL, IRC

RN^50@20R5%&	20.5	1/20	C, N	H, J, K	B, D, F	S	P, R	DAL, IRC
RN^50@20R8%&	20.8	1/20	C, N	H, J, K	B, D	S	P, R	DAL, IRC
RN^50@21R0%&	21.0	1/20	C, N	H, J, K	B, D, F	S	P, R	DAL, IRC
	Resistance	Power	Term.	Char.	Resistance	Level 1	Level 2	
Part Number	Value (Ohms)	Rating (W)	Type (^)	(@)	Tolerance (%)	(FRL) (&)	(FRL) (&)	Manufacturer
RN^50@21R3%&	21.3	1/20	C, N	H, J, K	B, D	S	P, R	DAL, IRC
RN^50@21R5%&	21.5	1/20	C, N	H, J, K	B, D, F	S	P, R	DAL, IRC
RN^50@21R8%&	21.8	1/20	C, N	H, J, K	B, D	S	P, R	DAL, IRC
RN^50@22R1%&	22.1	1/20	C, N	H, J, K	B, D, F	S	P, R	DAL, IRC
RN^50@22R3%&	22.3	1/20	C, N	H, J, K	B, D	S	P, R	DAL, IRC
RN^50@22R6%&	22.6	1/20	C, N	H, J, K	B, D, F	S	P, R	DAL, IRC
RN^50@22R9%&	22.9	1/20	C, N	H, J, K	B, D	S	P, R	DAL, IRC
	Resistance	Power	Term.	Char.	Resistance	Level 1	Level 2	
Part Number	Value (Ohms)	Rating (W)	Type (^)	(@)	Tolerance (%)	(FRL) (&)	(FRL) (&)	Manufacturer
RN^50@23R2%&	23.2	1/20	C, N	H, J, K	B, D, F	S	P, R	DAL, IRC
RN^50@23R4%&	23.4	1/20	C, N	H, J, K	B, D	S	P, R	DAL, IRC
RN^50@23R7%&	23.7	1/20	C, N	H, J, K	B, D, F	S	P, R	DAL, IRC
RN^50@24R0%&	24.0	1/20	C, N	H, J, K	B, D	S	P, R	DAL, IRC
RN^50@24R3%&	24.3	1/20	C, N	H, J, K	B, D, F	S	P, R	DAL, IRC
RN^50@24R6%&	24.6	1/20	C, N	H, J, K	B, D	S	P, R	DAL, IRC
RN^50@24R9%&	24.9	1/20	C, N	H, J, K	B, D, F	S	P, R	DAL, IRC
	Resistance	Power	Term.	Char.	Resistance	Level 1	Level 2	
Part Number	Value (Ohms)	Rating (W)	Type (^)	(@)	Tolerance (%)	(FRL) (&)	(FRL) (&)	Manufacturer
RN^50@25R2%&	25.2	1/20	C, N	H, J, K	B, D	S	P, R	DAL, IRC
RN^50@25R5%&	25.5	1/20	C, N	H, J, K	B, D, F	S	P, R	DAL, IRC
RN^50@25R8%&	25.8	1/20	C, N	H, J, K	B, D	S	P, R	DAL, IRC
RN^50@26R1%&	26.1	1/20	C, N	H, J, K	B, D, F	S	P, R	DAL, IRC
RN^50@26R4%&	26.4	1/20	C, N	H, J, K	B, D	S	P, R	DAL, IRC
RN^50@26R7%&	26.7	1/20	C, N	H, J, K	B, D, F	S	P, R	DAL, IRC
RN^50@27R1%&	27.1	1/20	C, N	H, J, K	B, D	S	P, R	DAL, IRC
	Resistance	Power	Term.	Char.	Resistance	Level 1	Level 2	
Part Number	Value (Ohms)	Rating (W)	Type (^)	(@)	Tolerance (%)	(FRL) (&)	(FRL) (&)	Manufacturer
RN^50@27R4%&	27.4	1/20	C, N	H, J, K	B, D, F	S	P, R	DAL, IRC
RN^50@27R7%&	27.7	1/20	C, N	H, J, K	B, D	S	P, R	DAL, IRC
RN^50@28R0%&	28.0	1/20	C, N	H, J, K	B, D, F	S	P, R	DAL, IRC
RN^50@28R4%&	28.4	1/20	C, N	H, J, K	B, D	S	P, R	DAL, IRC
RN^50@28R7%&	28.7	1/20	C, N	H, J, K	B, D, F	S	P, R	DAL, IRC
RN^50@29R1%&	29.1	1/20	C, N	H, J, K	B, D	S	P, R	DAL, IRC
RN^50@29R4%&	29.4	1/20	C, N	H, J, K	B, D, F	S	P, R	DAL, IRC
	Resistance	Power	Term.	Char.	Resistance	Level 1	Level 2	
Part Number	Value (Ohms)	Rating (W)	Type (^)	(@)	Tolerance (%)	(FRL) (&)	(FRL) (&)	Manufacturer
RN^50@29R8%&	29.8	1/20	C, N	H, J, K	B, D	S	P, R	DAL, IRC
RN^50@30R1%&	30.1	1/20	C, N	H, J, K	B, D, F	S	P, R	DAL, IRC
RN^50@30R5%&	30.5	1/20	C, N	H, J, K	B, D	S	P, R	DAL, IRC
RN^50@30R9%&	30.9	1/20	C, N	H, J, K	B, D, F	S	P, R	DAL, IRC
RN^50@31R2%&	31.2	1/20	C, N	H, J, K	B, D	S	P, R	DAL, IRC
RN^50@31R6%&	31.6	1/20	C, N	H, J, K	B, D, F	S	P, R	DAL, IRC

RN^50@32R0%&	32.0	1/20	C, N	H, J, K	B, D	S	P, R	DAL, IRC
	Resistance	Power	Term.	Char.	Resistance	Level 1	Level 2	
Part Number	Value (Ohms)	Rating (W)	Type (^)	(@)	Tolerance (%)	(FRL) (&)	(FRL) (&)	Manufacturer
RN^50@32R4%&	32.4	1/20	C, N	H, J, K	B, D, F	S	P, R	DAL, IRC
RN^50@32R8%&	32.8	1/20	C, N	H, J, K	B, D	S	P, R	DAL, IRC
RN^50@33R2%&	33.2	1/20	C, N	H, J, K	B, D, F	S	P, R	DAL, IRC
RN^50@33R6%&	33.6	1/20	C, N	H, J, K	B, D	S	P, R	DAL, IRC
RN^50@34R0%&	34.0	1/20	C, N	H, J, K	B, D, F	S	P, R	DAL, IRC
RN^50@34R4%&	34.4	1/20	C, N	H, J, K	B, D	S	P, R	DAL, IRC
RN^50@34R8%&	34.8	1/20	C, N	H, J, K	B, D, F	S	P, R	DAL, IRC
	Resistance	Power	Term.	Char.	Resistance	Level 1	Level 2	
Part Number	Value (Ohms)	Rating (W)	Type (^)	(@)	Tolerance (%)	(FRL) (&)	(FRL) (&)	Manufacturer
RN^50@35R2%&	35.2	1/20	C, N	H, J, K	B, D	S	P, R	DAL, IRC
RN^50@35R7%&	35.7	1/20	C, N	H, J, K	B, D, F	S	P, R	DAL, IRC
RN^50@36R1%&	36.1	1/20	C, N	H, J, K	B, D	S	P, R	DAL, IRC
RN^50@36R5%&	36.5	1/20	C, N	H, J, K	B, D, F	S	P, R	DAL, IRC
RN^50@37R0%&	37.0	1/20	C, N	H, J, K	B, D	S	P, R	DAL, IRC
RN^50@37R4%&	37.4	1/20	C, N	H, J, K	B, D, F	S	P, R	DAL, IRC
RN^50@37R9%&	37.9	1/20	C, N	H, J, K	B, D	S	P, R	DAL, IRC
	Resistance	Power	Term.	Char.	Resistance	Level 1	Level 2	
Part Number	Value (Ohms)	Rating (W)	Type (^)	(@)	Tolerance (%)	(FRL) (&)	(FRL) (&)	Manufacturer
RN^50@38R3%&	38.3	1/20	C, N	H, J, K	B, D, F	S	P, R	DAL, IRC
RN^50@38R8%&	38.8	1/20	C, N	H, J, K	B, D	S	P, R	DAL, IRC
RN^50@39R2%&	39.2	1/20	C, N	H, J, K	B, D, F	S	P, R	DAL, IRC
RN^50@39R7%&	39.7	1/20	C, N	H, J, K	B, D	S	P, R	DAL, IRC
RN^50@40R2%&	40.2	1/20	C, N	H, J, K	B, D, F	S	P, R	DAL, IRC
RN^50@40R7%&	40.7	1/20	C, N	H, J, K	B, D	S	P, R	DAL, IRC
RN^50@41R2%&	41.2	1/20	C, N	H, J, K	B, D, F	S	P, R	DAL, IRC
	Resistance	Power	Term.	Char.	Resistance	Level 1	Level 2	
Part Number	Value (Ohms)	Rating (W)	Type (^)	(@)	Tolerance (%)	(FRL) (&)	(FRL) (&)	Manufacturer
RN^50@41R7%&	41.7	1/20	C, N	H, J, K	B, D	S	P, R	DAL, IRC
RN^50@42R2%&	42.2	1/20	C, N	H, J, K	B, D, F	S	P, R	DAL, IRC
RN^50@42R7%&	42.7	1/20	C, N	H, J, K	B, D	S	P, R	DAL, IRC
RN^50@43R2%&	43.2	1/20	C, N	H, J, K	B, D, F	S	P, R	DAL, IRC
RN^50@43R7%&	43.7	1/20	C, N	H, J, K	B, D	S	P, R	DAL, IRC
RN^50@44R2%&	44.2	1/20	C, N	H, J, K	B, D, F	S	P, R	DAL, IRC
RN^50@44R8%&	44.8	1/20	C, N	H, J, K	B, D	S	P, R	DAL, IRC
	Resistance	Power	Term.	Char.	Resistance	Level 1	Level 2	
Part Number	Value (Ohms)	Rating (W)	Type (^)	(@)	Tolerance (%)	(FRL) (&)	(FRL) (&)	Manufacturer
RN^50@45R3%&	45.3	1/20	C, N	H, J, K	B, D, F	S	P, R	DAL, IRC
RN^50@45R9%&	45.9	1/20	C, N	H, J, K	B, D	S	P, R	DAL, IRC
RN^50@46R4%&	46.4	1/20	C, N	H, J, K	B, D, F	S	P, R	DAL, IRC
RN^50@47R0%&	47.0	1/20	C, N	H, J, K	B, D	S	P, R	DAL, IRC
RN^50@47R5%&	47.5	1/20	C, N	H, J, K	B, D, F	S	P, R	DAL, IRC
RN^50@48R1%&	48.1	1/20	C, N	H, J, K	B, D	S	P, R	DAL, IRC
RN^50@48R7%&	48.7	1/20	C, N	H, J, K	B, D, F	S	P, R	DAL, IRC
	Resistance	Power	Term.	Char.	Resistance	Level 1	Level 2	

Part Number	Value (Ohms)	Rating (W)	Type (^)	(@)	Tolerance (%)	(FRL) (&)	(FRL) (&)	Manufacturer
RN^50@49R3%&	49.3	1/20	C, N	H, J, K	B, D	S	P, R	DAL, IRC
RN^50@49R9%&	49.9	1/20	C, N	H, J, K	B, D, F	S	P, R	DAL, IRC
RN^50@50R5%&	50.5	1/20	C, N	H, J, K	B, D	S	P, R	DAL, IRC
RN^50@51R1%&	51.1	1/20	C, N	H, J, K	B, D, F	S	P, R	DAL, IRC
RN^50@51R7%&	51.7	1/20	C, N	H, J, K	B, D	S	P, R	DAL, IRC
RN^50@52R3%&	52.3	1/20	C, N	H, J, K	B, D, F	S	P, R	DAL, IRC
RN^50@53R0%&	53.0	1/20	C, N	H, J, K	B, D	S	P, R	DAL, IRC
	Resistance	Power	Term.	Char.	Resistance	Level 1	Level 2	
Part Number	Value (Ohms)	Rating (W)	Type (^)	(@)	Tolerance (%)	(FRL) (&)	(FRL) (&)	Manufacturer
RN^50@53R6%&	53.6	1/20	C, N	H, J, K	B, D, F	S	P, R	DAL, IRC
RN^50@54R2%&	54.2	1/20	C, N	H, J, K	B, D	S	P, R	DAL, IRC
RN^50@54R9%&	54.9	1/20	C, N	H, J, K	B, D, F	S	P, R	DAL, IRC
RN^50@55R6%&	55.6	1/20	C, N	H, J, K	B, D	S	P, R	DAL, IRC
RN^50@56R2%&	56.2	1/20	C, N	H, J, K	B, D, F	S	P, R	DAL, IRC
RN^50@56R9%&	56.9	1/20	C, N	H, J, K	B, D	S	P, R	DAL, IRC
RN^50@57R6%&	57.6	1/20	C, N	H, J, K	B, D, F	S	P, R	DAL, IRC
	Resistance	Power	Term.	Char.	Resistance	Level 1	Level 2	
Part Number	Value (Ohms)	Rating (W)	Type (^)	(@)	Tolerance (%)	(FRL) (&)	(FRL) (&)	Manufacturer
RN^50@58R3%&	58.3	1/20	C, N	H, J, K	B, D	S	P, R	DAL, IRC
RN^50@59R0%&	59.0	1/20	C, N	H, J, K	B, D, F	S	P, R	DAL, IRC
RN^50@59R7%&	59.7	1/20	C, N	H, J, K	B, D	S	P, R	DAL, IRC
RN^50@60R4%&	60.4	1/20	C, N	H, J, K	B, D, F	S	P, R	DAL, IRC
RN^50@61R2%&	61.2	1/20	C, N	H, J, K	B, D	S	P, R	DAL, IRC
RN^50@61R9%&	61.9	1/20	C, N	H, J, K	B, D, F	S	P, R	DAL, IRC
RN^50@62R6%&	62.6	1/20	C, N	H, J, K	B, D	S	P, R	DAL, IRC
	Resistance	Power	Term.	Char.	Resistance	Level 1	Level 2	
Part Number	Value (Ohms)	Rating (W)	Type (^)	(@)	Tolerance (%)	(FRL) (&)	(FRL) (&)	Manufacturer
RN^50@63R4%&	63.4	1/20	C, N	H, J, K	B, D, F	S	P, R	DAL, IRC
RN^50@64R2%&	64.2	1/20	C, N	H, J, K	B, D	S	P, R	DAL, IRC
RN^50@64R9%&	64.9	1/20	C, N	H, J, K	B, D, F	S	P, R	DAL, IRC
RN^50@65R7%&	65.7	1/20	C, N	H, J, K	B, D	S	P, R	DAL, IRC
RN^50@66R5%&	66.5	1/20	C, N	H, J, K	B, D, F	S	P, R	DAL, IRC
RN^50@67R3%&	67.3	1/20	C, N	H, J, K	B, D	S	P, R	DAL, IRC
RN^50@68R1%&	68.1	1/20	C, N	H, J, K	B, D, F	S	P, R	DAL, IRC
	Resistance	Power	Term.	Char.	Resistance	Level 1	Level 2	
Part Number	Value (Ohms)	Rating (W)	Type (^)	(@)	Tolerance (%)	(FRL) (&)	(FRL) (&)	Manufacturer
RN^50@69R0%&	69.0	1/20	C, N	H, J, K	B, D	S	P, R	DAL, IRC
RN^50@69R8%&	69.8	1/20	C, N	H, J, K	B, D, F	S	P, R	DAL, IRC
RN^50@70R6%&	70.6	1/20	C, N	H, J, K	B, D	S	P, R	DAL, IRC
RN^50@71R5%&	71.5	1/20	C, N	H, J, K	B, D, F	S	P, R	DAL, IRC
RN^50@72R3%&	72.3	1/20	C, N	H, J, K	B, D	S	P, R	DAL, IRC
RN^50@73R2%&	73.2	1/20	C, N	H, J, K	B, D, F	S	P, R	DAL, IRC
RN^50@74R1%&	74.1	1/20	C, N	H, J, K	B, D	S	P, R	DAL, IRC
	Resistance	Power	Term.	Char.	Resistance	Level 1	Level 2	
Part Number	Value (Ohms)	Rating (W)	Type (^)	(@)	Tolerance (%)	(FRL) (&)	(FRL) (&)	Manufacturer
RN^50@75R0%&	75.0	1/20	C, N	H, J, K	B, D, F	S	P, R	DAL, IRC

RN^50@75R9%&	75.9	1/20	C, N	H, J, K	B, D	S	P, R	DAL, IRC
RN^50@76R8%&	76.8	1/20	C, N	H, J, K	B, D, F	S	P, R	DAL, IRC
RN^50@77R7%&	77.7	1/20	C, N	H, J, K	B, D	S	P, R	DAL, IRC
RN^50@78R7%&	78.7	1/20	C, N	H, J, K	B, D, F	S	P, R	DAL, IRC
RN^50@79R6%&	79.6	1/20	C, N	H, J, K	B, D	S	P, R	DAL, IRC
RN^50@80R6%&	80.6	1/20	C, N	H, J, K	B, D, F	S	P, R	DAL, IRC
	Resistance	Power	Term.	Char.	Resistance	Level 1	Level 2	
Part Number	Value (Ohms)	Rating (W)	Type (^)	(@)	Tolerance (%)	(FRL) (&)	(FRL) (&)	Manufacturer
RN^50@81R6%&	81.6	1/20	C, N	H, J, K	B, D	S	P, R	DAL, IRC
RN^50@82R5%&	82.5	1/20	C, N	H, J, K	B, D, F	S	P, R	DAL, IRC
RN^50@83R5%&	83.5	1/20	C, N	H, J, K	B, D	S	P, R	DAL, IRC
RN^50@84R5%&	84.5	1/20	C, N	H, J, K	B, D, F	S	P, R	DAL, IRC
RN^50@85R6%&	85.6	1/20	C, N	H, J, K	B, D	S	P, R	DAL, IRC
RN^50@86R6%&	86.6	1/20	C, N	H, J, K	B, D, F	S	P, R	DAL, IRC
RN^50@87R6%&	87.6	1/20	C, N	H, J, K	B, D	S	P, R	DAL, IRC
	Resistance	Power	Term.	Char.	Resistance	Level 1	Level 2	
Part Number	Value (Ohms)	Rating (W)	Type (^)	(@)	Tolerance (%)	(FRL) (&)	(FRL) (&)	Manufacturer
RN^50@88R7%&	88.7	1/20	C, N	H, J, K	B, D, F	S	P, R	DAL, IRC
RN^50@89R8%&	89.8	1/20	C, N	H, J, K	B, D	S	P, R	DAL, IRC
RN^50@90R9%&	90.9	1/20	C, N	H, J, K	B, D, F	S	P, R	DAL, IRC
RN^50@92R0%&	92.0	1/20	C, N	H, J, K	B, D	S	P, R	DAL, IRC
RN^50@93R1%&	93.1	1/20	C, N	H, J, K	B, D, F	S	P, R	DAL, IRC
RN^50@94R2%&	94.2	1/20	C, N	H, J, K	B, D	S	P, R	DAL, IRC
RN^50@95R3%&	95.3	1/20	C, N	H, J, K	B, D, F	S	P, R	DAL, IRC
	Resistance	Power	Term.	Char.	Resistance	Level 1	Level 2	
Part Number	Value (Ohms)	Rating (W)	Type (^)	(@)	Tolerance (%)	(FRL) (&)	(FRL) (&)	Manufacturer
RN^50@96R5%&	96.5	1/20	C, N	H, J, K	B, D	S	P, R	DAL, IRC
RN^50@97R6%&	97.6	1/20	C, N	H, J, K	B, D, F	S	P, R	DAL, IRC
RN^50@98R8%&	98.8	1/20	C, N	H, J, K	B, D	S	P, R	DAL, IRC

RN^50 Film Resistors: 100 Ohms through 988 Ohms

	Resistance	Power	Term.	Char.	Resistance	Level 1	Level 2	
Part Number	Value (Ohms)	Rating (W)	Type (^)	(@)	Tolerance (%)	(FRL) (&)	(FRL) (&)	Manufacturer
RN^50@1000%&	100	1/20	C, N	H, J, K	B, D, F	S	P, R	DAL, IRC
RN^50@1010%&	101	1/20	C, N	H, J, K	B, D	S	P, R	DAL, IRC
RN^50@1020%&	102	1/20	C, N	H, J, K	B, D, F	S	P, R	DAL, IRC
RN^50@1040%&	104	1/20	C, N	H, J, K	B, D	S	P, R	DAL, IRC
RN^50@1050%&	105	1/20	C, N	H, J, K	B, D, F	S	P, R	DAL, IRC
RN^50@1060%&	106	1/20	C, N	H, J, K	B, D	S	P, R	DAL, IRC
RN^50@1070%&	107	1/20	C, N	H, J, K	B, D, F	S	P, R	DAL, IRC
	Resistance	Power	Term.	Char.	Resistance	Level 1	Level 2	
Part Number	Value (Ohms)	Rating (W)	Type (^)	(@)	Tolerance (%)	(FRL) (&)	(FRL) (&)	Manufacturer
RN^50@1090%&	109	1/20	C, N	H, J, K	B, D	S	P, R	DAL, IRC
RN^50@1100%&	110	1/20	C, N	H, J, K	B, D, F	S	P, R	DAL, IRC

RN^50@1110%&	111	1/20	C, N	H, J, K	B, D	S	P, R	DAL, IRC
RN^50@1130%&	113	1/20	C, N	H, J, K	B, D, F	S	P, R	DAL, IRC
RN^50@1140%&	114	1/20	C, N	H, J, K	B, D	S	P, R	DAL, IRC
RN^50@1150%&	115	1/20	C, N	H, J, K	B, D, F	S	P, R	DAL, IRC
RN^50@1170%&	117	1/20	C, N	H, J, K	B, D	S	P, R	DAL, IRC
	Resistance	Power	Term.	Char.	Resistance	Level 1	Level 2	
Part Number	Value (Ohms)	Rating (W)	Type (^)	(@)	Tolerance (%)	(FRL) (&)	(FRL) (&)	Manufacturer
RN^50@1180%&	118	1/20	C, N	H, J, K	B, D, F	S	P, R	DAL, IRC
RN^50@1200%&	120	1/20	C, N	H, J, K	B, D	S	P, R	DAL, IRC
RN^50@1210%&	121	1/20	C, N	H, J, K	B, D, F	S	P, R	DAL, IRC
RN^50@1230%&	123	1/20	C, N	H, J, K	B, D	S	P, R	DAL, IRC
RN^50@1240%&	124	1/20	C, N	H, J, K	B, D, F	S	P, R	DAL, IRC
RN^50@1260%&	126	1/20	C, N	H, J, K	B, D	S	P, R	DAL, IRC
RN^50@1270%&	127	1/20	C, N	H, J, K	B, D, F	S	P, R	DAL, IRC
	Resistance	Power	Term.	Char.	Resistance	Level 1	Level 2	
Part Number	Value (Ohms)	Rating (W)	Type (^)	(@)	Tolerance (%)	(FRL) (&)	(FRL) (&)	Manufacturer
RN^50@1290%&	129	1/20	C, N	H, J, K	B, D	S	P, R	DAL, IRC
RN^50@1300%&	130	1/20	C, N	H, J, K	B, D, F	S	P, R	DAL, IRC
RN^50@1320%&	132	1/20	C, N	H, J, K	B, D	S	P, R	DAL, IRC
RN^50@1330%&	133	1/20	C, N	H, J, K	B, D, F	S	P, R	DAL, IRC
RN^50@1350%&	135	1/20	C, N	H, J, K	B, D	S	P, R	DAL, IRC
RN^50@1370%&	137	1/20	C, N	H, J, K	B, D, F	S	P, R	DAL, IRC
RN^50@1380%&	138	1/20	C, N	H, J, K	B, D	S	P, R	DAL, IRC
	Resistance	Power	Term.	Char.	Resistance	Level 1	Level 2	
Part Number	Value (Ohms)	Rating (W)	Type (^)	(@)	Tolerance (%)	(FRL) (&)	(FRL) (&)	Manufacturer
RN^50@1400%&	140	1/20	C, N	H, J, K	B, D, F	S	P, R	DAL, IRC
RN^50@1420%&	142	1/20	C, N	H, J, K	B, D	S	P, R	DAL, IRC
RN^50@1430%&	143	1/20	C, N	H, J, K	B, D, F	S	P, R	DAL, IRC
RN^50@1450%&	145	1/20	C, N	H, J, K	B, D	S	P, R	DAL, IRC
RN^50@1470%&	147	1/20	C, N	H, J, K	B, D, F	S	P, R	DAL, IRC
RN^50@1490%&	149	1/20	C, N	H, J, K	B, D	S	P, R	DAL, IRC
RN^50@1500%&	150	1/20	C, N	H, J, K	B, D, F	S	P, R	DAL, IRC
	Resistance	Power	Term.	Char.	Resistance	Level 1	Level 2	
Part Number	Value (Ohms)	Rating (W)	Type (^)	(@)	Tolerance (%)	(FRL) (&)	(FRL) (&)	Manufacturer
RN^50@1520%&	152	1/20	C, N	H, J, K	B, D	S	P, R	DAL, IRC
RN^50@1540%&	154	1/20	C, N	H, J, K	B, D, F	S	P, R	DAL, IRC
RN^50@1560%&	156	1/20	C, N	H, J, K	B, D	S	P, R	DAL, IRC
RN^50@1580%&	158	1/20	C, N	H, J, K	B, D, F	S	P, R	DAL, IRC
RN^50@1600%&	160	1/20	C, N	H, J, K	B, D	S	P, R	DAL, IRC
RN^50@1620%&	162	1/20	C, N	H, J, K	B, D, F	S	P, R	DAL, IRC
RN^50@1640%&	164	1/20	C, N	H, J, K	B, D	S	P, R	DAL, IRC
	Resistance	Power	Term.	Char.	Resistance	Level 1	Level 2	
Part Number	Value (Ohms)	Rating (W)	Type (^)	(@)	Tolerance (%)	(FRL) (&)	(FRL) (&)	Manufacturer
RN^50@1650%&	165	1/20	C, N	H, J, K	B, D, F	S	P, R	DAL, IRC
RN^50@1670%&	167	1/20	C, N	H, J, K	B, D	S	P, R	DAL, IRC
RN^50@1690%&	169	1/20	C, N	H, J, K	B, D, F	S	P, R	DAL, IRC
RN^50@1720%&	172	1/20	C, N	H, J, K	B, D	S	P, R	DAL, IRC

RN^50@1740%&	174	1/20	C, N	H, J, K	B, D, F	S	P, R	DAL, IRC
RN^50@1760%&	176	1/20	C, N	H, J, K	B, D	S	P, R	DAL, IRC
RN^50@1780%&	178	1/20	C, N	H, J, K	B, D, F	S	P, R	DAL, IRC
	Resistance	Power	Term.	Char.	Resistance	Level 1	Level 2	
Part Number	Value (Ohms)	Rating (W)	Type (^)	(@)	Tolerance (%)	(FRL) (&)	(FRL) (&)	Manufacturer
RN^50@1800%&	180	1/20	C, N	H, J, K	B, D	S	P, R	DAL, IRC
RN^50@1820%&	182	1/20	C, N	H, J, K	B, D, F	S	P, R	DAL, IRC
RN^50@1840%&	184	1/20	C, N	H, J, K	B, D	S	P, R	DAL, IRC
RN^50@1870%&	187	1/20	C, N	H, J, K	B, D, F	S	P, R	DAL, IRC
RN^50@1890%&	189	1/20	C, N	H, J, K	B, D	S	P, R	DAL, IRC
RN^50@1910%&	191	1/20	C, N	H, J, K	B, D, F	S	P, R	DAL, IRC
RN^50@1930%&	193	1/20	C, N	H, J, K	B, D	S	P, R	DAL, IRC
	Resistance	Power	Term.	Char.	Resistance	Level 1	Level 2	
Part Number	Value (Ohms)	Rating (W)	Type (^)	(@)	Tolerance (%)	(FRL) (&)	(FRL) (&)	Manufacturer
RN^50@1960%&	196	1/20	C, N	H, J, K	B, D, F	S	P, R	DAL, IRC
RN^50@1980%&	198	1/20	C, N	H, J, K	B, D	S	P, R	DAL, IRC
RN^50@2000%&	200	1/20	C, N	H, J, K	B, D, F	S	P, R	DAL, IRC
RN^50@2030%&	203	1/20	C, N	H, J, K	B, D	S	P, R	DAL, IRC
RN^50@2050%&	205	1/20	C, N	H, J, K	B, D, F	S	P, R	DAL, IRC
RN^50@2080%&	208	1/20	C, N	H, J, K	B, D	S	P, R	DAL, IRC
RN^50@2100%&	210	1/20	C, N	H, J, K	B, D, F	S	P, R	DAL, IRC
	Resistance	Power	Term.	Char.	Resistance	Level 1	Level 2	
Part Number	Value (Ohms)	Rating (W)	Type (^)	(@)	Tolerance (%)	(FRL) (&)	(FRL) (&)	Manufacturer
RN^50@2130%&	213	1/20	C, N	H, J, K	B, D	S	P, R	DAL, IRC
RN^50@2150%&	215	1/20	C, N	H, J, K	B, D, F	S	P, R	DAL, IRC
RN^50@2180%&	218	1/20	C, N	H, J, K	B, D	S	P, R	DAL, IRC
RN^50@2210%&	221	1/20	C, N	H, J, K	B, D, F	S	P, R	DAL, IRC
RN^50@2230%&	223	1/20	C, N	H, J, K	B, D	S	P, R	DAL, IRC
RN^50@2260%&	226	1/20	C, N	H, J, K	B, D, F	S	P, R	DAL, IRC
RN^50@2290%&	229	1/20	C, N	H, J, K	B, D	S	P, R	DAL, IRC
	Resistance	Power	Term.	Char.	Resistance	Level 1	Level 2	
Part Number	Value (Ohms)	Rating (W)	Type (^)	(@)	Tolerance (%)	(FRL) (&)	(FRL) (&)	Manufacturer
RN^50@2320%&	232	1/20	C, N	H, J, K	B, D, F	S	P, R	DAL, IRC
RN^50@2340%&	234	1/20	C, N	H, J, K	B, D	S	P, R	DAL, IRC
RN^50@2370%&	237	1/20	C, N	H, J, K	B, D, F	S	P, R	DAL, IRC
RN^50@2400%&	240	1/20	C, N	H, J, K	B, D	S	P, R	DAL, IRC
RN^50@2430%&	243	1/20	C, N	H, J, K	B, D, F	S	P, R	DAL, IRC
RN^50@2460%&	246	1/20	C, N	H, J, K	B, D	S	P, R	DAL, IRC
RN^50@2490%&	249	1/20	C, N	H, J, K	B, D, F	S	P, R	DAL, IRC
	Resistance	Power	Term.	Char.	Resistance	Level 1	Level 2	
Part Number	Value (Ohms)	Rating (W)	Type (^)	(@)	Tolerance (%)	(FRL) (&)	(FRL) (&)	Manufacturer
RN^50@2520%&	252	1/20	C, N	H, J, K	B, D	S	P, R	DAL, IRC
RN^50@2550%&	255	1/20	C, N	H, J, K	B, D, F	S	P, R	DAL, IRC
RN^50@2580%&	258	1/20	C, N	H, J, K	B, D	S	P, R	DAL, IRC
RN^50@2610%&	261	1/20	C, N	H, J, K	B, D, F	S	P, R	DAL, IRC
RN^50@2640%&	264	1/20	C, N	H, J, K	B, D	S	P, R	DAL, IRC
RN^50@2670%&	267	1/20	C, N	H, J, K	B, D, F	S	P, R	DAL, IRC

RN^50@2710%&	271	1/20	C, N	H, J, K	B, D	S	P, R	DAL, IRC
	Resistance	Power	Term.	Char.	Resistance	Level 1	Level 2	
Part Number	Value (Ohms)	Rating (W)	Type (^)	(@)	Tolerance (%)	(FRL) (&)	(FRL) (&)	Manufacturer
RN^50@2740%&	274	1/20	C, N	H, J, K	B, D, F	S	P, R	DAL, IRC
RN^50@2770%&	277	1/20	C, N	H, J, K	B, D	S	P, R	DAL, IRC
RN^50@2800%&	280	1/20	C, N	H, J, K	B, D, F	S	P, R	DAL, IRC
RN^50@2840%&	284	1/20	C, N	H, J, K	B, D	S	P, R	DAL, IRC
RN^50@2870%&	287	1/20	C, N	H, J, K	B, D, F	S	P, R	DAL, IRC
RN^50@2910%&	291	1/20	C, N	H, J, K	B, D	S	P, R	DAL, IRC
RN^50@2940%&	294	1/20	C, N	H, J, K	B, D, F	S	P, R	DAL, IRC
	Resistance	Power	Term.	Char.	Resistance	Level 1	Level 2	
Part Number	Value (Ohms)	Rating (W)	Type (^)	(@)	Tolerance (%)	(FRL) (&)	(FRL) (&)	Manufacturer
RN^50@2980%&	298	1/20	C, N	H, J, K	B, D	S	P, R	DAL, IRC
RN^50@3010%&	301	1/20	C, N	H, J, K	B, D, F	S	P, R	DAL, IRC
RN^50@3050%&	305	1/20	C, N	H, J, K	B, D	S	P, R	DAL, IRC
RN^50@3090%&	309	1/20	C, N	H, J, K	B, D, F	S	P, R	DAL, IRC
RN^50@3120%&	312	1/20	C, N	H, J, K	B, D	S	P, R	DAL, IRC
RN^50@3160%&	316	1/20	C, N	H, J, K	B, D, F	S	P, R	DAL, IRC
RN^50@3200%&	320	1/20	C, N	H, J, K	B, D	S	P, R	DAL, IRC
	Resistance	Power	Term.	Char.	Resistance	Level 1	Level 2	
Part Number	Value (Ohms)	Rating (W)	Type (^)	(@)	Tolerance (%)	(FRL) (&)	(FRL) (&)	Manufacturer
RN^50@3240%&	324	1/20	C, N	H, J, K	B, D, F	S	P, R	DAL, IRC
RN^50@3280%&	328	1/20	C, N	H, J, K	B, D	S	P, R	DAL, IRC
RN^50@3320%&	332	1/20	C, N	H, J, K	B, D, F	S	P, R	DAL, IRC
RN^50@3360%&	336	1/20	C, N	H, J, K	B, D	S	P, R	DAL, IRC
RN^50@3400%&	340	1/20	C, N	H, J, K	B, D, F	S	P, R	DAL, IRC
RN^50@3440%&	344	1/20	C, N	H, J, K	B, D	S	P, R	DAL, IRC
RN^50@3480%&	348	1/20	C, N	H, J, K	B, D, F	S	P, R	DAL, IRC
	Resistance	Power	Term.	Char.	Resistance	Level 1	Level 2	
Part Number	Value (Ohms)	Rating (W)	Type (^)	(@)	Tolerance (%)	(FRL) (&)	(FRL) (&)	Manufacturer
RN^50@3520%&	352	1/20	C, N	H, J, K	B, D	S	P, R	DAL, IRC
RN^50@3570%&	357	1/20	C, N	H, J, K	B, D, F	S	P, R	DAL, IRC
RN^50@3610%&	361	1/20	C, N	H, J, K	B, D	S	P, R	DAL, IRC
RN^50@3650%&	365	1/20	C, N	H, J, K	B, D, F	S	P, R	DAL, IRC
RN^50@3700%&	370	1/20	C, N	H, J, K	B, D	S	P, R	DAL, IRC
RN^50@3740%&	374	1/20	C, N	H, J, K	B, D, F	S	P, R	DAL, IRC
RN^50@3790%&	379	1/20	C, N	H, J, K	B, D	S	P, R	DAL, IRC
	Resistance	Power	Term.	Char.	Resistance	Level 1	Level 2	
Part Number	Value (Ohms)	Rating (W)	Type (^)	(@)	Tolerance (%)	(FRL) (&)	(FRL) (&)	Manufacturer
RN^50@3830%&	383	1/20	C, N	H, J, K	B, D, F	S	P, R	DAL, IRC
RN^50@3880%&	388	1/20	C, N	H, J, K	B, D	S	P, R	DAL, IRC
RN^50@3920%&	392	1/20	C, N	H, J, K	B, D, F	S	P, R	DAL, IRC
RN^50@3970%&	397	1/20	C, N	H, J, K	B, D	S	P, R	DAL, IRC
RN^50@4020%&	402	1/20	C, N	H, J, K	B, D, F	S	P, R	DAL, IRC
RN^50@4070%&	407	1/20	C, N	H, J, K	B, D	S	P, R	DAL, IRC
RN^50@4120%&	412	1/20	C, N	H, J, K	B, D, F	S	P, R	DAL, IRC
	Resistance	Power	Term.	Char.	Resistance	Level 1	Level 2	

Part Number	Value (Ohms)	Rating (W)	Type (^)	(@)	Tolerance (%)	(FRL) (&)	(FRL) (&)	Manufacturer
RN^50@4170%&	417	1/20	C, N	H, J, K	B, D	S	P, R	DAL, IRC
RN^50@4220%&	422	1/20	C, N	H, J, K	B, D, F	S	P, R	DAL, IRC
RN^50@4270%&	427	1/20	C, N	H, J, K	B, D	S	P, R	DAL, IRC
RN^50@4320%&	432	1/20	C, N	H, J, K	B, D, F	S	P, R	DAL, IRC
RN^50@4370%&	437	1/20	C, N	H, J, K	B, D	S	P, R	DAL, IRC
RN^50@4420%&	442	1/20	C, N	H, J, K	B, D, F	S	P, R	DAL, IRC
RN^50@4480%&	448	1/20	C, N	H, J, K	B, D	S	P, R	DAL, IRC
	Resistance	Power	Term.	Char.	Resistance	Level 1	Level 2	
Part Number	Value (Ohms)	Rating (W)	Type (^)	(@)	Tolerance (%)	(FRL) (&)	(FRL) (&)	Manufacturer
RN^50@4530%&	453	1/20	C, N	H, J, K	B, D, F	S	P, R	DAL, IRC
RN^50@4590%&	459	1/20	C, N	H, J, K	B, D	S	P, R	DAL, IRC
RN^50@4640%&	464	1/20	C, N	H, J, K	B, D, F	S	P, R	DAL, IRC
RN^50@4700%&	470	1/20	C, N	H, J, K	B, D	S	P, R	DAL, IRC
RN^50@4750%&	475	1/20	C, N	H, J, K	B, D, F	S	P, R	DAL, IRC
RN^50@4810%&	481	1/20	C, N	H, J, K	B, D	S	P, R	DAL, IRC
RN^50@4870%&	487	1/20	C, N	H, J, K	B, D, F	S	P, R	DAL, IRC
	Resistance	Power	Term.	Char.	Resistance	Level 1	Level 2	
Part Number	Value (Ohms)	Rating (W)	Type (^)	(@)	Tolerance (%)	(FRL) (&)	(FRL) (&)	Manufacturer
RN^50@4930%&	493	1/20	C, N	H, J, K	B, D	S	P, R	DAL, IRC
RN^50@4990%&	499	1/20	C, N	H, J, K	B, D, F	S	P, R	DAL, IRC
RN^50@5050%&	505	1/20	C, N	H, J, K	B, D	S	P, R	DAL, IRC
RN^50@5110%&	511	1/20	C, N	H, J, K	B, D, F	S	P, R	DAL, IRC
RN^50@5170%&	517	1/20	C, N	H, J, K	B, D	S	P, R	DAL, IRC
RN^50@5230%&	523	1/20	C, N	H, J, K	B, D, F	S	P, R	DAL, IRC
RN^50@5300%&	530	1/20	C, N	H, J, K	B, D	S	P, R	DAL, IRC
	Resistance	Power	Term.	Char.	Resistance	Level 1	Level 2	
Part Number	Value (Ohms)	Rating (W)	Type (^)	(@)	Tolerance (%)	(FRL) (&)	(FRL) (&)	Manufacturer
RN^50@5360%&	536	1/20	C, N	H, J, K	B, D, F	S	P, R	DAL, IRC
RN^50@5420%&	542	1/20	C, N	H, J, K	B, D	S	P, R	DAL, IRC
RN^50@5490%&	549	1/20	C, N	H, J, K	B, D, F	S	P, R	DAL, IRC
RN^50@5560%&	556	1/20	C, N	H, J, K	B, D	S	P, R	DAL, IRC
RN^50@5620%&	562	1/20	C, N	H, J, K	B, D, F	S	P, R	DAL, IRC
RN^50@5690%&	569	1/20	C, N	H, J, K	B, D	S	P, R	DAL, IRC
RN^50@5760%&	576	1/20	C, N	H, J, K	B, D, F	S	P, R	DAL, IRC
	Resistance	Power	Term.	Char.	Resistance	Level 1	Level 2	
Part Number	Value (Ohms)	Rating (W)	Type (^)	(@)	Tolerance (%)	(FRL) (&)	(FRL) (&)	Manufacturer
RN^50@5830%&	583	1/20	C, N	H, J, K	B, D	S	P, R	DAL, IRC
RN^50@5900%&	590	1/20	C, N	H, J, K	B, D, F	S	P, R	DAL, IRC
RN^50@5970%&	597	1/20	C, N	H, J, K	B, D	S	P, R	DAL, IRC
RN^50@6040%&	604	1/20	C, N	H, J, K	B, D, F	S	P, R	DAL, IRC
RN^50@6120%&	612	1/20	C, N	H, J, K	B, D	S	P, R	DAL, IRC
RN^50@6190%&	619	1/20	C, N	H, J, K	B, D, F	S	P, R	DAL, IRC
RN^50@6260%&	626	1/20	C, N	H, J, K	B, D	S	P, R	DAL, IRC
	Resistance	Power	Term.	Char.	Resistance	Level 1	Level 2	
Part Number	Value (Ohms)	Rating (W)	Type (^)	(@)	Tolerance (%)	(FRL) (&)	(FRL) (&)	Manufacturer
RN^50@6340%&	634	1/20	C, N	H, J, K	B, D, F	S	P, R	DAL, IRC

RN^50@6420%&	642	1/20	C, N	H, J, K	B, D	S	P, R	DAL, IRC
RN^50@6490%&	649	1/20	C, N	H, J, K	B, D, F	S	P, R	DAL, IRC
RN^50@6570%&	657	1/20	C, N	H, J, K	B, D	S	P, R	DAL, IRC
RN^50@6650%&	665	1/20	C, N	H, J, K	B, D, F	S	P, R	DAL, IRC
RN^50@6730%&	673	1/20	C, N	H, J, K	B, D	S	P, R	DAL, IRC
RN^50@6810%&	681	1/20	C, N	H, J, K	B, D, F	S	P, R	DAL, IRC
	Resistance	Power	Term.	Char.	Resistance	Level 1	Level 2	
Part Number	Value (Ohms)	Rating (W)	Type (^)	(@)	Tolerance (%)	(FRL) (&)	(FRL) (&)	Manufacturer
RN^50@6900%&	690	1/20	C, N	H, J, K	B, D	S	P, R	DAL, IRC
RN^50@6980%&	698	1/20	C, N	H, J, K	B, D, F	S	P, R	DAL, IRC
RN^50@7060%&	706	1/20	C, N	H, J, K	B, D	S	P, R	DAL, IRC
RN^50@7150%&	715	1/20	C, N	H, J, K	B, D, F	S	P, R	DAL, IRC
RN^50@7230%&	723	1/20	C, N	H, J, K	B, D	S	P, R	DAL, IRC
RN^50@7320%&	732	1/20	C, N	H, J, K	B, D, F	S	P, R	DAL, IRC
RN^50@7410%&	741	1/20	C, N	H, J, K	B, D	S	P, R	DAL, IRC
	Resistance	Power	Term.	Char.	Resistance	Level 1	Level 2	
Part Number	Value (Ohms)	Rating (W)	Type (^)	(@)	Tolerance (%)	(FRL) (&)	(FRL) (&)	Manufacturer
RN^50@7500%&	750	1/20	C, N	H, J, K	B, D, F	S	P, R	DAL, IRC
RN^50@7590%&	759	1/20	C, N	H, J, K	B, D	S	P, R	DAL, IRC
RN^50@7680%&	768	1/20	C, N	H, J, K	B, D, F	S	P, R	DAL, IRC
RN^50@7770%&	777	1/20	C, N	H, J, K	B, D	S	P, R	DAL, IRC
RN^50@7870%&	787	1/20	C, N	H, J, K	B, D, F	S	P, R	DAL, IRC
RN^50@7960%&	796	1/20	C, N	H, J, K	B, D	S	P, R	DAL, IRC
RN^50@8060%&	806	1/20	C, N	H, J, K	B, D, F	S	P, R	DAL, IRC
	Resistance	Power	Term.	Char.	Resistance	Level 1	Level 2	
Part Number	Value (Ohms)	Rating (W)	Type (^)	(@)	Tolerance (%)	(FRL) (&)	(FRL) (&)	Manufacturer
RN^50@8160%&	816	1/20	C, N	H, J, K	B, D	S	P, R	DAL, IRC
RN^50@8250%&	825	1/20	C, N	H, J, K	B, D, F	S	P, R	DAL, IRC
RN^50@8350%&	835	1/20	C, N	H, J, K	B, D	S	P, R	DAL, IRC
RN^50@8450%&	845	1/20	C, N	H, J, K	B, D, F	S	P, R	DAL, IRC
RN^50@8560%&	856	1/20	C, N	H, J, K	B, D	S	P, R	DAL, IRC
RN^50@8660%&	866	1/20	C, N	H, J, K	B, D, F	S	P, R	DAL, IRC
RN^50@8760%&	876	1/20	C, N	H, J, K	B, D	S	P, R	DAL, IRC
	Resistance	Power	Term.	Char.	Resistance	Level 1	Level 2	
Part Number	Value (Ohms)	Rating (W)	Type (^)	(@)	Tolerance (%)	(FRL) (&)	(FRL) (&)	Manufacturer
RN^50@8870%&	887	1/20	C, N	H, J, K	B, D, F	S	P, R	DAL, IRC
RN^50@8980%&	898	1/20	C, N	H, J, K	B, D	S	P, R	DAL, IRC
RN^50@9090%&	909	1/20	C, N	H, J, K	B, D, F	S	P, R	DAL, IRC
RN^50@9200%&	920	1/20	C, N	H, J, K	B, D	S	P, R	DAL, IRC
RN^50@9310%&	931	1/20	C, N	H, J, K	B, D, F	S	P, R	DAL, IRC
RN^50@9420%&	942	1/20	C, N	H, J, K	B, D	S	P, R	DAL, IRC
RN^50@9530%&	953	1/20	C, N	H, J, K	B, D, F	S	P, R	DAL, IRC
	Resistance	Power	Term.	Char.	Resistance	Level 1	Level 2	
Part Number	Value (Ohms)	Rating (W)	Type (^)	(@)	Tolerance (%)	(FRL) (&)	(FRL) (&)	Manufacturer
RN^50@9650%&	965	1/20	C, N	H, J, K	B, D	S	P, R	DAL, IRC
RN^50@9760%&	976	1/20	C, N	H, J, K	B, D, F	S	P, R	DAL, IRC
RN^50@9880%&	988	1/20	C, N	H, J, K	B, D	S	P, R	DAL, IRC

RN^50 Film Resistors: 1,000 Ohms through 9,880 Ohms

	Resistance	Power	Term.	Char.	Resistance	Level 1	Level 2	
Part Number	Value (Ohms)	Rating (W)	Type (^)	(@)	Tolerance (%)	(FRL) (&)	(FRL) (&)	Manufacturer
RN^50@1001%&	1,000	1/20	C, N	H, J, K	B, D, F	S	P, R	DAL, IRC
RN^50@1011%&	1,010	1/20	C, N	H, J, K	B, D	S	P, R	DAL, IRC
RN^50@1021%&	1,020	1/20	C, N	H, J, K	B, D, F	S	P, R	DAL, IRC
RN^50@1041%&	1,040	1/20	C, N	H, J, K	B, D	S	P, R	DAL, IRC
RN^50@1051%&	1,050	1/20	C, N	H, J, K	B, D, F	S	P, R	DAL, IRC
RN^50@1061%&	1,060	1/20	C, N	H, J, K	B, D	S	P, R	DAL, IRC
RN^50@1071%&	1,070	1/20	C, N	H, J, K	B, D, F	S	P, R	DAL, IRC
	Resistance	Power	Term.	Char.	Resistance	Level 1	Level 2	
Part Number	Value (Ohms)	Rating (W)	Type (^)	(@)	Tolerance (%)	(FRL) (&)	(FRL) (&)	Manufacturer
RN^50@1091%&	1,090	1/20	C, N	H, J, K	B, D	S	P, R	DAL, IRC
RN^50@1101%&	1,100	1/20	C, N	H, J, K	B, D, F	S	P, R	DAL, IRC
RN^50@1111%&	1,110	1/20	C, N	H, J, K	B, D	S	P, R	DAL, IRC
RN^50@1131%&	1,130	1/20	C, N	H, J, K	B, D, F	S	P, R	DAL, IRC
RN^50@1141%&	1,140	1/20	C, N	H, J, K	B, D	S	P, R	DAL, IRC
RN^50@1151%&	1,150	1/20	C, N	H, J, K	B, D, F	S	P, R	DAL, IRC
RN^50@1171%&	1,170	1/20	C, N	H, J, K	B, D	S	P, R	DAL, IRC
	Resistance	Power	Term.	Char.	Resistance	Level 1	Level 2	
Part Number	Value (Ohms)	Rating (W)	Type (^)	(@)	Tolerance (%)	(FRL) (&)	(FRL) (&)	Manufacturer
RN^50@1181%&	1,180	1/20	C, N	H, J, K	B, D, F	S	P, R	DAL, IRC
RN^50@1201%&	1,200	1/20	C, N	H, J, K	B, D	S	P, R	DAL, IRC
RN^50@1211%&	1,210	1/20	C, N	H, J, K	B, D, F	S	P, R	DAL, IRC
RN^50@1231%&	1,230	1/20	C, N	H, J, K	B, D	S	P, R	DAL, IRC
RN^50@1241%&	1,240	1/20	C, N	H, J, K	B, D, F	S	P, R	DAL, IRC
RN^50@1261%&	1,260	1/20	C, N	H, J, K	B, D	S	P, R	DAL, IRC
RN^50@1271%&	1,270	1/20	C, N	H, J, K	B, D, F	S	P, R	DAL, IRC
	Resistance	Power	Term.	Char.	Resistance	Level 1	Level 2	
Part Number	Value (Ohms)	Rating (W)	Type (^)	(@)	Tolerance (%)	(FRL) (&)	(FRL) (&)	Manufacturer
RN^50@1291%&	1,290	1/20	C, N	H, J, K	B, D	S	P, R	DAL, IRC
RN^50@1301%&	1,300	1/20	C, N	H, J, K	B, D, F	S	P, R	DAL, IRC
RN^50@1321%&	1,320	1/20	C, N	H, J, K	B, D	S	P, R	DAL, IRC
RN^50@1331%&	1,330	1/20	C, N	H, J, K	B, D, F	S	P, R	DAL, IRC
RN^50@1351%&	1,350	1/20	C, N	H, J, K	B, D	S	P, R	DAL, IRC
RN^50@1371%&	1,370	1/20	C, N	H, J, K	B, D, F	S	P, R	DAL, IRC
RN^50@1381%&	1,380	1/20	C, N	H, J, K	B, D	S	P, R	DAL, IRC
	Resistance	Power	Term.	Char.	Resistance	Level 1	Level 2	
Part Number	Value (Ohms)	Rating (W)	Type (^)	(@)	Tolerance (%)	(FRL) (&)	(FRL) (&)	Manufacturer
RN^50@1401%&	1,400	1/20	C, N	H, J, K	B, D, F	S	P, R	DAL, IRC
RN^50@1421%&	1,420	1/20	C, N	H, J, K	B, D	S	P, R	DAL, IRC
RN^50@1431%&	1,430	1/20	C, N	H, J, K	B, D, F	S	P, R	DAL, IRC
RN^50@1451%&	1,450	1/20	C, N	H, J, K	B, D	S	P, R	DAL, IRC

RN^50@1471%&	1,470	1/20	C, N	H, J, K	B, D, F	S	P, R	DAL, IRC
RN^50@1491%&	1,490	1/20	C, N	H, J, K	B, D	S	P, R	DAL, IRC
RN^50@1501%&	1,500	1/20	C, N	H, J, K	B, D, F	S	P, R	DAL, IRC
	Resistance	Power	Term.	Char.	Resistance	Level 1	Level 2	
Part Number	Value (Ohms)	Rating (W)	Type (^)	(@)	Tolerance (%)	(FRL) (&)	(FRL) (&)	Manufacturer
RN^50@1521%&	1,520	1/20	C, N	H, J, K	B, D	S	P, R	DAL, IRC
RN^50@1541%&	1,540	1/20	C, N	H, J, K	B, D, F	S	P, R	DAL, IRC
RN^50@1561%&	1,560	1/20	C, N	H, J, K	B, D	S	P, R	DAL, IRC
RN^50@1581%&	1,580	1/20	C, N	H, J, K	B, D, F	S	P, R	DAL, IRC
RN^50@1601%&	1,600	1/20	C, N	H, J, K	B, D	S	P, R	DAL, IRC
RN^50@1621%&	1,620	1/20	C, N	H, J, K	B, D, F	S	P, R	DAL, IRC
RN^50@1641%&	1,640	1/20	C, N	H, J, K	B, D	S	P, R	DAL, IRC
	Resistance	Power	Term.	Char.	Resistance	Level 1	Level 2	
Part Number	Value (Ohms)	Rating (W)	Type (^)	(@)	Tolerance (%)	(FRL) (&)	(FRL) (&)	Manufacturer
RN^50@1651%&	1,650	1/20	C, N	H, J, K	B, D, F	S	P, R	DAL, IRC
RN^50@1671%&	1,670	1/20	C, N	H, J, K	B, D	S	P, R	DAL, IRC
RN^50@1691%&	1,690	1/20	C, N	H, J, K	B, D, F	S	P, R	DAL, IRC
RN^50@1721%&	1,720	1/20	C, N	H, J, K	B, D	S	P, R	DAL, IRC
RN^50@1741%&	1,740	1/20	C, N	H, J, K	B, D, F	S	P, R	DAL, IRC
RN^50@1761%&	1,760	1/20	C, N	H, J, K	B, D	S	P, R	DAL, IRC
RN^50@1781%&	1,780	1/20	C, N	H, J, K	B, D, F	S	P, R	DAL, IRC
	Resistance	Power	Term.	Char.	Resistance	Level 1	Level 2	
Part Number	Value (Ohms)	Rating (W)	Type (^)	(@)	Tolerance (%)	(FRL) (&)	(FRL) (&)	Manufacturer
RN^50@1801%&	1,800	1/20	C, N	H, J, K	B, D	S	P, R	DAL, IRC
RN^50@1821%&	1,820	1/20	C, N	H, J, K	B, D, F	S	P, R	DAL, IRC
RN^50@1841%&	1,840	1/20	C, N	H, J, K	B, D	S	P, R	DAL, IRC
RN^50@1871%&	1,870	1/20	C, N	H, J, K	B, D, F	S	P, R	DAL, IRC
RN^50@1891%&	1,890	1/20	C, N	H, J, K	B, D	S	P, R	DAL, IRC
RN^50@1911%&	1,910	1/20	C, N	H, J, K	B, D, F	S	P, R	DAL, IRC
RN^50@1931%&	1,930	1/20	C, N	H, J, K	B, D	S	P, R	DAL, IRC
	Resistance	Power	Term.	Char.	Resistance	Level 1	Level 2	
Part Number	Value (Ohms)	Rating (W)	Type (^)	(@)	Tolerance (%)	(FRL) (&)	(FRL) (&)	Manufacturer
RN^50@1961%&	1,960	1/20	C, N	H, J, K	B, D, F	S	P, R	DAL, IRC
RN^50@1981%&	1,980	1/20	C, N	H, J, K	B, D	S	P, R	DAL, IRC
RN^50@2001%&	2,000	1/20	C, N	H, J, K	B, D, F	S	P, R	DAL, IRC
RN^50@2031%&	2,030	1/20	C, N	H, J, K	B, D	S	P, R	DAL, IRC
RN^50@2051%&	2,050	1/20	C, N	H, J, K	B, D, F	S	P, R	DAL, IRC
RN^50@2081%&	2,080	1/20	C, N	H, J, K	B, D	S	P, R	DAL, IRC
RN^50@2101%&	2,100	1/20	C, N	H, J, K	B, D, F	S	P, R	DAL, IRC
	Resistance	Power	Term.	Char.	Resistance	Level 1	Level 2	
Part Number	Value (Ohms)	Rating (W)	Type (^)	(@)	Tolerance (%)	(FRL) (&)	(FRL) (&)	Manufacturer
RN^50@2131%&	2,130	1/20	C, N	H, J, K	B, D	S	P, R	DAL, IRC
RN^50@2151%&	2,150	1/20	C, N	H, J, K	B, D, F	S	P, R	DAL, IRC
RN^50@2181%&	2,180	1/20	C, N	H, J, K	B, D	S	P, R	DAL, IRC
RN^50@2211%&	2,210	1/20	C, N	H, J, K	B, D, F	S	P, R	DAL, IRC
RN^50@2231%&	2,230	1/20	C, N	H, J, K	B, D	S	P, R	DAL, IRC
RN^50@2261%&	2,260	1/20	C, N	H, J, K	B, D, F	S	P, R	DAL, IRC

RN^50@2291%&	2,290	1/20	C, N	H, J, K	B, D	S	P, R	DAL, IRC
	Resistance	Power	Term.	Char.	Resistance	Level 1	Level 2	
Part Number	Value (Ohms)	Rating (W)	Type (^)	(@)	Tolerance (%)	(FRL) (&)	(FRL) (&)	Manufacturer
RN^50@2321%&	2,320	1/20	C, N	H, J, K	B, D, F	S	P, R	DAL, IRC
RN^50@2341%&	2,340	1/20	C, N	H, J, K	B, D	S	P, R	DAL, IRC
RN^50@2371%&	2,370	1/20	C, N	H, J, K	B, D, F	S	P, R	DAL, IRC
RN^50@2401%&	2,400	1/20	C, N	H, J, K	B, D	S	P, R	DAL, IRC
RN^50@2431%&	2,430	1/20	C, N	H, J, K	B, D, F	S	P, R	DAL, IRC
RN^50@2461%&	2,460	1/20	C, N	H, J, K	B, D	S	P, R	DAL, IRC
RN^50@2491%&	2,490	1/20	C, N	H, J, K	B, D, F	S	P, R	DAL, IRC
	Resistance	Power	Term.	Char.	Resistance	Level 1	Level 2	
Part Number	Value (Ohms)	Rating (W)	Type (^)	(@)	Tolerance (%)	(FRL) (&)	(FRL) (&)	Manufacturer
RN^50@2521%&	2,520	1/20	C, N	H, J, K	B, D	S	P, R	DAL, IRC
RN^50@2551%&	2,550	1/20	C, N	H, J, K	B, D, F	S	P, R	DAL, IRC
RN^50@2581%&	2,580	1/20	C, N	H, J, K	B, D	S	P, R	DAL, IRC
RN^50@2611%&	2,610	1/20	C, N	H, J, K	B, D, F	S	P, R	DAL, IRC
RN^50@2641%&	2,640	1/20	C, N	H, J, K	B, D	S	P, R	DAL, IRC
RN^50@2671%&	2,670	1/20	C, N	H, J, K	B, D, F	S	P, R	DAL, IRC
RN^50@2711%&	2,710	1/20	C, N	H, J, K	B, D	S	P, R	DAL, IRC
	Resistance	Power	Term.	Char.	Resistance	Level 1	Level 2	
Part Number	Value (Ohms)	Rating (W)	Type (^)	(@)	Tolerance (%)	(FRL) (&)	(FRL) (&)	Manufacturer
RN^50@2741%&	2,740	1/20	C, N	H, J, K	B, D, F	S	P, R	DAL, IRC
RN^50@2771%&	2,770	1/20	C, N	H, J, K	B, D	S	P, R	DAL, IRC
RN^50@2801%&	2,800	1/20	C, N	H, J, K	B, D, F	S	P, R	DAL, IRC
RN^50@2841%&	2,840	1/20	C, N	H, J, K	B, D	S	P, R	DAL, IRC
RN^50@2871%&	2,870	1/20	C, N	H, J, K	B, D, F	S	P, R	DAL, IRC
RN^50@2911%&	2,910	1/20	C, N	H, J, K	B, D	S	P, R	DAL, IRC
RN^50@2941%&	2,940	1/20	C, N	H, J, K	B, D, F	S	P, R	DAL, IRC
	Resistance	Power	Term.	Char.	Resistance	Level 1	Level 2	
Part Number	Value (Ohms)	Rating (W)	Type (^)	(@)	Tolerance (%)	(FRL) (&)	(FRL) (&)	Manufacturer
RN^50@2981%&	2,980	1/20	C, N	H, J, K	B, D	S	P, R	DAL, IRC
RN^50@3011%&	3,010	1/20	C, N	H, J, K	B, D, F	S	P, R	DAL, IRC
RN^50@3051%&	3,050	1/20	C, N	H, J, K	B, D	S	P, R	DAL, IRC
RN^50@3091%&	3,090	1/20	C, N	H, J, K	B, D, F	S	P, R	DAL, IRC
RN^50@3121%&	3,120	1/20	C, N	H, J, K	B, D	S	P, R	DAL, IRC
RN^50@3161%&	3,160	1/20	C, N	H, J, K	B, D, F	S	P, R	DAL, IRC
RN^50@3201%&	3,200	1/20	C, N	H, J, K	B, D	S	P, R	DAL, IRC
	Resistance	Power	Term.	Char.	Resistance	Level 1	Level 2	
Part Number	Value (Ohms)	Rating (W)	Type (^)	(@)	Tolerance (%)	(FRL) (&)	(FRL) (&)	Manufacturer
RN^50@3241%&	3,240	1/20	C, N	H, J, K	B, D, F	S	P, R	DAL, IRC
RN^50@3281%&	3,280	1/20	C, N	H, J, K	B, D	S	P, R	DAL, IRC
RN^50@3321%&	3,320	1/20	C, N	H, J, K	B, D, F	S	P, R	DAL, IRC
RN^50@3361%&	3,360	1/20	C, N	H, J, K	B, D	S	P, R	DAL, IRC
RN^50@3401%&	3,400	1/20	C, N	H, J, K	B, D, F	S	P, R	DAL, IRC
RN^50@3441%&	3,440	1/20	C, N	H, J, K	B, D	S	P, R	DAL, IRC
RN^50@3481%&	3,480	1/20	C, N	H, J, K	B, D, F	S	P, R	DAL, IRC
	Resistance	Power	Term.	Char.	Resistance	Level 1	Level 2	

Part Number	Value (Ohms)	Rating (W)	Type (^)	(@)	Tolerance (%)	(FRL) (&)	(FRL) (&)	Manufacturer
RN^50@3521%&	3,520	1/20	C, N	H, J, K	B, D	S	P, R	DAL, IRC
RN^50@3571%&	3,570	1/20	C, N	H, J, K	B, D, F	S	P, R	DAL, IRC
RN^50@3611%&	3,610	1/20	C, N	H, J, K	B, D	S	P, R	DAL, IRC
RN^50@3651%&	3,650	1/20	C, N	H, J, K	B, D, F	S	P, R	DAL, IRC
RN^50@3701%&	3,700	1/20	C, N	H, J, K	B, D	S	P, R	DAL, IRC
RN^50@3741%&	3,740	1/20	C, N	H, J, K	B, D, F	S	P, R	DAL, IRC
RN^50@3791%&	3,790	1/20	C, N	H, J, K	B, D	S	P, R	DAL, IRC
	Resistance	Power	Term.	Char.	Resistance	Level 1	Level 2	
Part Number	Value (Ohms)	Rating (W)	Type (^)	(@)	Tolerance (%)	(FRL) (&)	(FRL) (&)	Manufacturer
RN^50@3831%&	3,830	1/20	C, N	H, J, K	B, D, F	S	P, R	DAL, IRC
RN^50@3881%&	3,880	1/20	C, N	H, J, K	B, D	S	P, R	DAL, IRC
RN^50@3921%&	3,920	1/20	C, N	H, J, K	B, D, F	S	P, R	DAL, IRC
RN^50@3971%&	3,970	1/20	C, N	H, J, K	B, D	S	P, R	DAL, IRC
RN^50@4021%&	4,020	1/20	C, N	H, J, K	B, D, F	S	P, R	DAL, IRC
RN^50@4071%&	4,070	1/20	C, N	H, J, K	B, D	S	P, R	DAL, IRC
RN^50@4121%&	4,120	1/20	C, N	H, J, K	B, D, F	S	P, R	DAL, IRC
	Resistance	Power	Term.	Char.	Resistance	Level 1	Level 2	
Part Number	Value (Ohms)	Rating (W)	Type (^)	(@)	Tolerance (%)	(FRL) (&)	(FRL) (&)	Manufacturer
RN^50@4171%&	4,170	1/20	C, N	H, J, K	B, D	S	P, R	DAL, IRC
RN^50@4221%&	4,220	1/20	C, N	H, J, K	B, D, F	S	P, R	DAL, IRC
RN^50@4271%&	4,270	1/20	C, N	H, J, K	B, D	S	P, R	DAL, IRC
RN^50@4321%&	4,320	1/20	C, N	H, J, K	B, D, F	S	P, R	DAL, IRC
RN^50@4371%&	4,370	1/20	C, N	H, J, K	B, D	S	P, R	DAL, IRC
RN^50@4421%&	4,420	1/20	C, N	H, J, K	B, D, F	S	P, R	DAL, IRC
RN^50@4481%&	4,480	1/20	C, N	H, J, K	B, D	S	P, R	DAL, IRC
	Resistance	Power	Term.	Char.	Resistance	Level 1	Level 2	
Part Number	Value (Ohms)	Rating (W)	Type (^)	(@)	Tolerance (%)	(FRL) (&)	(FRL) (&)	Manufacturer
RN^50@4531%&	4,530	1/20	C, N	H, J, K	B, D, F	S	P, R	DAL, IRC
RN^50@4591%&	4,590	1/20	C, N	H, J, K	B, D	S	P, R	DAL, IRC
RN^50@4641%&	4,640	1/20	C, N	H, J, K	B, D, F	S	P, R	DAL, IRC
RN^50@4701%&	4,700	1/20	C, N	H, J, K	B, D	S	P, R	DAL, IRC
RN^50@4751%&	4,750	1/20	C, N	H, J, K	B, D, F	S	P, R	DAL, IRC
RN^50@4811%&	4,810	1/20	C, N	H, J, K	B, D	S	P, R	DAL, IRC
RN^50@4871%&	4,870	1/20	C, N	H, J, K	B, D, F	S	P, R	DAL, IRC
	Resistance	Power	Term.	Char.	Resistance	Level 1	Level 2	
Part Number	Value (Ohms)	Rating (W)	Type (^)	(@)	Tolerance (%)	(FRL) (&)	(FRL) (&)	Manufacturer
RN^50@4931%&	4,930	1/20	C, N	H, J, K	B, D	S	P, R	DAL, IRC
RN^50@4991%&	4,990	1/20	C, N	H, J, K	B, D, F	S	P, R	DAL, IRC
RN^50@5051%&	5,050	1/20	C, N	H, J, K	B, D	S	P, R	DAL, IRC
RN^50@5111%&	5,110	1/20	C, N	H, J, K	B, D, F	S	P, R	DAL, IRC
RN^50@5171%&	5,170	1/20	C, N	H, J, K	B, D	S	P, R	DAL, IRC
RN^50@5231%&	5,230	1/20	C, N	H, J, K	B, D, F	S	P, R	DAL, IRC
RN^50@5301%&	5,300	1/20	C, N	H, J, K	B, D	S	P, R	DAL, IRC
	Resistance	Power	Term.	Char.	Resistance	Level 1	Level 2	
Part Number	Value (Ohms)	Rating (W)	Type (^)	(@)	Tolerance (%)	(FRL) (&)	(FRL) (&)	Manufacturer
RN^50@5361%&	5,360	1/20	C, N	H, J, K	B, D, F	S	P, R	DAL, IRC

RN^50@5421%&	5,420	1/20	C, N	H, J, K	B, D	S	P, R	DAL, IRC
RN^50@5491%&	5,490	1/20	C, N	H, J, K	B, D, F	S	P, R	DAL, IRC
RN^50@5561%&	5,560	1/20	C, N	H, J, K	B, D	S	P, R	DAL, IRC
RN^50@5621%&	5,620	1/20	C, N	H, J, K	B, D, F	S	P, R	DAL, IRC
RN^50@5691%&	5,690	1/20	C, N	H, J, K	B, D	S	P, R	DAL, IRC
RN^50@5761%&	5,760	1/20	C, N	H, J, K	B, D, F	S	P, R	DAL, IRC
	Resistance	Power	Term.	Char.	Resistance	Level 1	Level 2	
Part Number	Value (Ohms)	Rating (W)	Type (^)	(@)	Tolerance (%)	(FRL) (&)	(FRL) (&)	Manufacturer
RN^50@5831%&	5,830	1/20	C, N	H, J, K	B, D	S	P, R	DAL, IRC
RN^50@5901%&	5,900	1/20	C, N	H, J, K	B, D, F	S	P, R	DAL, IRC
RN^50@5971%&	5,970	1/20	C, N	H, J, K	B, D	S	P, R	DAL, IRC
RN^50@6041%&	6,040	1/20	C, N	H, J, K	B, D, F	S	P, R	DAL, IRC
RN^50@6121%&	6,120	1/20	C, N	H, J, K	B, D	S	P, R	DAL, IRC
RN^50@6191%&	6,190	1/20	C, N	H, J, K	B, D, F	S	P, R	DAL, IRC
RN^50@6261%&	6,260	1/20	C, N	H, J, K	B, D	S	P, R	DAL, IRC
	Resistance	Power	Term.	Char.	Resistance	Level 1	Level 2	
Part Number	Value (Ohms)	Rating (W)	Type (^)	(@)	Tolerance (%)	(FRL) (&)	(FRL) (&)	Manufacturer
RN^50@6341%&	6,340	1/20	C, N	H, J, K	B, D, F	S	P, R	DAL, IRC
RN^50@6421%&	6,420	1/20	C, N	H, J, K	B, D	S	P, R	DAL, IRC
RN^50@6491%&	6,490	1/20	C, N	H, J, K	B, D, F	S	P, R	DAL, IRC
RN^50@6571%&	6,570	1/20	C, N	H, J, K	B, D	S	P, R	DAL, IRC
RN^50@6651%&	6,650	1/20	C, N	H, J, K	B, D, F	S	P, R	DAL, IRC
RN^50@6731%&	6,730	1/20	C, N	H, J, K	B, D	S	P, R	DAL, IRC
RN^50@6811%&	6,810	1/20	C, N	H, J, K	B, D, F	S	P, R	DAL, IRC
	Resistance	Power	Term.	Char.	Resistance	Level 1	Level 2	
Part Number	Value (Ohms)	Rating (W)	Type (^)	(@)	Tolerance (%)	(FRL) (&)	(FRL) (&)	Manufacturer
RN^50@6901%&	6,900	1/20	C, N	H, J, K	B, D	S	P, R	DAL, IRC
RN^50@6981%&	6,980	1/20	C, N	H, J, K	B, D, F	S	P, R	DAL, IRC
RN^50@7061%&	7,060	1/20	C, N	H, J, K	B, D	S	P, R	DAL, IRC
RN^50@7151%&	7,150	1/20	C, N	H, J, K	B, D, F	S	P, R	DAL, IRC
RN^50@7231%&	7,230	1/20	C, N	H, J, K	B, D	S	P, R	DAL, IRC
RN^50@7321%&	7,320	1/20	C, N	H, J, K	B, D, F	S	P, R	DAL, IRC
RN^50@7411%&	7,410	1/20	C, N	H, J, K	B, D	S	P, R	DAL, IRC
	Resistance	Power	Term.	Char.	Resistance	Level 1	Level 2	
Part Number	Value (Ohms)	Rating (W)	Type (^)	(@)	Tolerance (%)	(FRL) (&)	(FRL) (&)	Manufacturer
RN^50@7501%&	7,500	1/20	C, N	H, J, K	B, D, F	S	P, R	DAL, IRC
RN^50@7591%&	7,590	1/20	C, N	H, J, K	B, D	S	P, R	DAL, IRC
RN^50@7681%&	7,680	1/20	C, N	H, J, K	B, D, F	S	P, R	DAL, IRC
RN^50@7771%&	7,770	1/20	C, N	H, J, K	B, D	S	P, R	DAL, IRC
RN^50@7871%&	7,870	1/20	C, N	H, J, K	B, D, F	S	P, R	DAL, IRC
RN^50@7961%&	7,960	1/20	C, N	H, J, K	B, D	S	P, R	DAL, IRC
RN^50@8061%&	8,060	1/20	C, N	H, J, K	B, D, F	S	P, R	DAL, IRC
	Resistance	Power	Term.	Char.	Resistance	Level 1	Level 2	
Part Number	Value (Ohms)	Rating (W)	Type (^)	(@)	Tolerance (%)	(FRL) (&)	(FRL) (&)	Manufacturer
RN^50@8161%&	8,160	1/20	C, N	H, J, K	B, D	S	P, R	DAL, IRC
RN^50@8251%&	8,250	1/20	C, N	H, J, K	B, D, F	S	P, R	DAL, IRC
RN^50@8351%&	8,350	1/20	C, N	H, J, K	B, D	S	P, R	DAL, IRC

RN^50@8451%&	8,450	1/20	C, N	H, J, K	B, D, F	S	P, R	DAL, IRC
RN^50@8561%&	8,560	1/20	C, N	H, J, K	B, D	S	P, R	DAL, IRC
RN^50@8661%&	8,660	1/20	C, N	H, J, K	B, D, F	S	P, R	DAL, IRC
RN^50@8761%&	8,760	1/20	C, N	H, J, K	B, D	S	P, R	DAL, IRC
	Resistance	Power	Term.	Char.	Resistance	Level 1	Level 2	
Part Number	Value (Ohms)	Rating (W)	Type (^)	(@)	Tolerance (%)	(FRL) (&)	(FRL) (&)	Manufacturer
RN^50@8871%&	8,870	1/20	C, N	H, J, K	B, D, F	S	P, R	DAL, IRC
RN^50@8981%&	8,980	1/20	C, N	H, J, K	B, D	S	P, R	DAL, IRC
RN^50@9091%&	9,090	1/20	C, N	H, J, K	B, D, F	S	P, R	DAL, IRC
RN^50@9201%&	9,200	1/20	C, N	H, J, K	B, D	S	P, R	DAL, IRC
RN^50@9311%&	9,310	1/20	C, N	H, J, K	B, D, F	S	P, R	DAL, IRC
RN^50@9421%&	9,420	1/20	C, N	H, J, K	B, D	S	P, R	DAL, IRC
RN^50@9531%&	9,530	1/20	C, N	H, J, K	B, D, F	S	P, R	DAL, IRC
	Resistance	Power	Term.	Char.	Resistance	Level 1	Level 2	
Part Number	Value (Ohms)	Rating (W)	Type (^)	(@)	Tolerance (%)	(FRL) (&)	(FRL) (&)	Manufacturer
RN^50@9651%&	9,650	1/20	C, N	H, J, K	B, D	S	P, R	DAL, IRC
RN^50@9761%&	9,760	1/20	C, N	H, J, K	B, D, F	S	P, R	DAL, IRC
RN^50@9881%&	9,880	1/20	C, N	H, J, K	B, D	S	P, R	DAL, IRC

RN^50 Film Resistors: 10,000 Ohms through 98,800 Ohms

	Resistance	Power	Term.	Char.	Resistance	Level 1	Level 2	
Part Number	Value (Ohms)	Rating (W)	Type (^)	(@)	Tolerance (%)	(FRL) (&)	(FRL) (&)	Manufacturer
RN^50@1002%&	10,000	1/20	C, N	H, J, K	B, D, F	S	P, R	DAL, IRC
RN^50@1012%&	10,100	1/20	C, N	H, J, K	B, D	S	P, R	DAL, IRC
RN^50@1022%&	10,200	1/20	C, N	H, J, K	B, D, F	S	P, R	DAL, IRC
RN^50@1042%&	10,400	1/20	C, N	H, J, K	B, D	S	P, R	DAL, IRC
RN^50@1052%&	10,500	1/20	C, N	H, J, K	B, D, F	S	P, R	DAL, IRC
RN^50@1062%&	10,600	1/20	C, N	H, J, K	B, D	S	P, R	DAL, IRC
RN^50@1072%&	10,700	1/20	C, N	H, J, K	B, D, F	S	P, R	DAL, IRC
	Resistance	Power	Term.	Char.	Resistance	Level 1	Level 2	
Part Number	Value (Ohms)	Rating (W)	Type (^)	(@)	Tolerance (%)	(FRL) (&)	(FRL) (&)	Manufacturer
RN^50@1092%&	10,900	1/20	C, N	H, J, K	B, D	S	P, R	DAL, IRC
RN^50@1102%&	11,000	1/20	C, N	H, J, K	B, D, F	S	P, R	DAL, IRC
RN^50@1112%&	11,100	1/20	C, N	H, J, K	B, D	S	P, R	DAL, IRC
RN^50@1132%&	11,300	1/20	C, N	H, J, K	B, D, F	S	P, R	DAL, IRC
RN^50@1142%&	11,400	1/20	C, N	H, J, K	B, D	S	P, R	DAL, IRC
RN^50@1152%&	11,500	1/20	C, N	H, J, K	B, D, F	S	P, R	DAL, IRC
RN^50@1172%&	11,700	1/20	C, N	H, J, K	B, D	S	P, R	DAL, IRC
	Resistance	Power	Term.	Char.	Resistance	Level 1	Level 2	
Part Number	Value (Ohms)	Rating (W)	Type (^)	(@)	Tolerance (%)	(FRL) (&)	(FRL) (&)	Manufacturer
RN^50@1182%&	11,800	1/20	C, N	H, J, K	B, D, F	S	P, R	DAL, IRC
RN^50@1202%&	12,000	1/20	C, N	H, J, K	B, D	S	P, R	DAL, IRC
RN^50@1212%&	12,100	1/20	C, N	H, J, K	B, D, F	S	P, R	DAL, IRC
RN^50@1232%&	12,300	1/20	C, N	H, J, K	B, D	S	P, R	DAL, IRC

RN^50@1242%&	12,400	1/20	C, N	H, J, K	B, D, F	S	P, R	DAL, IRC
RN^50@1262%&	12,600	1/20	C, N	H, J, K	B, D	S	P, R	DAL, IRC
RN^50@1272%&	12,700	1/20	C, N	H, J, K	B, D, F	S	P, R	DAL, IRC
	Resistance	Power	Term.	Char.	Resistance	Level 1	Level 2	
Part Number	Value (Ohms)	Rating (W)	Type (^)	(@)	Tolerance (%)	(FRL) (&)	(FRL) (&)	Manufacturer
RN^50@1292%&	12,900	1/20	C, N	H, J, K	B, D	S	P, R	DAL, IRC
RN^50@1302%&	13,000	1/20	C, N	H, J, K	B, D, F	S	P, R	DAL, IRC
RN^50@1322%&	13,200	1/20	C, N	H, J, K	B, D	S	P, R	DAL, IRC
RN^50@1332%&	13,300	1/20	C, N	H, J, K	B, D, F	S	P, R	DAL, IRC
RN^50@1352%&	13,500	1/20	C, N	H, J, K	B, D	S	P, R	DAL, IRC
RN^50@1372%&	13,700	1/20	C, N	H, J, K	B, D, F	S	P, R	DAL, IRC
RN^50@1382%&	13,800	1/20	C, N	H, J, K	B, D	S	P, R	DAL, IRC
	Resistance	Power	Term.	Char.	Resistance	Level 1	Level 2	
Part Number	Value (Ohms)	Rating (W)	Type (^)	(@)	Tolerance (%)	(FRL) (&)	(FRL) (&)	Manufacturer
RN^50@1402%&	14,000	1/20	C, N	H, J, K	B, D, F	S	P, R	DAL, IRC
RN^50@1422%&	14,200	1/20	C, N	H, J, K	B, D	S	P, R	DAL, IRC
RN^50@1432%&	14,300	1/20	C, N	H, J, K	B, D, F	S	P, R	DAL, IRC
RN^50@1452%&	14,500	1/20	C, N	H, J, K	B, D	S	P, R	DAL, IRC
RN^50@1472%&	14,700	1/20	C, N	H, J, K	B, D, F	S	P, R	DAL, IRC
RN^50@1492%&	14,900	1/20	C, N	H, J, K	B, D	S	P, R	DAL, IRC
RN^50@1502%&	15,000	1/20	C, N	H, J, K	B, D, F	S	P, R	DAL, IRC
	Resistance	Power	Term.	Char.	Resistance	Level 1	Level 2	
Part Number	Value (Ohms)	Rating (W)	Type (^)	(@)	Tolerance (%)	(FRL) (&)	(FRL) (&)	Manufacturer
RN^50@1522%&	15,200	1/20	C, N	H, J, K	B, D	S	P, R	DAL, IRC
RN^50@1542%&	15,400	1/20	C, N	H, J, K	B, D, F	S	P, R	DAL, IRC
RN^50@1562%&	15,600	1/20	C, N	H, J, K	B, D	S	P, R	DAL, IRC
RN^50@1582%&	15,800	1/20	C, N	H, J, K	B, D, F	S	P, R	DAL, IRC
RN^50@1602%&	16,000	1/20	C, N	H, J, K	B, D	S	P, R	DAL, IRC
RN^50@1622%&	16,200	1/20	C, N	H, J, K	B, D, F	S	P, R	DAL, IRC
RN^50@1642%&	16,400	1/20	C, N	H, J, K	B, D	S	P, R	DAL, IRC
	Resistance	Power	Term.	Char.	Resistance	Level 1	Level 2	
Part Number	Value (Ohms)	Rating (W)	Type (^)	(@)	Tolerance (%)	(FRL) (&)	(FRL) (&)	Manufacturer
RN^50@1652%&	16,500	1/20	C, N	H, J, K	B, D, F	S	P, R	DAL, IRC
RN^50@1672%&	16,700	1/20	C, N	H, J, K	B, D	S	P, R	DAL, IRC
RN^50@1692%&	16,900	1/20	C, N	H, J, K	B, D, F	S	P, R	DAL, IRC
RN^50@1722%&	17,200	1/20	C, N	H, J, K	B, D	S	P, R	DAL, IRC
RN^50@1742%&	17,400	1/20	C, N	H, J, K	B, D, F	S	P, R	DAL, IRC
RN^50@1762%&	17,600	1/20	C, N	H, J, K	B, D	S	P, R	DAL, IRC
RN^50@1782%&	17,800	1/20	C, N	H, J, K	B, D, F	S	P, R	DAL, IRC
	Resistance	Power	Term.	Char.	Resistance	Level 1	Level 2	
Part Number	Value (Ohms)	Rating (W)	Type (^)	(@)	Tolerance (%)	(FRL) (&)	(FRL) (&)	Manufacturer
RN^50@1802%&	18,000	1/20	C, N	H, J, K	B, D	S	P, R	DAL, IRC
RN^50@1822%&	18,200	1/20	C, N	H, J, K	B, D, F	S	P, R	DAL, IRC
RN^50@1842%&	18,400	1/20	C, N	H, J, K	B, D	S	P, R	DAL, IRC
RN^50@1872%&	18,700	1/20	C, N	H, J, K	B, D, F	S	P, R	DAL, IRC
RN^50@1892%&	18,900	1/20	C, N	H, J, K	B, D	S	P, R	DAL, IRC
RN^50@1912%&	19,100	1/20	C, N	H, J, K	B, D, F	S	P, R	DAL, IRC

RN^50@1932%&	19,300	1/20	C, N	H, J, K	B, D	S	P, R	DAL, IRC
	Resistance	Power	Term.	Char.	Resistance	Level 1	Level 2	
Part Number	Value (Ohms)	Rating (W)	Type (^)	(@)	Tolerance (%)	(FRL) (&)	(FRL) (&)	Manufacturer
RN^50@1962%&	19,600	1/20	C, N	H, J, K	B, D, F	S	P, R	DAL, IRC
RN^50@1982%&	19,800	1/20	C, N	H, J, K	B, D	S	P, R	DAL, IRC
RN^50@2002%&	20,000	1/20	C, N	H, J, K	B, D, F	S	P, R	DAL, IRC
RN^50@2032%&	20,300	1/20	C, N	H, J, K	B, D	S	P, R	DAL, IRC
RN^50@2052%&	20,500	1/20	C, N	H, J, K	B, D, F	S	P, R	DAL, IRC
RN^50@2082%&	20,800	1/20	C, N	H, J, K	B, D	S	P, R	DAL, IRC
RN^50@2102%&	21,000	1/20	C, N	H, J, K	B, D, F	S	P, R	DAL, IRC
	Resistance	Power	Term.	Char.	Resistance	Level 1	Level 2	
Part Number	Value (Ohms)	Rating (W)	Type (^)	(@)	Tolerance (%)	(FRL) (&)	(FRL) (&)	Manufacturer
RN^50@2132%&	21,300	1/20	C, N	H, J, K	B, D	S	P, R	DAL, IRC
RN^50@2152%&	21,500	1/20	C, N	H, J, K	B, D, F	S	P, R	DAL, IRC
RN^50@2182%&	21,800	1/20	C, N	H, J, K	B, D	S	P, R	DAL, IRC
RN^50@2212%&	22,100	1/20	C, N	H, J, K	B, D, F	S	P, R	DAL, IRC
RN^50@2232%&	22,300	1/20	C, N	H, J, K	B, D	S	P, R	DAL, IRC
RN^50@2262%&	22,600	1/20	C, N	H, J, K	B, D, F	S	P, R	DAL, IRC
RN^50@2292%&	22,900	1/20	C, N	H, J, K	B, D	S	P, R	DAL, IRC
	Resistance	Power	Term.	Char.	Resistance	Level 1	Level 2	
Part Number	Value (Ohms)	Rating (W)	Type (^)	(@)	Tolerance (%)	(FRL) (&)	(FRL) (&)	Manufacturer
RN^50@2322%&	23,200	1/20	C, N	H, J, K	B, D, F	S	P, R	DAL, IRC
RN^50@2342%&	23,400	1/20	C, N	H, J, K	B, D	S	P, R	DAL, IRC
RN^50@2372%&	23,700	1/20	C, N	H, J, K	B, D, F	S	P, R	DAL, IRC
RN^50@2402%&	24,000	1/20	C, N	H, J, K	B, D	S	P, R	DAL, IRC
RN^50@2432%&	24,300	1/20	C, N	H, J, K	B, D, F	S	P, R	DAL, IRC
RN^50@2462%&	24,600	1/20	C, N	H, J, K	B, D	S	P, R	DAL, IRC
RN^50@2492%&	24,900	1/20	C, N	H, J, K	B, D, F	S	P, R	DAL, IRC
	Resistance	Power	Term.	Char.	Resistance	Level 1	Level 2	
Part Number	Value (Ohms)	Rating (W)	Type (^)	(@)	Tolerance (%)	(FRL) (&)	(FRL) (&)	Manufacturer
RN^50@2522%&	25,200	1/20	C, N	H, J, K	B, D	S	P, R	DAL, IRC
RN^50@2552%&	25,500	1/20	C, N	H, J, K	B, D, F	S	P, R	DAL, IRC
RN^50@2582%&	25,800	1/20	C, N	H, J, K	B, D	S	P, R	DAL, IRC
RN^50@2612%&	26,100	1/20	C, N	H, J, K	B, D, F	S	P, R	DAL, IRC
RN^50@2642%&	26,400	1/20	C, N	H, J, K	B, D	S	P, R	DAL, IRC
RN^50@2672%&	26,700	1/20	C, N	H, J, K	B, D, F	S	P, R	DAL, IRC
RN^50@2712%&	27,100	1/20	C, N	H, J, K	B, D	S	P, R	DAL, IRC
	Resistance	Power	Term.	Char.	Resistance	Level 1	Level 2	
Part Number	Value (Ohms)	Rating (W)	Type (^)	(@)	Tolerance (%)	(FRL) (&)	(FRL) (&)	Manufacturer
RN^50@2742%&	27,400	1/20	C, N	H, J, K	B, D, F	S	P, R	DAL, IRC
RN^50@2772%&	27,700	1/20	C, N	H, J, K	B, D	S	P, R	DAL, IRC
RN^50@2802%&	28,000	1/20	C, N	H, J, K	B, D, F	S	P, R	DAL, IRC
RN^50@2842%&	28,400	1/20	C, N	H, J, K	B, D	S	P, R	DAL, IRC
RN^50@2872%&	28,700	1/20	C, N	H, J, K	B, D, F	S	P, R	DAL, IRC
RN^50@2912%&	29,100	1/20	C, N	H, J, K	B, D	S	P, R	DAL, IRC
RN^50@2942%&	29,400	1/20	C, N	H, J, K	B, D, F	S	P, R	DAL, IRC
	Resistance	Power	Term.	Char.	Resistance	Level 1	Level 2	

Part Number	Value (Ohms)	Rating (W)	Type (^)	(@)	Tolerance (%)	(FRL) (&)	(FRL) (&)	Manufacturer
RN^50@2982%&	29,800	1/20	C, N	H, J, K	B, D	S	P, R	DAL, IRC
RN^50@3012%&	30,100	1/20	C, N	H, J, K	B, D, F	S	P, R	DAL, IRC
RN^50@3052%&	30,500	1/20	C, N	H, J, K	B, D	S	P, R	DAL, IRC
RN^50@3092%&	30,900	1/20	C, N	H, J, K	B, D, F	S	P, R	DAL, IRC
RN^50@3122%&	31,200	1/20	C, N	H, J, K	B, D	S	P, R	DAL, IRC
RN^50@3162%&	31,600	1/20	C, N	H, J, K	B, D, F	S	P, R	DAL, IRC
RN^50@3202%&	32,000	1/20	C, N	H, J, K	B, D	S	P, R	DAL, IRC
	Resistance	Power	Term.	Char.	Resistance	Level 1	Level 2	
Part Number	Value (Ohms)	Rating (W)	Type (^)	(@)	Tolerance (%)	(FRL) (&)	(FRL) (&)	Manufacturer
RN^50@3242%&	32,400	1/20	C, N	H, J, K	B, D, F	S	P, R	DAL, IRC
RN^50@3282%&	32,800	1/20	C, N	H, J, K	B, D	S	P, R	DAL, IRC
RN^50@3322%&	33,200	1/20	C, N	H, J, K	B, D, F	S	P, R	DAL, IRC
RN^50@3362%&	33,600	1/20	C, N	H, J, K	B, D	S	P, R	DAL, IRC
RN^50@3402%&	34,000	1/20	C, N	H, J, K	B, D, F	S	P, R	DAL, IRC
RN^50@3442%&	34,400	1/20	C, N	H, J, K	B, D	S	P, R	DAL, IRC
RN^50@3482%&	34,800	1/20	C, N	H, J, K	B, D, F	S	P, R	DAL, IRC
	Resistance	Power	Term.	Char.	Resistance	Level 1	Level 2	
Part Number	Value (Ohms)	Rating (W)	Type (^)	(@)	Tolerance (%)	(FRL) (&)	(FRL) (&)	Manufacturer
RN^50@3522%&	35,200	1/20	C, N	H, J, K	B, D	S	P, R	DAL, IRC
RN^50@3572%&	35,700	1/20	C, N	H, J, K	B, D, F	S	P, R	DAL, IRC
RN^50@3612%&	36,100	1/20	C, N	H, J, K	B, D	S	P, R	DAL, IRC
RN^50@3652%&	36,500	1/20	C, N	H, J, K	B, D, F	S	P, R	DAL, IRC
RN^50@3702%&	37,000	1/20	C, N	H, J, K	B, D	S	P, R	DAL, IRC
RN^50@3742%&	37,400	1/20	C, N	H, J, K	B, D, F	S	P, R	DAL, IRC
RN^50@3792%&	37,900	1/20	C, N	H, J, K	B, D	S	P, R	DAL, IRC
	Resistance	Power	Term.	Char.	Resistance	Level 1	Level 2	
Part Number	Value (Ohms)	Rating (W)	Type (^)	(@)	Tolerance (%)	(FRL) (&)	(FRL) (&)	Manufacturer
RN^50@3832%&	38,300	1/20	C, N	H, J, K	B, D, F	S	P, R	DAL, IRC
RN^50@3882%&	38,800	1/20	C, N	H, J, K	B, D	S	P, R	DAL, IRC
RN^50@3922%&	39,200	1/20	C, N	H, J, K	B, D, F	S	P, R	DAL, IRC
RN^50@3972%&	39,700	1/20	C, N	H, J, K	B, D	S	P, R	DAL, IRC
RN^50@4022%&	40,200	1/20	C, N	H, J, K	B, D, F	S	P, R	DAL, IRC
RN^50@4072%&	40,700	1/20	C, N	H, J, K	B, D	S	P, R	DAL, IRC
RN^50@4122%&	41,200	1/20	C, N	H, J, K	B, D, F	S	P, R	DAL, IRC
	Resistance	Power	Term.	Char.	Resistance	Level 1	Level 2	
Part Number	Value (Ohms)	Rating (W)	Type (^)	(@)	Tolerance (%)	(FRL) (&)	(FRL) (&)	Manufacturer
RN^50@4172%&	41,700	1/20	C, N	H, J, K	B, D	S	P, R	DAL, IRC
RN^50@4222%&	42,200	1/20	C, N	H, J, K	B, D, F	S	P, R	DAL, IRC
RN^50@4272%&	42,700	1/20	C, N	H, J, K	B, D	S	P, R	DAL, IRC
RN^50@4322%&	43,200	1/20	C, N	H, J, K	B, D, F	S	P, R	DAL, IRC
RN^50@4372%&	43,700	1/20	C, N	H, J, K	B, D	S	P, R	DAL, IRC
RN^50@4422%&	44,200	1/20	C, N	H, J, K	B, D, F	S	P, R	DAL, IRC
RN^50@4482%&	44,800	1/20	C, N	H, J, K	B, D	S	P, R	DAL, IRC
	Resistance	Power	Term.	Char.	Resistance	Level 1	Level 2	
Part Number	Value (Ohms)	Rating (W)	Type (^)	(@)	Tolerance (%)	(FRL) (&)	(FRL) (&)	Manufacturer
RN^50@4532%&	45,300	1/20	C, N	H, J, K	B, D, F	S	P, R	DAL, IRC

RN^50@4592%&	45,900	1/20	C, N	H, J, K	B, D	S	P, R	DAL, IRC
RN^50@4642%&	46,400	1/20	C, N	H, J, K	B, D, F	S	P, R	DAL, IRC
RN^50@4702%&	47,000	1/20	C, N	H, J, K	B, D	S	P, R	DAL, IRC
RN^50@4752%&	47,500	1/20	C, N	H, J, K	B, D, F	S	P, R	DAL, IRC
RN^50@4812%&	48,100	1/20	C, N	H, J, K	B, D	S	P, R	DAL, IRC
RN^50@4872%&	48,700	1/20	C, N	H, J, K	B, D, F	S	P, R	DAL, IRC
	Resistance	Power	Term.	Char.	Resistance	Level 1	Level 2	
Part Number	Value (Ohms)	Rating (W)	Type (^)	(@)	Tolerance (%)	(FRL) (&)	(FRL) (&)	Manufacturer
RN^50@4932%&	49,300	1/20	C, N	H, J, K	B, D	S	P, R	DAL, IRC
RN^50@4992%&	49,900	1/20	C, N	H, J, K	B, D, F	S	P, R	DAL, IRC
RN^50@5052%&	50,500	1/20	C, N	H, J, K	B, D	S	P, R	DAL, IRC
RN^50@5112%&	51,100	1/20	C, N	H, J, K	B, D, F	S	P, R	DAL, IRC
RN^50@5172%&	51,700	1/20	C, N	H, J, K	B, D	S	P, R	DAL, IRC
RN^50@5232%&	52,300	1/20	C, N	H, J, K	B, D, F	S	P, R	DAL, IRC
RN^50@5302%&	53,000	1/20	C, N	H, J, K	B, D	S	P, R	DAL, IRC
	Resistance	Power	Term.	Char.	Resistance	Level 1	Level 2	
Part Number	Value (Ohms)	Rating (W)	Type (^)	(@)	Tolerance (%)	(FRL) (&)	(FRL) (&)	Manufacturer
RN^50@5362%&	53,600	1/20	C, N	H, J, K	B, D, F	S	P, R	DAL, IRC
RN^50@5422%&	54,200	1/20	C, N	H, J, K	B, D	S	P, R	DAL, IRC
RN^50@5492%&	54,900	1/20	C, N	H, J, K	B, D, F	S	P, R	DAL, IRC
RN^50@5562%&	55,600	1/20	C, N	H, J, K	B, D	S	P, R	DAL, IRC
RN^50@5622%&	56,200	1/20	C, N	H, J, K	B, D, F	S	P, R	DAL, IRC
RN^50@5692%&	56,900	1/20	C, N	H, J, K	B, D	S	P, R	DAL, IRC
RN^50@5762%&	57,600	1/20	C, N	H, J, K	B, D, F	S	P, R	DAL, IRC
	Resistance	Power	Term.	Char.	Resistance	Level 1	Level 2	
Part Number	Value (Ohms)	Rating (W)	Type (^)	(@)	Tolerance (%)	(FRL) (&)	(FRL) (&)	Manufacturer
RN^50@5832%&	58,300	1/20	C, N	H, J, K	B, D	S	P, R	DAL, IRC
RN^50@5902%&	59,000	1/20	C, N	H, J, K	B, D, F	S	P, R	DAL, IRC
RN^50@5972%&	59,700	1/20	C, N	H, J, K	B, D	S	P, R	DAL, IRC
RN^50@6042%&	60,400	1/20	C, N	H, J, K	B, D, F	S	P, R	DAL, IRC
RN^50@6122%&	61,200	1/20	C, N	H, J, K	B, D	S	P, R	DAL, IRC
RN^50@6192%&	61,900	1/20	C, N	H, J, K	B, D, F	S	P, R	DAL, IRC
RN^50@6262%&	62,600	1/20	C, N	H, J, K	B, D	S	P, R	DAL, IRC
	Resistance	Power	Term.	Char.	Resistance	Level 1	Level 2	
Part Number	Value (Ohms)	Rating (W)	Type (^)	(@)	Tolerance (%)	(FRL) (&)	(FRL) (&)	Manufacturer
RN^50@6342%&	63,400	1/20	C, N	H, J, K	B, D, F	S	P, R	DAL, IRC
RN^50@6422%&	64,200	1/20	C, N	H, J, K	B, D	S	P, R	DAL, IRC
RN^50@6492%&	64,900	1/20	C, N	H, J, K	B, D, F	S	P, R	DAL, IRC
RN^50@6572%&	65,700	1/20	C, N	H, J, K	B, D	S	P, R	DAL, IRC
RN^50@6652%&	66,500	1/20	C, N	H, J, K	B, D, F	S	P, R	DAL, IRC
RN^50@6732%&	67,300	1/20	C, N	H, J, K	B, D	S	P, R	DAL, IRC
RN^50@6812%&	68,100	1/20	C, N	H, J, K	B, D, F	S	P, R	DAL, IRC
	Resistance	Power	Term.	Char.	Resistance	Level 1	Level 2	
Part Number	Value (Ohms)	Rating (W)	Type (^)	(@)	Tolerance (%)	(FRL) (&)	(FRL) (&)	Manufacturer
RN^50@6902%&	69,000	1/20	C, N	H, J, K	B, D	S	P, R	DAL, IRC
RN^50@6982%&	69,800	1/20	C, N	H, J, K	B, D, F	S	P, R	DAL, IRC
RN^50@7062%&	70,600	1/20	C, N	H, J, K	B, D	S	P, R	DAL, IRC

RN^50@7152%&	71,500	1/20	C, N	H, J, K	B, D, F	S	P, R	DAL, IRC
RN^50@7232%&	72,300	1/20	C, N	H, J, K	B, D	S	P, R	DAL, IRC
RN^50@7322%&	73,200	1/20	C, N	H, J, K	B, D, F	S	P, R	DAL, IRC
RN^50@7412%&	74,100	1/20	C, N	H, J, K	B, D	S	P, R	DAL, IRC
	Resistance	Power	Term.	Char.	Resistance	Level 1	Level 2	
Part Number	Value (Ohms)	Rating (W)	Type (^)	(@)	Tolerance (%)	(FRL) (&)	(FRL) (&)	Manufacturer
RN^50@7502%&	75,000	1/20	C, N	H, J, K	B, D, F	S	P, R	DAL, IRC
RN^50@7592%&	75,900	1/20	C, N	H, J, K	B, D	S	P, R	DAL, IRC
RN^50@7682%&	76,800	1/20	C, N	H, J, K	B, D, F	S	P, R	DAL, IRC
RN^50@7772%&	77,700	1/20	C, N	H, J, K	B, D	S	P, R	DAL, IRC
RN^50@7872%&	78,700	1/20	C, N	H, J, K	B, D, F	S	P, R	DAL, IRC
RN^50@7962%&	79,600	1/20	C, N	H, J, K	B, D	S	P, R	DAL, IRC
RN^50@8062%&	80,600	1/20	C, N	H, J, K	B, D, F	S	P, R	DAL, IRC
	Resistance	Power	Term.	Char.	Resistance	Level 1	Level 2	
Part Number	Value (Ohms)	Rating (W)	Type (^)	(@)	Tolerance (%)	(FRL) (&)	(FRL) (&)	Manufacturer
RN^50@8162%&	81,600	1/20	C, N	H, J, K	B, D	S	P, R	DAL, IRC
RN^50@8252%&	82,500	1/20	C, N	H, J, K	B, D, F	S	P, R	DAL, IRC
RN^50@8352%&	83,500	1/20	C, N	H, J, K	B, D	S	P, R	DAL, IRC
RN^50@8452%&	84,500	1/20	C, N	H, J, K	B, D, F	S	P, R	DAL, IRC
RN^50@8562%&	85,600	1/20	C, N	H, J, K	B, D	S	P, R	DAL, IRC
RN^50@8662%&	86,600	1/20	C, N	H, J, K	B, D, F	S	P, R	DAL, IRC
RN^50@8762%&	87,600	1/20	C, N	H, J, K	B, D	S	P, R	DAL, IRC
	Resistance	Power	Term.	Char.	Resistance	Level 1	Level 2	
Part Number	Value (Ohms)	Rating (W)	Type (^)	(@)	Tolerance (%)	(FRL) (&)	(FRL) (&)	Manufacturer
RN^50@8872%&	88,700	1/20	C, N	H, J, K	B, D, F	S	P, R	DAL, IRC
RN^50@8982%&	89,800	1/20	C, N	H, J, K	B, D	S	P, R	DAL, IRC
RN^50@9092%&	90,900	1/20	C, N	H, J, K	B, D, F	S	P, R	DAL, IRC
RN^50@9202%&	92,000	1/20	C, N	H, J, K	B, D	S	P, R	DAL, IRC
RN^50@9312%&	93,100	1/20	C, N	H, J, K	B, D, F	S	P, R	DAL, IRC
RN^50@9422%&	94,200	1/20	C, N	H, J, K	B, D	S	P, R	DAL, IRC
RN^50@9532%&	95,300	1/20	C, N	H, J, K	B, D, F	S	P, R	DAL, IRC
	Resistance	Power	Term.	Char.	Resistance	Level 1	Level 2	
Part Number	Value (Ohms)	Rating (W)	Type (^)	(@)	Tolerance (%)	(FRL) (&)	(FRL) (&)	Manufacturer
RN^50@9652%&	96,500	1/20	C, N	H, J, K	B, D	S	P, R	DAL, IRC
RN^50@9762%&	97,600	1/20	C, N	H, J, K	B, D, F	S	P, R	DAL, IRC
RN^50@9882%&	98,800	1/20	C, N	H, J, K	B, D	S	P, R	DAL, IRC

RN^50 Film Resistors: 100,000 Ohms through 796,000 Ohms

	Resistance	Power	Term.	Char.	Resistance	Level 1	Level 2	
Part Number	Value (Ohms)	Rating (W)	Type (^)	(@)	Tolerance (%)	(FRL) (&)	(FRL) (&)	Manufacturer
RN^50@1003%&	100,000	1/20	C, N	H, J, K	B, D, F	S	P, R	DAL, IRC
RN^50@1013%&	101,000	1/20	C, N	H, J, K	B, D	S	P, R	DAL, IRC
RN^50@1023%&	102,000	1/20	C, N	H, J, K	B, D, F	S	P, R	DAL, IRC
RN^50@1043%&	104,000	1/20	C, N	H, J, K	B, D	S	P, R	DAL, IRC

RN^50@1053%&	105,000	1/20	C, N	H, J, K	B, D, F	S	P, R	DAL, IRC
RN^50@1063%&	106,000	1/20	C, N	H, J, K	B, D	S	P, R	DAL, IRC
RN^50@1073%&	107,000	1/20	C, N	H, J, K	B, D, F	S	P, R	DAL, IRC
	Resistance	Power	Term.	Char.	Resistance	Level 1	Level 2	
Part Number	Value (Ohms)	Rating (W)	Type (^)	(@)	Tolerance (%)	(FRL) (&)	(FRL) (&)	Manufacturer
RN^50@1093%&	109,000	1/20	C, N	H, J, K	B, D	S	P, R	DAL, IRC
RN^50@1103%&	110,000	1/20	C, N	H, J, K	B, D, F	S	P, R	DAL, IRC
RN^50@1113%&	111,000	1/20	C, N	H, J, K	B, D	S	P, R	DAL, IRC
RN^50@1133%&	113,000	1/20	C, N	H, J, K	B, D, F	S	P, R	DAL, IRC
RN^50@1143%&	114,000	1/20	C, N	H, J, K	B, D	S	P, R	DAL, IRC
RN^50@1153%&	115,000	1/20	C, N	H, J, K	B, D, F	S	P, R	DAL, IRC
RN^50@1173%&	117,000	1/20	C, N	H, J, K	B, D	S	P, R	DAL, IRC
	Resistance	Power	Term.	Char.	Resistance	Level 1	Level 2	
Part Number	Value (Ohms)	Rating (W)	Type (^)	(@)	Tolerance (%)	(FRL) (&)	(FRL) (&)	Manufacturer
RN^50@1183%&	118,000	1/20	C, N	H, J, K	B, D, F	S	P, R	DAL, IRC
RN^50@1203%&	120,000	1/20	C, N	H, J, K	B, D	S	P, R	DAL, IRC
RN^50@1213%&	121,000	1/20	C, N	H, J, K	B, D, F	S	P, R	DAL, IRC
RN^50@1233%&	123,000	1/20	C, N	H, J, K	B, D	S	P, R	DAL, IRC
RN^50@1243%&	124,000	1/20	C, N	H, J, K	B, D, F	S	P, R	DAL, IRC
RN^50@1263%&	126,000	1/20	C, N	H, J, K	B, D	S	P, R	DAL, IRC
RN^50@1273%&	127,000	1/20	C, N	H, J, K	B, D, F	S	P, R	DAL, IRC
	Resistance	Power	Term.	Char.	Resistance	Level 1	Level 2	
Part Number	Value (Ohms)	Rating (W)	Type (^)	(@)	Tolerance (%)	(FRL) (&)	(FRL) (&)	Manufacturer
RN^50@1293%&	129,000	1/20	C, N	H, J, K	B, D	S	P, R	DAL, IRC
RN^50@1303%&	130,000	1/20	C, N	H, J, K	B, D, F	S	P, R	DAL, IRC
RN^50@1323%&	132,000	1/20	C, N	H, J, K	B, D	S	P, R	DAL, IRC
RN^50@1333%&	133,000	1/20	C, N	H, J, K	B, D, F	S	P, R	DAL, IRC
RN^50@1353%&	135,000	1/20	C, N	H, J, K	B, D	S	P, R	DAL, IRC
RN^50@1373%&	137,000	1/20	C, N	H, J, K	B, D, F	S	P, R	DAL, IRC
RN^50@1383%&	138,000	1/20	C, N	H, J, K	B, D	S	P, R	DAL, IRC
	Resistance	Power	Term.	Char.	Resistance	Level 1	Level 2	
Part Number	Value (Ohms)	Rating (W)	Type (^)	(@)	Tolerance (%)	(FRL) (&)	(FRL) (&)	Manufacturer
RN^50@1403%&	140,000	1/20	C, N	H, J, K	B, D, F	S	P, R	DAL, IRC
RN^50@1423%&	142,000	1/20	C, N	H, J, K	B, D	S	P, R	DAL, IRC
RN^50@1433%&	143,000	1/20	C, N	H, J, K	B, D, F	S	P, R	DAL, IRC
RN^50@1453%&	145,000	1/20	C, N	H, J, K	B, D	S	P, R	DAL, IRC
RN^50@1473%&	147,000	1/20	C, N	H, J, K	B, D, F	S	P, R	DAL, IRC
RN^50@1493%&	149,000	1/20	C, N	H, J, K	B, D	S	P, R	DAL, IRC
RN^50@1503%&	150,000	1/20	C, N	H, J, K	B, D, F	S	P, R	DAL, IRC
	Resistance	Power	Term.	Char.	Resistance	Level 1	Level 2	
Part Number	Value (Ohms)	Rating (W)	Type (^)	(@)	Tolerance (%)	(FRL) (&)	(FRL) (&)	Manufacturer
RN^50@1523%&	152,000	1/20	C, N	H, J, K	B, D	S	P, R	DAL, IRC
RN^50@1543%&	154,000	1/20	C, N	H, J, K	B, D, F	S	P, R	DAL, IRC
RN^50@1563%&	156,000	1/20	C, N	H, J, K	B, D	S	P, R	DAL, IRC
RN^50@1583%&	158,000	1/20	C, N	H, J, K	B, D, F	S	P, R	DAL, IRC
RN^50@1603%&	160,000	1/20	C, N	H, J, K	B, D	S	P, R	DAL, IRC
RN^50@1623%&	162,000	1/20	C, N	H, J, K	B, D, F	S	P, R	DAL, IRC

RN^50@1643%&	164,000	1/20	C, N	H, J, K	B, D	S	P, R	DAL, IRC
	Resistance	Power	Term.	Char.	Resistance	Level 1	Level 2	
Part Number	Value (Ohms)	Rating (W)	Type (^)	(@)	Tolerance (%)	(FRL) (&)	(FRL) (&)	Manufacturer
RN^50@1653%&	165,000	1/20	C, N	H, J, K	B, D, F	S	P, R	DAL, IRC
RN^50@1673%&	167,000	1/20	C, N	H, J, K	B, D	S	P, R	DAL, IRC
RN^50@1693%&	169,000	1/20	C, N	H, J, K	B, D, F	S	P, R	DAL, IRC
RN^50@1723%&	172,000	1/20	C, N	H, J, K	B, D	S	P, R	DAL, IRC
RN^50@1743%&	174,000	1/20	C, N	H, J, K	B, D, F	S	P, R	DAL, IRC
RN^50@1763%&	176,000	1/20	C, N	H, J, K	B, D	S	P, R	DAL, IRC
RN^50@1783%&	178,000	1/20	C, N	H, J, K	B, D, F	S	P, R	DAL, IRC
	Resistance	Power	Term.	Char.	Resistance	Level 1	Level 2	
Part Number	Value (Ohms)	Rating (W)	Type (^)	(@)	Tolerance (%)	(FRL) (&)	(FRL) (&)	Manufacturer
RN^50@1803%&	180,000	1/20	C, N	H, J, K	B, D	S	P, R	DAL, IRC
RN^50@1823%&	182,000	1/20	C, N	H, J, K	B, D, F	S	P, R	DAL, IRC
RN^50@1843%&	184,000	1/20	C, N	H, J, K	B, D	S	P, R	DAL, IRC
RN^50@1873%&	187,000	1/20	C, N	H, J, K	B, D, F	S	P, R	DAL, IRC
RN^50@1893%&	189,000	1/20	C, N	H, J, K	B, D	S	P, R	DAL, IRC
RN^50@1913%&	191,000	1/20	C, N	H, J, K	B, D, F	S	P, R	DAL, IRC
RN^50@1933%&	193,000	1/20	C, N	H, J, K	B, D	S	P, R	DAL, IRC
	Resistance	Power	Term.	Char.	Resistance	Level 1	Level 2	
Part Number	Value (Ohms)	Rating (W)	Type (^)	(@)	Tolerance (%)	(FRL) (&)	(FRL) (&)	Manufacturer
RN^50@1963%&	196,000	1/20	C, N	H, J, K	B, D, F	S	P, R	DAL, IRC
RN^50@1983%&	198,000	1/20	C, N	H, J, K	B, D	S	P, R	DAL, IRC
RN^50@2003%&	200,000	1/20	C, N	H, J, K	B, D, F	S	P, R	DAL, IRC
RN^50@2033%&	203,000	1/20	C, N	H, J, K	B, D	S	P, R	DAL, IRC
RN^50@2053%&	205,000	1/20	C, N	H, J, K	B, D, F	S	P, R	DAL, IRC
RN^50@2083%&	208,000	1/20	C, N	H, J, K	B, D	S	P, R	DAL, IRC
RN^50@2103%&	210,000	1/20	C, N	H, J, K	B, D, F	S	P, R	DAL, IRC
	Resistance	Power	Term.	Char.	Resistance	Level 1	Level 2	
Part Number	Value (Ohms)	Rating (W)	Type (^)	(@)	Tolerance (%)	(FRL) (&)	(FRL) (&)	Manufacturer
RN^50@2133%&	213,000	1/20	C, N	H, J, K	B, D	S	P, R	DAL, IRC
RN^50@2153%&	215,000	1/20	C, N	H, J, K	B, D, F	S	P, R	DAL, IRC
RN^50@2183%&	218,000	1/20	C, N	H, J, K	B, D	S	P, R	DAL, IRC
RN^50@2213%&	221,000	1/20	C, N	H, J, K	B, D, F	S	P, R	DAL, IRC
RN^50@2233%&	223,000	1/20	C, N	H, J, K	B, D	S	P, R	DAL, IRC
RN^50@2263%&	226,000	1/20	C, N	H, J, K	B, D, F	S	P, R	DAL, IRC
RN^50@2293%&	229,000	1/20	C, N	H, J, K	B, D	S	P, R	DAL, IRC
	Resistance	Power	Term.	Char.	Resistance	Level 1	Level 2	
Part Number	Value (Ohms)	Rating (W)	Type (^)	(@)	Tolerance (%)	(FRL) (&)	(FRL) (&)	Manufacturer
RN^50@2323%&	232,000	1/20	C, N	H, J, K	B, D, F	S	P, R	DAL, IRC
RN^50@2343%&	234,000	1/20	C, N	H, J, K	B, D	S	P, R	DAL, IRC
RN^50@2373%&	237,000	1/20	C, N	H, J, K	B, D, F	S	P, R	DAL, IRC
RN^50@2403%&	240,000	1/20	C, N	H, J, K	B, D	S	P, R	DAL, IRC
RN^50@2433%&	243,000	1/20	C, N	H, J, K	B, D, F	S	P, R	DAL, IRC
RN^50@2463%&	246,000	1/20	C, N	H, J, K	B, D	S	P, R	DAL, IRC
RN^50@2493%&	249,000	1/20	C, N	H, J, K	B, D, F	S	P, R	DAL, IRC
	Resistance	Power	Term.	Char.	Resistance	Level 1	Level 2	

Part Number	Value (Ohms)	Rating (W)	Type (^)	(@)	Tolerance (%)	(FRL) (&)	(FRL) (&)	Manufacturer
RN^50@2523%&	252,000	1/20	C, N	H, J, K	B, D	S	P, R	DAL, IRC
RN^50@2553%&	255,000	1/20	C, N	H, J, K	B, D, F	S	P, R	DAL, IRC
RN^50@2583%&	258,000	1/20	C, N	H, J, K	B, D	S	P, R	DAL, IRC
RN^50@2613%&	261,000	1/20	C, N	H, J, K	B, D, F	S	P, R	DAL, IRC
RN^50@2643%&	264,000	1/20	C, N	H, J, K	B, D	S	P, R	DAL, IRC
RN^50@2673%&	267,000	1/20	C, N	H, J, K	B, D, F	S	P, R	DAL, IRC
RN^50@2713%&	271,000	1/20	C, N	H, J, K	B, D	S	P, R	DAL, IRC
	Resistance	Power	Term.	Char.	Resistance	Level 1	Level 2	
Part Number	Value (Ohms)	Rating (W)	Type (^)	(@)	Tolerance (%)	(FRL) (&)	(FRL) (&)	Manufacturer
RN^50@2743%&	274,000	1/20	C, N	H, J, K	B, D, F	S	P, R	DAL, IRC
RN^50@2773%&	277,000	1/20	C, N	H, J, K	B, D	S	P, R	DAL, IRC
RN^50@2803%&	280,000	1/20	C, N	H, J, K	B, D, F	S	P, R	DAL, IRC
RN^50@2843%&	284,000	1/20	C, N	H, J, K	B, D	S	P, R	DAL, IRC
RN^50@2873%&	287,000	1/20	C, N	H, J, K	B, D, F	S	P, R	DAL, IRC
RN^50@2913%&	291,000	1/20	C, N	H, J, K	B, D	S	P, R	DAL, IRC
RN^50@2943%&	294,000	1/20	C, N	H, J, K	B, D, F	S	P, R	DAL, IRC
	Resistance	Power	Term.	Char.	Resistance	Level 1	Level 2	
Part Number	Value (Ohms)	Rating (W)	Type (^)	(@)	Tolerance (%)	(FRL) (&)	(FRL) (&)	Manufacturer
RN^50@2983%&	298,000	1/20	C, N	H, J, K	B, D	S	P, R	DAL, IRC
RN^50@3013%&	301,000	1/20	C, N	H, J, K	B, D, F	S	P, R	DAL, IRC
RN^50@3053%&	305,000	1/20	C	H, J, K	B, D	S	P, R	DAL
RN^50@3093%&	309,000	1/20	C	H, J, K	B, D, F	S	P, R	DAL
RN^50@3123%&	312,000	1/20	C	H, J, K	B, D	S	P, R	DAL
RN^50@3163%&	316,000	1/20	C	H, J, K	B, D, F	S	P, R	DAL
RN^50@3203%&	320,000	1/20	C	H, J, K	B, D	S	P, R	DAL
	Resistance	Power	Term.	Char.	Resistance	Level 1	Level 2	
Part Number	Value (Ohms)	Rating (W)	Type (^)	(@)	Tolerance (%)	(FRL) (&)	(FRL) (&)	Manufacturer
RN^50@3243%&	324,000	1/20	C	H, J, K	B, D, F	S	P, R	DAL
RN^50@3283%&	328,000	1/20	C	H, J, K	B, D	S	P, R	DAL
RN^50@3323%&	332,000	1/20	C	H, J, K	B, D, F	S	P, R	DAL
RN^50@3363%&	336,000	1/20	C	H, J, K	B, D	S	P, R	DAL
RN^50@3403%&	340,000	1/20	C	H, J, K	B, D, F	S	P, R	DAL
RN^50@3443%&	344,000	1/20	C	H, J, K	B, D	S	P, R	DAL
RN^50@3483%&	348,000	1/20	C	H, J, K	B, D, F	S	P, R	DAL
	Resistance	Power	Term.	Char.	Resistance	Level 1	Level 2	
Part Number	Value (Ohms)	Rating (W)	Type (^)	(@)	Tolerance (%)	(FRL) (&)	(FRL) (&)	Manufacturer
RN^50@3523%&	352,000	1/20	C	H, J, K	B, D	S	P, R	DAL
RN^50@3573%&	357,000	1/20	C	H, J, K	B, D, F	S	P, R	DAL
RN^50@3613%&	361,000	1/20	C	H, J, K	B, D	S	P, R	DAL
RN^50@3653%&	365,000	1/20	C	H, J, K	B, D, F	S	P, R	DAL
RN^50@3703%&	370,000	1/20	C	H, J, K	B, D	S	P, R	DAL
RN^50@3743%&	374,000	1/20	C	H, J, K	B, D, F	S	P, R	DAL
RN^50@3793%&	379,000	1/20	C	H, J, K	B, D	S	P, R	DAL
	Resistance	Power	Term.	Char.	Resistance	Level 1	Level 2	
Part Number	Value (Ohms)	Rating (W)	Type (^)	(@)	Tolerance (%)	(FRL) (&)	(FRL) (&)	Manufacturer
RN^50@3833%&	383,000	1/20	C	H, J, K	B, D, F	S	P, R	DAL

RN^50@3883%&	388,000	1/20	C	H, J, K	B, D	S	P, R	DAL
RN^50@3923%&	392,000	1/20	C	H, J, K	B, D, F	S	P, R	DAL
RN^50@3973%&	397,000	1/20	C	H, J, K	B, D	S	P, R	DAL
RN^50@4023%&	402,000	1/20	C	H, J, K	B, D, F	S	P, R	DAL
RN^50@4073%&	407,000	1/20	C	H, J, K	B, D	S	P, R	DAL
RN^50@4123%&	412,000	1/20	C	H, J, K	B, D, F	S	P, R	DAL
	Resistance	Power	Term.	Char.	Resistance	Level 1	Level 2	
Part Number	Value (Ohms)	Rating (W)	Type (^)	(@)	Tolerance (%)	(FRL) (&)	(FRL) (&)	Manufacturer
RN^50@4173%&	417,000	1/20	C	H, J, K	B, D	S	P, R	DAL
RN^50@4223%&	422,000	1/20	C	H, J, K	B, D, F	S	P, R	DAL
RN^50@4273%&	427,000	1/20	C	H, J, K	B, D	S	P, R	DAL
RN^50@4323%&	432,000	1/20	C	H, J, K	B, D, F	S	P, R	DAL
RN^50@4373%&	437,000	1/20	C	H, J, K	B, D	S	P, R	DAL
RN^50@4423%&	442,000	1/20	C	H, J, K	B, D, F	S	P, R	DAL
RN^50@4483%&	448,000	1/20	C	H, J, K	B, D	S	P, R	DAL
	Resistance	Power	Term.	Char.	Resistance	Level 1	Level 2	
Part Number	Value (Ohms)	Rating (W)	Type (^)	(@)	Tolerance (%)	(FRL) (&)	(FRL) (&)	Manufacturer
RN^50@4533%&	453,000	1/20	C	H, J, K	B, D, F	S	P, R	DAL
RN^50@4593%&	459,000	1/20	C	H, J, K	B, D	S	P, R	DAL
RN^50@4643%&	464,000	1/20	C	H, J, K	B, D, F	S	P, R	DAL
RN^50@4703%&	470,000	1/20	C	H, J, K	B, D	S	P, R	DAL
RN^50@4753%&	475,000	1/20	C	H, J, K	B, D, F	S	P, R	DAL
RN^50@4813%&	481,000	1/20	C	H, J, K	B, D	S	P, R	DAL
RN^50@4873%&	487,000	1/20	C	H, J, K	B, D, F	S	P, R	DAL
	Resistance	Power	Term.	Char.	Resistance	Level 1	Level 2	
Part Number	Value (Ohms)	Rating (W)	Type (^)	(@)	Tolerance (%)	(FRL) (&)	(FRL) (&)	Manufacturer
RN^50@4933%&	493,000	1/20	C	H, J, K	B, D	S	P, R	DAL
RN^50@4993%&	499,000	1/20	C	H, J, K	B, D, F	S	P, R	DAL
RN^50@5053%&	505,000	1/20	C	H, J, K	B, D	S	P, R	DAL
RN^50@5113%&	511,000	1/20	C	H, J, K	B, D, F	S	P, R	DAL
RN^50@5173%&	517,000	1/20	C	H, J, K	B, D	S	P, R	DAL
RN^50@5233%&	523,000	1/20	C	H, J, K	B, D, F	S	P, R	DAL
RN^50@5303%&	530,000	1/20	C	H, J, K	B, D	S	P, R	DAL
	Resistance	Power	Term.	Char.	Resistance	Level 1	Level 2	
Part Number	Value (Ohms)	Rating (W)	Type (^)	(@)	Tolerance (%)	(FRL) (&)	(FRL) (&)	Manufacturer
RN^50@5363%&	536,000	1/20	C	H, J, K	B, D, F	S	P, R	DAL
RN^50@5423%&	542,000	1/20	C	H, J, K	B, D	S	P, R	DAL
RN^50@5493%&	549,000	1/20	C	H, J, K	B, D, F	S	P, R	DAL
RN^50@5563%&	556,000	1/20	C	H, J, K	B, D	S	P, R	DAL
RN^50@5623%&	562,000	1/20	C	H, J, K	B, D, F	S	P, R	DAL
RN^50@5693%&	569,000	1/20	C	H, J, K	B, D	S	P, R	DAL
RN^50@5763%&	576,000	1/20	C	H, J, K	B, D, F	S	P, R	DAL
	Resistance	Power	Term.	Char.	Resistance	Level 1	Level 2	
Part Number	Value (Ohms)	Rating (W)	Type (^)	(@)	Tolerance (%)	(FRL) (&)	(FRL) (&)	Manufacturer
RN^50@5833%&	583,000	1/20	C	H, J, K	B, D	S	P, R	DAL
RN^50@5903%&	590,000	1/20	C	H, J, K	B, D, F	S	P, R	DAL
RN^50@5973%&	597,000	1/20	C	H, J, K	B, D	S	P, R	DAL

RN^50@6043%&	604,000	1/20	C	H, J, K	B, D, F	S	P, R	DAL
RN^50@6123%&	612,000	1/20	C	H, J, K	B, D	S	P, R	DAL
RN^50@6193%&	619,000	1/20	C	H, J, K	B, D, F	S	P, R	DAL
RN^50@6263%&	626,000	1/20	C	H, J, K	B, D	S	P, R	DAL
	Resistance	Power	Term.	Char.	Resistance	Level 1	Level 2	
Part Number	Value (Ohms)	Rating (W)	Type (^)	(@)	Tolerance (%)	(FRL) (&)	(FRL) (&)	Manufacturer
RN^50@6343%&	634,000	1/20	C	H, J, K	B, D, F	S	P, R	DAL
RN^50@6423%&	642,000	1/20	C	H, J, K	B, D	S	P, R	DAL
RN^50@6493%&	649,000	1/20	C	H, J, K	B, D, F	S	P, R	DAL
RN^50@6573%&	657,000	1/20	C	H, J, K	B, D	S	P, R	DAL
RN^50@6653%&	665,000	1/20	C	H, J, K	B, D, F	S	P, R	DAL
RN^50@6733%&	673,000	1/20	C	H, J, K	B, D	S	P, R	DAL
RN^50@6813%&	681,000	1/20	C	H, J, K	B, D, F	S	P, R	DAL
	Resistance	Power	Term.	Char.	Resistance	Level 1	Level 2	
Part Number	Value (Ohms)	Rating (W)	Type (^)	(@)	Tolerance (%)	(FRL) (&)	(FRL) (&)	Manufacturer
RN^50@6903%&	690,000	1/20	C	H, J, K	B, D	S	P, R	DAL
RN^50@6983%&	698,000	1/20	C	H, J, K	B, D, F	S	P, R	DAL
RN^50@7063%&	706,000	1/20	C	H, J, K	B, D	S	P, R	DAL
RN^50@7153%&	715,000	1/20	C	H, J, K	B, D, F	S	P, R	DAL
RN^50@7233%&	723,000	1/20	C	H, J, K	B, D	S	P, R	DAL
RN^50@7323%&	732,000	1/20	C	H, J, K	B, D, F	S	P, R	DAL
RN^50@7413%&	741,000	1/20	C	H, J, K	B, D	S	P, R	DAL
	Resistance	Power	Term.	Char.	Resistance	Level 1	Level 2	
Part Number	Value (Ohms)	Rating (W)	Type (^)	(@)	Tolerance (%)	(FRL) (&)	(FRL) (&)	Manufacturer
RN^50@7503%&	750,000	1/20	C	H, J, K	B, D, F	S	P, R	DAL
RN^50@7593%&	759,000	1/20	C	H, J, K	B, D	S	P, R	DAL
RN^50@7683%&	768,000	1/20	C	H, J, K	B, D, F	S	P, R	DAL
RN^50@7773%&	777,000	1/20	C	H, J, K	B, D	S	P, R	DAL
RN^50@7873%&	787,000	1/20	C	H, J, K	B, D, F	S	P, R	DAL
RN^50@7963%&	796,000	1/20	C	H, J, K	B, D	S	P, R	DAL
	Resistance	Power	Term.	Char.	Resistance	Level 1	Level 2	
Part Number	Value (Ohms)	Rating (W)	Type (^)	(@)	Tolerance (%)	(FRL) (&)	(FRL) (&)	Manufacturer
	Resistance	Power	Term.	Char.	Resistance	Level 1	Level 2	
Part Number	Value (Ohms)	Rating (W)	Type (^)	(@)	Tolerance (%)	(FRL) (&)	(FRL) (&)	Manufacturer
	Resistance	Power	Term.	Char.	Resistance	Level 1	Level 2	
Part Number	Value (Ohms)	Rating (W)	Type (^)	(@)	Tolerance (%)	(FRL) (&)	(FRL) (&)	Manufacturer

RN^55 Film Resistors

	Resistance	Power	Term.	Char.	Res.	Level 1	Level 2	
Part Number	Value (Ohms)	Rating (W)	Type (^)	(@)	Tol. (%)	(FRL) (&)	(FRL) (&)	Manufacturer
RN^55@10R0%&	10.0	1/10	C, N, R	H, J, K, C, E	B, D, F	S	P, R	ANG,DAL,IRC
RN^55@10R1%&	10.1	1/10	C, N, R	H, J, K, C, E	B, D	S	P, R	ANG,DAL,IRC
RN^55@10R2%&	10.2	1/10	C, N, R	H, J, K, C, E	B, D, F	S	P, R	ANG,DAL,IRC
RN^55@10R4%&	10.4	1/10	C, N, R	H, J, K, C, E	B, D	S	P, R	ANG,DAL,IRC

RN^55@10R5%&	10.5	1/10	C, N, R	H, J, K, C, E	B, D, F	S	P, R	ANG,DAL,IRC
RN^55@10R6%&	10.6	1/10	C, N, R	H, J, K, C, E	B, D	S	P, R	ANG,DAL,IRC
RN^55@10R7%&	10.7	1/10	C, N, R	H, J, K, C, E	B, D, F	S	P, R	ANG,DAL,IRC
RN^55@10R9%&	10.9	1/10	C, N, R	H, J, K, C, E	B, D	S	P, R	ANG,DAL,IRC
RN^55@11R0%&	11.0	1/10	C, N, R	H, J, K, C, E	B, D, F	S	P, R	ANG,DAL,IRC
RN^55@11R1%&	11.1	1/10	C, N, R	H, J, K, C, E	B, D	S	P, R	ANG,DAL,IRC
RN^55@11R3%&	11.3	1/10	C, N, R	H, J, K, C, E	B, D, F	S	P, R	ANG,DAL,IRC
RN^55@11R4%&	11.4	1/10	C, N, R	H, J, K, C, E	B, D	S	P, R	ANG,DAL,IRC
RN^55@11R5%&	11.5	1/10	C, N, R	H, J, K, C, E	B, D, F	S	P, R	ANG,DAL,IRC
RN^55@11R7%&	11.7	1/10	C, N, R	H, J, K, C, E	B, D	S	P, R	ANG,DAL,IRC
RN^55@11R8%&	11.8	1/10	C, N, R	H, J, K, C, E	B, D, F	S	P, R	ANG,DAL,IRC
RN^55@12R0%&	12.0	1/10	C, N, R	H, J, K, C, E	B, D	S	P, R	ANG,DAL,IRC
RN^55@12R1%&	12.1	1/10	C, N, R	H, J, K, C, E	B, D, F	S	P, R	ANG,DAL,IRC
RN^55@12R3%&	12.3	1/10	C, N, R	H, J, K, C, E	B, D	S	P, R	ANG,DAL,IRC
RN^55@12R4%&	12.4	1/10	C, N, R	H, J, K, C, E	B, D, F	S	P, R	ANG,DAL,IRC
RN^55@12R6%&	12.6	1/10	C, N, R	H, J, K, C, E	B, D	S	P, R	ANG,DAL,IRC
RN^55@12R7%&	12.7	1/10	C, N, R	H, J, K, C, E	B, D, F	S	P, R	ANG,DAL,IRC
RN^55@12R9%&	12.9	1/10	C, N, R	H, J, K, C, E	B, D	S	P, R	ANG,DAL,IRC
RN^55@13R0%&	13.0	1/10	C, N, R	H, J, K, C, E	B, D, F	S	P, R	ANG,DAL,IRC
RN^55@13R2%&	13.2	1/10	C, N, R	H, J, K, C, E	B, D	S	P, R	ANG,DAL,IRC
RN^55@13R3%&	13.3	1/10	C, N, R	H, J, K, C, E	B, D, F	S	P, R	ANG,DAL,IRC
RN^55@13R5%&	13.5	1/10	C, N, R	H, J, K, C, E	B, D	S	P, R	ANG,DAL,IRC
RN^55@13R7%&	13.7	1/10	C, N, R	H, J, K, C, E	B, D, F	S	P, R	ANG,DAL,IRC
RN^55@13R8%&	13.8	1/10	C, N, R	H, J, K, C, E	B, D	S	P, R	ANG,DAL,IRC
RN^55@14R0%&	14.0	1/10	C, N, R	H, J, K, C, E	B, D, F	S	P, R	ANG,DAL,IRC
RN^55@14R2%&	14.2	1/10	C, N, R	H, J, K, C, E	B, D	S	P, R	ANG,DAL,IRC
RN^55@14R3%&	14.3	1/10	C, N, R	H, J, K, C, E	B, D, F	S	P, R	ANG,DAL,IRC
RN^55@14R5%&	14.5	1/10	C, N, R	H, J, K, C, E	B, D	S	P, R	ANG,DAL,IRC
RN^55@14R7%&	14.7	1/10	C, N, R	H, J, K, C, E	B, D, F	S	P, R	ANG,DAL,IRC
RN^55@14R9%&	14.9	1/10	C, N, R	H, J, K, C, E	B, D	S	P, R	ANG,DAL,IRC
RN^55@15R0%&	15.0	1/10	C, N, R	H, J, K, C, E	B, D, F	S	P, R	ANG,DAL,IRC
RN^55@15R2%&	15.2	1/10	C, N, R	H, J, K, C, E	B, D	S	P, R	ANG,DAL,IRC
RN^55@15R4%&	15.4	1/10	C, N, R	H, J, K, C, E	B, D, F	S	P, R	ANG,DAL,IRC
RN^55@15R6%&	15.6	1/10	C, N, R	H, J, K, C, E	B, D	S	P, R	ANG,DAL,IRC
RN^55@15R8%&	15.8	1/10	C, N, R	H, J, K, C, E	B, D, F	S	P, R	ANG,DAL,IRC
RN^55@16R0%&	16.0	1/10	C, N, R	H, J, K, C, E	B, D	S	P, R	ANG,DAL,IRC
RN^55@16R2%&	16.2	1/10	C, N, R	H, J, K, C, E	B, D, F	S	P, R	ANG,DAL,IRC
RN^55@16R4%&	16.4	1/10	C, N, R	H, J, K, C, E	B, D	S	P, R	ANG,DAL,IRC
RN^55@16R5%&	16.5	1/10	C, N, R	H, J, K, C, E	B, D, F	S	P, R	ANG,DAL,IRC
RN^55@16R7%&	16.7	1/10	C, N, R	H, J, K, C, E	B, D	S	P, R	ANG,DAL,IRC
RN^55@16R9%&	16.9	1/10	C, N, R	H, J, K, C, E	B, D, F	S	P, R	ANG,DAL,IRC
RN^55@17R2%&	17.2	1/10	C, N, R	H, J, K, C, E	B, D	S	P, R	ANG,DAL,IRC
RN^55@17R4%&	17.4	1/10	C, N, R	H, J, K, C, E	B, D, F	S	P, R	ANG,DAL,IRC
RN^55@17R6%&	17.6	1/10	C, N, R	H, J, K, C, E	B, D	S	P, R	ANG,DAL,IRC
RN^55@17R8%&	17.8	1/10	C, N, R	H, J, K, C, E	B, D, F	S	P, R	ANG,DAL,IRC
RN^55@18R0%&	18.0	1/10	C, N, R	H, J, K, C, E	B, D	S	P, R	ANG,DAL,IRC
RN^55@18R2%&	18.2	1/10	C, N, R	H, J, K, C, E	B, D, F	S	P, R	ANG,DAL,IRC

RN^55@18R4%&	18.4	1/10	C, N, R	H, J, K, C, E	B, D	S	P, R	ANG,DAL,IRC
RN^55@18R7%&	18.7	1/10	C, N, R	H, J, K, C, E	B, D, F	S	P, R	ANG,DAL,IRC
RN^55@18R9%&	18.9	1/10	C, N, R	H, J, K, C, E	B, D	S	P, R	ANG,DAL,IRC
RN^55@19R1%&	19.1	1/10	C, N, R	H, J, K, C, E	B, D, F	S	P, R	ANG,DAL,IRC
RN^55@19R3%&	19.3	1/10	C, N, R	H, J, K, C, E	B, D	S	P, R	ANG,DAL,IRC
RN^55@19R6%&	19.6	1/10	C, N, R	H, J, K, C, E	B, D, F	S	P, R	ANG,DAL,IRC
RN^55@19R8%&	19.8	1/10	C, N, R	H, J, K, C, E	B, D	S	P, R	ANG,DAL,IRC
RN^55@20R0%&	20.0	1/10	C, N, R	H, J, K, C, E	B, D, F	S	P, R	ANG,DAL,IRC
RN^55@20R3%&	20.3	1/10	C, N, R	H, J, K, C, E	B, D	S	P, R	ANG,DAL,IRC
RN^55@20R5%&	20.5	1/10	C, N, R	H, J, K, C, E	B, D, F	S	P, R	ANG,DAL,IRC
RN^55@20R8%&	20.8	1/10	C, N, R	H, J, K, C, E	B, D	S	P, R	ANG,DAL,IRC
RN^55@21R0%&	21.0	1/10	C, N, R	H, J, K, C, E	B, D, F	S	P, R	ANG,DAL,IRC
RN^55@21R3%&	21.3	1/10	C, N, R	H, J, K, C, E	B, D	S	P, R	ANG,DAL,IRC
RN^55@21R5%&	21.5	1/10	C, N, R	H, J, K, C, E	B, D, F	S	P, R	ANG,DAL,IRC
RN^55@21R8%&	21.8	1/10	C, N, R	H, J, K, C, E	B, D	S	P, R	ANG,DAL,IRC
RN^55@22R1%&	22.1	1/10	C, N, R	H, J, K, C, E	B, D, F	S	P, R	ANG,DAL,IRC
RN^55@22R3%&	22.3	1/10	C, N, R	H, J, K, C, E	B, D	S	P, R	ANG,DAL,IRC
RN^55@22R6%&	22.6	1/10	C, N, R	H, J, K, C, E	B, D, F	S	P, R	ANG,DAL,IRC
RN^55@22R9%&	22.9	1/10	C, N, R	H, J, K, C, E	B, D	S	P, R	ANG,DAL,IRC
RN^55@23R2%&	23.2	1/10	C, N, R	H, J, K, C, E	B, D, F	S	P, R	ANG,DAL,IRC
RN^55@23R4%&	23.4	1/10	C, N, R	H, J, K, C, E	B, D	S	P, R	ANG,DAL,IRC
RN^55@23R7%&	23.7	1/10	C, N, R	H, J, K, C, E	B, D, F	S	P, R	ANG,DAL,IRC
RN^55@24R0%&	24.0	1/10	C, N, R	H, J, K, C, E	B, D	S	P, R	ANG,DAL,IRC
RN^55@24R3%&	24.3	1/10	C, N, R	H, J, K, C, E	B, D, F	S	P, R	ANG,DAL,IRC
RN^55@24R6%&	24.6	1/10	C, N, R	H, J, K, C, E	B, D	S	P, R	ANG,DAL,IRC
RN^55@24R9%&	24.9	1/10	C, N, R	H, J, K, C, E	B, D, F	S	P, R	ANG,DAL,IRC
RN^55@25R2%&	25.2	1/10	C, N, R	H, J, K, C, E	B, D	S	P, R	ANG,DAL,IRC
RN^55@25R5%&	25.5	1/10	C, N, R	H, J, K, C, E	B, D, F	S	P, R	ANG,DAL,IRC
RN^55@25R8%&	25.8	1/10	C, N, R	H, J, K, C, E	B, D	S	P, R	ANG,DAL,IRC
RN^55@26R1%&	26.1	1/10	C, N, R	H, J, K, C, E	B, D, F	S	P, R	ANG,DAL,IRC
RN^55@26R4%&	26.4	1/10	C, N, R	H, J, K, C, E	B, D	S	P, R	ANG,DAL,IRC
RN^55@26R7%&	26.7	1/10	C, N, R	H, J, K, C, E	B, D, F	S	P, R	ANG,DAL,IRC
RN^55@27R1%&	27.1	1/10	C, N, R	H, J, K, C, E	B, D	S	P, R	ANG,DAL,IRC
RN^55@27R4%&	27.4	1/10	C, N, R	H, J, K, C, E	B, D, F	S	P, R	ANG,DAL,IRC
RN^55@27R7%&	27.7	1/10	C, N, R	H, J, K, C, E	B, D	S	P, R	ANG,DAL,IRC
RN^55@28R0%&	28.0	1/10	C, N, R	H, J, K, C, E	B, D, F	S	P, R	ANG,DAL,IRC
RN^55@28R4%&	28.4	1/10	C, N, R	H, J, K, C, E	B, D	S	P, R	ANG,DAL,IRC
RN^55@28R7%&	28.7	1/10	C, N, R	H, J, K, C, E	B, D, F	S	P, R	ANG,DAL,IRC
RN^55@29R1%&	29.1	1/10	C, N, R	H, J, K, C, E	B, D	S	P, R	ANG,DAL,IRC
RN^55@29R4%&	29.4	1/10	C, N, R	H, J, K, C, E	B, D, F	S	P, R	ANG,DAL,IRC
RN^55@29R8%&	29.8	1/10	C, N, R	H, J, K, C, E	B, D	S	P, R	ANG,DAL,IRC
RN^55@30R1%&	30.1	1/10	C, N, R	H, J, K, C, E	B, D, F	S	P, R	ANG,DAL,IRC
RN^55@30R5%&	30.5	1/10	C, N, R	H, J, K, C, E	B, D	S	P, R	ANG,DAL,IRC
RN^55@30R9%&	30.9	1/10	C, N, R	H, J, K, C, E	B, D, F	S	P, R	ANG,DAL,IRC
RN^55@31R2%&	31.2	1/10	C, N, R	H, J, K, C, E	B, D	S	P, R	ANG,DAL,IRC
RN^55@31R6%&	31.6	1/10	C, N, R	H, J, K, C, E	B, D, F	S	P, R	ANG,DAL,IRC
RN^55@32R0%&	32.0	1/10	C, N, R	H, J, K, C, E	B, D	S	P, R	ANG,DAL,IRC

RN^55@32R4%&	32.4	1/10	C, N, R	H, J, K, C, E	B, D, F	S	P, R	ANG,DAL,IRC
RN^55@32R8%&	32.8	1/10	C, N, R	H, J, K, C, E	B, D	S	P, R	ANG,DAL,IRC
RN^55@33R2%&	33.2	1/10	C, N, R	H, J, K, C, E	B, D, F	S	P, R	ANG,DAL,IRC
RN^55@33R6%&	33.6	1/10	C, N, R	H, J, K, C, E	B, D	S	P, R	ANG,DAL,IRC
RN^55@34R0%&	34.0	1/10	C, N, R	H, J, K, C, E	B, D, F	S	P, R	ANG,DAL,IRC
RN^55@34R4%&	34.4	1/10	C, N, R	H, J, K, C, E	B, D	S	P, R	ANG,DAL,IRC
RN^55@34R8%&	34.8	1/10	C, N, R	H, J, K, C, E	B, D, F	S	P, R	ANG,DAL,IRC
RN^55@35R2%&	35.2	1/10	C, N, R	H, J, K, C, E	B, D	S	P, R	ANG,DAL,IRC
RN^55@35R7%&	35.7	1/10	C, N, R	H, J, K, C, E	B, D, F	S	P, R	ANG,DAL,IRC
RN^55@36R1%&	36.1	1/10	C, N, R	H, J, K, C, E	B, D	S	P, R	ANG,DAL,IRC
RN^55@36R5%&	36.5	1/10	C, N, R	H, J, K, C, E	B, D, F	S	P, R	ANG,DAL,IRC
RN^55@37R0%&	37.0	1/10	C, N, R	H, J, K, C, E	B, D	S	P, R	ANG,DAL,IRC
RN^55@37R4%&	37.4	1/10	C, N, R	H, J, K, C, E	B, D, F	S	P, R	ANG,DAL,IRC
RN^55@37R9%&	37.9	1/10	C, N, R	H, J, K, C, E	B, D	S	P, R	ANG,DAL,IRC
RN^55@38R3%&	38.3	1/10	C, N, R	H, J, K, C, E	B, D, F	S	P, R	ANG,DAL,IRC
RN^55@38R8%&	38.8	1/10	C, N, R	H, J, K, C, E	B, D	S	P, R	ANG,DAL,IRC
RN^55@39R2%&	39.2	1/10	C, N, R	H, J, K, C, E	B, D, F	S	P, R	ANG,DAL,IRC
RN^55@39R7%&	39.7	1/10	C, N, R	H, J, K, C, E	B, D	S	P, R	ANG,DAL,IRC
RN^55@40R2%&	40.2	1/10	C, N, R	H, J, K, C, E	B, D, F	S	P, R	ANG,DAL,IRC
RN^55@40R7%&	40.7	1/10	C, N, R	H, J, K, C, E	B, D	S	P, R	ANG,DAL,IRC
RN^55@41R2%&	41.2	1/10	C, N, R	H, J, K, C, E	B, D, F	S	P, R	ANG,DAL,IRC
RN^55@41R7%&	41.7	1/10	C, N, R	H, J, K, C, E	B, D	S	P, R	ANG,DAL,IRC
RN^55@42R2%&	42.2	1/10	C, N, R	H, J, K, C, E	B, D, F	S	P, R	ANG,DAL,IRC
RN^55@42R7%&	42.7	1/10	C, N, R	H, J, K, C, E	B, D	S	P, R	ANG,DAL,IRC
RN^55@43R2%&	43.2	1/10	C, N, R	H, J, K, C, E	B, D, F	S	P, R	ANG,DAL,IRC
RN^55@43R7%&	43.7	1/10	C, N, R	H, J, K, C, E	B, D	S	P, R	ANG,DAL,IRC
RN^55@44R2%&	44.2	1/10	C, N, R	H, J, K, C, E	B, D, F	S	P, R	ANG,DAL,IRC
RN^55@44R8%&	44.8	1/10	C, N, R	H, J, K, C, E	B, D	S	P, R	ANG,DAL,IRC
RN^55@45R3%&	45.3	1/10	C, N, R	H, J, K, C, E	B, D, F	S	P, R	ANG,DAL,IRC
RN^55@45R9%&	45.9	1/10	C, N, R	H, J, K, C, E	B, D	S	P, R	ANG,DAL,IRC
RN^55@46R4%&	46.4	1/10	C, N, R	H, J, K, C, E	B, D, F	S	P, R	ANG,DAL,IRC
RN^55@47R0%&	47.0	1/10	C, N, R	H, J, K, C, E	B, D	S	P, R	ANG,DAL,IRC
RN^55@47R5%&	47.5	1/10	C, N, R	H, J, K, C, E	B, D, F	S	P, R	ANG,DAL,IRC
RN^55@48R1%&	48.1	1/10	C, N, R	H, J, K, C, E	B, D	S	P, R	ANG,DAL,IRC
RN^55@48R7%&	48.7	1/10	C, N, R	H, J, K, C, E	B, D, F	S	P, R	ANG,DAL,IRC
RN^55@49R3%&	49.3	1/10	C, N, R	H, J, K, C, E	B, D	S	P, R	ANG,DAL,IRC
RN^55@49R9%&	49.9	1/10	C, N, R	H, J, K, C, E	B, D, F	S	P, R	ANG,DAL,IRC
RN^55@50R5%&	50.5	1/10	C, N, R	H, J, K, C, E	B, D	S	P, R	ANG,DAL,IRC
RN^55@51R1%&	51.1	1/10	C, N, R	H, J, K, C, E	B, D, F	S	P, R	ANG,DAL,IRC
RN^55@51R7%&	51.7	1/10	C, N, R	H, J, K, C, E	B, D	S	P, R	ANG,DAL,IRC
RN^55@52R3%&	52.3	1/10	C, N, R	H, J, K, C, E	B, D, F	S	P, R	ANG,DAL,IRC
RN^55@53R0%&	53.0	1/10	C, N, R	H, J, K, C, E	B, D	S	P, R	ANG,DAL,IRC
RN^55@53R6%&	53.6	1/10	C, N, R	H, J, K, C, E	B, D, F	S	P, R	ANG,DAL,IRC
RN^55@54R2%&	54.2	1/10	C, N, R	H, J, K, C, E	B, D	S	P, R	ANG,DAL,IRC
RN^55@54R9%&	54.9	1/10	C, N, R	H, J, K, C, E	B, D, F	S	P, R	ANG,DAL,IRC
RN^55@55R6%&	55.6	1/10	C, N, R	H, J, K, C, E	B, D	S	P, R	ANG,DAL,IRC
RN^55@56R2%&	56.2	1/10	C, N, R	H, J, K, C, E	B, D, F	S	P, R	ANG,DAL,IRC

RN^55@56R9%&	56.9	1/10	C, N, R	H, J, K, C, E	B, D	S	P, R	ANG,DAL,IRC
RN^55@57R6%&	57.6	1/10	C, N, R	H, J, K, C, E	B, D, F	S	P, R	ANG,DAL,IRC
RN^55@58R3%&	58.3	1/10	C, N, R	H, J, K, C, E	B, D	S	P, R	ANG,DAL,IRC
RN^55@59R0%&	59.0	1/10	C, N, R	H, J, K, C, E	B, D, F	S	P, R	ANG,DAL,IRC
RN^55@59R7%&	59.7	1/10	C, N, R	H, J, K, C, E	B, D	S	P, R	ANG,DAL,IRC
RN^55@60R4%&	60.4	1/10	C, N, R	H, J, K, C, E	B, D, F	S	P, R	ANG,DAL,IRC
RN^55@61R2%&	61.2	1/10	C, N, R	H, J, K, C, E	B, D	S	P, R	ANG,DAL,IRC
RN^55@61R9%&	61.9	1/10	C, N, R	H, J, K, C, E	B, D, F	S	P, R	ANG,DAL,IRC
RN^55@62R6%&	62.6	1/10	C, N, R	H, J, K, C, E	B, D	S	P, R	ANG,DAL,IRC
RN^55@63R4%&	63.4	1/10	C, N, R	H, J, K, C, E	B, D, F	S	P, R	ANG,DAL,IRC
RN^55@64R2%&	64.2	1/10	C, N, R	H, J, K, C, E	B, D	S	P, R	ANG,DAL,IRC
RN^55@64R9%&	64.9	1/10	C, N, R	H, J, K, C, E	B, D, F	S	P, R	ANG,DAL,IRC
RN^55@65R7%&	65.7	1/10	C, N, R	H, J, K, C, E	B, D	S	P, R	ANG,DAL,IRC
RN^55@66R5%&	66.5	1/10	C, N, R	H, J, K, C, E	B, D, F	S	P, R	ANG,DAL,IRC
RN^55@67R3%&	67.3	1/10	C, N, R	H, J, K, C, E	B, D	S	P, R	ANG,DAL,IRC
RN^55@68R1%&	68.1	1/10	C, N, R	H, J, K, C, E	B, D, F	S	P, R	ANG,DAL,IRC
RN^55@69R0%&	69.0	1/10	C, N, R	H, J, K, C, E	B, D	S	P, R	ANG,DAL,IRC
RN^55@69R8%&	69.8	1/10	C, N, R	H, J, K, C, E	B, D, F	S	P, R	ANG,DAL,IRC
RN^55@70R6%&	70.6	1/10	C, N, R	H, J, K, C, E	B, D	S	P, R	ANG,DAL,IRC
RN^55@71R5%&	71.5	1/10	C, N, R	H, J, K, C, E	B, D, F	S	P, R	ANG,DAL,IRC
RN^55@72R3%&	72.3	1/10	C, N, R	H, J, K, C, E	B, D	S	P, R	ANG,DAL,IRC
RN^55@73R2%&	73.2	1/10	C, N, R	H, J, K, C, E	B, D, F	S	P, R	ANG,DAL,IRC
RN^55@74R1%&	74.1	1/10	C, N, R	H, J, K, C, E	B, D	S	P, R	ANG,DAL,IRC
RN^55@75R0%&	75.0	1/10	C, N, R	H, J, K, C, E	B, D, F	S	P, R	ANG,DAL,IRC
RN^55@75R9%&	75.9	1/10	C, N, R	H, J, K, C, E	B, D	S	P, R	ANG,DAL,IRC
RN^55@76R8%&	76.8	1/10	C, N, R	H, J, K, C, E	B, D, F	S	P, R	ANG,DAL,IRC
RN^55@77R7%&	77.7	1/10	C, N, R	H, J, K, C, E	B, D	S	P, R	ANG,DAL,IRC
RN^55@78R7%&	78.7	1/10	C, N, R	H, J, K, C, E	B, D, F	S	P, R	ANG,DAL,IRC
RN^55@79R6%&	79.6	1/10	C, N, R	H, J, K, C, E	B, D	S	P, R	ANG,DAL,IRC
RN^55@80R6%&	80.6	1/10	C, N, R	H, J, K, C, E	B, D, F	S	P, R	ANG,DAL,IRC
RN^55@81R6%&	81.6	1/10	C, N, R	H, J, K, C, E	B, D	S	P, R	ANG,DAL,IRC
RN^55@82R5%&	82.5	1/10	C, N, R	H, J, K, C, E	B, D, F	S	P, R	ANG,DAL,IRC
RN^55@83R5%&	83.5	1/10	C, N, R	H, J, K, C, E	B, D	S	P, R	ANG,DAL,IRC
RN^55@84R5%&	84.5	1/10	C, N, R	H, J, K, C, E	B, D, F	S	P, R	ANG,DAL,IRC
RN^55@85R6%&	85.6	1/10	C, N, R	H, J, K, C, E	B, D	S	P, R	ANG,DAL,IRC
RN^55@86R6%&	86.6	1/10	C, N, R	H, J, K, C, E	B, D, F	S	P, R	ANG,DAL,IRC
RN^55@87R6%&	87.6	1/10	C, N, R	H, J, K, C, E	B, D	S	P, R	ANG,DAL,IRC
RN^55@88R7%&	88.7	1/10	C, N, R	H, J, K, C, E	B, D, F	S	P, R	ANG,DAL,IRC
RN^55@89R8%&	89.8	1/10	C, N, R	H, J, K, C, E	B, D	S	P, R	ANG,DAL,IRC
RN^55@90R9%&	90.9	1/10	C, N, R	H, J, K, C, E	B, D, F	S	P, R	ANG,DAL,IRC
RN^55@92R0%&	92.0	1/10	C, N, R	H, J, K, C, E	B, D	S	P, R	ANG,DAL,IRC
RN^55@93R1%&	93.1	1/10	C, N, R	H, J, K, C, E	B, D, F	S	P, R	ANG,DAL,IRC
RN^55@94R2%&	94.2	1/10	C, N, R	H, J, K, C, E	B, D	S	P, R	ANG,DAL,IRC
RN^55@95R3%&	95.3	1/10	C, N, R	H, J, K, C, E	B, D, F	S	P, R	ANG,DAL,IRC
RN^55@96R5%&	96.5	1/10	C, N, R	H, J, K, C, E	B, D	S	P, R	ANG,DAL,IRC
RN^55@97R6%&	97.6	1/10	C, N, R	H, J, K, C, E	B, D, F	S	P, R	ANG,DAL,IRC
RN^55@98R8%&	98.8	1/10	C, N, R	H, J, K, C, E	B, D	S	P, R	ANG,DAL,IRC

RN^55@1000%&	100	1/10	C, N, R	H, J, K, C, E	B, D, F	S	P, R	ANG,DAL,IRC
RN^55@1010%&	101	1/10	C, N, R	H, J, K, C, E	B, D	S	P, R	ANG,DAL,IRC
RN^55@1020%&	102	1/10	C, N, R	H, J, K, C, E	B, D, F	S	P, R	ANG,DAL,IRC
RN^55@1040%&	104	1/10	C, N, R	H, J, K, C, E	B, D	S	P, R	ANG,DAL,IRC
RN^55@1050%&	105	1/10	C, N, R	H, J, K, C, E	B, D, F	S	P, R	ANG,DAL,IRC
RN^55@1060%&	106	1/10	C, N, R	H, J, K, C, E	B, D	S	P, R	ANG,DAL,IRC
RN^55@1070%&	107	1/10	C, N, R	H, J, K, C, E	B, D, F	S	P, R	ANG,DAL,IRC
RN^55@1090%&	109	1/10	C, N, R	H, J, K, C, E	B, D	S	P, R	ANG,DAL,IRC
RN^55@1100%&	110	1/10	C, N, R	H, J, K, C, E	B, D, F	S	P, R	ANG,DAL,IRC
RN^55@1110%&	111	1/10	C, N, R	H, J, K, C, E	B, D	S	P, R	ANG,DAL,IRC
RN^55@1130%&	113	1/10	C, N, R	H, J, K, C, E	B, D, F	S	P, R	ANG,DAL,IRC
RN^55@1140%&	114	1/10	C, N, R	H, J, K, C, E	B, D	S	P, R	ANG,DAL,IRC
RN^55@1150%&	115	1/10	C, N, R	H, J, K, C, E	B, D, F	S	P, R	ANG,DAL,IRC
RN^55@1170%&	117	1/10	C, N, R	H, J, K, C, E	B, D	S	P, R	ANG,DAL,IRC
RN^55@1180%&	118	1/10	C, N, R	H, J, K, C, E	B, D, F	S	P, R	ANG,DAL,IRC
RN^55@1200%&	120	1/10	C, N, R	H, J, K, C, E	B, D	S	P, R	ANG,DAL,IRC
RN^55@1210%&	121	1/10	C, N, R	H, J, K, C, E	B, D, F	S	P, R	ANG,DAL,IRC
RN^55@1230%&	123	1/10	C, N, R	H, J, K, C, E	B, D	S	P, R	ANG,DAL,IRC
RN^55@1240%&	124	1/10	C, N, R	H, J, K, C, E	B, D, F	S	P, R	ANG,DAL,IRC
RN^55@1260%&	126	1/10	C, N, R	H, J, K, C, E	B, D	S	P, R	ANG,DAL,IRC
RN^55@1270%&	127	1/10	C, N, R	H, J, K, C, E	B, D, F	S	P, R	ANG,DAL,IRC
RN^55@1290%&	129	1/10	C, N, R	H, J, K, C, E	B, D	S	P, R	ANG,DAL,IRC
RN^55@1300%&	130	1/10	C, N, R	H, J, K, C, E	B, D, F	S	P, R	ANG,DAL,IRC
RN^55@1320%&	132	1/10	C, N, R	H, J, K, C, E	B, D	S	P, R	ANG,DAL,IRC
RN^55@1330%&	133	1/10	C, N, R	H, J, K, C, E	B, D, F	S	P, R	ANG,DAL,IRC
RN^55@1350%&	135	1/10	C, N, R	H, J, K, C, E	B, D	S	P, R	ANG,DAL,IRC
RN^55@1370%&	137	1/10	C, N, R	H, J, K, C, E	B, D, F	S	P, R	ANG,DAL,IRC
RN^55@1380%&	138	1/10	C, N, R	H, J, K, C, E	B, D	S	P, R	ANG,DAL,IRC
RN^55@1400%&	140	1/10	C, N, R	H, J, K, C, E	B, D, F	S	P, R	ANG,DAL,IRC
RN^55@1420%&	142	1/10	C, N, R	H, J, K, C, E	B, D	S	P, R	ANG,DAL,IRC
RN^55@1430%&	143	1/10	C, N, R	H, J, K, C, E	B, D, F	S	P, R	ANG,DAL,IRC
RN^55@1450%&	145	1/10	C, N, R	H, J, K, C, E	B, D	S	P, R	ANG,DAL,IRC
RN^55@1470%&	147	1/10	C, N, R	H, J, K, C, E	B, D, F	S	P, R	ANG,DAL,IRC
RN^55@1490%&	149	1/10	C, N, R	H, J, K, C, E	B, D	S	P, R	ANG,DAL,IRC
RN^55@1500%&	150	1/10	C, N, R	H, J, K, C, E	B, D, F	S	P, R	ANG,DAL,IRC
RN^55@1520%&	152	1/10	C, N, R	H, J, K, C, E	B, D	S	P, R	ANG,DAL,IRC
RN^55@1540%&	154	1/10	C, N, R	H, J, K, C, E	B, D, F	S	P, R	ANG,DAL,IRC
RN^55@1560%&	156	1/10	C, N, R	H, J, K, C, E	B, D	S	P, R	ANG,DAL,IRC
RN^55@1580%&	158	1/10	C, N, R	H, J, K, C, E	B, D, F	S	P, R	ANG,DAL,IRC
RN^55@1600%&	160	1/10	C, N, R	H, J, K, C, E	B, D	S	P, R	ANG,DAL,IRC
RN^55@1620%&	162	1/10	C, N, R	H, J, K, C, E	B, D, F	S	P, R	ANG,DAL,IRC
RN^55@1640%&	164	1/10	C, N, R	H, J, K, C, E	B, D	S	P, R	ANG,DAL,IRC
RN^55@1650%&	165	1/10	C, N, R	H, J, K, C, E	B, D, F	S	P, R	ANG,DAL,IRC
RN^55@1670%&	167	1/10	C, N, R	H, J, K, C, E	B, D	S	P, R	ANG,DAL,IRC
RN^55@1690%&	169	1/10	C, N, R	H, J, K, C, E	B, D, F	S	P, R	ANG,DAL,IRC
RN^55@1720%&	172	1/10	C, N, R	H, J, K, C, E	B, D	S	P, R	ANG,DAL,IRC
RN^55@1740%&	174	1/10	C, N, R	H, J, K, C, E	B, D, F	S	P, R	ANG,DAL,IRC

RN^55@1760%&	176	1/10	C, N, R	H, J, K, C, E	B, D	S	P, R	ANG,DAL,IRC
RN^55@1780%&	178	1/10	C, N, R	H, J, K, C, E	B, D, F	S	P, R	ANG,DAL,IRC
RN^55@1800%&	180	1/10	C, N, R	H, J, K, C, E	B, D	S	P, R	ANG,DAL,IRC
RN^55@1820%&	182	1/10	C, N, R	H, J, K, C, E	B, D, F	S	P, R	ANG,DAL,IRC
RN^55@1840%&	184	1/10	C, N, R	H, J, K, C, E	B, D	S	P, R	ANG,DAL,IRC
RN^55@1870%&	187	1/10	C, N, R	H, J, K, C, E	B, D, F	S	P, R	ANG,DAL,IRC
RN^55@1890%&	189	1/10	C, N, R	H, J, K, C, E	B, D	S	P, R	ANG,DAL,IRC
RN^55@1910%&	191	1/10	C, N, R	H, J, K, C, E	B, D, F	S	P, R	ANG,DAL,IRC
RN^55@1930%&	193	1/10	C, N, R	H, J, K, C, E	B, D	S	P, R	ANG,DAL,IRC
RN^55@1960%&	196	1/10	C, N, R	H, J, K, C, E	B, D, F	S	P, R	ANG,DAL,IRC
RN^55@1980%&	198	1/10	C, N, R	H, J, K, C, E	B, D	S	P, R	ANG,DAL,IRC
RN^55@2000%&	200	1/10	C, N, R	H, J, K, C, E	B, D, F	S	P, R	ANG,DAL,IRC
RN^55@2030%&	203	1/10	C, N, R	H, J, K, C, E	B, D	S	P, R	ANG,DAL,IRC
RN^55@2050%&	205	1/10	C, N, R	H, J, K, C, E	B, D, F	S	P, R	ANG,DAL,IRC
RN^55@2080%&	208	1/10	C, N, R	H, J, K, C, E	B, D	S	P, R	ANG,DAL,IRC
RN^55@2100%&	210	1/10	C, N, R	H, J, K, C, E	B, D, F	S	P, R	ANG,DAL,IRC
RN^55@2130%&	213	1/10	C, N, R	H, J, K, C, E	B, D	S	P, R	ANG,DAL,IRC
RN^55@2150%&	215	1/10	C, N, R	H, J, K, C, E	B, D, F	S	P, R	ANG,DAL,IRC
RN^55@2180%&	218	1/10	C, N, R	H, J, K, C, E	B, D	S	P, R	ANG,DAL,IRC
RN^55@2210%&	221	1/10	C, N, R	H, J, K, C, E	B, D, F	S	P, R	ANG,DAL,IRC
RN^55@2230%&	223	1/10	C, N, R	H, J, K, C, E	B, D	S	P, R	ANG,DAL,IRC
RN^55@2260%&	226	1/10	C, N, R	H, J, K, C, E	B, D, F	S	P, R	ANG,DAL,IRC
RN^55@2290%&	229	1/10	C, N, R	H, J, K, C, E	B, D	S	P, R	ANG,DAL,IRC
RN^55@2320%&	232	1/10	C, N, R	H, J, K, C, E	B, D, F	S	P, R	ANG,DAL,IRC
RN^55@2340%&	234	1/10	C, N, R	H, J, K, C, E	B, D	S	P, R	ANG,DAL,IRC
RN^55@2370%&	237	1/10	C, N, R	H, J, K, C, E	B, D, F	S	P, R	ANG,DAL,IRC
RN^55@2400%&	240	1/10	C, N, R	H, J, K, C, E	B, D	S	P, R	ANG,DAL,IRC
RN^55@2430%&	243	1/10	C, N, R	H, J, K, C, E	B, D, F	S	P, R	ANG,DAL,IRC
RN^55@2460%&	246	1/10	C, N, R	H, J, K, C, E	B, D	S	P, R	ANG,DAL,IRC
RN^55@2490%&	249	1/10	C, N, R	H, J, K, C, E	B, D, F	S	P, R	ANG,DAL,IRC
RN^55@2520%&	252	1/10	C, N, R	H, J, K, C, E	B, D	S	P, R	ANG,DAL,IRC
RN^55@2550%&	255	1/10	C, N, R	H, J, K, C, E	B, D, F	S	P, R	ANG,DAL,IRC
RN^55@2580%&	258	1/10	C, N, R	H, J, K, C, E	B, D	S	P, R	ANG,DAL,IRC
RN^55@2610%&	261	1/10	C, N, R	H, J, K, C, E	B, D, F	S	P, R	ANG,DAL,IRC
RN^55@2640%&	264	1/10	C, N, R	H, J, K, C, E	B, D	S	P, R	ANG,DAL,IRC
RN^55@2670%&	267	1/10	C, N, R	H, J, K, C, E	B, D, F	S	P, R	ANG,DAL,IRC
RN^55@2710%&	271	1/10	C, N, R	H, J, K, C, E	B, D	S	P, R	ANG,DAL,IRC
RN^55@2740%&	274	1/10	C, N, R	H, J, K, C, E	B, D, F	S	P, R	ANG,DAL,IRC
RN^55@2770%&	277	1/10	C, N, R	H, J, K, C, E	B, D	S	P, R	ANG,DAL,IRC
RN^55@2800%&	280	1/10	C, N, R	H, J, K, C, E	B, D, F	S	P, R	ANG,DAL,IRC
RN^55@2840%&	284	1/10	C, N, R	H, J, K, C, E	B, D	S	P, R	ANG,DAL,IRC
RN^55@2870%&	287	1/10	C, N, R	H, J, K, C, E	B, D, F	S	P, R	ANG,DAL,IRC
RN^55@2910%&	291	1/10	C, N, R	H, J, K, C, E	B, D	S	P, R	ANG,DAL,IRC
RN^55@2940%&	294	1/10	C, N, R	H, J, K, C, E	B, D, F	S	P, R	ANG,DAL,IRC
RN^55@2980%&	298	1/10	C, N, R	H, J, K, C, E	B, D	S	P, R	ANG,DAL,IRC
RN^55@3010%&	301	1/10	C, N, R	H, J, K, C, E	B, D, F	S	P, R	ANG,DAL,IRC
RN^55@3050%&	305	1/10	C, N, R	H, J, K, C, E	B, D	S	P, R	ANG,DAL,IRC

RN^55@3090%&	309	1/10	C, N, R	H, J, K, C, E	B, D, F	S	P, R	ANG,DAL,IRC
RN^55@3120%&	312	1/10	C, N, R	H, J, K, C, E	B, D	S	P, R	ANG,DAL,IRC
RN^55@3160%&	316	1/10	C, N, R	H, J, K, C, E	B, D, F	S	P, R	ANG,DAL,IRC
RN^55@3200%&	320	1/10	C, N, R	H, J, K, C, E	B, D	S	P, R	ANG,DAL,IRC
RN^55@3240%&	324	1/10	C, N, R	H, J, K, C, E	B, D, F	S	P, R	ANG,DAL,IRC
RN^55@3280%&	328	1/10	C, N, R	H, J, K, C, E	B, D	S	P, R	ANG,DAL,IRC
RN^55@3320%&	332	1/10	C, N, R	H, J, K, C, E	B, D, F	S	P, R	ANG,DAL,IRC
RN^55@3360%&	336	1/10	C, N, R	H, J, K, C, E	B, D	S	P, R	ANG,DAL,IRC
RN^55@3400%&	340	1/10	C, N, R	H, J, K, C, E	B, D, F	S	P, R	ANG,DAL,IRC
RN^55@3440%&	344	1/10	C, N, R	H, J, K, C, E	B, D	S	P, R	ANG,DAL,IRC
RN^55@3480%&	348	1/10	C, N, R	H, J, K, C, E	B, D, F	S	P, R	ANG,DAL,IRC
RN^55@3520%&	352	1/10	C, N, R	H, J, K, C, E	B, D	S	P, R	ANG,DAL,IRC
RN^55@3570%&	357	1/10	C, N, R	H, J, K, C, E	B, D, F	S	P, R	ANG,DAL,IRC
RN^55@3610%&	361	1/10	C, N, R	H, J, K, C, E	B, D	S	P, R	ANG,DAL,IRC
RN^55@3650%&	365	1/10	C, N, R	H, J, K, C, E	B, D, F	S	P, R	ANG,DAL,IRC
RN^55@3700%&	370	1/10	C, N, R	H, J, K, C, E	B, D	S	P, R	ANG,DAL,IRC
RN^55@3740%&	374	1/10	C, N, R	H, J, K, C, E	B, D, F	S	P, R	ANG,DAL,IRC
RN^55@3790%&	379	1/10	C, N, R	H, J, K, C, E	B, D	S	P, R	ANG,DAL,IRC
RN^55@3830%&	383	1/10	C, N, R	H, J, K, C, E	B, D, F	S	P, R	ANG,DAL,IRC
RN^55@3880%&	388	1/10	C, N, R	H, J, K, C, E	B, D	S	P, R	ANG,DAL,IRC
RN^55@3920%&	392	1/10	C, N, R	H, J, K, C, E	B, D, F	S	P, R	ANG,DAL,IRC
RN^55@3970%&	397	1/10	C, N, R	H, J, K, C, E	B, D	S	P, R	ANG,DAL,IRC
RN^55@4020%&	402	1/10	C, N, R	H, J, K, C, E	B, D, F	S	P, R	ANG,DAL,IRC
RN^55@4070%&	407	1/10	C, N, R	H, J, K, C, E	B, D	S	P, R	ANG,DAL,IRC
RN^55@4120%&	412	1/10	C, N, R	H, J, K, C, E	B, D, F	S	P, R	ANG,DAL,IRC
RN^55@4170%&	417	1/10	C, N, R	H, J, K, C, E	B, D	S	P, R	ANG,DAL,IRC
RN^55@4220%&	422	1/10	C, N, R	H, J, K, C, E	B, D, F	S	P, R	ANG,DAL,IRC
RN^55@4270%&	427	1/10	C, N, R	H, J, K, C, E	B, D	S	P, R	ANG,DAL,IRC
RN^55@4320%&	432	1/10	C, N, R	H, J, K, C, E	B, D, F	S	P, R	ANG,DAL,IRC
RN^55@4370%&	437	1/10	C, N, R	H, J, K, C, E	B, D	S	P, R	ANG,DAL,IRC
RN^55@4420%&	442	1/10	C, N, R	H, J, K, C, E	B, D, F	S	P, R	ANG,DAL,IRC
RN^55@4480%&	448	1/10	C, N, R	H, J, K, C, E	B, D	S	P, R	ANG,DAL,IRC
RN^55@4530%&	453	1/10	C, N, R	H, J, K, C, E	B, D, F	S	P, R	ANG,DAL,IRC
RN^55@4590%&	459	1/10	C, N, R	H, J, K, C, E	B, D	S	P, R	ANG,DAL,IRC
RN^55@4640%&	464	1/10	C, N, R	H, J, K, C, E	B, D, F	S	P, R	ANG,DAL,IRC
RN^55@4700%&	470	1/10	C, N, R	H, J, K, C, E	B, D	S	P, R	ANG,DAL,IRC
RN^55@4750%&	475	1/10	C, N, R	H, J, K, C, E	B, D, F	S	P, R	ANG,DAL,IRC
RN^55@4810%&	481	1/10	C, N, R	H, J, K, C, E	B, D	S	P, R	ANG,DAL,IRC
RN^55@4870%&	487	1/10	C, N, R	H, J, K, C, E	B, D, F	S	P, R	ANG,DAL,IRC
RN^55@4930%&	493	1/10	C, N, R	H, J, K, C, E	B, D	S	P, R	ANG,DAL,IRC
RN^55@4990%&	499	1/10	C, N, R	H, J, K, C, E	B, D, F	S	P, R	ANG,DAL,IRC
RN^55@5050%&	505	1/10	C, N, R	H, J, K, C, E	B, D	S	P, R	ANG,DAL,IRC
RN^55@5110%&	511	1/10	C, N, R	H, J, K, C, E	B, D, F	S	P, R	ANG,DAL,IRC
RN^55@5170%&	517	1/10	C, N, R	H, J, K, C, E	B, D	S	P, R	ANG,DAL,IRC
RN^55@5230%&	523	1/10	C, N, R	H, J, K, C, E	B, D, F	S	P, R	ANG,DAL,IRC
RN^55@5300%&	530	1/10	C, N, R	H, J, K, C, E	B, D	S	P, R	ANG,DAL,IRC
RN^55@5360%&	536	1/10	C, N, R	H, J, K, C, E	B, D, F	S	P, R	ANG,DAL,IRC

RN^55@5420%&	542	1/10	C, N, R	H, J, K, C, E	B, D	S	P, R	ANG,DAL,IRC
RN^55@5490%&	549	1/10	C, N, R	H, J, K, C, E	B, D, F	S	P, R	ANG,DAL,IRC
RN^55@5560%&	556	1/10	C, N, R	H, J, K, C, E	B, D	S	P, R	ANG,DAL,IRC
RN^55@5620%&	562	1/10	C, N, R	H, J, K, C, E	B, D, F	S	P, R	ANG,DAL,IRC
RN^55@5690%&	569	1/10	C, N, R	H, J, K, C, E	B, D	S	P, R	ANG,DAL,IRC
RN^55@5760%&	576	1/10	C, N, R	H, J, K, C, E	B, D, F	S	P, R	ANG,DAL,IRC
RN^55@5830%&	583	1/10	C, N, R	H, J, K, C, E	B, D	S	P, R	ANG,DAL,IRC
RN^55@5900%&	590	1/10	C, N, R	H, J, K, C, E	B, D, F	S	P, R	ANG,DAL,IRC
RN^55@5970%&	597	1/10	C, N, R	H, J, K, C, E	B, D	S	P, R	ANG,DAL,IRC
RN^55@6040%&	604	1/10	C, N, R	H, J, K, C, E	B, D, F	S	P, R	ANG,DAL,IRC
RN^55@6120%&	612	1/10	C, N, R	H, J, K, C, E	B, D	S	P, R	ANG,DAL,IRC
RN^55@6190%&	619	1/10	C, N, R	H, J, K, C, E	B, D, F	S	P, R	ANG,DAL,IRC
RN^55@6260%&	626	1/10	C, N, R	H, J, K, C, E	B, D	S	P, R	ANG,DAL,IRC
RN^55@6340%&	634	1/10	C, N, R	H, J, K, C, E	B, D, F	S	P, R	ANG,DAL,IRC
RN^55@6420%&	642	1/10	C, N, R	H, J, K, C, E	B, D	S	P, R	ANG,DAL,IRC
RN^55@6490%&	649	1/10	C, N, R	H, J, K, C, E	B, D, F	S	P, R	ANG,DAL,IRC
RN^55@6570%&	657	1/10	C, N, R	H, J, K, C, E	B, D	S	P, R	ANG,DAL,IRC
RN^55@6650%&	665	1/10	C, N, R	H, J, K, C, E	B, D, F	S	P, R	ANG,DAL,IRC
RN^55@6730%&	673	1/10	C, N, R	H, J, K, C, E	B, D	S	P, R	ANG,DAL,IRC
RN^55@6810%&	681	1/10	C, N, R	H, J, K, C, E	B, D, F	S	P, R	ANG,DAL,IRC
RN^55@6900%&	690	1/10	C, N, R	H, J, K, C, E	B, D	S	P, R	ANG,DAL,IRC
RN^55@6980%&	698	1/10	C, N, R	H, J, K, C, E	B, D, F	S	P, R	ANG,DAL,IRC
RN^55@7060%&	706	1/10	C, N, R	H, J, K, C, E	B, D	S	P, R	ANG,DAL,IRC
RN^55@7150%&	715	1/10	C, N, R	H, J, K, C, E	B, D, F	S	P, R	ANG,DAL,IRC
RN^55@7230%&	723	1/10	C, N, R	H, J, K, C, E	B, D	S	P, R	ANG,DAL,IRC
RN^55@7320%&	732	1/10	C, N, R	H, J, K, C, E	B, D, F	S	P, R	ANG,DAL,IRC
RN^55@7410%&	741	1/10	C, N, R	H, J, K, C, E	B, D	S	P, R	ANG,DAL,IRC
RN^55@7500%&	750	1/10	C, N, R	H, J, K, C, E	B, D, F	S	P, R	ANG,DAL,IRC
RN^55@7590%&	759	1/10	C, N, R	H, J, K, C, E	B, D	S	P, R	ANG,DAL,IRC
RN^55@7680%&	768	1/10	C, N, R	H, J, K, C, E	B, D, F	S	P, R	ANG,DAL,IRC
RN^55@7770%&	777	1/10	C, N, R	H, J, K, C, E	B, D	S	P, R	ANG,DAL,IRC
RN^55@7870%&	787	1/10	C, N, R	H, J, K, C, E	B, D, F	S	P, R	ANG,DAL,IRC
RN^55@7960%&	796	1/10	C, N, R	H, J, K, C, E	B, D	S	P, R	ANG,DAL,IRC
RN^55@8060%&	806	1/10	C, N, R	H, J, K, C, E	B, D, F	S	P, R	ANG,DAL,IRC
RN^55@8160%&	816	1/10	C, N, R	H, J, K, C, E	B, D	S	P, R	ANG,DAL,IRC
RN^55@8250%&	825	1/10	C, N, R	H, J, K, C, E	B, D, F	S	P, R	ANG,DAL,IRC
RN^55@8350%&	835	1/10	C, N, R	H, J, K, C, E	B, D	S	P, R	ANG,DAL,IRC
RN^55@8450%&	845	1/10	C, N, R	H, J, K, C, E	B, D, F	S	P, R	ANG,DAL,IRC
RN^55@8560%&	856	1/10	C, N, R	H, J, K, C, E	B, D	S	P, R	ANG,DAL,IRC
RN^55@8660%&	866	1/10	C, N, R	H, J, K, C, E	B, D, F	S	P, R	ANG,DAL,IRC
RN^55@8760%&	876	1/10	C, N, R	H, J, K, C, E	B, D	S	P, R	ANG,DAL,IRC
RN^55@8870%&	887	1/10	C, N, R	H, J, K, C, E	B, D, F	S	P, R	ANG,DAL,IRC
RN^55@8980%&	898	1/10	C, N, R	H, J, K, C, E	B, D	S	P, R	ANG,DAL,IRC
RN^55@9090%&	909	1/10	C, N, R	H, J, K, C, E	B, D, F	S	P, R	ANG,DAL,IRC
RN^55@9200%&	920	1/10	C, N, R	H, J, K, C, E	B, D	S	P, R	ANG,DAL,IRC
RN^55@9310%&	931	1/10	C, N, R	H, J, K, C, E	B, D, F	S	P, R	ANG,DAL,IRC
RN^55@9420%&	942	1/10	C, N, R	H, J, K, C, E	B, D	S	P, R	ANG,DAL,IRC

RN^55@9530%&	953	1/10	C, N, R	H, J, K, C, E	B, D, F	S	P, R	ANG,DAL,IRC
RN^55@9650%&	965	1/10	C, N, R	H, J, K, C, E	B, D	S	P, R	ANG,DAL,IRC
RN^55@9760%&	976	1/10	C, N, R	H, J, K, C, E	B, D, F	S	P, R	ANG,DAL,IRC
RN^55@9880%&	988	1/10	C, N, R	H, J, K, C, E	B, D	S	P, R	ANG,DAL,IRC
RN^55@1001%&	1,000	1/10	C, N, R	H, J, K, C, E	B, D, F	S	P, R	ANG,DAL,IRC
RN^55@1011%&	1,010	1/10	C, N, R	H, J, K, C, E	B, D	S	P, R	ANG,DAL,IRC
RN^55@1021%&	1,020	1/10	C, N, R	H, J, K, C, E	B, D, F	S	P, R	ANG,DAL,IRC
RN^55@1041%&	1,040	1/10	C, N, R	H, J, K, C, E	B, D	S	P, R	ANG,DAL,IRC
RN^55@1051%&	1,050	1/10	C, N, R	H, J, K, C, E	B, D, F	S	P, R	ANG,DAL,IRC
RN^55@1061%&	1,060	1/10	C, N, R	H, J, K, C, E	B, D	S	P, R	ANG,DAL,IRC
RN^55@1071%&	1,070	1/10	C, N, R	H, J, K, C, E	B, D, F	S	P, R	ANG,DAL,IRC
RN^55@1091%&	1,090	1/10	C, N, R	H, J, K, C, E	B, D	S	P, R	ANG,DAL,IRC
RN^55@1101%&	1,100	1/10	C, N, R	H, J, K, C, E	B, D, F	S	P, R	ANG,DAL,IRC
RN^55@1111%&	1,110	1/10	C, N, R	H, J, K, C, E	B, D	S	P, R	ANG,DAL,IRC
RN^55@1131%&	1,130	1/10	C, N, R	H, J, K, C, E	B, D, F	S	P, R	ANG,DAL,IRC
RN^55@1141%&	1,140	1/10	C, N, R	H, J, K, C, E	B, D	S	P, R	ANG,DAL,IRC
RN^55@1151%&	1,150	1/10	C, N, R	H, J, K, C, E	B, D, F	S	P, R	ANG,DAL,IRC
RN^55@1171%&	1,170	1/10	C, N, R	H, J, K, C, E	B, D	S	P, R	ANG,DAL,IRC
RN^55@1181%&	1,180	1/10	C, N, R	H, J, K, C, E	B, D, F	S	P, R	ANG,DAL,IRC
RN^55@1201%&	1,200	1/10	C, N, R	H, J, K, C, E	B, D	S	P, R	ANG,DAL,IRC
RN^55@1211%&	1,210	1/10	C, N, R	H, J, K, C, E	B, D, F	S	P, R	ANG,DAL,IRC
RN^55@1231%&	1,230	1/10	C, N, R	H, J, K, C, E	B, D	S	P, R	ANG,DAL,IRC
RN^55@1241%&	1,240	1/10	C, N, R	H, J, K, C, E	B, D, F	S	P, R	ANG,DAL,IRC
RN^55@1261%&	1,260	1/10	C, N, R	H, J, K, C, E	B, D	S	P, R	ANG,DAL,IRC
RN^55@1271%&	1,270	1/10	C, N, R	H, J, K, C, E	B, D, F	S	P, R	ANG,DAL,IRC
RN^55@1291%&	1,290	1/10	C, N, R	H, J, K, C, E	B, D	S	P, R	ANG,DAL,IRC
RN^55@1301%&	1,300	1/10	C, N, R	H, J, K, C, E	B, D, F	S	P, R	ANG,DAL,IRC
RN^55@1321%&	1,320	1/10	C, N, R	H, J, K, C, E	B, D	S	P, R	ANG,DAL,IRC
RN^55@1331%&	1,330	1/10	C, N, R	H, J, K, C, E	B, D, F	S	P, R	ANG,DAL,IRC
RN^55@1351%&	1,350	1/10	C, N, R	H, J, K, C, E	B, D	S	P, R	ANG,DAL,IRC
RN^55@1371%&	1,370	1/10	C, N, R	H, J, K, C, E	B, D, F	S	P, R	ANG,DAL,IRC
RN^55@1381%&	1,380	1/10	C, N, R	H, J, K, C, E	B, D	S	P, R	ANG,DAL,IRC
RN^55@1401%&	1,400	1/10	C, N, R	H, J, K, C, E	B, D, F	S	P, R	ANG,DAL,IRC
RN^55@1421%&	1,420	1/10	C, N, R	H, J, K, C, E	B, D	S	P, R	ANG,DAL,IRC
RN^55@1431%&	1,430	1/10	C, N, R	H, J, K, C, E	B, D, F	S	P, R	ANG,DAL,IRC
RN^55@1451%&	1,450	1/10	C, N, R	H, J, K, C, E	B, D	S	P, R	ANG,DAL,IRC
RN^55@1471%&	1,470	1/10	C, N, R	H, J, K, C, E	B, D, F	S	P, R	ANG,DAL,IRC
RN^55@1491%&	1,490	1/10	C, N, R	H, J, K, C, E	B, D	S	P, R	ANG,DAL,IRC
RN^55@1501%&	1,500	1/10	C, N, R	H, J, K, C, E	B, D, F	S	P, R	ANG,DAL,IRC
RN^55@1521%&	1,520	1/10	C, N, R	H, J, K, C, E	B, D	S	P, R	ANG,DAL,IRC
RN^55@1541%&	1,540	1/10	C, N, R	H, J, K, C, E	B, D, F	S	P, R	ANG,DAL,IRC
RN^55@1561%&	1,560	1/10	C, N, R	H, J, K, C, E	B, D	S	P, R	ANG,DAL,IRC
RN^55@1581%&	1,580	1/10	C, N, R	H, J, K, C, E	B, D, F	S	P, R	ANG,DAL,IRC
RN^55@1601%&	1,600	1/10	C, N, R	H, J, K, C, E	B, D	S	P, R	ANG,DAL,IRC
RN^55@1621%&	1,620	1/10	C, N, R	H, J, K, C, E	B, D, F	S	P, R	ANG,DAL,IRC
RN^55@1641%&	1,640	1/10	C, N, R	H, J, K, C, E	B, D	S	P, R	ANG,DAL,IRC
RN^55@1651%&	1,650	1/10	C, N, R	H, J, K, C, E	B, D, F	S	P, R	ANG,DAL,IRC

RN^55@1671%&	1,670	1/10	C, N, R	H, J, K, C, E	B, D	S	P, R	ANG,DAL,IRC
RN^55@1691%&	1,690	1/10	C, N, R	H, J, K, C, E	B, D, F	S	P, R	ANG,DAL,IRC
RN^55@1721%&	1,720	1/10	C, N, R	H, J, K, C, E	B, D	S	P, R	ANG,DAL,IRC
RN^55@1741%&	1,740	1/10	C, N, R	H, J, K, C, E	B, D, F	S	P, R	ANG,DAL,IRC
RN^55@1761%&	1,760	1/10	C, N, R	H, J, K, C, E	B, D	S	P, R	ANG,DAL,IRC
RN^55@1781%&	1,780	1/10	C, N, R	H, J, K, C, E	B, D, F	S	P, R	ANG,DAL,IRC
RN^55@1801%&	1,800	1/10	C, N, R	H, J, K, C, E	B, D	S	P, R	ANG,DAL,IRC
RN^55@1821%&	1,820	1/10	C, N, R	H, J, K, C, E	B, D, F	S	P, R	ANG,DAL,IRC
RN^55@1841%&	1,840	1/10	C, N, R	H, J, K, C, E	B, D	S	P, R	ANG,DAL,IRC
RN^55@1871%&	1,870	1/10	C, N, R	H, J, K, C, E	B, D, F	S	P, R	ANG,DAL,IRC
RN^55@1891%&	1,890	1/10	C, N, R	H, J, K, C, E	B, D	S	P, R	ANG,DAL,IRC
RN^55@1911%&	1,910	1/10	C, N, R	H, J, K, C, E	B, D, F	S	P, R	ANG,DAL,IRC
RN^55@1931%&	1,930	1/10	C, N, R	H, J, K, C, E	B, D	S	P, R	ANG,DAL,IRC
RN^55@1961%&	1,960	1/10	C, N, R	H, J, K, C, E	B, D, F	S	P, R	ANG,DAL,IRC
RN^55@1981%&	1,980	1/10	C, N, R	H, J, K, C, E	B, D	S	P, R	ANG,DAL,IRC
RN^55@2001%&	2,000	1/10	C, N, R	H, J, K, C, E	B, D, F	S	P, R	ANG,DAL,IRC
RN^55@2031%&	2,030	1/10	C, N, R	H, J, K, C, E	B, D	S	P, R	ANG,DAL,IRC
RN^55@2051%&	2,050	1/10	C, N, R	H, J, K, C, E	B, D, F	S	P, R	ANG,DAL,IRC
RN^55@2081%&	2,080	1/10	C, N, R	H, J, K, C, E	B, D	S	P, R	ANG,DAL,IRC
RN^55@2101%&	2,100	1/10	C, N, R	H, J, K, C, E	B, D, F	S	P, R	ANG,DAL,IRC
RN^55@2131%&	2,130	1/10	C, N, R	H, J, K, C, E	B, D	S	P, R	ANG,DAL,IRC
RN^55@2151%&	2,150	1/10	C, N, R	H, J, K, C, E	B, D, F	S	P, R	ANG,DAL,IRC
RN^55@2181%&	2,180	1/10	C, N, R	H, J, K, C, E	B, D	S	P, R	ANG,DAL,IRC
RN^55@2211%&	2,210	1/10	C, N, R	H, J, K, C, E	B, D, F	S	P, R	ANG,DAL,IRC
RN^55@2231%&	2,230	1/10	C, N, R	H, J, K, C, E	B, D	S	P, R	ANG,DAL,IRC
RN^55@2261%&	2,260	1/10	C, N, R	H, J, K, C, E	B, D, F	S	P, R	ANG,DAL,IRC
RN^55@2291%&	2,290	1/10	C, N, R	H, J, K, C, E	B, D	S	P, R	ANG,DAL,IRC
RN^55@2321%&	2,320	1/10	C, N, R	H, J, K, C, E	B, D, F	S	P, R	ANG,DAL,IRC
RN^55@2341%&	2,340	1/10	C, N, R	H, J, K, C, E	B, D	S	P, R	ANG,DAL,IRC
RN^55@2371%&	2,370	1/10	C, N, R	H, J, K, C, E	B, D, F	S	P, R	ANG,DAL,IRC
RN^55@2401%&	2,400	1/10	C, N, R	H, J, K, C, E	B, D	S	P, R	ANG,DAL,IRC
RN^55@2431%&	2,430	1/10	C, N, R	H, J, K, C, E	B, D, F	S	P, R	ANG,DAL,IRC
RN^55@2461%&	2,460	1/10	C, N, R	H, J, K, C, E	B, D	S	P, R	ANG,DAL,IRC
RN^55@2491%&	2,490	1/10	C, N, R	H, J, K, C, E	B, D, F	S	P, R	ANG,DAL,IRC
RN^55@2521%&	2,520	1/10	C, N, R	H, J, K, C, E	B, D	S	P, R	ANG,DAL,IRC
RN^55@2551%&	2,550	1/10	C, N, R	H, J, K, C, E	B, D, F	S	P, R	ANG,DAL,IRC
RN^55@2581%&	2,580	1/10	C, N, R	H, J, K, C, E	B, D	S	P, R	ANG,DAL,IRC
RN^55@2611%&	2,610	1/10	C, N, R	H, J, K, C, E	B, D, F	S	P, R	ANG,DAL,IRC
RN^55@2641%&	2,640	1/10	C, N, R	H, J, K, C, E	B, D	S	P, R	ANG,DAL,IRC
RN^55@2671%&	2,670	1/10	C, N, R	H, J, K, C, E	B, D, F	S	P, R	ANG,DAL,IRC
RN^55@2711%&	2,710	1/10	C, N, R	H, J, K, C, E	B, D	S	P, R	ANG,DAL,IRC
RN^55@2741%&	2,740	1/10	C, N, R	H, J, K, C, E	B, D, F	S	P, R	ANG,DAL,IRC
RN^55@2771%&	2,770	1/10	C, N, R	H, J, K, C, E	B, D	S	P, R	ANG,DAL,IRC
RN^55@2801%&	2,800	1/10	C, N, R	H, J, K, C, E	B, D, F	S	P, R	ANG,DAL,IRC
RN^55@2841%&	2,840	1/10	C, N, R	H, J, K, C, E	B, D	S	P, R	ANG,DAL,IRC
RN^55@2871%&	2,870	1/10	C, N, R	H, J, K, C, E	B, D, F	S	P, R	ANG,DAL,IRC
RN^55@2911%&	2,910	1/10	C, N, R	H, J, K, C, E	B, D	S	P, R	ANG,DAL,IRC

RN^55@2941%&	2,940	1/10	C, N, R	H, J, K, C, E	B, D, F	S	P, R	ANG,DAL,IRC
RN^55@2981%&	2,980	1/10	C, N, R	H, J, K, C, E	B, D	S	P, R	ANG,DAL,IRC
RN^55@3011%&	3,010	1/10	C, N, R	H, J, K, C, E	B, D, F	S	P, R	ANG,DAL,IRC
RN^55@3051%&	3,050	1/10	C, N, R	H, J, K, C, E	B, D	S	P, R	ANG,DAL,IRC
RN^55@3091%&	3,090	1/10	C, N, R	H, J, K, C, E	B, D, F	S	P, R	ANG,DAL,IRC
RN^55@3121%&	3,120	1/10	C, N, R	H, J, K, C, E	B, D	S	P, R	ANG,DAL,IRC
RN^55@3161%&	3,160	1/10	C, N, R	H, J, K, C, E	B, D, F	S	P, R	ANG,DAL,IRC
RN^55@3201%&	3,200	1/10	C, N, R	H, J, K, C, E	B, D	S	P, R	ANG,DAL,IRC
RN^55@3241%&	3,240	1/10	C, N, R	H, J, K, C, E	B, D, F	S	P, R	ANG,DAL,IRC
RN^55@3281%&	3,280	1/10	C, N, R	H, J, K, C, E	B, D	S	P, R	ANG,DAL,IRC
RN^55@3321%&	3,320	1/10	C, N, R	H, J, K, C, E	B, D, F	S	P, R	ANG,DAL,IRC
RN^55@3361%&	3,360	1/10	C, N, R	H, J, K, C, E	B, D	S	P, R	ANG,DAL,IRC
RN^55@3401%&	3,400	1/10	C, N, R	H, J, K, C, E	B, D, F	S	P, R	ANG,DAL,IRC
RN^55@3441%&	3,440	1/10	C, N, R	H, J, K, C, E	B, D	S	P, R	ANG,DAL,IRC
RN^55@3481%&	3,480	1/10	C, N, R	H, J, K, C, E	B, D, F	S	P, R	ANG,DAL,IRC
RN^55@3521%&	3,520	1/10	C, N, R	H, J, K, C, E	B, D	S	P, R	ANG,DAL,IRC
RN^55@3571%&	3,570	1/10	C, N, R	H, J, K, C, E	B, D, F	S	P, R	ANG,DAL,IRC
RN^55@3611%&	3,610	1/10	C, N, R	H, J, K, C, E	B, D	S	P, R	ANG,DAL,IRC
RN^55@3651%&	3,650	1/10	C, N, R	H, J, K, C, E	B, D, F	S	P, R	ANG,DAL,IRC
RN^55@3701%&	3,700	1/10	C, N, R	H, J, K, C, E	B, D	S	P, R	ANG,DAL,IRC
RN^55@3741%&	3,740	1/10	C, N, R	H, J, K, C, E	B, D, F	S	P, R	ANG,DAL,IRC
RN^55@3791%&	3,790	1/10	C, N, R	H, J, K, C, E	B, D	S	P, R	ANG,DAL,IRC
RN^55@3831%&	3,830	1/10	C, N, R	H, J, K, C, E	B, D, F	S	P, R	ANG,DAL,IRC
RN^55@3881%&	3,880	1/10	C, N, R	H, J, K, C, E	B, D	S	P, R	ANG,DAL,IRC
RN^55@3921%&	3,920	1/10	C, N, R	H, J, K, C, E	B, D, F	S	P, R	ANG,DAL,IRC
RN^55@3971%&	3,970	1/10	C, N, R	H, J, K, C, E	B, D	S	P, R	ANG,DAL,IRC
RN^55@4021%&	4,020	1/10	C, N, R	H, J, K, C, E	B, D, F	S	P, R	ANG,DAL,IRC
RN^55@4071%&	4,070	1/10	C, N, R	H, J, K, C, E	B, D	S	P, R	ANG,DAL,IRC
RN^55@4121%&	4,120	1/10	C, N, R	H, J, K, C, E	B, D, F	S	P, R	ANG,DAL,IRC
RN^55@4171%&	4,170	1/10	C, N, R	H, J, K, C, E	B, D	S	P, R	ANG,DAL,IRC
RN^55@4221%&	4,220	1/10	C, N, R	H, J, K, C, E	B, D, F	S	P, R	ANG,DAL,IRC
RN^55@4271%&	4,270	1/10	C, N, R	H, J, K, C, E	B, D	S	P, R	ANG,DAL,IRC
RN^55@4321%&	4,320	1/10	C, N, R	H, J, K, C, E	B, D, F	S	P, R	ANG,DAL,IRC
RN^55@4371%&	4,370	1/10	C, N, R	H, J, K, C, E	B, D	S	P, R	ANG,DAL,IRC
RN^55@4421%&	4,420	1/10	C, N, R	H, J, K, C, E	B, D, F	S	P, R	ANG,DAL,IRC
RN^55@4481%&	4,480	1/10	C, N, R	H, J, K, C, E	B, D	S	P, R	ANG,DAL,IRC
RN^55@4531%&	4,530	1/10	C, N, R	H, J, K, C, E	B, D, F	S	P, R	ANG,DAL,IRC
RN^55@4591%&	4,590	1/10	C, N, R	H, J, K, C, E	B, D	S	P, R	ANG,DAL,IRC
RN^55@4641%&	4,640	1/10	C, N, R	H, J, K, C, E	B, D, F	S	P, R	ANG,DAL,IRC
RN^55@4701%&	4,700	1/10	C, N, R	H, J, K, C, E	B, D	S	P, R	ANG,DAL,IRC
RN^55@4751%&	4,750	1/10	C, N, R	H, J, K, C, E	B, D, F	S	P, R	ANG,DAL,IRC
RN^55@4811%&	4,810	1/10	C, N, R	H, J, K, C, E	B, D	S	P, R	ANG,DAL,IRC
RN^55@4871%&	4,870	1/10	C, N, R	H, J, K, C, E	B, D, F	S	P, R	ANG,DAL,IRC
RN^55@4931%&	4,930	1/10	C, N, R	H, J, K, C, E	B, D	S	P, R	ANG,DAL,IRC
RN^55@4991%&	4,990	1/10	C, N, R	H, J, K, C, E	B, D, F	S	P, R	ANG,DAL,IRC
RN^55@5051%&	5,050	1/10	C, N, R	H, J, K, C, E	B, D	S	P, R	ANG,DAL,IRC
RN^55@5111%&	5,110	1/10	C, N, R	H, J, K, C, E	B, D, F	S	P, R	ANG,DAL,IRC

RN^55@5171%&	5,170	1/10	C, N, R	H, J, K, C, E	B, D	S	P, R	ANG,DAL,IRC
RN^55@5231%&	5,230	1/10	C, N, R	H, J, K, C, E	B, D, F	S	P, R	ANG,DAL,IRC
RN^55@5301%&	5,300	1/10	C, N, R	H, J, K, C, E	B, D	S	P, R	ANG,DAL,IRC
RN^55@5361%&	5,360	1/10	C, N, R	H, J, K, C, E	B, D, F	S	P, R	ANG,DAL,IRC
RN^55@5421%&	5,420	1/10	C, N, R	H, J, K, C, E	B, D	S	P, R	ANG,DAL,IRC
RN^55@5491%&	5,490	1/10	C, N, R	H, J, K, C, E	B, D, F	S	P, R	ANG,DAL,IRC
RN^55@5561%&	5,560	1/10	C, N, R	H, J, K, C, E	B, D	S	P, R	ANG,DAL,IRC
RN^55@5621%&	5,620	1/10	C, N, R	H, J, K, C, E	B, D, F	S	P, R	ANG,DAL,IRC
RN^55@5691%&	5,690	1/10	C, N, R	H, J, K, C, E	B, D	S	P, R	ANG,DAL,IRC
RN^55@5761%&	5,760	1/10	C, N, R	H, J, K, C, E	B, D, F	S	P, R	ANG,DAL,IRC
RN^55@5831%&	5,830	1/10	C, N, R	H, J, K, C, E	B, D	S	P, R	ANG,DAL,IRC
RN^55@5901%&	5,900	1/10	C, N, R	H, J, K, C, E	B, D, F	S	P, R	ANG,DAL,IRC
RN^55@5971%&	5,970	1/10	C, N, R	H, J, K, C, E	B, D	S	P, R	ANG,DAL,IRC
RN^55@6041%&	6,040	1/10	C, N, R	H, J, K, C, E	B, D, F	S	P, R	ANG,DAL,IRC
RN^55@6121%&	6,120	1/10	C, N, R	H, J, K, C, E	B, D	S	P, R	ANG,DAL,IRC
RN^55@6191%&	6,190	1/10	C, N, R	H, J, K, C, E	B, D, F	S	P, R	ANG,DAL,IRC
RN^55@6261%&	6,260	1/10	C, N, R	H, J, K, C, E	B, D	S	P, R	ANG,DAL,IRC
RN^55@6341%&	6,340	1/10	C, N, R	H, J, K, C, E	B, D, F	S	P, R	ANG,DAL,IRC
RN^55@6421%&	6,420	1/10	C, N, R	H, J, K, C, E	B, D	S	P, R	ANG,DAL,IRC
RN^55@6491%&	6,490	1/10	C, N, R	H, J, K, C, E	B, D, F	S	P, R	ANG,DAL,IRC
RN^55@6571%&	6,570	1/10	C, N, R	H, J, K, C, E	B, D	S	P, R	ANG,DAL,IRC
RN^55@6651%&	6,650	1/10	C, N, R	H, J, K, C, E	B, D, F	S	P, R	ANG,DAL,IRC
RN^55@6731%&	6,730	1/10	C, N, R	H, J, K, C, E	B, D	S	P, R	ANG,DAL,IRC
RN^55@6811%&	6,810	1/10	C, N, R	H, J, K, C, E	B, D, F	S	P, R	ANG,DAL,IRC
RN^55@6901%&	6,900	1/10	C, N, R	H, J, K, C, E	B, D	S	P, R	ANG,DAL,IRC
RN^55@6981%&	6,980	1/10	C, N, R	H, J, K, C, E	B, D, F	S	P, R	ANG,DAL,IRC
RN^55@7061%&	7,060	1/10	C, N, R	H, J, K, C, E	B, D	S	P, R	ANG,DAL,IRC
RN^55@7151%&	7,150	1/10	C, N, R	H, J, K, C, E	B, D, F	S	P, R	ANG,DAL,IRC
RN^55@7231%&	7,230	1/10	C, N, R	H, J, K, C, E	B, D	S	P, R	ANG,DAL,IRC
RN^55@7321%&	7,320	1/10	C, N, R	H, J, K, C, E	B, D, F	S	P, R	ANG,DAL,IRC
RN^55@7411%&	7,410	1/10	C, N, R	H, J, K, C, E	B, D	S	P, R	ANG,DAL,IRC
RN^55@7501%&	7,500	1/10	C, N, R	H, J, K, C, E	B, D, F	S	P, R	ANG,DAL,IRC
RN^55@7591%&	7,590	1/10	C, N, R	H, J, K, C, E	B, D	S	P, R	ANG,DAL,IRC
RN^55@7681%&	7,680	1/10	C, N, R	H, J, K, C, E	B, D, F	S	P, R	ANG,DAL,IRC
RN^55@7771%&	7,770	1/10	C, N, R	H, J, K, C, E	B, D	S	P, R	ANG,DAL,IRC
RN^55@7871%&	7,870	1/10	C, N, R	H, J, K, C, E	B, D, F	S	P, R	ANG,DAL,IRC
RN^55@7961%&	7,960	1/10	C, N, R	H, J, K, C, E	B, D	S	P, R	ANG,DAL,IRC
RN^55@8061%&	8,060	1/10	C, N, R	H, J, K, C, E	B, D, F	S	P, R	ANG,DAL,IRC
RN^55@8161%&	8,160	1/10	C, N, R	H, J, K, C, E	B, D	S	P, R	ANG,DAL,IRC
RN^55@8251%&	8,250	1/10	C, N, R	H, J, K, C, E	B, D, F	S	P, R	ANG,DAL,IRC
RN^55@8351%&	8,350	1/10	C, N, R	H, J, K, C, E	B, D	S	P, R	ANG,DAL,IRC
RN^55@8451%&	8,450	1/10	C, N, R	H, J, K, C, E	B, D, F	S	P, R	ANG,DAL,IRC
RN^55@8561%&	8,560	1/10	C, N, R	H, J, K, C, E	B, D	S	P, R	ANG,DAL,IRC
RN^55@8661%&	8,660	1/10	C, N, R	H, J, K, C, E	B, D, F	S	P, R	ANG,DAL,IRC
RN^55@8761%&	8,760	1/10	C, N, R	H, J, K, C, E	B, D	S	P, R	ANG,DAL,IRC
RN^55@8871%&	8,870	1/10	C, N, R	H, J, K, C, E	B, D, F	S	P, R	ANG,DAL,IRC
RN^55@8981%&	8,980	1/10	C, N, R	H, J, K, C, E	B, D	S	P, R	ANG,DAL,IRC

RN^55@9091%&	9,090	1/10	C, N, R	H, J, K, C, E	B, D, F	S	P, R	ANG,DAL,IRC
RN^55@9201%&	9,200	1/10	C, N, R	H, J, K, C, E	B, D	S	P, R	ANG,DAL,IRC
RN^55@9311%&	9,310	1/10	C, N, R	H, J, K, C, E	B, D, F	S	P, R	ANG,DAL,IRC
RN^55@9421%&	9,420	1/10	C, N, R	H, J, K, C, E	B, D	S	P, R	ANG,DAL,IRC
RN^55@9531%&	9,530	1/10	C, N, R	H, J, K, C, E	B, D, F	S	P, R	ANG,DAL,IRC
RN^55@9651%&	9,650	1/10	C, N, R	H, J, K, C, E	B, D	S	P, R	ANG,DAL,IRC
RN^55@9761%&	9,760	1/10	C, N, R	H, J, K, C, E	B, D, F	S	P, R	ANG,DAL,IRC
RN^55@9881%&	9,880	1/10	C, N, R	H, J, K, C, E	B, D	S	P, R	ANG,DAL,IRC
RN^55@1002%&	10,000	1/10	C, N, R	H, J, K, C, E	B, D, F	S	P, R	ANG,DAL,IRC
RN^55@1012%&	10,100	1/10	C, N, R	H, J, K, C, E	B, D	S	P, R	ANG,DAL,IRC
RN^55@1022%&	10,200	1/10	C, N, R	H, J, K, C, E	B, D, F	S	P, R	ANG,DAL,IRC
RN^55@1042%&	10,400	1/10	C, N, R	H, J, K, C, E	B, D	S	P, R	ANG,DAL,IRC
RN^55@1052%&	10,500	1/10	C, N, R	H, J, K, C, E	B, D, F	S	P, R	ANG,DAL,IRC
RN^55@1062%&	10,600	1/10	C, N, R	H, J, K, C, E	B, D	S	P, R	ANG,DAL,IRC
RN^55@1072%&	10,700	1/10	C, N, R	H, J, K, C, E	B, D, F	S	P, R	ANG,DAL,IRC
RN^55@1092%&	10,900	1/10	C, N, R	H, J, K, C, E	B, D	S	P, R	ANG,DAL,IRC
RN^55@1102%&	11,000	1/10	C, N, R	H, J, K, C, E	B, D, F	S	P, R	ANG,DAL,IRC
RN^55@1112%&	11,100	1/10	C, N, R	H, J, K, C, E	B, D	S	P, R	ANG,DAL,IRC
RN^55@1132%&	11,300	1/10	C, N, R	H, J, K, C, E	B, D, F	S	P, R	ANG,DAL,IRC
RN^55@1142%&	11,400	1/10	C, N, R	H, J, K, C, E	B, D	S	P, R	ANG,DAL,IRC
RN^55@1152%&	11,500	1/10	C, N, R	H, J, K, C, E	B, D, F	S	P, R	ANG,DAL,IRC
RN^55@1172%&	11,700	1/10	C, N, R	H, J, K, C, E	B, D	S	P, R	ANG,DAL,IRC
RN^55@1182%&	11,800	1/10	C, N, R	H, J, K, C, E	B, D, F	S	P, R	ANG,DAL,IRC
RN^55@1202%&	12,000	1/10	C, N, R	H, J, K, C, E	B, D	S	P, R	ANG,DAL,IRC
RN^55@1212%&	12,100	1/10	C, N, R	H, J, K, C, E	B, D, F	S	P, R	ANG,DAL,IRC
RN^55@1232%&	12,300	1/10	C, N, R	H, J, K, C, E	B, D	S	P, R	ANG,DAL,IRC
RN^55@1242%&	12,400	1/10	C, N, R	H, J, K, C, E	B, D, F	S	P, R	ANG,DAL,IRC
RN^55@1262%&	12,600	1/10	C, N, R	H, J, K, C, E	B, D	S	P, R	ANG,DAL,IRC
RN^55@1272%&	12,700	1/10	C, N, R	H, J, K, C, E	B, D, F	S	P, R	ANG,DAL,IRC
RN^55@1292%&	12,900	1/10	C, N, R	H, J, K, C, E	B, D	S	P, R	ANG,DAL,IRC
RN^55@1302%&	13,000	1/10	C, N, R	H, J, K, C, E	B, D, F	S	P, R	ANG,DAL,IRC
RN^55@1322%&	13,200	1/10	C, N, R	H, J, K, C, E	B, D	S	P, R	ANG,DAL,IRC
RN^55@1332%&	13,300	1/10	C, N, R	H, J, K, C, E	B, D, F	S	P, R	ANG,DAL,IRC
RN^55@1352%&	13,500	1/10	C, N, R	H, J, K, C, E	B, D	S	P, R	ANG,DAL,IRC
RN^55@1372%&	13,700	1/10	C, N, R	H, J, K, C, E	B, D, F	S	P, R	ANG,DAL,IRC
RN^55@1382%&	13,800	1/10	C, N, R	H, J, K, C, E	B, D	S	P, R	ANG,DAL,IRC
RN^55@1402%&	14,000	1/10	C, N, R	H, J, K, C, E	B, D, F	S	P, R	ANG,DAL,IRC
RN^55@1422%&	14,200	1/10	C, N, R	H, J, K, C, E	B, D	S	P, R	ANG,DAL,IRC
RN^55@1432%&	14,300	1/10	C, N, R	H, J, K, C, E	B, D, F	S	P, R	ANG,DAL,IRC
RN^55@1452%&	14,500	1/10	C, N, R	H, J, K, C, E	B, D	S	P, R	ANG,DAL,IRC
RN^55@1472%&	14,700	1/10	C, N, R	H, J, K, C, E	B, D, F	S	P, R	ANG,DAL,IRC
RN^55@1492%&	14,900	1/10	C, N, R	H, J, K, C, E	B, D	S	P, R	ANG,DAL,IRC
RN^55@1502%&	15,000	1/10	C, N, R	H, J, K, C, E	B, D, F	S	P, R	ANG,DAL,IRC
RN^55@1522%&	15,200	1/10	C, N, R	H, J, K, C, E	B, D	S	P, R	ANG,DAL,IRC
RN^55@1542%&	15,400	1/10	C, N, R	H, J, K, C, E	B, D, F	S	P, R	ANG,DAL,IRC
RN^55@1562%&	15,600	1/10	C, N, R	H, J, K, C, E	B, D	S	P, R	ANG,DAL,IRC
RN^55@1582%&	15,800	1/10	C, N, R	H, J, K, C, E	B, D, F	S	P, R	ANG,DAL,IRC

RN^55@1602%&	16,000	1/10	C, N, R	H, J, K, C, E	B, D	S	P, R	ANG,DAL,IRC
RN^55@1622%&	16,200	1/10	C, N, R	H, J, K, C, E	B, D, F	S	P, R	ANG,DAL,IRC
RN^55@1642%&	16,400	1/10	C, N, R	H, J, K, C, E	B, D	S	P, R	ANG,DAL,IRC
RN^55@1652%&	16,500	1/10	C, N, R	H, J, K, C, E	B, D, F	S	P, R	ANG,DAL,IRC
RN^55@1672%&	16,700	1/10	C, N, R	H, J, K, C, E	B, D	S	P, R	ANG,DAL,IRC
RN^55@1692%&	16,900	1/10	C, N, R	H, J, K, C, E	B, D, F	S	P, R	ANG,DAL,IRC
RN^55@1722%&	17,200	1/10	C, N, R	H, J, K, C, E	B, D	S	P, R	ANG,DAL,IRC
RN^55@1742%&	17,400	1/10	C, N, R	H, J, K, C, E	B, D, F	S	P, R	ANG,DAL,IRC
RN^55@1762%&	17,600	1/10	C, N, R	H, J, K, C, E	B, D	S	P, R	ANG,DAL,IRC
RN^55@1782%&	17,800	1/10	C, N, R	H, J, K, C, E	B, D, F	S	P, R	ANG,DAL,IRC
RN^55@1802%&	18,000	1/10	C, N, R	H, J, K, C, E	B, D	S	P, R	ANG,DAL,IRC
RN^55@1822%&	18,200	1/10	C, N, R	H, J, K, C, E	B, D, F	S	P, R	ANG,DAL,IRC
RN^55@1842%&	18,400	1/10	C, N, R	H, J, K, C, E	B, D	S	P, R	ANG,DAL,IRC
RN^55@1872%&	18,700	1/10	C, N, R	H, J, K, C, E	B, D, F	S	P, R	ANG,DAL,IRC
RN^55@1892%&	18,900	1/10	C, N, R	H, J, K, C, E	B, D	S	P, R	ANG,DAL,IRC
RN^55@1912%&	19,100	1/10	C, N, R	H, J, K, C, E	B, D, F	S	P, R	ANG,DAL,IRC
RN^55@1932%&	19,300	1/10	C, N, R	H, J, K, C, E	B, D	S	P, R	ANG,DAL,IRC
RN^55@1962%&	19,600	1/10	C, N, R	H, J, K, C, E	B, D, F	S	P, R	ANG,DAL,IRC
RN^55@1982%&	19,800	1/10	C, N, R	H, J, K, C, E	B, D	S	P, R	ANG,DAL,IRC
RN^55@2002%&	20,000	1/10	C, N, R	H, J, K, C, E	B, D, F	S	P, R	ANG,DAL,IRC
RN^55@2032%&	20,300	1/10	C, N, R	H, J, K, C, E	B, D	S	P, R	ANG,DAL,IRC
RN^55@2052%&	20,500	1/10	C, N, R	H, J, K, C, E	B, D, F	S	P, R	ANG,DAL,IRC
RN^55@2082%&	20,800	1/10	C, N, R	H, J, K, C, E	B, D	S	P, R	ANG,DAL,IRC
RN^55@2102%&	21,000	1/10	C, N, R	H, J, K, C, E	B, D, F	S	P, R	ANG,DAL,IRC
RN^55@2132%&	21,300	1/10	C, N, R	H, J, K, C, E	B, D	S	P, R	ANG,DAL,IRC
RN^55@2152%&	21,500	1/10	C, N, R	H, J, K, C, E	B, D, F	S	P, R	ANG,DAL,IRC
RN^55@2182%&	21,800	1/10	C, N, R	H, J, K, C, E	B, D	S	P, R	ANG,DAL,IRC
RN^55@2212%&	22,100	1/10	C, N, R	H, J, K, C, E	B, D, F	S	P, R	ANG,DAL,IRC
RN^55@2232%&	22,300	1/10	C, N, R	H, J, K, C, E	B, D	S	P, R	ANG,DAL,IRC
RN^55@2262%&	22,600	1/10	C, N, R	H, J, K, C, E	B, D, F	S	P, R	ANG,DAL,IRC
RN^55@2292%&	22,900	1/10	C, N, R	H, J, K, C, E	B, D	S	P, R	ANG,DAL,IRC
RN^55@2322%&	23,200	1/10	C, N, R	H, J, K, C, E	B, D, F	S	P, R	ANG,DAL,IRC
RN^55@2342%&	23,400	1/10	C, N, R	H, J, K, C, E	B, D	S	P, R	ANG,DAL,IRC
RN^55@2372%&	23,700	1/10	C, N, R	H, J, K, C, E	B, D, F	S	P, R	ANG,DAL,IRC
RN^55@2402%&	24,000	1/10	C, N, R	H, J, K, C, E	B, D	S	P, R	ANG,DAL,IRC
RN^55@2432%&	24,300	1/10	C, N, R	H, J, K, C, E	B, D, F	S	P, R	ANG,DAL,IRC
RN^55@2462%&	24,600	1/10	C, N, R	H, J, K, C, E	B, D	S	P, R	ANG,DAL,IRC
RN^55@2492%&	24,900	1/10	C, N, R	H, J, K, C, E	B, D, F	S	P, R	ANG,DAL,IRC
RN^55@2522%&	25,200	1/10	C, N, R	H, J, K, C, E	B, D	S	P, R	ANG,DAL,IRC
RN^55@2552%&	25,500	1/10	C, N, R	H, J, K, C, E	B, D, F	S	P, R	ANG,DAL,IRC
RN^55@2582%&	25,800	1/10	C, N, R	H, J, K, C, E	B, D	S	P, R	ANG,DAL,IRC
RN^55@2612%&	26,100	1/10	C, N, R	H, J, K, C, E	B, D, F	S	P, R	ANG,DAL,IRC
RN^55@2642%&	26,400	1/10	C, N, R	H, J, K, C, E	B, D	S	P, R	ANG,DAL,IRC
RN^55@2672%&	26,700	1/10	C, N, R	H, J, K, C, E	B, D, F	S	P, R	ANG,DAL,IRC
RN^55@2712%&	27,100	1/10	C, N, R	H, J, K, C, E	B, D	S	P, R	ANG,DAL,IRC
RN^55@2742%&	27,400	1/10	C, N, R	H, J, K, C, E	B, D, F	S	P, R	ANG,DAL,IRC
RN^55@2772%&	27,700	1/10	C, N, R	H, J, K, C, E	B, D	S	P, R	ANG,DAL,IRC

RN^55@2802%&	28,000	1/10	C, N, R	H, J, K, C, E	B, D, F	S	P, R	ANG,DAL,IRC
RN^55@2842%&	28,400	1/10	C, N, R	H, J, K, C, E	B, D	S	P, R	ANG,DAL,IRC
RN^55@2872%&	28,700	1/10	C, N, R	H, J, K, C, E	B, D, F	S	P, R	ANG,DAL,IRC
RN^55@2912%&	29,100	1/10	C, N, R	H, J, K, C, E	B, D	S	P, R	ANG,DAL,IRC
RN^55@2942%&	29,400	1/10	C, N, R	H, J, K, C, E	B, D, F	S	P, R	ANG,DAL,IRC
RN^55@2982%&	29,800	1/10	C, N, R	H, J, K, C, E	B, D	S	P, R	ANG,DAL,IRC
RN^55@3012%&	30,100	1/10	C, N, R	H, J, K, C, E	B, D, F	S	P, R	ANG,DAL,IRC
RN^55@3052%&	30,500	1/10	C, N, R	H, J, K, C, E	B, D	S	P, R	ANG,DAL,IRC
RN^55@3092%&	30,900	1/10	C, N, R	H, J, K, C, E	B, D, F	S	P, R	ANG,DAL,IRC
RN^55@3122%&	31,200	1/10	C, N, R	H, J, K, C, E	B, D	S	P, R	ANG,DAL,IRC
RN^55@3162%&	31,600	1/10	C, N, R	H, J, K, C, E	B, D, F	S	P, R	ANG,DAL,IRC
RN^55@3202%&	32,000	1/10	C, N, R	H, J, K, C, E	B, D	S	P, R	ANG,DAL,IRC
RN^55@3242%&	32,400	1/10	C, N, R	H, J, K, C, E	B, D, F	S	P, R	ANG,DAL,IRC
RN^55@3282%&	32,800	1/10	C, N, R	H, J, K, C, E	B, D	S	P, R	ANG,DAL,IRC
RN^55@3322%&	33,200	1/10	C, N, R	H, J, K, C, E	B, D, F	S	P, R	ANG,DAL,IRC
RN^55@3362%&	33,600	1/10	C, N, R	H, J, K, C, E	B, D	S	P, R	ANG,DAL,IRC
RN^55@3402%&	34,000	1/10	C, N, R	H, J, K, C, E	B, D, F	S	P, R	ANG,DAL,IRC
RN^55@3442%&	34,400	1/10	C, N, R	H, J, K, C, E	B, D	S	P, R	ANG,DAL,IRC
RN^55@3482%&	34,800	1/10	C, N, R	H, J, K, C, E	B, D, F	S	P, R	ANG,DAL,IRC
RN^55@3522%&	35,200	1/10	C, N, R	H, J, K, C, E	B, D	S	P, R	ANG,DAL,IRC
RN^55@3572%&	35,700	1/10	C, N, R	H, J, K, C, E	B, D, F	S	P, R	ANG,DAL,IRC
RN^55@3612%&	36,100	1/10	C, N, R	H, J, K, C, E	B, D	S	P, R	ANG,DAL,IRC
RN^55@3652%&	36,500	1/10	C, N, R	H, J, K, C, E	B, D, F	S	P, R	ANG,DAL,IRC
RN^55@3702%&	37,000	1/10	C, N, R	H, J, K, C, E	B, D	S	P, R	ANG,DAL,IRC
RN^55@3742%&	37,400	1/10	C, N, R	H, J, K, C, E	B, D, F	S	P, R	ANG,DAL,IRC
RN^55@3792%&	37,900	1/10	C, N, R	H, J, K, C, E	B, D	S	P, R	ANG,DAL,IRC
RN^55@3832%&	38,300	1/10	C, N, R	H, J, K, C, E	B, D, F	S	P, R	ANG,DAL,IRC
RN^55@3882%&	38,800	1/10	C, N, R	H, J, K, C, E	B, D	S	P, R	ANG,DAL,IRC
RN^55@3922%&	39,200	1/10	C, N, R	H, J, K, C, E	B, D, F	S	P, R	ANG,DAL,IRC
RN^55@3972%&	39,700	1/10	C, N, R	H, J, K, C, E	B, D	S	P, R	ANG,DAL,IRC
RN^55@4022%&	40,200	1/10	C, N, R	H, J, K, C, E	B, D, F	S	P, R	ANG,DAL,IRC
RN^55@4072%&	40,700	1/10	C, N, R	H, J, K, C, E	B, D	S	P, R	ANG,DAL,IRC
RN^55@4122%&	41,200	1/10	C, N, R	H, J, K, C, E	B, D, F	S	P, R	ANG,DAL,IRC
RN^55@4172%&	41,700	1/10	C, N, R	H, J, K, C, E	B, D	S	P, R	ANG,DAL,IRC
RN^55@4222%&	42,200	1/10	C, N, R	H, J, K, C, E	B, D, F	S	P, R	ANG,DAL,IRC
RN^55@4272%&	42,700	1/10	C, N, R	H, J, K, C, E	B, D	S	P, R	ANG,DAL,IRC
RN^55@4322%&	43,200	1/10	C, N, R	H, J, K, C, E	B, D, F	S	P, R	ANG,DAL,IRC
RN^55@4372%&	43,700	1/10	C, N, R	H, J, K, C, E	B, D	S	P, R	ANG,DAL,IRC
RN^55@4422%&	44,200	1/10	C, N, R	H, J, K, C, E	B, D, F	S	P, R	ANG,DAL,IRC
RN^55@4482%&	44,800	1/10	C, N, R	H, J, K, C, E	B, D	S	P, R	ANG,DAL,IRC
RN^55@4532%&	45,300	1/10	C, N, R	H, J, K, C, E	B, D, F	S	P, R	ANG,DAL,IRC
RN^55@4592%&	45,900	1/10	C, N, R	H, J, K, C, E	B, D	S	P, R	ANG,DAL,IRC
RN^55@4642%&	46,400	1/10	C, N, R	H, J, K, C, E	B, D, F	S	P, R	ANG,DAL,IRC
RN^55@4702%&	47,000	1/10	C, N, R	H, J, K, C, E	B, D	S	P, R	ANG,DAL,IRC
RN^55@4752%&	47,500	1/10	C, N, R	H, J, K, C, E	B, D, F	S	P, R	ANG,DAL,IRC
RN^55@4812%&	48,100	1/10	C, N, R	H, J, K, C, E	B, D	S	P, R	ANG,DAL,IRC
RN^55@4872%&	48,700	1/10	C, N, R	H, J, K, C, E	B, D, F	S	P, R	ANG,DAL,IRC

RN^55@4932%&	49,300	1/10	C, N, R	H, J, K, C, E	B, D	S	P, R	ANG,DAL,IRC
RN^55@4992%&	49,900	1/10	C, N, R	H, J, K, C, E	B, D, F	S	P, R	ANG,DAL,IRC
RN^55@5052%&	50,500	1/10	C, N, R	H, J, K, C, E	B, D	S	P, R	ANG,DAL,IRC
RN^55@5112%&	51,100	1/10	C, N, R	H, J, K, C, E	B, D, F	S	P, R	ANG,DAL,IRC
RN^55@5172%&	51,700	1/10	C, N, R	H, J, K, C, E	B, D	S	P, R	ANG,DAL,IRC
RN^55@5232%&	52,300	1/10	C, N, R	H, J, K, C, E	B, D, F	S	P, R	ANG,DAL,IRC
RN^55@5302%&	53,000	1/10	C, N, R	H, J, K, C, E	B, D	S	P, R	ANG,DAL,IRC
RN^55@5362%&	53,600	1/10	C, N, R	H, J, K, C, E	B, D, F	S	P, R	ANG,DAL,IRC
RN^55@5422%&	54,200	1/10	C, N, R	H, J, K, C, E	B, D	S	P, R	ANG,DAL,IRC
RN^55@5492%&	54,900	1/10	C, N, R	H, J, K, C, E	B, D, F	S	P, R	ANG,DAL,IRC
RN^55@5562%&	55,600	1/10	C, N, R	H, J, K, C, E	B, D	S	P, R	ANG,DAL,IRC
RN^55@5622%&	56,200	1/10	C, N, R	H, J, K, C, E	B, D, F	S	P, R	ANG,DAL,IRC
RN^55@5692%&	56,900	1/10	C, N, R	H, J, K, C, E	B, D	S	P, R	ANG,DAL,IRC
RN^55@5762%&	57,600	1/10	C, N, R	H, J, K, C, E	B, D, F	S	P, R	ANG,DAL,IRC
RN^55@5832%&	58,300	1/10	C, N, R	H, J, K, C, E	B, D	S	P, R	ANG,DAL,IRC
RN^55@5902%&	59,000	1/10	C, N, R	H, J, K, C, E	B, D, F	S	P, R	ANG,DAL,IRC
RN^55@5972%&	59,700	1/10	C, N, R	H, J, K, C, E	B, D	S	P, R	ANG,DAL,IRC
RN^55@6042%&	60,400	1/10	C, N, R	H, J, K, C, E	B, D, F	S	P, R	ANG,DAL,IRC
RN^55@6122%&	61,200	1/10	C, N, R	H, J, K, C, E	B, D	S	P, R	ANG,DAL,IRC
RN^55@6192%&	61,900	1/10	C, N, R	H, J, K, C, E	B, D, F	S	P, R	ANG,DAL,IRC
RN^55@6262%&	62,600	1/10	C, N, R	H, J, K, C, E	B, D	S	P, R	ANG,DAL,IRC
RN^55@6342%&	63,400	1/10	C, N, R	H, J, K, C, E	B, D, F	S	P, R	ANG,DAL,IRC
RN^55@6422%&	64,200	1/10	C, N, R	H, J, K, C, E	B, D	S	P, R	ANG,DAL,IRC
RN^55@6492%&	64,900	1/10	C, N, R	H, J, K, C, E	B, D, F	S	P, R	ANG,DAL,IRC
RN^55@6572%&	65,700	1/10	C, N, R	H, J, K, C, E	B, D	S	P, R	ANG,DAL,IRC
RN^55@6652%&	66,500	1/10	C, N, R	H, J, K, C, E	B, D, F	S	P, R	ANG,DAL,IRC
RN^55@6732%&	67,300	1/10	C, N, R	H, J, K, C, E	B, D	S	P, R	ANG,DAL,IRC
RN^55@6812%&	68,100	1/10	C, N, R	H, J, K, C, E	B, D, F	S	P, R	ANG,DAL,IRC
RN^55@6902%&	69,000	1/10	C, N, R	H, J, K, C, E	B, D	S	P, R	ANG,DAL,IRC
RN^55@6982%&	69,800	1/10	C, N, R	H, J, K, C, E	B, D, F	S	P, R	ANG,DAL,IRC
RN^55@7062%&	70,600	1/10	C, N, R	H, J, K, C, E	B, D	S	P, R	ANG,DAL,IRC
RN^55@7152%&	71,500	1/10	C, N, R	H, J, K, C, E	B, D, F	S	P, R	ANG,DAL,IRC
RN^55@7232%&	72,300	1/10	C, N, R	H, J, K, C, E	B, D	S	P, R	ANG,DAL,IRC
RN^55@7322%&	73,200	1/10	C, N, R	H, J, K, C, E	B, D, F	S	P, R	ANG,DAL,IRC
RN^55@7412%&	74,100	1/10	C, N, R	H, J, K, C, E	B, D	S	P, R	ANG,DAL,IRC
RN^55@7502%&	75,000	1/10	C, N, R	H, J, K, C, E	B, D, F	S	P, R	ANG,DAL,IRC
RN^55@7592%&	75,900	1/10	C, N, R	H, J, K, C, E	B, D	S	P, R	ANG,DAL,IRC
RN^55@7682%&	76,800	1/10	C, N, R	H, J, K, C, E	B, D, F	S	P, R	ANG,DAL,IRC
RN^55@7772%&	77,700	1/10	C, N, R	H, J, K, C, E	B, D	S	P, R	ANG,DAL,IRC
RN^55@7872%&	78,700	1/10	C, N, R	H, J, K, C, E	B, D, F	S	P, R	ANG,DAL,IRC
RN^55@7962%&	79,600	1/10	C, N, R	H, J, K, C, E	B, D	S	P, R	ANG,DAL,IRC
RN^55@8062%&	80,600	1/10	C, N, R	H, J, K, C, E	B, D, F	S	P, R	ANG,DAL,IRC
RN^55@8162%&	81,600	1/10	C, N, R	H, J, K, C, E	B, D	S	P, R	ANG,DAL,IRC
RN^55@8252%&	82,500	1/10	C, N, R	H, J, K, C, E	B, D, F	S	P, R	ANG,DAL,IRC
RN^55@8352%&	83,500	1/10	C, N, R	H, J, K, C, E	B, D	S	P, R	ANG,DAL,IRC
RN^55@8452%&	84,500	1/10	C, N, R	H, J, K, C, E	B, D, F	S	P, R	ANG,DAL,IRC
RN^55@8562%&	85,600	1/10	C, N, R	H, J, K, C, E	B, D	S	P, R	ANG,DAL,IRC

RN^55@8662%&	86,600	1/10	C, N, R	H, J, K, C, E	B, D, F	S	P, R	ANG,DAL,IRC
RN^55@8762%&	87,600	1/10	C, N, R	H, J, K, C, E	B, D	S	P, R	ANG,DAL,IRC
RN^55@8872%&	88,700	1/10	C, N, R	H, J, K, C, E	B, D, F	S	P, R	ANG,DAL,IRC
RN^55@8982%&	89,800	1/10	C, N, R	H, J, K, C, E	B, D	S	P, R	ANG,DAL,IRC
RN^55@9092%&	90,900	1/10	C, N, R	H, J, K, C, E	B, D, F	S	P, R	ANG,DAL,IRC
RN^55@9202%&	92,000	1/10	C, N, R	H, J, K, C, E	B, D	S	P, R	ANG,DAL,IRC
RN^55@9312%&	93,100	1/10	C, N, R	H, J, K, C, E	B, D, F	S	P, R	ANG,DAL,IRC
RN^55@9422%&	94,200	1/10	C, N, R	H, J, K, C, E	B, D	S	P, R	ANG,DAL,IRC
RN^55@9532%&	95,300	1/10	C, N, R	H, J, K, C, E	B, D, F	S	P, R	ANG,DAL,IRC
RN^55@9652%&	96,500	1/10	C, N, R	H, J, K, C, E	B, D	S	P, R	ANG,DAL,IRC
RN^55@9762%&	97,600	1/10	C, N, R	H, J, K, C, E	B, D, F	S	P, R	ANG,DAL,IRC
RN^55@9882%&	98,800	1/10	C, N, R	H, J, K, C, E	B, D	S	P, R	ANG,DAL,IRC
RN^55@1003%&	100,000	1/10	C, N, R	H, J, K, C, E	B, D, F	S	P, R	ANG,DAL,IRC
RN^55@1013%&	101,000	1/10	C, N, R	H, J, K, C, E	B, D	S	P, R	ANG,DAL,IRC
RN^55@1023%&	102,000	1/10	C, N, R	H, J, K, C, E	B, D, F	S	P, R	ANG,DAL,IRC
RN^55@1043%&	104,000	1/10	C, N, R	H, J, K, C, E	B, D	S	P, R	ANG,DAL,IRC
RN^55@1053%&	105,000	1/10	C, N, R	H, J, K, C, E	B, D, F	S	P, R	ANG,DAL,IRC
RN^55@1063%&	106,000	1/10	C, N, R	H, J, K, C, E	B, D	S	P, R	ANG,DAL,IRC
RN^55@1073%&	107,000	1/10	C, N, R	H, J, K, C, E	B, D, F	S	P, R	ANG,DAL,IRC
RN^55@1093%&	109,000	1/10	C, N, R	H, J, K, C, E	B, D	S	P, R	ANG,DAL,IRC
RN^55@1103%&	110,000	1/10	C, N, R	H, J, K, C, E	B, D, F	S	P, R	ANG,DAL,IRC
RN^55@1113%&	111,000	1/10	C, N, R	H, J, K, C, E	B, D	S	P, R	ANG,DAL,IRC
RN^55@1133%&	113,000	1/10	C, N, R	H, J, K, C, E	B, D, F	S	P, R	ANG,DAL,IRC
RN^55@1143%&	114,000	1/10	C, N, R	H, J, K, C, E	B, D	S	P, R	ANG,DAL,IRC
RN^55@1153%&	115,000	1/10	C, N, R	H, J, K, C, E	B, D, F	S	P, R	ANG,DAL,IRC
RN^55@1173%&	117,000	1/10	C, N, R	H, J, K, C, E	B, D	S	P, R	ANG,DAL,IRC
RN^55@1183%&	118,000	1/10	C, N, R	H, J, K, C, E	B, D, F	S	P, R	ANG,DAL,IRC
RN^55@1203%&	120,000	1/10	C, N, R	H, J, K, C, E	B, D	S	P, R	ANG,DAL,IRC
RN^55@1213%&	121,000	1/10	C, N, R	H, J, K, C, E	B, D, F	S	P, R	ANG,DAL,IRC
RN^55@1233%&	123,000	1/10	C, N, R	H, J, K, C, E	B, D	S	P, R	ANG,DAL,IRC
RN^55@1243%&	124,000	1/10	C, N, R	H, J, K, C, E	B, D, F	S	P, R	ANG,DAL,IRC
RN^55@1263%&	126,000	1/10	C, N, R	H, J, K, C, E	B, D	S	P, R	ANG,DAL,IRC
RN^55@1273%&	127,000	1/10	C, N, R	H, J, K, C, E	B, D, F	S	P, R	ANG,DAL,IRC
RN^55@1293%&	129,000	1/10	C, N, R	H, J, K, C, E	B, D	S	P, R	ANG,DAL,IRC
RN^55@1303%&	130,000	1/10	C, N, R	H, J, K, C, E	B, D, F	S	P, R	ANG,DAL,IRC
RN^55@1323%&	132,000	1/10	C, N, R	H, J, K, C, E	B, D	S	P, R	ANG,DAL,IRC
RN^55@1333%&	133,000	1/10	C, N, R	H, J, K, C, E	B, D, F	S	P, R	ANG,DAL,IRC
RN^55@1353%&	135,000	1/10	C, N, R	H, J, K, C, E	B, D	S	P, R	ANG,DAL,IRC
RN^55@1373%&	137,000	1/10	C, N, R	H, J, K, C, E	B, D, F	S	P, R	ANG,DAL,IRC
RN^55@1383%&	138,000	1/10	C, N, R	H, J, K, C, E	B, D	S	P, R	ANG,DAL,IRC
RN^55@1403%&	140,000	1/10	C, N, R	H, J, K, C, E	B, D, F	S	P, R	ANG,DAL,IRC
RN^55@1423%&	142,000	1/10	C, N, R	H, J, K, C, E	B, D	S	P, R	ANG,DAL,IRC
RN^55@1433%&	143,000	1/10	C, N, R	H, J, K, C, E	B, D, F	S	P, R	ANG,DAL,IRC
RN^55@1453%&	145,000	1/10	C, N, R	H, J, K, C, E	B, D	S	P, R	ANG,DAL,IRC
RN^55@1473%&	147,000	1/10	C, N, R	H, J, K, C, E	B, D, F	S	P, R	ANG,DAL,IRC
RN^55@1493%&	149,000	1/10	C, N, R	H, J, K, C, E	B, D	S	P, R	ANG,DAL,IRC
RN^55@1503%&	150,000	1/10	C, N, R	H, J, K, C, E	B, D, F	S	P, R	ANG,DAL,IRC

RN^55@1523%&	152,000	1/10	C, N, R	H, J, K, C, E	B, D	S	P, R	ANG,DAL,IRC
RN^55@1543%&	154,000	1/10	C, N, R	H, J, K, C, E	B, D, F	S	P, R	ANG,DAL,IRC
RN^55@1563%&	156,000	1/10	C, N, R	H, J, K, C, E	B, D	S	P, R	ANG,DAL,IRC
RN^55@1583%&	158,000	1/10	C, N, R	H, J, K, C, E	B, D, F	S	P, R	ANG,DAL,IRC
RN^55@1603%&	160,000	1/10	C, N, R	H, J, K, C, E	B, D	S	P, R	ANG,DAL,IRC
RN^55@1623%&	162,000	1/10	C, N, R	H, J, K, C, E	B, D, F	S	P, R	ANG,DAL,IRC
RN^55@1643%&	164,000	1/10	C, N, R	H, J, K, C, E	B, D	S	P, R	ANG,DAL,IRC
RN^55@1653%&	165,000	1/10	C, N, R	H, J, K, C, E	B, D, F	S	P, R	ANG,DAL,IRC
RN^55@1673%&	167,000	1/10	C, N, R	H, J, K, C, E	B, D	S	P, R	ANG,DAL,IRC
RN^55@1693%&	169,000	1/10	C, N, R	H, J, K, C, E	B, D, F	S	P, R	ANG,DAL,IRC
RN^55@1723%&	172,000	1/10	C, N, R	H, J, K, C, E	B, D	S	P, R	ANG,DAL,IRC
RN^55@1743%&	174,000	1/10	C, N, R	H, J, K, C, E	B, D, F	S	P, R	ANG,DAL,IRC
RN^55@1763%&	176,000	1/10	C, N, R	H, J, K, C, E	B, D	S	P, R	ANG,DAL,IRC
RN^55@1783%&	178,000	1/10	C, N, R	H, J, K, C, E	B, D, F	S	P, R	ANG,DAL,IRC
RN^55@1803%&	180,000	1/10	C, N, R	H, J, K, C, E	B, D	S	P, R	ANG,DAL,IRC
RN^55@1823%&	182,000	1/10	C, N, R	H, J, K, C, E	B, D, F	S	P, R	ANG,DAL,IRC
RN^55@1843%&	184,000	1/10	C, N, R	H, J, K, C, E	B, D	S	P, R	ANG,DAL,IRC
RN^55@1873%&	187,000	1/10	C, N, R	H, J, K, C, E	B, D, F	S	P, R	ANG,DAL,IRC
RN^55@1893%&	189,000	1/10	C, N, R	H, J, K, C, E	B, D	S	P, R	ANG,DAL,IRC
RN^55@1913%&	191,000	1/10	C, N, R	H, J, K, C, E	B, D, F	S	P, R	ANG,DAL,IRC
RN^55@1933%&	193,000	1/10	C, N, R	H, J, K, C, E	B, D	S	P, R	ANG,DAL,IRC
RN^55@1963%&	196,000	1/10	C, N, R	H, J, K, C, E	B, D, F	S	P, R	ANG,DAL,IRC
RN^55@1983%&	198,000	1/10	C, N, R	H, J, K, C, E	B, D	S	P, R	ANG,DAL,IRC
RN^55@2003%&	200,000	1/10	C, N, R	H, J, K, C, E	B, D, F	S	P, R	ANG,DAL,IRC
RN^55@2033%&	203,000	1/10	C, N, R	H, J, K, C, E	B, D	S	P, R	ANG,DAL,IRC
RN^55@2053%&	205,000	1/10	C, N, R	H, J, K, C, E	B, D, F	S	P, R	ANG,DAL,IRC
RN^55@2083%&	208,000	1/10	C, N, R	H, J, K, C, E	B, D	S	P, R	ANG,DAL,IRC
RN^55@2103%&	210,000	1/10	C, N, R	H, J, K, C, E	B, D, F	S	P, R	ANG,DAL,IRC
RN^55@2133%&	213,000	1/10	C, N, R	H, J, K, C, E	B, D	S	P, R	ANG,DAL,IRC
RN^55@2153%&	215,000	1/10	C, N, R	H, J, K, C, E	B, D, F	S	P, R	ANG,DAL,IRC
RN^55@2183%&	218,000	1/10	C, N, R	H, J, K, C, E	B, D	S	P, R	ANG,DAL,IRC
RN^55@2213%&	221,000	1/10	C, N, R	H, J, K, C, E	B, D, F	S	P, R	ANG,DAL,IRC
RN^55@2233%&	223,000	1/10	C, N, R	H, J, K, C, E	B, D	S	P, R	ANG,DAL,IRC
RN^55@2263%&	226,000	1/10	C, N, R	H, J, K, C, E	B, D, F	S	P, R	ANG,DAL,IRC
RN^55@2293%&	229,000	1/10	C, N, R	H, J, K, C, E	B, D	S	P, R	ANG,DAL,IRC
RN^55@2323%&	232,000	1/10	C, N, R	H, J, K, C, E	B, D, F	S	P, R	ANG,DAL,IRC
RN^55@2343%&	234,000	1/10	C, N, R	H, J, K, C, E	B, D	S	P, R	ANG,DAL,IRC
RN^55@2373%&	237,000	1/10	C, N, R	H, J, K, C, E	B, D, F	S	P, R	ANG,DAL,IRC
RN^55@2403%&	240,000	1/10	C, N, R	H, J, K, C, E	B, D	S	P, R	ANG,DAL,IRC
RN^55@2433%&	243,000	1/10	C, N, R	H, J, K, C, E	B, D, F	S	P, R	ANG,DAL,IRC
RN^55@2463%&	246,000	1/10	C, N, R	H, J, K, C, E	B, D	S	P, R	ANG,DAL,IRC
RN^55@2493%&	249,000	1/10	C, N, R	H, J, K, C, E	B, D, F	S	P, R	ANG,DAL,IRC
RN^55@2523%&	252,000	1/10	C, N, R	H, J, K, C, E	B, D	S	P, R	ANG,DAL,IRC
RN^55@2553%&	255,000	1/10	C, N, R	H, J, K, C, E	B, D, F	S	P, R	ANG,DAL,IRC
RN^55@2583%&	258,000	1/10	C, N, R	H, J, K, C, E	B, D	S	P, R	ANG,DAL,IRC
RN^55@2613%&	261,000	1/10	C, N, R	H, J, K, C, E	B, D, F	S	P, R	ANG,DAL,IRC
RN^55@2643%&	264,000	1/10	C, N, R	H, J, K, C, E	B, D	S	P, R	ANG,DAL,IRC

RN^55@2673%&	267,000	1/10	C, N, R	H, J, K, C, E	B, D, F	S	P, R	ANG,DAL,IRC
RN^55@2713%&	271,000	1/10	C, N, R	H, J, K, C, E	B, D	S	P, R	ANG,DAL,IRC
RN^55@2743%&	274,000	1/10	C, N, R	H, J, K, C, E	B, D, F	S	P, R	ANG,DAL,IRC
RN^55@2773%&	277,000	1/10	C, N, R	H, J, K, C, E	B, D	S	P, R	ANG,DAL,IRC
RN^55@2803%&	280,000	1/10	C, N, R	H, J, K, C, E	B, D, F	S	P, R	ANG,DAL,IRC
RN^55@2843%&	284,000	1/10	C, N, R	H, J, K, C, E	B, D	S	P, R	ANG,DAL,IRC
RN^55@2873%&	287,000	1/10	C, N, R	H, J, K, C, E	B, D, F	S	P, R	ANG,DAL,IRC
RN^55@2913%&	291,000	1/10	C, N, R	H, J, K, C, E	B, D	S	P, R	ANG,DAL,IRC
RN^55@2943%&	294,000	1/10	C, N, R	H, J, K, C, E	B, D, F	S	P, R	ANG,DAL,IRC
RN^55@2983%&	298,000	1/10	C, N, R	H, J, K, C, E	B, D	S	P, R	ANG,DAL,IRC
RN^55@3013%&	301,000	1/10	C, N, R	H, J, K, C, E	B, D, F	S	P, R	ANG,DAL,IRC
RN^55@3053%&	305,000	1/10	C, N, R	H, J, K, C, E	B, D	S	P, R	ANG,DAL,IRC
RN^55@3093%&	309,000	1/10	C, N, R	H, J, K, C, E	B, D, F	S	P, R	ANG,DAL,IRC
RN^55@3123%&	312,000	1/10	C, N, R	H, J, K, C, E	B, D	S	P, R	ANG,DAL,IRC
RN^55@3163%&	316,000	1/10	C, N, R	H, J, K, C, E	B, D, F	S	P, R	ANG,DAL,IRC
RN^55@3203%&	320,000	1/10	C, N, R	H, J, K, C, E	B, D	S	P, R	ANG,DAL,IRC
RN^55@3243%&	324,000	1/10	C, N, R	H, J, K, C, E	B, D, F	S	P, R	ANG,DAL,IRC
RN^55@3283%&	328,000	1/10	C, N, R	H, J, K, C, E	B, D	S	P, R	ANG,DAL,IRC
RN^55@3323%&	332,000	1/10	C, N, R	H, J, K, C, E	B, D, F	S	P, R	ANG,DAL,IRC
RN^55@3363%&	336,000	1/10	C, N, R	H, J, K, C, E	B, D	S	P, R	ANG,DAL,IRC
RN^55@3403%&	340,000	1/10	C, N, R	H, J, K, C, E	B, D, F	S	P, R	ANG,DAL,IRC
RN^55@3443%&	344,000	1/10	C, N, R	H, J, K, C, E	B, D	S	P, R	ANG,DAL,IRC
RN^55@3483%&	348,000	1/10	C, N, R	H, J, K, C, E	B, D, F	S	P, R	ANG,DAL,IRC
RN^55@3523%&	352,000	1/10	C, N, R	H, J, K, C, E	B, D	S	P, R	ANG,DAL,IRC
RN^55@3573%&	357,000	1/10	C, N, R	H, J, K, C, E	B, D, F	S	P, R	ANG,DAL,IRC
RN^55@3613%&	361,000	1/10	C, N, R	H, J, K, C, E	B, D	S	P, R	ANG,DAL,IRC
RN^55@3653%&	365,000	1/10	C, N, R	H, J, K, C, E	B, D, F	S	P, R	ANG,DAL,IRC
RN^55@3703%&	370,000	1/10	C, N, R	H, J, K, C, E	B, D	S	P, R	ANG,DAL,IRC
RN^55@3743%&	374,000	1/10	C, N, R	H, J, K, C, E	B, D, F	S	P, R	ANG,DAL,IRC
RN^55@3793%&	379,000	1/10	C, N, R	H, J, K, C, E	B, D	S	P, R	ANG,DAL,IRC
RN^55@3833%&	383,000	1/10	C, N, R	H, J, K, C, E	B, D, F	S	P, R	ANG,DAL,IRC
RN^55@3883%&	388,000	1/10	C, N, R	H, J, K, C, E	B, D	S	P, R	ANG,DAL,IRC
RN^55@3923%&	392,000	1/10	C, N, R	H, J, K, C, E	B, D, F	S	P, R	ANG,DAL,IRC
RN^55@3973%&	397,000	1/10	C, N, R	H, J, K, C, E	B, D	S	P, R	ANG,DAL,IRC
RN^55@4023%&	402,000	1/10	C, N, R	H, J, K, C, E	B, D, F	S	P, R	ANG,DAL,IRC
RN^55@4073%&	407,000	1/10	C, N, R	H, J, K, C, E	B, D	S	P, R	ANG,DAL,IRC
RN^55@4123%&	412,000	1/10	C, N, R	H, J, K, C, E	B, D, F	S	P, R	ANG,DAL,IRC
RN^55@4173%&	417,000	1/10	C, N, R	H, J, K, C, E	B, D	S	P, R	ANG,DAL,IRC
RN^55@4223%&	422,000	1/10	C, N, R	H, J, K, C, E	B, D, F	S	P, R	ANG,DAL,IRC
RN^55@4273%&	427,000	1/10	C, N, R	H, J, K, C, E	B, D	S	P, R	ANG,DAL,IRC
RN^55@4323%&	432,000	1/10	C, N, R	H, J, K, C, E	B, D, F	S	P, R	ANG,DAL,IRC
RN^55@4373%&	437,000	1/10	C, N, R	H, J, K, C, E	B, D	S	P, R	ANG,DAL,IRC
RN^55@4423%&	442,000	1/10	C, N, R	H, J, K, C, E	B, D, F	S	P, R	ANG,DAL,IRC
RN^55@4483%&	448,000	1/10	C, N, R	H, J, K, C, E	B, D	S	P, R	ANG,DAL,IRC
RN^55@4533%&	453,000	1/10	C, N, R	H, J, K, C, E	B, D, F	S	P, R	ANG,DAL,IRC
RN^55@4593%&	459,000	1/10	C, N, R	H, J, K, C, E	B, D	S	P, R	ANG,DAL,IRC
RN^55@4643%&	464,000	1/10	C, N, R	H, J, K, C, E	B, D, F	S	P, R	ANG,DAL,IRC

RN^55@4703%&	470,000	1/10	C, N, R	H, J, K, C, E	B, D	S	P, R	ANG,DAL,IRC
RN^55@4753%&	475,000	1/10	C, N, R	H, J, K, C, E	B, D, F	S	P, R	ANG,DAL,IRC
RN^55@4813%&	481,000	1/10	C, N, R	H, J, K, C, E	B, D	S	P, R	ANG,DAL,IRC
RN^55@4873%&	487,000	1/10	C, N, R	H, J, K, C, E	B, D, F	S	P, R	ANG,DAL,IRC
RN^55@4933%&	493,000	1/10	C, N, R	H, J, K, C, E	B, D	S	P, R	ANG,DAL,IRC
RN^55@4993%&	499,000	1/10	C, N, R	H, J, K, C, E	B, D, F	S	P, R	ANG,DAL,IRC
RN^55@5053%&	505,000	1/10	C, N, R	H, J, K, C, E	B, D	S	P, R	ANG,DAL,IRC
RN^55@5113%&	511,000	1/10	C, N, R	H, J, K, C, E	B, D, F	S	P, R	ANG,DAL,IRC
RN^55@5173%&	517,000	1/10	C, N, R	H, J, K, C, E	B, D	S	P, R	ANG,DAL,IRC
RN^55@5233%&	523,000	1/10	C, N, R	H, J, K, C, E	B, D, F	S	P, R	ANG,DAL,IRC
RN^55@5303%&	530,000	1/10	C, N, R	H, J, K, C, E	B, D	S	P, R	ANG,DAL,IRC
RN^55@5363%&	536,000	1/10	C, N, R	H, J, K, C, E	B, D, F	S	P, R	ANG,DAL,IRC
RN^55@5423%&	542,000	1/10	C, N, R	H, J, K, C, E	B, D	S	P, R	ANG,DAL,IRC
RN^55@5493%&	549,000	1/10	C, N, R	H, J, K, C, E	B, D, F	S	P, R	ANG,DAL,IRC
RN^55@5563%&	556,000	1/10	C, N, R	H, J, K, C, E	B, D	S	P, R	ANG,DAL,IRC
RN^55@5623%&	562,000	1/10	C, N, R	H, J, K, C, E	B, D, F	S	P, R	ANG,DAL,IRC
RN^55@5693%&	569,000	1/10	C, N, R	H, J, K, C, E	B, D	S	P, R	ANG,DAL,IRC
RN^55@5763%&	576,000	1/10	C, N, R	H, J, K, C, E	B, D, F	S	P, R	ANG,DAL,IRC
RN^55@5833%&	583,000	1/10	C, N, R	H, J, K, C, E	B, D	S	P, R	ANG,DAL,IRC
RN^55@5903%&	590,000	1/10	C, N, R	H, J, K, C, E	B, D, F	S	P, R	ANG,DAL,IRC
RN^55@5973%&	597,000	1/10	C, N, R	H, J, K, C, E	B, D	S	P, R	ANG,DAL,IRC
RN^55@6043%&	604,000	1/10	C, N, R	H, J, K, C, E	B, D, F	S	P, R	ANG,DAL,IRC
RN^55@6123%&	612,000	1/10	C, N, R	H, J, K, C, E	B, D	S	P, R	ANG,DAL,IRC
RN^55@6193%&	619,000	1/10	C, N, R	H, J, K, C, E	B, D, F	S	P, R	ANG,DAL,IRC
RN^55@6263%&	626,000	1/10	C, N, R	H, J, K, C, E	B, D	S	P, R	ANG,DAL,IRC
RN^55@6343%&	634,000	1/10	C, N, R	H, J, K, C, E	B, D, F	S	P, R	ANG,DAL,IRC
RN^55@6423%&	642,000	1/10	C, N, R	H, J, K, C, E	B, D	S	P, R	ANG,DAL,IRC
RN^55@6493%&	649,000	1/10	C, N, R	H, J, K, C, E	B, D, F	S	P, R	ANG,DAL,IRC
RN^55@6573%&	657,000	1/10	C, N, R	H, J, K, C, E	B, D	S	P, R	ANG,DAL,IRC
RN^55@6653%&	665,000	1/10	C, N, R	H, J, K, C, E	B, D, F	S	P, R	ANG,DAL,IRC
RN^55@6733%&	673,000	1/10	C, N, R	H, J, K, C, E	B, D	S	P, R	ANG,DAL,IRC
RN^55@6813%&	681,000	1/10	C, N, R	H, J, K, C, E	B, D, F	S	P, R	ANG,DAL,IRC
RN^55@6903%&	690,000	1/10	C, N, R	H, J, K, C, E	B, D	S	P, R	ANG,DAL,IRC
RN^55@6983%&	698,000	1/10	C, N, R	H, J, K, C, E	B, D, F	S	P, R	ANG,DAL,IRC
RN^55@7063%&	706,000	1/10	C, N, R	H, J, K, C, E	B, D	S	P, R	ANG,DAL,IRC
RN^55@7153%&	715,000	1/10	C, N, R	H, J, K, C, E	B, D, F	S	P, R	ANG,DAL,IRC
RN^55@7233%&	723,000	1/10	C, N, R	H, J, K, C, E	B, D	S	P, R	ANG,DAL,IRC
RN^55@7323%&	732,000	1/10	C, N, R	H, J, K, C, E	B, D, F	S	P, R	ANG,DAL,IRC
RN^55@7413%&	741,000	1/10	C, N, R	H, J, K, C, E	B, D	S	P, R	ANG,DAL,IRC
RN^55@7503%&	750,000	1/10	C, N, R	H, J, K, C, E	B, D, F	S	P, R	ANG,DAL,IRC
RN^55@7593%&	759,000	1/10	C, N, R	H, J, K, C, E	B, D	S	P, R	ANG,DAL,IRC
RN^55@7683%&	768,000	1/10	C, N, R	H, J, K, C, E	B, D, F	S	P, R	ANG,DAL,IRC
RN^55@7773%&	777,000	1/10	C, N, R	H, J, K, C, E	B, D	S	P, R	ANG,DAL,IRC
RN^55@7873%&	787,000	1/10	C, N, R	H, J, K, C, E	B, D, F	S	P, R	ANG,DAL,IRC
RN^55@7963%&	796,000	1/10	C, N, R	H, J, K, C, E	B, D	S	P, R	ANG,DAL,IRC
RN^55@8063%&	806,000	1/10	C, N, R	H, J, K, C, E	B, D, F	S	P, R	ANG,DAL,IRC
RN^55@8163%&	816,000	1/10	C, N, R	H, J, K, C, E	B, D	S	P, R	ANG,DAL,IRC

RN^55@8253%&	825,000	1/10	C, N, R	H, J, K, C, E	B, D, F	S	P, R	ANG,DAL,IRC
RN^55@8353%&	835,000	1/10	C, N, R	H, J, K, C, E	B, D	S	P, R	ANG,DAL,IRC
RN^55@8453%&	845,000	1/10	C, N, R	H, J, K, C, E	B, D, F	S	P, R	ANG,DAL,IRC
RN^55@8563%&	856,000	1/10	C, N, R	H, J, K, C, E	B, D	S	P, R	ANG,DAL,IRC
RN^55@8663%&	866,000	1/10	C, N, R	H, J, K, C, E	B, D, F	S	P, R	ANG,DAL,IRC
RN^55@8763%&	876,000	1/10	C, N, R	H, J, K, C, E	B, D	S	P, R	ANG,DAL,IRC
RN^55@8873%&	887,000	1/10	C, N, R	H, J, K, C, E	B, D, F	S	P, R	ANG,DAL,IRC
RN^55@8983%&	898,000	1/10	C, N, R	H, J, K, C, E	B, D	S	P, R	ANG,DAL,IRC
RN^55@9093%&	909,000	1/10	C, N, R	H, J, K, C, E	B, D, F	S	P, R	ANG,DAL,IRC
RN^55@9203%&	920,000	1/10	C, N, R	H, J, K, C, E	B, D	S	P, R	ANG,DAL,IRC
RN^55@9313%&	931,000	1/10	C, N, R	H, J, K, C, E	B, D, F	S	P, R	ANG,DAL,IRC
RN^55@9423%&	942,000	1/10	C, N, R	H, J, K, C, E	B, D	S	P, R	ANG,DAL,IRC
RN^55@9533%&	953,000	1/10	C, N, R	H, J, K, C, E	B, D, F	S	P, R	ANG,DAL,IRC
RN^55@9653%&	965,000	1/10	C, N, R	H, J, K, C, E	B, D	S	P, R	ANG,DAL,IRC
RN^55@9763%&	976,000	1/10	C, N, R	H, J, K, C, E	B, D, F	S	P, R	ANG,DAL,IRC
RN^55@9883%&	988,000	1/10	C, N, R	H, J, K, C, E	B, D	S	P, R	ANG,DAL,IRC
RN^55@1004%&	1,000,000	1/10	C, N, R	H, J, K, C, E	B, D, F	S	P, R	ANG,DAL,IRC
RN^55@1014%&	1,010,000	1/10	C, N, R	H, J, K, C, E	B, D	S	P, R	ANG,DAL,IRC
RN^55@1024%&	1,020,000	1/10	C, N, R	H, J, K, C, E	B, D, F	S	P, R	ANG,DAL,IRC
RN^55@1044%&	1,040,000	1/10	C, N, R	H, J, K, C, E	B, D	S	P, R	ANG,DAL,IRC
RN^55@1054%&	1,050,000	1/10	C, N, R	H, J, K, C, E	B, D, F	S	P, R	ANG,DAL,IRC
RN^55@1064%&	1,060,000	1/10	C, N, R	H, J, K, C, E	B, D	S	P, R	ANG,DAL,IRC
RN^55@1074%&	1,070,000	1/10	C, N, R	H, J, K, C, E	B, D, F	S	P, R	ANG,DAL,IRC
RN^55@1094%&	1,090,000	1/10	C, N, R	H, J, K, C, E	B, D	S	P, R	ANG,DAL,IRC
RN^55@1104%&	1,100,000	1/10	C, N, R	H, J, K, C, E	B, D, F	S	P, R	ANG,DAL,IRC
RN^55@1114%&	1,110,000	1/10	C, N, R	H, J, K, C, E	B, D	S	P, R	ANG,DAL,IRC
RN^55@1134%&	1,130,000	1/10	C, N, R	H, J, K, C, E	B, D, F	S	P, R	ANG,DAL,IRC
RN^55@1144%&	1,140,000	1/10	C, N, R	H, J, K, C, E	B, D	S	P, R	ANG,DAL,IRC
RN^55@1154%&	1,150,000	1/10	C, N, R	H, J, K, C, E	B, D, F	S	P, R	ANG,DAL,IRC
RN^55@1174%&	1,170,000	1/10	C, N, R	H, J, K, C, E	B, D	S	P, R	ANG,DAL,IRC
RN^55@1184%&	1,180,000	1/10	C, N, R	H, J, K, C, E	B, D, F	S	P, R	ANG,DAL,IRC
RN^55@1204%&	1,200,000	1/10	C, N, R	H, J, K, C, E	B, D	S	P, R	ANG,DAL,IRC
RN^55@1214%&	1,210,000	1/10	C, N, R	H, J, K, C, E	B, D, F	S	P, R	ANG,DAL,IRC
RN^55@1234%&	1,230,000	1/10	C, N, R	H, J, K, C, E	B, D	S	P, R	DAL, IRC
RN^55@1244%&	1,240,000	1/10	C, N, R	H, J, K, C, E	B, D, F	S	P, R	DAL, IRC
RN^55@1264%&	1,260,000	1/10	C, N, R	H, J, K, C, E	B, D	S	P, R	DAL, IRC
RN^55@1274%&	1,270,000	1/10	C, N, R	H, J, K, C, E	B, D, F	S	P, R	DAL, IRC
RN^55@1294%&	1,290,000	1/10	C, N, R	H, J, K, C, E	B, D	S	P, R	DAL, IRC
RN^55@1304%&	1,300,000	1/10	C, N, R	H, J, K, C, E	B, D, F	S	P, R	DAL, IRC
RN^55@1324%&	1,320,000	1/10	C, N, R	H, J, K, C, E	B, D	S	P, R	DAL, IRC
RN^55@1334%&	1,330,000	1/10	C, N, R	H, J, K, C, E	B, D, F	S	P, R	DAL, IRC
RN^55@1354%&	1,350,000	1/10	C, N, R	H, J, K, C, E	B, D	S	P, R	DAL, IRC
RN^55@1374%&	1,370,000	1/10	C, N, R	H, J, K, C, E	B, D, F	S	P, R	DAL, IRC
RN^55@1384%&	1,380,000	1/10	C, N, R	H, J, K, C, E	B, D	S	P, R	DAL, IRC
RN^55@1404%&	1,400,000	1/10	C, N, R	H, J, K, C, E	B, D, F	S	P, R	DAL, IRC
RN^55@1424%&	1,420,000	1/10	C, N, R	H, J, K, C, E	B, D	S	P, R	DAL, IRC
RN^55@1434%&	1,430,000	1/10	C, N, R	H, J, K, C, E	B, D, F	S	P, R	DAL, IRC

RN^55@1454%&	1,450,000	1/10	C, N, R	H, J, K, C, E	B, D	S	P, R	DAL, IRC
RN^55@1474%&	1,470,000	1/10	C, N, R	H, J, K, C, E	B, D, F	S	P, R	DAL, IRC
RN^55@1494%&	1,490,000	1/10	C, N, R	H, J, K, C, E	B, D	S	P, R	DAL, IRC
RN^55@1504%&	1,500,000	1/10	C, N, R	H, J, K, C, E	B, D, F	S	P, R	DAL, IRC
RN^55@1524%&	1,520,000	1/10	C, N, R	H, J, K, C, E	B, D	S	P, R	DAL, IRC
RN^55@1544%&	1,540,000	1/10	C, N, R	H, J, K, C, E	B, D, F	S	P, R	DAL, IRC
RN^55@1564%&	1,560,000	1/10	C, N, R	H, J, K, C, E	B, D	S	P, R	DAL, IRC
RN^55@1584%&	1,580,000	1/10	C, N, R	H, J, K, C, E	B, D, F	S	P, R	DAL, IRC
RN^55@1604%&	1,600,000	1/10	C, N, R	H, J, K, C, E	B, D	S	P, R	DAL, IRC
RN^55@1624%&	1,620,000	1/10	C, N, R	H, J, K, C, E	B, D, F	S	P, R	DAL, IRC
RN^55@1644%&	1,640,000	1/10	C, N, R	H, J, K, C, E	B, D	S	P, R	DAL, IRC
RN^55@1654%&	1,650,000	1/10	C, N, R	H, J, K, C, E	B, D, F	S	P, R	DAL, IRC
RN^55@1674%&	1,670,000	1/10	C, N, R	H, J, K, C, E	B, D	S	P, R	DAL, IRC
RN^55@1694%&	1,690,000	1/10	C, N, R	H, J, K, C, E	B, D, F	S	P, R	DAL, IRC
RN^55@1724%&	1,720,000	1/10	C, N, R	H, J, K, C, E	B, D	S	P, R	DAL, IRC
RN^55@1744%&	1,740,000	1/10	C, N, R	H, J, K, C, E	B, D, F	S	P, R	DAL, IRC
RN^55@1764%&	1,760,000	1/10	C, N, R	H, J, K, C, E	B, D	S	P, R	DAL, IRC
RN^55@1784%&	1,780,000	1/10	C, N, R	H, J, K, C, E	B, D, F	S	P, R	DAL, IRC
RN^55@1804%&	1,800,000	1/10	C, N, R	H, J, K, C, E	B, D	S	P, R	DAL, IRC
RN^55@1824%&	1,820,000	1/10	C, N, R	H, J, K, C, E	B, D, F	S	P, R	DAL, IRC
RN^55@1844%&	1,840,000	1/10	C, N, R	H, J, K, C, E	B, D	S	P, R	DAL, IRC
RN^55@1874%&	1,870,000	1/10	C, N, R	H, J, K, C, E	B, D, F	S	P, R	DAL, IRC
RN^55@1894%&	1,890,000	1/10	C, N, R	H, J, K, C, E	B, D	S	P, R	DAL, IRC
RN^55@1914%&	1,910,000	1/10	C, N, R	H, J, K, C, E	B, D, F	S	P, R	DAL, IRC
RN^55@1934%&	1,930,000	1/10	C, N, R	H, J, K, C, E	B, D	S	P, R	DAL, IRC
RN^55@1964%&	1,960,000	1/10	C, N, R	H, J, K, C, E	B, D, F	S	P, R	DAL, IRC
RN^55@1984%&	1,980,000	1/10	C, N, R	H, J, K, C, E	B, D	S	P, R	DAL, IRC
RN^55@2004%&	2,000,000	1/10	C, N, R	H, J, K, C, E	B, D, F	S	P, R	DAL, IRC

RN^55 RESISTORS DECADE BREAKDOWN

Click on the link below to see the associated parts selection listing:

Resistance Range
10.0 Ohms through 98.8 Ohms
100 Ohms through 988 Ohms
1,000 Ohms through 9,880 Ohms
10,000 Ohms through 98,800 Ohms
100,000 Ohms through 988,000 Ohms
1,000,000 Ohms through 2,000,000 Ohms

RN^55 Film Resistors: 10.0 Ohms through 98.8 Ohms

	Resistance	Power	Term.	Char.	Res.	Level 1	Level 2	
Part Number	Value (Ohms)	Rating (W)	Type (^)	(@)	Tol. (%)	(FRL) (&)	(FRL) (&)	Manufacturer

RN^55@10R0%&	10.0	1/10	C, N, R	H, J, K, C, E	B, D, F	S	P, R	ANG, DAL, IRC
RN^55@10R1%&	10.1	1/10	C, N, R	H, J, K, C, E	B, D	S	P, R	ANG, DAL, IRC
RN^55@10R2%&	10.2	1/10	C, N, R	H, J, K, C, E	B, D, F	S	P, R	ANG, DAL, IRC
RN^55@10R4%&	10.4	1/10	C, N, R	H, J, K, C, E	B, D	S	P, R	ANG, DAL, IRC
RN^55@10R5%&	10.5	1/10	C, N, R	H, J, K, C, E	B, D, F	S	P, R	ANG, DAL, IRC
RN^55@10R6%&	10.6	1/10	C, N, R	H, J, K, C, E	B, D	S	P, R	ANG, DAL, IRC
RN^55@10R7%&	10.7	1/10	C, N, R	H, J, K, C, E	B, D, F	S	P, R	ANG, DAL, IRC
	Resistance	Power	Term.	Char.	Res.	Level 1	Level 2	
Part Number	Value (Ohms)	Rating (W)	Type (^)	(@)	Tol. (%)	(FRL) (&)	(FRL) (&)	Manufacturer
RN^55@10R9%&	10.9	1/10	C, N, R	H, J, K, C, E	B, D	S	P, R	ANG, DAL, IRC
RN^55@11R0%&	11.0	1/10	C, N, R	H, J, K, C, E	B, D, F	S	P, R	ANG, DAL, IRC
RN^55@11R1%&	11.1	1/10	C, N, R	H, J, K, C, E	B, D	S	P, R	ANG, DAL, IRC
RN^55@11R3%&	11.3	1/10	C, N, R	H, J, K, C, E	B, D, F	S	P, R	ANG, DAL, IRC
RN^55@11R4%&	11.4	1/10	C, N, R	H, J, K, C, E	B, D	S	P, R	ANG, DAL, IRC
RN^55@11R5%&	11.5	1/10	C, N, R	H, J, K, C, E	B, D, F	S	P, R	ANG, DAL, IRC
RN^55@11R7%&	11.7	1/10	C, N, R	H, J, K, C, E	B, D	S	P, R	ANG, DAL, IRC
	Resistance	Power	Term.	Char.	Res.	Level 1	Level 2	
Part Number	Value (Ohms)	Rating (W)	Type (^)	(@)	Tol. (%)	(FRL) (&)	(FRL) (&)	Manufacturer
RN^55@11R8%&	11.8	1/10	C, N, R	H, J, K, C, E	B, D, F	S	P, R	ANG, DAL, IRC
RN^55@12R0%&	12.0	1/10	C, N, R	H, J, K, C, E	B, D	S	P, R	ANG, DAL, IRC
RN^55@12R1%&	12.1	1/10	C, N, R	H, J, K, C, E	B, D, F	S	P, R	ANG, DAL, IRC
RN^55@12R3%&	12.3	1/10	C, N, R	H, J, K, C, E	B, D	S	P, R	ANG, DAL, IRC
RN^55@12R4%&	12.4	1/10	C, N, R	H, J, K, C, E	B, D, F	S	P, R	ANG, DAL, IRC
RN^55@12R6%&	12.6	1/10	C, N, R	H, J, K, C, E	B, D	S	P, R	ANG, DAL, IRC
RN^55@12R7%&	12.7	1/10	C, N, R	H, J, K, C, E	B, D, F	S	P, R	ANG, DAL, IRC
	Resistance	Power	Term.	Char.	Res.	Level 1	Level 2	
Part Number	Value (Ohms)	Rating (W)	Type (^)	(@)	Tol. (%)	(FRL) (&)	(FRL) (&)	Manufacturer
RN^55@12R9%&	12.9	1/10	C, N, R	H, J, K, C, E	B, D	S	P, R	ANG, DAL, IRC
RN^55@13R0%&	13.0	1/10	C, N, R	H, J, K, C, E	B, D, F	S	P, R	ANG, DAL, IRC
RN^55@13R2%&	13.2	1/10	C, N, R	H, J, K, C, E	B, D	S	P, R	ANG, DAL, IRC
RN^55@13R3%&	13.3	1/10	C, N, R	H, J, K, C, E	B, D, F	S	P, R	ANG, DAL, IRC
RN^55@13R5%&	13.5	1/10	C, N, R	H, J, K, C, E	B, D	S	P, R	ANG, DAL, IRC
RN^55@13R7%&	13.7	1/10	C, N, R	H, J, K, C, E	B, D, F	S	P, R	ANG, DAL, IRC
RN^55@13R8%&	13.8	1/10	C, N, R	H, J, K, C, E	B, D	S	P, R	ANG, DAL, IRC
	Resistance	Power	Term.	Char.	Res.	Level 1	Level 2	
Part Number	Value (Ohms)	Rating (W)	Type (^)	(@)	Tol. (%)	(FRL) (&)	(FRL) (&)	Manufacturer
RN^55@14R0%&	14.0	1/10	C, N, R	H, J, K, C, E	B, D, F	S	P, R	ANG, DAL, IRC
RN^55@14R2%&	14.2	1/10	C, N, R	H, J, K, C, E	B, D	S	P, R	ANG, DAL, IRC
RN^55@14R3%&	14.3	1/10	C, N, R	H, J, K, C, E	B, D, F	S	P, R	ANG, DAL, IRC
RN^55@14R5%&	14.5	1/10	C, N, R	H, J, K, C, E	B, D	S	P, R	ANG, DAL, IRC
RN^55@14R7%&	14.7	1/10	C, N, R	H, J, K, C, E	B, D, F	S	P, R	ANG, DAL, IRC
RN^55@14R9%&	14.9	1/10	C, N, R	H, J, K, C, E	B, D	S	P, R	ANG, DAL, IRC
RN^55@15R0%&	15.0	1/10	C, N, R	H, J, K, C, E	B, D, F	S	P, R	ANG, DAL, IRC
	Resistance	Power	Term.	Char.	Res.	Level 1	Level 2	
Part Number	Value (Ohms)	Rating (W)	Type (^)	(@)	Tol. (%)	(FRL) (&)	(FRL) (&)	Manufacturer
RN^55@15R2%&	15.2	1/10	C, N, R	H, J, K, C, E	B, D	S	P, R	ANG, DAL, IRC
RN^55@15R4%&	15.4	1/10	C, N, R	H, J, K, C, E	B, D, F	S	P, R	ANG, DAL, IRC

RN^55@15R6%&	15.6	1/10	C, N, R	H, J, K, C, E	B, D	S	P, R	ANG, DAL, IRC
RN^55@15R8%&	15.8	1/10	C, N, R	H, J, K, C, E	B, D, F	S	P, R	ANG, DAL, IRC
RN^55@16R0%&	16.0	1/10	C, N, R	H, J, K, C, E	B, D	S	P, R	ANG, DAL, IRC
RN^55@16R2%&	16.2	1/10	C, N, R	H, J, K, C, E	B, D, F	S	P, R	ANG, DAL, IRC
RN^55@16R4%&	16.4	1/10	C, N, R	H, J, K, C, E	B, D	S	P, R	ANG, DAL, IRC
	Resistance	Power	Term.	Char.	Res.	Level 1	Level 2	
Part Number	Value (Ohms)	Rating (W)	Type (^)	(@)	Tol. (%)	(FRL) (&)	(FRL) (&)	Manufacturer
RN^55@16R5%&	16.5	1/10	C, N, R	H, J, K, C, E	B, D, F	S	P, R	ANG, DAL, IRC
RN^55@16R7%&	16.7	1/10	C, N, R	H, J, K, C, E	B, D	S	P, R	ANG, DAL, IRC
RN^55@16R9%&	16.9	1/10	C, N, R	H, J, K, C, E	B, D, F	S	P, R	ANG, DAL, IRC
RN^55@17R2%&	17.2	1/10	C, N, R	H, J, K, C, E	B, D	S	P, R	ANG, DAL, IRC
RN^55@17R4%&	17.4	1/10	C, N, R	H, J, K, C, E	B, D, F	S	P, R	ANG, DAL, IRC
RN^55@17R6%&	17.6	1/10	C, N, R	H, J, K, C, E	B, D	S	P, R	ANG, DAL, IRC
RN^55@17R8%&	17.8	1/10	C, N, R	H, J, K, C, E	B, D, F	S	P, R	ANG, DAL, IRC
	Resistance	Power	Term.	Char.	Res.	Level 1	Level 2	
Part Number	Value (Ohms)	Rating (W)	Type (^)	(@)	Tol. (%)	(FRL) (&)	(FRL) (&)	Manufacturer
RN^55@18R0%&	18.0	1/10	C, N, R	H, J, K, C, E	B, D	S	P, R	ANG, DAL, IRC
RN^55@18R2%&	18.2	1/10	C, N, R	H, J, K, C, E	B, D, F	S	P, R	ANG, DAL, IRC
RN^55@18R4%&	18.4	1/10	C, N, R	H, J, K, C, E	B, D	S	P, R	ANG, DAL, IRC
RN^55@18R7%&	18.7	1/10	C, N, R	H, J, K, C, E	B, D, F	S	P, R	ANG, DAL, IRC
RN^55@18R9%&	18.9	1/10	C, N, R	H, J, K, C, E	B, D	S	P, R	ANG, DAL, IRC
RN^55@19R1%&	19.1	1/10	C, N, R	H, J, K, C, E	B, D, F	S	P, R	ANG, DAL, IRC
RN^55@19R3%&	19.3	1/10	C, N, R	H, J, K, C, E	B, D	S	P, R	ANG, DAL, IRC
	Resistance	Power	Term.	Char.	Res.	Level 1	Level 2	
Part Number	Value (Ohms)	Rating (W)	Type (^)	(@)	Tol. (%)	(FRL) (&)	(FRL) (&)	Manufacturer
RN^55@19R6%&	19.6	1/10	C, N, R	H, J, K, C, E	B, D, F	S	P, R	ANG, DAL, IRC
RN^55@19R8%&	19.8	1/10	C, N, R	H, J, K, C, E	B, D	S	P, R	ANG, DAL, IRC
RN^55@20R0%&	20.0	1/10	C, N, R	H, J, K, C, E	B, D, F	S	P, R	ANG, DAL, IRC
RN^55@20R3%&	20.3	1/10	C, N, R	H, J, K, C, E	B, D	S	P, R	ANG, DAL, IRC
RN^55@20R5%&	20.5	1/10	C, N, R	H, J, K, C, E	B, D, F	S	P, R	ANG, DAL, IRC
RN^55@20R8%&	20.8	1/10	C, N, R	H, J, K, C, E	B, D	S	P, R	ANG, DAL, IRC
RN^55@21R0%&	21.0	1/10	C, N, R	H, J, K, C, E	B, D, F	S	P, R	ANG, DAL, IRC
	Resistance	Power	Term.	Char.	Res.	Level 1	Level 2	
Part Number	Value (Ohms)	Rating (W)	Type (^)	(@)	Tol. (%)	(FRL) (&)	(FRL) (&)	Manufacturer
RN^55@21R3%&	21.3	1/10	C, N, R	H, J, K, C, E	B, D	S	P, R	ANG, DAL, IRC
RN^55@21R5%&	21.5	1/10	C, N, R	H, J, K, C, E	B, D, F	S	P, R	ANG, DAL, IRC
RN^55@21R8%&	21.8	1/10	C, N, R	H, J, K, C, E	B, D	S	P, R	ANG, DAL, IRC
RN^55@22R1%&	22.1	1/10	C, N, R	H, J, K, C, E	B, D, F	S	P, R	ANG, DAL, IRC
RN^55@22R3%&	22.3	1/10	C, N, R	H, J, K, C, E	B, D	S	P, R	ANG, DAL, IRC
RN^55@22R6%&	22.6	1/10	C, N, R	H, J, K, C, E	B, D, F	S	P, R	ANG, DAL, IRC
RN^55@22R9%&	22.9	1/10	C, N, R	H, J, K, C, E	B, D	S	P, R	ANG, DAL, IRC
	Resistance	Power	Term.	Char.	Res.	Level 1	Level 2	
Part Number	Value (Ohms)	Rating (W)	Type (^)	(@)	Tol. (%)	(FRL) (&)	(FRL) (&)	Manufacturer
RN^55@23R2%&	23.2	1/10	C, N, R	H, J, K, C, E	B, D, F	S	P, R	ANG, DAL, IRC
RN^55@23R4%&	23.4	1/10	C, N, R	H, J, K, C, E	B, D	S	P, R	ANG, DAL, IRC
RN^55@23R7%&	23.7	1/10	C, N, R	H, J, K, C, E	B, D, F	S	P, R	ANG, DAL, IRC
RN^55@24R0%&	24.0	1/10	C, N, R	H, J, K, C, E	B, D	S	P, R	ANG, DAL, IRC

RN^55@24R3%&	24.3	1/10	C, N, R	H, J, K, C, E	B, D, F	S	P, R	ANG, DAL, IRC
RN^55@24R6%&	24.6	1/10	C, N, R	H, J, K, C, E	B, D	S	P, R	ANG, DAL, IRC
RN^55@24R9%&	24.9	1/10	C, N, R	H, J, K, C, E	B, D, F	S	P, R	ANG, DAL, IRC
	Resistance	Power	Term.	Char.	Res.	Level 1	Level 2	
Part Number	Value (Ohms)	Rating (W)	Type (^)	(@)	Tol. (%)	(FRL) (&)	(FRL) (&)	Manufacturer
RN^55@25R2%&	25.2	1/10	C, N, R	H, J, K, C, E	B, D	S	P, R	ANG, DAL, IRC
RN^55@25R5%&	25.5	1/10	C, N, R	H, J, K, C, E	B, D, F	S	P, R	ANG, DAL, IRC
RN^55@25R8%&	25.8	1/10	C, N, R	H, J, K, C, E	B, D	S	P, R	ANG, DAL, IRC
RN^55@26R1%&	26.1	1/10	C, N, R	H, J, K, C, E	B, D, F	S	P, R	ANG, DAL, IRC
RN^55@26R4%&	26.4	1/10	C, N, R	H, J, K, C, E	B, D	S	P, R	ANG, DAL, IRC
RN^55@26R7%&	26.7	1/10	C, N, R	H, J, K, C, E	B, D, F	S	P, R	ANG, DAL, IRC
RN^55@27R1%&	27.1	1/10	C, N, R	H, J, K, C, E	B, D	S	P, R	ANG, DAL, IRC
	Resistance	Power	Term.	Char.	Res.	Level 1	Level 2	
Part Number	Value (Ohms)	Rating (W)	Type (^)	(@)	Tol. (%)	(FRL) (&)	(FRL) (&)	Manufacturer
RN^55@27R4%&	27.4	1/10	C, N, R	H, J, K, C, E	B, D, F	S	P, R	ANG, DAL, IRC
RN^55@27R7%&	27.7	1/10	C, N, R	H, J, K, C, E	B, D	S	P, R	ANG, DAL, IRC
RN^55@28R0%&	28.0	1/10	C, N, R	H, J, K, C, E	B, D, F	S	P, R	ANG, DAL, IRC
RN^55@28R4%&	28.4	1/10	C, N, R	H, J, K, C, E	B, D	S	P, R	ANG, DAL, IRC
RN^55@28R7%&	28.7	1/10	C, N, R	H, J, K, C, E	B, D, F	S	P, R	ANG, DAL, IRC
RN^55@29R1%&	29.1	1/10	C, N, R	H, J, K, C, E	B, D	S	P, R	ANG, DAL, IRC
RN^55@29R4%&	29.4	1/10	C, N, R	H, J, K, C, E	B, D, F	S	P, R	ANG, DAL, IRC
	Resistance	Power	Term.	Char.	Res.	Level 1	Level 2	
Part Number	Value (Ohms)	Rating (W)	Type (^)	(@)	Tol. (%)	(FRL) (&)	(FRL) (&)	Manufacturer
RN^55@29R8%&	29.8	1/10	C, N, R	H, J, K, C, E	B, D	S	P, R	ANG, DAL, IRC
RN^55@30R1%&	30.1	1/10	C, N, R	H, J, K, C, E	B, D, F	S	P, R	ANG, DAL, IRC
RN^55@30R5%&	30.5	1/10	C, N, R	H, J, K, C, E	B, D	S	P, R	ANG, DAL, IRC
RN^55@30R9%&	30.9	1/10	C, N, R	H, J, K, C, E	B, D, F	S	P, R	ANG, DAL, IRC
RN^55@31R2%&	31.2	1/10	C, N, R	H, J, K, C, E	B, D	S	P, R	ANG, DAL, IRC
RN^55@31R6%&	31.6	1/10	C, N, R	H, J, K, C, E	B, D, F	S	P, R	ANG, DAL, IRC
RN^55@32R0%&	32.0	1/10	C, N, R	H, J, K, C, E	B, D	S	P, R	ANG, DAL, IRC
	Resistance	Power	Term.	Char.	Res.	Level 1	Level 2	
Part Number	Value (Ohms)	Rating (W)	Type (^)	(@)	Tol. (%)	(FRL) (&)	(FRL) (&)	Manufacturer
RN^55@32R4%&	32.4	1/10	C, N, R	H, J, K, C, E	B, D, F	S	P, R	ANG, DAL, IRC
RN^55@32R8%&	32.8	1/10	C, N, R	H, J, K, C, E	B, D	S	P, R	ANG, DAL, IRC
RN^55@33R2%&	33.2	1/10	C, N, R	H, J, K, C, E	B, D, F	S	P, R	ANG, DAL, IRC
RN^55@33R6%&	33.6	1/10	C, N, R	H, J, K, C, E	B, D	S	P, R	ANG, DAL, IRC
RN^55@34R0%&	34.0	1/10	C, N, R	H, J, K, C, E	B, D, F	S	P, R	ANG, DAL, IRC
RN^55@34R4%&	34.4	1/10	C, N, R	H, J, K, C, E	B, D	S	P, R	ANG, DAL, IRC
RN^55@34R8%&	34.8	1/10	C, N, R	H, J, K, C, E	B, D, F	S	P, R	ANG, DAL, IRC
	Resistance	Power	Term.	Char.	Res.	Level 1	Level 2	
Part Number	Value (Ohms)	Rating (W)	Type (^)	(@)	Tol. (%)	(FRL) (&)	(FRL) (&)	Manufacturer
RN^55@35R2%&	35.2	1/10	C, N, R	H, J, K, C, E	B, D	S	P, R	ANG, DAL, IRC
RN^55@35R7%&	35.7	1/10	C, N, R	H, J, K, C, E	B, D, F	S	P, R	ANG, DAL, IRC
RN^55@36R1%&	36.1	1/10	C, N, R	H, J, K, C, E	B, D	S	P, R	ANG, DAL, IRC
RN^55@36R5%&	36.5	1/10	C, N, R	H, J, K, C, E	B, D, F	S	P, R	ANG, DAL, IRC
RN^55@37R0%&	37.0	1/10	C, N, R	H, J, K, C, E	B, D	S	P, R	ANG, DAL, IRC
RN^55@37R4%&	37.4	1/10	C, N, R	H, J, K, C, E	B, D, F	S	P, R	ANG, DAL, IRC

RN^55@37R9%&	37.9	1/10	C, N, R	H, J, K, C, E	B, D	S	P, R	ANG, DAL, IRC
	Resistance	Power	Term.	Char.	Res.	Level 1	Level 2	
Part Number	Value (Ohms)	Rating (W)	Type (^)	(@)	Tol. (%)	(FRL) (&)	(FRL) (&)	Manufacturer
RN^55@38R3%&	38.3	1/10	C, N, R	H, J, K, C, E	B, D, F	S	P, R	ANG, DAL, IRC
RN^55@38R8%&	38.8	1/10	C, N, R	H, J, K, C, E	B, D	S	P, R	ANG, DAL, IRC
RN^55@39R2%&	39.2	1/10	C, N, R	H, J, K, C, E	B, D, F	S	P, R	ANG, DAL, IRC
RN^55@39R7%&	39.7	1/10	C, N, R	H, J, K, C, E	B, D	S	P, R	ANG, DAL, IRC
RN^55@40R2%&	40.2	1/10	C, N, R	H, J, K, C, E	B, D, F	S	P, R	ANG, DAL, IRC
RN^55@40R7%&	40.7	1/10	C, N, R	H, J, K, C, E	B, D	S	P, R	ANG, DAL, IRC
RN^55@41R2%&	41.2	1/10	C, N, R	H, J, K, C, E	B, D, F	S	P, R	ANG, DAL, IRC
	Resistance	Power	Term.	Char.	Res.	Level 1	Level 2	
Part Number	Value (Ohms)	Rating (W)	Type (^)	(@)	Tol. (%)	(FRL) (&)	(FRL) (&)	Manufacturer
RN^55@41R7%&	41.7	1/10	C, N, R	H, J, K, C, E	B, D	S	P, R	ANG, DAL, IRC
RN^55@42R2%&	42.2	1/10	C, N, R	H, J, K, C, E	B, D, F	S	P, R	ANG, DAL, IRC
RN^55@42R7%&	42.7	1/10	C, N, R	H, J, K, C, E	B, D	S	P, R	ANG, DAL, IRC
RN^55@43R2%&	43.2	1/10	C, N, R	H, J, K, C, E	B, D, F	S	P, R	ANG, DAL, IRC
RN^55@43R7%&	43.7	1/10	C, N, R	H, J, K, C, E	B, D	S	P, R	ANG, DAL, IRC
RN^55@44R2%&	44.2	1/10	C, N, R	H, J, K, C, E	B, D, F	S	P, R	ANG, DAL, IRC
RN^55@44R8%&	44.8	1/10	C, N, R	H, J, K, C, E	B, D	S	P, R	ANG, DAL, IRC
	Resistance	Power	Term.	Char.	Res.	Level 1	Level 2	
Part Number	Value (Ohms)	Rating (W)	Type (^)	(@)	Tol. (%)	(FRL) (&)	(FRL) (&)	Manufacturer
RN^55@45R3%&	45.3	1/10	C, N, R	H, J, K, C, E	B, D, F	S	P, R	ANG, DAL, IRC
RN^55@45R9%&	45.9	1/10	C, N, R	H, J, K, C, E	B, D	S	P, R	ANG, DAL, IRC
RN^55@46R4%&	46.4	1/10	C, N, R	H, J, K, C, E	B, D, F	S	P, R	ANG, DAL, IRC
RN^55@47R0%&	47.0	1/10	C, N, R	H, J, K, C, E	B, D	S	P, R	ANG, DAL, IRC
RN^55@47R5%&	47.5	1/10	C, N, R	H, J, K, C, E	B, D, F	S	P, R	ANG, DAL, IRC
RN^55@48R1%&	48.1	1/10	C, N, R	H, J, K, C, E	B, D	S	P, R	ANG, DAL, IRC
RN^55@48R7%&	48.7	1/10	C, N, R	H, J, K, C, E	B, D, F	S	P, R	ANG, DAL, IRC
	Resistance	Power	Term.	Char.	Res.	Level 1	Level 2	
Part Number	Value (Ohms)	Rating (W)	Type (^)	(@)	Tol. (%)	(FRL) (&)	(FRL) (&)	Manufacturer
RN^55@49R3%&	49.3	1/10	C, N, R	H, J, K, C, E	B, D	S	P, R	ANG, DAL, IRC
RN^55@49R9%&	49.9	1/10	C, N, R	H, J, K, C, E	B, D, F	S	P, R	ANG, DAL, IRC
RN^55@50R5%&	50.5	1/10	C, N, R	H, J, K, C, E	B, D	S	P, R	ANG, DAL, IRC
RN^55@51R1%&	51.1	1/10	C, N, R	H, J, K, C, E	B, D, F	S	P, R	ANG, DAL, IRC
RN^55@51R7%&	51.7	1/10	C, N, R	H, J, K, C, E	B, D	S	P, R	ANG, DAL, IRC
RN^55@52R3%&	52.3	1/10	C, N, R	H, J, K, C, E	B, D, F	S	P, R	ANG, DAL, IRC
RN^55@53R0%&	53.0	1/10	C, N, R	H, J, K, C, E	B, D	S	P, R	ANG, DAL, IRC
	Resistance	Power	Term.	Char.	Res.	Level 1	Level 2	
Part Number	Value (Ohms)	Rating (W)	Type (^)	(@)	Tol. (%)	(FRL) (&)	(FRL) (&)	Manufacturer
RN^55@53R6%&	53.6	1/10	C, N, R	H, J, K, C, E	B, D, F	S	P, R	ANG, DAL, IRC
RN^55@54R2%&	54.2	1/10	C, N, R	H, J, K, C, E	B, D	S	P, R	ANG, DAL, IRC
RN^55@54R9%&	54.9	1/10	C, N, R	H, J, K, C, E	B, D, F	S	P, R	ANG, DAL, IRC
RN^55@55R6%&	55.6	1/10	C, N, R	H, J, K, C, E	B, D	S	P, R	ANG, DAL, IRC
RN^55@56R2%&	56.2	1/10	C, N, R	H, J, K, C, E	B, D, F	S	P, R	ANG, DAL, IRC
RN^55@56R9%&	56.9	1/10	C, N, R	H, J, K, C, E	B, D	S	P, R	ANG, DAL, IRC
RN^55@57R6%&	57.6	1/10	C, N, R	H, J, K, C, E	B, D, F	S	P, R	ANG, DAL, IRC
	Resistance	Power	Term.	Char.	Res.	Level 1	Level 2	

Part Number	Value (Ohms)	Rating (W)	Type (^)	(@)	Tol. (%)	(FRL) (&)	(FRL) (&)	Manufacturer
RN^55@58R3%&	58.3	1/10	C, N, R	H, J, K, C, E	B, D	S	P, R	ANG, DAL, IRC
RN^55@59R0%&	59.0	1/10	C, N, R	H, J, K, C, E	B, D, F	S	P, R	ANG, DAL, IRC
RN^55@59R7%&	59.7	1/10	C, N, R	H, J, K, C, E	B, D	S	P, R	ANG, DAL, IRC
RN^55@60R4%&	60.4	1/10	C, N, R	H, J, K, C, E	B, D, F	S	P, R	ANG, DAL, IRC
RN^55@61R2%&	61.2	1/10	C, N, R	H, J, K, C, E	B, D	S	P, R	ANG, DAL, IRC
RN^55@61R9%&	61.9	1/10	C, N, R	H, J, K, C, E	B, D, F	S	P, R	ANG, DAL, IRC
RN^55@62R6%&	62.6	1/10	C, N, R	H, J, K, C, E	B, D	S	P, R	ANG, DAL, IRC
	Resistance	Power	Term.	Char.	Res.	Level 1	Level 2	
Part Number	Value (Ohms)	Rating (W)	Type (^)	(@)	Tol. (%)	(FRL) (&)	(FRL) (&)	Manufacturer
RN^55@63R4%&	63.4	1/10	C, N, R	H, J, K, C, E	B, D, F	S	P, R	ANG, DAL, IRC
RN^55@64R2%&	64.2	1/10	C, N, R	H, J, K, C, E	B, D	S	P, R	ANG, DAL, IRC
RN^55@64R9%&	64.9	1/10	C, N, R	H, J, K, C, E	B, D, F	S	P, R	ANG, DAL, IRC
RN^55@65R7%&	65.7	1/10	C, N, R	H, J, K, C, E	B, D	S	P, R	ANG, DAL, IRC
RN^55@66R5%&	66.5	1/10	C, N, R	H, J, K, C, E	B, D, F	S	P, R	ANG, DAL, IRC
RN^55@67R3%&	67.3	1/10	C, N, R	H, J, K, C, E	B, D	S	P, R	ANG, DAL, IRC
RN^55@68R1%&	68.1	1/10	C, N, R	H, J, K, C, E	B, D, F	S	P, R	ANG, DAL, IRC
	Resistance	Power	Term.	Char.	Res.	Level 1	Level 2	
Part Number	Value (Ohms)	Rating (W)	Type (^)	(@)	Tol. (%)	(FRL) (&)	(FRL) (&)	Manufacturer
RN^55@69R0%&	69.0	1/10	C, N, R	H, J, K, C, E	B, D	S	P, R	ANG, DAL, IRC
RN^55@69R8%&	69.8	1/10	C, N, R	H, J, K, C, E	B, D, F	S	P, R	ANG, DAL, IRC
RN^55@70R6%&	70.6	1/10	C, N, R	H, J, K, C, E	B, D	S	P, R	ANG, DAL, IRC
RN^55@71R5%&	71.5	1/10	C, N, R	H, J, K, C, E	B, D, F	S	P, R	ANG, DAL, IRC
RN^55@72R3%&	72.3	1/10	C, N, R	H, J, K, C, E	B, D	S	P, R	ANG, DAL, IRC
RN^55@73R2%&	73.2	1/10	C, N, R	H, J, K, C, E	B, D, F	S	P, R	ANG, DAL, IRC
RN^55@74R1%&	74.1	1/10	C, N, R	H, J, K, C, E	B, D	S	P, R	ANG, DAL, IRC
	Resistance	Power	Term.	Char.	Res.	Level 1	Level 2	
Part Number	Value (Ohms)	Rating (W)	Type (^)	(@)	Tol. (%)	(FRL) (&)	(FRL) (&)	Manufacturer
RN^55@75R0%&	75.0	1/10	C, N, R	H, J, K, C, E	B, D, F	S	P, R	ANG, DAL, IRC
RN^55@75R9%&	75.9	1/10	C, N, R	H, J, K, C, E	B, D	S	P, R	ANG, DAL, IRC
RN^55@76R8%&	76.8	1/10	C, N, R	H, J, K, C, E	B, D, F	S	P, R	ANG, DAL, IRC
RN^55@77R7%&	77.7	1/10	C, N, R	H, J, K, C, E	B, D	S	P, R	ANG, DAL, IRC
RN^55@78R7%&	78.7	1/10	C, N, R	H, J, K, C, E	B, D, F	S	P, R	ANG, DAL, IRC
RN^55@79R6%&	79.6	1/10	C, N, R	H, J, K, C, E	B, D	S	P, R	ANG, DAL, IRC
RN^55@80R6%&	80.6	1/10	C, N, R	H, J, K, C, E	B, D, F	S	P, R	ANG, DAL, IRC
	Resistance	Power	Term.	Char.	Res.	Level 1	Level 2	
Part Number	Value (Ohms)	Rating (W)	Type (^)	(@)	Tol. (%)	(FRL) (&)	(FRL) (&)	Manufacturer
RN^55@81R6%&	81.6	1/10	C, N, R	H, J, K, C, E	B, D	S	P, R	ANG, DAL, IRC
RN^55@82R5%&	82.5	1/10	C, N, R	H, J, K, C, E	B, D, F	S	P, R	ANG, DAL, IRC
RN^55@83R5%&	83.5	1/10	C, N, R	H, J, K, C, E	B, D	S	P, R	ANG, DAL, IRC
RN^55@84R5%&	84.5	1/10	C, N, R	H, J, K, C, E	B, D, F	S	P, R	ANG, DAL, IRC
RN^55@85R6%&	85.6	1/10	C, N, R	H, J, K, C, E	B, D	S	P, R	ANG, DAL, IRC
RN^55@86R6%&	86.6	1/10	C, N, R	H, J, K, C, E	B, D, F	S	P, R	ANG, DAL, IRC
RN^55@87R6%&	87.6	1/10	C, N, R	H, J, K, C, E	B, D	S	P, R	ANG, DAL, IRC
	Resistance	Power	Term.	Char.	Res.	Level 1	Level 2	
Part Number	Value (Ohms)	Rating (W)	Type (^)	(@)	Tol. (%)	(FRL) (&)	(FRL) (&)	Manufacturer
RN^55@88R7%&	88.7	1/10	C, N, R	H, J, K, C, E	B, D, F	S	P, R	ANG, DAL, IRC

RN^55@89R8%&	89.8	1/10	C, N, R	H, J, K, C, E	B, D	S	P, R	ANG, DAL, IRC
RN^55@90R9%&	90.9	1/10	C, N, R	H, J, K, C, E	B, D, F	S	P, R	ANG, DAL, IRC
RN^55@92R0%&	92.0	1/10	C, N, R	H, J, K, C, E	B, D	S	P, R	ANG, DAL, IRC
RN^55@93R1%&	93.1	1/10	C, N, R	H, J, K, C, E	B, D, F	S	P, R	ANG, DAL, IRC
RN^55@94R2%&	94.2	1/10	C, N, R	H, J, K, C, E	B, D	S	P, R	ANG, DAL, IRC
RN^55@95R3%&	95.3	1/10	C, N, R	H, J, K, C, E	B, D, F	S	P, R	ANG, DAL, IRC
	Resistance	Power	Term.	Char.	Res.	Level 1	Level 2	
Part Number	Value (Ohms)	Rating (W)	Type (^)	(@)	Tol. (%)	(FRL) (&)	(FRL) (&)	Manufacturer
RN^55@96R5%&	96.5	1/10	C, N, R	H, J, K, C, E	B, D	S	P, R	ANG, DAL, IRC
RN^55@97R6%&	97.6	1/10	C, N, R	H, J, K, C, E	B, D, F	S	P, R	ANG, DAL, IRC
RN^55@98R8%&	98.8	1/10	C, N, R	H, J, K, C, E	B, D	S	P, R	ANG, DAL, IRC

RN^55 Film Resistors: 100 Ohms through 988 Ohms

	Resistance	Power	Term.	Char.	Res.	Level 1	Level 2	
Part Number	Value (Ohms)	Rating (W)	Type (^)	(@)	Tol. (%)	(FRL) (&)	(FRL) (&)	Manufacturer
RN^55@1000%&	100	1/10	C, N, R	H, J, K, C, E	B, D, F	S	P, R	ANG,DAL,IRC
RN^55@1010%&	101	1/10	C, N, R	H, J, K, C, E	B, D	S	P, R	ANG,DAL,IRC
RN^55@1020%&	102	1/10	C, N, R	H, J, K, C, E	B, D, F	S	P, R	ANG,DAL,IRC
RN^55@1040%&	104	1/10	C, N, R	H, J, K, C, E	B, D	S	P, R	ANG,DAL,IRC
RN^55@1050%&	105	1/10	C, N, R	H, J, K, C, E	B, D, F	S	P, R	ANG,DAL,IRC
RN^55@1060%&	106	1/10	C, N, R	H, J, K, C, E	B, D	S	P, R	ANG,DAL,IRC
RN^55@1070%&	107	1/10	C, N, R	H, J, K, C, E	B, D, F	S	P, R	ANG,DAL,IRC
	Resistance	Power	Term.	Char.	Res.	Level 1	Level 2	
Part Number	Value (Ohms)	Rating (W)	Type (^)	(@)	Tol. (%)	(FRL) (&)	(FRL) (&)	Manufacturer
RN^55@1090%&	109	1/10	C, N, R	H, J, K, C, E	B, D	S	P, R	ANG,DAL,IRC
RN^55@1100%&	110	1/10	C, N, R	H, J, K, C, E	B, D, F	S	P, R	ANG,DAL,IRC
RN^55@1110%&	111	1/10	C, N, R	H, J, K, C, E	B, D	S	P, R	ANG,DAL,IRC
RN^55@1130%&	113	1/10	C, N, R	H, J, K, C, E	B, D, F	S	P, R	ANG,DAL,IRC
RN^55@1140%&	114	1/10	C, N, R	H, J, K, C, E	B, D	S	P, R	ANG,DAL,IRC
RN^55@1150%&	115	1/10	C, N, R	H, J, K, C, E	B, D, F	S	P, R	ANG,DAL,IRC
RN^55@1170%&	117	1/10	C, N, R	H, J, K, C, E	B, D	S	P, R	ANG,DAL,IRC
	Resistance	Power	Term.	Char.	Res.	Level 1	Level 2	
Part Number	Value (Ohms)	Rating (W)	Type (^)	(@)	Tol. (%)	(FRL) (&)	(FRL) (&)	Manufacturer
RN^55@1180%&	118	1/10	C, N, R	H, J, K, C, E	B, D, F	S	P, R	ANG,DAL,IRC
RN^55@1200%&	120	1/10	C, N, R	H, J, K, C, E	B, D	S	P, R	ANG,DAL,IRC
RN^55@1210%&	121	1/10	C, N, R	H, J, K, C, E	B, D, F	S	P, R	ANG,DAL,IRC
RN^55@1230%&	123	1/10	C, N, R	H, J, K, C, E	B, D	S	P, R	ANG,DAL,IRC
RN^55@1240%&	124	1/10	C, N, R	H, J, K, C, E	B, D, F	S	P, R	ANG,DAL,IRC
RN^55@1260%&	126	1/10	C, N, R	H, J, K, C, E	B, D	S	P, R	ANG,DAL,IRC
RN^55@1270%&	127	1/10	C, N, R	H, J, K, C, E	B, D, F	S	P, R	ANG,DAL,IRC
	Resistance	Power	Term.	Char.	Res.	Level 1	Level 2	
Part Number	Value (Ohms)	Rating (W)	Type (^)	(@)	Tol. (%)	(FRL) (&)	(FRL) (&)	Manufacturer
RN^55@1290%&	129	1/10	C, N, R	H, J, K, C, E	B, D	S	P, R	ANG,DAL,IRC
RN^55@1300%&	130	1/10	C, N, R	H, J, K, C, E	B, D, F	S	P, R	ANG,DAL,IRC

RN^55@1320%&	132	1/10	C, N, R	H, J, K, C, E	B, D	S	P, R	ANG,DAL,IRC
RN^55@1330%&	133	1/10	C, N, R	H, J, K, C, E	B, D, F	S	P, R	ANG,DAL,IRC
RN^55@1350%&	135	1/10	C, N, R	H, J, K, C, E	B, D	S	P, R	ANG,DAL,IRC
RN^55@1370%&	137	1/10	C, N, R	H, J, K, C, E	B, D, F	S	P, R	ANG,DAL,IRC
RN^55@1380%&	138	1/10	C, N, R	H, J, K, C, E	B, D	S	P, R	ANG,DAL,IRC
	Resistance	Power	Term.	Char.	Res.	Level 1	Level 2	
Part Number	Value (Ohms)	Rating (W)	Type (^)	(@)	Tol. (%)	(FRL) (&)	(FRL) (&)	Manufacturer
RN^55@1400%&	140	1/10	C, N, R	H, J, K, C, E	B, D, F	S	P, R	ANG,DAL,IRC
RN^55@1420%&	142	1/10	C, N, R	H, J, K, C, E	B, D	S	P, R	ANG,DAL,IRC
RN^55@1430%&	143	1/10	C, N, R	H, J, K, C, E	B, D, F	S	P, R	ANG,DAL,IRC
RN^55@1450%&	145	1/10	C, N, R	H, J, K, C, E	B, D	S	P, R	ANG,DAL,IRC
RN^55@1470%&	147	1/10	C, N, R	H, J, K, C, E	B, D, F	S	P, R	ANG,DAL,IRC
RN^55@1490%&	149	1/10	C, N, R	H, J, K, C, E	B, D	S	P, R	ANG,DAL,IRC
RN^55@1500%&	150	1/10	C, N, R	H, J, K, C, E	B, D, F	S	P, R	ANG,DAL,IRC
	Resistance	Power	Term.	Char.	Res.	Level 1	Level 2	
Part Number	Value (Ohms)	Rating (W)	Type (^)	(@)	Tol. (%)	(FRL) (&)	(FRL) (&)	Manufacturer
RN^55@1520%&	152	1/10	C, N, R	H, J, K, C, E	B, D	S	P, R	ANG,DAL,IRC
RN^55@1540%&	154	1/10	C, N, R	H, J, K, C, E	B, D, F	S	P, R	ANG,DAL,IRC
RN^55@1560%&	156	1/10	C, N, R	H, J, K, C, E	B, D	S	P, R	ANG,DAL,IRC
RN^55@1580%&	158	1/10	C, N, R	H, J, K, C, E	B, D, F	S	P, R	ANG,DAL,IRC
RN^55@1600%&	160	1/10	C, N, R	H, J, K, C, E	B, D	S	P, R	ANG,DAL,IRC
RN^55@1620%&	162	1/10	C, N, R	H, J, K, C, E	B, D, F	S	P, R	ANG,DAL,IRC
RN^55@1640%&	164	1/10	C, N, R	H, J, K, C, E	B, D	S	P, R	ANG,DAL,IRC
	Resistance	Power	Term.	Char.	Res.	Level 1	Level 2	
Part Number	Value (Ohms)	Rating (W)	Type (^)	(@)	Tol. (%)	(FRL) (&)	(FRL) (&)	Manufacturer
RN^55@1650%&	165	1/10	C, N, R	H, J, K, C, E	B, D, F	S	P, R	ANG,DAL,IRC
RN^55@1670%&	167	1/10	C, N, R	H, J, K, C, E	B, D	S	P, R	ANG,DAL,IRC
RN^55@1690%&	169	1/10	C, N, R	H, J, K, C, E	B, D, F	S	P, R	ANG,DAL,IRC
RN^55@1720%&	172	1/10	C, N, R	H, J, K, C, E	B, D	S	P, R	ANG,DAL,IRC
RN^55@1740%&	174	1/10	C, N, R	H, J, K, C, E	B, D, F	S	P, R	ANG,DAL,IRC
RN^55@1760%&	176	1/10	C, N, R	H, J, K, C, E	B, D	S	P, R	ANG,DAL,IRC
RN^55@1780%&	178	1/10	C, N, R	H, J, K, C, E	B, D, F	S	P, R	ANG,DAL,IRC
	Resistance	Power	Term.	Char.	Res.	Level 1	Level 2	
Part Number	Value (Ohms)	Rating (W)	Type (^)	(@)	Tol. (%)	(FRL) (&)	(FRL) (&)	Manufacturer
RN^55@1800%&	180	1/10	C, N, R	H, J, K, C, E	B, D	S	P, R	ANG,DAL,IRC
RN^55@1820%&	182	1/10	C, N, R	H, J, K, C, E	B, D, F	S	P, R	ANG,DAL,IRC
RN^55@1840%&	184	1/10	C, N, R	H, J, K, C, E	B, D	S	P, R	ANG,DAL,IRC
RN^55@1870%&	187	1/10	C, N, R	H, J, K, C, E	B, D, F	S	P, R	ANG,DAL,IRC
RN^55@1890%&	189	1/10	C, N, R	H, J, K, C, E	B, D	S	P, R	ANG,DAL,IRC
RN^55@1910%&	191	1/10	C, N, R	H, J, K, C, E	B, D, F	S	P, R	ANG,DAL,IRC
RN^55@1930%&	193	1/10	C, N, R	H, J, K, C, E	B, D	S	P, R	ANG,DAL,IRC
	Resistance	Power	Term.	Char.	Res.	Level 1	Level 2	
Part Number	Value (Ohms)	Rating (W)	Type (^)	(@)	Tol. (%)	(FRL) (&)	(FRL) (&)	Manufacturer
RN^55@1960%&	196	1/10	C, N, R	H, J, K, C, E	B, D, F	S	P, R	ANG,DAL,IRC
RN^55@1980%&	198	1/10	C, N, R	H, J, K, C, E	B, D	S	P, R	ANG,DAL,IRC
RN^55@2000%&	200	1/10	C, N, R	H, J, K, C, E	B, D, F	S	P, R	ANG,DAL,IRC
RN^55@2030%&	203	1/10	C, N, R	H, J, K, C, E	B, D	S	P, R	ANG,DAL,IRC

RN^55@2050%&	205	1/10	C, N, R	H, J, K, C, E	B, D, F	S	P, R	ANG,DAL,IRC
RN^55@2080%&	208	1/10	C, N, R	H, J, K, C, E	B, D	S	P, R	ANG,DAL,IRC
RN^55@2100%&	210	1/10	C, N, R	H, J, K, C, E	B, D, F	S	P, R	ANG,DAL,IRC
	Resistance	Power	Term.	Char.	Res.	Level 1	Level 2	
Part Number	Value (Ohms)	Rating (W)	Type (^)	(@)	Tol. (%)	(FRL) (&)	(FRL) (&)	Manufacturer
RN^55@2130%&	213	1/10	C, N, R	H, J, K, C, E	B, D	S	P, R	ANG,DAL,IRC
RN^55@2150%&	215	1/10	C, N, R	H, J, K, C, E	B, D, F	S	P, R	ANG,DAL,IRC
RN^55@2180%&	218	1/10	C, N, R	H, J, K, C, E	B, D	S	P, R	ANG,DAL,IRC
RN^55@2210%&	221	1/10	C, N, R	H, J, K, C, E	B, D, F	S	P, R	ANG,DAL,IRC
RN^55@2230%&	223	1/10	C, N, R	H, J, K, C, E	B, D	S	P, R	ANG,DAL,IRC
RN^55@2260%&	226	1/10	C, N, R	H, J, K, C, E	B, D, F	S	P, R	ANG,DAL,IRC
RN^55@2290%&	229	1/10	C, N, R	H, J, K, C, E	B, D	S	P, R	ANG,DAL,IRC
	Resistance	Power	Term.	Char.	Res.	Level 1	Level 2	
Part Number	Value (Ohms)	Rating (W)	Type (^)	(@)	Tol. (%)	(FRL) (&)	(FRL) (&)	Manufacturer
RN^55@2320%&	232	1/10	C, N, R	H, J, K, C, E	B, D, F	S	P, R	ANG,DAL,IRC
RN^55@2340%&	234	1/10	C, N, R	H, J, K, C, E	B, D	S	P, R	ANG,DAL,IRC
RN^55@2370%&	237	1/10	C, N, R	H, J, K, C, E	B, D, F	S	P, R	ANG,DAL,IRC
RN^55@2400%&	240	1/10	C, N, R	H, J, K, C, E	B, D	S	P, R	ANG,DAL,IRC
RN^55@2430%&	243	1/10	C, N, R	H, J, K, C, E	B, D, F	S	P, R	ANG,DAL,IRC
RN^55@2460%&	246	1/10	C, N, R	H, J, K, C, E	B, D	S	P, R	ANG,DAL,IRC
RN^55@2490%&	249	1/10	C, N, R	H, J, K, C, E	B, D, F	S	P, R	ANG,DAL,IRC
	Resistance	Power	Term.	Char.	Res.	Level 1	Level 2	
Part Number	Value (Ohms)	Rating (W)	Type (^)	(@)	Tol. (%)	(FRL) (&)	(FRL) (&)	Manufacturer
RN^55@2520%&	252	1/10	C, N, R	H, J, K, C, E	B, D	S	P, R	ANG,DAL,IRC
RN^55@2550%&	255	1/10	C, N, R	H, J, K, C, E	B, D, F	S	P, R	ANG,DAL,IRC
RN^55@2580%&	258	1/10	C, N, R	H, J, K, C, E	B, D	S	P, R	ANG,DAL,IRC
RN^55@2610%&	261	1/10	C, N, R	H, J, K, C, E	B, D, F	S	P, R	ANG,DAL,IRC
RN^55@2640%&	264	1/10	C, N, R	H, J, K, C, E	B, D	S	P, R	ANG,DAL,IRC
RN^55@2670%&	267	1/10	C, N, R	H, J, K, C, E	B, D, F	S	P, R	ANG,DAL,IRC
RN^55@2710%&	271	1/10	C, N, R	H, J, K, C, E	B, D	S	P, R	ANG,DAL,IRC
	Resistance	Power	Term.	Char.	Res.	Level 1	Level 2	
Part Number	Value (Ohms)	Rating (W)	Type (^)	(@)	Tol. (%)	(FRL) (&)	(FRL) (&)	Manufacturer
RN^55@2740%&	274	1/10	C, N, R	H, J, K, C, E	B, D, F	S	P, R	ANG,DAL,IRC
RN^55@2770%&	277	1/10	C, N, R	H, J, K, C, E	B, D	S	P, R	ANG,DAL,IRC
RN^55@2800%&	280	1/10	C, N, R	H, J, K, C, E	B, D, F	S	P, R	ANG,DAL,IRC
RN^55@2840%&	284	1/10	C, N, R	H, J, K, C, E	B, D	S	P, R	ANG,DAL,IRC
RN^55@2870%&	287	1/10	C, N, R	H, J, K, C, E	B, D, F	S	P, R	ANG,DAL,IRC
RN^55@2910%&	291	1/10	C, N, R	H, J, K, C, E	B, D	S	P, R	ANG,DAL,IRC
RN^55@2940%&	294	1/10	C, N, R	H, J, K, C, E	B, D, F	S	P, R	ANG,DAL,IRC
	Resistance	Power	Term.	Char.	Res.	Level 1	Level 2	
Part Number	Value (Ohms)	Rating (W)	Type (^)	(@)	Tol. (%)	(FRL) (&)	(FRL) (&)	Manufacturer
RN^55@2980%&	298	1/10	C, N, R	H, J, K, C, E	B, D	S	P, R	ANG,DAL,IRC
RN^55@3010%&	301	1/10	C, N, R	H, J, K, C, E	B, D, F	S	P, R	ANG,DAL,IRC
RN^55@3050%&	305	1/10	C, N, R	H, J, K, C, E	B, D	S	P, R	ANG,DAL,IRC
RN^55@3090%&	309	1/10	C, N, R	H, J, K, C, E	B, D, F	S	P, R	ANG,DAL,IRC
RN^55@3120%&	312	1/10	C, N, R	H, J, K, C, E	B, D	S	P, R	ANG,DAL,IRC
RN^55@3160%&	316	1/10	C, N, R	H, J, K, C, E	B, D, F	S	P, R	ANG,DAL,IRC

RN^55@3200%&	320	1/10	C, N, R	H, J, K, C, E	B, D	S	P, R	ANG,DAL,IRC
	Resistance	Power	Term.	Char.	Res.	Level 1	Level 2	
Part Number	Value (Ohms)	Rating (W)	Type (^)	(@)	Tol. (%)	(FRL) (&)	(FRL) (&)	Manufacturer
RN^55@3240%&	324	1/10	C, N, R	H, J, K, C, E	B, D, F	S	P, R	ANG,DAL,IRC
RN^55@3280%&	328	1/10	C, N, R	H, J, K, C, E	B, D	S	P, R	ANG,DAL,IRC
RN^55@3320%&	332	1/10	C, N, R	H, J, K, C, E	B, D, F	S	P, R	ANG,DAL,IRC
RN^55@3360%&	336	1/10	C, N, R	H, J, K, C, E	B, D	S	P, R	ANG,DAL,IRC
RN^55@3400%&	340	1/10	C, N, R	H, J, K, C, E	B, D, F	S	P, R	ANG,DAL,IRC
RN^55@3440%&	344	1/10	C, N, R	H, J, K, C, E	B, D	S	P, R	ANG,DAL,IRC
RN^55@3480%&	348	1/10	C, N, R	H, J, K, C, E	B, D, F	S	P, R	ANG,DAL,IRC
	Resistance	Power	Term.	Char.	Res.	Level 1	Level 2	
Part Number	Value (Ohms)	Rating (W)	Type (^)	(@)	Tol. (%)	(FRL) (&)	(FRL) (&)	Manufacturer
RN^55@3520%&	352	1/10	C, N, R	H, J, K, C, E	B, D	S	P, R	ANG,DAL,IRC
RN^55@3570%&	357	1/10	C, N, R	H, J, K, C, E	B, D, F	S	P, R	ANG,DAL,IRC
RN^55@3610%&	361	1/10	C, N, R	H, J, K, C, E	B, D	S	P, R	ANG,DAL,IRC
RN^55@3650%&	365	1/10	C, N, R	H, J, K, C, E	B, D, F	S	P, R	ANG,DAL,IRC
RN^55@3700%&	370	1/10	C, N, R	H, J, K, C, E	B, D	S	P, R	ANG,DAL,IRC
RN^55@3740%&	374	1/10	C, N, R	H, J, K, C, E	B, D, F	S	P, R	ANG,DAL,IRC
RN^55@3790%&	379	1/10	C, N, R	H, J, K, C, E	B, D	S	P, R	ANG,DAL,IRC
	Resistance	Power	Term.	Char.	Res.	Level 1	Level 2	
Part Number	Value (Ohms)	Rating (W)	Type (^)	(@)	Tol. (%)	(FRL) (&)	(FRL) (&)	Manufacturer
RN^55@3830%&	383	1/10	C, N, R	H, J, K, C, E	B, D, F	S	P, R	ANG,DAL,IRC
RN^55@3880%&	388	1/10	C, N, R	H, J, K, C, E	B, D	S	P, R	ANG,DAL,IRC
RN^55@3920%&	392	1/10	C, N, R	H, J, K, C, E	B, D, F	S	P, R	ANG,DAL,IRC
RN^55@3970%&	397	1/10	C, N, R	H, J, K, C, E	B, D	S	P, R	ANG,DAL,IRC
RN^55@4020%&	402	1/10	C, N, R	H, J, K, C, E	B, D, F	S	P, R	ANG,DAL,IRC
RN^55@4070%&	407	1/10	C, N, R	H, J, K, C, E	B, D	S	P, R	ANG,DAL,IRC
RN^55@4120%&	412	1/10	C, N, R	H, J, K, C, E	B, D, F	S	P, R	ANG,DAL,IRC
	Resistance	Power	Term.	Char.	Res.	Level 1	Level 2	
Part Number	Value (Ohms)	Rating (W)	Type (^)	(@)	Tol. (%)	(FRL) (&)	(FRL) (&)	Manufacturer
RN^55@4170%&	417	1/10	C, N, R	H, J, K, C, E	B, D	S	P, R	ANG,DAL,IRC
RN^55@4220%&	422	1/10	C, N, R	H, J, K, C, E	B, D, F	S	P, R	ANG,DAL,IRC
RN^55@4270%&	427	1/10	C, N, R	H, J, K, C, E	B, D	S	P, R	ANG,DAL,IRC
RN^55@4320%&	432	1/10	C, N, R	H, J, K, C, E	B, D, F	S	P, R	ANG,DAL,IRC
RN^55@4370%&	437	1/10	C, N, R	H, J, K, C, E	B, D	S	P, R	ANG,DAL,IRC
RN^55@4420%&	442	1/10	C, N, R	H, J, K, C, E	B, D, F	S	P, R	ANG,DAL,IRC
RN^55@4480%&	448	1/10	C, N, R	H, J, K, C, E	B, D	S	P, R	ANG,DAL,IRC
	Resistance	Power	Term.	Char.	Res.	Level 1	Level 2	
Part Number	Value (Ohms)	Rating (W)	Type (^)	(@)	Tol. (%)	(FRL) (&)	(FRL) (&)	Manufacturer
RN^55@4530%&	453	1/10	C, N, R	H, J, K, C, E	B, D, F	S	P, R	ANG,DAL,IRC
RN^55@4590%&	459	1/10	C, N, R	H, J, K, C, E	B, D	S	P, R	ANG,DAL,IRC
RN^55@4640%&	464	1/10	C, N, R	H, J, K, C, E	B, D, F	S	P, R	ANG,DAL,IRC
RN^55@4700%&	470	1/10	C, N, R	H, J, K, C, E	B, D	S	P, R	ANG,DAL,IRC
RN^55@4750%&	475	1/10	C, N, R	H, J, K, C, E	B, D, F	S	P, R	ANG,DAL,IRC
RN^55@4810%&	481	1/10	C, N, R	H, J, K, C, E	B, D	S	P, R	ANG,DAL,IRC
RN^55@4870%&	487	1/10	C, N, R	H, J, K, C, E	B, D, F	S	P, R	ANG,DAL,IRC
	Resistance	Power	Term.	Char.	Res.	Level 1	Level 2	

Part Number	Value (Ohms)	Rating (W)	Type (^)	(@)	Tol. (%)	(FRL) (&)	(FRL) (&)	Manufacturer
RN^55@4930%&	493	1/10	C, N, R	H, J, K, C, E	B, D	S	P, R	ANG,DAL,IRC
RN^55@4990%&	499	1/10	C, N, R	H, J, K, C, E	B, D, F	S	P, R	ANG,DAL,IRC
RN^55@5050%&	505	1/10	C, N, R	H, J, K, C, E	B, D	S	P, R	ANG,DAL,IRC
RN^55@5110%&	511	1/10	C, N, R	H, J, K, C, E	B, D, F	S	P, R	ANG,DAL,IRC
RN^55@5170%&	517	1/10	C, N, R	H, J, K, C, E	B, D	S	P, R	ANG,DAL,IRC
RN^55@5230%&	523	1/10	C, N, R	H, J, K, C, E	B, D, F	S	P, R	ANG,DAL,IRC
RN^55@5300%&	530	1/10	C, N, R	H, J, K, C, E	B, D	S	P, R	ANG,DAL,IRC
	Resistance	Power	Term.	Char.	Res.	Level 1	Level 2	
Part Number	Value (Ohms)	Rating (W)	Type (^)	(@)	Tol. (%)	(FRL) (&)	(FRL) (&)	Manufacturer
RN^55@5360%&	536	1/10	C, N, R	H, J, K, C, E	B, D, F	S	P, R	ANG,DAL,IRC
RN^55@5420%&	542	1/10	C, N, R	H, J, K, C, E	B, D	S	P, R	ANG,DAL,IRC
RN^55@5490%&	549	1/10	C, N, R	H, J, K, C, E	B, D, F	S	P, R	ANG,DAL,IRC
RN^55@5560%&	556	1/10	C, N, R	H, J, K, C, E	B, D	S	P, R	ANG,DAL,IRC
RN^55@5620%&	562	1/10	C, N, R	H, J, K, C, E	B, D, F	S	P, R	ANG,DAL,IRC
RN^55@5690%&	569	1/10	C, N, R	H, J, K, C, E	B, D	S	P, R	ANG,DAL,IRC
RN^55@5760%&	576	1/10	C, N, R	H, J, K, C, E	B, D, F	S	P, R	ANG,DAL,IRC
	Resistance	Power	Term.	Char.	Res.	Level 1	Level 2	
Part Number	Value (Ohms)	Rating (W)	Type (^)	(@)	Tol. (%)	(FRL) (&)	(FRL) (&)	Manufacturer
RN^55@5830%&	583	1/10	C, N, R	H, J, K, C, E	B, D	S	P, R	ANG,DAL,IRC
RN^55@5900%&	590	1/10	C, N, R	H, J, K, C, E	B, D, F	S	P, R	ANG,DAL,IRC
RN^55@5970%&	597	1/10	C, N, R	H, J, K, C, E	B, D	S	P, R	ANG,DAL,IRC
RN^55@6040%&	604	1/10	C, N, R	H, J, K, C, E	B, D, F	S	P, R	ANG,DAL,IRC
RN^55@6120%&	612	1/10	C, N, R	H, J, K, C, E	B, D	S	P, R	ANG,DAL,IRC
RN^55@6190%&	619	1/10	C, N, R	H, J, K, C, E	B, D, F	S	P, R	ANG,DAL,IRC
RN^55@6260%&	626	1/10	C, N, R	H, J, K, C, E	B, D	S	P, R	ANG,DAL,IRC
	Resistance	Power	Term.	Char.	Res.	Level 1	Level 2	
Part Number	Value (Ohms)	Rating (W)	Type (^)	(@)	Tol. (%)	(FRL) (&)	(FRL) (&)	Manufacturer
RN^55@6340%&	634	1/10	C, N, R	H, J, K, C, E	B, D, F	S	P, R	ANG,DAL,IRC
RN^55@6420%&	642	1/10	C, N, R	H, J, K, C, E	B, D	S	P, R	ANG,DAL,IRC
RN^55@6490%&	649	1/10	C, N, R	H, J, K, C, E	B, D, F	S	P, R	ANG,DAL,IRC
RN^55@6570%&	657	1/10	C, N, R	H, J, K, C, E	B, D	S	P, R	ANG,DAL,IRC
RN^55@6650%&	665	1/10	C, N, R	H, J, K, C, E	B, D, F	S	P, R	ANG,DAL,IRC
RN^55@6730%&	673	1/10	C, N, R	H, J, K, C, E	B, D	S	P, R	ANG,DAL,IRC
RN^55@6810%&	681	1/10	C, N, R	H, J, K, C, E	B, D, F	S	P, R	ANG,DAL,IRC
	Resistance	Power	Term.	Char.	Res.	Level 1	Level 2	
Part Number	Value (Ohms)	Rating (W)	Type (^)	(@)	Tol. (%)	(FRL) (&)	(FRL) (&)	Manufacturer
RN^55@6900%&	690	1/10	C, N, R	H, J, K, C, E	B, D	S	P, R	ANG,DAL,IRC
RN^55@6980%&	698	1/10	C, N, R	H, J, K, C, E	B, D, F	S	P, R	ANG,DAL,IRC
RN^55@7060%&	706	1/10	C, N, R	H, J, K, C, E	B, D	S	P, R	ANG,DAL,IRC
RN^55@7150%&	715	1/10	C, N, R	H, J, K, C, E	B, D, F	S	P, R	ANG,DAL,IRC
RN^55@7230%&	723	1/10	C, N, R	H, J, K, C, E	B, D	S	P, R	ANG,DAL,IRC
RN^55@7320%&	732	1/10	C, N, R	H, J, K, C, E	B, D, F	S	P, R	ANG,DAL,IRC
RN^55@7410%&	741	1/10	C, N, R	H, J, K, C, E	B, D	S	P, R	ANG,DAL,IRC
	Resistance	Power	Term.	Char.	Res.	Level 1	Level 2	
Part Number	Value (Ohms)	Rating (W)	Type (^)	(@)	Tol. (%)	(FRL) (&)	(FRL) (&)	Manufacturer
RN^55@7500%&	750	1/10	C, N, R	H, J, K, C, E	B, D, F	S	P, R	ANG,DAL,IRC

RN^55@7590%&	759	1/10	C, N, R	H, J, K, C, E	B, D	S	P, R	ANG,DAL,IRC
RN^55@7680%&	768	1/10	C, N, R	H, J, K, C, E	B, D, F	S	P, R	ANG,DAL,IRC
RN^55@7770%&	777	1/10	C, N, R	H, J, K, C, E	B, D	S	P, R	ANG,DAL,IRC
RN^55@7870%&	787	1/10	C, N, R	H, J, K, C, E	B, D, F	S	P, R	ANG,DAL,IRC
RN^55@7960%&	796	1/10	C, N, R	H, J, K, C, E	B, D	S	P, R	ANG,DAL,IRC
RN^55@8060%&	806	1/10	C, N, R	H, J, K, C, E	B, D, F	S	P, R	ANG,DAL,IRC
	Resistance	Power	Term.	Char.	Res.	Level 1	Level 2	
Part Number	Value (Ohms)	Rating (W)	Type (^)	(@)	Tol. (%)	(FRL) (&)	(FRL) (&)	Manufacturer
RN^55@8160%&	816	1/10	C, N, R	H, J, K, C, E	B, D	S	P, R	ANG,DAL,IRC
RN^55@8250%&	825	1/10	C, N, R	H, J, K, C, E	B, D, F	S	P, R	ANG,DAL,IRC
RN^55@8350%&	835	1/10	C, N, R	H, J, K, C, E	B, D	S	P, R	ANG,DAL,IRC
RN^55@8450%&	845	1/10	C, N, R	H, J, K, C, E	B, D, F	S	P, R	ANG,DAL,IRC
RN^55@8560%&	856	1/10	C, N, R	H, J, K, C, E	B, D	S	P, R	ANG,DAL,IRC
RN^55@8660%&	866	1/10	C, N, R	H, J, K, C, E	B, D, F	S	P, R	ANG,DAL,IRC
RN^55@8760%&	876	1/10	C, N, R	H, J, K, C, E	B, D	S	P, R	ANG,DAL,IRC
	Resistance	Power	Term.	Char.	Res.	Level 1	Level 2	
Part Number	Value (Ohms)	Rating (W)	Type (^)	(@)	Tol. (%)	(FRL) (&)	(FRL) (&)	Manufacturer
RN^55@8870%&	887	1/10	C, N, R	H, J, K, C, E	B, D, F	S	P, R	ANG,DAL,IRC
RN^55@8980%&	898	1/10	C, N, R	H, J, K, C, E	B, D	S	P, R	ANG,DAL,IRC
RN^55@9090%&	909	1/10	C, N, R	H, J, K, C, E	B, D, F	S	P, R	ANG,DAL,IRC
RN^55@9200%&	920	1/10	C, N, R	H, J, K, C, E	B, D	S	P, R	ANG,DAL,IRC
RN^55@9310%&	931	1/10	C, N, R	H, J, K, C, E	B, D, F	S	P, R	ANG,DAL,IRC
RN^55@9420%&	942	1/10	C, N, R	H, J, K, C, E	B, D	S	P, R	ANG,DAL,IRC
RN^55@9530%&	953	1/10	C, N, R	H, J, K, C, E	B, D, F	S	P, R	ANG,DAL,IRC
	Resistance	Power	Term.	Char.	Res.	Level 1	Level 2	
Part Number	Value (Ohms)	Rating (W)	Type (^)	(@)	Tol. (%)	(FRL) (&)	(FRL) (&)	Manufacturer
RN^55@9650%&	965	1/10	C, N, R	H, J, K, C, E	B, D	S	P, R	ANG,DAL,IRC
RN^55@9760%&	976	1/10	C, N, R	H, J, K, C, E	B, D, F	S	P, R	ANG,DAL,IRC
RN^55@9880%&	988	1/10	C, N, R	H, J, K, C, E	B, D	S	P, R	ANG,DAL,IRC

RN^55 Film Resistors: 1,000 Ohms through 9,880 Ohms

	Resistance	Power	Term.	Char.	Res.	Level 1	Level 2	
Part Number	Value (Ohms)	Rating (W)	Type (^)	(@)	Tol. (%)	(FRL) (&)	(FRL) (&)	Manufacturer
RN^55@1001%&	1,000	1/10	C, N, R	H, J, K, C, E	B, D, F	S	P, R	ANG,DAL,IRC
RN^55@1011%&	1,010	1/10	C, N, R	H, J, K, C, E	B, D	S	P, R	ANG,DAL,IRC
RN^55@1021%&	1,020	1/10	C, N, R	H, J, K, C, E	B, D, F	S	P, R	ANG,DAL,IRC
RN^55@1041%&	1,040	1/10	C, N, R	H, J, K, C, E	B, D	S	P, R	ANG,DAL,IRC
RN^55@1051%&	1,050	1/10	C, N, R	H, J, K, C, E	B, D, F	S	P, R	ANG,DAL,IRC
RN^55@1061%&	1,060	1/10	C, N, R	H, J, K, C, E	B, D	S	P, R	ANG,DAL,IRC
RN^55@1071%&	1,070	1/10	C, N, R	H, J, K, C, E	B, D, F	S	P, R	ANG,DAL,IRC
	Resistance	Power	Term.	Char.	Res.	Level 1	Level 2	
Part Number	Value (Ohms)	Rating (W)	Type (^)	(@)	Tol. (%)	(FRL) (&)	(FRL) (&)	Manufacturer
RN^55@1091%&	1,090	1/10	C, N, R	H, J, K, C, E	B, D	S	P, R	ANG,DAL,IRC
RN^55@1101%&	1,100	1/10	C, N, R	H, J, K, C, E	B, D, F	S	P, R	ANG,DAL,IRC

RN^55@1111%&	1,110	1/10	C, N, R	H, J, K, C, E	B, D	S	P, R	ANG,DAL,IRC
RN^55@1131%&	1,130	1/10	C, N, R	H, J, K, C, E	B, D, F	S	P, R	ANG,DAL,IRC
RN^55@1141%&	1,140	1/10	C, N, R	H, J, K, C, E	B, D	S	P, R	ANG,DAL,IRC
RN^55@1151%&	1,150	1/10	C, N, R	H, J, K, C, E	B, D, F	S	P, R	ANG,DAL,IRC
RN^55@1171%&	1,170	1/10	C, N, R	H, J, K, C, E	B, D	S	P, R	ANG,DAL,IRC
	Resistance	Power	Term.	Char.	Res.	Level 1	Level 2	
Part Number	Value (Ohms)	Rating (W)	Type (^)	(@)	Tol. (%)	(FRL) (&)	(FRL) (&)	Manufacturer
RN^55@1181%&	1,180	1/10	C, N, R	H, J, K, C, E	B, D, F	S	P, R	ANG,DAL,IRC
RN^55@1201%&	1,200	1/10	C, N, R	H, J, K, C, E	B, D	S	P, R	ANG,DAL,IRC
RN^55@1211%&	1,210	1/10	C, N, R	H, J, K, C, E	B, D, F	S	P, R	ANG,DAL,IRC
RN^55@1231%&	1,230	1/10	C, N, R	H, J, K, C, E	B, D	S	P, R	ANG,DAL,IRC
RN^55@1241%&	1,240	1/10	C, N, R	H, J, K, C, E	B, D, F	S	P, R	ANG,DAL,IRC
RN^55@1261%&	1,260	1/10	C, N, R	H, J, K, C, E	B, D	S	P, R	ANG,DAL,IRC
RN^55@1271%&	1,270	1/10	C, N, R	H, J, K, C, E	B, D, F	S	P, R	ANG,DAL,IRC
	Resistance	Power	Term.	Char.	Res.	Level 1	Level 2	
Part Number	Value (Ohms)	Rating (W)	Type (^)	(@)	Tol. (%)	(FRL) (&)	(FRL) (&)	Manufacturer
RN^55@1291%&	1,290	1/10	C, N, R	H, J, K, C, E	B, D	S	P, R	ANG,DAL,IRC
RN^55@1301%&	1,300	1/10	C, N, R	H, J, K, C, E	B, D, F	S	P, R	ANG,DAL,IRC
RN^55@1321%&	1,320	1/10	C, N, R	H, J, K, C, E	B, D	S	P, R	ANG,DAL,IRC
RN^55@1331%&	1,330	1/10	C, N, R	H, J, K, C, E	B, D, F	S	P, R	ANG,DAL,IRC
RN^55@1351%&	1,350	1/10	C, N, R	H, J, K, C, E	B, D	S	P, R	ANG,DAL,IRC
RN^55@1371%&	1,370	1/10	C, N, R	H, J, K, C, E	B, D, F	S	P, R	ANG,DAL,IRC
RN^55@1381%&	1,380	1/10	C, N, R	H, J, K, C, E	B, D	S	P, R	ANG,DAL,IRC
	Resistance	Power	Term.	Char.	Res.	Level 1	Level 2	
Part Number	Value (Ohms)	Rating (W)	Type (^)	(@)	Tol. (%)	(FRL) (&)	(FRL) (&)	Manufacturer
RN^55@1401%&	1,400	1/10	C, N, R	H, J, K, C, E	B, D, F	S	P, R	ANG,DAL,IRC
RN^55@1421%&	1,420	1/10	C, N, R	H, J, K, C, E	B, D	S	P, R	ANG,DAL,IRC
RN^55@1431%&	1,430	1/10	C, N, R	H, J, K, C, E	B, D, F	S	P, R	ANG,DAL,IRC
RN^55@1451%&	1,450	1/10	C, N, R	H, J, K, C, E	B, D	S	P, R	ANG,DAL,IRC
RN^55@1471%&	1,470	1/10	C, N, R	H, J, K, C, E	B, D, F	S	P, R	ANG,DAL,IRC
RN^55@1491%&	1,490	1/10	C, N, R	H, J, K, C, E	B, D	S	P, R	ANG,DAL,IRC
RN^55@1501%&	1,500	1/10	C, N, R	H, J, K, C, E	B, D, F	S	P, R	ANG,DAL,IRC
	Resistance	Power	Term.	Char.	Res.	Level 1	Level 2	
Part Number	Value (Ohms)	Rating (W)	Type (^)	(@)	Tol. (%)	(FRL) (&)	(FRL) (&)	Manufacturer
RN^55@1521%&	1,520	1/10	C, N, R	H, J, K, C, E	B, D	S	P, R	ANG,DAL,IRC
RN^55@1541%&	1,540	1/10	C, N, R	H, J, K, C, E	B, D, F	S	P, R	ANG,DAL,IRC
RN^55@1561%&	1,560	1/10	C, N, R	H, J, K, C, E	B, D	S	P, R	ANG,DAL,IRC
RN^55@1581%&	1,580	1/10	C, N, R	H, J, K, C, E	B, D, F	S	P, R	ANG,DAL,IRC
RN^55@1601%&	1,600	1/10	C, N, R	H, J, K, C, E	B, D	S	P, R	ANG,DAL,IRC
RN^55@1621%&	1,620	1/10	C, N, R	H, J, K, C, E	B, D, F	S	P, R	ANG,DAL,IRC
RN^55@1641%&	1,640	1/10	C, N, R	H, J, K, C, E	B, D	S	P, R	ANG,DAL,IRC
	Resistance	Power	Term.	Char.	Res.	Level 1	Level 2	
Part Number	Value (Ohms)	Rating (W)	Type (^)	(@)	Tol. (%)	(FRL) (&)	(FRL) (&)	Manufacturer
RN^55@1651%&	1,650	1/10	C, N, R	H, J, K, C, E	B, D, F	S	P, R	ANG,DAL,IRC
RN^55@1671%&	1,670	1/10	C, N, R	H, J, K, C, E	B, D	S	P, R	ANG,DAL,IRC
RN^55@1691%&	1,690	1/10	C, N, R	H, J, K, C, E	B, D, F	S	P, R	ANG,DAL,IRC
RN^55@1721%&	1,720	1/10	C, N, R	H, J, K, C, E	B, D	S	P, R	ANG,DAL,IRC

RN^55@1741%&	1,740	1/10	C, N, R	H, J, K, C, E	B, D, F	S	P, R	ANG,DAL,IRC
RN^55@1761%&	1,760	1/10	C, N, R	H, J, K, C, E	B, D	S	P, R	ANG,DAL,IRC
RN^55@1781%&	1,780	1/10	C, N, R	H, J, K, C, E	B, D, F	S	P, R	ANG,DAL,IRC
	Resistance	Power	Term.	Char.	Res.	Level 1	Level 2	
Part Number	Value (Ohms)	Rating (W)	Type (^)	(@)	Tol. (%)	(FRL) (&)	(FRL) (&)	Manufacturer
RN^55@1801%&	1,800	1/10	C, N, R	H, J, K, C, E	B, D	S	P, R	ANG,DAL,IRC
RN^55@1821%&	1,820	1/10	C, N, R	H, J, K, C, E	B, D, F	S	P, R	ANG,DAL,IRC
RN^55@1841%&	1,840	1/10	C, N, R	H, J, K, C, E	B, D	S	P, R	ANG,DAL,IRC
RN^55@1871%&	1,870	1/10	C, N, R	H, J, K, C, E	B, D, F	S	P, R	ANG,DAL,IRC
RN^55@1891%&	1,890	1/10	C, N, R	H, J, K, C, E	B, D	S	P, R	ANG,DAL,IRC
RN^55@1911%&	1,910	1/10	C, N, R	H, J, K, C, E	B, D, F	S	P, R	ANG,DAL,IRC
RN^55@1931%&	1,930	1/10	C, N, R	H, J, K, C, E	B, D	S	P, R	ANG,DAL,IRC
	Resistance	Power	Term.	Char.	Res.	Level 1	Level 2	
Part Number	Value (Ohms)	Rating (W)	Type (^)	(@)	Tol. (%)	(FRL) (&)	(FRL) (&)	Manufacturer
RN^55@1961%&	1,960	1/10	C, N, R	H, J, K, C, E	B, D, F	S	P, R	ANG,DAL,IRC
RN^55@1981%&	1,980	1/10	C, N, R	H, J, K, C, E	B, D	S	P, R	ANG,DAL,IRC
RN^55@2001%&	2,000	1/10	C, N, R	H, J, K, C, E	B, D, F	S	P, R	ANG,DAL,IRC
RN^55@2031%&	2,030	1/10	C, N, R	H, J, K, C, E	B, D	S	P, R	ANG,DAL,IRC
RN^55@2051%&	2,050	1/10	C, N, R	H, J, K, C, E	B, D, F	S	P, R	ANG,DAL,IRC
RN^55@2081%&	2,080	1/10	C, N, R	H, J, K, C, E	B, D	S	P, R	ANG,DAL,IRC
RN^55@2101%&	2,100	1/10	C, N, R	H, J, K, C, E	B, D, F	S	P, R	ANG,DAL,IRC
	Resistance	Power	Term.	Char.	Res.	Level 1	Level 2	
Part Number	Value (Ohms)	Rating (W)	Type (^)	(@)	Tol. (%)	(FRL) (&)	(FRL) (&)	Manufacturer
RN^55@2131%&	2,130	1/10	C, N, R	H, J, K, C, E	B, D	S	P, R	ANG,DAL,IRC
RN^55@2151%&	2,150	1/10	C, N, R	H, J, K, C, E	B, D, F	S	P, R	ANG,DAL,IRC
RN^55@2181%&	2,180	1/10	C, N, R	H, J, K, C, E	B, D	S	P, R	ANG,DAL,IRC
RN^55@2211%&	2,210	1/10	C, N, R	H, J, K, C, E	B, D, F	S	P, R	ANG,DAL,IRC
RN^55@2231%&	2,230	1/10	C, N, R	H, J, K, C, E	B, D	S	P, R	ANG,DAL,IRC
RN^55@2261%&	2,260	1/10	C, N, R	H, J, K, C, E	B, D, F	S	P, R	ANG,DAL,IRC
RN^55@2291%&	2,290	1/10	C, N, R	H, J, K, C, E	B, D	S	P, R	ANG,DAL,IRC
	Resistance	Power	Term.	Char.	Res.	Level 1	Level 2	
Part Number	Value (Ohms)	Rating (W)	Type (^)	(@)	Tol. (%)	(FRL) (&)	(FRL) (&)	Manufacturer
RN^55@2321%&	2,320	1/10	C, N, R	H, J, K, C, E	B, D, F	S	P, R	ANG,DAL,IRC
RN^55@2341%&	2,340	1/10	C, N, R	H, J, K, C, E	B, D	S	P, R	ANG,DAL,IRC
RN^55@2371%&	2,370	1/10	C, N, R	H, J, K, C, E	B, D, F	S	P, R	ANG,DAL,IRC
RN^55@2401%&	2,400	1/10	C, N, R	H, J, K, C, E	B, D	S	P, R	ANG,DAL,IRC
RN^55@2431%&	2,430	1/10	C, N, R	H, J, K, C, E	B, D, F	S	P, R	ANG,DAL,IRC
RN^55@2461%&	2,460	1/10	C, N, R	H, J, K, C, E	B, D	S	P, R	ANG,DAL,IRC
RN^55@2491%&	2,490	1/10	C, N, R	H, J, K, C, E	B, D, F	S	P, R	ANG,DAL,IRC
	Resistance	Power	Term.	Char.	Res.	Level 1	Level 2	
Part Number	Value (Ohms)	Rating (W)	Type (^)	(@)	Tol. (%)	(FRL) (&)	(FRL) (&)	Manufacturer
RN^55@2521%&	2,520	1/10	C, N, R	H, J, K, C, E	B, D	S	P, R	ANG,DAL,IRC
RN^55@2551%&	2,550	1/10	C, N, R	H, J, K, C, E	B, D, F	S	P, R	ANG,DAL,IRC
RN^55@2581%&	2,580	1/10	C, N, R	H, J, K, C, E	B, D	S	P, R	ANG,DAL,IRC
RN^55@2611%&	2,610	1/10	C, N, R	H, J, K, C, E	B, D, F	S	P, R	ANG,DAL,IRC
RN^55@2641%&	2,640	1/10	C, N, R	H, J, K, C, E	B, D	S	P, R	ANG,DAL,IRC
RN^55@2671%&	2,670	1/10	C, N, R	H, J, K, C, E	B, D, F	S	P, R	ANG,DAL,IRC

RN^55@2711%&	2,710	1/10	C, N, R	H, J, K, C, E	B, D	S	P, R	ANG,DAL,IRC
	Resistance	Power	Term.	Char.	Res.	Level 1	Level 2	
Part Number	Value (Ohms)	Rating (W)	Type (^)	(@)	Tol. (%)	(FRL) (&)	(FRL) (&)	Manufacturer
RN^55@2741%&	2,740	1/10	C, N, R	H, J, K, C, E	B, D, F	S	P, R	ANG,DAL,IRC
RN^55@2771%&	2,770	1/10	C, N, R	H, J, K, C, E	B, D	S	P, R	ANG,DAL,IRC
RN^55@2801%&	2,800	1/10	C, N, R	H, J, K, C, E	B, D, F	S	P, R	ANG,DAL,IRC
RN^55@2841%&	2,840	1/10	C, N, R	H, J, K, C, E	B, D	S	P, R	ANG,DAL,IRC
RN^55@2871%&	2,870	1/10	C, N, R	H, J, K, C, E	B, D, F	S	P, R	ANG,DAL,IRC
RN^55@2911%&	2,910	1/10	C, N, R	H, J, K, C, E	B, D	S	P, R	ANG,DAL,IRC
RN^55@2941%&	2,940	1/10	C, N, R	H, J, K, C, E	B, D, F	S	P, R	ANG,DAL,IRC
	Resistance	Power	Term.	Char.	Res.	Level 1	Level 2	
Part Number	Value (Ohms)	Rating (W)	Type (^)	(@)	Tol. (%)	(FRL) (&)	(FRL) (&)	Manufacturer
RN^55@2981%&	2,980	1/10	C, N, R	H, J, K, C, E	B, D	S	P, R	ANG,DAL,IRC
RN^55@3011%&	3,010	1/10	C, N, R	H, J, K, C, E	B, D, F	S	P, R	ANG,DAL,IRC
RN^55@3051%&	3,050	1/10	C, N, R	H, J, K, C, E	B, D	S	P, R	ANG,DAL,IRC
RN^55@3091%&	3,090	1/10	C, N, R	H, J, K, C, E	B, D, F	S	P, R	ANG,DAL,IRC
RN^55@3121%&	3,120	1/10	C, N, R	H, J, K, C, E	B, D	S	P, R	ANG,DAL,IRC
RN^55@3161%&	3,160	1/10	C, N, R	H, J, K, C, E	B, D, F	S	P, R	ANG,DAL,IRC
RN^55@3201%&	3,200	1/10	C, N, R	H, J, K, C, E	B, D	S	P, R	ANG,DAL,IRC
	Resistance	Power	Term.	Char.	Res.	Level 1	Level 2	
Part Number	Value (Ohms)	Rating (W)	Type (^)	(@)	Tol. (%)	(FRL) (&)	(FRL) (&)	Manufacturer
RN^55@3241%&	3,240	1/10	C, N, R	H, J, K, C, E	B, D, F	S	P, R	ANG,DAL,IRC
RN^55@3281%&	3,280	1/10	C, N, R	H, J, K, C, E	B, D	S	P, R	ANG,DAL,IRC
RN^55@3321%&	3,320	1/10	C, N, R	H, J, K, C, E	B, D, F	S	P, R	ANG,DAL,IRC
RN^55@3361%&	3,360	1/10	C, N, R	H, J, K, C, E	B, D	S	P, R	ANG,DAL,IRC
RN^55@3401%&	3,400	1/10	C, N, R	H, J, K, C, E	B, D, F	S	P, R	ANG,DAL,IRC
RN^55@3441%&	3,440	1/10	C, N, R	H, J, K, C, E	B, D	S	P, R	ANG,DAL,IRC
RN^55@3481%&	3,480	1/10	C, N, R	H, J, K, C, E	B, D, F	S	P, R	ANG,DAL,IRC
	Resistance	Power	Term.	Char.	Res.	Level 1	Level 2	
Part Number	Value (Ohms)	Rating (W)	Type (^)	(@)	Tol. (%)	(FRL) (&)	(FRL) (&)	Manufacturer
RN^55@3521%&	3,520	1/10	C, N, R	H, J, K, C, E	B, D	S	P, R	ANG,DAL,IRC
RN^55@3571%&	3,570	1/10	C, N, R	H, J, K, C, E	B, D, F	S	P, R	ANG,DAL,IRC
RN^55@3611%&	3,610	1/10	C, N, R	H, J, K, C, E	B, D	S	P, R	ANG,DAL,IRC
RN^55@3651%&	3,650	1/10	C, N, R	H, J, K, C, E	B, D, F	S	P, R	ANG,DAL,IRC
RN^55@3701%&	3,700	1/10	C, N, R	H, J, K, C, E	B, D	S	P, R	ANG,DAL,IRC
RN^55@3741%&	3,740	1/10	C, N, R	H, J, K, C, E	B, D, F	S	P, R	ANG,DAL,IRC
RN^55@3791%&	3,790	1/10	C, N, R	H, J, K, C, E	B, D	S	P, R	ANG,DAL,IRC
	Resistance	Power	Term.	Char.	Res.	Level 1	Level 2	
Part Number	Value (Ohms)	Rating (W)	Type (^)	(@)	Tol. (%)	(FRL) (&)	(FRL) (&)	Manufacturer
RN^55@3831%&	3,830	1/10	C, N, R	H, J, K, C, E	B, D, F	S	P, R	ANG,DAL,IRC
RN^55@3881%&	3,880	1/10	C, N, R	H, J, K, C, E	B, D	S	P, R	ANG,DAL,IRC
RN^55@3921%&	3,920	1/10	C, N, R	H, J, K, C, E	B, D, F	S	P, R	ANG,DAL,IRC
RN^55@3971%&	3,970	1/10	C, N, R	H, J, K, C, E	B, D	S	P, R	ANG,DAL,IRC
RN^55@4021%&	4,020	1/10	C, N, R	H, J, K, C, E	B, D, F	S	P, R	ANG,DAL,IRC
RN^55@4071%&	4,070	1/10	C, N, R	H, J, K, C, E	B, D	S	P, R	ANG,DAL,IRC
RN^55@4121%&	4,120	1/10	C, N, R	H, J, K, C, E	B, D, F	S	P, R	ANG,DAL,IRC
	Resistance	Power	Term.	Char.	Res.	Level 1	Level 2	

Part Number	Value (Ohms)	Rating (W)	Type (^)	(@)	Tol. (%)	(FRL) (&)	(FRL) (&)	Manufacturer
RN^55@4171%&	4,170	1/10	C, N, R	H, J, K, C, E	B, D	S	P, R	ANG,DAL,IRC
RN^55@4221%&	4,220	1/10	C, N, R	H, J, K, C, E	B, D, F	S	P, R	ANG,DAL,IRC
RN^55@4271%&	4,270	1/10	C, N, R	H, J, K, C, E	B, D	S	P, R	ANG,DAL,IRC
RN^55@4321%&	4,320	1/10	C, N, R	H, J, K, C, E	B, D, F	S	P, R	ANG,DAL,IRC
RN^55@4371%&	4,370	1/10	C, N, R	H, J, K, C, E	B, D	S	P, R	ANG,DAL,IRC
RN^55@4421%&	4,420	1/10	C, N, R	H, J, K, C, E	B, D, F	S	P, R	ANG,DAL,IRC
RN^55@4481%&	4,480	1/10	C, N, R	H, J, K, C, E	B, D	S	P, R	ANG,DAL,IRC
	Resistance	Power	Term.	Char.	Res.	Level 1	Level 2	
Part Number	Value (Ohms)	Rating (W)	Type (^)	(@)	Tol. (%)	(FRL) (&)	(FRL) (&)	Manufacturer
RN^55@4531%&	4,530	1/10	C, N, R	H, J, K, C, E	B, D, F	S	P, R	ANG,DAL,IRC
RN^55@4591%&	4,590	1/10	C, N, R	H, J, K, C, E	B, D	S	P, R	ANG,DAL,IRC
RN^55@4641%&	4,640	1/10	C, N, R	H, J, K, C, E	B, D, F	S	P, R	ANG,DAL,IRC
RN^55@4701%&	4,700	1/10	C, N, R	H, J, K, C, E	B, D	S	P, R	ANG,DAL,IRC
RN^55@4751%&	4,750	1/10	C, N, R	H, J, K, C, E	B, D, F	S	P, R	ANG,DAL,IRC
RN^55@4811%&	4,810	1/10	C, N, R	H, J, K, C, E	B, D	S	P, R	ANG,DAL,IRC
RN^55@4871%&	4,870	1/10	C, N, R	H, J, K, C, E	B, D, F	S	P, R	ANG,DAL,IRC
	Resistance	Power	Term.	Char.	Res.	Level 1	Level 2	
Part Number	Value (Ohms)	Rating (W)	Type (^)	(@)	Tol. (%)	(FRL) (&)	(FRL) (&)	Manufacturer
RN^55@4931%&	4,930	1/10	C, N, R	H, J, K, C, E	B, D	S	P, R	ANG,DAL,IRC
RN^55@4991%&	4,990	1/10	C, N, R	H, J, K, C, E	B, D, F	S	P, R	ANG,DAL,IRC
RN^55@5051%&	5,050	1/10	C, N, R	H, J, K, C, E	B, D	S	P, R	ANG,DAL,IRC
RN^55@5111%&	5,110	1/10	C, N, R	H, J, K, C, E	B, D, F	S	P, R	ANG,DAL,IRC
RN^55@5171%&	5,170	1/10	C, N, R	H, J, K, C, E	B, D	S	P, R	ANG,DAL,IRC
RN^55@5231%&	5,230	1/10	C, N, R	H, J, K, C, E	B, D, F	S	P, R	ANG,DAL,IRC
RN^55@5301%&	5,300	1/10	C, N, R	H, J, K, C, E	B, D	S	P, R	ANG,DAL,IRC
	Resistance	Power	Term.	Char.	Res.	Level 1	Level 2	
Part Number	Value (Ohms)	Rating (W)	Type (^)	(@)	Tol. (%)	(FRL) (&)	(FRL) (&)	Manufacturer
RN^55@5361%&	5,360	1/10	C, N, R	H, J, K, C, E	B, D, F	S	P, R	ANG,DAL,IRC
RN^55@5421%&	5,420	1/10	C, N, R	H, J, K, C, E	B, D	S	P, R	ANG,DAL,IRC
RN^55@5491%&	5,490	1/10	C, N, R	H, J, K, C, E	B, D, F	S	P, R	ANG,DAL,IRC
RN^55@5561%&	5,560	1/10	C, N, R	H, J, K, C, E	B, D	S	P, R	ANG,DAL,IRC
RN^55@5621%&	5,620	1/10	C, N, R	H, J, K, C, E	B, D, F	S	P, R	ANG,DAL,IRC
RN^55@5691%&	5,690	1/10	C, N, R	H, J, K, C, E	B, D	S	P, R	ANG,DAL,IRC
RN^55@5761%&	5,760	1/10	C, N, R	H, J, K, C, E	B, D, F	S	P, R	ANG,DAL,IRC
	Resistance	Power	Term.	Char.	Res.	Level 1	Level 2	
Part Number	Value (Ohms)	Rating (W)	Type (^)	(@)	Tol. (%)	(FRL) (&)	(FRL) (&)	Manufacturer
RN^55@5831%&	5,830	1/10	C, N, R	H, J, K, C, E	B, D	S	P, R	ANG,DAL,IRC
RN^55@5901%&	5,900	1/10	C, N, R	H, J, K, C, E	B, D, F	S	P, R	ANG,DAL,IRC
RN^55@5971%&	5,970	1/10	C, N, R	H, J, K, C, E	B, D	S	P, R	ANG,DAL,IRC
RN^55@6041%&	6,040	1/10	C, N, R	H, J, K, C, E	B, D, F	S	P, R	ANG,DAL,IRC
RN^55@6121%&	6,120	1/10	C, N, R	H, J, K, C, E	B, D	S	P, R	ANG,DAL,IRC
RN^55@6191%&	6,190	1/10	C, N, R	H, J, K, C, E	B, D, F	S	P, R	ANG,DAL,IRC
RN^55@6261%&	6,260	1/10	C, N, R	H, J, K, C, E	B, D	S	P, R	ANG,DAL,IRC
	Resistance	Power	Term.	Char.	Res.	Level 1	Level 2	
Part Number	Value (Ohms)	Rating (W)	Type (^)	(@)	Tol. (%)	(FRL) (&)	(FRL) (&)	Manufacturer
RN^55@6341%&	6,340	1/10	C, N, R	H, J, K, C, E	B, D, F	S	P, R	ANG,DAL,IRC

RN^55@6421%&	6,420	1/10	C, N, R	H, J, K, C, E	B, D	S	P, R	ANG,DAL,IRC
RN^55@6491%&	6,490	1/10	C, N, R	H, J, K, C, E	B, D, F	S	P, R	ANG,DAL,IRC
RN^55@6571%&	6,570	1/10	C, N, R	H, J, K, C, E	B, D	S	P, R	ANG,DAL,IRC
RN^55@6651%&	6,650	1/10	C, N, R	H, J, K, C, E	B, D, F	S	P, R	ANG,DAL,IRC
RN^55@6731%&	6,730	1/10	C, N, R	H, J, K, C, E	B, D	S	P, R	ANG,DAL,IRC
RN^55@6811%&	6,810	1/10	C, N, R	H, J, K, C, E	B, D, F	S	P, R	ANG,DAL,IRC
	Resistance	Power	Term.	Char.	Res.	Level 1	Level 2	
Part Number	Value (Ohms)	Rating (W)	Type (^)	(@)	Tol. (%)	(FRL) (&)	(FRL) (&)	Manufacturer
RN^55@6901%&	6,900	1/10	C, N, R	H, J, K, C, E	B, D	S	P, R	ANG,DAL,IRC
RN^55@6981%&	6,980	1/10	C, N, R	H, J, K, C, E	B, D, F	S	P, R	ANG,DAL,IRC
RN^55@7061%&	7,060	1/10	C, N, R	H, J, K, C, E	B, D	S	P, R	ANG,DAL,IRC
RN^55@7151%&	7,150	1/10	C, N, R	H, J, K, C, E	B, D, F	S	P, R	ANG,DAL,IRC
RN^55@7231%&	7,230	1/10	C, N, R	H, J, K, C, E	B, D	S	P, R	ANG,DAL,IRC
RN^55@7321%&	7,320	1/10	C, N, R	H, J, K, C, E	B, D, F	S	P, R	ANG,DAL,IRC
RN^55@7411%&	7,410	1/10	C, N, R	H, J, K, C, E	B, D	S	P, R	ANG,DAL,IRC
	Resistance	Power	Term.	Char.	Res.	Level 1	Level 2	
Part Number	Value (Ohms)	Rating (W)	Type (^)	(@)	Tol. (%)	(FRL) (&)	(FRL) (&)	Manufacturer
RN^55@7501%&	7,500	1/10	C, N, R	H, J, K, C, E	B, D, F	S	P, R	ANG,DAL,IRC
RN^55@7591%&	7,590	1/10	C, N, R	H, J, K, C, E	B, D	S	P, R	ANG,DAL,IRC
RN^55@7681%&	7,680	1/10	C, N, R	H, J, K, C, E	B, D, F	S	P, R	ANG,DAL,IRC
RN^55@7771%&	7,770	1/10	C, N, R	H, J, K, C, E	B, D	S	P, R	ANG,DAL,IRC
RN^55@7871%&	7,870	1/10	C, N, R	H, J, K, C, E	B, D, F	S	P, R	ANG,DAL,IRC
RN^55@7961%&	7,960	1/10	C, N, R	H, J, K, C, E	B, D	S	P, R	ANG,DAL,IRC
RN^55@8061%&	8,060	1/10	C, N, R	H, J, K, C, E	B, D, F	S	P, R	ANG,DAL,IRC
	Resistance	Power	Term.	Char.	Res.	Level 1	Level 2	
Part Number	Value (Ohms)	Rating (W)	Type (^)	(@)	Tol. (%)	(FRL) (&)	(FRL) (&)	Manufacturer
RN^55@8161%&	8,160	1/10	C, N, R	H, J, K, C, E	B, D	S	P, R	ANG,DAL,IRC
RN^55@8251%&	8,250	1/10	C, N, R	H, J, K, C, E	B, D, F	S	P, R	ANG,DAL,IRC
RN^55@8351%&	8,350	1/10	C, N, R	H, J, K, C, E	B, D	S	P, R	ANG,DAL,IRC
RN^55@8451%&	8,450	1/10	C, N, R	H, J, K, C, E	B, D, F	S	P, R	ANG,DAL,IRC
RN^55@8561%&	8,560	1/10	C, N, R	H, J, K, C, E	B, D	S	P, R	ANG,DAL,IRC
RN^55@8661%&	8,660	1/10	C, N, R	H, J, K, C, E	B, D, F	S	P, R	ANG,DAL,IRC
RN^55@8761%&	8,760	1/10	C, N, R	H, J, K, C, E	B, D	S	P, R	ANG,DAL,IRC
	Resistance	Power	Term.	Char.	Res.	Level 1	Level 2	
Part Number	Value (Ohms)	Rating (W)	Type (^)	(@)	Tol. (%)	(FRL) (&)	(FRL) (&)	Manufacturer
RN^55@8871%&	8,870	1/10	C, N, R	H, J, K, C, E	B, D, F	S	P, R	ANG,DAL,IRC
RN^55@8981%&	8,980	1/10	C, N, R	H, J, K, C, E	B, D	S	P, R	ANG,DAL,IRC
RN^55@9091%&	9,090	1/10	C, N, R	H, J, K, C, E	B, D, F	S	P, R	ANG,DAL,IRC
RN^55@9201%&	9,200	1/10	C, N, R	H, J, K, C, E	B, D	S	P, R	ANG,DAL,IRC
RN^55@9311%&	9,310	1/10	C, N, R	H, J, K, C, E	B, D, F	S	P, R	ANG,DAL,IRC
RN^55@9421%&	9,420	1/10	C, N, R	H, J, K, C, E	B, D	S	P, R	ANG,DAL,IRC
RN^55@9531%&	9,530	1/10	C, N, R	H, J, K, C, E	B, D, F	S	P, R	ANG,DAL,IRC
	Resistance	Power	Term.	Char.	Res.	Level 1	Level 2	
Part Number	Value (Ohms)	Rating (W)	Type (^)	(@)	Tol. (%)	(FRL) (&)	(FRL) (&)	Manufacturer
RN^55@9651%&	9,650	1/10	C, N, R	H, J, K, C, E	B, D	S	P, R	ANG,DAL,IRC
RN^55@9761%&	9,760	1/10	C, N, R	H, J, K, C, E	B, D, F	S	P, R	ANG,DAL,IRC
RN^55@9881%&	9,880	1/10	C, N, R	H, J, K, C, E	B, D	S	P, R	ANG,DAL,IRC

RN^55 Film Resistors: 10,000 Ohms through 98,800 Ohms

	Resistance	Power	Term.	Char.	Res.	Level 1	Level 2	
Part Number	Value (Ohms)	Rating (W)	Type (^)	(@)	Tol. (%)	(FRL) (&)	(FRL) (&)	Manufacturer
RN^55@1002%&	10,000	1/10	C, N, R	H, J, K, C, E	B, D, F	S	P, R	ANG,DAL,IRC
RN^55@1012%&	10,100	1/10	C, N, R	H, J, K, C, E	B, D	S	P, R	ANG,DAL,IRC
RN^55@1022%&	10,200	1/10	C, N, R	H, J, K, C, E	B, D, F	S	P, R	ANG,DAL,IRC
RN^55@1042%&	10,400	1/10	C, N, R	H, J, K, C, E	B, D	S	P, R	ANG,DAL,IRC
RN^55@1052%&	10,500	1/10	C, N, R	H, J, K, C, E	B, D, F	S	P, R	ANG,DAL,IRC
RN^55@1062%&	10,600	1/10	C, N, R	H, J, K, C, E	B, D	S	P, R	ANG,DAL,IRC
RN^55@1072%&	10,700	1/10	C, N, R	H, J, K, C, E	B, D, F	S	P, R	ANG,DAL,IRC
	Resistance	Power	Term.	Char.	Res.	Level 1	Level 2	
Part Number	Value (Ohms)	Rating (W)	Type (^)	(@)	Tol. (%)	(FRL) (&)	(FRL) (&)	Manufacturer
RN^55@1092%&	10,900	1/10	C, N, R	H, J, K, C, E	B, D	S	P, R	ANG,DAL,IRC
RN^55@1102%&	11,000	1/10	C, N, R	H, J, K, C, E	B, D, F	S	P, R	ANG,DAL,IRC
RN^55@1112%&	11,100	1/10	C, N, R	H, J, K, C, E	B, D	S	P, R	ANG,DAL,IRC
RN^55@1132%&	11,300	1/10	C, N, R	H, J, K, C, E	B, D, F	S	P, R	ANG,DAL,IRC
RN^55@1142%&	11,400	1/10	C, N, R	H, J, K, C, E	B, D	S	P, R	ANG,DAL,IRC
RN^55@1152%&	11,500	1/10	C, N, R	H, J, K, C, E	B, D, F	S	P, R	ANG,DAL,IRC
RN^55@1172%&	11,700	1/10	C, N, R	H, J, K, C, E	B, D	S	P, R	ANG,DAL,IRC
	Resistance	Power	Term.	Char.	Res.	Level 1	Level 2	
Part Number	Value (Ohms)	Rating (W)	Type (^)	(@)	Tol. (%)	(FRL) (&)	(FRL) (&)	Manufacturer
RN^55@1182%&	11,800	1/10	C, N, R	H, J, K, C, E	B, D, F	S	P, R	ANG,DAL,IRC
RN^55@1202%&	12,000	1/10	C, N, R	H, J, K, C, E	B, D	S	P, R	ANG,DAL,IRC
RN^55@1212%&	12,100	1/10	C, N, R	H, J, K, C, E	B, D, F	S	P, R	ANG,DAL,IRC
RN^55@1232%&	12,300	1/10	C, N, R	H, J, K, C, E	B, D	S	P, R	ANG,DAL,IRC
RN^55@1242%&	12,400	1/10	C, N, R	H, J, K, C, E	B, D, F	S	P, R	ANG,DAL,IRC
RN^55@1262%&	12,600	1/10	C, N, R	H, J, K, C, E	B, D	S	P, R	ANG,DAL,IRC
RN^55@1272%&	12,700	1/10	C, N, R	H, J, K, C, E	B, D, F	S	P, R	ANG,DAL,IRC
	Resistance	Power	Term.	Char.	Res.	Level 1	Level 2	
Part Number	Value (Ohms)	Rating (W)	Type (^)	(@)	Tol. (%)	(FRL) (&)	(FRL) (&)	Manufacturer
RN^55@1292%&	12,900	1/10	C, N, R	H, J, K, C, E	B, D	S	P, R	ANG,DAL,IRC
RN^55@1302%&	13,000	1/10	C, N, R	H, J, K, C, E	B, D, F	S	P, R	ANG,DAL,IRC
RN^55@1322%&	13,200	1/10	C, N, R	H, J, K, C, E	B, D	S	P, R	ANG,DAL,IRC
RN^55@1332%&	13,300	1/10	C, N, R	H, J, K, C, E	B, D, F	S	P, R	ANG,DAL,IRC
RN^55@1352%&	13,500	1/10	C, N, R	H, J, K, C, E	B, D	S	P, R	ANG,DAL,IRC
RN^55@1372%&	13,700	1/10	C, N, R	H, J, K, C, E	B, D, F	S	P, R	ANG,DAL,IRC
RN^55@1382%&	13,800	1/10	C, N, R	H, J, K, C, E	B, D	S	P, R	ANG,DAL,IRC
	Resistance	Power	Term.	Char.	Res.	Level 1	Level 2	
Part Number	Value (Ohms)	Rating (W)	Type (^)	(@)	Tol. (%)	(FRL) (&)	(FRL) (&)	Manufacturer
RN^55@1402%&	14,000	1/10	C, N, R	H, J, K, C, E	B, D, F	S	P, R	ANG,DAL,IRC
RN^55@1422%&	14,200	1/10	C, N, R	H, J, K, C, E	B, D	S	P, R	ANG,DAL,IRC
RN^55@1432%&	14,300	1/10	C, N, R	H, J, K, C, E	B, D, F	S	P, R	ANG,DAL,IRC
RN^55@1452%&	14,500	1/10	C, N, R	H, J, K, C, E	B, D	S	P, R	ANG,DAL,IRC

RN^55@1472%&	14,700	1/10	C, N, R	H, J, K, C, E	B, D, F	S	P, R	ANG,DAL,IRC
RN^55@1492%&	14,900	1/10	C, N, R	H, J, K, C, E	B, D	S	P, R	ANG,DAL,IRC
RN^55@1502%&	15,000	1/10	C, N, R	H, J, K, C, E	B, D, F	S	P, R	ANG,DAL,IRC
	Resistance	Power	Term.	Char.	Res.	Level 1	Level 2	
Part Number	Value (Ohms)	Rating (W)	Type (^)	(@)	Tol. (%)	(FRL) (&)	(FRL) (&)	Manufacturer
RN^55@1522%&	15,200	1/10	C, N, R	H, J, K, C, E	B, D	S	P, R	ANG,DAL,IRC
RN^55@1542%&	15,400	1/10	C, N, R	H, J, K, C, E	B, D, F	S	P, R	ANG,DAL,IRC
RN^55@1562%&	15,600	1/10	C, N, R	H, J, K, C, E	B, D	S	P, R	ANG,DAL,IRC
RN^55@1582%&	15,800	1/10	C, N, R	H, J, K, C, E	B, D, F	S	P, R	ANG,DAL,IRC
RN^55@1602%&	16,000	1/10	C, N, R	H, J, K, C, E	B, D	S	P, R	ANG,DAL,IRC
RN^55@1622%&	16,200	1/10	C, N, R	H, J, K, C, E	B, D, F	S	P, R	ANG,DAL,IRC
RN^55@1642%&	16,400	1/10	C, N, R	H, J, K, C, E	B, D	S	P, R	ANG,DAL,IRC
	Resistance	Power	Term.	Char.	Res.	Level 1	Level 2	
Part Number	Value (Ohms)	Rating (W)	Type (^)	(@)	Tol. (%)	(FRL) (&)	(FRL) (&)	Manufacturer
RN^55@1652%&	16,500	1/10	C, N, R	H, J, K, C, E	B, D, F	S	P, R	ANG,DAL,IRC
RN^55@1672%&	16,700	1/10	C, N, R	H, J, K, C, E	B, D	S	P, R	ANG,DAL,IRC
RN^55@1692%&	16,900	1/10	C, N, R	H, J, K, C, E	B, D, F	S	P, R	ANG,DAL,IRC
RN^55@1722%&	17,200	1/10	C, N, R	H, J, K, C, E	B, D	S	P, R	ANG,DAL,IRC
RN^55@1742%&	17,400	1/10	C, N, R	H, J, K, C, E	B, D, F	S	P, R	ANG,DAL,IRC
RN^55@1762%&	17,600	1/10	C, N, R	H, J, K, C, E	B, D	S	P, R	ANG,DAL,IRC
RN^55@1782%&	17,800	1/10	C, N, R	H, J, K, C, E	B, D, F	S	P, R	ANG,DAL,IRC
	Resistance	Power	Term.	Char.	Res.	Level 1	Level 2	
Part Number	Value (Ohms)	Rating (W)	Type (^)	(@)	Tol. (%)	(FRL) (&)	(FRL) (&)	Manufacturer
RN^55@1802%&	18,000	1/10	C, N, R	H, J, K, C, E	B, D	S	P, R	ANG,DAL,IRC
RN^55@1822%&	18,200	1/10	C, N, R	H, J, K, C, E	B, D, F	S	P, R	ANG,DAL,IRC
RN^55@1842%&	18,400	1/10	C, N, R	H, J, K, C, E	B, D	S	P, R	ANG,DAL,IRC
RN^55@1872%&	18,700	1/10	C, N, R	H, J, K, C, E	B, D, F	S	P, R	ANG,DAL,IRC
RN^55@1892%&	18,900	1/10	C, N, R	H, J, K, C, E	B, D	S	P, R	ANG,DAL,IRC
RN^55@1912%&	19,100	1/10	C, N, R	H, J, K, C, E	B, D, F	S	P, R	ANG,DAL,IRC
RN^55@1932%&	19,300	1/10	C, N, R	H, J, K, C, E	B, D	S	P, R	ANG,DAL,IRC
	Resistance	Power	Term.	Char.	Res.	Level 1	Level 2	
Part Number	Value (Ohms)	Rating (W)	Type (^)	(@)	Tol. (%)	(FRL) (&)	(FRL) (&)	Manufacturer
RN^55@1962%&	19,600	1/10	C, N, R	H, J, K, C, E	B, D, F	S	P, R	ANG,DAL,IRC
RN^55@1982%&	19,800	1/10	C, N, R	H, J, K, C, E	B, D	S	P, R	ANG,DAL,IRC
RN^55@2002%&	20,000	1/10	C, N, R	H, J, K, C, E	B, D, F	S	P, R	ANG,DAL,IRC
RN^55@2032%&	20,300	1/10	C, N, R	H, J, K, C, E	B, D	S	P, R	ANG,DAL,IRC
RN^55@2052%&	20,500	1/10	C, N, R	H, J, K, C, E	B, D, F	S	P, R	ANG,DAL,IRC
RN^55@2082%&	20,800	1/10	C, N, R	H, J, K, C, E	B, D	S	P, R	ANG,DAL,IRC
RN^55@2102%&	21,000	1/10	C, N, R	H, J, K, C, E	B, D, F	S	P, R	ANG,DAL,IRC
	Resistance	Power	Term.	Char.	Res.	Level 1	Level 2	
Part Number	Value (Ohms)	Rating (W)	Type (^)	(@)	Tol. (%)	(FRL) (&)	(FRL) (&)	Manufacturer
RN^55@2132%&	21,300	1/10	C, N, R	H, J, K, C, E	B, D	S	P, R	ANG,DAL,IRC
RN^55@2152%&	21,500	1/10	C, N, R	H, J, K, C, E	B, D, F	S	P, R	ANG,DAL,IRC
RN^55@2182%&	21,800	1/10	C, N, R	H, J, K, C, E	B, D	S	P, R	ANG,DAL,IRC
RN^55@2212%&	22,100	1/10	C, N, R	H, J, K, C, E	B, D, F	S	P, R	ANG,DAL,IRC
RN^55@2232%&	22,300	1/10	C, N, R	H, J, K, C, E	B, D	S	P, R	ANG,DAL,IRC
RN^55@2262%&	22,600	1/10	C, N, R	H, J, K, C, E	B, D, F	S	P, R	ANG,DAL,IRC

RN^55@2292%&	22,900	1/10	C, N, R	H, J, K, C, E	B, D	S	P, R	ANG,DAL,IRC
	Resistance	Power	Term.	Char.	Res.	Level 1	Level 2	
Part Number	Value (Ohms)	Rating (W)	Type (^)	(@)	Tol. (%)	(FRL) (&)	(FRL) (&)	Manufacturer
RN^55@2322%&	23,200	1/10	C, N, R	H, J, K, C, E	B, D, F	S	P, R	ANG,DAL,IRC
RN^55@2342%&	23,400	1/10	C, N, R	H, J, K, C, E	B, D	S	P, R	ANG,DAL,IRC
RN^55@2372%&	23,700	1/10	C, N, R	H, J, K, C, E	B, D, F	S	P, R	ANG,DAL,IRC
RN^55@2402%&	24,000	1/10	C, N, R	H, J, K, C, E	B, D	S	P, R	ANG,DAL,IRC
RN^55@2432%&	24,300	1/10	C, N, R	H, J, K, C, E	B, D, F	S	P, R	ANG,DAL,IRC
RN^55@2462%&	24,600	1/10	C, N, R	H, J, K, C, E	B, D	S	P, R	ANG,DAL,IRC
RN^55@2492%&	24,900	1/10	C, N, R	H, J, K, C, E	B, D, F	S	P, R	ANG,DAL,IRC
	Resistance	Power	Term.	Char.	Res.	Level 1	Level 2	
Part Number	Value (Ohms)	Rating (W)	Type (^)	(@)	Tol. (%)	(FRL) (&)	(FRL) (&)	Manufacturer
RN^55@2522%&	25,200	1/10	C, N, R	H, J, K, C, E	B, D	S	P, R	ANG,DAL,IRC
RN^55@2552%&	25,500	1/10	C, N, R	H, J, K, C, E	B, D, F	S	P, R	ANG,DAL,IRC
RN^55@2582%&	25,800	1/10	C, N, R	H, J, K, C, E	B, D	S	P, R	ANG,DAL,IRC
RN^55@2612%&	26,100	1/10	C, N, R	H, J, K, C, E	B, D, F	S	P, R	ANG,DAL,IRC
RN^55@2642%&	26,400	1/10	C, N, R	H, J, K, C, E	B, D	S	P, R	ANG,DAL,IRC
RN^55@2672%&	26,700	1/10	C, N, R	H, J, K, C, E	B, D, F	S	P, R	ANG,DAL,IRC
RN^55@2712%&	27,100	1/10	C, N, R	H, J, K, C, E	B, D	S	P, R	ANG,DAL,IRC
	Resistance	Power	Term.	Char.	Res.	Level 1	Level 2	
Part Number	Value (Ohms)	Rating (W)	Type (^)	(@)	Tol. (%)	(FRL) (&)	(FRL) (&)	Manufacturer
RN^55@2742%&	27,400	1/10	C, N, R	H, J, K, C, E	B, D, F	S	P, R	ANG,DAL,IRC
RN^55@2772%&	27,700	1/10	C, N, R	H, J, K, C, E	B, D	S	P, R	ANG,DAL,IRC
RN^55@2802%&	28,000	1/10	C, N, R	H, J, K, C, E	B, D, F	S	P, R	ANG,DAL,IRC
RN^55@2842%&	28,400	1/10	C, N, R	H, J, K, C, E	B, D	S	P, R	ANG,DAL,IRC
RN^55@2872%&	28,700	1/10	C, N, R	H, J, K, C, E	B, D, F	S	P, R	ANG,DAL,IRC
RN^55@2912%&	29,100	1/10	C, N, R	H, J, K, C, E	B, D	S	P, R	ANG,DAL,IRC
RN^55@2942%&	29,400	1/10	C, N, R	H, J, K, C, E	B, D, F	S	P, R	ANG,DAL,IRC
	Resistance	Power	Term.	Char.	Res.	Level 1	Level 2	
Part Number	Value (Ohms)	Rating (W)	Type (^)	(@)	Tol. (%)	(FRL) (&)	(FRL) (&)	Manufacturer
RN^55@2982%&	29,800	1/10	C, N, R	H, J, K, C, E	B, D	S	P, R	ANG,DAL,IRC
RN^55@3012%&	30,100	1/10	C, N, R	H, J, K, C, E	B, D, F	S	P, R	ANG,DAL,IRC
RN^55@3052%&	30,500	1/10	C, N, R	H, J, K, C, E	B, D	S	P, R	ANG,DAL,IRC
RN^55@3092%&	30,900	1/10	C, N, R	H, J, K, C, E	B, D, F	S	P, R	ANG,DAL,IRC
RN^55@3122%&	31,200	1/10	C, N, R	H, J, K, C, E	B, D	S	P, R	ANG,DAL,IRC
RN^55@3162%&	31,600	1/10	C, N, R	H, J, K, C, E	B, D, F	S	P, R	ANG,DAL,IRC
RN^55@3202%&	32,000	1/10	C, N, R	H, J, K, C, E	B, D	S	P, R	ANG,DAL,IRC
	Resistance	Power	Term.	Char.	Res.	Level 1	Level 2	
Part Number	Value (Ohms)	Rating (W)	Type (^)	(@)	Tol. (%)	(FRL) (&)	(FRL) (&)	Manufacturer
RN^55@3242%&	32,400	1/10	C, N, R	H, J, K, C, E	B, D, F	S	P, R	ANG,DAL,IRC
RN^55@3282%&	32,800	1/10	C, N, R	H, J, K, C, E	B, D	S	P, R	ANG,DAL,IRC
RN^55@3322%&	33,200	1/10	C, N, R	H, J, K, C, E	B, D, F	S	P, R	ANG,DAL,IRC
RN^55@3362%&	33,600	1/10	C, N, R	H, J, K, C, E	B, D	S	P, R	ANG,DAL,IRC
RN^55@3402%&	34,000	1/10	C, N, R	H, J, K, C, E	B, D, F	S	P, R	ANG,DAL,IRC
RN^55@3442%&	34,400	1/10	C, N, R	H, J, K, C, E	B, D	S	P, R	ANG,DAL,IRC
RN^55@3482%&	34,800	1/10	C, N, R	H, J, K, C, E	B, D, F	S	P, R	ANG,DAL,IRC
	Resistance	Power	Term.	Char.	Res.	Level 1	Level 2	

Part Number	Value (Ohms)	Rating (W)	Type (^)	(@)	Tol. (%)	(FRL) (&)	(FRL) (&)	Manufacturer
RN^55@3522%&	35,200	1/10	C, N, R	H, J, K, C, E	B, D	S	P, R	ANG,DAL,IRC
RN^55@3572%&	35,700	1/10	C, N, R	H, J, K, C, E	B, D, F	S	P, R	ANG,DAL,IRC
RN^55@3612%&	36,100	1/10	C, N, R	H, J, K, C, E	B, D	S	P, R	ANG,DAL,IRC
RN^55@3652%&	36,500	1/10	C, N, R	H, J, K, C, E	B, D, F	S	P, R	ANG,DAL,IRC
RN^55@3702%&	37,000	1/10	C, N, R	H, J, K, C, E	B, D	S	P, R	ANG,DAL,IRC
RN^55@3742%&	37,400	1/10	C, N, R	H, J, K, C, E	B, D, F	S	P, R	ANG,DAL,IRC
RN^55@3792%&	37,900	1/10	C, N, R	H, J, K, C, E	B, D	S	P, R	ANG,DAL,IRC
	Resistance	Power	Term.	Char.	Res.	Level 1	Level 2	
Part Number	Value (Ohms)	Rating (W)	Type (^)	(@)	Tol. (%)	(FRL) (&)	(FRL) (&)	Manufacturer
RN^55@3832%&	38,300	1/10	C, N, R	H, J, K, C, E	B, D, F	S	P, R	ANG,DAL,IRC
RN^55@3882%&	38,800	1/10	C, N, R	H, J, K, C, E	B, D	S	P, R	ANG,DAL,IRC
RN^55@3922%&	39,200	1/10	C, N, R	H, J, K, C, E	B, D, F	S	P, R	ANG,DAL,IRC
RN^55@3972%&	39,700	1/10	C, N, R	H, J, K, C, E	B, D	S	P, R	ANG,DAL,IRC
RN^55@4022%&	40,200	1/10	C, N, R	H, J, K, C, E	B, D, F	S	P, R	ANG,DAL,IRC
RN^55@4072%&	40,700	1/10	C, N, R	H, J, K, C, E	B, D	S	P, R	ANG,DAL,IRC
RN^55@4122%&	41,200	1/10	C, N, R	H, J, K, C, E	B, D, F	S	P, R	ANG,DAL,IRC
	Resistance	Power	Term.	Char.	Res.	Level 1	Level 2	
Part Number	Value (Ohms)	Rating (W)	Type (^)	(@)	Tol. (%)	(FRL) (&)	(FRL) (&)	Manufacturer
RN^55@4172%&	41,700	1/10	C, N, R	H, J, K, C, E	B, D	S	P, R	ANG,DAL,IRC
RN^55@4222%&	42,200	1/10	C, N, R	H, J, K, C, E	B, D, F	S	P, R	ANG,DAL,IRC
RN^55@4272%&	42,700	1/10	C, N, R	H, J, K, C, E	B, D	S	P, R	ANG,DAL,IRC
RN^55@4322%&	43,200	1/10	C, N, R	H, J, K, C, E	B, D, F	S	P, R	ANG,DAL,IRC
RN^55@4372%&	43,700	1/10	C, N, R	H, J, K, C, E	B, D	S	P, R	ANG,DAL,IRC
RN^55@4422%&	44,200	1/10	C, N, R	H, J, K, C, E	B, D, F	S	P, R	ANG,DAL,IRC
RN^55@4482%&	44,800	1/10	C, N, R	H, J, K, C, E	B, D	S	P, R	ANG,DAL,IRC
	Resistance	Power	Term.	Char.	Res.	Level 1	Level 2	
Part Number	Value (Ohms)	Rating (W)	Type (^)	(@)	Tol. (%)	(FRL) (&)	(FRL) (&)	Manufacturer
RN^55@4532%&	45,300	1/10	C, N, R	H, J, K, C, E	B, D, F	S	P, R	ANG,DAL,IRC
RN^55@4592%&	45,900	1/10	C, N, R	H, J, K, C, E	B, D	S	P, R	ANG,DAL,IRC
RN^55@4642%&	46,400	1/10	C, N, R	H, J, K, C, E	B, D, F	S	P, R	ANG,DAL,IRC
RN^55@4702%&	47,000	1/10	C, N, R	H, J, K, C, E	B, D	S	P, R	ANG,DAL,IRC
RN^55@4752%&	47,500	1/10	C, N, R	H, J, K, C, E	B, D, F	S	P, R	ANG,DAL,IRC
RN^55@4812%&	48,100	1/10	C, N, R	H, J, K, C, E	B, D	S	P, R	ANG,DAL,IRC
RN^55@4872%&	48,700	1/10	C, N, R	H, J, K, C, E	B, D, F	S	P, R	ANG,DAL,IRC
	Resistance	Power	Term.	Char.	Res.	Level 1	Level 2	
Part Number	Value (Ohms)	Rating (W)	Type (^)	(@)	Tol. (%)	(FRL) (&)	(FRL) (&)	Manufacturer
RN^55@4932%&	49,300	1/10	C, N, R	H, J, K, C, E	B, D	S	P, R	ANG,DAL,IRC
RN^55@4992%&	49,900	1/10	C, N, R	H, J, K, C, E	B, D, F	S	P, R	ANG,DAL,IRC
RN^55@5052%&	50,500	1/10	C, N, R	H, J, K, C, E	B, D	S	P, R	ANG,DAL,IRC
RN^55@5112%&	51,100	1/10	C, N, R	H, J, K, C, E	B, D, F	S	P, R	ANG,DAL,IRC
RN^55@5172%&	51,700	1/10	C, N, R	H, J, K, C, E	B, D	S	P, R	ANG,DAL,IRC
RN^55@5232%&	52,300	1/10	C, N, R	H, J, K, C, E	B, D, F	S	P, R	ANG,DAL,IRC
RN^55@5302%&	53,000	1/10	C, N, R	H, J, K, C, E	B, D	S	P, R	ANG,DAL,IRC
	Resistance	Power	Term.	Char.	Res.	Level 1	Level 2	
Part Number	Value (Ohms)	Rating (W)	Type (^)	(@)	Tol. (%)	(FRL) (&)	(FRL) (&)	Manufacturer
RN^55@5362%&	53,600	1/10	C, N, R	H, J, K, C, E	B, D, F	S	P, R	ANG,DAL,IRC

RN^55@5422%&	54,200	1/10	C, N, R	H, J, K, C, E	B, D	S	P, R	ANG,DAL,IRC
RN^55@5492%&	54,900	1/10	C, N, R	H, J, K, C, E	B, D, F	S	P, R	ANG,DAL,IRC
RN^55@5562%&	55,600	1/10	C, N, R	H, J, K, C, E	B, D	S	P, R	ANG,DAL,IRC
RN^55@5622%&	56,200	1/10	C, N, R	H, J, K, C, E	B, D, F	S	P, R	ANG,DAL,IRC
RN^55@5692%&	56,900	1/10	C, N, R	H, J, K, C, E	B, D	S	P, R	ANG,DAL,IRC
RN^55@5762%&	57,600	1/10	C, N, R	H, J, K, C, E	B, D, F	S	P, R	ANG,DAL,IRC
	Resistance	Power	Term.	Char.	Res.	Level 1	Level 2	
Part Number	Value (Ohms)	Rating (W)	Type (^)	(@)	Tol. (%)	(FRL) (&)	(FRL) (&)	Manufacturer
RN^55@5832%&	58,300	1/10	C, N, R	H, J, K, C, E	B, D	S	P, R	ANG,DAL,IRC
RN^55@5902%&	59,000	1/10	C, N, R	H, J, K, C, E	B, D, F	S	P, R	ANG,DAL,IRC
RN^55@5972%&	59,700	1/10	C, N, R	H, J, K, C, E	B, D	S	P, R	ANG,DAL,IRC
RN^55@6042%&	60,400	1/10	C, N, R	H, J, K, C, E	B, D, F	S	P, R	ANG,DAL,IRC
RN^55@6122%&	61,200	1/10	C, N, R	H, J, K, C, E	B, D	S	P, R	ANG,DAL,IRC
RN^55@6192%&	61,900	1/10	C, N, R	H, J, K, C, E	B, D, F	S	P, R	ANG,DAL,IRC
RN^55@6262%&	62,600	1/10	C, N, R	H, J, K, C, E	B, D	S	P, R	ANG,DAL,IRC
	Resistance	Power	Term.	Char.	Res.	Level 1	Level 2	
Part Number	Value (Ohms)	Rating (W)	Type (^)	(@)	Tol. (%)	(FRL) (&)	(FRL) (&)	Manufacturer
RN^55@6342%&	63,400	1/10	C, N, R	H, J, K, C, E	B, D, F	S	P, R	ANG,DAL,IRC
RN^55@6422%&	64,200	1/10	C, N, R	H, J, K, C, E	B, D	S	P, R	ANG,DAL,IRC
RN^55@6492%&	64,900	1/10	C, N, R	H, J, K, C, E	B, D, F	S	P, R	ANG,DAL,IRC
RN^55@6572%&	65,700	1/10	C, N, R	H, J, K, C, E	B, D	S	P, R	ANG,DAL,IRC
RN^55@6652%&	66,500	1/10	C, N, R	H, J, K, C, E	B, D, F	S	P, R	ANG,DAL,IRC
RN^55@6732%&	67,300	1/10	C, N, R	H, J, K, C, E	B, D	S	P, R	ANG,DAL,IRC
RN^55@6812%&	68,100	1/10	C, N, R	H, J, K, C, E	B, D, F	S	P, R	ANG,DAL,IRC
	Resistance	Power	Term.	Char.	Res.	Level 1	Level 2	
Part Number	Value (Ohms)	Rating (W)	Type (^)	(@)	Tol. (%)	(FRL) (&)	(FRL) (&)	Manufacturer
RN^55@6902%&	69,000	1/10	C, N, R	H, J, K, C, E	B, D	S	P, R	ANG,DAL,IRC
RN^55@6982%&	69,800	1/10	C, N, R	H, J, K, C, E	B, D, F	S	P, R	ANG,DAL,IRC
RN^55@7062%&	70,600	1/10	C, N, R	H, J, K, C, E	B, D	S	P, R	ANG,DAL,IRC
RN^55@7152%&	71,500	1/10	C, N, R	H, J, K, C, E	B, D, F	S	P, R	ANG,DAL,IRC
RN^55@7232%&	72,300	1/10	C, N, R	H, J, K, C, E	B, D	S	P, R	ANG,DAL,IRC
RN^55@7322%&	73,200	1/10	C, N, R	H, J, K, C, E	B, D, F	S	P, R	ANG,DAL,IRC
RN^55@7412%&	74,100	1/10	C, N, R	H, J, K, C, E	B, D	S	P, R	ANG,DAL,IRC
	Resistance	Power	Term.	Char.	Res.	Level 1	Level 2	
Part Number	Value (Ohms)	Rating (W)	Type (^)	(@)	Tol. (%)	(FRL) (&)	(FRL) (&)	Manufacturer
RN^55@7502%&	75,000	1/10	C, N, R	H, J, K, C, E	B, D, F	S	P, R	ANG,DAL,IRC
RN^55@7592%&	75,900	1/10	C, N, R	H, J, K, C, E	B, D	S	P, R	ANG,DAL,IRC
RN^55@7682%&	76,800	1/10	C, N, R	H, J, K, C, E	B, D, F	S	P, R	ANG,DAL,IRC
RN^55@7772%&	77,700	1/10	C, N, R	H, J, K, C, E	B, D	S	P, R	ANG,DAL,IRC
RN^55@7872%&	78,700	1/10	C, N, R	H, J, K, C, E	B, D, F	S	P, R	ANG,DAL,IRC
RN^55@7962%&	79,600	1/10	C, N, R	H, J, K, C, E	B, D	S	P, R	ANG,DAL,IRC
RN^55@8062%&	80,600	1/10	C, N, R	H, J, K, C, E	B, D, F	S	P, R	ANG,DAL,IRC
	Resistance	Power	Term.	Char.	Res.	Level 1	Level 2	
Part Number	Value (Ohms)	Rating (W)	Type (^)	(@)	Tol. (%)	(FRL) (&)	(FRL) (&)	Manufacturer
RN^55@8162%&	81,600	1/10	C, N, R	H, J, K, C, E	B, D	S	P, R	ANG,DAL,IRC
RN^55@8252%&	82,500	1/10	C, N, R	H, J, K, C, E	B, D, F	S	P, R	ANG,DAL,IRC
RN^55@8352%&	83,500	1/10	C, N, R	H, J, K, C, E	B, D	S	P, R	ANG,DAL,IRC

RN^55@8452%&	84,500	1/10	C, N, R	H, J, K, C, E	B, D, F	S	P, R	ANG,DAL,IRC
RN^55@8562%&	85,600	1/10	C, N, R	H, J, K, C, E	B, D	S	P, R	ANG,DAL,IRC
RN^55@8662%&	86,600	1/10	C, N, R	H, J, K, C, E	B, D, F	S	P, R	ANG,DAL,IRC
RN^55@8762%&	87,600	1/10	C, N, R	H, J, K, C, E	B, D	S	P, R	ANG,DAL,IRC
	Resistance	Power	Term.	Char.	Res.	Level 1	Level 2	
Part Number	Value (Ohms)	Rating (W)	Type (^)	(@)	Tol. (%)	(FRL) (&)	(FRL) (&)	Manufacturer
RN^55@8872%&	88,700	1/10	C, N, R	H, J, K, C, E	B, D, F	S	P, R	ANG,DAL,IRC
RN^55@8982%&	89,800	1/10	C, N, R	H, J, K, C, E	B, D	S	P, R	ANG,DAL,IRC
RN^55@9092%&	90,900	1/10	C, N, R	H, J, K, C, E	B, D, F	S	P, R	ANG,DAL,IRC
RN^55@9202%&	92,000	1/10	C, N, R	H, J, K, C, E	B, D	S	P, R	ANG,DAL,IRC
RN^55@9312%&	93,100	1/10	C, N, R	H, J, K, C, E	B, D, F	S	P, R	ANG,DAL,IRC
RN^55@9422%&	94,200	1/10	C, N, R	H, J, K, C, E	B, D	S	P, R	ANG,DAL,IRC
RN^55@9532%&	95,300	1/10	C, N, R	H, J, K, C, E	B, D, F	S	P, R	ANG,DAL,IRC
	Resistance	Power	Term.	Char.	Res.	Level 1	Level 2	
Part Number	Value (Ohms)	Rating (W)	Type (^)	(@)	Tol. (%)	(FRL) (&)	(FRL) (&)	Manufacturer
RN^55@9652%&	96,500	1/10	C, N, R	H, J, K, C, E	B, D	S	P, R	ANG,DAL,IRC
RN^55@9762%&	97,600	1/10	C, N, R	H, J, K, C, E	B, D, F	S	P, R	ANG,DAL,IRC
RN^55@9882%&	98,800	1/10	C, N, R	H, J, K, C, E	B, D	S	P, R	ANG,DAL,IRC

RN^55 Film Resistors: 100,000 Ohms through 988,000 Ohms

	Resistance	Power	Term.	Char.	Res.	Level 1	Level 2	
Part Number	Value (Ohms)	Rating (W)	Type (^)	(@)	Tol. (%)	(FRL) (&)	(FRL) (&)	Manufacturer
RN^55@1003%&	100,000	1/10	C, N, R	H, J, K, C, E	B, D, F	S	P, R	ANG,DAL,IRC
RN^55@1013%&	101,000	1/10	C, N, R	H, J, K, C, E	B, D	S	P, R	ANG,DAL,IRC
RN^55@1023%&	102,000	1/10	C, N, R	H, J, K, C, E	B, D, F	S	P, R	ANG,DAL,IRC
RN^55@1043%&	104,000	1/10	C, N, R	H, J, K, C, E	B, D	S	P, R	ANG,DAL,IRC
RN^55@1053%&	105,000	1/10	C, N, R	H, J, K, C, E	B, D, F	S	P, R	ANG,DAL,IRC
RN^55@1063%&	106,000	1/10	C, N, R	H, J, K, C, E	B, D	S	P, R	ANG,DAL,IRC
RN^55@1073%&	107,000	1/10	C, N, R	H, J, K, C, E	B, D, F	S	P, R	ANG,DAL,IRC
	Resistance	Power	Term.	Char.	Res.	Level 1	Level 2	
Part Number	Value (Ohms)	Rating (W)	Type (^)	(@)	Tol. (%)	(FRL) (&)	(FRL) (&)	Manufacturer
RN^55@1093%&	109,000	1/10	C, N, R	H, J, K, C, E	B, D	S	P, R	ANG,DAL,IRC
RN^55@1103%&	110,000	1/10	C, N, R	H, J, K, C, E	B, D, F	S	P, R	ANG,DAL,IRC
RN^55@1113%&	111,000	1/10	C, N, R	H, J, K, C, E	B, D	S	P, R	ANG,DAL,IRC
RN^55@1133%&	113,000	1/10	C, N, R	H, J, K, C, E	B, D, F	S	P, R	ANG,DAL,IRC
RN^55@1143%&	114,000	1/10	C, N, R	H, J, K, C, E	B, D	S	P, R	ANG,DAL,IRC
RN^55@1153%&	115,000	1/10	C, N, R	H, J, K, C, E	B, D, F	S	P, R	ANG,DAL,IRC
RN^55@1173%&	117,000	1/10	C, N, R	H, J, K, C, E	B, D	S	P, R	ANG,DAL,IRC
	Resistance	Power	Term.	Char.	Res.	Level 1	Level 2	
Part Number	Value (Ohms)	Rating (W)	Type (^)	(@)	Tol. (%)	(FRL) (&)	(FRL) (&)	Manufacturer
RN^55@1183%&	118,000	1/10	C, N, R	H, J, K, C, E	B, D, F	S	P, R	ANG,DAL,IRC
RN^55@1203%&	120,000	1/10	C, N, R	H, J, K, C, E	B, D	S	P, R	ANG,DAL,IRC
RN^55@1213%&	121,000	1/10	C, N, R	H, J, K, C, E	B, D, F	S	P, R	ANG,DAL,IRC
RN^55@1233%&	123,000	1/10	C, N, R	H, J, K, C, E	B, D	S	P, R	ANG,DAL,IRC

RN^55@1243%&	124,000	1/10	C, N, R	H, J, K, C, E	B, D, F	S	P, R	ANG,DAL,IRC
RN^55@1263%&	126,000	1/10	C, N, R	H, J, K, C, E	B, D	S	P, R	ANG,DAL,IRC
RN^55@1273%&	127,000	1/10	C, N, R	H, J, K, C, E	B, D, F	S	P, R	ANG,DAL,IRC
	Resistance	Power	Term.	Char.	Res.	Level 1	Level 2	
Part Number	Value (Ohms)	Rating (W)	Type (^)	(@)	Tol. (%)	(FRL) (&)	(FRL) (&)	Manufacturer
RN^55@1293%&	129,000	1/10	C, N, R	H, J, K, C, E	B, D	S	P, R	ANG,DAL,IRC
RN^55@1303%&	130,000	1/10	C, N, R	H, J, K, C, E	B, D, F	S	P, R	ANG,DAL,IRC
RN^55@1323%&	132,000	1/10	C, N, R	H, J, K, C, E	B, D	S	P, R	ANG,DAL,IRC
RN^55@1333%&	133,000	1/10	C, N, R	H, J, K, C, E	B, D, F	S	P, R	ANG,DAL,IRC
RN^55@1353%&	135,000	1/10	C, N, R	H, J, K, C, E	B, D	S	P, R	ANG,DAL,IRC
RN^55@1373%&	137,000	1/10	C, N, R	H, J, K, C, E	B, D, F	S	P, R	ANG,DAL,IRC
RN^55@1383%&	138,000	1/10	C, N, R	H, J, K, C, E	B, D	S	P, R	ANG,DAL,IRC
	Resistance	Power	Term.	Char.	Res.	Level 1	Level 2	
Part Number	Value (Ohms)	Rating (W)	Type (^)	(@)	Tol. (%)	(FRL) (&)	(FRL) (&)	Manufacturer
RN^55@1403%&	140,000	1/10	C, N, R	H, J, K, C, E	B, D, F	S	P, R	ANG,DAL,IRC
RN^55@1423%&	142,000	1/10	C, N, R	H, J, K, C, E	B, D	S	P, R	ANG,DAL,IRC
RN^55@1433%&	143,000	1/10	C, N, R	H, J, K, C, E	B, D, F	S	P, R	ANG,DAL,IRC
RN^55@1453%&	145,000	1/10	C, N, R	H, J, K, C, E	B, D	S	P, R	ANG,DAL,IRC
RN^55@1473%&	147,000	1/10	C, N, R	H, J, K, C, E	B, D, F	S	P, R	ANG,DAL,IRC
RN^55@1493%&	149,000	1/10	C, N, R	H, J, K, C, E	B, D	S	P, R	ANG,DAL,IRC
RN^55@1503%&	150,000	1/10	C, N, R	H, J, K, C, E	B, D, F	S	P, R	ANG,DAL,IRC
	Resistance	Power	Term.	Char.	Res.	Level 1	Level 2	
Part Number	Value (Ohms)	Rating (W)	Type (^)	(@)	Tol. (%)	(FRL) (&)	(FRL) (&)	Manufacturer
RN^55@1523%&	152,000	1/10	C, N, R	H, J, K, C, E	B, D	S	P, R	ANG,DAL,IRC
RN^55@1543%&	154,000	1/10	C, N, R	H, J, K, C, E	B, D, F	S	P, R	ANG,DAL,IRC
RN^55@1563%&	156,000	1/10	C, N, R	H, J, K, C, E	B, D	S	P, R	ANG,DAL,IRC
RN^55@1583%&	158,000	1/10	C, N, R	H, J, K, C, E	B, D, F	S	P, R	ANG,DAL,IRC
RN^55@1603%&	160,000	1/10	C, N, R	H, J, K, C, E	B, D	S	P, R	ANG,DAL,IRC
RN^55@1623%&	162,000	1/10	C, N, R	H, J, K, C, E	B, D, F	S	P, R	ANG,DAL,IRC
RN^55@1643%&	164,000	1/10	C, N, R	H, J, K, C, E	B, D	S	P, R	ANG,DAL,IRC
	Resistance	Power	Term.	Char.	Res.	Level 1	Level 2	
Part Number	Value (Ohms)	Rating (W)	Type (^)	(@)	Tol. (%)	(FRL) (&)	(FRL) (&)	Manufacturer
RN^55@1653%&	165,000	1/10	C, N, R	H, J, K, C, E	B, D, F	S	P, R	ANG,DAL,IRC
RN^55@1673%&	167,000	1/10	C, N, R	H, J, K, C, E	B, D	S	P, R	ANG,DAL,IRC
RN^55@1693%&	169,000	1/10	C, N, R	H, J, K, C, E	B, D, F	S	P, R	ANG,DAL,IRC
RN^55@1723%&	172,000	1/10	C, N, R	H, J, K, C, E	B, D	S	P, R	ANG,DAL,IRC
RN^55@1743%&	174,000	1/10	C, N, R	H, J, K, C, E	B, D, F	S	P, R	ANG,DAL,IRC
RN^55@1763%&	176,000	1/10	C, N, R	H, J, K, C, E	B, D	S	P, R	ANG,DAL,IRC
RN^55@1783%&	178,000	1/10	C, N, R	H, J, K, C, E	B, D, F	S	P, R	ANG,DAL,IRC
	Resistance	Power	Term.	Char.	Res.	Level 1	Level 2	
Part Number	Value (Ohms)	Rating (W)	Type (^)	(@)	Tol. (%)	(FRL) (&)	(FRL) (&)	Manufacturer
RN^55@1803%&	180,000	1/10	C, N, R	H, J, K, C, E	B, D	S	P, R	ANG,DAL,IRC
RN^55@1823%&	182,000	1/10	C, N, R	H, J, K, C, E	B, D, F	S	P, R	ANG,DAL,IRC
RN^55@1843%&	184,000	1/10	C, N, R	H, J, K, C, E	B, D	S	P, R	ANG,DAL,IRC
RN^55@1873%&	187,000	1/10	C, N, R	H, J, K, C, E	B, D, F	S	P, R	ANG,DAL,IRC
RN^55@1893%&	189,000	1/10	C, N, R	H, J, K, C, E	B, D	S	P, R	ANG,DAL,IRC
RN^55@1913%&	191,000	1/10	C, N, R	H, J, K, C, E	B, D, F	S	P, R	ANG,DAL,IRC

RN^55@1933%&	193,000	1/10	C, N, R	H, J, K, C, E	B, D	S	P, R	ANG,DAL,IRC
	Resistance	Power	Term.	Char.	Res.	Level 1	Level 2	
Part Number	Value (Ohms)	Rating (W)	Type (^)	(@)	Tol. (%)	(FRL) (&)	(FRL) (&)	Manufacturer
RN^55@1963%&	196,000	1/10	C, N, R	H, J, K, C, E	B, D, F	S	P, R	ANG,DAL,IRC
RN^55@1983%&	198,000	1/10	C, N, R	H, J, K, C, E	B, D	S	P, R	ANG,DAL,IRC
RN^55@2003%&	200,000	1/10	C, N, R	H, J, K, C, E	B, D, F	S	P, R	ANG,DAL,IRC
RN^55@2033%&	203,000	1/10	C, N, R	H, J, K, C, E	B, D	S	P, R	ANG,DAL,IRC
RN^55@2053%&	205,000	1/10	C, N, R	H, J, K, C, E	B, D, F	S	P, R	ANG,DAL,IRC
RN^55@2083%&	208,000	1/10	C, N, R	H, J, K, C, E	B, D	S	P, R	ANG,DAL,IRC
RN^55@2103%&	210,000	1/10	C, N, R	H, J, K, C, E	B, D, F	S	P, R	ANG,DAL,IRC
	Resistance	Power	Term.	Char.	Res.	Level 1	Level 2	
Part Number	Value (Ohms)	Rating (W)	Type (^)	(@)	Tol. (%)	(FRL) (&)	(FRL) (&)	Manufacturer
RN^55@2133%&	213,000	1/10	C, N, R	H, J, K, C, E	B, D	S	P, R	ANG,DAL,IRC
RN^55@2153%&	215,000	1/10	C, N, R	H, J, K, C, E	B, D, F	S	P, R	ANG,DAL,IRC
RN^55@2183%&	218,000	1/10	C, N, R	H, J, K, C, E	B, D	S	P, R	ANG,DAL,IRC
RN^55@2213%&	221,000	1/10	C, N, R	H, J, K, C, E	B, D, F	S	P, R	ANG,DAL,IRC
RN^55@2233%&	223,000	1/10	C, N, R	H, J, K, C, E	B, D	S	P, R	ANG,DAL,IRC
RN^55@2263%&	226,000	1/10	C, N, R	H, J, K, C, E	B, D, F	S	P, R	ANG,DAL,IRC
RN^55@2293%&	229,000	1/10	C, N, R	H, J, K, C, E	B, D	S	P, R	ANG,DAL,IRC
	Resistance	Power	Term.	Char.	Res.	Level 1	Level 2	
Part Number	Value (Ohms)	Rating (W)	Type (^)	(@)	Tol. (%)	(FRL) (&)	(FRL) (&)	Manufacturer
RN^55@2323%&	232,000	1/10	C, N, R	H, J, K, C, E	B, D, F	S	P, R	ANG,DAL,IRC
RN^55@2343%&	234,000	1/10	C, N, R	H, J, K, C, E	B, D	S	P, R	ANG,DAL,IRC
RN^55@2373%&	237,000	1/10	C, N, R	H, J, K, C, E	B, D, F	S	P, R	ANG,DAL,IRC
RN^55@2403%&	240,000	1/10	C, N, R	H, J, K, C, E	B, D	S	P, R	ANG,DAL,IRC
RN^55@2433%&	243,000	1/10	C, N, R	H, J, K, C, E	B, D, F	S	P, R	ANG,DAL,IRC
RN^55@2463%&	246,000	1/10	C, N, R	H, J, K, C, E	B, D	S	P, R	ANG,DAL,IRC
RN^55@2493%&	249,000	1/10	C, N, R	H, J, K, C, E	B, D, F	S	P, R	ANG,DAL,IRC
	Resistance	Power	Term.	Char.	Res.	Level 1	Level 2	
Part Number	Value (Ohms)	Rating (W)	Type (^)	(@)	Tol. (%)	(FRL) (&)	(FRL) (&)	Manufacturer
RN^55@2523%&	252,000	1/10	C, N, R	H, J, K, C, E	B, D	S	P, R	ANG,DAL,IRC
RN^55@2553%&	255,000	1/10	C, N, R	H, J, K, C, E	B, D, F	S	P, R	ANG,DAL,IRC
RN^55@2583%&	258,000	1/10	C, N, R	H, J, K, C, E	B, D	S	P, R	ANG,DAL,IRC
RN^55@2613%&	261,000	1/10	C, N, R	H, J, K, C, E	B, D, F	S	P, R	ANG,DAL,IRC
RN^55@2643%&	264,000	1/10	C, N, R	H, J, K, C, E	B, D	S	P, R	ANG,DAL,IRC
RN^55@2673%&	267,000	1/10	C, N, R	H, J, K, C, E	B, D, F	S	P, R	ANG,DAL,IRC
RN^55@2713%&	271,000	1/10	C, N, R	H, J, K, C, E	B, D	S	P, R	ANG,DAL,IRC
	Resistance	Power	Term.	Char.	Res.	Level 1	Level 2	
Part Number	Value (Ohms)	Rating (W)	Type (^)	(@)	Tol. (%)	(FRL) (&)	(FRL) (&)	Manufacturer
RN^55@2743%&	274,000	1/10	C, N, R	H, J, K, C, E	B, D, F	S	P, R	ANG,DAL,IRC
RN^55@2773%&	277,000	1/10	C, N, R	H, J, K, C, E	B, D	S	P, R	ANG,DAL,IRC
RN^55@2803%&	280,000	1/10	C, N, R	H, J, K, C, E	B, D, F	S	P, R	ANG,DAL,IRC
RN^55@2843%&	284,000	1/10	C, N, R	H, J, K, C, E	B, D	S	P, R	ANG,DAL,IRC
RN^55@2873%&	287,000	1/10	C, N, R	H, J, K, C, E	B, D, F	S	P, R	ANG,DAL,IRC
RN^55@2913%&	291,000	1/10	C, N, R	H, J, K, C, E	B, D	S	P, R	ANG,DAL,IRC
RN^55@2943%&	294,000	1/10	C, N, R	H, J, K, C, E	B, D, F	S	P, R	ANG,DAL,IRC
	Resistance	Power	Term.	Char.	Res.	Level 1	Level 2	

Part Number	Value (Ohms)	Rating (W)	Type (^)	(@)	Tol. (%)	(FRL) (&)	(FRL) (&)	Manufacturer
RN^55@2983%&	298,000	1/10	C, N, R	H, J, K, C, E	B, D	S	P, R	ANG,DAL,IRC
RN^55@3013%&	301,000	1/10	C, N, R	H, J, K, C, E	B, D, F	S	P, R	ANG,DAL,IRC
RN^55@3053%&	305,000	1/10	C, N, R	H, J, K, C, E	B, D	S	P, R	ANG,DAL,IRC
RN^55@3093%&	309,000	1/10	C, N, R	H, J, K, C, E	B, D, F	S	P, R	ANG,DAL,IRC
RN^55@3123%&	312,000	1/10	C, N, R	H, J, K, C, E	B, D	S	P, R	ANG,DAL,IRC
RN^55@3163%&	316,000	1/10	C, N, R	H, J, K, C, E	B, D, F	S	P, R	ANG,DAL,IRC
RN^55@3203%&	320,000	1/10	C, N, R	H, J, K, C, E	B, D	S	P, R	ANG,DAL,IRC
	Resistance	Power	Term.	Char.	Res.	Level 1	Level 2	
Part Number	Value (Ohms)	Rating (W)	Type (^)	(@)	Tol. (%)	(FRL) (&)	(FRL) (&)	Manufacturer
RN^55@3243%&	324,000	1/10	C, N, R	H, J, K, C, E	B, D, F	S	P, R	ANG,DAL,IRC
RN^55@3283%&	328,000	1/10	C, N, R	H, J, K, C, E	B, D	S	P, R	ANG,DAL,IRC
RN^55@3323%&	332,000	1/10	C, N, R	H, J, K, C, E	B, D, F	S	P, R	ANG,DAL,IRC
RN^55@3363%&	336,000	1/10	C, N, R	H, J, K, C, E	B, D	S	P, R	ANG,DAL,IRC
RN^55@3403%&	340,000	1/10	C, N, R	H, J, K, C, E	B, D, F	S	P, R	ANG,DAL,IRC
RN^55@3443%&	344,000	1/10	C, N, R	H, J, K, C, E	B, D	S	P, R	ANG,DAL,IRC
RN^55@3483%&	348,000	1/10	C, N, R	H, J, K, C, E	B, D, F	S	P, R	ANG,DAL,IRC
	Resistance	Power	Term.	Char.	Res.	Level 1	Level 2	
Part Number	Value (Ohms)	Rating (W)	Type (^)	(@)	Tol. (%)	(FRL) (&)	(FRL) (&)	Manufacturer
RN^55@3523%&	352,000	1/10	C, N, R	H, J, K, C, E	B, D	S	P, R	ANG,DAL,IRC
RN^55@3573%&	357,000	1/10	C, N, R	H, J, K, C, E	B, D, F	S	P, R	ANG,DAL,IRC
RN^55@3613%&	361,000	1/10	C, N, R	H, J, K, C, E	B, D	S	P, R	ANG,DAL,IRC
RN^55@3653%&	365,000	1/10	C, N, R	H, J, K, C, E	B, D, F	S	P, R	ANG,DAL,IRC
RN^55@3703%&	370,000	1/10	C, N, R	H, J, K, C, E	B, D	S	P, R	ANG,DAL,IRC
RN^55@3743%&	374,000	1/10	C, N, R	H, J, K, C, E	B, D, F	S	P, R	ANG,DAL,IRC
RN^55@3793%&	379,000	1/10	C, N, R	H, J, K, C, E	B, D	S	P, R	ANG,DAL,IRC
	Resistance	Power	Term.	Char.	Res.	Level 1	Level 2	
Part Number	Value (Ohms)	Rating (W)	Type (^)	(@)	Tol. (%)	(FRL) (&)	(FRL) (&)	Manufacturer
RN^55@3833%&	383,000	1/10	C, N, R	H, J, K, C, E	B, D, F	S	P, R	ANG,DAL,IRC
RN^55@3883%&	388,000	1/10	C, N, R	H, J, K, C, E	B, D	S	P, R	ANG,DAL,IRC
RN^55@3923%&	392,000	1/10	C, N, R	H, J, K, C, E	B, D, F	S	P, R	ANG,DAL,IRC
RN^55@3973%&	397,000	1/10	C, N, R	H, J, K, C, E	B, D	S	P, R	ANG,DAL,IRC
RN^55@4023%&	402,000	1/10	C, N, R	H, J, K, C, E	B, D, F	S	P, R	ANG,DAL,IRC
RN^55@4073%&	407,000	1/10	C, N, R	H, J, K, C, E	B, D	S	P, R	ANG,DAL,IRC
RN^55@4123%&	412,000	1/10	C, N, R	H, J, K, C, E	B, D, F	S	P, R	ANG,DAL,IRC
	Resistance	Power	Term.	Char.	Res.	Level 1	Level 2	
Part Number	Value (Ohms)	Rating (W)	Type (^)	(@)	Tol. (%)	(FRL) (&)	(FRL) (&)	Manufacturer
RN^55@4173%&	417,000	1/10	C, N, R	H, J, K, C, E	B, D	S	P, R	ANG,DAL,IRC
RN^55@4223%&	422,000	1/10	C, N, R	H, J, K, C, E	B, D, F	S	P, R	ANG,DAL,IRC
RN^55@4273%&	427,000	1/10	C, N, R	H, J, K, C, E	B, D	S	P, R	ANG,DAL,IRC
RN^55@4323%&	432,000	1/10	C, N, R	H, J, K, C, E	B, D, F	S	P, R	ANG,DAL,IRC
RN^55@4373%&	437,000	1/10	C, N, R	H, J, K, C, E	B, D	S	P, R	ANG,DAL,IRC
RN^55@4423%&	442,000	1/10	C, N, R	H, J, K, C, E	B, D, F	S	P, R	ANG,DAL,IRC
RN^55@4483%&	448,000	1/10	C, N, R	H, J, K, C, E	B, D	S	P, R	ANG,DAL,IRC
	Resistance	Power	Term.	Char.	Res.	Level 1	Level 2	
Part Number	Value (Ohms)	Rating (W)	Type (^)	(@)	Tol. (%)	(FRL) (&)	(FRL) (&)	Manufacturer
RN^55@4533%&	453,000	1/10	C, N, R	H, J, K, C, E	B, D, F	S	P, R	ANG,DAL,IRC

RN^55@4593%&	459,000	1/10	C, N, R	H, J, K, C, E	B, D	S	P, R	ANG,DAL,IRC
RN^55@4643%&	464,000	1/10	C, N, R	H, J, K, C, E	B, D, F	S	P, R	ANG,DAL,IRC
RN^55@4703%&	470,000	1/10	C, N, R	H, J, K, C, E	B, D	S	P, R	ANG,DAL,IRC
RN^55@4753%&	475,000	1/10	C, N, R	H, J, K, C, E	B, D, F	S	P, R	ANG,DAL,IRC
RN^55@4813%&	481,000	1/10	C, N, R	H, J, K, C, E	B, D	S	P, R	ANG,DAL,IRC
RN^55@4873%&	487,000	1/10	C, N, R	H, J, K, C, E	B, D, F	S	P, R	ANG,DAL,IRC
	Resistance	Power	Term.	Char.	Res.	Level 1	Level 2	
Part Number	Value (Ohms)	Rating (W)	Type (^)	(@)	Tol. (%)	(FRL) (&)	(FRL) (&)	Manufacturer
RN^55@4933%&	493,000	1/10	C, N, R	H, J, K, C, E	B, D	S	P, R	ANG,DAL,IRC
RN^55@4993%&	499,000	1/10	C, N, R	H, J, K, C, E	B, D, F	S	P, R	ANG,DAL,IRC
RN^55@5053%&	505,000	1/10	C, N, R	H, J, K, C, E	B, D	S	P, R	ANG,DAL,IRC
RN^55@5113%&	511,000	1/10	C, N, R	H, J, K, C, E	B, D, F	S	P, R	ANG,DAL,IRC
RN^55@5173%&	517,000	1/10	C, N, R	H, J, K, C, E	B, D	S	P, R	ANG,DAL,IRC
RN^55@5233%&	523,000	1/10	C, N, R	H, J, K, C, E	B, D, F	S	P, R	ANG,DAL,IRC
RN^55@5303%&	530,000	1/10	C, N, R	H, J, K, C, E	B, D	S	P, R	ANG,DAL,IRC
	Resistance	Power	Term.	Char.	Res.	Level 1	Level 2	
Part Number	Value (Ohms)	Rating (W)	Type (^)	(@)	Tol. (%)	(FRL) (&)	(FRL) (&)	Manufacturer
RN^55@5363%&	536,000	1/10	C, N, R	H, J, K, C, E	B, D, F	S	P, R	ANG,DAL,IRC
RN^55@5423%&	542,000	1/10	C, N, R	H, J, K, C, E	B, D	S	P, R	ANG,DAL,IRC
RN^55@5493%&	549,000	1/10	C, N, R	H, J, K, C, E	B, D, F	S	P, R	ANG,DAL,IRC
RN^55@5563%&	556,000	1/10	C, N, R	H, J, K, C, E	B, D	S	P, R	ANG,DAL,IRC
RN^55@5623%&	562,000	1/10	C, N, R	H, J, K, C, E	B, D, F	S	P, R	ANG,DAL,IRC
RN^55@5693%&	569,000	1/10	C, N, R	H, J, K, C, E	B, D	S	P, R	ANG,DAL,IRC
RN^55@5763%&	576,000	1/10	C, N, R	H, J, K, C, E	B, D, F	S	P, R	ANG,DAL,IRC
	Resistance	Power	Term.	Char.	Res.	Level 1	Level 2	
Part Number	Value (Ohms)	Rating (W)	Type (^)	(@)	Tol. (%)	(FRL) (&)	(FRL) (&)	Manufacturer
RN^55@5833%&	583,000	1/10	C, N, R	H, J, K, C, E	B, D	S	P, R	ANG,DAL,IRC
RN^55@5903%&	590,000	1/10	C, N, R	H, J, K, C, E	B, D, F	S	P, R	ANG,DAL,IRC
RN^55@5973%&	597,000	1/10	C, N, R	H, J, K, C, E	B, D	S	P, R	ANG,DAL,IRC
RN^55@6043%&	604,000	1/10	C, N, R	H, J, K, C, E	B, D, F	S	P, R	ANG,DAL,IRC
RN^55@6123%&	612,000	1/10	C, N, R	H, J, K, C, E	B, D	S	P, R	ANG,DAL,IRC
RN^55@6193%&	619,000	1/10	C, N, R	H, J, K, C, E	B, D, F	S	P, R	ANG,DAL,IRC
RN^55@6263%&	626,000	1/10	C, N, R	H, J, K, C, E	B, D	S	P, R	ANG,DAL,IRC
	Resistance	Power	Term.	Char.	Res.	Level 1	Level 2	
Part Number	Value (Ohms)	Rating (W)	Type (^)	(@)	Tol. (%)	(FRL) (&)	(FRL) (&)	Manufacturer
RN^55@6343%&	634,000	1/10	C, N, R	H, J, K, C, E	B, D, F	S	P, R	ANG,DAL,IRC
RN^55@6423%&	642,000	1/10	C, N, R	H, J, K, C, E	B, D	S	P, R	ANG,DAL,IRC
RN^55@6493%&	649,000	1/10	C, N, R	H, J, K, C, E	B, D, F	S	P, R	ANG,DAL,IRC
RN^55@6573%&	657,000	1/10	C, N, R	H, J, K, C, E	B, D	S	P, R	ANG,DAL,IRC
RN^55@6653%&	665,000	1/10	C, N, R	H, J, K, C, E	B, D, F	S	P, R	ANG,DAL,IRC
RN^55@6733%&	673,000	1/10	C, N, R	H, J, K, C, E	B, D	S	P, R	ANG,DAL,IRC
RN^55@6813%&	681,000	1/10	C, N, R	H, J, K, C, E	B, D, F	S	P, R	ANG,DAL,IRC
	Resistance	Power	Term.	Char.	Res.	Level 1	Level 2	
Part Number	Value (Ohms)	Rating (W)	Type (^)	(@)	Tol. (%)	(FRL) (&)	(FRL) (&)	Manufacturer
RN^55@6903%&	690,000	1/10	C, N, R	H, J, K, C, E	B, D	S	P, R	ANG,DAL,IRC
RN^55@6983%&	698,000	1/10	C, N, R	H, J, K, C, E	B, D, F	S	P, R	ANG,DAL,IRC
RN^55@7063%&	706,000	1/10	C, N, R	H, J, K, C, E	B, D	S	P, R	ANG,DAL,IRC

RN^55@7153%&	715,000	1/10	C, N, R	H, J, K, C, E	B, D, F	S	P, R	ANG,DAL,IRC
RN^55@7233%&	723,000	1/10	C, N, R	H, J, K, C, E	B, D	S	P, R	ANG,DAL,IRC
RN^55@7323%&	732,000	1/10	C, N, R	H, J, K, C, E	B, D, F	S	P, R	ANG,DAL,IRC
RN^55@7413%&	741,000	1/10	C, N, R	H, J, K, C, E	B, D	S	P, R	ANG,DAL,IRC
	Resistance	Power	Term.	Char.	Res.	Level 1	Level 2	
Part Number	Value (Ohms)	Rating (W)	Type (^)	(@)	Tol. (%)	(FRL) (&)	(FRL) (&)	Manufacturer
RN^55@7503%&	750,000	1/10	C, N, R	H, J, K, C, E	B, D, F	S	P, R	ANG,DAL,IRC
RN^55@7593%&	759,000	1/10	C, N, R	H, J, K, C, E	B, D	S	P, R	ANG,DAL,IRC
RN^55@7683%&	768,000	1/10	C, N, R	H, J, K, C, E	B, D, F	S	P, R	ANG,DAL,IRC
RN^55@7773%&	777,000	1/10	C, N, R	H, J, K, C, E	B, D	S	P, R	ANG,DAL,IRC
RN^55@7873%&	787,000	1/10	C, N, R	H, J, K, C, E	B, D, F	S	P, R	ANG,DAL,IRC
RN^55@7963%&	796,000	1/10	C, N, R	H, J, K, C, E	B, D	S	P, R	ANG,DAL,IRC
RN^55@8063%&	806,000	1/10	C, N, R	H, J, K, C, E	B, D, F	S	P, R	ANG,DAL,IRC
	Resistance	Power	Term.	Char.	Res.	Level 1	Level 2	
Part Number	Value (Ohms)	Rating (W)	Type (^)	(@)	Tol. (%)	(FRL) (&)	(FRL) (&)	Manufacturer
RN^55@8163%&	816,000	1/10	C, N, R	H, J, K, C, E	B, D	S	P, R	ANG,DAL,IRC
RN^55@8253%&	825,000	1/10	C, N, R	H, J, K, C, E	B, D, F	S	P, R	ANG,DAL,IRC
RN^55@8353%&	835,000	1/10	C, N, R	H, J, K, C, E	B, D	S	P, R	ANG,DAL,IRC
RN^55@8453%&	845,000	1/10	C, N, R	H, J, K, C, E	B, D, F	S	P, R	ANG,DAL,IRC
RN^55@8563%&	856,000	1/10	C, N, R	H, J, K, C, E	B, D	S	P, R	ANG,DAL,IRC
RN^55@8663%&	866,000	1/10	C, N, R	H, J, K, C, E	B, D, F	S	P, R	ANG,DAL,IRC
RN^55@8763%&	876,000	1/10	C, N, R	H, J, K, C, E	B, D	S	P, R	ANG,DAL,IRC
	Resistance	Power	Term.	Char.	Res.	Level 1	Level 2	
Part Number	Value (Ohms)	Rating (W)	Type (^)	(@)	Tol. (%)	(FRL) (&)	(FRL) (&)	Manufacturer
RN^55@8873%&	887,000	1/10	C, N, R	H, J, K, C, E	B, D, F	S	P, R	ANG,DAL,IRC
RN^55@8983%&	898,000	1/10	C, N, R	H, J, K, C, E	B, D	S	P, R	ANG,DAL,IRC
RN^55@9093%&	909,000	1/10	C, N, R	H, J, K, C, E	B, D, F	S	P, R	ANG,DAL,IRC
RN^55@9203%&	920,000	1/10	C, N, R	H, J, K, C, E	B, D	S	P, R	ANG,DAL,IRC
RN^55@9313%&	931,000	1/10	C, N, R	H, J, K, C, E	B, D, F	S	P, R	ANG,DAL,IRC
RN^55@9423%&	942,000	1/10	C, N, R	H, J, K, C, E	B, D	S	P, R	ANG,DAL,IRC
RN^55@9533%&	953,000	1/10	C, N, R	H, J, K, C, E	B, D, F	S	P, R	ANG,DAL,IRC
	Resistance	Power	Term.	Char.	Res.	Level 1	Level 2	
Part Number	Value (Ohms)	Rating (W)	Type (^)	(@)	Tol. (%)	(FRL) (&)	(FRL) (&)	Manufacturer
RN^55@9653%&	965,000	1/10	C, N, R	H, J, K, C, E	B, D	S	P, R	ANG,DAL,IRC
RN^55@9763%&	976,000	1/10	C, N, R	H, J, K, C, E	B, D, F	S	P, R	ANG,DAL,IRC
RN^55@9883%&	988,000	1/10	C, N, R	H, J, K, C, E	B, D	S	P, R	ANG,DAL,IRC

RN^55 Film Resistors: 1,000,000 Ohms through 2,000,000 Ohms

	Resistance	Power	Term.	Char.	Res.	Level 1	Level 2	
Part Number	Value (Ohms)	Rating (W)	Type (^)	(@)	Tol. (%)	(FRL) (&)	(FRL) (&)	Manufacturer
RN^55@1004%&	1,000,000	1/10	C, N, R	H, J, K, C, E	B, D, F	S	P, R	ANG,DAL,IRC
RN^55@1014%&	1,010,000	1/10	C, N, R	H, J, K, C, E	B, D	S	P, R	ANG,DAL,IRC
RN^55@1024%&	1,020,000	1/10	C, N, R	H, J, K, C, E	B, D, F	S	P, R	ANG,DAL,IRC
RN^55@1044%&	1,040,000	1/10	C, N, R	H, J, K, C, E	B, D	S	P, R	ANG,DAL,IRC

RN^55@1054%&	1,050,000	1/10	C, N, R	H, J, K, C, E	B, D, F	S	P, R	ANG,DAL,IRC
RN^55@1064%&	1,060,000	1/10	C, N, R	H, J, K, C, E	B, D	S	P, R	ANG,DAL,IRC
RN^55@1074%&	1,070,000	1/10	C, N, R	H, J, K, C, E	B, D, F	S	P, R	ANG,DAL,IRC
	Resistance	Power	Term.	Char.	Res.	Level 1	Level 2	
Part Number	Value (Ohms)	Rating (W)	Type (^)	(@)	Tol. (%)	(FRL) (&)	(FRL) (&)	Manufacturer
RN^55@1094%&	1,090,000	1/10	C, N, R	H, J, K, C, E	B, D	S	P, R	ANG,DAL,IRC
RN^55@1104%&	1,100,000	1/10	C, N, R	H, J, K, C, E	B, D, F	S	P, R	ANG,DAL,IRC
RN^55@1114%&	1,110,000	1/10	C, N, R	H, J, K, C, E	B, D	S	P, R	ANG,DAL,IRC
RN^55@1134%&	1,130,000	1/10	C, N, R	H, J, K, C, E	B, D, F	S	P, R	ANG,DAL,IRC
RN^55@1144%&	1,140,000	1/10	C, N, R	H, J, K, C, E	B, D	S	P, R	ANG,DAL,IRC
RN^55@1154%&	1,150,000	1/10	C, N, R	H, J, K, C, E	B, D, F	S	P, R	ANG,DAL,IRC
RN^55@1174%&	1,170,000	1/10	C, N, R	H, J, K, C, E	B, D	S	P, R	ANG,DAL,IRC
	Resistance	Power	Term.	Char.	Res.	Level 1	Level 2	
Part Number	Value (Ohms)	Rating (W)	Type (^)	(@)	Tol. (%)	(FRL) (&)	(FRL) (&)	Manufacturer
RN^55@1184%&	1,180,000	1/10	C, N, R	H, J, K, C, E	B, D, F	S	P, R	ANG,DAL,IRC
RN^55@1204%&	1,200,000	1/10	C, N, R	H, J, K, C, E	B, D	S	P, R	ANG,DAL,IRC
RN^55@1214%&	1,210,000	1/10	C, N, R	H, J, K, C, E	B, D, F	S	P, R	ANG,DAL,IRC
RN^55@1234%&	1,230,000	1/10	C, N, R	H, J, K, C, E	B, D	S	P, R	DAL, IRC
RN^55@1244%&	1,240,000	1/10	C, N, R	H, J, K, C, E	B, D, F	S	P, R	DAL, IRC
RN^55@1264%&	1,260,000	1/10	C, N, R	H, J, K, C, E	B, D	S	P, R	DAL, IRC
RN^55@1274%&	1,270,000	1/10	C, N, R	H, J, K, C, E	B, D, F	S	P, R	DAL, IRC
	Resistance	Power	Term.	Char.	Res.	Level 1	Level 2	
Part Number	Value (Ohms)	Rating (W)	Type (^)	(@)	Tol. (%)	(FRL) (&)	(FRL) (&)	Manufacturer
RN^55@1294%&	1,290,000	1/10	C, N, R	H, J, K, C, E	B, D	S	P, R	DAL, IRC
RN^55@1304%&	1,300,000	1/10	C, N, R	H, J, K, C, E	B, D, F	S	P, R	DAL, IRC
RN^55@1324%&	1,320,000	1/10	C, N, R	H, J, K, C, E	B, D	S	P, R	DAL, IRC
RN^55@1334%&	1,330,000	1/10	C, N, R	H, J, K, C, E	B, D, F	S	P, R	DAL, IRC
RN^55@1354%&	1,350,000	1/10	C, N, R	H, J, K, C, E	B, D	S	P, R	DAL, IRC
RN^55@1374%&	1,370,000	1/10	C, N, R	H, J, K, C, E	B, D, F	S	P, R	DAL, IRC
RN^55@1384%&	1,380,000	1/10	C, N, R	H, J, K, C, E	B, D	S	P, R	DAL, IRC
	Resistance	Power	Term.	Char.	Res.	Level 1	Level 2	
Part Number	Value (Ohms)	Rating (W)	Type (^)	(@)	Tol. (%)	(FRL) (&)	(FRL) (&)	Manufacturer
RN^55@1404%&	1,400,000	1/10	C, N, R	H, J, K, C, E	B, D, F	S	P, R	DAL, IRC
RN^55@1424%&	1,420,000	1/10	C, N, R	H, J, K, C, E	B, D	S	P, R	DAL, IRC
RN^55@1434%&	1,430,000	1/10	C, N, R	H, J, K, C, E	B, D, F	S	P, R	DAL, IRC
RN^55@1454%&	1,450,000	1/10	C, N, R	H, J, K, C, E	B, D	S	P, R	DAL, IRC
RN^55@1474%&	1,470,000	1/10	C, N, R	H, J, K, C, E	B, D, F	S	P, R	DAL, IRC
RN^55@1494%&	1,490,000	1/10	C, N, R	H, J, K, C, E	B, D	S	P, R	DAL, IRC
RN^55@1504%&	1,500,000	1/10	C, N, R	H, J, K, C, E	B, D, F	S	P, R	DAL, IRC
	Resistance	Power	Term.	Char.	Res.	Level 1	Level 2	
Part Number	Value (Ohms)	Rating (W)	Type (^)	(@)	Tol. (%)	(FRL) (&)	(FRL) (&)	Manufacturer
RN^55@1524%&	1,520,000	1/10	C, N, R	H, J, K, C, E	B, D	S	P, R	DAL, IRC
RN^55@1544%&	1,540,000	1/10	C, N, R	H, J, K, C, E	B, D, F	S	P, R	DAL, IRC
RN^55@1564%&	1,560,000	1/10	C, N, R	H, J, K, C, E	B, D	S	P, R	DAL, IRC
RN^55@1584%&	1,580,000	1/10	C, N, R	H, J, K, C, E	B, D, F	S	P, R	DAL, IRC
RN^55@1604%&	1,600,000	1/10	C, N, R	H, J, K, C, E	B, D	S	P, R	DAL, IRC
RN^55@1624%&	1,620,000	1/10	C, N, R	H, J, K, C, E	B, D, F	S	P, R	DAL, IRC

RN^55@1644%&	1,640,000	1/10	C, N, R	H, J, K, C, E	B, D	S	P, R	DAL, IRC
	Resistance	Power	Term.	Char.	Res.	Level 1	Level 2	
Part Number	Value (Ohms)	Rating (W)	Type (^)	(@)	Tol. (%)	(FRL) (&)	(FRL) (&)	Manufacturer
RN^55@1654%&	1,650,000	1/10	C, N, R	H, J, K, C, E	B, D, F	S	P, R	DAL, IRC
RN^55@1674%&	1,670,000	1/10	C, N, R	H, J, K, C, E	B, D	S	P, R	DAL, IRC
RN^55@1694%&	1,690,000	1/10	C, N, R	H, J, K, C, E	B, D, F	S	P, R	DAL, IRC
RN^55@1724%&	1,720,000	1/10	C, N, R	H, J, K, C, E	B, D	S	P, R	DAL, IRC
RN^55@1744%&	1,740,000	1/10	C, N, R	H, J, K, C, E	B, D, F	S	P, R	DAL, IRC
RN^55@1764%&	1,760,000	1/10	C, N, R	H, J, K, C, E	B, D	S	P, R	DAL, IRC
RN^55@1784%&	1,780,000	1/10	C, N, R	H, J, K, C, E	B, D, F	S	P, R	DAL, IRC
	Resistance	Power	Term.	Char.	Res.	Level 1	Level 2	
Part Number	Value (Ohms)	Rating (W)	Type (^)	(@)	Tol. (%)	(FRL) (&)	(FRL) (&)	Manufacturer
RN^55@1804%&	1,800,000	1/10	C, N, R	H, J, K, C, E	B, D	S	P, R	DAL, IRC
RN^55@1824%&	1,820,000	1/10	C, N, R	H, J, K, C, E	B, D, F	S	P, R	DAL, IRC
RN^55@1844%&	1,840,000	1/10	C, N, R	H, J, K, C, E	B, D	S	P, R	DAL, IRC
RN^55@1874%&	1,870,000	1/10	C, N, R	H, J, K, C, E	B, D, F	S	P, R	DAL, IRC
RN^55@1894%&	1,890,000	1/10	C, N, R	H, J, K, C, E	B, D	S	P, R	DAL, IRC
RN^55@1914%&	1,910,000	1/10	C, N, R	H, J, K, C, E	B, D, F	S	P, R	DAL, IRC
RN^55@1934%&	1,930,000	1/10	C, N, R	H, J, K, C, E	B, D	S	P, R	DAL, IRC
	Resistance	Power	Term.	Char.	Res.	Level 1	Level 2	
Part Number	Value (Ohms)	Rating (W)	Type (^)	(@)	Tol. (%)	(FRL) (&)	(FRL) (&)	Manufacturer
RN^55@1964%&	1,960,000	1/10	C, N, R	H, J, K, C, E	B, D, F	S	P, R	DAL, IRC
RN^55@1984%&	1,980,000	1/10	C, N, R	H, J, K, C, E	B, D	S	P, R	DAL, IRC
RN^55@2004%&	2,000,000	1/10	C, N, R	H, J, K, C, E	B, D, F	S	P, R	DAL, IRC
	Resistance	Power	Term.	Char.	Res.	Level 1	Level 2	
Part Number	Value (Ohms)	Rating (W)	Type (^)	(@)	Tol. (%)	(FRL) (&)	(FRL) (&)	Manufacturer
	Resistance	Power	Term.	Char.	Res.	Level 1	Level 2	
Part Number	Value (Ohms)	Rating (W)	Type (^)	(@)	Tol. (%)	(FRL) (&)	(FRL) (&)	Manufacturer
	Resistance	Power	Term.	Char.	Res.	Level 1	Level 2	
Part Number	Value (Ohms)	Rating (W)	Type (^)	(@)	Tol. (%)	(FRL) (&)	(FRL) (&)	Manufacturer
	Resistance	Power	Term.	Char.	Res.	Level 1	Level 2	
Part Number	Value (Ohms)	Rating (W)	Type (^)	(@)	Tol. (%)	(FRL) (&)	(FRL) (&)	Manufacturer
	Resistance	Power	Term.	Char.	Res.	Level 1	Level 2	
Part Number	Value (Ohms)	Rating (W)	Type (^)	(@)	Tol. (%)	(FRL) (&)	(FRL) (&)	Manufacturer
	Resistance	Power	Term.	Char.	Res.	Level 1	Level 2	
Part Number	Value (Ohms)	Rating (W)	Type (^)	(@)	Tol. (%)	(FRL) (&)	(FRL) (&)	Manufacturer
	Resistance	Power	Term.	Char.	Res.	Level 1	Level 2	
Part Number	Value (Ohms)	Rating (W)	Type (^)	(@)	Tol. (%)	(FRL) (&)	(FRL) (&)	Manufacturer
	Resistance	Power	Term.	Char.	Res.	Level 1	Level 2	
Part Number	Value (Ohms)	Rating (W)	Type (^)	(@)	Tol. (%)	(FRL) (&)	(FRL) (&)	Manufacturer
	Resistance	Power	Term.	Char.	Res.	Level 1	Level 2	
Part Number	Value (Ohms)	Rating (W)	Type (^)	(@)	Tol. (%)	(FRL) (&)	(FRL) (&)	Manufacturer
	Resistance	Power	Term.	Char.	Res.	Level 1	Level 2	

Part Number	Value (Ohms)	Rating (W)	Type (^)	(@)	Tol. (%)	(FRL) (&)	(FRL) (&)	Manufacturer
	Resistance	Power	Term.	Char.	Res.	Level 1	Level 2	
Part Number	Value (Ohms)	Rating (W)	Type (^)	(@)	Tol. (%)	(FRL) (&)	(FRL) (&)	Manufacturer
	Resistance	Power	Term.	Char.	Res.	Level 1	Level 2	
Part Number	Value (Ohms)	Rating (W)	Type (^)	(@)	Tol. (%)	(FRL) (&)	(FRL) (&)	Manufacturer
	Resistance	Power	Term.	Char.	Res.	Level 1	Level 2	
Part Number	Value (Ohms)	Rating (W)	Type (^)	(@)	Tol. (%)	(FRL) (&)	(FRL) (&)	Manufacturer
	Resistance	Power	Term.	Char.	Res.	Level 1	Level 2	
Part Number	Value (Ohms)	Rating (W)	Type (^)	(@)	Tol. (%)	(FRL) (&)	(FRL) (&)	Manufacturer
	Resistance	Power	Term.	Char.	Res.	Level 1	Level 2	
Part Number	Value (Ohms)	Rating (W)	Type (^)	(@)	Tol. (%)	(FRL) (&)	(FRL) (&)	Manufacturer
	Resistance	Power	Term.	Char.	Res.	Level 1	Level 2	
Part Number	Value (Ohms)	Rating (W)	Type (^)	(@)	Tol. (%)	(FRL) (&)	(FRL) (&)	Manufacturer
	Resistance	Power	Term.	Char.	Res.	Level 1	Level 2	
Part Number	Value (Ohms)	Rating (W)	Type (^)	(@)	Tol. (%)	(FRL) (&)	(FRL) (&)	Manufacturer

RN^60 Film Resistors

	Resistance	Power	Term.	Char.	Res.	Level 1	Level 2	
Part Number	Value (Ohms)	Rating (W)	Type (^)	(@)	Tol. (%)	(FRL) (&)	(FRL) (&)	Manufacturer
RN^60@10R0%&	10.0	1/8	C, N, R	H, J, K, C, E	B, D, F	S	P, R	ANG,DAL,IRC
RN^60@10R1%&	10.1	1/8	C, N, R	H, J, K, C, E	B, D	S	P, R	ANG,DAL,IRC
RN^60@10R2%&	10.2	1/8	C, N, R	H, J, K, C, E	B, D, F	S	P, R	ANG,DAL,IRC
RN^60@10R4%&	10.4	1/8	C, N, R	H, J, K, C, E	B, D	S	P, R	ANG,DAL,IRC
RN^60@10R5%&	10.5	1/8	C, N, R	H, J, K, C, E	B, D, F	S	P, R	ANG,DAL,IRC
RN^60@10R6%&	10.6	1/8	C, N, R	H, J, K, C, E	B, D	S	P, R	ANG,DAL,IRC
RN^60@10R7%&	10.7	1/8	C, N, R	H, J, K, C, E	B, D, F	S	P, R	ANG,DAL,IRC
RN^60@10R9%&	10.9	1/8	C, N, R	H, J, K, C, E	B, D	S	P, R	ANG,DAL,IRC
RN^60@11R0%&	11.0	1/8	C, N, R	H, J, K, C, E	B, D, F	S	P, R	ANG,DAL,IRC
RN^60@11R1%&	11.1	1/8	C, N, R	H, J, K, C, E	B, D	S	P, R	ANG,DAL,IRC
RN^60@11R3%&	11.3	1/8	C, N, R	H, J, K, C, E	B, D, F	S	P, R	ANG,DAL,IRC
RN^60@11R4%&	11.4	1/8	C, N, R	H, J, K, C, E	B, D	S	P, R	ANG,DAL,IRC
RN^60@11R5%&	11.5	1/8	C, N, R	H, J, K, C, E	B, D, F	S	P, R	ANG,DAL,IRC
RN^60@11R7%&	11.7	1/8	C, N, R	H, J, K, C, E	B, D	S	P, R	ANG,DAL,IRC
RN^60@11R8%&	11.8	1/8	C, N, R	H, J, K, C, E	B, D, F	S	P, R	ANG,DAL,IRC
RN^60@12R0%&	12.0	1/8	C, N, R	H, J, K, C, E	B, D	S	P, R	ANG,DAL,IRC
RN^60@12R1%&	12.1	1/8	C, N, R	H, J, K, C, E	B, D, F	S	P, R	ANG,DAL,IRC
RN^60@12R3%&	12.3	1/8	C, N, R	H, J, K, C, E	B, D	S	P, R	ANG,DAL,IRC
RN^60@12R4%&	12.4	1/8	C, N, R	H, J, K, C, E	B, D, F	S	P, R	ANG,DAL,IRC
RN^60@12R6%&	12.6	1/8	C, N, R	H, J, K, C, E	B, D	S	P, R	ANG,DAL,IRC
RN^60@12R7%&	12.7	1/8	C, N, R	H, J, K, C, E	B, D, F	S	P, R	ANG,DAL,IRC
RN^60@12R9%&	12.9	1/8	C, N, R	H, J, K, C, E	B, D	S	P, R	ANG,DAL,IRC
RN^60@13R0%&	13.0	1/8	C, N, R	H, J, K, C, E	B, D, F	S	P, R	ANG,DAL,IRC
RN^60@13R2%&	13.2	1/8	C, N, R	H, J, K, C, E	B, D	S	P, R	ANG,DAL,IRC
RN^60@13R3%&	13.3	1/8	C, N, R	H, J, K, C, E	B, D, F	S	P, R	ANG,DAL,IRC

RN^60@13R5%&	13.5	1/8	C, N, R	H, J, K, C, E	B, D	S	P, R	ANG,DAL,IRC
RN^60@13R7%&	13.7	1/8	C, N, R	H, J, K, C, E	B, D, F	S	P, R	ANG,DAL,IRC
RN^60@13R8%&	13.8	1/8	C, N, R	H, J, K, C, E	B, D	S	P, R	ANG,DAL,IRC
RN^60@14R0%&	14.0	1/8	C, N, R	H, J, K, C, E	B, D, F	S	P, R	ANG,DAL,IRC
RN^60@14R2%&	14.2	1/8	C, N, R	H, J, K, C, E	B, D	S	P, R	ANG,DAL,IRC
RN^60@14R3%&	14.3	1/8	C, N, R	H, J, K, C, E	B, D, F	S	P, R	ANG,DAL,IRC
RN^60@14R5%&	14.5	1/8	C, N, R	H, J, K, C, E	B, D	S	P, R	ANG,DAL,IRC
RN^60@14R7%&	14.7	1/8	C, N, R	H, J, K, C, E	B, D, F	S	P, R	ANG,DAL,IRC
RN^60@14R9%&	14.9	1/8	C, N, R	H, J, K, C, E	B, D	S	P, R	ANG,DAL,IRC
RN^60@15R0%&	15.0	1/8	C, N, R	H, J, K, C, E	B, D, F	S	P, R	ANG,DAL,IRC
RN^60@15R2%&	15.2	1/8	C, N, R	H, J, K, C, E	B, D	S	P, R	ANG,DAL,IRC
RN^60@15R4%&	15.4	1/8	C, N, R	H, J, K, C, E	B, D, F	S	P, R	ANG,DAL,IRC
RN^60@15R6%&	15.6	1/8	C, N, R	H, J, K, C, E	B, D	S	P, R	ANG,DAL,IRC
RN^60@15R8%&	15.8	1/8	C, N, R	H, J, K, C, E	B, D, F	S	P, R	ANG,DAL,IRC
RN^60@16R0%&	16.0	1/8	C, N, R	H, J, K, C, E	B, D	S	P, R	ANG,DAL,IRC
RN^60@16R2%&	16.2	1/8	C, N, R	H, J, K, C, E	B, D, F	S	P, R	ANG,DAL,IRC
RN^60@16R4%&	16.4	1/8	C, N, R	H, J, K, C, E	B, D	S	P, R	ANG,DAL,IRC
RN^60@16R5%&	16.5	1/8	C, N, R	H, J, K, C, E	B, D, F	S	P, R	ANG,DAL,IRC
RN^60@16R7%&	16.7	1/8	C, N, R	H, J, K, C, E	B, D	S	P, R	ANG,DAL,IRC
RN^60@16R9%&	16.9	1/8	C, N, R	H, J, K, C, E	B, D, F	S	P, R	ANG,DAL,IRC
RN^60@17R2%&	17.2	1/8	C, N, R	H, J, K, C, E	B, D	S	P, R	ANG,DAL,IRC
RN^60@17R4%&	17.4	1/8	C, N, R	H, J, K, C, E	B, D, F	S	P, R	ANG,DAL,IRC
RN^60@17R6%&	17.6	1/8	C, N, R	H, J, K, C, E	B, D	S	P, R	ANG,DAL,IRC
RN^60@17R8%&	17.8	1/8	C, N, R	H, J, K, C, E	B, D, F	S	P, R	ANG,DAL,IRC
RN^60@18R0%&	18.0	1/8	C, N, R	H, J, K, C, E	B, D	S	P, R	ANG,DAL,IRC
RN^60@18R2%&	18.2	1/8	C, N, R	H, J, K, C, E	B, D, F	S	P, R	ANG,DAL,IRC
RN^60@18R4%&	18.4	1/8	C, N, R	H, J, K, C, E	B, D	S	P, R	ANG,DAL,IRC
RN^60@18R7%&	18.7	1/8	C, N, R	H, J, K, C, E	B, D, F	S	P, R	ANG,DAL,IRC
RN^60@18R9%&	18.9	1/8	C, N, R	H, J, K, C, E	B, D	S	P, R	ANG,DAL,IRC
RN^60@19R1%&	19.1	1/8	C, N, R	H, J, K, C, E	B, D, F	S	P, R	ANG,DAL,IRC
RN^60@19R3%&	19.3	1/8	C, N, R	H, J, K, C, E	B, D	S	P, R	ANG,DAL,IRC
RN^60@19R6%&	19.6	1/8	C, N, R	H, J, K, C, E	B, D, F	S	P, R	ANG,DAL,IRC
RN^60@19R8%&	19.8	1/8	C, N, R	H, J, K, C, E	B, D	S	P, R	ANG,DAL,IRC
RN^60@20R0%&	20.0	1/8	C, N, R	H, J, K, C, E	B, D, F	S	P, R	ANG,DAL,IRC
RN^60@20R3%&	20.3	1/8	C, N, R	H, J, K, C, E	B, D	S	P, R	ANG,DAL,IRC
RN^60@20R5%&	20.5	1/8	C, N, R	H, J, K, C, E	B, D, F	S	P, R	ANG,DAL,IRC
RN^60@20R8%&	20.8	1/8	C, N, R	H, J, K, C, E	B, D	S	P, R	ANG,DAL,IRC
RN^60@21R0%&	21.0	1/8	C, N, R	H, J, K, C, E	B, D, F	S	P, R	ANG,DAL,IRC
RN^60@21R3%&	21.3	1/8	C, N, R	H, J, K, C, E	B, D	S	P, R	ANG,DAL,IRC
RN^60@21R5%&	21.5	1/8	C, N, R	H, J, K, C, E	B, D, F	S	P, R	ANG,DAL,IRC
RN^60@21R8%&	21.8	1/8	C, N, R	H, J, K, C, E	B, D	S	P, R	ANG,DAL,IRC
RN^60@22R1%&	22.1	1/8	C, N, R	H, J, K, C, E	B, D, F	S	P, R	ANG,DAL,IRC
RN^60@22R3%&	22.3	1/8	C, N, R	H, J, K, C, E	B, D	S	P, R	ANG,DAL,IRC
RN^60@22R6%&	22.6	1/8	C, N, R	H, J, K, C, E	B, D, F	S	P, R	ANG,DAL,IRC
RN^60@22R9%&	22.9	1/8	C, N, R	H, J, K, C, E	B, D	S	P, R	ANG,DAL,IRC
RN^60@23R2%&	23.2	1/8	C, N, R	H, J, K, C, E	B, D, F	S	P, R	ANG,DAL,IRC
RN^60@23R4%&	23.4	1/8	C, N, R	H, J, K, C, E	B, D	S	P, R	ANG,DAL,IRC

RN^60@23R7%&	23.7	1/8	C, N, R	H, J, K, C, E	B, D, F	S	P, R	ANG,DAL,IRC
RN^60@24R0%&	24.0	1/8	C, N, R	H, J, K, C, E	B, D	S	P, R	ANG,DAL,IRC
RN^60@24R3%&	24.3	1/8	C, N, R	H, J, K, C, E	B, D, F	S	P, R	ANG,DAL,IRC
RN^60@24R6%&	24.6	1/8	C, N, R	H, J, K, C, E	B, D	S	P, R	ANG,DAL,IRC
RN^60@24R9%&	24.9	1/8	C, N, R	H, J, K, C, E	B, D, F	S	P, R	ANG,DAL,IRC
RN^60@25R2%&	25.2	1/8	C, N, R	H, J, K, C, E	B, D	S	P, R	ANG,DAL,IRC
RN^60@25R5%&	25.5	1/8	C, N, R	H, J, K, C, E	B, D, F	S	P, R	ANG,DAL,IRC
RN^60@25R8%&	25.8	1/8	C, N, R	H, J, K, C, E	B, D	S	P, R	ANG,DAL,IRC
RN^60@26R1%&	26.1	1/8	C, N, R	H, J, K, C, E	B, D, F	S	P, R	ANG,DAL,IRC
RN^60@26R4%&	26.4	1/8	C, N, R	H, J, K, C, E	B, D	S	P, R	ANG,DAL,IRC
RN^60@26R7%&	26.7	1/8	C, N, R	H, J, K, C, E	B, D, F	S	P, R	ANG,DAL,IRC
RN^60@27R1%&	27.1	1/8	C, N, R	H, J, K, C, E	B, D	S	P, R	ANG,DAL,IRC
RN^60@27R4%&	27.4	1/8	C, N, R	H, J, K, C, E	B, D, F	S	P, R	ANG,DAL,IRC
RN^60@27R7%&	27.7	1/8	C, N, R	H, J, K, C, E	B, D	S	P, R	ANG,DAL,IRC
RN^60@28R0%&	28.0	1/8	C, N, R	H, J, K, C, E	B, D, F	S	P, R	ANG,DAL,IRC
RN^60@28R4%&	28.4	1/8	C, N, R	H, J, K, C, E	B, D	S	P, R	ANG,DAL,IRC
RN^60@28R7%&	28.7	1/8	C, N, R	H, J, K, C, E	B, D, F	S	P, R	ANG,DAL,IRC
RN^60@29R1%&	29.1	1/8	C, N, R	H, J, K, C, E	B, D	S	P, R	ANG,DAL,IRC
RN^60@29R4%&	29.4	1/8	C, N, R	H, J, K, C, E	B, D, F	S	P, R	ANG,DAL,IRC
RN^60@29R8%&	29.8	1/8	C, N, R	H, J, K, C, E	B, D	S	P, R	ANG,DAL,IRC
RN^60@30R1%&	30.1	1/8	C, N, R	H, J, K, C, E	B, D, F	S	P, R	ANG,DAL,IRC
RN^60@30R5%&	30.5	1/8	C, N, R	H, J, K, C, E	B, D	S	P, R	ANG,DAL,IRC
RN^60@30R9%&	30.9	1/8	C, N, R	H, J, K, C, E	B, D, F	S	P, R	ANG,DAL,IRC
RN^60@31R2%&	31.2	1/8	C, N, R	H, J, K, C, E	B, D	S	P, R	ANG,DAL,IRC
RN^60@31R6%&	31.6	1/8	C, N, R	H, J, K, C, E	B, D, F	S	P, R	ANG,DAL,IRC
RN^60@32R0%&	32.0	1/8	C, N, R	H, J, K, C, E	B, D	S	P, R	ANG,DAL,IRC
RN^60@32R4%&	32.4	1/8	C, N, R	H, J, K, C, E	B, D, F	S	P, R	ANG,DAL,IRC
RN^60@32R8%&	32.8	1/8	C, N, R	H, J, K, C, E	B, D	S	P, R	ANG,DAL,IRC
RN^60@33R2%&	33.2	1/8	C, N, R	H, J, K, C, E	B, D, F	S	P, R	ANG,DAL,IRC
RN^60@33R6%&	33.6	1/8	C, N, R	H, J, K, C, E	B, D	S	P, R	ANG,DAL,IRC
RN^60@34R0%&	34.0	1/8	C, N, R	H, J, K, C, E	B, D, F	S	P, R	ANG,DAL,IRC
RN^60@34R4%&	34.4	1/8	C, N, R	H, J, K, C, E	B, D	S	P, R	ANG,DAL,IRC
RN^60@34R8%&	34.8	1/8	C, N, R	H, J, K, C, E	B, D, F	S	P, R	ANG,DAL,IRC
RN^60@35R2%&	35.2	1/8	C, N, R	H, J, K, C, E	B, D	S	P, R	ANG,DAL,IRC
RN^60@35R7%&	35.7	1/8	C, N, R	H, J, K, C, E	B, D, F	S	P, R	ANG,DAL,IRC
RN^60@36R1%&	36.1	1/8	C, N, R	H, J, K, C, E	B, D	S	P, R	ANG,DAL,IRC
RN^60@36R5%&	36.5	1/8	C, N, R	H, J, K, C, E	B, D, F	S	P, R	ANG,DAL,IRC
RN^60@37R0%&	37.0	1/8	C, N, R	H, J, K, C, E	B, D	S	P, R	ANG,DAL,IRC
RN^60@37R4%&	37.4	1/8	C, N, R	H, J, K, C, E	B, D, F	S	P, R	ANG,DAL,IRC
RN^60@37R9%&	37.9	1/8	C, N, R	H, J, K, C, E	B, D	S	P, R	ANG,DAL,IRC
RN^60@38R3%&	38.3	1/8	C, N, R	H, J, K, C, E	B, D, F	S	P, R	ANG,DAL,IRC
RN^60@38R8%&	38.8	1/8	C, N, R	H, J, K, C, E	B, D	S	P, R	ANG,DAL,IRC
RN^60@39R2%&	39.2	1/8	C, N, R	H, J, K, C, E	B, D, F	S	P, R	ANG,DAL,IRC
RN^60@39R7%&	39.7	1/8	C, N, R	H, J, K, C, E	B, D	S	P, R	ANG,DAL,IRC
RN^60@40R2%&	40.2	1/8	C, N, R	H, J, K, C, E	B, D, F	S	P, R	ANG,DAL,IRC
RN^60@40R7%&	40.7	1/8	C, N, R	H, J, K, C, E	B, D	S	P, R	ANG,DAL,IRC
RN^60@41R2%&	41.2	1/8	C, N, R	H, J, K, C, E	B, D, F	S	P, R	ANG,DAL,IRC

RN^60@41R7%&	41.7	1/8	C, N, R	H, J, K, C, E	B, D	S	P, R	ANG,DAL,IRC
RN^60@42R2%&	42.2	1/8	C, N, R	H, J, K, C, E	B, D, F	S	P, R	ANG,DAL,IRC
RN^60@42R7%&	42.7	1/8	C, N, R	H, J, K, C, E	B, D	S	P, R	ANG,DAL,IRC
RN^60@43R2%&	43.2	1/8	C, N, R	H, J, K, C, E	B, D, F	S	P, R	ANG,DAL,IRC
RN^60@43R7%&	43.7	1/8	C, N, R	H, J, K, C, E	B, D	S	P, R	ANG,DAL,IRC
RN^60@44R2%&	44.2	1/8	C, N, R	H, J, K, C, E	B, D, F	S	P, R	ANG,DAL,IRC
RN^60@44R8%&	44.8	1/8	C, N, R	H, J, K, C, E	B, D	S	P, R	ANG,DAL,IRC
RN^60@45R3%&	45.3	1/8	C, N, R	H, J, K, C, E	B, D, F	S	P, R	ANG,DAL,IRC
RN^60@45R9%&	45.9	1/8	C, N, R	H, J, K, C, E	B, D	S	P, R	ANG,DAL,IRC
RN^60@46R4%&	46.4	1/8	C, N, R	H, J, K, C, E	B, D, F	S	P, R	ANG,DAL,IRC
RN^60@47R0%&	47.0	1/8	C, N, R	H, J, K, C, E	B, D	S	P, R	ANG,DAL,IRC
RN^60@47R5%&	47.5	1/8	C, N, R	H, J, K, C, E	B, D, F	S	P, R	ANG,DAL,IRC
RN^60@48R1%&	48.1	1/8	C, N, R	H, J, K, C, E	B, D	S	P, R	ANG,DAL,IRC
RN^60@48R7%&	48.7	1/8	C, N, R	H, J, K, C, E	B, D, F	S	P, R	ANG,DAL,IRC
RN^60@49R3%&	49.3	1/8	C, N, R	H, J, K, C, E	B, D	S	P, R	ANG,DAL,IRC
RN^60@49R9%&	49.9	1/8	C, N, R	H, J, K, C, E	B, D, F	S	P, R	ANG,DAL,IRC
RN^60@50R5%&	50.5	1/8	C, N, R	H, J, K, C, E	B, D	S	P, R	ANG,DAL,IRC
RN^60@51R1%&	51.1	1/8	C, N, R	H, J, K, C, E	B, D, F	S	P, R	ANG,DAL,IRC
RN^60@51R7%&	51.7	1/8	C, N, R	H, J, K, C, E	B, D	S	P, R	ANG,DAL,IRC
RN^60@52R3%&	52.3	1/8	C, N, R	H, J, K, C, E	B, D, F	S	P, R	ANG,DAL,IRC
RN^60@53R0%&	53.0	1/8	C, N, R	H, J, K, C, E	B, D	S	P, R	ANG,DAL,IRC
RN^60@53R6%&	53.6	1/8	C, N, R	H, J, K, C, E	B, D, F	S	P, R	ANG,DAL,IRC
RN^60@54R2%&	54.2	1/8	C, N, R	H, J, K, C, E	B, D	S	P, R	ANG,DAL,IRC
RN^60@54R9%&	54.9	1/8	C, N, R	H, J, K, C, E	B, D, F	S	P, R	ANG,DAL,IRC
RN^60@55R6%&	55.6	1/8	C, N, R	H, J, K, C, E	B, D	S	P, R	ANG,DAL,IRC
RN^60@56R2%&	56.2	1/8	C, N, R	H, J, K, C, E	B, D, F	S	P, R	ANG,DAL,IRC
RN^60@56R9%&	56.9	1/8	C, N, R	H, J, K, C, E	B, D	S	P, R	ANG,DAL,IRC
RN^60@57R6%&	57.6	1/8	C, N, R	H, J, K, C, E	B, D, F	S	P, R	ANG,DAL,IRC
RN^60@58R3%&	58.3	1/8	C, N, R	H, J, K, C, E	B, D	S	P, R	ANG,DAL,IRC
RN^60@59R0%&	59.0	1/8	C, N, R	H, J, K, C, E	B, D, F	S	P, R	ANG,DAL,IRC
RN^60@59R7%&	59.7	1/8	C, N, R	H, J, K, C, E	B, D	S	P, R	ANG,DAL,IRC
RN^60@60R4%&	60.4	1/8	C, N, R	H, J, K, C, E	B, D, F	S	P, R	ANG,DAL,IRC
RN^60@61R2%&	61.2	1/8	C, N, R	H, J, K, C, E	B, D	S	P, R	ANG,DAL,IRC
RN^60@61R9%&	61.9	1/8	C, N, R	H, J, K, C, E	B, D, F	S	P, R	ANG,DAL,IRC
RN^60@62R6%&	62.6	1/8	C, N, R	H, J, K, C, E	B, D	S	P, R	ANG,DAL,IRC
RN^60@63R4%&	63.4	1/8	C, N, R	H, J, K, C, E	B, D, F	S	P, R	ANG,DAL,IRC
RN^60@64R2%&	64.2	1/8	C, N, R	H, J, K, C, E	B, D	S	P, R	ANG,DAL,IRC
RN^60@64R9%&	64.9	1/8	C, N, R	H, J, K, C, E	B, D, F	S	P, R	ANG,DAL,IRC
RN^60@65R7%&	65.7	1/8	C, N, R	H, J, K, C, E	B, D	S	P, R	ANG,DAL,IRC
RN^60@66R5%&	66.5	1/8	C, N, R	H, J, K, C, E	B, D, F	S	P, R	ANG,DAL,IRC
RN^60@67R3%&	67.3	1/8	C, N, R	H, J, K, C, E	B, D	S	P, R	ANG,DAL,IRC
RN^60@68R1%&	68.1	1/8	C, N, R	H, J, K, C, E	B, D, F	S	P, R	ANG,DAL,IRC
RN^60@69R0%&	69.0	1/8	C, N, R	H, J, K, C, E	B, D	S	P, R	ANG,DAL,IRC
RN^60@69R8%&	69.8	1/8	C, N, R	H, J, K, C, E	B, D, F	S	P, R	ANG,DAL,IRC
RN^60@70R6%&	70.6	1/8	C, N, R	H, J, K, C, E	B, D	S	P, R	ANG,DAL,IRC
RN^60@71R5%&	71.5	1/8	C, N, R	H, J, K, C, E	B, D, F	S	P, R	ANG,DAL,IRC
RN^60@72R3%&	72.3	1/8	C, N, R	H, J, K, C, E	B, D	S	P, R	ANG,DAL,IRC

RN^60@73R2%&	73.2	1/8	C, N, R	H, J, K, C, E	B, D, F	S	P, R	ANG,DAL,IRC
RN^60@74R1%&	74.1	1/8	C, N, R	H, J, K, C, E	B, D	S	P, R	ANG,DAL,IRC
RN^60@75R0%&	75.0	1/8	C, N, R	H, J, K, C, E	B, D, F	S	P, R	ANG,DAL,IRC
RN^60@75R9%&	75.9	1/8	C, N, R	H, J, K, C, E	B, D	S	P, R	ANG,DAL,IRC
RN^60@76R8%&	76.8	1/8	C, N, R	H, J, K, C, E	B, D, F	S	P, R	ANG,DAL,IRC
RN^60@77R7%&	77.7	1/8	C, N, R	H, J, K, C, E	B, D	S	P, R	ANG,DAL,IRC
RN^60@78R7%&	78.7	1/8	C, N, R	H, J, K, C, E	B, D, F	S	P, R	ANG,DAL,IRC
RN^60@79R6%&	79.6	1/8	C, N, R	H, J, K, C, E	B, D	S	P, R	ANG,DAL,IRC
RN^60@80R6%&	80.6	1/8	C, N, R	H, J, K, C, E	B, D, F	S	P, R	ANG,DAL,IRC
RN^60@81R6%&	81.6	1/8	C, N, R	H, J, K, C, E	B, D	S	P, R	ANG,DAL,IRC
RN^60@82R5%&	82.5	1/8	C, N, R	H, J, K, C, E	B, D, F	S	P, R	ANG,DAL,IRC
RN^60@83R5%&	83.5	1/8	C, N, R	H, J, K, C, E	B, D	S	P, R	ANG,DAL,IRC
RN^60@84R5%&	84.5	1/8	C, N, R	H, J, K, C, E	B, D, F	S	P, R	ANG,DAL,IRC
RN^60@85R6%&	85.6	1/8	C, N, R	H, J, K, C, E	B, D	S	P, R	ANG,DAL,IRC
RN^60@86R6%&	86.6	1/8	C, N, R	H, J, K, C, E	B, D, F	S	P, R	ANG,DAL,IRC
RN^60@87R6%&	87.6	1/8	C, N, R	H, J, K, C, E	B, D	S	P, R	ANG,DAL,IRC
RN^60@88R7%&	88.7	1/8	C, N, R	H, J, K, C, E	B, D, F	S	P, R	ANG,DAL,IRC
RN^60@89R8%&	89.8	1/8	C, N, R	H, J, K, C, E	B, D	S	P, R	ANG,DAL,IRC
RN^60@90R9%&	90.9	1/8	C, N, R	H, J, K, C, E	B, D, F	S	P, R	ANG,DAL,IRC
RN^60@92R0%&	92.0	1/8	C, N, R	H, J, K, C, E	B, D	S	P, R	ANG,DAL,IRC
RN^60@93R1%&	93.1	1/8	C, N, R	H, J, K, C, E	B, D, F	S	P, R	ANG,DAL,IRC
RN^60@94R2%&	94.2	1/8	C, N, R	H, J, K, C, E	B, D	S	P, R	ANG,DAL,IRC
RN^60@95R3%&	95.3	1/8	C, N, R	H, J, K, C, E	B, D, F	S	P, R	ANG,DAL,IRC
RN^60@96R5%&	96.5	1/8	C, N, R	H, J, K, C, E	B, D	S	P, R	ANG,DAL,IRC
RN^60@97R6%&	97.6	1/8	C, N, R	H, J, K, C, E	B, D, F	S	P, R	ANG,DAL,IRC
RN^60@98R8%&	98.8	1/8	C, N, R	H, J, K, C, E	B, D	S	P, R	ANG,DAL,IRC
RN^60@1000%&	100	1/8	C, N, R	H, J, K, C, E	B, D, F	S	P, R	ANG,DAL,IRC
RN^60@1010%&	101	1/8	C, N, R	H, J, K, C, E	B, D	S	P, R	ANG,DAL,IRC
RN^60@1020%&	102	1/8	C, N, R	H, J, K, C, E	B, D, F	S	P, R	ANG,DAL,IRC
RN^60@1040%&	104	1/8	C, N, R	H, J, K, C, E	B, D	S	P, R	ANG,DAL,IRC
RN^60@1050%&	105	1/8	C, N, R	H, J, K, C, E	B, D, F	S	P, R	ANG,DAL,IRC
RN^60@1060%&	106	1/8	C, N, R	H, J, K, C, E	B, D	S	P, R	ANG,DAL,IRC
RN^60@1070%&	107	1/8	C, N, R	H, J, K, C, E	B, D, F	S	P, R	ANG,DAL,IRC
RN^60@1090%&	109	1/8	C, N, R	H, J, K, C, E	B, D	S	P, R	ANG,DAL,IRC
RN^60@1100%&	110	1/8	C, N, R	H, J, K, C, E	B, D, F	S	P, R	ANG,DAL,IRC
RN^60@1110%&	111	1/8	C, N, R	H, J, K, C, E	B, D	S	P, R	ANG,DAL,IRC
RN^60@1130%&	113	1/8	C, N, R	H, J, K, C, E	B, D, F	S	P, R	ANG,DAL,IRC
RN^60@1140%&	114	1/8	C, N, R	H, J, K, C, E	B, D	S	P, R	ANG,DAL,IRC
RN^60@1150%&	115	1/8	C, N, R	H, J, K, C, E	B, D, F	S	P, R	ANG,DAL,IRC
RN^60@1170%&	117	1/8	C, N, R	H, J, K, C, E	B, D	S	P, R	ANG,DAL,IRC
RN^60@1180%&	118	1/8	C, N, R	H, J, K, C, E	B, D, F	S	P, R	ANG,DAL,IRC
RN^60@1200%&	120	1/8	C, N, R	H, J, K, C, E	B, D	S	P, R	ANG,DAL,IRC
RN^60@1210%&	121	1/8	C, N, R	H, J, K, C, E	B, D, F	S	P, R	ANG,DAL,IRC
RN^60@1230%&	123	1/8	C, N, R	H, J, K, C, E	B, D	S	P, R	ANG,DAL,IRC
RN^60@1240%&	124	1/8	C, N, R	H, J, K, C, E	B, D, F	S	P, R	ANG,DAL,IRC
RN^60@1260%&	126	1/8	C, N, R	H, J, K, C, E	B, D	S	P, R	ANG,DAL,IRC
RN^60@1270%&	127	1/8	C, N, R	H, J, K, C, E	B, D, F	S	P, R	ANG,DAL,IRC

RN^60@1290%&	129	1/8	C, N, R	H, J, K, C, E	B, D	S	P, R	ANG,DAL,IRC
RN^60@1300%&	130	1/8	C, N, R	H, J, K, C, E	B, D, F	S	P, R	ANG,DAL,IRC
RN^60@1320%&	132	1/8	C, N, R	H, J, K, C, E	B, D	S	P, R	ANG,DAL,IRC
RN^60@1330%&	133	1/8	C, N, R	H, J, K, C, E	B, D, F	S	P, R	ANG,DAL,IRC
RN^60@1350%&	135	1/8	C, N, R	H, J, K, C, E	B, D	S	P, R	ANG,DAL,IRC
RN^60@1370%&	137	1/8	C, N, R	H, J, K, C, E	B, D, F	S	P, R	ANG,DAL,IRC
RN^60@1380%&	138	1/8	C, N, R	H, J, K, C, E	B, D	S	P, R	ANG,DAL,IRC
RN^60@1400%&	140	1/8	C, N, R	H, J, K, C, E	B, D, F	S	P, R	ANG,DAL,IRC
RN^60@1420%&	142	1/8	C, N, R	H, J, K, C, E	B, D	S	P, R	ANG,DAL,IRC
RN^60@1430%&	143	1/8	C, N, R	H, J, K, C, E	B, D, F	S	P, R	ANG,DAL,IRC
RN^60@1450%&	145	1/8	C, N, R	H, J, K, C, E	B, D	S	P, R	ANG,DAL,IRC
RN^60@1470%&	147	1/8	C, N, R	H, J, K, C, E	B, D, F	S	P, R	ANG,DAL,IRC
RN^60@1490%&	149	1/8	C, N, R	H, J, K, C, E	B, D	S	P, R	ANG,DAL,IRC
RN^60@1500%&	150	1/8	C, N, R	H, J, K, C, E	B, D, F	S	P, R	ANG,DAL,IRC
RN^60@1520%&	152	1/8	C, N, R	H, J, K, C, E	B, D	S	P, R	ANG,DAL,IRC
RN^60@1540%&	154	1/8	C, N, R	H, J, K, C, E	B, D, F	S	P, R	ANG,DAL,IRC
RN^60@1560%&	156	1/8	C, N, R	H, J, K, C, E	B, D	S	P, R	ANG,DAL,IRC
RN^60@1580%&	158	1/8	C, N, R	H, J, K, C, E	B, D, F	S	P, R	ANG,DAL,IRC
RN^60@1600%&	160	1/8	C, N, R	H, J, K, C, E	B, D	S	P, R	ANG,DAL,IRC
RN^60@1620%&	162	1/8	C, N, R	H, J, K, C, E	B, D, F	S	P, R	ANG,DAL,IRC
RN^60@1640%&	164	1/8	C, N, R	H, J, K, C, E	B, D	S	P, R	ANG,DAL,IRC
RN^60@1650%&	165	1/8	C, N, R	H, J, K, C, E	B, D, F	S	P, R	ANG,DAL,IRC
RN^60@1670%&	167	1/8	C, N, R	H, J, K, C, E	B, D	S	P, R	ANG,DAL,IRC
RN^60@1690%&	169	1/8	C, N, R	H, J, K, C, E	B, D, F	S	P, R	ANG,DAL,IRC
RN^60@1720%&	172	1/8	C, N, R	H, J, K, C, E	B, D	S	P, R	ANG,DAL,IRC
RN^60@1740%&	174	1/8	C, N, R	H, J, K, C, E	B, D, F	S	P, R	ANG,DAL,IRC
RN^60@1760%&	176	1/8	C, N, R	H, J, K, C, E	B, D	S	P, R	ANG,DAL,IRC
RN^60@1780%&	178	1/8	C, N, R	H, J, K, C, E	B, D, F	S	P, R	ANG,DAL,IRC
RN^60@1800%&	180	1/8	C, N, R	H, J, K, C, E	B, D	S	P, R	ANG,DAL,IRC
RN^60@1820%&	182	1/8	C, N, R	H, J, K, C, E	B, D, F	S	P, R	ANG,DAL,IRC
RN^60@1840%&	184	1/8	C, N, R	H, J, K, C, E	B, D	S	P, R	ANG,DAL,IRC
RN^60@1870%&	187	1/8	C, N, R	H, J, K, C, E	B, D, F	S	P, R	ANG,DAL,IRC
RN^60@1890%&	189	1/8	C, N, R	H, J, K, C, E	B, D	S	P, R	ANG,DAL,IRC
RN^60@1910%&	191	1/8	C, N, R	H, J, K, C, E	B, D, F	S	P, R	ANG,DAL,IRC
RN^60@1930%&	193	1/8	C, N, R	H, J, K, C, E	B, D	S	P, R	ANG,DAL,IRC
RN^60@1960%&	196	1/8	C, N, R	H, J, K, C, E	B, D, F	S	P, R	ANG,DAL,IRC
RN^60@1980%&	198	1/8	C, N, R	H, J, K, C, E	B, D	S	P, R	ANG,DAL,IRC
RN^60@2000%&	200	1/8	C, N, R	H, J, K, C, E	B, D, F	S	P, R	ANG,DAL,IRC
RN^60@2030%&	203	1/8	C, N, R	H, J, K, C, E	B, D	S	P, R	ANG,DAL,IRC
RN^60@2050%&	205	1/8	C, N, R	H, J, K, C, E	B, D, F	S	P, R	ANG,DAL,IRC
RN^60@2080%&	208	1/8	C, N, R	H, J, K, C, E	B, D	S	P, R	ANG,DAL,IRC
RN^60@2100%&	210	1/8	C, N, R	H, J, K, C, E	B, D, F	S	P, R	ANG,DAL,IRC
RN^60@2130%&	213	1/8	C, N, R	H, J, K, C, E	B, D	S	P, R	ANG,DAL,IRC
RN^60@2150%&	215	1/8	C, N, R	H, J, K, C, E	B, D, F	S	P, R	ANG,DAL,IRC
RN^60@2180%&	218	1/8	C, N, R	H, J, K, C, E	B, D	S	P, R	ANG,DAL,IRC
RN^60@2210%&	221	1/8	C, N, R	H, J, K, C, E	B, D, F	S	P, R	ANG,DAL,IRC
RN^60@2230%&	223	1/8	C, N, R	H, J, K, C, E	B, D	S	P, R	ANG,DAL,IRC

RN^60@2260%&	226	1/8	C, N, R	H, J, K, C, E	B, D, F	S	P, R	ANG,DAL,IRC
RN^60@2290%&	229	1/8	C, N, R	H, J, K, C, E	B, D	S	P, R	ANG,DAL,IRC
RN^60@2320%&	232	1/8	C, N, R	H, J, K, C, E	B, D, F	S	P, R	ANG,DAL,IRC
RN^60@2340%&	234	1/8	C, N, R	H, J, K, C, E	B, D	S	P, R	ANG,DAL,IRC
RN^60@2370%&	237	1/8	C, N, R	H, J, K, C, E	B, D, F	S	P, R	ANG,DAL,IRC
RN^60@2400%&	240	1/8	C, N, R	H, J, K, C, E	B, D	S	P, R	ANG,DAL,IRC
RN^60@2430%&	243	1/8	C, N, R	H, J, K, C, E	B, D, F	S	P, R	ANG,DAL,IRC
RN^60@2460%&	246	1/8	C, N, R	H, J, K, C, E	B, D	S	P, R	ANG,DAL,IRC
RN^60@2490%&	249	1/8	C, N, R	H, J, K, C, E	B, D, F	S	P, R	ANG,DAL,IRC
RN^60@2520%&	252	1/8	C, N, R	H, J, K, C, E	B, D	S	P, R	ANG,DAL,IRC
RN^60@2550%&	255	1/8	C, N, R	H, J, K, C, E	B, D, F	S	P, R	ANG,DAL,IRC
RN^60@2580%&	258	1/8	C, N, R	H, J, K, C, E	B, D	S	P, R	ANG,DAL,IRC
RN^60@2610%&	261	1/8	C, N, R	H, J, K, C, E	B, D, F	S	P, R	ANG,DAL,IRC
RN^60@2640%&	264	1/8	C, N, R	H, J, K, C, E	B, D	S	P, R	ANG,DAL,IRC
RN^60@2670%&	267	1/8	C, N, R	H, J, K, C, E	B, D, F	S	P, R	ANG,DAL,IRC
RN^60@2710%&	271	1/8	C, N, R	H, J, K, C, E	B, D	S	P, R	ANG,DAL,IRC
RN^60@2740%&	274	1/8	C, N, R	H, J, K, C, E	B, D, F	S	P, R	ANG,DAL,IRC
RN^60@2770%&	277	1/8	C, N, R	H, J, K, C, E	B, D	S	P, R	ANG,DAL,IRC
RN^60@2800%&	280	1/8	C, N, R	H, J, K, C, E	B, D, F	S	P, R	ANG,DAL,IRC
RN^60@2840%&	284	1/8	C, N, R	H, J, K, C, E	B, D	S	P, R	ANG,DAL,IRC
RN^60@2870%&	287	1/8	C, N, R	H, J, K, C, E	B, D, F	S	P, R	ANG,DAL,IRC
RN^60@2910%&	291	1/8	C, N, R	H, J, K, C, E	B, D	S	P, R	ANG,DAL,IRC
RN^60@2940%&	294	1/8	C, N, R	H, J, K, C, E	B, D, F	S	P, R	ANG,DAL,IRC
RN^60@2980%&	298	1/8	C, N, R	H, J, K, C, E	B, D	S	P, R	ANG,DAL,IRC
RN^60@3010%&	301	1/8	C, N, R	H, J, K, C, E	B, D, F	S	P, R	ANG,DAL,IRC
RN^60@3050%&	305	1/8	C, N, R	H, J, K, C, E	B, D	S	P, R	ANG,DAL,IRC
RN^60@3090%&	309	1/8	C, N, R	H, J, K, C, E	B, D, F	S	P, R	ANG,DAL,IRC
RN^60@3120%&	312	1/8	C, N, R	H, J, K, C, E	B, D	S	P, R	ANG,DAL,IRC
RN^60@3160%&	316	1/8	C, N, R	H, J, K, C, E	B, D, F	S	P, R	ANG,DAL,IRC
RN^60@3200%&	320	1/8	C, N, R	H, J, K, C, E	B, D	S	P, R	ANG,DAL,IRC
RN^60@3240%&	324	1/8	C, N, R	H, J, K, C, E	B, D, F	S	P, R	ANG,DAL,IRC
RN^60@3280%&	328	1/8	C, N, R	H, J, K, C, E	B, D	S	P, R	ANG,DAL,IRC
RN^60@3320%&	332	1/8	C, N, R	H, J, K, C, E	B, D, F	S	P, R	ANG,DAL,IRC
RN^60@3360%&	336	1/8	C, N, R	H, J, K, C, E	B, D	S	P, R	ANG,DAL,IRC
RN^60@3400%&	340	1/8	C, N, R	H, J, K, C, E	B, D, F	S	P, R	ANG,DAL,IRC
RN^60@3440%&	344	1/8	C, N, R	H, J, K, C, E	B, D	S	P, R	ANG,DAL,IRC
RN^60@3480%&	348	1/8	C, N, R	H, J, K, C, E	B, D, F	S	P, R	ANG,DAL,IRC
RN^60@3520%&	352	1/8	C, N, R	H, J, K, C, E	B, D	S	P, R	ANG,DAL,IRC
RN^60@3570%&	357	1/8	C, N, R	H, J, K, C, E	B, D, F	S	P, R	ANG,DAL,IRC
RN^60@3610%&	361	1/8	C, N, R	H, J, K, C, E	B, D	S	P, R	ANG,DAL,IRC
RN^60@3650%&	365	1/8	C, N, R	H, J, K, C, E	B, D, F	S	P, R	ANG,DAL,IRC
RN^60@3700%&	370	1/8	C, N, R	H, J, K, C, E	B, D	S	P, R	ANG,DAL,IRC
RN^60@3740%&	374	1/8	C, N, R	H, J, K, C, E	B, D, F	S	P, R	ANG,DAL,IRC
RN^60@3790%&	379	1/8	C, N, R	H, J, K, C, E	B, D	S	P, R	ANG,DAL,IRC
RN^60@3830%&	383	1/8	C, N, R	H, J, K, C, E	B, D, F	S	P, R	ANG,DAL,IRC
RN^60@3880%&	388	1/8	C, N, R	H, J, K, C, E	B, D	S	P, R	ANG,DAL,IRC
RN^60@3920%&	392	1/8	C, N, R	H, J, K, C, E	B, D, F	S	P, R	ANG,DAL,IRC

RN^60@3970%&	397	1/8	C, N, R	H, J, K, C, E	B, D	S	P, R	ANG,DAL,IRC
RN^60@4020%&	402	1/8	C, N, R	H, J, K, C, E	B, D, F	S	P, R	ANG,DAL,IRC
RN^60@4070%&	407	1/8	C, N, R	H, J, K, C, E	B, D	S	P, R	ANG,DAL,IRC
RN^60@4120%&	412	1/8	C, N, R	H, J, K, C, E	B, D, F	S	P, R	ANG,DAL,IRC
RN^60@4170%&	417	1/8	C, N, R	H, J, K, C, E	B, D	S	P, R	ANG,DAL,IRC
RN^60@4220%&	422	1/8	C, N, R	H, J, K, C, E	B, D, F	S	P, R	ANG,DAL,IRC
RN^60@4270%&	427	1/8	C, N, R	H, J, K, C, E	B, D	S	P, R	ANG,DAL,IRC
RN^60@4320%&	432	1/8	C, N, R	H, J, K, C, E	B, D, F	S	P, R	ANG,DAL,IRC
RN^60@4370%&	437	1/8	C, N, R	H, J, K, C, E	B, D	S	P, R	ANG,DAL,IRC
RN^60@4420%&	442	1/8	C, N, R	H, J, K, C, E	B, D, F	S	P, R	ANG,DAL,IRC
RN^60@4480%&	448	1/8	C, N, R	H, J, K, C, E	B, D	S	P, R	ANG,DAL,IRC
RN^60@4530%&	453	1/8	C, N, R	H, J, K, C, E	B, D, F	S	P, R	ANG,DAL,IRC
RN^60@4590%&	459	1/8	C, N, R	H, J, K, C, E	B, D	S	P, R	ANG,DAL,IRC
RN^60@4640%&	464	1/8	C, N, R	H, J, K, C, E	B, D, F	S	P, R	ANG,DAL,IRC
RN^60@4700%&	470	1/8	C, N, R	H, J, K, C, E	B, D	S	P, R	ANG,DAL,IRC
RN^60@4750%&	475	1/8	C, N, R	H, J, K, C, E	B, D, F	S	P, R	ANG,DAL,IRC
RN^60@4810%&	481	1/8	C, N, R	H, J, K, C, E	B, D	S	P, R	ANG,DAL,IRC
RN^60@4870%&	487	1/8	C, N, R	H, J, K, C, E	B, D, F	S	P, R	ANG,DAL,IRC
RN^60@4930%&	493	1/8	C, N, R	H, J, K, C, E	B, D	S	P, R	ANG,DAL,IRC
RN^60@4990%&	499	1/8	C, N, R	H, J, K, C, E	B, D, F	S	P, R	ANG,DAL,IRC
RN^60@5050%&	505	1/8	C, N, R	H, J, K, C, E	B, D	S	P, R	ANG,DAL,IRC
RN^60@5110%&	511	1/8	C, N, R	H, J, K, C, E	B, D, F	S	P, R	ANG,DAL,IRC
RN^60@5170%&	517	1/8	C, N, R	H, J, K, C, E	B, D	S	P, R	ANG,DAL,IRC
RN^60@5230%&	523	1/8	C, N, R	H, J, K, C, E	B, D, F	S	P, R	ANG,DAL,IRC
RN^60@5300%&	530	1/8	C, N, R	H, J, K, C, E	B, D	S	P, R	ANG,DAL,IRC
RN^60@5360%&	536	1/8	C, N, R	H, J, K, C, E	B, D, F	S	P, R	ANG,DAL,IRC
RN^60@5420%&	542	1/8	C, N, R	H, J, K, C, E	B, D	S	P, R	ANG,DAL,IRC
RN^60@5490%&	549	1/8	C, N, R	H, J, K, C, E	B, D, F	S	P, R	ANG,DAL,IRC
RN^60@5560%&	556	1/8	C, N, R	H, J, K, C, E	B, D	S	P, R	ANG,DAL,IRC
RN^60@5620%&	562	1/8	C, N, R	H, J, K, C, E	B, D, F	S	P, R	ANG,DAL,IRC
RN^60@5690%&	569	1/8	C, N, R	H, J, K, C, E	B, D	S	P, R	ANG,DAL,IRC
RN^60@5760%&	576	1/8	C, N, R	H, J, K, C, E	B, D, F	S	P, R	ANG,DAL,IRC
RN^60@5830%&	583	1/8	C, N, R	H, J, K, C, E	B, D	S	P, R	ANG,DAL,IRC
RN^60@5900%&	590	1/8	C, N, R	H, J, K, C, E	B, D, F	S	P, R	ANG,DAL,IRC
RN^60@5970%&	597	1/8	C, N, R	H, J, K, C, E	B, D	S	P, R	ANG,DAL,IRC
RN^60@6040%&	604	1/8	C, N, R	H, J, K, C, E	B, D, F	S	P, R	ANG,DAL,IRC
RN^60@6120%&	612	1/8	C, N, R	H, J, K, C, E	B, D	S	P, R	ANG,DAL,IRC
RN^60@6190%&	619	1/8	C, N, R	H, J, K, C, E	B, D, F	S	P, R	ANG,DAL,IRC
RN^60@6260%&	626	1/8	C, N, R	H, J, K, C, E	B, D	S	P, R	ANG,DAL,IRC
RN^60@6340%&	634	1/8	C, N, R	H, J, K, C, E	B, D, F	S	P, R	ANG,DAL,IRC
RN^60@6420%&	642	1/8	C, N, R	H, J, K, C, E	B, D	S	P, R	ANG,DAL,IRC
RN^60@6490%&	649	1/8	C, N, R	H, J, K, C, E	B, D, F	S	P, R	ANG,DAL,IRC
RN^60@6570%&	657	1/8	C, N, R	H, J, K, C, E	B, D	S	P, R	ANG,DAL,IRC
RN^60@6650%&	665	1/8	C, N, R	H, J, K, C, E	B, D, F	S	P, R	ANG,DAL,IRC
RN^60@6730%&	673	1/8	C, N, R	H, J, K, C, E	B, D	S	P, R	ANG,DAL,IRC
RN^60@6810%&	681	1/8	C, N, R	H, J, K, C, E	B, D, F	S	P, R	ANG,DAL,IRC
RN^60@6900%&	690	1/8	C, N, R	H, J, K, C, E	B, D	S	P, R	ANG,DAL,IRC

RN^60@6980%&	698	1/8	C, N, R	H, J, K, C, E	B, D, F	S	P, R	ANG,DAL,IRC
RN^60@7060%&	706	1/8	C, N, R	H, J, K, C, E	B, D	S	P, R	ANG,DAL,IRC
RN^60@7150%&	715	1/8	C, N, R	H, J, K, C, E	B, D, F	S	P, R	ANG,DAL,IRC
RN^60@7230%&	723	1/8	C, N, R	H, J, K, C, E	B, D	S	P, R	ANG,DAL,IRC
RN^60@7320%&	732	1/8	C, N, R	H, J, K, C, E	B, D, F	S	P, R	ANG,DAL,IRC
RN^60@7410%&	741	1/8	C, N, R	H, J, K, C, E	B, D	S	P, R	ANG,DAL,IRC
RN^60@7500%&	750	1/8	C, N, R	H, J, K, C, E	B, D, F	S	P, R	ANG,DAL,IRC
RN^60@7590%&	759	1/8	C, N, R	H, J, K, C, E	B, D	S	P, R	ANG,DAL,IRC
RN^60@7680%&	768	1/8	C, N, R	H, J, K, C, E	B, D, F	S	P, R	ANG,DAL,IRC
RN^60@7770%&	777	1/8	C, N, R	H, J, K, C, E	B, D	S	P, R	ANG,DAL,IRC
RN^60@7870%&	787	1/8	C, N, R	H, J, K, C, E	B, D, F	S	P, R	ANG,DAL,IRC
RN^60@7960%&	796	1/8	C, N, R	H, J, K, C, E	B, D	S	P, R	ANG,DAL,IRC
RN^60@8060%&	806	1/8	C, N, R	H, J, K, C, E	B, D, F	S	P, R	ANG,DAL,IRC
RN^60@8160%&	816	1/8	C, N, R	H, J, K, C, E	B, D	S	P, R	ANG,DAL,IRC
RN^60@8250%&	825	1/8	C, N, R	H, J, K, C, E	B, D, F	S	P, R	ANG,DAL,IRC
RN^60@8350%&	835	1/8	C, N, R	H, J, K, C, E	B, D	S	P, R	ANG,DAL,IRC
RN^60@8450%&	845	1/8	C, N, R	H, J, K, C, E	B, D, F	S	P, R	ANG,DAL,IRC
RN^60@8560%&	856	1/8	C, N, R	H, J, K, C, E	B, D	S	P, R	ANG,DAL,IRC
RN^60@8660%&	866	1/8	C, N, R	H, J, K, C, E	B, D, F	S	P, R	ANG,DAL,IRC
RN^60@8760%&	876	1/8	C, N, R	H, J, K, C, E	B, D	S	P, R	ANG,DAL,IRC
RN^60@8870%&	887	1/8	C, N, R	H, J, K, C, E	B, D, F	S	P, R	ANG,DAL,IRC
RN^60@8980%&	898	1/8	C, N, R	H, J, K, C, E	B, D	S	P, R	ANG,DAL,IRC
RN^60@9090%&	909	1/8	C, N, R	H, J, K, C, E	B, D, F	S	P, R	ANG,DAL,IRC
RN^60@9200%&	920	1/8	C, N, R	H, J, K, C, E	B, D	S	P, R	ANG,DAL,IRC
RN^60@9310%&	931	1/8	C, N, R	H, J, K, C, E	B, D, F	S	P, R	ANG,DAL,IRC
RN^60@9420%&	942	1/8	C, N, R	H, J, K, C, E	B, D	S	P, R	ANG,DAL,IRC
RN^60@9530%&	953	1/8	C, N, R	H, J, K, C, E	B, D, F	S	P, R	ANG,DAL,IRC
RN^60@9650%&	965	1/8	C, N, R	H, J, K, C, E	B, D	S	P, R	ANG,DAL,IRC
RN^60@9760%&	976	1/8	C, N, R	H, J, K, C, E	B, D, F	S	P, R	ANG,DAL,IRC
RN^60@9880%&	988	1/8	C, N, R	H, J, K, C, E	B, D	S	P, R	ANG,DAL,IRC
RN^60@1001%&	1,000	1/8	C, N, R	H, J, K, C, E	B, D, F	S	P, R	ANG,DAL,IRC
RN^60@1011%&	1,010	1/8	C, N, R	H, J, K, C, E	B, D	S	P, R	ANG,DAL,IRC
RN^60@1021%&	1,020	1/8	C, N, R	H, J, K, C, E	B, D, F	S	P, R	ANG,DAL,IRC
RN^60@1041%&	1,040	1/8	C, N, R	H, J, K, C, E	B, D	S	P, R	ANG,DAL,IRC
RN^60@1051%&	1,050	1/8	C, N, R	H, J, K, C, E	B, D, F	S	P, R	ANG,DAL,IRC
RN^60@1061%&	1,060	1/8	C, N, R	H, J, K, C, E	B, D	S	P, R	ANG,DAL,IRC
RN^60@1071%&	1,070	1/8	C, N, R	H, J, K, C, E	B, D, F	S	P, R	ANG,DAL,IRC
RN^60@1091%&	1,090	1/8	C, N, R	H, J, K, C, E	B, D	S	P, R	ANG,DAL,IRC
RN^60@1101%&	1,100	1/8	C, N, R	H, J, K, C, E	B, D, F	S	P, R	ANG,DAL,IRC
RN^60@1111%&	1,110	1/8	C, N, R	H, J, K, C, E	B, D	S	P, R	ANG,DAL,IRC
RN^60@1131%&	1,130	1/8	C, N, R	H, J, K, C, E	B, D, F	S	P, R	ANG,DAL,IRC
RN^60@1141%&	1,140	1/8	C, N, R	H, J, K, C, E	B, D	S	P, R	ANG,DAL,IRC
RN^60@1151%&	1,150	1/8	C, N, R	H, J, K, C, E	B, D, F	S	P, R	ANG,DAL,IRC
RN^60@1171%&	1,170	1/8	C, N, R	H, J, K, C, E	B, D	S	P, R	ANG,DAL,IRC
RN^60@1181%&	1,180	1/8	C, N, R	H, J, K, C, E	B, D, F	S	P, R	ANG,DAL,IRC
RN^60@1201%&	1,200	1/8	C, N, R	H, J, K, C, E	B, D	S	P, R	ANG,DAL,IRC
RN^60@1211%&	1,210	1/8	C, N, R	H, J, K, C, E	B, D, F	S	P, R	ANG,DAL,IRC

RN^60@1231%&	1,230	1/8	C, N, R	H, J, K, C, E	B, D	S	P, R	ANG,DAL,IRC
RN^60@1241%&	1,240	1/8	C, N, R	H, J, K, C, E	B, D, F	S	P, R	ANG,DAL,IRC
RN^60@1261%&	1,260	1/8	C, N, R	H, J, K, C, E	B, D	S	P, R	ANG,DAL,IRC
RN^60@1271%&	1,270	1/8	C, N, R	H, J, K, C, E	B, D, F	S	P, R	ANG,DAL,IRC
RN^60@1291%&	1,290	1/8	C, N, R	H, J, K, C, E	B, D	S	P, R	ANG,DAL,IRC
RN^60@1301%&	1,300	1/8	C, N, R	H, J, K, C, E	B, D, F	S	P, R	ANG,DAL,IRC
RN^60@1321%&	1,320	1/8	C, N, R	H, J, K, C, E	B, D	S	P, R	ANG,DAL,IRC
RN^60@1331%&	1,330	1/8	C, N, R	H, J, K, C, E	B, D, F	S	P, R	ANG,DAL,IRC
RN^60@1351%&	1,350	1/8	C, N, R	H, J, K, C, E	B, D	S	P, R	ANG,DAL,IRC
RN^60@1371%&	1,370	1/8	C, N, R	H, J, K, C, E	B, D, F	S	P, R	ANG,DAL,IRC
RN^60@1381%&	1,380	1/8	C, N, R	H, J, K, C, E	B, D	S	P, R	ANG,DAL,IRC
RN^60@1401%&	1,400	1/8	C, N, R	H, J, K, C, E	B, D, F	S	P, R	ANG,DAL,IRC
RN^60@1421%&	1,420	1/8	C, N, R	H, J, K, C, E	B, D	S	P, R	ANG,DAL,IRC
RN^60@1431%&	1,430	1/8	C, N, R	H, J, K, C, E	B, D, F	S	P, R	ANG,DAL,IRC
RN^60@1451%&	1,450	1/8	C, N, R	H, J, K, C, E	B, D	S	P, R	ANG,DAL,IRC
RN^60@1471%&	1,470	1/8	C, N, R	H, J, K, C, E	B, D, F	S	P, R	ANG,DAL,IRC
RN^60@1491%&	1,490	1/8	C, N, R	H, J, K, C, E	B, D	S	P, R	ANG,DAL,IRC
RN^60@1501%&	1,500	1/8	C, N, R	H, J, K, C, E	B, D, F	S	P, R	ANG,DAL,IRC
RN^60@1521%&	1,520	1/8	C, N, R	H, J, K, C, E	B, D	S	P, R	ANG,DAL,IRC
RN^60@1541%&	1,540	1/8	C, N, R	H, J, K, C, E	B, D, F	S	P, R	ANG,DAL,IRC
RN^60@1561%&	1,560	1/8	C, N, R	H, J, K, C, E	B, D	S	P, R	ANG,DAL,IRC
RN^60@1581%&	1,580	1/8	C, N, R	H, J, K, C, E	B, D, F	S	P, R	ANG,DAL,IRC
RN^60@1601%&	1,600	1/8	C, N, R	H, J, K, C, E	B, D	S	P, R	ANG,DAL,IRC
RN^60@1621%&	1,620	1/8	C, N, R	H, J, K, C, E	B, D, F	S	P, R	ANG,DAL,IRC
RN^60@1641%&	1,640	1/8	C, N, R	H, J, K, C, E	B, D	S	P, R	ANG,DAL,IRC
RN^60@1651%&	1,650	1/8	C, N, R	H, J, K, C, E	B, D, F	S	P, R	ANG,DAL,IRC
RN^60@1671%&	1,670	1/8	C, N, R	H, J, K, C, E	B, D	S	P, R	ANG,DAL,IRC
RN^60@1691%&	1,690	1/8	C, N, R	H, J, K, C, E	B, D, F	S	P, R	ANG,DAL,IRC
RN^60@1721%&	1,720	1/8	C, N, R	H, J, K, C, E	B, D	S	P, R	ANG,DAL,IRC
RN^60@1741%&	1,740	1/8	C, N, R	H, J, K, C, E	B, D, F	S	P, R	ANG,DAL,IRC
RN^60@1761%&	1,760	1/8	C, N, R	H, J, K, C, E	B, D	S	P, R	ANG,DAL,IRC
RN^60@1781%&	1,780	1/8	C, N, R	H, J, K, C, E	B, D, F	S	P, R	ANG,DAL,IRC
RN^60@1801%&	1,800	1/8	C, N, R	H, J, K, C, E	B, D	S	P, R	ANG,DAL,IRC
RN^60@1821%&	1,820	1/8	C, N, R	H, J, K, C, E	B, D, F	S	P, R	ANG,DAL,IRC
RN^60@1841%&	1,840	1/8	C, N, R	H, J, K, C, E	B, D	S	P, R	ANG,DAL,IRC
RN^60@1871%&	1,870	1/8	C, N, R	H, J, K, C, E	B, D, F	S	P, R	ANG,DAL,IRC
RN^60@1891%&	1,890	1/8	C, N, R	H, J, K, C, E	B, D	S	P, R	ANG,DAL,IRC
RN^60@1911%&	1,910	1/8	C, N, R	H, J, K, C, E	B, D, F	S	P, R	ANG,DAL,IRC
RN^60@1931%&	1,930	1/8	C, N, R	H, J, K, C, E	B, D	S	P, R	ANG,DAL,IRC
RN^60@1961%&	1,960	1/8	C, N, R	H, J, K, C, E	B, D, F	S	P, R	ANG,DAL,IRC
RN^60@1981%&	1,980	1/8	C, N, R	H, J, K, C, E	B, D	S	P, R	ANG,DAL,IRC
RN^60@2001%&	2,000	1/8	C, N, R	H, J, K, C, E	B, D, F	S	P, R	ANG,DAL,IRC
RN^60@2031%&	2,030	1/8	C, N, R	H, J, K, C, E	B, D	S	P, R	ANG,DAL,IRC
RN^60@2051%&	2,050	1/8	C, N, R	H, J, K, C, E	B, D, F	S	P, R	ANG,DAL,IRC
RN^60@2081%&	2,080	1/8	C, N, R	H, J, K, C, E	B, D	S	P, R	ANG,DAL,IRC
RN^60@2101%&	2,100	1/8	C, N, R	H, J, K, C, E	B, D, F	S	P, R	ANG,DAL,IRC
RN^60@2131%&	2,130	1/8	C, N, R	H, J, K, C, E	B, D	S	P, R	ANG,DAL,IRC

RN^60@2151%&	2,150	1/8	C, N, R	H, J, K, C, E	B, D, F	S	P, R	ANG,DAL,IRC
RN^60@2181%&	2,180	1/8	C, N, R	H, J, K, C, E	B, D	S	P, R	ANG,DAL,IRC
RN^60@2211%&	2,210	1/8	C, N, R	H, J, K, C, E	B, D, F	S	P, R	ANG,DAL,IRC
RN^60@2231%&	2,230	1/8	C, N, R	H, J, K, C, E	B, D	S	P, R	ANG,DAL,IRC
RN^60@2261%&	2,260	1/8	C, N, R	H, J, K, C, E	B, D, F	S	P, R	ANG,DAL,IRC
RN^60@2291%&	2,290	1/8	C, N, R	H, J, K, C, E	B, D	S	P, R	ANG,DAL,IRC
RN^60@2321%&	2,320	1/8	C, N, R	H, J, K, C, E	B, D, F	S	P, R	ANG,DAL,IRC
RN^60@2341%&	2,340	1/8	C, N, R	H, J, K, C, E	B, D	S	P, R	ANG,DAL,IRC
RN^60@2371%&	2,370	1/8	C, N, R	H, J, K, C, E	B, D, F	S	P, R	ANG,DAL,IRC
RN^60@2401%&	2,400	1/8	C, N, R	H, J, K, C, E	B, D	S	P, R	ANG,DAL,IRC
RN^60@2431%&	2,430	1/8	C, N, R	H, J, K, C, E	B, D, F	S	P, R	ANG,DAL,IRC
RN^60@2461%&	2,460	1/8	C, N, R	H, J, K, C, E	B, D	S	P, R	ANG,DAL,IRC
RN^60@2491%&	2,490	1/8	C, N, R	H, J, K, C, E	B, D, F	S	P, R	ANG,DAL,IRC
RN^60@2521%&	2,520	1/8	C, N, R	H, J, K, C, E	B, D	S	P, R	ANG,DAL,IRC
RN^60@2551%&	2,550	1/8	C, N, R	H, J, K, C, E	B, D, F	S	P, R	ANG,DAL,IRC
RN^60@2581%&	2,580	1/8	C, N, R	H, J, K, C, E	B, D	S	P, R	ANG,DAL,IRC
RN^60@2611%&	2,610	1/8	C, N, R	H, J, K, C, E	B, D, F	S	P, R	ANG,DAL,IRC
RN^60@2641%&	2,640	1/8	C, N, R	H, J, K, C, E	B, D	S	P, R	ANG,DAL,IRC
RN^60@2671%&	2,670	1/8	C, N, R	H, J, K, C, E	B, D, F	S	P, R	ANG,DAL,IRC
RN^60@2711%&	2,710	1/8	C, N, R	H, J, K, C, E	B, D	S	P, R	ANG,DAL,IRC
RN^60@2741%&	2,740	1/8	C, N, R	H, J, K, C, E	B, D, F	S	P, R	ANG,DAL,IRC
RN^60@2771%&	2,770	1/8	C, N, R	H, J, K, C, E	B, D	S	P, R	ANG,DAL,IRC
RN^60@2801%&	2,800	1/8	C, N, R	H, J, K, C, E	B, D, F	S	P, R	ANG,DAL,IRC
RN^60@2841%&	2,840	1/8	C, N, R	H, J, K, C, E	B, D	S	P, R	ANG,DAL,IRC
RN^60@2871%&	2,870	1/8	C, N, R	H, J, K, C, E	B, D, F	S	P, R	ANG,DAL,IRC
RN^60@2911%&	2,910	1/8	C, N, R	H, J, K, C, E	B, D	S	P, R	ANG,DAL,IRC
RN^60@2941%&	2,940	1/8	C, N, R	H, J, K, C, E	B, D, F	S	P, R	ANG,DAL,IRC
RN^60@2981%&	2,980	1/8	C, N, R	H, J, K, C, E	B, D	S	P, R	ANG,DAL,IRC
RN^60@3011%&	3,010	1/8	C, N, R	H, J, K, C, E	B, D, F	S	P, R	ANG,DAL,IRC
RN^60@3051%&	3,050	1/8	C, N, R	H, J, K, C, E	B, D	S	P, R	ANG,DAL,IRC
RN^60@3091%&	3,090	1/8	C, N, R	H, J, K, C, E	B, D, F	S	P, R	ANG,DAL,IRC
RN^60@3121%&	3,120	1/8	C, N, R	H, J, K, C, E	B, D	S	P, R	ANG,DAL,IRC
RN^60@3161%&	3,160	1/8	C, N, R	H, J, K, C, E	B, D, F	S	P, R	ANG,DAL,IRC
RN^60@3201%&	3,200	1/8	C, N, R	H, J, K, C, E	B, D	S	P, R	ANG,DAL,IRC
RN^60@3241%&	3,240	1/8	C, N, R	H, J, K, C, E	B, D, F	S	P, R	ANG,DAL,IRC
RN^60@3281%&	3,280	1/8	C, N, R	H, J, K, C, E	B, D	S	P, R	ANG,DAL,IRC
RN^60@3321%&	3,320	1/8	C, N, R	H, J, K, C, E	B, D, F	S	P, R	ANG,DAL,IRC
RN^60@3361%&	3,360	1/8	C, N, R	H, J, K, C, E	B, D	S	P, R	ANG,DAL,IRC
RN^60@3401%&	3,400	1/8	C, N, R	H, J, K, C, E	B, D, F	S	P, R	ANG,DAL,IRC
RN^60@3441%&	3,440	1/8	C, N, R	H, J, K, C, E	B, D	S	P, R	ANG,DAL,IRC
RN^60@3481%&	3,480	1/8	C, N, R	H, J, K, C, E	B, D, F	S	P, R	ANG,DAL,IRC
RN^60@3521%&	3,520	1/8	C, N, R	H, J, K, C, E	B, D	S	P, R	ANG,DAL,IRC
RN^60@3571%&	3,570	1/8	C, N, R	H, J, K, C, E	B, D, F	S	P, R	ANG,DAL,IRC
RN^60@3611%&	3,610	1/8	C, N, R	H, J, K, C, E	B, D	S	P, R	ANG,DAL,IRC
RN^60@3651%&	3,650	1/8	C, N, R	H, J, K, C, E	B, D, F	S	P, R	ANG,DAL,IRC
RN^60@3701%&	3,700	1/8	C, N, R	H, J, K, C, E	B, D	S	P, R	ANG,DAL,IRC
RN^60@3741%&	3,740	1/8	C, N, R	H, J, K, C, E	B, D, F	S	P, R	ANG,DAL,IRC

RN^60@3791%&	3,790	1/8	C, N, R	H, J, K, C, E	B, D	S	P, R	ANG,DAL,IRC
RN^60@3831%&	3,830	1/8	C, N, R	H, J, K, C, E	B, D, F	S	P, R	ANG,DAL,IRC
RN^60@3881%&	3,880	1/8	C, N, R	H, J, K, C, E	B, D	S	P, R	ANG,DAL,IRC
RN^60@3921%&	3,920	1/8	C, N, R	H, J, K, C, E	B, D, F	S	P, R	ANG,DAL,IRC
RN^60@3971%&	3,970	1/8	C, N, R	H, J, K, C, E	B, D	S	P, R	ANG,DAL,IRC
RN^60@4021%&	4,020	1/8	C, N, R	H, J, K, C, E	B, D, F	S	P, R	ANG,DAL,IRC
RN^60@4071%&	4,070	1/8	C, N, R	H, J, K, C, E	B, D	S	P, R	ANG,DAL,IRC
RN^60@4121%&	4,120	1/8	C, N, R	H, J, K, C, E	B, D, F	S	P, R	ANG,DAL,IRC
RN^60@4171%&	4,170	1/8	C, N, R	H, J, K, C, E	B, D	S	P, R	ANG,DAL,IRC
RN^60@4221%&	4,220	1/8	C, N, R	H, J, K, C, E	B, D, F	S	P, R	ANG,DAL,IRC
RN^60@4271%&	4,270	1/8	C, N, R	H, J, K, C, E	B, D	S	P, R	ANG,DAL,IRC
RN^60@4321%&	4,320	1/8	C, N, R	H, J, K, C, E	B, D, F	S	P, R	ANG,DAL,IRC
RN^60@4371%&	4,370	1/8	C, N, R	H, J, K, C, E	B, D	S	P, R	ANG,DAL,IRC
RN^60@4421%&	4,420	1/8	C, N, R	H, J, K, C, E	B, D, F	S	P, R	ANG,DAL,IRC
RN^60@4481%&	4,480	1/8	C, N, R	H, J, K, C, E	B, D	S	P, R	ANG,DAL,IRC
RN^60@4531%&	4,530	1/8	C, N, R	H, J, K, C, E	B, D, F	S	P, R	ANG,DAL,IRC
RN^60@4591%&	4,590	1/8	C, N, R	H, J, K, C, E	B, D	S	P, R	ANG,DAL,IRC
RN^60@4641%&	4,640	1/8	C, N, R	H, J, K, C, E	B, D, F	S	P, R	ANG,DAL,IRC
RN^60@4701%&	4,700	1/8	C, N, R	H, J, K, C, E	B, D	S	P, R	ANG,DAL,IRC
RN^60@4751%&	4,750	1/8	C, N, R	H, J, K, C, E	B, D, F	S	P, R	ANG,DAL,IRC
RN^60@4811%&	4,810	1/8	C, N, R	H, J, K, C, E	B, D	S	P, R	ANG,DAL,IRC
RN^60@4871%&	4,870	1/8	C, N, R	H, J, K, C, E	B, D, F	S	P, R	ANG,DAL,IRC
RN^60@4931%&	4,930	1/8	C, N, R	H, J, K, C, E	B, D	S	P, R	ANG,DAL,IRC
RN^60@4991%&	4,990	1/8	C, N, R	H, J, K, C, E	B, D, F	S	P, R	ANG,DAL,IRC
RN^60@5051%&	5,050	1/8	C, N, R	H, J, K, C, E	B, D	S	P, R	ANG,DAL,IRC
RN^60@5111%&	5,110	1/8	C, N, R	H, J, K, C, E	B, D, F	S	P, R	ANG,DAL,IRC
RN^60@5171%&	5,170	1/8	C, N, R	H, J, K, C, E	B, D	S	P, R	ANG,DAL,IRC
RN^60@5231%&	5,230	1/8	C, N, R	H, J, K, C, E	B, D, F	S	P, R	ANG,DAL,IRC
RN^60@5301%&	5,300	1/8	C, N, R	H, J, K, C, E	B, D	S	P, R	ANG,DAL,IRC
RN^60@5361%&	5,360	1/8	C, N, R	H, J, K, C, E	B, D, F	S	P, R	ANG,DAL,IRC
RN^60@5421%&	5,420	1/8	C, N, R	H, J, K, C, E	B, D	S	P, R	ANG,DAL,IRC
RN^60@5491%&	5,490	1/8	C, N, R	H, J, K, C, E	B, D, F	S	P, R	ANG,DAL,IRC
RN^60@5561%&	5,560	1/8	C, N, R	H, J, K, C, E	B, D	S	P, R	ANG,DAL,IRC
RN^60@5621%&	5,620	1/8	C, N, R	H, J, K, C, E	B, D, F	S	P, R	ANG,DAL,IRC
RN^60@5691%&	5,690	1/8	C, N, R	H, J, K, C, E	B, D	S	P, R	ANG,DAL,IRC
RN^60@5761%&	5,760	1/8	C, N, R	H, J, K, C, E	B, D, F	S	P, R	ANG,DAL,IRC
RN^60@5831%&	5,830	1/8	C, N, R	H, J, K, C, E	B, D	S	P, R	ANG,DAL,IRC
RN^60@5901%&	5,900	1/8	C, N, R	H, J, K, C, E	B, D, F	S	P, R	ANG,DAL,IRC
RN^60@5971%&	5,970	1/8	C, N, R	H, J, K, C, E	B, D	S	P, R	ANG,DAL,IRC
RN^60@6041%&	6,040	1/8	C, N, R	H, J, K, C, E	B, D, F	S	P, R	ANG,DAL,IRC
RN^60@6121%&	6,120	1/8	C, N, R	H, J, K, C, E	B, D	S	P, R	ANG,DAL,IRC
RN^60@6191%&	6,190	1/8	C, N, R	H, J, K, C, E	B, D, F	S	P, R	ANG,DAL,IRC
RN^60@6261%&	6,260	1/8	C, N, R	H, J, K, C, E	B, D	S	P, R	ANG,DAL,IRC
RN^60@6341%&	6,340	1/8	C, N, R	H, J, K, C, E	B, D, F	S	P, R	ANG,DAL,IRC
RN^60@6421%&	6,420	1/8	C, N, R	H, J, K, C, E	B, D	S	P, R	ANG,DAL,IRC
RN^60@6491%&	6,490	1/8	C, N, R	H, J, K, C, E	B, D, F	S	P, R	ANG,DAL,IRC
RN^60@6571%&	6,570	1/8	C, N, R	H, J, K, C, E	B, D	S	P, R	ANG,DAL,IRC

RN^60@6651%&	6,650	1/8	C, N, R	H, J, K, C, E	B, D, F	S	P, R	ANG,DAL,IRC
RN^60@6731%&	6,730	1/8	C, N, R	H, J, K, C, E	B, D	S	P, R	ANG,DAL,IRC
RN^60@6811%&	6,810	1/8	C, N, R	H, J, K, C, E	B, D, F	S	P, R	ANG,DAL,IRC
RN^60@6901%&	6,900	1/8	C, N, R	H, J, K, C, E	B, D	S	P, R	ANG,DAL,IRC
RN^60@6981%&	6,980	1/8	C, N, R	H, J, K, C, E	B, D, F	S	P, R	ANG,DAL,IRC
RN^60@7061%&	7,060	1/8	C, N, R	H, J, K, C, E	B, D	S	P, R	ANG,DAL,IRC
RN^60@7151%&	7,150	1/8	C, N, R	H, J, K, C, E	B, D, F	S	P, R	ANG,DAL,IRC
RN^60@7231%&	7,230	1/8	C, N, R	H, J, K, C, E	B, D	S	P, R	ANG,DAL,IRC
RN^60@7321%&	7,320	1/8	C, N, R	H, J, K, C, E	B, D, F	S	P, R	ANG,DAL,IRC
RN^60@7411%&	7,410	1/8	C, N, R	H, J, K, C, E	B, D	S	P, R	ANG,DAL,IRC
RN^60@7501%&	7,500	1/8	C, N, R	H, J, K, C, E	B, D, F	S	P, R	ANG,DAL,IRC
RN^60@7591%&	7,590	1/8	C, N, R	H, J, K, C, E	B, D	S	P, R	ANG,DAL,IRC
RN^60@7681%&	7,680	1/8	C, N, R	H, J, K, C, E	B, D, F	S	P, R	ANG,DAL,IRC
RN^60@7771%&	7,770	1/8	C, N, R	H, J, K, C, E	B, D	S	P, R	ANG,DAL,IRC
RN^60@7871%&	7,870	1/8	C, N, R	H, J, K, C, E	B, D, F	S	P, R	ANG,DAL,IRC
RN^60@7961%&	7,960	1/8	C, N, R	H, J, K, C, E	B, D	S	P, R	ANG,DAL,IRC
RN^60@8061%&	8,060	1/8	C, N, R	H, J, K, C, E	B, D, F	S	P, R	ANG,DAL,IRC
RN^60@8161%&	8,160	1/8	C, N, R	H, J, K, C, E	B, D	S	P, R	ANG,DAL,IRC
RN^60@8251%&	8,250	1/8	C, N, R	H, J, K, C, E	B, D, F	S	P, R	ANG,DAL,IRC
RN^60@8351%&	8,350	1/8	C, N, R	H, J, K, C, E	B, D	S	P, R	ANG,DAL,IRC
RN^60@8451%&	8,450	1/8	C, N, R	H, J, K, C, E	B, D, F	S	P, R	ANG,DAL,IRC
RN^60@8561%&	8,560	1/8	C, N, R	H, J, K, C, E	B, D	S	P, R	ANG,DAL,IRC
RN^60@8661%&	8,660	1/8	C, N, R	H, J, K, C, E	B, D, F	S	P, R	ANG,DAL,IRC
RN^60@8761%&	8,760	1/8	C, N, R	H, J, K, C, E	B, D	S	P, R	ANG,DAL,IRC
RN^60@8871%&	8,870	1/8	C, N, R	H, J, K, C, E	B, D, F	S	P, R	ANG,DAL,IRC
RN^60@8981%&	8,980	1/8	C, N, R	H, J, K, C, E	B, D	S	P, R	ANG,DAL,IRC
RN^60@9091%&	9,090	1/8	C, N, R	H, J, K, C, E	B, D, F	S	P, R	ANG,DAL,IRC
RN^60@9201%&	9,200	1/8	C, N, R	H, J, K, C, E	B, D	S	P, R	ANG,DAL,IRC
RN^60@9311%&	9,310	1/8	C, N, R	H, J, K, C, E	B, D, F	S	P, R	ANG,DAL,IRC
RN^60@9421%&	9,420	1/8	C, N, R	H, J, K, C, E	B, D	S	P, R	ANG,DAL,IRC
RN^60@9531%&	9,530	1/8	C, N, R	H, J, K, C, E	B, D, F	S	P, R	ANG,DAL,IRC
RN^60@9651%&	9,650	1/8	C, N, R	H, J, K, C, E	B, D	S	P, R	ANG,DAL,IRC
RN^60@9761%&	9,760	1/8	C, N, R	H, J, K, C, E	B, D, F	S	P, R	ANG,DAL,IRC
RN^60@9881%&	9,880	1/8	C, N, R	H, J, K, C, E	B, D	S	P, R	ANG,DAL,IRC
RN^60@1002%&	10,000	1/8	C, N, R	H, J, K, C, E	B, D, F	S	P, R	ANG,DAL,IRC
RN^60@1012%&	10,100	1/8	C, N, R	H, J, K, C, E	B, D	S	P, R	ANG,DAL,IRC
RN^60@1022%&	10,200	1/8	C, N, R	H, J, K, C, E	B, D, F	S	P, R	ANG,DAL,IRC
RN^60@1042%&	10,400	1/8	C, N, R	H, J, K, C, E	B, D	S	P, R	ANG,DAL,IRC
RN^60@1052%&	10,500	1/8	C, N, R	H, J, K, C, E	B, D, F	S	P, R	ANG,DAL,IRC
RN^60@1062%&	10,600	1/8	C, N, R	H, J, K, C, E	B, D	S	P, R	ANG,DAL,IRC
RN^60@1072%&	10,700	1/8	C, N, R	H, J, K, C, E	B, D, F	S	P, R	ANG,DAL,IRC
RN^60@1092%&	10,900	1/8	C, N, R	H, J, K, C, E	B, D	S	P, R	ANG,DAL,IRC
RN^60@1102%&	11,000	1/8	C, N, R	H, J, K, C, E	B, D, F	S	P, R	ANG,DAL,IRC
RN^60@1112%&	11,100	1/8	C, N, R	H, J, K, C, E	B, D	S	P, R	ANG,DAL,IRC
RN^60@1132%&	11,300	1/8	C, N, R	H, J, K, C, E	B, D, F	S	P, R	ANG,DAL,IRC
RN^60@1142%&	11,400	1/8	C, N, R	H, J, K, C, E	B, D	S	P, R	ANG,DAL,IRC
RN^60@1152%&	11,500	1/8	C, N, R	H, J, K, C, E	B, D, F	S	P, R	ANG,DAL,IRC

RN^60@1172%&	11,700	1/8	C, N, R	H, J, K, C, E	B, D	S	P, R	ANG,DAL,IRC
RN^60@1182%&	11,800	1/8	C, N, R	H, J, K, C, E	B, D, F	S	P, R	ANG,DAL,IRC
RN^60@1202%&	12,000	1/8	C, N, R	H, J, K, C, E	B, D	S	P, R	ANG,DAL,IRC
RN^60@1212%&	12,100	1/8	C, N, R	H, J, K, C, E	B, D, F	S	P, R	ANG,DAL,IRC
RN^60@1232%&	12,300	1/8	C, N, R	H, J, K, C, E	B, D	S	P, R	ANG,DAL,IRC
RN^60@1242%&	12,400	1/8	C, N, R	H, J, K, C, E	B, D, F	S	P, R	ANG,DAL,IRC
RN^60@1262%&	12,600	1/8	C, N, R	H, J, K, C, E	B, D	S	P, R	ANG,DAL,IRC
RN^60@1272%&	12,700	1/8	C, N, R	H, J, K, C, E	B, D, F	S	P, R	ANG,DAL,IRC
RN^60@1292%&	12,900	1/8	C, N, R	H, J, K, C, E	B, D	S	P, R	ANG,DAL,IRC
RN^60@1302%&	13,000	1/8	C, N, R	H, J, K, C, E	B, D, F	S	P, R	ANG,DAL,IRC
RN^60@1322%&	13,200	1/8	C, N, R	H, J, K, C, E	B, D	S	P, R	ANG,DAL,IRC
RN^60@1332%&	13,300	1/8	C, N, R	H, J, K, C, E	B, D, F	S	P, R	ANG,DAL,IRC
RN^60@1352%&	13,500	1/8	C, N, R	H, J, K, C, E	B, D	S	P, R	ANG,DAL,IRC
RN^60@1372%&	13,700	1/8	C, N, R	H, J, K, C, E	B, D, F	S	P, R	ANG,DAL,IRC
RN^60@1382%&	13,800	1/8	C, N, R	H, J, K, C, E	B, D	S	P, R	ANG,DAL,IRC
RN^60@1402%&	14,000	1/8	C, N, R	H, J, K, C, E	B, D, F	S	P, R	ANG,DAL,IRC
RN^60@1422%&	14,200	1/8	C, N, R	H, J, K, C, E	B, D	S	P, R	ANG,DAL,IRC
RN^60@1432%&	14,300	1/8	C, N, R	H, J, K, C, E	B, D, F	S	P, R	ANG,DAL,IRC
RN^60@1452%&	14,500	1/8	C, N, R	H, J, K, C, E	B, D	S	P, R	ANG,DAL,IRC
RN^60@1472%&	14,700	1/8	C, N, R	H, J, K, C, E	B, D, F	S	P, R	ANG,DAL,IRC
RN^60@1492%&	14,900	1/8	C, N, R	H, J, K, C, E	B, D	S	P, R	ANG,DAL,IRC
RN^60@1502%&	15,000	1/8	C, N, R	H, J, K, C, E	B, D, F	S	P, R	ANG,DAL,IRC
RN^60@1522%&	15,200	1/8	C, N, R	H, J, K, C, E	B, D	S	P, R	ANG,DAL,IRC
RN^60@1542%&	15,400	1/8	C, N, R	H, J, K, C, E	B, D, F	S	P, R	ANG,DAL,IRC
RN^60@1562%&	15,600	1/8	C, N, R	H, J, K, C, E	B, D	S	P, R	ANG,DAL,IRC
RN^60@1582%&	15,800	1/8	C, N, R	H, J, K, C, E	B, D, F	S	P, R	ANG,DAL,IRC
RN^60@1602%&	16,000	1/8	C, N, R	H, J, K, C, E	B, D	S	P, R	ANG,DAL,IRC
RN^60@1622%&	16,200	1/8	C, N, R	H, J, K, C, E	B, D, F	S	P, R	ANG,DAL,IRC
RN^60@1642%&	16,400	1/8	C, N, R	H, J, K, C, E	B, D	S	P, R	ANG,DAL,IRC
RN^60@1652%&	16,500	1/8	C, N, R	H, J, K, C, E	B, D, F	S	P, R	ANG,DAL,IRC
RN^60@1672%&	16,700	1/8	C, N, R	H, J, K, C, E	B, D	S	P, R	ANG,DAL,IRC
RN^60@1692%&	16,900	1/8	C, N, R	H, J, K, C, E	B, D, F	S	P, R	ANG,DAL,IRC
RN^60@1722%&	17,200	1/8	C, N, R	H, J, K, C, E	B, D	S	P, R	ANG,DAL,IRC
RN^60@1742%&	17,400	1/8	C, N, R	H, J, K, C, E	B, D, F	S	P, R	ANG,DAL,IRC
RN^60@1762%&	17,600	1/8	C, N, R	H, J, K, C, E	B, D	S	P, R	ANG,DAL,IRC
RN^60@1782%&	17,800	1/8	C, N, R	H, J, K, C, E	B, D, F	S	P, R	ANG,DAL,IRC
RN^60@1802%&	18,000	1/8	C, N, R	H, J, K, C, E	B, D	S	P, R	ANG,DAL,IRC
RN^60@1822%&	18,200	1/8	C, N, R	H, J, K, C, E	B, D, F	S	P, R	ANG,DAL,IRC
RN^60@1842%&	18,400	1/8	C, N, R	H, J, K, C, E	B, D	S	P, R	ANG,DAL,IRC
RN^60@1872%&	18,700	1/8	C, N, R	H, J, K, C, E	B, D, F	S	P, R	ANG,DAL,IRC
RN^60@1892%&	18,900	1/8	C, N, R	H, J, K, C, E	B, D	S	P, R	ANG,DAL,IRC
RN^60@1912%&	19,100	1/8	C, N, R	H, J, K, C, E	B, D, F	S	P, R	ANG,DAL,IRC
RN^60@1932%&	19,300	1/8	C, N, R	H, J, K, C, E	B, D	S	P, R	ANG,DAL,IRC
RN^60@1962%&	19,600	1/8	C, N, R	H, J, K, C, E	B, D, F	S	P, R	ANG,DAL,IRC
RN^60@1982%&	19,800	1/8	C, N, R	H, J, K, C, E	B, D	S	P, R	ANG,DAL,IRC
RN^60@2002%&	20,000	1/8	C, N, R	H, J, K, C, E	B, D, F	S	P, R	ANG,DAL,IRC
RN^60@2032%&	20,300	1/8	C, N, R	H, J, K, C, E	B, D	S	P, R	ANG,DAL,IRC

RN^60@2052%&	20,500	1/8	C, N, R	H, J, K, C, E	B, D, F	S	P, R	ANG,DAL,IRC
RN^60@2082%&	20,800	1/8	C, N, R	H, J, K, C, E	B, D	S	P, R	ANG,DAL,IRC
RN^60@2102%&	21,000	1/8	C, N, R	H, J, K, C, E	B, D, F	S	P, R	ANG,DAL,IRC
RN^60@2132%&	21,300	1/8	C, N, R	H, J, K, C, E	B, D	S	P, R	ANG,DAL,IRC
RN^60@2152%&	21,500	1/8	C, N, R	H, J, K, C, E	B, D, F	S	P, R	ANG,DAL,IRC
RN^60@2182%&	21,800	1/8	C, N, R	H, J, K, C, E	B, D	S	P, R	ANG,DAL,IRC
RN^60@2212%&	22,100	1/8	C, N, R	H, J, K, C, E	B, D, F	S	P, R	ANG,DAL,IRC
RN^60@2232%&	22,300	1/8	C, N, R	H, J, K, C, E	B, D	S	P, R	ANG,DAL,IRC
RN^60@2262%&	22,600	1/8	C, N, R	H, J, K, C, E	B, D, F	S	P, R	ANG,DAL,IRC
RN^60@2292%&	22,900	1/8	C, N, R	H, J, K, C, E	B, D	S	P, R	ANG,DAL,IRC
RN^60@2322%&	23,200	1/8	C, N, R	H, J, K, C, E	B, D, F	S	P, R	ANG,DAL,IRC
RN^60@2342%&	23,400	1/8	C, N, R	H, J, K, C, E	B, D	S	P, R	ANG,DAL,IRC
RN^60@2372%&	23,700	1/8	C, N, R	H, J, K, C, E	B, D, F	S	P, R	ANG,DAL,IRC
RN^60@2402%&	24,000	1/8	C, N, R	H, J, K, C, E	B, D	S	P, R	ANG,DAL,IRC
RN^60@2432%&	24,300	1/8	C, N, R	H, J, K, C, E	B, D, F	S	P, R	ANG,DAL,IRC
RN^60@2462%&	24,600	1/8	C, N, R	H, J, K, C, E	B, D	S	P, R	ANG,DAL,IRC
RN^60@2492%&	24,900	1/8	C, N, R	H, J, K, C, E	B, D, F	S	P, R	ANG,DAL,IRC
RN^60@2522%&	25,200	1/8	C, N, R	H, J, K, C, E	B, D	S	P, R	ANG,DAL,IRC
RN^60@2552%&	25,500	1/8	C, N, R	H, J, K, C, E	B, D, F	S	P, R	ANG,DAL,IRC
RN^60@2582%&	25,800	1/8	C, N, R	H, J, K, C, E	B, D	S	P, R	ANG,DAL,IRC
RN^60@2612%&	26,100	1/8	C, N, R	H, J, K, C, E	B, D, F	S	P, R	ANG,DAL,IRC
RN^60@2642%&	26,400	1/8	C, N, R	H, J, K, C, E	B, D	S	P, R	ANG,DAL,IRC
RN^60@2672%&	26,700	1/8	C, N, R	H, J, K, C, E	B, D, F	S	P, R	ANG,DAL,IRC
RN^60@2712%&	27,100	1/8	C, N, R	H, J, K, C, E	B, D	S	P, R	ANG,DAL,IRC
RN^60@2742%&	27,400	1/8	C, N, R	H, J, K, C, E	B, D, F	S	P, R	ANG,DAL,IRC
RN^60@2772%&	27,700	1/8	C, N, R	H, J, K, C, E	B, D	S	P, R	ANG,DAL,IRC
RN^60@2802%&	28,000	1/8	C, N, R	H, J, K, C, E	B, D, F	S	P, R	ANG,DAL,IRC
RN^60@2842%&	28,400	1/8	C, N, R	H, J, K, C, E	B, D	S	P, R	ANG,DAL,IRC
RN^60@2872%&	28,700	1/8	C, N, R	H, J, K, C, E	B, D, F	S	P, R	ANG,DAL,IRC
RN^60@2912%&	29,100	1/8	C, N, R	H, J, K, C, E	B, D	S	P, R	ANG,DAL,IRC
RN^60@2942%&	29,400	1/8	C, N, R	H, J, K, C, E	B, D, F	S	P, R	ANG,DAL,IRC
RN^60@2982%&	29,800	1/8	C, N, R	H, J, K, C, E	B, D	S	P, R	ANG,DAL,IRC
RN^60@3012%&	30,100	1/8	C, N, R	H, J, K, C, E	B, D, F	S	P, R	ANG,DAL,IRC
RN^60@3052%&	30,500	1/8	C, N, R	H, J, K, C, E	B, D	S	P, R	ANG,DAL,IRC
RN^60@3092%&	30,900	1/8	C, N, R	H, J, K, C, E	B, D, F	S	P, R	ANG,DAL,IRC
RN^60@3122%&	31,200	1/8	C, N, R	H, J, K, C, E	B, D	S	P, R	ANG,DAL,IRC
RN^60@3162%&	31,600	1/8	C, N, R	H, J, K, C, E	B, D, F	S	P, R	ANG,DAL,IRC
RN^60@3202%&	32,000	1/8	C, N, R	H, J, K, C, E	B, D	S	P, R	ANG,DAL,IRC
RN^60@3242%&	32,400	1/8	C, N, R	H, J, K, C, E	B, D, F	S	P, R	ANG,DAL,IRC
RN^60@3282%&	32,800	1/8	C, N, R	H, J, K, C, E	B, D	S	P, R	ANG,DAL,IRC
RN^60@3322%&	33,200	1/8	C, N, R	H, J, K, C, E	B, D, F	S	P, R	ANG,DAL,IRC
RN^60@3362%&	33,600	1/8	C, N, R	H, J, K, C, E	B, D	S	P, R	ANG,DAL,IRC
RN^60@3402%&	34,000	1/8	C, N, R	H, J, K, C, E	B, D, F	S	P, R	ANG,DAL,IRC
RN^60@3442%&	34,400	1/8	C, N, R	H, J, K, C, E	B, D	S	P, R	ANG,DAL,IRC
RN^60@3482%&	34,800	1/8	C, N, R	H, J, K, C, E	B, D, F	S	P, R	ANG,DAL,IRC
RN^60@3522%&	35,200	1/8	C, N, R	H, J, K, C, E	B, D	S	P, R	ANG,DAL,IRC
RN^60@3572%&	35,700	1/8	C, N, R	H, J, K, C, E	B, D, F	S	P, R	ANG,DAL,IRC

RN^60@3612%&	36,100	1/8	C, N, R	H, J, K, C, E	B, D	S	P, R	ANG,DAL,IRC
RN^60@3652%&	36,500	1/8	C, N, R	H, J, K, C, E	B, D, F	S	P, R	ANG,DAL,IRC
RN^60@3702%&	37,000	1/8	C, N, R	H, J, K, C, E	B, D	S	P, R	ANG,DAL,IRC
RN^60@3742%&	37,400	1/8	C, N, R	H, J, K, C, E	B, D, F	S	P, R	ANG,DAL,IRC
RN^60@3792%&	37,900	1/8	C, N, R	H, J, K, C, E	B, D	S	P, R	ANG,DAL,IRC
RN^60@3832%&	38,300	1/8	C, N, R	H, J, K, C, E	B, D, F	S	P, R	ANG,DAL,IRC
RN^60@3882%&	38,800	1/8	C, N, R	H, J, K, C, E	B, D	S	P, R	ANG,DAL,IRC
RN^60@3922%&	39,200	1/8	C, N, R	H, J, K, C, E	B, D, F	S	P, R	ANG,DAL,IRC
RN^60@3972%&	39,700	1/8	C, N, R	H, J, K, C, E	B, D	S	P, R	ANG,DAL,IRC
RN^60@4022%&	40,200	1/8	C, N, R	H, J, K, C, E	B, D, F	S	P, R	ANG,DAL,IRC
RN^60@4072%&	40,700	1/8	C, N, R	H, J, K, C, E	B, D	S	P, R	ANG,DAL,IRC
RN^60@4122%&	41,200	1/8	C, N, R	H, J, K, C, E	B, D, F	S	P, R	ANG,DAL,IRC
RN^60@4172%&	41,700	1/8	C, N, R	H, J, K, C, E	B, D	S	P, R	ANG,DAL,IRC
RN^60@4222%&	42,200	1/8	C, N, R	H, J, K, C, E	B, D, F	S	P, R	ANG,DAL,IRC
RN^60@4272%&	42,700	1/8	C, N, R	H, J, K, C, E	B, D	S	P, R	ANG,DAL,IRC
RN^60@4322%&	43,200	1/8	C, N, R	H, J, K, C, E	B, D, F	S	P, R	ANG,DAL,IRC
RN^60@4372%&	43,700	1/8	C, N, R	H, J, K, C, E	B, D	S	P, R	ANG,DAL,IRC
RN^60@4422%&	44,200	1/8	C, N, R	H, J, K, C, E	B, D, F	S	P, R	ANG,DAL,IRC
RN^60@4482%&	44,800	1/8	C, N, R	H, J, K, C, E	B, D	S	P, R	ANG,DAL,IRC
RN^60@4532%&	45,300	1/8	C, N, R	H, J, K, C, E	B, D, F	S	P, R	ANG,DAL,IRC
RN^60@4592%&	45,900	1/8	C, N, R	H, J, K, C, E	B, D	S	P, R	ANG,DAL,IRC
RN^60@4642%&	46,400	1/8	C, N, R	H, J, K, C, E	B, D, F	S	P, R	ANG,DAL,IRC
RN^60@4702%&	47,000	1/8	C, N, R	H, J, K, C, E	B, D	S	P, R	ANG,DAL,IRC
RN^60@4752%&	47,500	1/8	C, N, R	H, J, K, C, E	B, D, F	S	P, R	ANG,DAL,IRC
RN^60@4812%&	48,100	1/8	C, N, R	H, J, K, C, E	B, D	S	P, R	ANG,DAL,IRC
RN^60@4872%&	48,700	1/8	C, N, R	H, J, K, C, E	B, D, F	S	P, R	ANG,DAL,IRC
RN^60@4932%&	49,300	1/8	C, N, R	H, J, K, C, E	B, D	S	P, R	ANG,DAL,IRC
RN^60@4992%&	49,900	1/8	C, N, R	H, J, K, C, E	B, D, F	S	P, R	ANG,DAL,IRC
RN^60@5052%&	50,500	1/8	C, N, R	H, J, K, C, E	B, D	S	P, R	ANG,DAL,IRC
RN^60@5112%&	51,100	1/8	C, N, R	H, J, K, C, E	B, D, F	S	P, R	ANG,DAL,IRC
RN^60@5172%&	51,700	1/8	C, N, R	H, J, K, C, E	B, D	S	P, R	ANG,DAL,IRC
RN^60@5232%&	52,300	1/8	C, N, R	H, J, K, C, E	B, D, F	S	P, R	ANG,DAL,IRC
RN^60@5302%&	53,000	1/8	C, N, R	H, J, K, C, E	B, D	S	P, R	ANG,DAL,IRC
RN^60@5362%&	53,600	1/8	C, N, R	H, J, K, C, E	B, D, F	S	P, R	ANG,DAL,IRC
RN^60@5422%&	54,200	1/8	C, N, R	H, J, K, C, E	B, D	S	P, R	ANG,DAL,IRC
RN^60@5492%&	54,900	1/8	C, N, R	H, J, K, C, E	B, D, F	S	P, R	ANG,DAL,IRC
RN^60@5562%&	55,600	1/8	C, N, R	H, J, K, C, E	B, D	S	P, R	ANG,DAL,IRC
RN^60@5622%&	56,200	1/8	C, N, R	H, J, K, C, E	B, D, F	S	P, R	ANG,DAL,IRC
RN^60@5692%&	56,900	1/8	C, N, R	H, J, K, C, E	B, D	S	P, R	ANG,DAL,IRC
RN^60@5762%&	57,600	1/8	C, N, R	H, J, K, C, E	B, D, F	S	P, R	ANG,DAL,IRC
RN^60@5832%&	58,300	1/8	C, N, R	H, J, K, C, E	B, D	S	P, R	ANG,DAL,IRC
RN^60@5902%&	59,000	1/8	C, N, R	H, J, K, C, E	B, D, F	S	P, R	ANG,DAL,IRC
RN^60@5972%&	59,700	1/8	C, N, R	H, J, K, C, E	B, D	S	P, R	ANG,DAL,IRC
RN^60@6042%&	60,400	1/8	C, N, R	H, J, K, C, E	B, D, F	S	P, R	ANG,DAL,IRC
RN^60@6122%&	61,200	1/8	C, N, R	H, J, K, C, E	B, D	S	P, R	ANG,DAL,IRC
RN^60@6192%&	61,900	1/8	C, N, R	H, J, K, C, E	B, D, F	S	P, R	ANG,DAL,IRC
RN^60@6262%&	62,600	1/8	C, N, R	H, J, K, C, E	B, D	S	P, R	ANG,DAL,IRC

RN^60@6342%&	63,400	1/8	C, N, R	H, J, K, C, E	B, D, F	S	P, R	ANG,DAL,IRC
RN^60@6422%&	64,200	1/8	C, N, R	H, J, K, C, E	B, D	S	P, R	ANG,DAL,IRC
RN^60@6492%&	64,900	1/8	C, N, R	H, J, K, C, E	B, D, F	S	P, R	ANG,DAL,IRC
RN^60@6572%&	65,700	1/8	C, N, R	H, J, K, C, E	B, D	S	P, R	ANG,DAL,IRC
RN^60@6652%&	66,500	1/8	C, N, R	H, J, K, C, E	B, D, F	S	P, R	ANG,DAL,IRC
RN^60@6732%&	67,300	1/8	C, N, R	H, J, K, C, E	B, D	S	P, R	ANG,DAL,IRC
RN^60@6812%&	68,100	1/8	C, N, R	H, J, K, C, E	B, D, F	S	P, R	ANG,DAL,IRC
RN^60@6902%&	69,000	1/8	C, N, R	H, J, K, C, E	B, D	S	P, R	ANG,DAL,IRC
RN^60@6982%&	69,800	1/8	C, N, R	H, J, K, C, E	B, D, F	S	P, R	ANG,DAL,IRC
RN^60@7062%&	70,600	1/8	C, N, R	H, J, K, C, E	B, D	S	P, R	ANG,DAL,IRC
RN^60@7152%&	71,500	1/8	C, N, R	H, J, K, C, E	B, D, F	S	P, R	ANG,DAL,IRC
RN^60@7232%&	72,300	1/8	C, N, R	H, J, K, C, E	B, D	S	P, R	ANG,DAL,IRC
RN^60@7322%&	73,200	1/8	C, N, R	H, J, K, C, E	B, D, F	S	P, R	ANG,DAL,IRC
RN^60@7412%&	74,100	1/8	C, N, R	H, J, K, C, E	B, D	S	P, R	ANG,DAL,IRC
RN^60@7502%&	75,000	1/8	C, N, R	H, J, K, C, E	B, D, F	S	P, R	ANG,DAL,IRC
RN^60@7592%&	75,900	1/8	C, N, R	H, J, K, C, E	B, D	S	P, R	ANG,DAL,IRC
RN^60@7682%&	76,800	1/8	C, N, R	H, J, K, C, E	B, D, F	S	P, R	ANG,DAL,IRC
RN^60@7772%&	77,700	1/8	C, N, R	H, J, K, C, E	B, D	S	P, R	ANG,DAL,IRC
RN^60@7872%&	78,700	1/8	C, N, R	H, J, K, C, E	B, D, F	S	P, R	ANG,DAL,IRC
RN^60@7962%&	79,600	1/8	C, N, R	H, J, K, C, E	B, D	S	P, R	ANG,DAL,IRC
RN^60@8062%&	80,600	1/8	C, N, R	H, J, K, C, E	B, D, F	S	P, R	ANG,DAL,IRC
RN^60@8162%&	81,600	1/8	C, N, R	H, J, K, C, E	B, D	S	P, R	ANG,DAL,IRC
RN^60@8252%&	82,500	1/8	C, N, R	H, J, K, C, E	B, D, F	S	P, R	ANG,DAL,IRC
RN^60@8352%&	83,500	1/8	C, N, R	H, J, K, C, E	B, D	S	P, R	ANG,DAL,IRC
RN^60@8452%&	84,500	1/8	C, N, R	H, J, K, C, E	B, D, F	S	P, R	ANG,DAL,IRC
RN^60@8562%&	85,600	1/8	C, N, R	H, J, K, C, E	B, D	S	P, R	ANG,DAL,IRC
RN^60@8662%&	86,600	1/8	C, N, R	H, J, K, C, E	B, D, F	S	P, R	ANG,DAL,IRC
RN^60@8762%&	87,600	1/8	C, N, R	H, J, K, C, E	B, D	S	P, R	ANG,DAL,IRC
RN^60@8872%&	88,700	1/8	C, N, R	H, J, K, C, E	B, D, F	S	P, R	ANG,DAL,IRC
RN^60@8982%&	89,800	1/8	C, N, R	H, J, K, C, E	B, D	S	P, R	ANG,DAL,IRC
RN^60@9092%&	90,900	1/8	C, N, R	H, J, K, C, E	B, D, F	S	P, R	ANG,DAL,IRC
RN^60@9202%&	92,000	1/8	C, N, R	H, J, K, C, E	B, D	S	P, R	ANG,DAL,IRC
RN^60@9312%&	93,100	1/8	C, N, R	H, J, K, C, E	B, D, F	S	P, R	ANG,DAL,IRC
RN^60@9422%&	94,200	1/8	C, N, R	H, J, K, C, E	B, D	S	P, R	ANG,DAL,IRC
RN^60@9532%&	95,300	1/8	C, N, R	H, J, K, C, E	B, D, F	S	P, R	ANG,DAL,IRC
RN^60@9652%&	96,500	1/8	C, N, R	H, J, K, C, E	B, D	S	P, R	ANG,DAL,IRC
RN^60@9762%&	97,600	1/8	C, N, R	H, J, K, C, E	B, D, F	S	P, R	ANG,DAL,IRC
RN^60@9882%&	98,800	1/8	C, N, R	H, J, K, C, E	B, D	S	P, R	ANG,DAL,IRC
RN^60@1003%&	100,000	1/8	C, N, R	H, J, K, C, E	B, D, F	S	P, R	ANG,DAL,IRC
RN^60@1013%&	101,000	1/8	C, N, R	H, J, K, C, E	B, D	S	P, R	ANG, DAL
RN^60@1023%&	102,000	1/8	C, N, R	H, J, K, C, E	B, D, F	S	P, R	ANG, DAL
RN^60@1043%&	104,000	1/8	C, N, R	H, J, K, C, E	B, D	S	P, R	ANG, DAL
RN^60@1053%&	105,000	1/8	C, N, R	H, J, K, C, E	B, D, F	S	P, R	ANG, DAL
RN^60@1063%&	106,000	1/8	C, N, R	H, J, K, C, E	B, D	S	P, R	ANG, DAL
RN^60@1073%&	107,000	1/8	C, N, R	H, J, K, C, E	B, D, F	S	P, R	ANG, DAL
RN^60@1093%&	109,000	1/8	C, N, R	H, J, K, C, E	B, D	S	P, R	ANG, DAL
RN^60@1103%&	110,000	1/8	C, N, R	H, J, K, C, E	B, D, F	S	P, R	ANG, DAL

RN^60@1113%&	111,000	1/8	C, N, R	H, J, K, C, E	B, D	S	P, R	ANG, DAL
RN^60@1133%&	113,000	1/8	C, N, R	H, J, K, C, E	B, D, F	S	P, R	ANG, DAL
RN^60@1143%&	114,000	1/8	C, N, R	H, J, K, C, E	B, D	S	P, R	ANG, DAL
RN^60@1153%&	115,000	1/8	C, N, R	H, J, K, C, E	B, D, F	S	P, R	ANG, DAL
RN^60@1173%&	117,000	1/8	C, N, R	H, J, K, C, E	B, D	S	P, R	ANG, DAL
RN^60@1183%&	118,000	1/8	C, N, R	H, J, K, C, E	B, D, F	S	P, R	ANG, DAL
RN^60@1203%&	120,000	1/8	C, N, R	H, J, K, C, E	B, D	S	P, R	ANG, DAL
RN^60@1213%&	121,000	1/8	C, N, R	H, J, K, C, E	B, D, F	S	P, R	ANG, DAL
RN^60@1233%&	123,000	1/8	C, N, R	H, J, K, C, E	B, D	S	P, R	ANG, DAL
RN^60@1243%&	124,000	1/8	C, N, R	H, J, K, C, E	B, D, F	S	P, R	ANG, DAL
RN^60@1263%&	126,000	1/8	C, N, R	H, J, K, C, E	B, D	S	P, R	ANG, DAL
RN^60@1273%&	127,000	1/8	C, N, R	H, J, K, C, E	B, D, F	S	P, R	ANG, DAL
RN^60@1293%&	129,000	1/8	C, N, R	H, J, K, C, E	B, D	S	P, R	ANG, DAL
RN^60@1303%&	130,000	1/8	C, N, R	H, J, K, C, E	B, D, F	S	P, R	ANG, DAL
RN^60@1323%&	132,000	1/8	C, N, R	H, J, K, C, E	B, D	S	P, R	ANG, DAL
RN^60@1333%&	133,000	1/8	C, N, R	H, J, K, C, E	B, D, F	S	P, R	ANG, DAL
RN^60@1353%&	135,000	1/8	C, N, R	H, J, K, C, E	B, D	S	P, R	ANG, DAL
RN^60@1373%&	137,000	1/8	C, N, R	H, J, K, C, E	B, D, F	S	P, R	ANG, DAL
RN^60@1383%&	138,000	1/8	C, N, R	H, J, K, C, E	B, D	S	P, R	ANG, DAL
RN^60@1403%&	140,000	1/8	C, N, R	H, J, K, C, E	B, D, F	S	P, R	ANG, DAL
RN^60@1423%&	142,000	1/8	C, N, R	H, J, K, C, E	B, D	S	P, R	ANG, DAL
RN^60@1433%&	143,000	1/8	C, N, R	H, J, K, C, E	B, D, F	S	P, R	ANG, DAL
RN^60@1453%&	145,000	1/8	C, N, R	H, J, K, C, E	B, D	S	P, R	ANG, DAL
RN^60@1473%&	147,000	1/8	C, N, R	H, J, K, C, E	B, D, F	S	P, R	ANG, DAL
RN^60@1493%&	149,000	1/8	C, N, R	H, J, K, C, E	B, D	S	P, R	ANG, DAL
RN^60@1503%&	150,000	1/8	C, N, R	H, J, K, C, E	B, D, F	S	P, R	ANG, DAL
RN^60@1523%&	152,000	1/8	C, N, R	H, J, K, C, E	B, D	S	P, R	ANG, DAL
RN^60@1543%&	154,000	1/8	C, N, R	H, J, K, C, E	B, D, F	S	P, R	ANG, DAL
RN^60@1563%&	156,000	1/8	C, N, R	H, J, K, C, E	B, D	S	P, R	ANG, DAL
RN^60@1583%&	158,000	1/8	C, N, R	H, J, K, C, E	B, D, F	S	P, R	ANG, DAL
RN^60@1603%&	160,000	1/8	C, N, R	H, J, K, C, E	B, D	S	P, R	ANG, DAL
RN^60@1623%&	162,000	1/8	C, N, R	H, J, K, C, E	B, D, F	S	P, R	ANG, DAL
RN^60@1643%&	164,000	1/8	C, N, R	H, J, K, C, E	B, D	S	P, R	ANG, DAL
RN^60@1653%&	165,000	1/8	C, N, R	H, J, K, C, E	B, D, F	S	P, R	ANG, DAL
RN^60@1673%&	167,000	1/8	C, N, R	H, J, K, C, E	B, D	S	P, R	ANG, DAL
RN^60@1693%&	169,000	1/8	C, N, R	H, J, K, C, E	B, D, F	S	P, R	ANG, DAL
RN^60@1723%&	172,000	1/8	C, N, R	H, J, K, C, E	B, D	S	P, R	ANG, DAL
RN^60@1743%&	174,000	1/8	C, N, R	H, J, K, C, E	B, D, F	S	P, R	ANG, DAL
RN^60@1763%&	176,000	1/8	C, N, R	H, J, K, C, E	B, D	S	P, R	ANG, DAL
RN^60@1783%&	178,000	1/8	C, N, R	H, J, K, C, E	B, D, F	S	P, R	ANG, DAL
RN^60@1803%&	180,000	1/8	C, N, R	H, J, K, C, E	B, D	S	P, R	ANG, DAL
RN^60@1823%&	182,000	1/8	C, N, R	H, J, K, C, E	B, D, F	S	P, R	ANG, DAL
RN^60@1843%&	184,000	1/8	C, N, R	H, J, K, C, E	B, D	S	P, R	ANG, DAL
RN^60@1873%&	187,000	1/8	C, N, R	H, J, K, C, E	B, D, F	S	P, R	ANG, DAL
RN^60@1893%&	189,000	1/8	C, N, R	H, J, K, C, E	B, D	S	P, R	ANG, DAL
RN^60@1913%&	191,000	1/8	C, N, R	H, J, K, C, E	B, D, F	S	P, R	ANG, DAL
RN^60@1933%&	193,000	1/8	C, N, R	H, J, K, C, E	B, D	S	P, R	ANG, DAL

RN^60@1963%&	196,000	1/8	C, N, R	H, J, K, C, E	B, D, F	S	P, R	ANG, DAL
RN^60@1983%&	198,000	1/8	C, N, R	H, J, K, C, E	B, D	S	P, R	ANG, DAL
RN^60@2003%&	200,000	1/8	C, N, R	H, J, K, C, E	B, D, F	S	P, R	ANG, DAL
RN^60@2033%&	203,000	1/8	C, N, R	H, J, K, C, E	B, D	S	P, R	ANG, DAL
RN^60@2053%&	205,000	1/8	C, N, R	H, J, K, C, E	B, D, F	S	P, R	ANG, DAL
RN^60@2083%&	208,000	1/8	C, N, R	H, J, K, C, E	B, D	S	P, R	ANG, DAL
RN^60@2103%&	210,000	1/8	C, N, R	H, J, K, C, E	B, D, F	S	P, R	ANG, DAL
RN^60@2133%&	213,000	1/8	C, N, R	H, J, K, C, E	B, D	S	P, R	ANG, DAL
RN^60@2153%&	215,000	1/8	C, N, R	H, J, K, C, E	B, D, F	S	P, R	ANG, DAL
RN^60@2183%&	218,000	1/8	C, N, R	H, J, K, C, E	B, D	S	P, R	ANG, DAL
RN^60@2213%&	221,000	1/8	C, N, R	H, J, K, C, E	B, D, F	S	P, R	ANG, DAL
RN^60@2233%&	223,000	1/8	C, N, R	H, J, K, C, E	B, D	S	P, R	ANG, DAL
RN^60@2263%&	226,000	1/8	C, N, R	H, J, K, C, E	B, D, F	S	P, R	ANG, DAL
RN^60@2293%&	229,000	1/8	C, N, R	H, J, K, C, E	B, D	S	P, R	ANG, DAL
RN^60@2323%&	232,000	1/8	C, N, R	H, J, K, C, E	B, D, F	S	P, R	ANG, DAL
RN^60@2343%&	234,000	1/8	C, N, R	H, J, K, C, E	B, D	S	P, R	ANG, DAL
RN^60@2373%&	237,000	1/8	C, N, R	H, J, K, C, E	B, D, F	S	P, R	ANG, DAL
RN^60@2403%&	240,000	1/8	C, N, R	H, J, K, C, E	B, D	S	P, R	ANG, DAL
RN^60@2433%&	243,000	1/8	C, N, R	H, J, K, C, E	B, D, F	S	P, R	ANG, DAL
RN^60@2463%&	246,000	1/8	C, N, R	H, J, K, C, E	B, D	S	P, R	ANG, DAL
RN^60@2493%&	249,000	1/8	C, N, R	H, J, K, C, E	B, D, F	S	P, R	ANG, DAL
RN^60@2523%&	252,000	1/8	C, N, R	H, J, K, C, E	B, D	S	P, R	ANG, DAL
RN^60@2553%&	255,000	1/8	C, N, R	H, J, K, C, E	B, D, F	S	P, R	ANG, DAL
RN^60@2583%&	258,000	1/8	C, N, R	H, J, K, C, E	B, D	S	P, R	ANG, DAL
RN^60@2613%&	261,000	1/8	C, N, R	H, J, K, C, E	B, D, F	S	P, R	ANG, DAL
RN^60@2643%&	264,000	1/8	C, N, R	H, J, K, C, E	B, D	S	P, R	ANG, DAL
RN^60@2673%&	267,000	1/8	C, N, R	H, J, K, C, E	B, D, F	S	P, R	ANG, DAL
RN^60@2713%&	271,000	1/8	C, N, R	H, J, K, C, E	B, D	S	P, R	ANG, DAL
RN^60@2743%&	274,000	1/8	C, N, R	H, J, K, C, E	B, D, F	S	P, R	ANG, DAL
RN^60@2773%&	277,000	1/8	C, N, R	H, J, K, C, E	B, D	S	P, R	ANG, DAL
RN^60@2803%&	280,000	1/8	C, N, R	H, J, K, C, E	B, D, F	S	P, R	ANG, DAL
RN^60@2843%&	284,000	1/8	C, N, R	H, J, K, C, E	B, D	S	P, R	ANG, DAL
RN^60@2873%&	287,000	1/8	C, N, R	H, J, K, C, E	B, D, F	S	P, R	ANG, DAL
RN^60@2913%&	291,000	1/8	C, N, R	H, J, K, C, E	B, D	S	P, R	ANG, DAL
RN^60@2943%&	294,000	1/8	C, N, R	H, J, K, C, E	B, D, F	S	P, R	ANG, DAL
RN^60@2983%&	298,000	1/8	C, N, R	H, J, K, C, E	B, D	S	P, R	ANG, DAL
RN^60@3013%&	301,000	1/8	C, N, R	H, J, K, C, E	B, D, F	S	P, R	ANG, DAL
RN^60@3053%&	305,000	1/8	C, N, R	H, J, K, C, E	B, D	S	P, R	ANG, DAL
RN^60@3093%&	309,000	1/8	C, N, R	H, J, K, C, E	B, D, F	S	P, R	ANG, DAL
RN^60@3123%&	312,000	1/8	C, N, R	H, J, K, C, E	B, D	S	P, R	ANG, DAL
RN^60@3163%&	316,000	1/8	C, N, R	H, J, K, C, E	B, D, F	S	P, R	ANG, DAL
RN^60@3203%&	320,000	1/8	C, N, R	H, J, K, C, E	B, D	S	P, R	ANG, DAL
RN^60@3243%&	324,000	1/8	C, N, R	H, J, K, C, E	B, D, F	S	P, R	ANG, DAL
RN^60@3283%&	328,000	1/8	C, N, R	H, J, K, C, E	B, D	S	P, R	ANG, DAL
RN^60@3323%&	332,000	1/8	C, N, R	H, J, K, C, E	B, D, F	S	P, R	ANG, DAL
RN^60@3363%&	336,000	1/8	C, N, R	H, J, K, C, E	B, D	S	P, R	ANG, DAL
RN^60@3403%&	340,000	1/8	C, N, R	H, J, K, C, E	B, D, F	S	P, R	ANG, DAL

RN^60@3443%&	344,000	1/8	C, N, R	H, J, K, C, E	B, D	S	P, R	ANG, DAL
RN^60@3483%&	348,000	1/8	C, N, R	H, J, K, C, E	B, D, F	S	P, R	ANG, DAL
RN^60@3523%&	352,000	1/8	C, N, R	H, J, K, C, E	B, D	S	P, R	ANG, DAL
RN^60@3573%&	357,000	1/8	C, N, R	H, J, K, C, E	B, D, F	S	P, R	ANG, DAL
RN^60@3613%&	361,000	1/8	C, N, R	H, J, K, C, E	B, D	S	P, R	ANG, DAL
RN^60@3653%&	365,000	1/8	C, N, R	H, J, K, C, E	B, D, F	S	P, R	ANG, DAL
RN^60@3703%&	370,000	1/8	C, N, R	H, J, K, C, E	B, D	S	P, R	ANG, DAL
RN^60@3743%&	374,000	1/8	C, N, R	H, J, K, C, E	B, D, F	S	P, R	ANG, DAL
RN^60@3793%&	379,000	1/8	C, N, R	H, J, K, C, E	B, D	S	P, R	ANG, DAL
RN^60@3833%&	383,000	1/8	C, N, R	H, J, K, C, E	B, D, F	S	P, R	ANG, DAL
RN^60@3883%&	388,000	1/8	C, N, R	H, J, K, C, E	B, D	S	P, R	ANG, DAL
RN^60@3923%&	392,000	1/8	C, N, R	H, J, K, C, E	B, D, F	S	P, R	ANG, DAL
RN^60@3973%&	397,000	1/8	C, N, R	H, J, K, C, E	B, D	S	P, R	ANG, DAL
RN^60@4023%&	402,000	1/8	C, N, R	H, J, K, C, E	B, D, F	S	P, R	ANG, DAL
RN^60@4073%&	407,000	1/8	C, N, R	H, J, K, C, E	B, D	S	P, R	ANG, DAL
RN^60@4123%&	412,000	1/8	C, N, R	H, J, K, C, E	B, D, F	S	P, R	ANG, DAL
RN^60@4173%&	417,000	1/8	C, N, R	H, J, K, C, E	B, D	S	P, R	ANG, DAL
RN^60@4223%&	422,000	1/8	C, N, R	H, J, K, C, E	B, D, F	S	P, R	ANG, DAL
RN^60@4273%&	427,000	1/8	C, N, R	H, J, K, C, E	B, D	S	P, R	ANG, DAL
RN^60@4323%&	432,000	1/8	C, N, R	H, J, K, C, E	B, D, F	S	P, R	ANG, DAL
RN^60@4373%&	437,000	1/8	C, N, R	H, J, K, C, E	B, D	S	P, R	ANG, DAL
RN^60@4423%&	442,000	1/8	C, N, R	H, J, K, C, E	B, D, F	S	P, R	ANG, DAL
RN^60@4483%&	448,000	1/8	C, N, R	H, J, K, C, E	B, D	S	P, R	ANG, DAL
RN^60@4533%&	453,000	1/8	C, N, R	H, J, K, C, E	B, D, F	S	P, R	ANG, DAL
RN^60@4593%&	459,000	1/8	C, N, R	H, J, K, C, E	B, D	S	P, R	ANG, DAL
RN^60@4643%&	464,000	1/8	C, N, R	H, J, K, C, E	B, D, F	S	P, R	ANG, DAL
RN^60@4703%&	470,000	1/8	C, N, R	H, J, K, C, E	B, D	S	P, R	ANG, DAL
RN^60@4753%&	475,000	1/8	C, N, R	H, J, K, C, E	B, D, F	S	P, R	ANG, DAL
RN^60@4813%&	481,000	1/8	C, N, R	H, J, K, C, E	B, D	S	P, R	ANG, DAL
RN^60@4873%&	487,000	1/8	C, N, R	H, J, K, C, E	B, D, F	S	P, R	ANG, DAL
RN^60@4933%&	493,000	1/8	C, N, R	H, J, K, C, E	B, D	S	P, R	ANG, DAL
RN^60@4993%&	499,000	1/8	C, N, R	H, J, K, C, E	B, D, F	S	P, R	ANG, DAL
RN^60@5053%&	505,000	1/8	C, N, R	H, J, K, C, E	B, D	S	P, R	ANG, DAL
RN^60@5113%&	511,000	1/8	C, N, R	H, J, K, C, E	B, D, F	S	P, R	ANG, DAL
RN^60@5173%&	517,000	1/8	C, N, R	H, J, K, C, E	B, D	S	P, R	ANG, DAL
RN^60@5233%&	523,000	1/8	C, N, R	H, J, K, C, E	B, D, F	S	P, R	ANG, DAL
RN^60@5303%&	530,000	1/8	C, N, R	H, J, K, C, E	B, D	S	P, R	ANG, DAL
RN^60@5363%&	536,000	1/8	C, N, R	H, J, K, C, E	B, D, F	S	P, R	ANG, DAL
RN^60@5423%&	542,000	1/8	C, N, R	H, J, K, C, E	B, D	S	P, R	ANG, DAL
RN^60@5493%&	549,000	1/8	C, N, R	H, J, K, C, E	B, D, F	S	P, R	ANG, DAL
RN^60@5563%&	556,000	1/8	C, N, R	H, J, K, C, E	B, D	S	P, R	ANG, DAL
RN^60@5623%&	562,000	1/8	C, N, R	H, J, K, C, E	B, D, F	S	P, R	ANG, DAL
RN^60@5693%&	569,000	1/8	C, N, R	H, J, K, C, E	B, D	S	P, R	ANG, DAL
RN^60@5763%&	576,000	1/8	C, N, R	H, J, K, C, E	B, D, F	S	P, R	ANG, DAL
RN^60@5833%&	583,000	1/8	C, N, R	H, J, K, C, E	B, D	S	P, R	ANG, DAL
RN^60@5903%&	590,000	1/8	C, N, R	H, J, K, C, E	B, D, F	S	P, R	ANG, DAL
RN^60@5973%&	597,000	1/8	C, N, R	H, J, K, C, E	B, D	S	P, R	ANG, DAL

RN^60@6043%&	604,000	1/8	C, N, R	H, J, K, C, E	B, D, F	S	P, R	ANG, DAL
RN^60@6123%&	612,000	1/8	C, N, R	H, J, K, C, E	B, D	S	P, R	ANG, DAL
RN^60@6193%&	619,000	1/8	C, N, R	H, J, K, C, E	B, D, F	S	P, R	ANG, DAL
RN^60@6263%&	626,000	1/8	C, N, R	H, J, K, C, E	B, D	S	P, R	ANG, DAL
RN^60@6343%&	634,000	1/8	C, N, R	H, J, K, C, E	B, D, F	S	P, R	ANG, DAL
RN^60@6423%&	642,000	1/8	C, N, R	H, J, K, C, E	B, D	S	P, R	ANG, DAL
RN^60@6493%&	649,000	1/8	C, N, R	H, J, K, C, E	B, D, F	S	P, R	ANG, DAL
RN^60@6573%&	657,000	1/8	C, N, R	H, J, K, C, E	B, D	S	P, R	ANG, DAL
RN^60@6653%&	665,000	1/8	C, N, R	H, J, K, C, E	B, D, F	S	P, R	ANG, DAL
RN^60@6733%&	673,000	1/8	C, N, R	H, J, K, C, E	B, D	S	P, R	ANG, DAL
RN^60@6813%&	681,000	1/8	C, N, R	H, J, K, C, E	B, D, F	S	P, R	ANG, DAL
RN^60@6903%&	690,000	1/8	C, N, R	H, J, K, C, E	B, D	S	P, R	ANG, DAL
RN^60@6983%&	698,000	1/8	C, N, R	H, J, K, C, E	B, D, F	S	P, R	ANG, DAL
RN^60@7063%&	706,000	1/8	C, N, R	H, J, K, C, E	B, D	S	P, R	ANG, DAL
RN^60@7153%&	715,000	1/8	C, N, R	H, J, K, C, E	B, D, F	S	P, R	ANG, DAL
RN^60@7233%&	723,000	1/8	C, N, R	H, J, K, C, E	B, D	S	P, R	ANG, DAL
RN^60@7323%&	732,000	1/8	C, N, R	H, J, K, C, E	B, D, F	S	P, R	ANG, DAL
RN^60@7413%&	741,000	1/8	C, N, R	H, J, K, C, E	B, D	S	P, R	ANG, DAL
RN^60@7503%&	750,000	1/8	C, N, R	H, J, K, C, E	B, D, F	S	P, R	ANG, DAL
RN^60@7593%&	759,000	1/8	C, N, R	H, J, K, C, E	B, D	S	P, R	ANG, DAL
RN^60@7683%&	768,000	1/8	C, N, R	H, J, K, C, E	B, D, F	S	P, R	ANG, DAL
RN^60@7773%&	777,000	1/8	C, N, R	H, J, K, C, E	B, D	S	P, R	ANG, DAL
RN^60@7873%&	787,000	1/8	C, N, R	H, J, K, C, E	B, D, F	S	P, R	ANG, DAL
RN^60@7963%&	796,000	1/8	C, N, R	H, J, K, C, E	B, D	S	P, R	ANG, DAL
RN^60@8063%&	806,000	1/8	C, N, R	H, J, K, C, E	B, D, F	S	P, R	ANG, DAL
RN^60@8163%&	816,000	1/8	C, N, R	H, J, K, C, E	B, D	S	P, R	ANG, DAL
RN^60@8253%&	825,000	1/8	C, N, R	H, J, K, C, E	B, D, F	S	P, R	ANG, DAL
RN^60@8353%&	835,000	1/8	C, N, R	H, J, K, C, E	B, D	S	P, R	ANG, DAL
RN^60@8453%&	845,000	1/8	C, N, R	H, J, K, C, E	B, D, F	S	P, R	ANG, DAL
RN^60@8563%&	856,000	1/8	C, N, R	H, J, K, C, E	B, D	S	P, R	ANG, DAL
RN^60@8663%&	866,000	1/8	C, N, R	H, J, K, C, E	B, D, F	S	P, R	ANG, DAL
RN^60@8763%&	876,000	1/8	C, N, R	H, J, K, C, E	B, D	S	P, R	ANG, DAL
RN^60@8873%&	887,000	1/8	C, N, R	H, J, K, C, E	B, D, F	S	P, R	ANG, DAL
RN^60@8983%&	898,000	1/8	C, N, R	H, J, K, C, E	B, D	S	P, R	ANG, DAL
RN^60@9093%&	909,000	1/8	C, N, R	H, J, K, C, E	B, D, F	S	P, R	ANG, DAL
RN^60@9203%&	920,000	1/8	C, N, R	H, J, K, C, E	B, D	S	P, R	ANG, DAL
RN^60@9313%&	931,000	1/8	C, N, R	H, J, K, C, E	B, D, F	S	P, R	ANG, DAL
RN^60@9423%&	942,000	1/8	C, N, R	H, J, K, C, E	B, D	S	P, R	ANG, DAL
RN^60@9533%&	953,000	1/8	C, N, R	H, J, K, C, E	B, D, F	S	P, R	ANG, DAL
RN^60@9653%&	965,000	1/8	C, N, R	H, J, K, C, E	B, D	S	P, R	ANG, DAL
RN^60@9763%&	976,000	1/8	C, N, R	H, J, K, C, E	B, D, F	S	P, R	ANG, DAL
RN^60@9883%&	988,000	1/8	C, N, R	H, J, K, C, E	B, D	S	P, R	ANG, DAL
RN^60@1004%&	1,000,000	1/8	C, N, R	H, J, K, C, E	B, D, F	S	P, R	ANG, DAL
RN^60@1014%&	1,010,000	1/8	C, N, R	H, J, K, C, E	B, D	S	P, R	ANG, DAL
RN^60@1024%&	1,020,000	1/8	C, N, R	H, J, K, C, E	B, D, F	S	P, R	ANG, DAL
RN^60@1044%&	1,040,000	1/8	C, N, R	H, J, K, C, E	B, D	S	P, R	ANG, DAL
RN^60@1054%&	1,050,000	1/8	C, N, R	H, J, K, C, E	B, D, F	S	P, R	ANG, DAL

RN^60@1064%&	1,060,000	1/8	C, N, R	H, J, K, C, E	B, D	S	P, R	ANG, DAL
RN^60@1074%&	1,070,000	1/8	C, N, R	H, J, K, C, E	B, D, F	S	P, R	ANG, DAL
RN^60@1094%&	1,090,000	1/8	C, N, R	H, J, K, C, E	B, D	S	P, R	ANG, DAL
RN^60@1104%&	1,100,000	1/8	C, N, R	H, J, K, C, E	B, D, F	S	P, R	ANG, DAL
RN^60@1114%&	1,110,000	1/8	C, N, R	H, J, K, C, E	B, D	S	P, R	ANG, DAL
RN^60@1134%&	1,130,000	1/8	C, N, R	H, J, K, C, E	B, D, F	S	P, R	ANG, DAL
RN^60@1144%&	1,140,000	1/8	C, N, R	H, J, K, C, E	B, D	S	P, R	ANG, DAL
RN^60@1154%&	1,150,000	1/8	C, N, R	H, J, K, C, E	B, D, F	S	P, R	ANG, DAL
RN^60@1174%&	1,170,000	1/8	C, N, R	H, J, K, C, E	B, D	S	P, R	ANG, DAL
RN^60@1184%&	1,180,000	1/8	C, N, R	H, J, K, C, E	B, D, F	S	P, R	ANG, DAL
RN^60@1204%&	1,200,000	1/8	C, N, R	H, J, K, C, E	B, D	S	P, R	ANG, DAL
RN^60@1214%&	1,210,000	1/8	C, N, R	H, J, K, C, E	B, D, F	S	P, R	ANG, DAL
RN^60@1234%&	1,230,000	1/8	C, N, R	H, J, K, C, E	B, D	S	P, R	ANG, DAL
RN^60@1244%&	1,240,000	1/8	C, N, R	H, J, K, C, E	B, D, F	S	P, R	ANG, DAL
RN^60@1264%&	1,260,000	1/8	C, N, R	H, J, K, C, E	B, D	S	P, R	ANG, DAL
RN^60@1274%&	1,270,000	1/8	C, N, R	H, J, K, C, E	B, D, F	S	P, R	ANG, DAL
RN^60@1294%&	1,290,000	1/8	C, N, R	H, J, K, C, E	B, D	S	P, R	ANG, DAL
RN^60@1304%&	1,300,000	1/8	C, N, R	H, J, K, C, E	B, D, F	S	P, R	ANG, DAL
RN^60@1324%&	1,320,000	1/8	C, N, R	H, J, K, C, E	B, D	S	P, R	ANG, DAL
RN^60@1334%&	1,330,000	1/8	C, N, R	H, J, K, C, E	B, D, F	S	P, R	ANG, DAL
RN^60@1354%&	1,350,000	1/8	C, N, R	H, J, K, C, E	B, D	S	P, R	ANG, DAL
RN^60@1374%&	1,370,000	1/8	C, N, R	H, J, K, C, E	B, D, F	S	P, R	ANG, DAL
RN^60@1384%&	1,380,000	1/8	C, N, R	H, J, K, C, E	B, D	S	P, R	ANG, DAL
RN^60@1404%&	1,400,000	1/8	C, N, R	H, J, K, C, E	B, D, F	S	P, R	ANG, DAL
RN^60@1424%&	1,420,000	1/8	C, N, R	H, J, K, C, E	B, D	S	P, R	ANG, DAL
RN^60@1434%&	1,430,000	1/8	C, N, R	H, J, K, C, E	B, D, F	S	P, R	ANG, DAL
RN^60@1454%&	1,450,000	1/8	C, N, R	H, J, K, C, E	B, D	S	P, R	ANG, DAL
RN^60@1474%&	1,470,000	1/8	C, N, R	H, J, K, C, E	B, D, F	S	P, R	ANG, DAL
RN^60@1494%&	1,490,000	1/8	C, N, R	H, J, K, C, E	B, D	S	P, R	ANG, DAL
RN^60@1504%&	1,500,000	1/8	C, N, R	H, J, K, C, E	B, D, F	S	P, R	ANG, DAL
RN^60@1524%&	1,520,000	1/8	C, N, R	H, J, K, C, E	B, D	S	P, R	ANG, DAL
RN^60@1544%&	1,540,000	1/8	C, N, R	H, J, K, C, E	B, D, F	S	P, R	ANG, DAL
RN^60@1564%&	1,560,000	1/8	C, N, R	H, J, K, C, E	B, D	S	P, R	ANG, DAL
RN^60@1584%&	1,580,000	1/8	C, N, R	H, J, K, C, E	B, D, F	S	P, R	ANG, DAL
RN^60@1604%&	1,600,000	1/8	C, N, R	H, J, K, C, E	B, D	S	P, R	ANG, DAL
RN^60@1624%&	1,620,000	1/8	C, N, R	H, J, K, C, E	B, D, F	S	P, R	ANG, DAL
RN^60@1644%&	1,640,000	1/8	C, N, R	H, J, K, C, E	B, D	S	P, R	ANG, DAL
RN^60@1654%&	1,650,000	1/8	C, N, R	H, J, K, C, E	B, D, F	S	P, R	ANG, DAL
RN^60@1674%&	1,670,000	1/8	C, N, R	H, J, K, C, E	B, D	S	P, R	ANG, DAL
RN^60@1694%&	1,690,000	1/8	C, N, R	H, J, K, C, E	B, D, F	S	P, R	ANG, DAL
RN^60@1724%&	1,720,000	1/8	C, N, R	H, J, K, C, E	B, D	S	P, R	ANG, DAL
RN^60@1744%&	1,740,000	1/8	C, N, R	H, J, K, C, E	B, D, F	S	P, R	ANG, DAL
RN^60@1764%&	1,760,000	1/8	C, N, R	H, J, K, C, E	B, D	S	P, R	ANG, DAL
RN^60@1784%&	1,780,000	1/8	C, N, R	H, J, K, C, E	B, D, F	S	P, R	ANG, DAL
RN^60@1804%&	1,800,000	1/8	C, N, R	H, J, K, C, E	B, D	S	P, R	ANG, DAL
RN^60@1824%&	1,820,000	1/8	C, N, R	H, J, K, C, E	B, D, F	S	P, R	ANG, DAL
RN^60@1844%&	1,840,000	1/8	C, N, R	H, J, K, C, E	B, D	S	P, R	ANG, DAL

RN^60@1874%&	1,870,000	1/8	C, N, R	H, J, K, C, E	B, D, F	S	P, R	ANG, DAL
RN^60@1894%&	1,890,000	1/8	C, N, R	H, J, K, C, E	B, D	S	P, R	ANG, DAL
RN^60@1914%&	1,910,000	1/8	C, N, R	H, J, K, C, E	B, D, F	S	P, R	ANG, DAL
RN^60@1934%&	1,930,000	1/8	C, N, R	H, J, K, C, E	B, D	S	P, R	ANG, DAL
RN^60@1964%&	1,960,000	1/8	C, N, R	H, J, K, C, E	B, D, F	S	P, R	ANG, DAL
RN^60@1984%&	1,980,000	1/8	C, N, R	H, J, K, C, E	B, D	S	P, R	ANG, DAL
RN^60@2004%&	2,000,000	1/8	C, N, R	H, J, K, C, E	B, D, F	S	P, R	ANG, DAL
RN^60@2034%&	2,030,000	1/8	N, R	H, J, K, C, E	B, D	S	P, R	ANG
RN^60@2054%&	2,050,000	1/8	N, R	H, J, K, C, E	B, D, F	S	P, R	ANG
RN^60@2084%&	2,080,000	1/8	N, R	H, J, K, C, E	B, D	S	P, R	ANG
RN^60@2104%&	2,100,000	1/8	N, R	H, J, K, C, E	B, D, F	S	P, R	ANG
RN^60@2134%&	2,130,000	1/8	N, R	H, J, K, C, E	B, D	S	P, R	ANG
RN^60@2154%&	2,150,000	1/8	N, R	H, J, K, C, E	B, D, F	S	P, R	ANG
RN^60@2184%&	2,180,000	1/8	N, R	H, J, K, C, E	B, D	S	P, R	ANG
RN^60@2214%&	2,210,000	1/8	N, R	H, J, K, C, E	B, D, F	S	P, R	ANG
RN^60@2234%&	2,230,000	1/8	N, R	H, J, K, C, E	B, D	S	P, R	ANG
RN^60@2264%&	2,260,000	1/8	N, R	H, J, K, C, E	B, D, F	S	P, R	ANG
RN^60@2294%&	2,290,000	1/8	N, R	H, J, K, C, E	B, D	S	P, R	ANG
RN^60@2324%&	2,320,000	1/8	N, R	H, J, K, C, E	B, D, F	S	P, R	ANG
RN^60@2344%&	2,340,000	1/8	N, R	H, J, K, C, E	B, D	S	P, R	ANG
RN^60@2374%&	2,370,000	1/8	N, R	H, J, K, C, E	B, D, F	S	P, R	ANG
RN^60@2404%&	2,400,000	1/8	N, R	H, J, K, C, E	B, D	S	P, R	ANG
RN^60@2434%&	2,430,000	1/8	N, R	H, J, K, C, E	B, D, F	S	P, R	ANG
RN^60@2464%&	2,460,000	1/8	N, R	H, J, K, C, E	B, D	S	P, R	ANG
RN^60@2494%&	2,490,000	1/8	N, R	H, J, K, C, E	B, D, F	S	P, R	ANG

RN^60 RESISTORS DECADE BREAKDOWN

Click on the link below to see the associated parts selection listing:

Resistance Range
10.0 Ohms through 98.8 Ohms
100 Ohms through 988 Ohms
1,000 Ohms through 9,880 Ohms
10,000 Ohms through 98,800 Ohms
100,000 Ohms through 988,000 Ohms
1,000,000 Ohms through 2,490,000 Ohms

RN^60 Film Resistors: 10.0 Ohms through 98.8 Ohms

	Resistance	Power	Term.	Char.	Res.	Level 1	Level 2	
Part Number	Value (Ohms)	Rating (W)	Type (^)	(@)	Tol. (%)	(FRL) (&)	(FRL) (&)	Manufacturer
RN^60@10R0%&	10.0	1/8	C, N, R	H, J, K, C, E	B, D, F	S	P, R	ANG,DAL,IRC
RN^60@10R1%&	10.1	1/8	C, N, R	H, J, K, C, E	B, D	S	P, R	ANG,DAL,IRC
RN^60@10R2%&	10.2	1/8	C, N, R	H, J, K, C, E	B, D, F	S	P, R	ANG,DAL,IRC

RN^60@10R4%&	10.4	1/8	C, N, R	H, J, K, C, E	B, D	S	P, R	ANG,DAL,IRC
RN^60@10R5%&	10.5	1/8	C, N, R	H, J, K, C, E	B, D, F	S	P, R	ANG,DAL,IRC
RN^60@10R6%&	10.6	1/8	C, N, R	H, J, K, C, E	B, D	S	P, R	ANG,DAL,IRC
RN^60@10R7%&	10.7	1/8	C, N, R	H, J, K, C, E	B, D, F	S	P, R	ANG,DAL,IRC
	Resistance	Power	Term.	Char.	Res.	Level 1	Level 2	
Part Number	Value (Ohms)	Rating (W)	Type (^)	(@)	Tol. (%)	(FRL) (&)	(FRL) (&)	Manufacturer
RN^60@10R9%&	10.9	1/8	C, N, R	H, J, K, C, E	B, D	S	P, R	ANG,DAL,IRC
RN^60@11R0%&	11.0	1/8	C, N, R	H, J, K, C, E	B, D, F	S	P, R	ANG,DAL,IRC
RN^60@11R1%&	11.1	1/8	C, N, R	H, J, K, C, E	B, D	S	P, R	ANG,DAL,IRC
RN^60@11R3%&	11.3	1/8	C, N, R	H, J, K, C, E	B, D, F	S	P, R	ANG,DAL,IRC
RN^60@11R4%&	11.4	1/8	C, N, R	H, J, K, C, E	B, D	S	P, R	ANG,DAL,IRC
RN^60@11R5%&	11.5	1/8	C, N, R	H, J, K, C, E	B, D, F	S	P, R	ANG,DAL,IRC
RN^60@11R7%&	11.7	1/8	C, N, R	H, J, K, C, E	B, D	S	P, R	ANG,DAL,IRC
	Resistance	Power	Term.	Char.	Res.	Level 1	Level 2	
Part Number	Value (Ohms)	Rating (W)	Type (^)	(@)	Tol. (%)	(FRL) (&)	(FRL) (&)	Manufacturer
RN^60@11R8%&	11.8	1/8	C, N, R	H, J, K, C, E	B, D, F	S	P, R	ANG,DAL,IRC
RN^60@12R0%&	12.0	1/8	C, N, R	H, J, K, C, E	B, D	S	P, R	ANG,DAL,IRC
RN^60@12R1%&	12.1	1/8	C, N, R	H, J, K, C, E	B, D, F	S	P, R	ANG,DAL,IRC
RN^60@12R3%&	12.3	1/8	C, N, R	H, J, K, C, E	B, D	S	P, R	ANG,DAL,IRC
RN^60@12R4%&	12.4	1/8	C, N, R	H, J, K, C, E	B, D, F	S	P, R	ANG,DAL,IRC
RN^60@12R6%&	12.6	1/8	C, N, R	H, J, K, C, E	B, D	S	P, R	ANG,DAL,IRC
RN^60@12R7%&	12.7	1/8	C, N, R	H, J, K, C, E	B, D, F	S	P, R	ANG,DAL,IRC
	Resistance	Power	Term.	Char.	Res.	Level 1	Level 2	
Part Number	Value (Ohms)	Rating (W)	Type (^)	(@)	Tol. (%)	(FRL) (&)	(FRL) (&)	Manufacturer
RN^60@12R9%&	12.9	1/8	C, N, R	H, J, K, C, E	B, D	S	P, R	ANG,DAL,IRC
RN^60@13R0%&	13.0	1/8	C, N, R	H, J, K, C, E	B, D, F	S	P, R	ANG,DAL,IRC
RN^60@13R2%&	13.2	1/8	C, N, R	H, J, K, C, E	B, D	S	P, R	ANG,DAL,IRC
RN^60@13R3%&	13.3	1/8	C, N, R	H, J, K, C, E	B, D, F	S	P, R	ANG,DAL,IRC
RN^60@13R5%&	13.5	1/8	C, N, R	H, J, K, C, E	B, D	S	P, R	ANG,DAL,IRC
RN^60@13R7%&	13.7	1/8	C, N, R	H, J, K, C, E	B, D, F	S	P, R	ANG,DAL,IRC
RN^60@13R8%&	13.8	1/8	C, N, R	H, J, K, C, E	B, D	S	P, R	ANG,DAL,IRC
	Resistance	Power	Term.	Char.	Res.	Level 1	Level 2	
Part Number	Value (Ohms)	Rating (W)	Type (^)	(@)	Tol. (%)	(FRL) (&)	(FRL) (&)	Manufacturer
RN^60@14R0%&	14.0	1/8	C, N, R	H, J, K, C, E	B, D, F	S	P, R	ANG,DAL,IRC
RN^60@14R2%&	14.2	1/8	C, N, R	H, J, K, C, E	B, D	S	P, R	ANG,DAL,IRC
RN^60@14R3%&	14.3	1/8	C, N, R	H, J, K, C, E	B, D, F	S	P, R	ANG,DAL,IRC
RN^60@14R5%&	14.5	1/8	C, N, R	H, J, K, C, E	B, D	S	P, R	ANG,DAL,IRC
RN^60@14R7%&	14.7	1/8	C, N, R	H, J, K, C, E	B, D, F	S	P, R	ANG,DAL,IRC
RN^60@14R9%&	14.9	1/8	C, N, R	H, J, K, C, E	B, D	S	P, R	ANG,DAL,IRC
RN^60@15R0%&	15.0	1/8	C, N, R	H, J, K, C, E	B, D, F	S	P, R	ANG,DAL,IRC
	Resistance	Power	Term.	Char.	Res.	Level 1	Level 2	
Part Number	Value (Ohms)	Rating (W)	Type (^)	(@)	Tol. (%)	(FRL) (&)	(FRL) (&)	Manufacturer
RN^60@15R2%&	15.2	1/8	C, N, R	H, J, K, C, E	B, D	S	P, R	ANG,DAL,IRC
RN^60@15R4%&	15.4	1/8	C, N, R	H, J, K, C, E	B, D, F	S	P, R	ANG,DAL,IRC
RN^60@15R6%&	15.6	1/8	C, N, R	H, J, K, C, E	B, D	S	P, R	ANG,DAL,IRC
RN^60@15R8%&	15.8	1/8	C, N, R	H, J, K, C, E	B, D, F	S	P, R	ANG,DAL,IRC
RN^60@16R0%&	16.0	1/8	C, N, R	H, J, K, C, E	B, D	S	P, R	ANG,DAL,IRC

RN^60@16R2%&	16.2	1/8	C, N, R	H, J, K, C, E	B, D, F	S	P, R	ANG,DAL,IRC
RN^60@16R4%&	16.4	1/8	C, N, R	H, J, K, C, E	B, D	S	P, R	ANG,DAL,IRC
	Resistance	Power	Term.	Char.	Res.	Level 1	Level 2	
Part Number	Value (Ohms)	Rating (W)	Type (^)	(@)	Tol. (%)	(FRL) (&)	(FRL) (&)	Manufacturer
RN^60@16R5%&	16.5	1/8	C, N, R	H, J, K, C, E	B, D, F	S	P, R	ANG,DAL,IRC
RN^60@16R7%&	16.7	1/8	C, N, R	H, J, K, C, E	B, D	S	P, R	ANG,DAL,IRC
RN^60@16R9%&	16.9	1/8	C, N, R	H, J, K, C, E	B, D, F	S	P, R	ANG,DAL,IRC
RN^60@17R2%&	17.2	1/8	C, N, R	H, J, K, C, E	B, D	S	P, R	ANG,DAL,IRC
RN^60@17R4%&	17.4	1/8	C, N, R	H, J, K, C, E	B, D, F	S	P, R	ANG,DAL,IRC
RN^60@17R6%&	17.6	1/8	C, N, R	H, J, K, C, E	B, D	S	P, R	ANG,DAL,IRC
RN^60@17R8%&	17.8	1/8	C, N, R	H, J, K, C, E	B, D, F	S	P, R	ANG,DAL,IRC
	Resistance	Power	Term.	Char.	Res.	Level 1	Level 2	
Part Number	Value (Ohms)	Rating (W)	Type (^)	(@)	Tol. (%)	(FRL) (&)	(FRL) (&)	Manufacturer
RN^60@18R0%&	18.0	1/8	C, N, R	H, J, K, C, E	B, D	S	P, R	ANG,DAL,IRC
RN^60@18R2%&	18.2	1/8	C, N, R	H, J, K, C, E	B, D, F	S	P, R	ANG,DAL,IRC
RN^60@18R4%&	18.4	1/8	C, N, R	H, J, K, C, E	B, D	S	P, R	ANG,DAL,IRC
RN^60@18R7%&	18.7	1/8	C, N, R	H, J, K, C, E	B, D, F	S	P, R	ANG,DAL,IRC
RN^60@18R9%&	18.9	1/8	C, N, R	H, J, K, C, E	B, D	S	P, R	ANG,DAL,IRC
RN^60@19R1%&	19.1	1/8	C, N, R	H, J, K, C, E	B, D, F	S	P, R	ANG,DAL,IRC
RN^60@19R3%&	19.3	1/8	C, N, R	H, J, K, C, E	B, D	S	P, R	ANG,DAL,IRC
	Resistance	Power	Term.	Char.	Res.	Level 1	Level 2	
Part Number	Value (Ohms)	Rating (W)	Type (^)	(@)	Tol. (%)	(FRL) (&)	(FRL) (&)	Manufacturer
RN^60@19R6%&	19.6	1/8	C, N, R	H, J, K, C, E	B, D, F	S	P, R	ANG,DAL,IRC
RN^60@19R8%&	19.8	1/8	C, N, R	H, J, K, C, E	B, D	S	P, R	ANG,DAL,IRC
RN^60@20R0%&	20.0	1/8	C, N, R	H, J, K, C, E	B, D, F	S	P, R	ANG,DAL,IRC
RN^60@20R3%&	20.3	1/8	C, N, R	H, J, K, C, E	B, D	S	P, R	ANG,DAL,IRC
RN^60@20R5%&	20.5	1/8	C, N, R	H, J, K, C, E	B, D, F	S	P, R	ANG,DAL,IRC
RN^60@20R8%&	20.8	1/8	C, N, R	H, J, K, C, E	B, D	S	P, R	ANG,DAL,IRC
RN^60@21R0%&	21.0	1/8	C, N, R	H, J, K, C, E	B, D, F	S	P, R	ANG,DAL,IRC
	Resistance	Power	Term.	Char.	Res.	Level 1	Level 2	
Part Number	Value (Ohms)	Rating (W)	Type (^)	(@)	Tol. (%)	(FRL) (&)	(FRL) (&)	Manufacturer
RN^60@21R3%&	21.3	1/8	C, N, R	H, J, K, C, E	B, D	S	P, R	ANG,DAL,IRC
RN^60@21R5%&	21.5	1/8	C, N, R	H, J, K, C, E	B, D, F	S	P, R	ANG,DAL,IRC
RN^60@21R8%&	21.8	1/8	C, N, R	H, J, K, C, E	B, D	S	P, R	ANG,DAL,IRC
RN^60@22R1%&	22.1	1/8	C, N, R	H, J, K, C, E	B, D, F	S	P, R	ANG,DAL,IRC
RN^60@22R3%&	22.3	1/8	C, N, R	H, J, K, C, E	B, D	S	P, R	ANG,DAL,IRC
RN^60@22R6%&	22.6	1/8	C, N, R	H, J, K, C, E	B, D, F	S	P, R	ANG,DAL,IRC
RN^60@22R9%&	22.9	1/8	C, N, R	H, J, K, C, E	B, D	S	P, R	ANG,DAL,IRC
	Resistance	Power	Term.	Char.	Res.	Level 1	Level 2	
Part Number	Value (Ohms)	Rating (W)	Type (^)	(@)	Tol. (%)	(FRL) (&)	(FRL) (&)	Manufacturer
RN^60@23R2%&	23.2	1/8	C, N, R	H, J, K, C, E	B, D, F	S	P, R	ANG,DAL,IRC
RN^60@23R4%&	23.4	1/8	C, N, R	H, J, K, C, E	B, D	S	P, R	ANG,DAL,IRC
RN^60@23R7%&	23.7	1/8	C, N, R	H, J, K, C, E	B, D, F	S	P, R	ANG,DAL,IRC
RN^60@24R0%&	24.0	1/8	C, N, R	H, J, K, C, E	B, D	S	P, R	ANG,DAL,IRC
RN^60@24R3%&	24.3	1/8	C, N, R	H, J, K, C, E	B, D, F	S	P, R	ANG,DAL,IRC
RN^60@24R6%&	24.6	1/8	C, N, R	H, J, K, C, E	B, D	S	P, R	ANG,DAL,IRC
RN^60@24R9%&	24.9	1/8	C, N, R	H, J, K, C, E	B, D, F	S	P, R	ANG,DAL,IRC

	Resistance	Power	Term.	Char.	Res.	Level 1	Level 2	
Part Number	Value (Ohms)	Rating (W)	Type (^)	(@)	Tol. (%)	(FRL) (&)	(FRL) (&)	Manufacturer
RN^60@25R2%&	25.2	1/8	C, N, R	H, J, K, C, E	B, D	S	P, R	ANG,DAL,IRC
RN^60@25R5%&	25.5	1/8	C, N, R	H, J, K, C, E	B, D, F	S	P, R	ANG,DAL,IRC
RN^60@25R8%&	25.8	1/8	C, N, R	H, J, K, C, E	B, D	S	P, R	ANG,DAL,IRC
RN^60@26R1%&	26.1	1/8	C, N, R	H, J, K, C, E	B, D, F	S	P, R	ANG,DAL,IRC
RN^60@26R4%&	26.4	1/8	C, N, R	H, J, K, C, E	B, D	S	P, R	ANG,DAL,IRC
RN^60@26R7%&	26.7	1/8	C, N, R	H, J, K, C, E	B, D, F	S	P, R	ANG,DAL,IRC
RN^60@27R1%&	27.1	1/8	C, N, R	H, J, K, C, E	B, D	S	P, R	ANG,DAL,IRC
	Resistance	Power	Term.	Char.	Res.	Level 1	Level 2	
Part Number	Value (Ohms)	Rating (W)	Type (^)	(@)	Tol. (%)	(FRL) (&)	(FRL) (&)	Manufacturer
RN^60@27R4%&	27.4	1/8	C, N, R	H, J, K, C, E	B, D, F	S	P, R	ANG,DAL,IRC
RN^60@27R7%&	27.7	1/8	C, N, R	H, J, K, C, E	B, D	S	P, R	ANG,DAL,IRC
RN^60@28R0%&	28.0	1/8	C, N, R	H, J, K, C, E	B, D, F	S	P, R	ANG,DAL,IRC
RN^60@28R4%&	28.4	1/8	C, N, R	H, J, K, C, E	B, D	S	P, R	ANG,DAL,IRC
RN^60@28R7%&	28.7	1/8	C, N, R	H, J, K, C, E	B, D, F	S	P, R	ANG,DAL,IRC
RN^60@29R1%&	29.1	1/8	C, N, R	H, J, K, C, E	B, D	S	P, R	ANG,DAL,IRC
RN^60@29R4%&	29.4	1/8	C, N, R	H, J, K, C, E	B, D, F	S	P, R	ANG,DAL,IRC
	Resistance	Power	Term.	Char.	Res.	Level 1	Level 2	
Part Number	Value (Ohms)	Rating (W)	Type (^)	(@)	Tol. (%)	(FRL) (&)	(FRL) (&)	Manufacturer
RN^60@29R8%&	29.8	1/8	C, N, R	H, J, K, C, E	B, D	S	P, R	ANG,DAL,IRC
RN^60@30R1%&	30.1	1/8	C, N, R	H, J, K, C, E	B, D, F	S	P, R	ANG,DAL,IRC
RN^60@30R5%&	30.5	1/8	C, N, R	H, J, K, C, E	B, D	S	P, R	ANG,DAL,IRC
RN^60@30R9%&	30.9	1/8	C, N, R	H, J, K, C, E	B, D, F	S	P, R	ANG,DAL,IRC
RN^60@31R2%&	31.2	1/8	C, N, R	H, J, K, C, E	B, D	S	P, R	ANG,DAL,IRC
RN^60@31R6%&	31.6	1/8	C, N, R	H, J, K, C, E	B, D, F	S	P, R	ANG,DAL,IRC
RN^60@32R0%&	32.0	1/8	C, N, R	H, J, K, C, E	B, D	S	P, R	ANG,DAL,IRC
	Resistance	Power	Term.	Char.	Res.	Level 1	Level 2	
Part Number	Value (Ohms)	Rating (W)	Type (^)	(@)	Tol. (%)	(FRL) (&)	(FRL) (&)	Manufacturer
RN^60@32R4%&	32.4	1/8	C, N, R	H, J, K, C, E	B, D, F	S	P, R	ANG,DAL,IRC
RN^60@32R8%&	32.8	1/8	C, N, R	H, J, K, C, E	B, D	S	P, R	ANG,DAL,IRC
RN^60@33R2%&	33.2	1/8	C, N, R	H, J, K, C, E	B, D, F	S	P, R	ANG,DAL,IRC
RN^60@33R6%&	33.6	1/8	C, N, R	H, J, K, C, E	B, D	S	P, R	ANG,DAL,IRC
RN^60@34R0%&	34.0	1/8	C, N, R	H, J, K, C, E	B, D, F	S	P, R	ANG,DAL,IRC
RN^60@34R4%&	34.4	1/8	C, N, R	H, J, K, C, E	B, D	S	P, R	ANG,DAL,IRC
RN^60@34R8%&	34.8	1/8	C, N, R	H, J, K, C, E	B, D, F	S	P, R	ANG,DAL,IRC
	Resistance	Power	Term.	Char.	Res.	Level 1	Level 2	
Part Number	Value (Ohms)	Rating (W)	Type (^)	(@)	Tol. (%)	(FRL) (&)	(FRL) (&)	Manufacturer
RN^60@35R2%&	35.2	1/8	C, N, R	H, J, K, C, E	B, D	S	P, R	ANG,DAL,IRC
RN^60@35R7%&	35.7	1/8	C, N, R	H, J, K, C, E	B, D, F	S	P, R	ANG,DAL,IRC
RN^60@36R1%&	36.1	1/8	C, N, R	H, J, K, C, E	B, D	S	P, R	ANG,DAL,IRC
RN^60@36R5%&	36.5	1/8	C, N, R	H, J, K, C, E	B, D, F	S	P, R	ANG,DAL,IRC
RN^60@37R0%&	37.0	1/8	C, N, R	H, J, K, C, E	B, D	S	P, R	ANG,DAL,IRC
RN^60@37R4%&	37.4	1/8	C, N, R	H, J, K, C, E	B, D, F	S	P, R	ANG,DAL,IRC
RN^60@37R9%&	37.9	1/8	C, N, R	H, J, K, C, E	B, D	S	P, R	ANG,DAL,IRC
	Resistance	Power	Term.	Char.	Res.	Level 1	Level 2	
Part Number	Value (Ohms)	Rating (W)	Type (^)	(@)	Tol. (%)	(FRL) (&)	(FRL) (&)	Manufacturer

RN^60@38R3%&	38.3	1/8	C, N, R	H, J, K, C, E	B, D, F	S	P, R	ANG,DAL,IRC
RN^60@38R8%&	38.8	1/8	C, N, R	H, J, K, C, E	B, D	S	P, R	ANG,DAL,IRC
RN^60@39R2%&	39.2	1/8	C, N, R	H, J, K, C, E	B, D, F	S	P, R	ANG,DAL,IRC
RN^60@39R7%&	39.7	1/8	C, N, R	H, J, K, C, E	B, D	S	P, R	ANG,DAL,IRC
RN^60@40R2%&	40.2	1/8	C, N, R	H, J, K, C, E	B, D, F	S	P, R	ANG,DAL,IRC
RN^60@40R7%&	40.7	1/8	C, N, R	H, J, K, C, E	B, D	S	P, R	ANG,DAL,IRC
RN^60@41R2%&	41.2	1/8	C, N, R	H, J, K, C, E	B, D, F	S	P, R	ANG,DAL,IRC
	Resistance	Power	Term.	Char.	Res.	Level 1	Level 2	
Part Number	Value (Ohms)	Rating (W)	Type (^)	(@)	Tol. (%)	(FRL) (&)	(FRL) (&)	Manufacturer
RN^60@41R7%&	41.7	1/8	C, N, R	H, J, K, C, E	B, D	S	P, R	ANG,DAL,IRC
RN^60@42R2%&	42.2	1/8	C, N, R	H, J, K, C, E	B, D, F	S	P, R	ANG,DAL,IRC
RN^60@42R7%&	42.7	1/8	C, N, R	H, J, K, C, E	B, D	S	P, R	ANG,DAL,IRC
RN^60@43R2%&	43.2	1/8	C, N, R	H, J, K, C, E	B, D, F	S	P, R	ANG,DAL,IRC
RN^60@43R7%&	43.7	1/8	C, N, R	H, J, K, C, E	B, D	S	P, R	ANG,DAL,IRC
RN^60@44R2%&	44.2	1/8	C, N, R	H, J, K, C, E	B, D, F	S	P, R	ANG,DAL,IRC
RN^60@44R8%&	44.8	1/8	C, N, R	H, J, K, C, E	B, D	S	P, R	ANG,DAL,IRC
	Resistance	Power	Term.	Char.	Res.	Level 1	Level 2	
Part Number	Value (Ohms)	Rating (W)	Type (^)	(@)	Tol. (%)	(FRL) (&)	(FRL) (&)	Manufacturer
RN^60@45R3%&	45.3	1/8	C, N, R	H, J, K, C, E	B, D, F	S	P, R	ANG,DAL,IRC
RN^60@45R9%&	45.9	1/8	C, N, R	H, J, K, C, E	B, D	S	P, R	ANG,DAL,IRC
RN^60@46R4%&	46.4	1/8	C, N, R	H, J, K, C, E	B, D, F	S	P, R	ANG,DAL,IRC
RN^60@47R0%&	47.0	1/8	C, N, R	H, J, K, C, E	B, D	S	P, R	ANG,DAL,IRC
RN^60@47R5%&	47.5	1/8	C, N, R	H, J, K, C, E	B, D, F	S	P, R	ANG,DAL,IRC
RN^60@48R1%&	48.1	1/8	C, N, R	H, J, K, C, E	B, D	S	P, R	ANG,DAL,IRC
RN^60@48R7%&	48.7	1/8	C, N, R	H, J, K, C, E	B, D, F	S	P, R	ANG,DAL,IRC
	Resistance	Power	Term.	Char.	Res.	Level 1	Level 2	
Part Number	Value (Ohms)	Rating (W)	Type (^)	(@)	Tol. (%)	(FRL) (&)	(FRL) (&)	Manufacturer
RN^60@49R3%&	49.3	1/8	C, N, R	H, J, K, C, E	B, D	S	P, R	ANG,DAL,IRC
RN^60@49R9%&	49.9	1/8	C, N, R	H, J, K, C, E	B, D, F	S	P, R	ANG,DAL,IRC
RN^60@50R5%&	50.5	1/8	C, N, R	H, J, K, C, E	B, D	S	P, R	ANG,DAL,IRC
RN^60@51R1%&	51.1	1/8	C, N, R	H, J, K, C, E	B, D, F	S	P, R	ANG,DAL,IRC
RN^60@51R7%&	51.7	1/8	C, N, R	H, J, K, C, E	B, D	S	P, R	ANG,DAL,IRC
RN^60@52R3%&	52.3	1/8	C, N, R	H, J, K, C, E	B, D, F	S	P, R	ANG,DAL,IRC
RN^60@53R0%&	53.0	1/8	C, N, R	H, J, K, C, E	B, D	S	P, R	ANG,DAL,IRC
	Resistance	Power	Term.	Char.	Res.	Level 1	Level 2	
Part Number	Value (Ohms)	Rating (W)	Type (^)	(@)	Tol. (%)	(FRL) (&)	(FRL) (&)	Manufacturer
RN^60@53R6%&	53.6	1/8	C, N, R	H, J, K, C, E	B, D, F	S	P, R	ANG,DAL,IRC
RN^60@54R2%&	54.2	1/8	C, N, R	H, J, K, C, E	B, D	S	P, R	ANG,DAL,IRC
RN^60@54R9%&	54.9	1/8	C, N, R	H, J, K, C, E	B, D, F	S	P, R	ANG,DAL,IRC
RN^60@55R6%&	55.6	1/8	C, N, R	H, J, K, C, E	B, D	S	P, R	ANG,DAL,IRC
RN^60@56R2%&	56.2	1/8	C, N, R	H, J, K, C, E	B, D, F	S	P, R	ANG,DAL,IRC
RN^60@56R9%&	56.9	1/8	C, N, R	H, J, K, C, E	B, D	S	P, R	ANG,DAL,IRC
RN^60@57R6%&	57.6	1/8	C, N, R	H, J, K, C, E	B, D, F	S	P, R	ANG,DAL,IRC
	Resistance	Power	Term.	Char.	Res.	Level 1	Level 2	
Part Number	Value (Ohms)	Rating (W)	Type (^)	(@)	Tol. (%)	(FRL) (&)	(FRL) (&)	Manufacturer
RN^60@58R3%&	58.3	1/8	C, N, R	H, J, K, C, E	B, D	S	P, R	ANG,DAL,IRC
RN^60@59R0%&	59.0	1/8	C, N, R	H, J, K, C, E	B, D, F	S	P, R	ANG,DAL,IRC

RN^60@59R7%&	59.7	1/8	C, N, R	H, J, K, C, E	B, D	S	P, R	ANG,DAL,IRC
RN^60@60R4%&	60.4	1/8	C, N, R	H, J, K, C, E	B, D, F	S	P, R	ANG,DAL,IRC
RN^60@61R2%&	61.2	1/8	C, N, R	H, J, K, C, E	B, D	S	P, R	ANG,DAL,IRC
RN^60@61R9%&	61.9	1/8	C, N, R	H, J, K, C, E	B, D, F	S	P, R	ANG,DAL,IRC
RN^60@62R6%&	62.6	1/8	C, N, R	H, J, K, C, E	B, D	S	P, R	ANG,DAL,IRC
	Resistance	Power	Term.	Char.	Res.	Level 1	Level 2	
Part Number	Value (Ohms)	Rating (W)	Type (^)	(@)	Tol. (%)	(FRL) (&)	(FRL) (&)	Manufacturer
RN^60@63R4%&	63.4	1/8	C, N, R	H, J, K, C, E	B, D, F	S	P, R	ANG,DAL,IRC
RN^60@64R2%&	64.2	1/8	C, N, R	H, J, K, C, E	B, D	S	P, R	ANG,DAL,IRC
RN^60@64R9%&	64.9	1/8	C, N, R	H, J, K, C, E	B, D, F	S	P, R	ANG,DAL,IRC
RN^60@65R7%&	65.7	1/8	C, N, R	H, J, K, C, E	B, D	S	P, R	ANG,DAL,IRC
RN^60@66R5%&	66.5	1/8	C, N, R	H, J, K, C, E	B, D, F	S	P, R	ANG,DAL,IRC
RN^60@67R3%&	67.3	1/8	C, N, R	H, J, K, C, E	B, D	S	P, R	ANG,DAL,IRC
RN^60@68R1%&	68.1	1/8	C, N, R	H, J, K, C, E	B, D, F	S	P, R	ANG,DAL,IRC
	Resistance	Power	Term.	Char.	Res.	Level 1	Level 2	
Part Number	Value (Ohms)	Rating (W)	Type (^)	(@)	Tol. (%)	(FRL) (&)	(FRL) (&)	Manufacturer
RN^60@69R0%&	69.0	1/8	C, N, R	H, J, K, C, E	B, D	S	P, R	ANG,DAL,IRC
RN^60@69R8%&	69.8	1/8	C, N, R	H, J, K, C, E	B, D, F	S	P, R	ANG,DAL,IRC
RN^60@70R6%&	70.6	1/8	C, N, R	H, J, K, C, E	B, D	S	P, R	ANG,DAL,IRC
RN^60@71R5%&	71.5	1/8	C, N, R	H, J, K, C, E	B, D, F	S	P, R	ANG,DAL,IRC
RN^60@72R3%&	72.3	1/8	C, N, R	H, J, K, C, E	B, D	S	P, R	ANG,DAL,IRC
RN^60@73R2%&	73.2	1/8	C, N, R	H, J, K, C, E	B, D, F	S	P, R	ANG,DAL,IRC
RN^60@74R1%&	74.1	1/8	C, N, R	H, J, K, C, E	B, D	S	P, R	ANG,DAL,IRC
	Resistance	Power	Term.	Char.	Res.	Level 1	Level 2	
Part Number	Value (Ohms)	Rating (W)	Type (^)	(@)	Tol. (%)	(FRL) (&)	(FRL) (&)	Manufacturer
RN^60@75R0%&	75.0	1/8	C, N, R	H, J, K, C, E	B, D, F	S	P, R	ANG,DAL,IRC
RN^60@75R9%&	75.9	1/8	C, N, R	H, J, K, C, E	B, D	S	P, R	ANG,DAL,IRC
RN^60@76R8%&	76.8	1/8	C, N, R	H, J, K, C, E	B, D, F	S	P, R	ANG,DAL,IRC
RN^60@77R7%&	77.7	1/8	C, N, R	H, J, K, C, E	B, D	S	P, R	ANG,DAL,IRC
RN^60@78R7%&	78.7	1/8	C, N, R	H, J, K, C, E	B, D, F	S	P, R	ANG,DAL,IRC
RN^60@79R6%&	79.6	1/8	C, N, R	H, J, K, C, E	B, D	S	P, R	ANG,DAL,IRC
RN^60@80R6%&	80.6	1/8	C, N, R	H, J, K, C, E	B, D, F	S	P, R	ANG,DAL,IRC
	Resistance	Power	Term.	Char.	Res.	Level 1	Level 2	
Part Number	Value (Ohms)	Rating (W)	Type (^)	(@)	Tol. (%)	(FRL) (&)	(FRL) (&)	Manufacturer
RN^60@81R6%&	81.6	1/8	C, N, R	H, J, K, C, E	B, D	S	P, R	ANG,DAL,IRC
RN^60@82R5%&	82.5	1/8	C, N, R	H, J, K, C, E	B, D, F	S	P, R	ANG,DAL,IRC
RN^60@83R5%&	83.5	1/8	C, N, R	H, J, K, C, E	B, D	S	P, R	ANG,DAL,IRC
RN^60@84R5%&	84.5	1/8	C, N, R	H, J, K, C, E	B, D, F	S	P, R	ANG,DAL,IRC
RN^60@85R6%&	85.6	1/8	C, N, R	H, J, K, C, E	B, D	S	P, R	ANG,DAL,IRC
RN^60@86R6%&	86.6	1/8	C, N, R	H, J, K, C, E	B, D, F	S	P, R	ANG,DAL,IRC
RN^60@87R6%&	87.6	1/8	C, N, R	H, J, K, C, E	B, D	S	P, R	ANG,DAL,IRC
	Resistance	Power	Term.	Char.	Res.	Level 1	Level 2	
Part Number	Value (Ohms)	Rating (W)	Type (^)	(@)	Tol. (%)	(FRL) (&)	(FRL) (&)	Manufacturer
RN^60@88R7%&	88.7	1/8	C, N, R	H, J, K, C, E	B, D, F	S	P, R	ANG,DAL,IRC
RN^60@89R8%&	89.8	1/8	C, N, R	H, J, K, C, E	B, D	S	P, R	ANG,DAL,IRC
RN^60@90R9%&	90.9	1/8	C, N, R	H, J, K, C, E	B, D, F	S	P, R	ANG,DAL,IRC
RN^60@92R0%&	92.0	1/8	C, N, R	H, J, K, C, E	B, D	S	P, R	ANG,DAL,IRC

RN^60@93R1%&	93.1	1/8	C, N, R	H, J, K, C, E	B, D, F	S	P, R	ANG,DAL,IRC
RN^60@94R2%&	94.2	1/8	C, N, R	H, J, K, C, E	B, D	S	P, R	ANG,DAL,IRC
RN^60@95R3%&	95.3	1/8	C, N, R	H, J, K, C, E	B, D, F	S	P, R	ANG,DAL,IRC
	Resistance	Power	Term.	Char.	Res.	Level 1	Level 2	
Part Number	Value (Ohms)	Rating (W)	Type (^)	(@)	Tol. (%)	(FRL) (&)	(FRL) (&)	Manufacturer
RN^60@96R5%&	96.5	1/8	C, N, R	H, J, K, C, E	B, D	S	P, R	ANG,DAL,IRC
RN^60@97R6%&	97.6	1/8	C, N, R	H, J, K, C, E	B, D, F	S	P, R	ANG,DAL,IRC
RN^60@98R8%&	98.8	1/8	C, N, R	H, J, K, C, E	B, D	S	P, R	ANG,DAL,IRC

RN^60 Film Resistors: 100 Ohms through 988 Ohms

	Resistance	Power	Term.	Char.	Res.	Level 1	Level 2	
Part Number	Value (Ohms)	Rating (W)	Type (^)	(@)	Tol. (%)	(FRL) (&)	(FRL) (&)	Manufacturer
RN^60@1000%&	100	1/8	C, N, R	H, J, K, C, E	B, D, F	S	P, R	ANG,DAL,IRC
RN^60@1010%&	101	1/8	C, N, R	H, J, K, C, E	B, D	S	P, R	ANG,DAL,IRC
RN^60@1020%&	102	1/8	C, N, R	H, J, K, C, E	B, D, F	S	P, R	ANG,DAL,IRC
RN^60@1040%&	104	1/8	C, N, R	H, J, K, C, E	B, D	S	P, R	ANG,DAL,IRC
RN^60@1050%&	105	1/8	C, N, R	H, J, K, C, E	B, D, F	S	P, R	ANG,DAL,IRC
RN^60@1060%&	106	1/8	C, N, R	H, J, K, C, E	B, D	S	P, R	ANG,DAL,IRC
RN^60@1070%&	107	1/8	C, N, R	H, J, K, C, E	B, D, F	S	P, R	ANG,DAL,IRC
	Resistance	Power	Term.	Char.	Res.	Level 1	Level 2	
Part Number	Value (Ohms)	Rating (W)	Type (^)	(@)	Tol. (%)	(FRL) (&)	(FRL) (&)	Manufacturer
RN^60@1090%&	109	1/8	C, N, R	H, J, K, C, E	B, D	S	P, R	ANG,DAL,IRC
RN^60@1100%&	110	1/8	C, N, R	H, J, K, C, E	B, D, F	S	P, R	ANG,DAL,IRC
RN^60@1110%&	111	1/8	C, N, R	H, J, K, C, E	B, D	S	P, R	ANG,DAL,IRC
RN^60@1130%&	113	1/8	C, N, R	H, J, K, C, E	B, D, F	S	P, R	ANG,DAL,IRC
RN^60@1140%&	114	1/8	C, N, R	H, J, K, C, E	B, D	S	P, R	ANG,DAL,IRC
RN^60@1150%&	115	1/8	C, N, R	H, J, K, C, E	B, D, F	S	P, R	ANG,DAL,IRC
RN^60@1170%&	117	1/8	C, N, R	H, J, K, C, E	B, D	S	P, R	ANG,DAL,IRC
	Resistance	Power	Term.	Char.	Res.	Level 1	Level 2	
Part Number	Value (Ohms)	Rating (W)	Type (^)	(@)	Tol. (%)	(FRL) (&)	(FRL) (&)	Manufacturer
RN^60@1180%&	118	1/8	C, N, R	H, J, K, C, E	B, D, F	S	P, R	ANG,DAL,IRC
RN^60@1200%&	120	1/8	C, N, R	H, J, K, C, E	B, D	S	P, R	ANG,DAL,IRC
RN^60@1210%&	121	1/8	C, N, R	H, J, K, C, E	B, D, F	S	P, R	ANG,DAL,IRC
RN^60@1230%&	123	1/8	C, N, R	H, J, K, C, E	B, D	S	P, R	ANG,DAL,IRC
RN^60@1240%&	124	1/8	C, N, R	H, J, K, C, E	B, D, F	S	P, R	ANG,DAL,IRC
RN^60@1260%&	126	1/8	C, N, R	H, J, K, C, E	B, D	S	P, R	ANG,DAL,IRC
RN^60@1270%&	127	1/8	C, N, R	H, J, K, C, E	B, D, F	S	P, R	ANG,DAL,IRC
	Resistance	Power	Term.	Char.	Res.	Level 1	Level 2	
Part Number	Value (Ohms)	Rating (W)	Type (^)	(@)	Tol. (%)	(FRL) (&)	(FRL) (&)	Manufacturer
RN^60@1290%&	129	1/8	C, N, R	H, J, K, C, E	B, D	S	P, R	ANG,DAL,IRC
RN^60@1300%&	130	1/8	C, N, R	H, J, K, C, E	B, D, F	S	P, R	ANG,DAL,IRC
RN^60@1320%&	132	1/8	C, N, R	H, J, K, C, E	B, D	S	P, R	ANG,DAL,IRC
RN^60@1330%&	133	1/8	C, N, R	H, J, K, C, E	B, D, F	S	P, R	ANG,DAL,IRC
RN^60@1350%&	135	1/8	C, N, R	H, J, K, C, E	B, D	S	P, R	ANG,DAL,IRC

RN^60@1370%&	137	1/8	C, N, R	H, J, K, C, E	B, D, F	S	P, R	ANG,DAL,IRC
RN^60@1380%&	138	1/8	C, N, R	H, J, K, C, E	B, D	S	P, R	ANG,DAL,IRC
	Resistance	Power	Term.	Char.	Res.	Level 1	Level 2	
Part Number	Value (Ohms)	Rating (W)	Type (^)	(@)	Tol. (%)	(FRL) (&)	(FRL) (&)	Manufacturer
RN^60@1400%&	140	1/8	C, N, R	H, J, K, C, E	B, D, F	S	P, R	ANG,DAL,IRC
RN^60@1420%&	142	1/8	C, N, R	H, J, K, C, E	B, D	S	P, R	ANG,DAL,IRC
RN^60@1430%&	143	1/8	C, N, R	H, J, K, C, E	B, D, F	S	P, R	ANG,DAL,IRC
RN^60@1450%&	145	1/8	C, N, R	H, J, K, C, E	B, D	S	P, R	ANG,DAL,IRC
RN^60@1470%&	147	1/8	C, N, R	H, J, K, C, E	B, D, F	S	P, R	ANG,DAL,IRC
RN^60@1490%&	149	1/8	C, N, R	H, J, K, C, E	B, D	S	P, R	ANG,DAL,IRC
RN^60@1500%&	150	1/8	C, N, R	H, J, K, C, E	B, D, F	S	P, R	ANG,DAL,IRC
	Resistance	Power	Term.	Char.	Res.	Level 1	Level 2	
Part Number	Value (Ohms)	Rating (W)	Type (^)	(@)	Tol. (%)	(FRL) (&)	(FRL) (&)	Manufacturer
RN^60@1520%&	152	1/8	C, N, R	H, J, K, C, E	B, D	S	P, R	ANG,DAL,IRC
RN^60@1540%&	154	1/8	C, N, R	H, J, K, C, E	B, D, F	S	P, R	ANG,DAL,IRC
RN^60@1560%&	156	1/8	C, N, R	H, J, K, C, E	B, D	S	P, R	ANG,DAL,IRC
RN^60@1580%&	158	1/8	C, N, R	H, J, K, C, E	B, D, F	S	P, R	ANG,DAL,IRC
RN^60@1600%&	160	1/8	C, N, R	H, J, K, C, E	B, D	S	P, R	ANG,DAL,IRC
RN^60@1620%&	162	1/8	C, N, R	H, J, K, C, E	B, D, F	S	P, R	ANG,DAL,IRC
RN^60@1640%&	164	1/8	C, N, R	H, J, K, C, E	B, D	S	P, R	ANG,DAL,IRC
	Resistance	Power	Term.	Char.	Res.	Level 1	Level 2	
Part Number	Value (Ohms)	Rating (W)	Type (^)	(@)	Tol. (%)	(FRL) (&)	(FRL) (&)	Manufacturer
RN^60@1650%&	165	1/8	C, N, R	H, J, K, C, E	B, D, F	S	P, R	ANG,DAL,IRC
RN^60@1670%&	167	1/8	C, N, R	H, J, K, C, E	B, D	S	P, R	ANG,DAL,IRC
RN^60@1690%&	169	1/8	C, N, R	H, J, K, C, E	B, D, F	S	P, R	ANG,DAL,IRC
RN^60@1720%&	172	1/8	C, N, R	H, J, K, C, E	B, D	S	P, R	ANG,DAL,IRC
RN^60@1740%&	174	1/8	C, N, R	H, J, K, C, E	B, D, F	S	P, R	ANG,DAL,IRC
RN^60@1760%&	176	1/8	C, N, R	H, J, K, C, E	B, D	S	P, R	ANG,DAL,IRC
RN^60@1780%&	178	1/8	C, N, R	H, J, K, C, E	B, D, F	S	P, R	ANG,DAL,IRC
	Resistance	Power	Term.	Char.	Res.	Level 1	Level 2	
Part Number	Value (Ohms)	Rating (W)	Type (^)	(@)	Tol. (%)	(FRL) (&)	(FRL) (&)	Manufacturer
RN^60@1800%&	180	1/8	C, N, R	H, J, K, C, E	B, D	S	P, R	ANG,DAL,IRC
RN^60@1820%&	182	1/8	C, N, R	H, J, K, C, E	B, D, F	S	P, R	ANG,DAL,IRC
RN^60@1840%&	184	1/8	C, N, R	H, J, K, C, E	B, D	S	P, R	ANG,DAL,IRC
RN^60@1870%&	187	1/8	C, N, R	H, J, K, C, E	B, D, F	S	P, R	ANG,DAL,IRC
RN^60@1890%&	189	1/8	C, N, R	H, J, K, C, E	B, D	S	P, R	ANG,DAL,IRC
RN^60@1910%&	191	1/8	C, N, R	H, J, K, C, E	B, D, F	S	P, R	ANG,DAL,IRC
RN^60@1930%&	193	1/8	C, N, R	H, J, K, C, E	B, D	S	P, R	ANG,DAL,IRC
	Resistance	Power	Term.	Char.	Res.	Level 1	Level 2	
Part Number	Value (Ohms)	Rating (W)	Type (^)	(@)	Tol. (%)	(FRL) (&)	(FRL) (&)	Manufacturer
RN^60@1960%&	196	1/8	C, N, R	H, J, K, C, E	B, D, F	S	P, R	ANG,DAL,IRC
RN^60@1980%&	198	1/8	C, N, R	H, J, K, C, E	B, D	S	P, R	ANG,DAL,IRC
RN^60@2000%&	200	1/8	C, N, R	H, J, K, C, E	B, D, F	S	P, R	ANG,DAL,IRC
RN^60@2030%&	203	1/8	C, N, R	H, J, K, C, E	B, D	S	P, R	ANG,DAL,IRC
RN^60@2050%&	205	1/8	C, N, R	H, J, K, C, E	B, D, F	S	P, R	ANG,DAL,IRC
RN^60@2080%&	208	1/8	C, N, R	H, J, K, C, E	B, D	S	P, R	ANG,DAL,IRC
RN^60@2100%&	210	1/8	C, N, R	H, J, K, C, E	B, D, F	S	P, R	ANG,DAL,IRC

	Resistance	Power	Term.	Char.	Res.	Level 1	Level 2	
Part Number	Value (Ohms)	Rating (W)	Type (^)	(@)	Tol. (%)	(FRL) (&)	(FRL) (&)	Manufacturer
RN^60@2130%&	213	1/8	C, N, R	H, J, K, C, E	B, D	S	P, R	ANG,DAL,IRC
RN^60@2150%&	215	1/8	C, N, R	H, J, K, C, E	B, D, F	S	P, R	ANG,DAL,IRC
RN^60@2180%&	218	1/8	C, N, R	H, J, K, C, E	B, D	S	P, R	ANG,DAL,IRC
RN^60@2210%&	221	1/8	C, N, R	H, J, K, C, E	B, D, F	S	P, R	ANG,DAL,IRC
RN^60@2230%&	223	1/8	C, N, R	H, J, K, C, E	B, D	S	P, R	ANG,DAL,IRC
RN^60@2260%&	226	1/8	C, N, R	H, J, K, C, E	B, D, F	S	P, R	ANG,DAL,IRC
RN^60@2290%&	229	1/8	C, N, R	H, J, K, C, E	B, D	S	P, R	ANG,DAL,IRC
	Resistance	Power	Term.	Char.	Res.	Level 1	Level 2	
Part Number	Value (Ohms)	Rating (W)	Type (^)	(@)	Tol. (%)	(FRL) (&)	(FRL) (&)	Manufacturer
RN^60@2320%&	232	1/8	C, N, R	H, J, K, C, E	B, D, F	S	P, R	ANG,DAL,IRC
RN^60@2340%&	234	1/8	C, N, R	H, J, K, C, E	B, D	S	P, R	ANG,DAL,IRC
RN^60@2370%&	237	1/8	C, N, R	H, J, K, C, E	B, D, F	S	P, R	ANG,DAL,IRC
RN^60@2400%&	240	1/8	C, N, R	H, J, K, C, E	B, D	S	P, R	ANG,DAL,IRC
RN^60@2430%&	243	1/8	C, N, R	H, J, K, C, E	B, D, F	S	P, R	ANG,DAL,IRC
RN^60@2460%&	246	1/8	C, N, R	H, J, K, C, E	B, D	S	P, R	ANG,DAL,IRC
RN^60@2490%&	249	1/8	C, N, R	H, J, K, C, E	B, D, F	S	P, R	ANG,DAL,IRC
	Resistance	Power	Term.	Char.	Res.	Level 1	Level 2	
Part Number	Value (Ohms)	Rating (W)	Type (^)	(@)	Tol. (%)	(FRL) (&)	(FRL) (&)	Manufacturer
RN^60@2520%&	252	1/8	C, N, R	H, J, K, C, E	B, D	S	P, R	ANG,DAL,IRC
RN^60@2550%&	255	1/8	C, N, R	H, J, K, C, E	B, D, F	S	P, R	ANG,DAL,IRC
RN^60@2580%&	258	1/8	C, N, R	H, J, K, C, E	B, D	S	P, R	ANG,DAL,IRC
RN^60@2610%&	261	1/8	C, N, R	H, J, K, C, E	B, D, F	S	P, R	ANG,DAL,IRC
RN^60@2640%&	264	1/8	C, N, R	H, J, K, C, E	B, D	S	P, R	ANG,DAL,IRC
RN^60@2670%&	267	1/8	C, N, R	H, J, K, C, E	B, D, F	S	P, R	ANG,DAL,IRC
RN^60@2710%&	271	1/8	C, N, R	H, J, K, C, E	B, D	S	P, R	ANG,DAL,IRC
	Resistance	Power	Term.	Char.	Res.	Level 1	Level 2	
Part Number	Value (Ohms)	Rating (W)	Type (^)	(@)	Tol. (%)	(FRL) (&)	(FRL) (&)	Manufacturer
RN^60@2740%&	274	1/8	C, N, R	H, J, K, C, E	B, D, F	S	P, R	ANG,DAL,IRC
RN^60@2770%&	277	1/8	C, N, R	H, J, K, C, E	B, D	S	P, R	ANG,DAL,IRC
RN^60@2800%&	280	1/8	C, N, R	H, J, K, C, E	B, D, F	S	P, R	ANG,DAL,IRC
RN^60@2840%&	284	1/8	C, N, R	H, J, K, C, E	B, D	S	P, R	ANG,DAL,IRC
RN^60@2870%&	287	1/8	C, N, R	H, J, K, C, E	B, D, F	S	P, R	ANG,DAL,IRC
RN^60@2910%&	291	1/8	C, N, R	H, J, K, C, E	B, D	S	P, R	ANG,DAL,IRC
RN^60@2940%&	294	1/8	C, N, R	H, J, K, C, E	B, D, F	S	P, R	ANG,DAL,IRC
	Resistance	Power	Term.	Char.	Res.	Level 1	Level 2	
Part Number	Value (Ohms)	Rating (W)	Type (^)	(@)	Tol. (%)	(FRL) (&)	(FRL) (&)	Manufacturer
RN^60@2980%&	298	1/8	C, N, R	H, J, K, C, E	B, D	S	P, R	ANG,DAL,IRC
RN^60@3010%&	301	1/8	C, N, R	H, J, K, C, E	B, D, F	S	P, R	ANG,DAL,IRC
RN^60@3050%&	305	1/8	C, N, R	H, J, K, C, E	B, D	S	P, R	ANG,DAL,IRC
RN^60@3090%&	309	1/8	C, N, R	H, J, K, C, E	B, D, F	S	P, R	ANG,DAL,IRC
RN^60@3120%&	312	1/8	C, N, R	H, J, K, C, E	B, D	S	P, R	ANG,DAL,IRC
RN^60@3160%&	316	1/8	C, N, R	H, J, K, C, E	B, D, F	S	P, R	ANG,DAL,IRC
RN^60@3200%&	320	1/8	C, N, R	H, J, K, C, E	B, D	S	P, R	ANG,DAL,IRC
	Resistance	Power	Term.	Char.	Res.	Level 1	Level 2	
Part Number	Value (Ohms)	Rating (W)	Type (^)	(@)	Tol. (%)	(FRL) (&)	(FRL) (&)	Manufacturer

RN^60@3240%&	324	1/8	C, N, R	H, J, K, C, E	B, D, F	S	P, R	ANG,DAL,IRC
RN^60@3280%&	328	1/8	C, N, R	H, J, K, C, E	B, D	S	P, R	ANG,DAL,IRC
RN^60@3320%&	332	1/8	C, N, R	H, J, K, C, E	B, D, F	S	P, R	ANG,DAL,IRC
RN^60@3360%&	336	1/8	C, N, R	H, J, K, C, E	B, D	S	P, R	ANG,DAL,IRC
RN^60@3400%&	340	1/8	C, N, R	H, J, K, C, E	B, D, F	S	P, R	ANG,DAL,IRC
RN^60@3440%&	344	1/8	C, N, R	H, J, K, C, E	B, D	S	P, R	ANG,DAL,IRC
RN^60@3480%&	348	1/8	C, N, R	H, J, K, C, E	B, D, F	S	P, R	ANG,DAL,IRC
	Resistance	Power	Term.	Char.	Res.	Level 1	Level 2	
Part Number	Value (Ohms)	Rating (W)	Type (^)	(@)	Tol. (%)	(FRL) (&)	(FRL) (&)	Manufacturer
RN^60@3520%&	352	1/8	C, N, R	H, J, K, C, E	B, D	S	P, R	ANG,DAL,IRC
RN^60@3570%&	357	1/8	C, N, R	H, J, K, C, E	B, D, F	S	P, R	ANG,DAL,IRC
RN^60@3610%&	361	1/8	C, N, R	H, J, K, C, E	B, D	S	P, R	ANG,DAL,IRC
RN^60@3650%&	365	1/8	C, N, R	H, J, K, C, E	B, D, F	S	P, R	ANG,DAL,IRC
RN^60@3700%&	370	1/8	C, N, R	H, J, K, C, E	B, D	S	P, R	ANG,DAL,IRC
RN^60@3740%&	374	1/8	C, N, R	H, J, K, C, E	B, D, F	S	P, R	ANG,DAL,IRC
RN^60@3790%&	379	1/8	C, N, R	H, J, K, C, E	B, D	S	P, R	ANG,DAL,IRC
	Resistance	Power	Term.	Char.	Res.	Level 1	Level 2	
Part Number	Value (Ohms)	Rating (W)	Type (^)	(@)	Tol. (%)	(FRL) (&)	(FRL) (&)	Manufacturer
RN^60@3830%&	383	1/8	C, N, R	H, J, K, C, E	B, D, F	S	P, R	ANG,DAL,IRC
RN^60@3880%&	388	1/8	C, N, R	H, J, K, C, E	B, D	S	P, R	ANG,DAL,IRC
RN^60@3920%&	392	1/8	C, N, R	H, J, K, C, E	B, D, F	S	P, R	ANG,DAL,IRC
RN^60@3970%&	397	1/8	C, N, R	H, J, K, C, E	B, D	S	P, R	ANG,DAL,IRC
RN^60@4020%&	402	1/8	C, N, R	H, J, K, C, E	B, D, F	S	P, R	ANG,DAL,IRC
RN^60@4070%&	407	1/8	C, N, R	H, J, K, C, E	B, D	S	P, R	ANG,DAL,IRC
RN^60@4120%&	412	1/8	C, N, R	H, J, K, C, E	B, D, F	S	P, R	ANG,DAL,IRC
	Resistance	Power	Term.	Char.	Res.	Level 1	Level 2	
Part Number	Value (Ohms)	Rating (W)	Type (^)	(@)	Tol. (%)	(FRL) (&)	(FRL) (&)	Manufacturer
RN^60@4170%&	417	1/8	C, N, R	H, J, K, C, E	B, D	S	P, R	ANG,DAL,IRC
RN^60@4220%&	422	1/8	C, N, R	H, J, K, C, E	B, D, F	S	P, R	ANG,DAL,IRC
RN^60@4270%&	427	1/8	C, N, R	H, J, K, C, E	B, D	S	P, R	ANG,DAL,IRC
RN^60@4320%&	432	1/8	C, N, R	H, J, K, C, E	B, D, F	S	P, R	ANG,DAL,IRC
RN^60@4370%&	437	1/8	C, N, R	H, J, K, C, E	B, D	S	P, R	ANG,DAL,IRC
RN^60@4420%&	442	1/8	C, N, R	H, J, K, C, E	B, D, F	S	P, R	ANG,DAL,IRC
RN^60@4480%&	448	1/8	C, N, R	H, J, K, C, E	B, D	S	P, R	ANG,DAL,IRC
	Resistance	Power	Term.	Char.	Res.	Level 1	Level 2	
Part Number	Value (Ohms)	Rating (W)	Type (^)	(@)	Tol. (%)	(FRL) (&)	(FRL) (&)	Manufacturer
RN^60@4530%&	453	1/8	C, N, R	H, J, K, C, E	B, D, F	S	P, R	ANG,DAL,IRC
RN^60@4590%&	459	1/8	C, N, R	H, J, K, C, E	B, D	S	P, R	ANG,DAL,IRC
RN^60@4640%&	464	1/8	C, N, R	H, J, K, C, E	B, D, F	S	P, R	ANG,DAL,IRC
RN^60@4700%&	470	1/8	C, N, R	H, J, K, C, E	B, D	S	P, R	ANG,DAL,IRC
RN^60@4750%&	475	1/8	C, N, R	H, J, K, C, E	B, D, F	S	P, R	ANG,DAL,IRC
RN^60@4810%&	481	1/8	C, N, R	H, J, K, C, E	B, D	S	P, R	ANG,DAL,IRC
RN^60@4870%&	487	1/8	C, N, R	H, J, K, C, E	B, D, F	S	P, R	ANG,DAL,IRC
	Resistance	Power	Term.	Char.	Res.	Level 1	Level 2	
Part Number	Value (Ohms)	Rating (W)	Type (^)	(@)	Tol. (%)	(FRL) (&)	(FRL) (&)	Manufacturer
RN^60@4930%&	493	1/8	C, N, R	H, J, K, C, E	B, D	S	P, R	ANG,DAL,IRC
RN^60@4990%&	499	1/8	C, N, R	H, J, K, C, E	B, D, F	S	P, R	ANG,DAL,IRC

RN^60@5050%&	505	1/8	C, N, R	H, J, K, C, E	B, D	S	P, R	ANG,DAL,IRC
RN^60@5110%&	511	1/8	C, N, R	H, J, K, C, E	B, D, F	S	P, R	ANG,DAL,IRC
RN^60@5170%&	517	1/8	C, N, R	H, J, K, C, E	B, D	S	P, R	ANG,DAL,IRC
RN^60@5230%&	523	1/8	C, N, R	H, J, K, C, E	B, D, F	S	P, R	ANG,DAL,IRC
RN^60@5300%&	530	1/8	C, N, R	H, J, K, C, E	B, D	S	P, R	ANG,DAL,IRC
	Resistance	Power	Term.	Char.	Res.	Level 1	Level 2	
Part Number	Value (Ohms)	Rating (W)	Type (^)	(@)	Tol. (%)	(FRL) (&)	(FRL) (&)	Manufacturer
RN^60@5360%&	536	1/8	C, N, R	H, J, K, C, E	B, D, F	S	P, R	ANG,DAL,IRC
RN^60@5420%&	542	1/8	C, N, R	H, J, K, C, E	B, D	S	P, R	ANG,DAL,IRC
RN^60@5490%&	549	1/8	C, N, R	H, J, K, C, E	B, D, F	S	P, R	ANG,DAL,IRC
RN^60@5560%&	556	1/8	C, N, R	H, J, K, C, E	B, D	S	P, R	ANG,DAL,IRC
RN^60@5620%&	562	1/8	C, N, R	H, J, K, C, E	B, D, F	S	P, R	ANG,DAL,IRC
RN^60@5690%&	569	1/8	C, N, R	H, J, K, C, E	B, D	S	P, R	ANG,DAL,IRC
RN^60@5760%&	576	1/8	C, N, R	H, J, K, C, E	B, D, F	S	P, R	ANG,DAL,IRC
	Resistance	Power	Term.	Char.	Res.	Level 1	Level 2	
Part Number	Value (Ohms)	Rating (W)	Type (^)	(@)	Tol. (%)	(FRL) (&)	(FRL) (&)	Manufacturer
RN^60@5830%&	583	1/8	C, N, R	H, J, K, C, E	B, D	S	P, R	ANG,DAL,IRC
RN^60@5900%&	590	1/8	C, N, R	H, J, K, C, E	B, D, F	S	P, R	ANG,DAL,IRC
RN^60@5970%&	597	1/8	C, N, R	H, J, K, C, E	B, D	S	P, R	ANG,DAL,IRC
RN^60@6040%&	604	1/8	C, N, R	H, J, K, C, E	B, D, F	S	P, R	ANG,DAL,IRC
RN^60@6120%&	612	1/8	C, N, R	H, J, K, C, E	B, D	S	P, R	ANG,DAL,IRC
RN^60@6190%&	619	1/8	C, N, R	H, J, K, C, E	B, D, F	S	P, R	ANG,DAL,IRC
RN^60@6260%&	626	1/8	C, N, R	H, J, K, C, E	B, D	S	P, R	ANG,DAL,IRC
	Resistance	Power	Term.	Char.	Res.	Level 1	Level 2	
Part Number	Value (Ohms)	Rating (W)	Type (^)	(@)	Tol. (%)	(FRL) (&)	(FRL) (&)	Manufacturer
RN^60@6340%&	634	1/8	C, N, R	H, J, K, C, E	B, D, F	S	P, R	ANG,DAL,IRC
RN^60@6420%&	642	1/8	C, N, R	H, J, K, C, E	B, D	S	P, R	ANG,DAL,IRC
RN^60@6490%&	649	1/8	C, N, R	H, J, K, C, E	B, D, F	S	P, R	ANG,DAL,IRC
RN^60@6570%&	657	1/8	C, N, R	H, J, K, C, E	B, D	S	P, R	ANG,DAL,IRC
RN^60@6650%&	665	1/8	C, N, R	H, J, K, C, E	B, D, F	S	P, R	ANG,DAL,IRC
RN^60@6730%&	673	1/8	C, N, R	H, J, K, C, E	B, D	S	P, R	ANG,DAL,IRC
RN^60@6810%&	681	1/8	C, N, R	H, J, K, C, E	B, D, F	S	P, R	ANG,DAL,IRC
	Resistance	Power	Term.	Char.	Res.	Level 1	Level 2	
Part Number	Value (Ohms)	Rating (W)	Type (^)	(@)	Tol. (%)	(FRL) (&)	(FRL) (&)	Manufacturer
RN^60@6900%&	690	1/8	C, N, R	H, J, K, C, E	B, D	S	P, R	ANG,DAL,IRC
RN^60@6980%&	698	1/8	C, N, R	H, J, K, C, E	B, D, F	S	P, R	ANG,DAL,IRC
RN^60@7060%&	706	1/8	C, N, R	H, J, K, C, E	B, D	S	P, R	ANG,DAL,IRC
RN^60@7150%&	715	1/8	C, N, R	H, J, K, C, E	B, D, F	S	P, R	ANG,DAL,IRC
RN^60@7230%&	723	1/8	C, N, R	H, J, K, C, E	B, D	S	P, R	ANG,DAL,IRC
RN^60@7320%&	732	1/8	C, N, R	H, J, K, C, E	B, D, F	S	P, R	ANG,DAL,IRC
RN^60@7410%&	741	1/8	C, N, R	H, J, K, C, E	B, D	S	P, R	ANG,DAL,IRC
	Resistance	Power	Term.	Char.	Res.	Level 1	Level 2	
Part Number	Value (Ohms)	Rating (W)	Type (^)	(@)	Tol. (%)	(FRL) (&)	(FRL) (&)	Manufacturer
RN^60@7500%&	750	1/8	C, N, R	H, J, K, C, E	B, D, F	S	P, R	ANG,DAL,IRC
RN^60@7590%&	759	1/8	C, N, R	H, J, K, C, E	B, D	S	P, R	ANG,DAL,IRC
RN^60@7680%&	768	1/8	C, N, R	H, J, K, C, E	B, D, F	S	P, R	ANG,DAL,IRC
RN^60@7770%&	777	1/8	C, N, R	H, J, K, C, E	B, D	S	P, R	ANG,DAL,IRC

RN^60@7870%&	787	1/8	C, N, R	H, J, K, C, E	B, D, F	S	P, R	ANG,DAL,IRC
RN^60@7960%&	796	1/8	C, N, R	H, J, K, C, E	B, D	S	P, R	ANG,DAL,IRC
RN^60@8060%&	806	1/8	C, N, R	H, J, K, C, E	B, D, F	S	P, R	ANG,DAL,IRC
	Resistance	Power	Term.	Char.	Res.	Level 1	Level 2	
Part Number	Value (Ohms)	Rating (W)	Type (^)	(@)	Tol. (%)	(FRL) (&)	(FRL) (&)	Manufacturer
RN^60@8160%&	816	1/8	C, N, R	H, J, K, C, E	B, D	S	P, R	ANG,DAL,IRC
RN^60@8250%&	825	1/8	C, N, R	H, J, K, C, E	B, D, F	S	P, R	ANG,DAL,IRC
RN^60@8350%&	835	1/8	C, N, R	H, J, K, C, E	B, D	S	P, R	ANG,DAL,IRC
RN^60@8450%&	845	1/8	C, N, R	H, J, K, C, E	B, D, F	S	P, R	ANG,DAL,IRC
RN^60@8560%&	856	1/8	C, N, R	H, J, K, C, E	B, D	S	P, R	ANG,DAL,IRC
RN^60@8660%&	866	1/8	C, N, R	H, J, K, C, E	B, D, F	S	P, R	ANG,DAL,IRC
RN^60@8760%&	876	1/8	C, N, R	H, J, K, C, E	B, D	S	P, R	ANG,DAL,IRC
	Resistance	Power	Term.	Char.	Res.	Level 1	Level 2	
Part Number	Value (Ohms)	Rating (W)	Type (^)	(@)	Tol. (%)	(FRL) (&)	(FRL) (&)	Manufacturer
RN^60@8870%&	887	1/8	C, N, R	H, J, K, C, E	B, D, F	S	P, R	ANG,DAL,IRC
RN^60@8980%&	898	1/8	C, N, R	H, J, K, C, E	B, D	S	P, R	ANG,DAL,IRC
RN^60@9090%&	909	1/8	C, N, R	H, J, K, C, E	B, D, F	S	P, R	ANG,DAL,IRC
RN^60@9200%&	920	1/8	C, N, R	H, J, K, C, E	B, D	S	P, R	ANG,DAL,IRC
RN^60@9310%&	931	1/8	C, N, R	H, J, K, C, E	B, D, F	S	P, R	ANG,DAL,IRC
RN^60@9420%&	942	1/8	C, N, R	H, J, K, C, E	B, D	S	P, R	ANG,DAL,IRC
RN^60@9530%&	953	1/8	C, N, R	H, J, K, C, E	B, D, F	S	P, R	ANG,DAL,IRC
	Resistance	Power	Term.	Char.	Res.	Level 1	Level 2	
Part Number	Value (Ohms)	Rating (W)	Type (^)	(@)	Tol. (%)	(FRL) (&)	(FRL) (&)	Manufacturer
RN^60@9650%&	965	1/8	C, N, R	H, J, K, C, E	B, D	S	P, R	ANG,DAL,IRC
RN^60@9760%&	976	1/8	C, N, R	H, J, K, C, E	B, D, F	S	P, R	ANG,DAL,IRC
RN^60@9880%&	988	1/8	C, N, R	H, J, K, C, E	B, D	S	P, R	ANG,DAL,IRC

RN^60 Film Resistors: 1,000 Ohms through 9,880 Ohms

	Resistance	Power	Term.	Char.	Res.	Level 1	Level 2	
Part Number	Value (Ohms)	Rating (W)	Type (^)	(@)	Tol. (%)	(FRL) (&)	(FRL) (&)	Manufacturer
RN^60@1001%&	1,000	1/8	C, N, R	H, J, K, C, E	B, D, F	S	P, R	ANG,DAL,IRC
RN^60@1011%&	1,010	1/8	C, N, R	H, J, K, C, E	B, D	S	P, R	ANG,DAL,IRC
RN^60@1021%&	1,020	1/8	C, N, R	H, J, K, C, E	B, D, F	S	P, R	ANG,DAL,IRC
RN^60@1041%&	1,040	1/8	C, N, R	H, J, K, C, E	B, D	S	P, R	ANG,DAL,IRC
RN^60@1051%&	1,050	1/8	C, N, R	H, J, K, C, E	B, D, F	S	P, R	ANG,DAL,IRC
RN^60@1061%&	1,060	1/8	C, N, R	H, J, K, C, E	B, D	S	P, R	ANG,DAL,IRC
RN^60@1071%&	1,070	1/8	C, N, R	H, J, K, C, E	B, D, F	S	P, R	ANG,DAL,IRC
	Resistance	Power	Term.	Char.	Res.	Level 1	Level 2	
Part Number	Value (Ohms)	Rating (W)	Type (^)	(@)	Tol. (%)	(FRL) (&)	(FRL) (&)	Manufacturer
RN^60@1091%&	1,090	1/8	C, N, R	H, J, K, C, E	B, D	S	P, R	ANG,DAL,IRC
RN^60@1101%&	1,100	1/8	C, N, R	H, J, K, C, E	B, D, F	S	P, R	ANG,DAL,IRC
RN^60@1111%&	1,110	1/8	C, N, R	H, J, K, C, E	B, D	S	P, R	ANG,DAL,IRC
RN^60@1131%&	1,130	1/8	C, N, R	H, J, K, C, E	B, D, F	S	P, R	ANG,DAL,IRC
RN^60@1141%&	1,140	1/8	C, N, R	H, J, K, C, E	B, D	S	P, R	ANG,DAL,IRC

RN^60@1151%&	1,150	1/8	C, N, R	H, J, K, C, E	B, D, F	S	P, R	ANG,DAL,IRC
RN^60@1171%&	1,170	1/8	C, N, R	H, J, K, C, E	B, D	S	P, R	ANG,DAL,IRC
	Resistance	Power	Term.	Char.	Res.	Level 1	Level 2	
Part Number	Value (Ohms)	Rating (W)	Type (^)	(@)	Tol. (%)	(FRL) (&)	(FRL) (&)	Manufacturer
RN^60@1181%&	1,180	1/8	C, N, R	H, J, K, C, E	B, D, F	S	P, R	ANG,DAL,IRC
RN^60@1201%&	1,200	1/8	C, N, R	H, J, K, C, E	B, D	S	P, R	ANG,DAL,IRC
RN^60@1211%&	1,210	1/8	C, N, R	H, J, K, C, E	B, D, F	S	P, R	ANG,DAL,IRC
RN^60@1231%&	1,230	1/8	C, N, R	H, J, K, C, E	B, D	S	P, R	ANG,DAL,IRC
RN^60@1241%&	1,240	1/8	C, N, R	H, J, K, C, E	B, D, F	S	P, R	ANG,DAL,IRC
RN^60@1261%&	1,260	1/8	C, N, R	H, J, K, C, E	B, D	S	P, R	ANG,DAL,IRC
RN^60@1271%&	1,270	1/8	C, N, R	H, J, K, C, E	B, D, F	S	P, R	ANG,DAL,IRC
	Resistance	Power	Term.	Char.	Res.	Level 1	Level 2	
Part Number	Value (Ohms)	Rating (W)	Type (^)	(@)	Tol. (%)	(FRL) (&)	(FRL) (&)	Manufacturer
RN^60@1291%&	1,290	1/8	C, N, R	H, J, K, C, E	B, D	S	P, R	ANG,DAL,IRC
RN^60@1301%&	1,300	1/8	C, N, R	H, J, K, C, E	B, D, F	S	P, R	ANG,DAL,IRC
RN^60@1321%&	1,320	1/8	C, N, R	H, J, K, C, E	B, D	S	P, R	ANG,DAL,IRC
RN^60@1331%&	1,330	1/8	C, N, R	H, J, K, C, E	B, D, F	S	P, R	ANG,DAL,IRC
RN^60@1351%&	1,350	1/8	C, N, R	H, J, K, C, E	B, D	S	P, R	ANG,DAL,IRC
RN^60@1371%&	1,370	1/8	C, N, R	H, J, K, C, E	B, D, F	S	P, R	ANG,DAL,IRC
RN^60@1381%&	1,380	1/8	C, N, R	H, J, K, C, E	B, D	S	P, R	ANG,DAL,IRC
	Resistance	Power	Term.	Char.	Res.	Level 1	Level 2	
Part Number	Value (Ohms)	Rating (W)	Type (^)	(@)	Tol. (%)	(FRL) (&)	(FRL) (&)	Manufacturer
RN^60@1401%&	1,400	1/8	C, N, R	H, J, K, C, E	B, D, F	S	P, R	ANG,DAL,IRC
RN^60@1421%&	1,420	1/8	C, N, R	H, J, K, C, E	B, D	S	P, R	ANG,DAL,IRC
RN^60@1431%&	1,430	1/8	C, N, R	H, J, K, C, E	B, D, F	S	P, R	ANG,DAL,IRC
RN^60@1451%&	1,450	1/8	C, N, R	H, J, K, C, E	B, D	S	P, R	ANG,DAL,IRC
RN^60@1471%&	1,470	1/8	C, N, R	H, J, K, C, E	B, D, F	S	P, R	ANG,DAL,IRC
RN^60@1491%&	1,490	1/8	C, N, R	H, J, K, C, E	B, D	S	P, R	ANG,DAL,IRC
RN^60@1501%&	1,500	1/8	C, N, R	H, J, K, C, E	B, D, F	S	P, R	ANG,DAL,IRC
	Resistance	Power	Term.	Char.	Res.	Level 1	Level 2	
Part Number	Value (Ohms)	Rating (W)	Type (^)	(@)	Tol. (%)	(FRL) (&)	(FRL) (&)	Manufacturer
RN^60@1521%&	1,520	1/8	C, N, R	H, J, K, C, E	B, D	S	P, R	ANG,DAL,IRC
RN^60@1541%&	1,540	1/8	C, N, R	H, J, K, C, E	B, D, F	S	P, R	ANG,DAL,IRC
RN^60@1561%&	1,560	1/8	C, N, R	H, J, K, C, E	B, D	S	P, R	ANG,DAL,IRC
RN^60@1581%&	1,580	1/8	C, N, R	H, J, K, C, E	B, D, F	S	P, R	ANG,DAL,IRC
RN^60@1601%&	1,600	1/8	C, N, R	H, J, K, C, E	B, D	S	P, R	ANG,DAL,IRC
RN^60@1621%&	1,620	1/8	C, N, R	H, J, K, C, E	B, D, F	S	P, R	ANG,DAL,IRC
RN^60@1641%&	1,640	1/8	C, N, R	H, J, K, C, E	B, D	S	P, R	ANG,DAL,IRC
	Resistance	Power	Term.	Char.	Res.	Level 1	Level 2	
Part Number	Value (Ohms)	Rating (W)	Type (^)	(@)	Tol. (%)	(FRL) (&)	(FRL) (&)	Manufacturer
RN^60@1651%&	1,650	1/8	C, N, R	H, J, K, C, E	B, D, F	S	P, R	ANG,DAL,IRC
RN^60@1671%&	1,670	1/8	C, N, R	H, J, K, C, E	B, D	S	P, R	ANG,DAL,IRC
RN^60@1691%&	1,690	1/8	C, N, R	H, J, K, C, E	B, D, F	S	P, R	ANG,DAL,IRC
RN^60@1721%&	1,720	1/8	C, N, R	H, J, K, C, E	B, D	S	P, R	ANG,DAL,IRC
RN^60@1741%&	1,740	1/8	C, N, R	H, J, K, C, E	B, D, F	S	P, R	ANG,DAL,IRC
RN^60@1761%&	1,760	1/8	C, N, R	H, J, K, C, E	B, D	S	P, R	ANG,DAL,IRC
RN^60@1781%&	1,780	1/8	C, N, R	H, J, K, C, E	B, D, F	S	P, R	ANG,DAL,IRC

	Resistance	Power	Term.	Char.	Res.	Level 1	Level 2	
Part Number	Value (Ohms)	Rating (W)	Type (^)	(@)	Tol. (%)	(FRL) (&)	(FRL) (&)	Manufacturer
RN^60@1801%&	1,800	1/8	C, N, R	H, J, K, C, E	B, D	S	P, R	ANG,DAL,IRC
RN^60@1821%&	1,820	1/8	C, N, R	H, J, K, C, E	B, D, F	S	P, R	ANG,DAL,IRC
RN^60@1841%&	1,840	1/8	C, N, R	H, J, K, C, E	B, D	S	P, R	ANG,DAL,IRC
RN^60@1871%&	1,870	1/8	C, N, R	H, J, K, C, E	B, D, F	S	P, R	ANG,DAL,IRC
RN^60@1891%&	1,890	1/8	C, N, R	H, J, K, C, E	B, D	S	P, R	ANG,DAL,IRC
RN^60@1911%&	1,910	1/8	C, N, R	H, J, K, C, E	B, D, F	S	P, R	ANG,DAL,IRC
RN^60@1931%&	1,930	1/8	C, N, R	H, J, K, C, E	B, D	S	P, R	ANG,DAL,IRC
	Resistance	Power	Term.	Char.	Res.	Level 1	Level 2	
Part Number	Value (Ohms)	Rating (W)	Type (^)	(@)	Tol. (%)	(FRL) (&)	(FRL) (&)	Manufacturer
RN^60@1961%&	1,960	1/8	C, N, R	H, J, K, C, E	B, D, F	S	P, R	ANG,DAL,IRC
RN^60@1981%&	1,980	1/8	C, N, R	H, J, K, C, E	B, D	S	P, R	ANG,DAL,IRC
RN^60@2001%&	2,000	1/8	C, N, R	H, J, K, C, E	B, D, F	S	P, R	ANG,DAL,IRC
RN^60@2031%&	2,030	1/8	C, N, R	H, J, K, C, E	B, D	S	P, R	ANG,DAL,IRC
RN^60@2051%&	2,050	1/8	C, N, R	H, J, K, C, E	B, D, F	S	P, R	ANG,DAL,IRC
RN^60@2081%&	2,080	1/8	C, N, R	H, J, K, C, E	B, D	S	P, R	ANG,DAL,IRC
RN^60@2101%&	2,100	1/8	C, N, R	H, J, K, C, E	B, D, F	S	P, R	ANG,DAL,IRC
	Resistance	Power	Term.	Char.	Res.	Level 1	Level 2	
Part Number	Value (Ohms)	Rating (W)	Type (^)	(@)	Tol. (%)	(FRL) (&)	(FRL) (&)	Manufacturer
RN^60@2131%&	2,130	1/8	C, N, R	H, J, K, C, E	B, D	S	P, R	ANG,DAL,IRC
RN^60@2151%&	2,150	1/8	C, N, R	H, J, K, C, E	B, D, F	S	P, R	ANG,DAL,IRC
RN^60@2181%&	2,180	1/8	C, N, R	H, J, K, C, E	B, D	S	P, R	ANG,DAL,IRC
RN^60@2211%&	2,210	1/8	C, N, R	H, J, K, C, E	B, D, F	S	P, R	ANG,DAL,IRC
RN^60@2231%&	2,230	1/8	C, N, R	H, J, K, C, E	B, D	S	P, R	ANG,DAL,IRC
RN^60@2261%&	2,260	1/8	C, N, R	H, J, K, C, E	B, D, F	S	P, R	ANG,DAL,IRC
RN^60@2291%&	2,290	1/8	C, N, R	H, J, K, C, E	B, D	S	P, R	ANG,DAL,IRC
	Resistance	Power	Term.	Char.	Res.	Level 1	Level 2	
Part Number	Value (Ohms)	Rating (W)	Type (^)	(@)	Tol. (%)	(FRL) (&)	(FRL) (&)	Manufacturer
RN^60@2321%&	2,320	1/8	C, N, R	H, J, K, C, E	B, D, F	S	P, R	ANG,DAL,IRC
RN^60@2341%&	2,340	1/8	C, N, R	H, J, K, C, E	B, D	S	P, R	ANG,DAL,IRC
RN^60@2371%&	2,370	1/8	C, N, R	H, J, K, C, E	B, D, F	S	P, R	ANG,DAL,IRC
RN^60@2401%&	2,400	1/8	C, N, R	H, J, K, C, E	B, D	S	P, R	ANG,DAL,IRC
RN^60@2431%&	2,430	1/8	C, N, R	H, J, K, C, E	B, D, F	S	P, R	ANG,DAL,IRC
RN^60@2461%&	2,460	1/8	C, N, R	H, J, K, C, E	B, D	S	P, R	ANG,DAL,IRC
RN^60@2491%&	2,490	1/8	C, N, R	H, J, K, C, E	B, D, F	S	P, R	ANG,DAL,IRC
	Resistance	Power	Term.	Char.	Res.	Level 1	Level 2	
Part Number	Value (Ohms)	Rating (W)	Type (^)	(@)	Tol. (%)	(FRL) (&)	(FRL) (&)	Manufacturer
RN^60@2521%&	2,520	1/8	C, N, R	H, J, K, C, E	B, D	S	P, R	ANG,DAL,IRC
RN^60@2551%&	2,550	1/8	C, N, R	H, J, K, C, E	B, D, F	S	P, R	ANG,DAL,IRC
RN^60@2581%&	2,580	1/8	C, N, R	H, J, K, C, E	B, D	S	P, R	ANG,DAL,IRC
RN^60@2611%&	2,610	1/8	C, N, R	H, J, K, C, E	B, D, F	S	P, R	ANG,DAL,IRC
RN^60@2641%&	2,640	1/8	C, N, R	H, J, K, C, E	B, D	S	P, R	ANG,DAL,IRC
RN^60@2671%&	2,670	1/8	C, N, R	H, J, K, C, E	B, D, F	S	P, R	ANG,DAL,IRC
RN^60@2711%&	2,710	1/8	C, N, R	H, J, K, C, E	B, D	S	P, R	ANG,DAL,IRC
	Resistance	Power	Term.	Char.	Res.	Level 1	Level 2	
Part Number	Value (Ohms)	Rating (W)	Type (^)	(@)	Tol. (%)	(FRL) (&)	(FRL) (&)	Manufacturer

RN^60@2741%&	2,740	1/8	C, N, R	H, J, K, C, E	B, D, F	S	P, R	ANG,DAL,IRC
RN^60@2771%&	2,770	1/8	C, N, R	H, J, K, C, E	B, D	S	P, R	ANG,DAL,IRC
RN^60@2801%&	2,800	1/8	C, N, R	H, J, K, C, E	B, D, F	S	P, R	ANG,DAL,IRC
RN^60@2841%&	2,840	1/8	C, N, R	H, J, K, C, E	B, D	S	P, R	ANG,DAL,IRC
RN^60@2871%&	2,870	1/8	C, N, R	H, J, K, C, E	B, D, F	S	P, R	ANG,DAL,IRC
RN^60@2911%&	2,910	1/8	C, N, R	H, J, K, C, E	B, D	S	P, R	ANG,DAL,IRC
RN^60@2941%&	2,940	1/8	C, N, R	H, J, K, C, E	B, D, F	S	P, R	ANG,DAL,IRC
	Resistance	Power	Term.	Char.	Res.	Level 1	Level 2	
Part Number	Value (Ohms)	Rating (W)	Type (^)	(@)	Tol. (%)	(FRL) (&)	(FRL) (&)	Manufacturer
RN^60@2981%&	2,980	1/8	C, N, R	H, J, K, C, E	B, D	S	P, R	ANG,DAL,IRC
RN^60@3011%&	3,010	1/8	C, N, R	H, J, K, C, E	B, D, F	S	P, R	ANG,DAL,IRC
RN^60@3051%&	3,050	1/8	C, N, R	H, J, K, C, E	B, D	S	P, R	ANG,DAL,IRC
RN^60@3091%&	3,090	1/8	C, N, R	H, J, K, C, E	B, D, F	S	P, R	ANG,DAL,IRC
RN^60@3121%&	3,120	1/8	C, N, R	H, J, K, C, E	B, D	S	P, R	ANG,DAL,IRC
RN^60@3161%&	3,160	1/8	C, N, R	H, J, K, C, E	B, D, F	S	P, R	ANG,DAL,IRC
RN^60@3201%&	3,200	1/8	C, N, R	H, J, K, C, E	B, D	S	P, R	ANG,DAL,IRC
	Resistance	Power	Term.	Char.	Res.	Level 1	Level 2	
Part Number	Value (Ohms)	Rating (W)	Type (^)	(@)	Tol. (%)	(FRL) (&)	(FRL) (&)	Manufacturer
RN^60@3241%&	3,240	1/8	C, N, R	H, J, K, C, E	B, D, F	S	P, R	ANG,DAL,IRC
RN^60@3281%&	3,280	1/8	C, N, R	H, J, K, C, E	B, D	S	P, R	ANG,DAL,IRC
RN^60@3321%&	3,320	1/8	C, N, R	H, J, K, C, E	B, D, F	S	P, R	ANG,DAL,IRC
RN^60@3361%&	3,360	1/8	C, N, R	H, J, K, C, E	B, D	S	P, R	ANG,DAL,IRC
RN^60@3401%&	3,400	1/8	C, N, R	H, J, K, C, E	B, D, F	S	P, R	ANG,DAL,IRC
RN^60@3441%&	3,440	1/8	C, N, R	H, J, K, C, E	B, D	S	P, R	ANG,DAL,IRC
RN^60@3481%&	3,480	1/8	C, N, R	H, J, K, C, E	B, D, F	S	P, R	ANG,DAL,IRC
	Resistance	Power	Term.	Char.	Res.	Level 1	Level 2	
Part Number	Value (Ohms)	Rating (W)	Type (^)	(@)	Tol. (%)	(FRL) (&)	(FRL) (&)	Manufacturer
RN^60@3521%&	3,520	1/8	C, N, R	H, J, K, C, E	B, D	S	P, R	ANG,DAL,IRC
RN^60@3571%&	3,570	1/8	C, N, R	H, J, K, C, E	B, D, F	S	P, R	ANG,DAL,IRC
RN^60@3611%&	3,610	1/8	C, N, R	H, J, K, C, E	B, D	S	P, R	ANG,DAL,IRC
RN^60@3651%&	3,650	1/8	C, N, R	H, J, K, C, E	B, D, F	S	P, R	ANG,DAL,IRC
RN^60@3701%&	3,700	1/8	C, N, R	H, J, K, C, E	B, D	S	P, R	ANG,DAL,IRC
RN^60@3741%&	3,740	1/8	C, N, R	H, J, K, C, E	B, D, F	S	P, R	ANG,DAL,IRC
RN^60@3791%&	3,790	1/8	C, N, R	H, J, K, C, E	B, D	S	P, R	ANG,DAL,IRC
	Resistance	Power	Term.	Char.	Res.	Level 1	Level 2	
Part Number	Value (Ohms)	Rating (W)	Type (^)	(@)	Tol. (%)	(FRL) (&)	(FRL) (&)	Manufacturer
RN^60@3831%&	3,830	1/8	C, N, R	H, J, K, C, E	B, D, F	S	P, R	ANG,DAL,IRC
RN^60@3881%&	3,880	1/8	C, N, R	H, J, K, C, E	B, D	S	P, R	ANG,DAL,IRC
RN^60@3921%&	3,920	1/8	C, N, R	H, J, K, C, E	B, D, F	S	P, R	ANG,DAL,IRC
RN^60@3971%&	3,970	1/8	C, N, R	H, J, K, C, E	B, D	S	P, R	ANG,DAL,IRC
RN^60@4021%&	4,020	1/8	C, N, R	H, J, K, C, E	B, D, F	S	P, R	ANG,DAL,IRC
RN^60@4071%&	4,070	1/8	C, N, R	H, J, K, C, E	B, D	S	P, R	ANG,DAL,IRC
RN^60@4121%&	4,120	1/8	C, N, R	H, J, K, C, E	B, D, F	S	P, R	ANG,DAL,IRC
	Resistance	Power	Term.	Char.	Res.	Level 1	Level 2	
Part Number	Value (Ohms)	Rating (W)	Type (^)	(@)	Tol. (%)	(FRL) (&)	(FRL) (&)	Manufacturer
RN^60@4171%&	4,170	1/8	C, N, R	H, J, K, C, E	B, D	S	P, R	ANG,DAL,IRC
RN^60@4221%&	4,220	1/8	C, N, R	H, J, K, C, E	B, D, F	S	P, R	ANG,DAL,IRC

RN^60@4271%&	4,270	1/8	C, N, R	H, J, K, C, E	B, D	S	P, R	ANG,DAL,IRC
RN^60@4321%&	4,320	1/8	C, N, R	H, J, K, C, E	B, D, F	S	P, R	ANG,DAL,IRC
RN^60@4371%&	4,370	1/8	C, N, R	H, J, K, C, E	B, D	S	P, R	ANG,DAL,IRC
RN^60@4421%&	4,420	1/8	C, N, R	H, J, K, C, E	B, D, F	S	P, R	ANG,DAL,IRC
RN^60@4481%&	4,480	1/8	C, N, R	H, J, K, C, E	B, D	S	P, R	ANG,DAL,IRC
	Resistance	Power	Term.	Char.	Res.	Level 1	Level 2	
Part Number	Value (Ohms)	Rating (W)	Type (^)	(@)	Tol. (%)	(FRL) (&)	(FRL) (&)	Manufacturer
RN^60@4531%&	4,530	1/8	C, N, R	H, J, K, C, E	B, D, F	S	P, R	ANG,DAL,IRC
RN^60@4591%&	4,590	1/8	C, N, R	H, J, K, C, E	B, D	S	P, R	ANG,DAL,IRC
RN^60@4641%&	4,640	1/8	C, N, R	H, J, K, C, E	B, D, F	S	P, R	ANG,DAL,IRC
RN^60@4701%&	4,700	1/8	C, N, R	H, J, K, C, E	B, D	S	P, R	ANG,DAL,IRC
RN^60@4751%&	4,750	1/8	C, N, R	H, J, K, C, E	B, D, F	S	P, R	ANG,DAL,IRC
RN^60@4811%&	4,810	1/8	C, N, R	H, J, K, C, E	B, D	S	P, R	ANG,DAL,IRC
RN^60@4871%&	4,870	1/8	C, N, R	H, J, K, C, E	B, D, F	S	P, R	ANG,DAL,IRC
	Resistance	Power	Term.	Char.	Res.	Level 1	Level 2	
Part Number	Value (Ohms)	Rating (W)	Type (^)	(@)	Tol. (%)	(FRL) (&)	(FRL) (&)	Manufacturer
RN^60@4931%&	4,930	1/8	C, N, R	H, J, K, C, E	B, D	S	P, R	ANG,DAL,IRC
RN^60@4991%&	4,990	1/8	C, N, R	H, J, K, C, E	B, D, F	S	P, R	ANG,DAL,IRC
RN^60@5051%&	5,050	1/8	C, N, R	H, J, K, C, E	B, D	S	P, R	ANG,DAL,IRC
RN^60@5111%&	5,110	1/8	C, N, R	H, J, K, C, E	B, D, F	S	P, R	ANG,DAL,IRC
RN^60@5171%&	5,170	1/8	C, N, R	H, J, K, C, E	B, D	S	P, R	ANG,DAL,IRC
RN^60@5231%&	5,230	1/8	C, N, R	H, J, K, C, E	B, D, F	S	P, R	ANG,DAL,IRC
RN^60@5301%&	5,300	1/8	C, N, R	H, J, K, C, E	B, D	S	P, R	ANG,DAL,IRC
	Resistance	Power	Term.	Char.	Res.	Level 1	Level 2	
Part Number	Value (Ohms)	Rating (W)	Type (^)	(@)	Tol. (%)	(FRL) (&)	(FRL) (&)	Manufacturer
RN^60@5361%&	5,360	1/8	C, N, R	H, J, K, C, E	B, D, F	S	P, R	ANG,DAL,IRC
RN^60@5421%&	5,420	1/8	C, N, R	H, J, K, C, E	B, D	S	P, R	ANG,DAL,IRC
RN^60@5491%&	5,490	1/8	C, N, R	H, J, K, C, E	B, D, F	S	P, R	ANG,DAL,IRC
RN^60@5561%&	5,560	1/8	C, N, R	H, J, K, C, E	B, D	S	P, R	ANG,DAL,IRC
RN^60@5621%&	5,620	1/8	C, N, R	H, J, K, C, E	B, D, F	S	P, R	ANG,DAL,IRC
RN^60@5691%&	5,690	1/8	C, N, R	H, J, K, C, E	B, D	S	P, R	ANG,DAL,IRC
RN^60@5761%&	5,760	1/8	C, N, R	H, J, K, C, E	B, D, F	S	P, R	ANG,DAL,IRC
	Resistance	Power	Term.	Char.	Res.	Level 1	Level 2	
Part Number	Value (Ohms)	Rating (W)	Type (^)	(@)	Tol. (%)	(FRL) (&)	(FRL) (&)	Manufacturer
RN^60@5831%&	5,830	1/8	C, N, R	H, J, K, C, E	B, D	S	P, R	ANG,DAL,IRC
RN^60@5901%&	5,900	1/8	C, N, R	H, J, K, C, E	B, D, F	S	P, R	ANG,DAL,IRC
RN^60@5971%&	5,970	1/8	C, N, R	H, J, K, C, E	B, D	S	P, R	ANG,DAL,IRC
RN^60@6041%&	6,040	1/8	C, N, R	H, J, K, C, E	B, D, F	S	P, R	ANG,DAL,IRC
RN^60@6121%&	6,120	1/8	C, N, R	H, J, K, C, E	B, D	S	P, R	ANG,DAL,IRC
RN^60@6191%&	6,190	1/8	C, N, R	H, J, K, C, E	B, D, F	S	P, R	ANG,DAL,IRC
RN^60@6261%&	6,260	1/8	C, N, R	H, J, K, C, E	B, D	S	P, R	ANG,DAL,IRC
	Resistance	Power	Term.	Char.	Res.	Level 1	Level 2	
Part Number	Value (Ohms)	Rating (W)	Type (^)	(@)	Tol. (%)	(FRL) (&)	(FRL) (&)	Manufacturer
RN^60@6341%&	6,340	1/8	C, N, R	H, J, K, C, E	B, D, F	S	P, R	ANG,DAL,IRC
RN^60@6421%&	6,420	1/8	C, N, R	H, J, K, C, E	B, D	S	P, R	ANG,DAL,IRC
RN^60@6491%&	6,490	1/8	C, N, R	H, J, K, C, E	B, D, F	S	P, R	ANG,DAL,IRC
RN^60@6571%&	6,570	1/8	C, N, R	H, J, K, C, E	B, D	S	P, R	ANG,DAL,IRC

RN^60@6651%&	6,650	1/8	C, N, R	H, J, K, C, E	B, D, F	S	P, R	ANG,DAL,IRC
RN^60@6731%&	6,730	1/8	C, N, R	H, J, K, C, E	B, D	S	P, R	ANG,DAL,IRC
RN^60@6811%&	6,810	1/8	C, N, R	H, J, K, C, E	B, D, F	S	P, R	ANG,DAL,IRC
	Resistance	Power	Term.	Char.	Res.	Level 1	Level 2	
Part Number	Value (Ohms)	Rating (W)	Type (^)	(@)	Tol. (%)	(FRL) (&)	(FRL) (&)	Manufacturer
RN^60@6901%&	6,900	1/8	C, N, R	H, J, K, C, E	B, D	S	P, R	ANG,DAL,IRC
RN^60@6981%&	6,980	1/8	C, N, R	H, J, K, C, E	B, D, F	S	P, R	ANG,DAL,IRC
RN^60@7061%&	7,060	1/8	C, N, R	H, J, K, C, E	B, D	S	P, R	ANG,DAL,IRC
RN^60@7151%&	7,150	1/8	C, N, R	H, J, K, C, E	B, D, F	S	P, R	ANG,DAL,IRC
RN^60@7231%&	7,230	1/8	C, N, R	H, J, K, C, E	B, D	S	P, R	ANG,DAL,IRC
RN^60@7321%&	7,320	1/8	C, N, R	H, J, K, C, E	B, D, F	S	P, R	ANG,DAL,IRC
RN^60@7411%&	7,410	1/8	C, N, R	H, J, K, C, E	B, D	S	P, R	ANG,DAL,IRC
	Resistance	Power	Term.	Char.	Res.	Level 1	Level 2	
Part Number	Value (Ohms)	Rating (W)	Type (^)	(@)	Tol. (%)	(FRL) (&)	(FRL) (&)	Manufacturer
RN^60@7501%&	7,500	1/8	C, N, R	H, J, K, C, E	B, D, F	S	P, R	ANG,DAL,IRC
RN^60@7591%&	7,590	1/8	C, N, R	H, J, K, C, E	B, D	S	P, R	ANG,DAL,IRC
RN^60@7681%&	7,680	1/8	C, N, R	H, J, K, C, E	B, D, F	S	P, R	ANG,DAL,IRC
RN^60@7771%&	7,770	1/8	C, N, R	H, J, K, C, E	B, D	S	P, R	ANG,DAL,IRC
RN^60@7871%&	7,870	1/8	C, N, R	H, J, K, C, E	B, D, F	S	P, R	ANG,DAL,IRC
RN^60@7961%&	7,960	1/8	C, N, R	H, J, K, C, E	B, D	S	P, R	ANG,DAL,IRC
RN^60@8061%&	8,060	1/8	C, N, R	H, J, K, C, E	B, D, F	S	P, R	ANG,DAL,IRC
	Resistance	Power	Term.	Char.	Res.	Level 1	Level 2	
Part Number	Value (Ohms)	Rating (W)	Type (^)	(@)	Tol. (%)	(FRL) (&)	(FRL) (&)	Manufacturer
RN^60@8161%&	8,160	1/8	C, N, R	H, J, K, C, E	B, D	S	P, R	ANG,DAL,IRC
RN^60@8251%&	8,250	1/8	C, N, R	H, J, K, C, E	B, D, F	S	P, R	ANG,DAL,IRC
RN^60@8351%&	8,350	1/8	C, N, R	H, J, K, C, E	B, D	S	P, R	ANG,DAL,IRC
RN^60@8451%&	8,450	1/8	C, N, R	H, J, K, C, E	B, D, F	S	P, R	ANG,DAL,IRC
RN^60@8561%&	8,560	1/8	C, N, R	H, J, K, C, E	B, D	S	P, R	ANG,DAL,IRC
RN^60@8661%&	8,660	1/8	C, N, R	H, J, K, C, E	B, D, F	S	P, R	ANG,DAL,IRC
RN^60@8761%&	8,760	1/8	C, N, R	H, J, K, C, E	B, D	S	P, R	ANG,DAL,IRC
	Resistance	Power	Term.	Char.	Res.	Level 1	Level 2	
Part Number	Value (Ohms)	Rating (W)	Type (^)	(@)	Tol. (%)	(FRL) (&)	(FRL) (&)	Manufacturer
RN^60@8871%&	8,870	1/8	C, N, R	H, J, K, C, E	B, D, F	S	P, R	ANG,DAL,IRC
RN^60@8981%&	8,980	1/8	C, N, R	H, J, K, C, E	B, D	S	P, R	ANG,DAL,IRC
RN^60@9091%&	9,090	1/8	C, N, R	H, J, K, C, E	B, D, F	S	P, R	ANG,DAL,IRC
RN^60@9201%&	9,200	1/8	C, N, R	H, J, K, C, E	B, D	S	P, R	ANG,DAL,IRC
RN^60@9311%&	9,310	1/8	C, N, R	H, J, K, C, E	B, D, F	S	P, R	ANG,DAL,IRC
RN^60@9421%&	9,420	1/8	C, N, R	H, J, K, C, E	B, D	S	P, R	ANG,DAL,IRC
RN^60@9531%&	9,530	1/8	C, N, R	H, J, K, C, E	B, D, F	S	P, R	ANG,DAL,IRC
	Resistance	Power	Term.	Char.	Res.	Level 1	Level 2	
Part Number	Value (Ohms)	Rating (W)	Type (^)	(@)	Tol. (%)	(FRL) (&)	(FRL) (&)	Manufacturer
RN^60@9651%&	9,650	1/8	C, N, R	H, J, K, C, E	B, D	S	P, R	ANG,DAL,IRC
RN^60@9761%&	9,760	1/8	C, N, R	H, J, K, C, E	B, D, F	S	P, R	ANG,DAL,IRC
RN^60@9881%&	9,880	1/8	C, N, R	H, J, K, C, E	B, D	S	P, R	ANG,DAL,IRC

	Resistance	Power	Term.	Char.	Res.	Level 1	Level 2	
Part Number	Value (Ohms)	Rating (W)	Type (^)	(@)	Tol. (%)	(FRL) (&)	(FRL) (&)	Manufacturer
RN^60@1002%&	10,000	1/8	C, N, R	H, J, K, C, E	B, D, F	S	P, R	ANG,DAL,IRC
RN^60@1012%&	10,100	1/8	C, N, R	H, J, K, C, E	B, D	S	P, R	ANG,DAL,IRC
RN^60@1022%&	10,200	1/8	C, N, R	H, J, K, C, E	B, D, F	S	P, R	ANG,DAL,IRC
RN^60@1042%&	10,400	1/8	C, N, R	H, J, K, C, E	B, D	S	P, R	ANG,DAL,IRC
RN^60@1052%&	10,500	1/8	C, N, R	H, J, K, C, E	B, D, F	S	P, R	ANG,DAL,IRC
RN^60@1062%&	10,600	1/8	C, N, R	H, J, K, C, E	B, D	S	P, R	ANG,DAL,IRC
RN^60@1072%&	10,700	1/8	C, N, R	H, J, K, C, E	B, D, F	S	P, R	ANG,DAL,IRC
	Resistance	Power	Term.	Char.	Res.	Level 1	Level 2	
Part Number	Value (Ohms)	Rating (W)	Type (^)	(@)	Tol. (%)	(FRL) (&)	(FRL) (&)	Manufacturer
RN^60@1092%&	10,900	1/8	C, N, R	H, J, K, C, E	B, D	S	P, R	ANG,DAL,IRC
RN^60@1102%&	11,000	1/8	C, N, R	H, J, K, C, E	B, D, F	S	P, R	ANG,DAL,IRC
RN^60@1112%&	11,100	1/8	C, N, R	H, J, K, C, E	B, D	S	P, R	ANG,DAL,IRC
RN^60@1132%&	11,300	1/8	C, N, R	H, J, K, C, E	B, D, F	S	P, R	ANG,DAL,IRC
RN^60@1142%&	11,400	1/8	C, N, R	H, J, K, C, E	B, D	S	P, R	ANG,DAL,IRC
RN^60@1152%&	11,500	1/8	C, N, R	H, J, K, C, E	B, D, F	S	P, R	ANG,DAL,IRC
RN^60@1172%&	11,700	1/8	C, N, R	H, J, K, C, E	B, D	S	P, R	ANG,DAL,IRC
	Resistance	Power	Term.	Char.	Res.	Level 1	Level 2	
Part Number	Value (Ohms)	Rating (W)	Type (^)	(@)	Tol. (%)	(FRL) (&)	(FRL) (&)	Manufacturer
RN^60@1182%&	11,800	1/8	C, N, R	H, J, K, C, E	B, D, F	S	P, R	ANG,DAL,IRC
RN^60@1202%&	12,000	1/8	C, N, R	H, J, K, C, E	B, D	S	P, R	ANG,DAL,IRC
RN^60@1212%&	12,100	1/8	C, N, R	H, J, K, C, E	B, D, F	S	P, R	ANG,DAL,IRC
RN^60@1232%&	12,300	1/8	C, N, R	H, J, K, C, E	B, D	S	P, R	ANG,DAL,IRC
RN^60@1242%&	12,400	1/8	C, N, R	H, J, K, C, E	B, D, F	S	P, R	ANG,DAL,IRC
RN^60@1262%&	12,600	1/8	C, N, R	H, J, K, C, E	B, D	S	P, R	ANG,DAL,IRC
RN^60@1272%&	12,700	1/8	C, N, R	H, J, K, C, E	B, D, F	S	P, R	ANG,DAL,IRC
	Resistance	Power	Term.	Char.	Res.	Level 1	Level 2	
Part Number	Value (Ohms)	Rating (W)	Type (^)	(@)	Tol. (%)	(FRL) (&)	(FRL) (&)	Manufacturer
RN^60@1292%&	12,900	1/8	C, N, R	H, J, K, C, E	B, D	S	P, R	ANG,DAL,IRC
RN^60@1302%&	13,000	1/8	C, N, R	H, J, K, C, E	B, D, F	S	P, R	ANG,DAL,IRC
RN^60@1322%&	13,200	1/8	C, N, R	H, J, K, C, E	B, D	S	P, R	ANG,DAL,IRC
RN^60@1332%&	13,300	1/8	C, N, R	H, J, K, C, E	B, D, F	S	P, R	ANG,DAL,IRC
RN^60@1352%&	13,500	1/8	C, N, R	H, J, K, C, E	B, D	S	P, R	ANG,DAL,IRC
RN^60@1372%&	13,700	1/8	C, N, R	H, J, K, C, E	B, D, F	S	P, R	ANG,DAL,IRC
RN^60@1382%&	13,800	1/8	C, N, R	H, J, K, C, E	B, D	S	P, R	ANG,DAL,IRC
	Resistance	Power	Term.	Char.	Res.	Level 1	Level 2	
Part Number	Value (Ohms)	Rating (W)	Type (^)	(@)	Tol. (%)	(FRL) (&)	(FRL) (&)	Manufacturer
RN^60@1402%&	14,000	1/8	C, N, R	H, J, K, C, E	B, D, F	S	P, R	ANG,DAL,IRC
RN^60@1422%&	14,200	1/8	C, N, R	H, J, K, C, E	B, D	S	P, R	ANG,DAL,IRC
RN^60@1432%&	14,300	1/8	C, N, R	H, J, K, C, E	B, D, F	S	P, R	ANG,DAL,IRC
RN^60@1452%&	14,500	1/8	C, N, R	H, J, K, C, E	B, D	S	P, R	ANG,DAL,IRC
RN^60@1472%&	14,700	1/8	C, N, R	H, J, K, C, E	B, D, F	S	P, R	ANG,DAL,IRC
RN^60@1492%&	14,900	1/8	C, N, R	H, J, K, C, E	B, D	S	P, R	ANG,DAL,IRC
RN^60@1502%&	15,000	1/8	C, N, R	H, J, K, C, E	B, D, F	S	P, R	ANG,DAL,IRC

	Resistance	Power	Term.	Char.	Res.	Level 1	Level 2	
Part Number	Value (Ohms)	Rating (W)	Type (^)	(@)	Tol. (%)	(FRL) (&)	(FRL) (&)	Manufacturer
RN^60@1522%&	15,200	1/8	C, N, R	H, J, K, C, E	B, D	S	P, R	ANG,DAL,IRC
RN^60@1542%&	15,400	1/8	C, N, R	H, J, K, C, E	B, D, F	S	P, R	ANG,DAL,IRC
RN^60@1562%&	15,600	1/8	C, N, R	H, J, K, C, E	B, D	S	P, R	ANG,DAL,IRC
RN^60@1582%&	15,800	1/8	C, N, R	H, J, K, C, E	B, D, F	S	P, R	ANG,DAL,IRC
RN^60@1602%&	16,000	1/8	C, N, R	H, J, K, C, E	B, D	S	P, R	ANG,DAL,IRC
RN^60@1622%&	16,200	1/8	C, N, R	H, J, K, C, E	B, D, F	S	P, R	ANG,DAL,IRC
RN^60@1642%&	16,400	1/8	C, N, R	H, J, K, C, E	B, D	S	P, R	ANG,DAL,IRC
	Resistance	Power	Term.	Char.	Res.	Level 1	Level 2	
Part Number	Value (Ohms)	Rating (W)	Type (^)	(@)	Tol. (%)	(FRL) (&)	(FRL) (&)	Manufacturer
RN^60@1652%&	16,500	1/8	C, N, R	H, J, K, C, E	B, D, F	S	P, R	ANG,DAL,IRC
RN^60@1672%&	16,700	1/8	C, N, R	H, J, K, C, E	B, D	S	P, R	ANG,DAL,IRC
RN^60@1692%&	16,900	1/8	C, N, R	H, J, K, C, E	B, D, F	S	P, R	ANG,DAL,IRC
RN^60@1722%&	17,200	1/8	C, N, R	H, J, K, C, E	B, D	S	P, R	ANG,DAL,IRC
RN^60@1742%&	17,400	1/8	C, N, R	H, J, K, C, E	B, D, F	S	P, R	ANG,DAL,IRC
RN^60@1762%&	17,600	1/8	C, N, R	H, J, K, C, E	B, D	S	P, R	ANG,DAL,IRC
RN^60@1782%&	17,800	1/8	C, N, R	H, J, K, C, E	B, D, F	S	P, R	ANG,DAL,IRC
	Resistance	Power	Term.	Char.	Res.	Level 1	Level 2	
Part Number	Value (Ohms)	Rating (W)	Type (^)	(@)	Tol. (%)	(FRL) (&)	(FRL) (&)	Manufacturer
RN^60@1802%&	18,000	1/8	C, N, R	H, J, K, C, E	B, D	S	P, R	ANG,DAL,IRC
RN^60@1822%&	18,200	1/8	C, N, R	H, J, K, C, E	B, D, F	S	P, R	ANG,DAL,IRC
RN^60@1842%&	18,400	1/8	C, N, R	H, J, K, C, E	B, D	S	P, R	ANG,DAL,IRC
RN^60@1872%&	18,700	1/8	C, N, R	H, J, K, C, E	B, D, F	S	P, R	ANG,DAL,IRC
RN^60@1892%&	18,900	1/8	C, N, R	H, J, K, C, E	B, D	S	P, R	ANG,DAL,IRC
RN^60@1912%&	19,100	1/8	C, N, R	H, J, K, C, E	B, D, F	S	P, R	ANG,DAL,IRC
RN^60@1932%&	19,300	1/8	C, N, R	H, J, K, C, E	B, D	S	P, R	ANG,DAL,IRC
	Resistance	Power	Term.	Char.	Res.	Level 1	Level 2	
Part Number	Value (Ohms)	Rating (W)	Type (^)	(@)	Tol. (%)	(FRL) (&)	(FRL) (&)	Manufacturer
RN^60@1962%&	19,600	1/8	C, N, R	H, J, K, C, E	B, D, F	S	P, R	ANG,DAL,IRC
RN^60@1982%&	19,800	1/8	C, N, R	H, J, K, C, E	B, D	S	P, R	ANG,DAL,IRC
RN^60@2002%&	20,000	1/8	C, N, R	H, J, K, C, E	B, D, F	S	P, R	ANG,DAL,IRC
RN^60@2032%&	20,300	1/8	C, N, R	H, J, K, C, E	B, D	S	P, R	ANG,DAL,IRC
RN^60@2052%&	20,500	1/8	C, N, R	H, J, K, C, E	B, D, F	S	P, R	ANG,DAL,IRC
RN^60@2082%&	20,800	1/8	C, N, R	H, J, K, C, E	B, D	S	P, R	ANG,DAL,IRC
RN^60@2102%&	21,000	1/8	C, N, R	H, J, K, C, E	B, D, F	S	P, R	ANG,DAL,IRC
	Resistance	Power	Term.	Char.	Res.	Level 1	Level 2	
Part Number	Value (Ohms)	Rating (W)	Type (^)	(@)	Tol. (%)	(FRL) (&)	(FRL) (&)	Manufacturer
RN^60@2132%&	21,300	1/8	C, N, R	H, J, K, C, E	B, D	S	P, R	ANG,DAL,IRC
RN^60@2152%&	21,500	1/8	C, N, R	H, J, K, C, E	B, D, F	S	P, R	ANG,DAL,IRC
RN^60@2182%&	21,800	1/8	C, N, R	H, J, K, C, E	B, D	S	P, R	ANG,DAL,IRC
RN^60@2212%&	22,100	1/8	C, N, R	H, J, K, C, E	B, D, F	S	P, R	ANG,DAL,IRC
RN^60@2232%&	22,300	1/8	C, N, R	H, J, K, C, E	B, D	S	P, R	ANG,DAL,IRC
RN^60@2262%&	22,600	1/8	C, N, R	H, J, K, C, E	B, D, F	S	P, R	ANG,DAL,IRC
RN^60@2292%&	22,900	1/8	C, N, R	H, J, K, C, E	B, D	S	P, R	ANG,DAL,IRC
	Resistance	Power	Term.	Char.	Res.	Level 1	Level 2	
Part Number	Value (Ohms)	Rating (W)	Type (^)	(@)	Tol. (%)	(FRL) (&)	(FRL) (&)	Manufacturer

RN^60@2322%&	23,200	1/8	C, N, R	H, J, K, C, E	B, D, F	S	P, R	ANG,DAL,IRC
RN^60@2342%&	23,400	1/8	C, N, R	H, J, K, C, E	B, D	S	P, R	ANG,DAL,IRC
RN^60@2372%&	23,700	1/8	C, N, R	H, J, K, C, E	B, D, F	S	P, R	ANG,DAL,IRC
RN^60@2402%&	24,000	1/8	C, N, R	H, J, K, C, E	B, D	S	P, R	ANG,DAL,IRC
RN^60@2432%&	24,300	1/8	C, N, R	H, J, K, C, E	B, D, F	S	P, R	ANG,DAL,IRC
RN^60@2462%&	24,600	1/8	C, N, R	H, J, K, C, E	B, D	S	P, R	ANG,DAL,IRC
RN^60@2492%&	24,900	1/8	C, N, R	H, J, K, C, E	B, D, F	S	P, R	ANG,DAL,IRC
	Resistance	Power	Term.	Char.	Res.	Level 1	Level 2	
Part Number	Value (Ohms)	Rating (W)	Type (^)	(@)	Tol. (%)	(FRL) (&)	(FRL) (&)	Manufacturer
RN^60@2522%&	25,200	1/8	C, N, R	H, J, K, C, E	B, D	S	P, R	ANG,DAL,IRC
RN^60@2552%&	25,500	1/8	C, N, R	H, J, K, C, E	B, D, F	S	P, R	ANG,DAL,IRC
RN^60@2582%&	25,800	1/8	C, N, R	H, J, K, C, E	B, D	S	P, R	ANG,DAL,IRC
RN^60@2612%&	26,100	1/8	C, N, R	H, J, K, C, E	B, D, F	S	P, R	ANG,DAL,IRC
RN^60@2642%&	26,400	1/8	C, N, R	H, J, K, C, E	B, D	S	P, R	ANG,DAL,IRC
RN^60@2672%&	26,700	1/8	C, N, R	H, J, K, C, E	B, D, F	S	P, R	ANG,DAL,IRC
RN^60@2712%&	27,100	1/8	C, N, R	H, J, K, C, E	B, D	S	P, R	ANG,DAL,IRC
	Resistance	Power	Term.	Char.	Res.	Level 1	Level 2	
Part Number	Value (Ohms)	Rating (W)	Type (^)	(@)	Tol. (%)	(FRL) (&)	(FRL) (&)	Manufacturer
RN^60@2742%&	27,400	1/8	C, N, R	H, J, K, C, E	B, D, F	S	P, R	ANG,DAL,IRC
RN^60@2772%&	27,700	1/8	C, N, R	H, J, K, C, E	B, D	S	P, R	ANG,DAL,IRC
RN^60@2802%&	28,000	1/8	C, N, R	H, J, K, C, E	B, D, F	S	P, R	ANG,DAL,IRC
RN^60@2842%&	28,400	1/8	C, N, R	H, J, K, C, E	B, D	S	P, R	ANG,DAL,IRC
RN^60@2872%&	28,700	1/8	C, N, R	H, J, K, C, E	B, D, F	S	P, R	ANG,DAL,IRC
RN^60@2912%&	29,100	1/8	C, N, R	H, J, K, C, E	B, D	S	P, R	ANG,DAL,IRC
RN^60@2942%&	29,400	1/8	C, N, R	H, J, K, C, E	B, D, F	S	P, R	ANG,DAL,IRC
	Resistance	Power	Term.	Char.	Res.	Level 1	Level 2	
Part Number	Value (Ohms)	Rating (W)	Type (^)	(@)	Tol. (%)	(FRL) (&)	(FRL) (&)	Manufacturer
RN^60@2982%&	29,800	1/8	C, N, R	H, J, K, C, E	B, D	S	P, R	ANG,DAL,IRC
RN^60@3012%&	30,100	1/8	C, N, R	H, J, K, C, E	B, D, F	S	P, R	ANG,DAL,IRC
RN^60@3052%&	30,500	1/8	C, N, R	H, J, K, C, E	B, D	S	P, R	ANG,DAL,IRC
RN^60@3092%&	30,900	1/8	C, N, R	H, J, K, C, E	B, D, F	S	P, R	ANG,DAL,IRC
RN^60@3122%&	31,200	1/8	C, N, R	H, J, K, C, E	B, D	S	P, R	ANG,DAL,IRC
RN^60@3162%&	31,600	1/8	C, N, R	H, J, K, C, E	B, D, F	S	P, R	ANG,DAL,IRC
RN^60@3202%&	32,000	1/8	C, N, R	H, J, K, C, E	B, D	S	P, R	ANG,DAL,IRC
	Resistance	Power	Term.	Char.	Res.	Level 1	Level 2	
Part Number	Value (Ohms)	Rating (W)	Type (^)	(@)	Tol. (%)	(FRL) (&)	(FRL) (&)	Manufacturer
RN^60@3242%&	32,400	1/8	C, N, R	H, J, K, C, E	B, D, F	S	P, R	ANG,DAL,IRC
RN^60@3282%&	32,800	1/8	C, N, R	H, J, K, C, E	B, D	S	P, R	ANG,DAL,IRC
RN^60@3322%&	33,200	1/8	C, N, R	H, J, K, C, E	B, D, F	S	P, R	ANG,DAL,IRC
RN^60@3362%&	33,600	1/8	C, N, R	H, J, K, C, E	B, D	S	P, R	ANG,DAL,IRC
RN^60@3402%&	34,000	1/8	C, N, R	H, J, K, C, E	B, D, F	S	P, R	ANG,DAL,IRC
RN^60@3442%&	34,400	1/8	C, N, R	H, J, K, C, E	B, D	S	P, R	ANG,DAL,IRC
RN^60@3482%&	34,800	1/8	C, N, R	H, J, K, C, E	B, D, F	S	P, R	ANG,DAL,IRC
	Resistance	Power	Term.	Char.	Res.	Level 1	Level 2	
Part Number	Value (Ohms)	Rating (W)	Type (^)	(@)	Tol. (%)	(FRL) (&)	(FRL) (&)	Manufacturer
RN^60@3522%&	35,200	1/8	C, N, R	H, J, K, C, E	B, D	S	P, R	ANG,DAL,IRC
RN^60@3572%&	35,700	1/8	C, N, R	H, J, K, C, E	B, D, F	S	P, R	ANG,DAL,IRC

RN^60@3612%&	36,100	1/8	C, N, R	H, J, K, C, E	B, D	S	P, R	ANG,DAL,IRC
RN^60@3652%&	36,500	1/8	C, N, R	H, J, K, C, E	B, D, F	S	P, R	ANG,DAL,IRC
RN^60@3702%&	37,000	1/8	C, N, R	H, J, K, C, E	B, D	S	P, R	ANG,DAL,IRC
RN^60@3742%&	37,400	1/8	C, N, R	H, J, K, C, E	B, D, F	S	P, R	ANG,DAL,IRC
RN^60@3792%&	37,900	1/8	C, N, R	H, J, K, C, E	B, D	S	P, R	ANG,DAL,IRC
	Resistance	Power	Term.	Char.	Res.	Level 1	Level 2	
Part Number	Value (Ohms)	Rating (W)	Type (^)	(@)	Tol. (%)	(FRL) (&)	(FRL) (&)	Manufacturer
RN^60@3832%&	38,300	1/8	C, N, R	H, J, K, C, E	B, D, F	S	P, R	ANG,DAL,IRC
RN^60@3882%&	38,800	1/8	C, N, R	H, J, K, C, E	B, D	S	P, R	ANG,DAL,IRC
RN^60@3922%&	39,200	1/8	C, N, R	H, J, K, C, E	B, D, F	S	P, R	ANG,DAL,IRC
RN^60@3972%&	39,700	1/8	C, N, R	H, J, K, C, E	B, D	S	P, R	ANG,DAL,IRC
RN^60@4022%&	40,200	1/8	C, N, R	H, J, K, C, E	B, D, F	S	P, R	ANG,DAL,IRC
RN^60@4072%&	40,700	1/8	C, N, R	H, J, K, C, E	B, D	S	P, R	ANG,DAL,IRC
RN^60@4122%&	41,200	1/8	C, N, R	H, J, K, C, E	B, D, F	S	P, R	ANG,DAL,IRC
	Resistance	Power	Term.	Char.	Res.	Level 1	Level 2	
Part Number	Value (Ohms)	Rating (W)	Type (^)	(@)	Tol. (%)	(FRL) (&)	(FRL) (&)	Manufacturer
RN^60@4172%&	41,700	1/8	C, N, R	H, J, K, C, E	B, D	S	P, R	ANG,DAL,IRC
RN^60@4222%&	42,200	1/8	C, N, R	H, J, K, C, E	B, D, F	S	P, R	ANG,DAL,IRC
RN^60@4272%&	42,700	1/8	C, N, R	H, J, K, C, E	B, D	S	P, R	ANG,DAL,IRC
RN^60@4322%&	43,200	1/8	C, N, R	H, J, K, C, E	B, D, F	S	P, R	ANG,DAL,IRC
RN^60@4372%&	43,700	1/8	C, N, R	H, J, K, C, E	B, D	S	P, R	ANG,DAL,IRC
RN^60@4422%&	44,200	1/8	C, N, R	H, J, K, C, E	B, D, F	S	P, R	ANG,DAL,IRC
RN^60@4482%&	44,800	1/8	C, N, R	H, J, K, C, E	B, D	S	P, R	ANG,DAL,IRC
	Resistance	Power	Term.	Char.	Res.	Level 1	Level 2	
Part Number	Value (Ohms)	Rating (W)	Type (^)	(@)	Tol. (%)	(FRL) (&)	(FRL) (&)	Manufacturer
RN^60@4532%&	45,300	1/8	C, N, R	H, J, K, C, E	B, D, F	S	P, R	ANG,DAL,IRC
RN^60@4592%&	45,900	1/8	C, N, R	H, J, K, C, E	B, D	S	P, R	ANG,DAL,IRC
RN^60@4642%&	46,400	1/8	C, N, R	H, J, K, C, E	B, D, F	S	P, R	ANG,DAL,IRC
RN^60@4702%&	47,000	1/8	C, N, R	H, J, K, C, E	B, D	S	P, R	ANG,DAL,IRC
RN^60@4752%&	47,500	1/8	C, N, R	H, J, K, C, E	B, D, F	S	P, R	ANG,DAL,IRC
RN^60@4812%&	48,100	1/8	C, N, R	H, J, K, C, E	B, D	S	P, R	ANG,DAL,IRC
RN^60@4872%&	48,700	1/8	C, N, R	H, J, K, C, E	B, D, F	S	P, R	ANG,DAL,IRC
	Resistance	Power	Term.	Char.	Res.	Level 1	Level 2	
Part Number	Value (Ohms)	Rating (W)	Type (^)	(@)	Tol. (%)	(FRL) (&)	(FRL) (&)	Manufacturer
RN^60@4932%&	49,300	1/8	C, N, R	H, J, K, C, E	B, D	S	P, R	ANG,DAL,IRC
RN^60@4992%&	49,900	1/8	C, N, R	H, J, K, C, E	B, D, F	S	P, R	ANG,DAL,IRC
RN^60@5052%&	50,500	1/8	C, N, R	H, J, K, C, E	B, D	S	P, R	ANG,DAL,IRC
RN^60@5112%&	51,100	1/8	C, N, R	H, J, K, C, E	B, D, F	S	P, R	ANG,DAL,IRC
RN^60@5172%&	51,700	1/8	C, N, R	H, J, K, C, E	B, D	S	P, R	ANG,DAL,IRC
RN^60@5232%&	52,300	1/8	C, N, R	H, J, K, C, E	B, D, F	S	P, R	ANG,DAL,IRC
RN^60@5302%&	53,000	1/8	C, N, R	H, J, K, C, E	B, D	S	P, R	ANG,DAL,IRC
	Resistance	Power	Term.	Char.	Res.	Level 1	Level 2	
Part Number	Value (Ohms)	Rating (W)	Type (^)	(@)	Tol. (%)	(FRL) (&)	(FRL) (&)	Manufacturer
RN^60@5362%&	53,600	1/8	C, N, R	H, J, K, C, E	B, D, F	S	P, R	ANG,DAL,IRC
RN^60@5422%&	54,200	1/8	C, N, R	H, J, K, C, E	B, D	S	P, R	ANG,DAL,IRC
RN^60@5492%&	54,900	1/8	C, N, R	H, J, K, C, E	B, D, F	S	P, R	ANG,DAL,IRC
RN^60@5562%&	55,600	1/8	C, N, R	H, J, K, C, E	B, D	S	P, R	ANG,DAL,IRC

RN^60@5622%&	56,200	1/8	C, N, R	H, J, K, C, E	B, D, F	S	P, R	ANG,DAL,IRC
RN^60@5692%&	56,900	1/8	C, N, R	H, J, K, C, E	B, D	S	P, R	ANG,DAL,IRC
RN^60@5762%&	57,600	1/8	C, N, R	H, J, K, C, E	B, D, F	S	P, R	ANG,DAL,IRC
	Resistance	Power	Term.	Char.	Res.	Level 1	Level 2	
Part Number	Value (Ohms)	Rating (W)	Type (^)	(@)	Tol. (%)	(FRL) (&)	(FRL) (&)	Manufacturer
RN^60@5832%&	58,300	1/8	C, N, R	H, J, K, C, E	B, D	S	P, R	ANG,DAL,IRC
RN^60@5902%&	59,000	1/8	C, N, R	H, J, K, C, E	B, D, F	S	P, R	ANG,DAL,IRC
RN^60@5972%&	59,700	1/8	C, N, R	H, J, K, C, E	B, D	S	P, R	ANG,DAL,IRC
RN^60@6042%&	60,400	1/8	C, N, R	H, J, K, C, E	B, D, F	S	P, R	ANG,DAL,IRC
RN^60@6122%&	61,200	1/8	C, N, R	H, J, K, C, E	B, D	S	P, R	ANG,DAL,IRC
RN^60@6192%&	61,900	1/8	C, N, R	H, J, K, C, E	B, D, F	S	P, R	ANG,DAL,IRC
RN^60@6262%&	62,600	1/8	C, N, R	H, J, K, C, E	B, D	S	P, R	ANG,DAL,IRC
	Resistance	Power	Term.	Char.	Res.	Level 1	Level 2	
Part Number	Value (Ohms)	Rating (W)	Type (^)	(@)	Tol. (%)	(FRL) (&)	(FRL) (&)	Manufacturer
RN^60@6342%&	63,400	1/8	C, N, R	H, J, K, C, E	B, D, F	S	P, R	ANG,DAL,IRC
RN^60@6422%&	64,200	1/8	C, N, R	H, J, K, C, E	B, D	S	P, R	ANG,DAL,IRC
RN^60@6492%&	64,900	1/8	C, N, R	H, J, K, C, E	B, D, F	S	P, R	ANG,DAL,IRC
RN^60@6572%&	65,700	1/8	C, N, R	H, J, K, C, E	B, D	S	P, R	ANG,DAL,IRC
RN^60@6652%&	66,500	1/8	C, N, R	H, J, K, C, E	B, D, F	S	P, R	ANG,DAL,IRC
RN^60@6732%&	67,300	1/8	C, N, R	H, J, K, C, E	B, D	S	P, R	ANG,DAL,IRC
RN^60@6812%&	68,100	1/8	C, N, R	H, J, K, C, E	B, D, F	S	P, R	ANG,DAL,IRC
	Resistance	Power	Term.	Char.	Res.	Level 1	Level 2	
Part Number	Value (Ohms)	Rating (W)	Type (^)	(@)	Tol. (%)	(FRL) (&)	(FRL) (&)	Manufacturer
RN^60@6902%&	69,000	1/8	C, N, R	H, J, K, C, E	B, D	S	P, R	ANG,DAL,IRC
RN^60@6982%&	69,800	1/8	C, N, R	H, J, K, C, E	B, D, F	S	P, R	ANG,DAL,IRC
RN^60@7062%&	70,600	1/8	C, N, R	H, J, K, C, E	B, D	S	P, R	ANG,DAL,IRC
RN^60@7152%&	71,500	1/8	C, N, R	H, J, K, C, E	B, D, F	S	P, R	ANG,DAL,IRC
RN^60@7232%&	72,300	1/8	C, N, R	H, J, K, C, E	B, D	S	P, R	ANG,DAL,IRC
RN^60@7322%&	73,200	1/8	C, N, R	H, J, K, C, E	B, D, F	S	P, R	ANG,DAL,IRC
RN^60@7412%&	74,100	1/8	C, N, R	H, J, K, C, E	B, D	S	P, R	ANG,DAL,IRC
	Resistance	Power	Term.	Char.	Res.	Level 1	Level 2	
Part Number	Value (Ohms)	Rating (W)	Type (^)	(@)	Tol. (%)	(FRL) (&)	(FRL) (&)	Manufacturer
RN^60@7502%&	75,000	1/8	C, N, R	H, J, K, C, E	B, D, F	S	P, R	ANG,DAL,IRC
RN^60@7592%&	75,900	1/8	C, N, R	H, J, K, C, E	B, D	S	P, R	ANG,DAL,IRC
RN^60@7682%&	76,800	1/8	C, N, R	H, J, K, C, E	B, D, F	S	P, R	ANG,DAL,IRC
RN^60@7772%&	77,700	1/8	C, N, R	H, J, K, C, E	B, D	S	P, R	ANG,DAL,IRC
RN^60@7872%&	78,700	1/8	C, N, R	H, J, K, C, E	B, D, F	S	P, R	ANG,DAL,IRC
RN^60@7962%&	79,600	1/8	C, N, R	H, J, K, C, E	B, D	S	P, R	ANG,DAL,IRC
RN^60@8062%&	80,600	1/8	C, N, R	H, J, K, C, E	B, D, F	S	P, R	ANG,DAL,IRC
	Resistance	Power	Term.	Char.	Res.	Level 1	Level 2	
Part Number	Value (Ohms)	Rating (W)	Type (^)	(@)	Tol. (%)	(FRL) (&)	(FRL) (&)	Manufacturer
RN^60@8162%&	81,600	1/8	C, N, R	H, J, K, C, E	B, D	S	P, R	ANG,DAL,IRC
RN^60@8252%&	82,500	1/8	C, N, R	H, J, K, C, E	B, D, F	S	P, R	ANG,DAL,IRC
RN^60@8352%&	83,500	1/8	C, N, R	H, J, K, C, E	B, D	S	P, R	ANG,DAL,IRC
RN^60@8452%&	84,500	1/8	C, N, R	H, J, K, C, E	B, D, F	S	P, R	ANG,DAL,IRC
RN^60@8562%&	85,600	1/8	C, N, R	H, J, K, C, E	B, D	S	P, R	ANG,DAL,IRC
RN^60@8662%&	86,600	1/8	C, N, R	H, J, K, C, E	B, D, F	S	P, R	ANG,DAL,IRC

RN^60@8762%&	87,600	1/8	C, N, R	H, J, K, C, E	B, D	S	P, R	ANG,DAL,IRC
	Resistance	Power	Term.	Char.	Res.	Level 1	Level 2	
Part Number	Value (Ohms)	Rating (W)	Type (^)	(@)	Tol. (%)	(FRL) (&)	(FRL) (&)	Manufacturer
RN^60@8872%&	88,700	1/8	C, N, R	H, J, K, C, E	B, D, F	S	P, R	ANG,DAL,IRC
RN^60@8982%&	89,800	1/8	C, N, R	H, J, K, C, E	B, D	S	P, R	ANG,DAL,IRC
RN^60@9092%&	90,900	1/8	C, N, R	H, J, K, C, E	B, D, F	S	P, R	ANG,DAL,IRC
RN^60@9202%&	92,000	1/8	C, N, R	H, J, K, C, E	B, D	S	P, R	ANG,DAL,IRC
RN^60@9312%&	93,100	1/8	C, N, R	H, J, K, C, E	B, D, F	S	P, R	ANG,DAL,IRC
RN^60@9422%&	94,200	1/8	C, N, R	H, J, K, C, E	B, D	S	P, R	ANG,DAL,IRC
RN^60@9532%&	95,300	1/8	C, N, R	H, J, K, C, E	B, D, F	S	P, R	ANG,DAL,IRC
	Resistance	Power	Term.	Char.	Res.	Level 1	Level 2	
Part Number	Value (Ohms)	Rating (W)	Type (^)	(@)	Tol. (%)	(FRL) (&)	(FRL) (&)	Manufacturer
RN^60@9652%&	96,500	1/8	C, N, R	H, J, K, C, E	B, D	S	P, R	ANG,DAL,IRC
RN^60@9762%&	97,600	1/8	C, N, R	H, J, K, C, E	B, D, F	S	P, R	ANG,DAL,IRC
RN^60@9882%&	98,800	1/8	C, N, R	H, J, K, C, E	B, D	S	P, R	ANG,DAL,IRC

RN^60 Film Resistors: 100,000 Ohms through 988,000 Ohms

	Resistance	Power	Term.	Char.	Res.	Level 1	Level 2	
Part Number	Value (Ohms)	Rating (W)	Type (^)	(@)	Tol. (%)	(FRL) (&)	(FRL) (&)	Manufacturer
RN^60@1003%&	100,000	1/8	C, N, R	H, J, K, C, E	B, D, F	S	P, R	ANG,DAL,IRC
RN^60@1013%&	101,000	1/8	C, N, R	H, J, K, C, E	B, D	S	P, R	ANG,DAL
RN^60@1023%&	102,000	1/8	C, N, R	H, J, K, C, E	B, D, F	S	P, R	ANG,DAL
RN^60@1043%&	104,000	1/8	C, N, R	H, J, K, C, E	B, D	S	P, R	ANG,DAL
RN^60@1053%&	105,000	1/8	C, N, R	H, J, K, C, E	B, D, F	S	P, R	ANG,DAL
RN^60@1063%&	106,000	1/8	C, N, R	H, J, K, C, E	B, D	S	P, R	ANG,DAL
RN^60@1073%&	107,000	1/8	C, N, R	H, J, K, C, E	B, D, F	S	P, R	ANG,DAL
	Resistance	Power	Term.	Char.	Res.	Level 1	Level 2	
Part Number	Value (Ohms)	Rating (W)	Type (^)	(@)	Tol. (%)	(FRL) (&)	(FRL) (&)	Manufacturer
RN^60@1093%&	109,000	1/8	C, N, R	H, J, K, C, E	B, D	S	P, R	ANG,DAL
RN^60@1103%&	110,000	1/8	C, N, R	H, J, K, C, E	B, D, F	S	P, R	ANG,DAL
RN^60@1113%&	111,000	1/8	C, N, R	H, J, K, C, E	B, D	S	P, R	ANG,DAL
RN^60@1133%&	113,000	1/8	C, N, R	H, J, K, C, E	B, D, F	S	P, R	ANG,DAL
RN^60@1143%&	114,000	1/8	C, N, R	H, J, K, C, E	B, D	S	P, R	ANG,DAL
RN^60@1153%&	115,000	1/8	C, N, R	H, J, K, C, E	B, D, F	S	P, R	ANG,DAL
RN^60@1173%&	117,000	1/8	C, N, R	H, J, K, C, E	B, D	S	P, R	ANG,DAL
	Resistance	Power	Term.	Char.	Res.	Level 1	Level 2	
Part Number	Value (Ohms)	Rating (W)	Type (^)	(@)	Tol. (%)	(FRL) (&)	(FRL) (&)	Manufacturer
RN^60@1183%&	118,000	1/8	C, N, R	H, J, K, C, E	B, D, F	S	P, R	ANG,DAL
RN^60@1203%&	120,000	1/8	C, N, R	H, J, K, C, E	B, D	S	P, R	ANG,DAL
RN^60@1213%&	121,000	1/8	C, N, R	H, J, K, C, E	B, D, F	S	P, R	ANG,DAL
RN^60@1233%&	123,000	1/8	C, N, R	H, J, K, C, E	B, D	S	P, R	ANG,DAL
RN^60@1243%&	124,000	1/8	C, N, R	H, J, K, C, E	B, D, F	S	P, R	ANG,DAL
RN^60@1263%&	126,000	1/8	C, N, R	H, J, K, C, E	B, D	S	P, R	ANG,DAL
RN^60@1273%&	127,000	1/8	C, N, R	H, J, K, C, E	B, D, F	S	P, R	ANG,DAL

	Resistance	Power	Term.	Char.	Res.	Level 1	Level 2	
Part Number	Value (Ohms)	Rating (W)	Type (^)	(@)	Tol. (%)	(FRL) (&)	(FRL) (&)	Manufacturer
RN^60@1293%&	129,000	1/8	C, N, R	H, J, K, C, E	B, D	S	P, R	ANG,DAL
RN^60@1303%&	130,000	1/8	C, N, R	H, J, K, C, E	B, D, F	S	P, R	ANG,DAL
RN^60@1323%&	132,000	1/8	C, N, R	H, J, K, C, E	B, D	S	P, R	ANG,DAL
RN^60@1333%&	133,000	1/8	C, N, R	H, J, K, C, E	B, D, F	S	P, R	ANG,DAL
RN^60@1353%&	135,000	1/8	C, N, R	H, J, K, C, E	B, D	S	P, R	ANG,DAL
RN^60@1373%&	137,000	1/8	C, N, R	H, J, K, C, E	B, D, F	S	P, R	ANG,DAL
RN^60@1383%&	138,000	1/8	C, N, R	H, J, K, C, E	B, D	S	P, R	ANG,DAL
	Resistance	Power	Term.	Char.	Res.	Level 1	Level 2	
Part Number	Value (Ohms)	Rating (W)	Type (^)	(@)	Tol. (%)	(FRL) (&)	(FRL) (&)	Manufacturer
RN^60@1403%&	140,000	1/8	C, N, R	H, J, K, C, E	B, D, F	S	P, R	ANG,DAL
RN^60@1423%&	142,000	1/8	C, N, R	H, J, K, C, E	B, D	S	P, R	ANG,DAL
RN^60@1433%&	143,000	1/8	C, N, R	H, J, K, C, E	B, D, F	S	P, R	ANG,DAL
RN^60@1453%&	145,000	1/8	C, N, R	H, J, K, C, E	B, D	S	P, R	ANG,DAL
RN^60@1473%&	147,000	1/8	C, N, R	H, J, K, C, E	B, D, F	S	P, R	ANG,DAL
RN^60@1493%&	149,000	1/8	C, N, R	H, J, K, C, E	B, D	S	P, R	ANG,DAL
RN^60@1503%&	150,000	1/8	C, N, R	H, J, K, C, E	B, D, F	S	P, R	ANG,DAL
	Resistance	Power	Term.	Char.	Res.	Level 1	Level 2	
Part Number	Value (Ohms)	Rating (W)	Type (^)	(@)	Tol. (%)	(FRL) (&)	(FRL) (&)	Manufacturer
RN^60@1523%&	152,000	1/8	C, N, R	H, J, K, C, E	B, D	S	P, R	ANG,DAL
RN^60@1543%&	154,000	1/8	C, N, R	H, J, K, C, E	B, D, F	S	P, R	ANG,DAL
RN^60@1563%&	156,000	1/8	C, N, R	H, J, K, C, E	B, D	S	P, R	ANG,DAL
RN^60@1583%&	158,000	1/8	C, N, R	H, J, K, C, E	B, D, F	S	P, R	ANG,DAL
RN^60@1603%&	160,000	1/8	C, N, R	H, J, K, C, E	B, D	S	P, R	ANG,DAL
RN^60@1623%&	162,000	1/8	C, N, R	H, J, K, C, E	B, D, F	S	P, R	ANG,DAL
RN^60@1643%&	164,000	1/8	C, N, R	H, J, K, C, E	B, D	S	P, R	ANG,DAL
	Resistance	Power	Term.	Char.	Res.	Level 1	Level 2	
Part Number	Value (Ohms)	Rating (W)	Type (^)	(@)	Tol. (%)	(FRL) (&)	(FRL) (&)	Manufacturer
RN^60@1653%&	165,000	1/8	C, N, R	H, J, K, C, E	B, D, F	S	P, R	ANG,DAL
RN^60@1673%&	167,000	1/8	C, N, R	H, J, K, C, E	B, D	S	P, R	ANG,DAL
RN^60@1693%&	169,000	1/8	C, N, R	H, J, K, C, E	B, D, F	S	P, R	ANG,DAL
RN^60@1723%&	172,000	1/8	C, N, R	H, J, K, C, E	B, D	S	P, R	ANG,DAL
RN^60@1743%&	174,000	1/8	C, N, R	H, J, K, C, E	B, D, F	S	P, R	ANG,DAL
RN^60@1763%&	176,000	1/8	C, N, R	H, J, K, C, E	B, D	S	P, R	ANG,DAL
RN^60@1783%&	178,000	1/8	C, N, R	H, J, K, C, E	B, D, F	S	P, R	ANG,DAL
	Resistance	Power	Term.	Char.	Res.	Level 1	Level 2	
Part Number	Value (Ohms)	Rating (W)	Type (^)	(@)	Tol. (%)	(FRL) (&)	(FRL) (&)	Manufacturer
RN^60@1803%&	180,000	1/8	C, N, R	H, J, K, C, E	B, D	S	P, R	ANG,DAL
RN^60@1823%&	182,000	1/8	C, N, R	H, J, K, C, E	B, D, F	S	P, R	ANG,DAL
RN^60@1843%&	184,000	1/8	C, N, R	H, J, K, C, E	B, D	S	P, R	ANG,DAL
RN^60@1873%&	187,000	1/8	C, N, R	H, J, K, C, E	B, D, F	S	P, R	ANG,DAL
RN^60@1893%&	189,000	1/8	C, N, R	H, J, K, C, E	B, D	S	P, R	ANG,DAL
RN^60@1913%&	191,000	1/8	C, N, R	H, J, K, C, E	B, D, F	S	P, R	ANG,DAL
RN^60@1933%&	193,000	1/8	C, N, R	H, J, K, C, E	B, D	S	P, R	ANG,DAL
	Resistance	Power	Term.	Char.	Res.	Level 1	Level 2	
Part Number	Value (Ohms)	Rating (W)	Type (^)	(@)	Tol. (%)	(FRL) (&)	(FRL) (&)	Manufacturer

RN^60@1963%&	196,000	1/8	C, N, R	H, J, K, C, E	B, D, F	S	P, R	ANG,DAL
RN^60@1983%&	198,000	1/8	C, N, R	H, J, K, C, E	B, D	S	P, R	ANG,DAL
RN^60@2003%&	200,000	1/8	C, N, R	H, J, K, C, E	B, D, F	S	P, R	ANG,DAL
RN^60@2033%&	203,000	1/8	C, N, R	H, J, K, C, E	B, D	S	P, R	ANG, DAL
RN^60@2053%&	205,000	1/8	C, N, R	H, J, K, C, E	B, D, F	S	P, R	ANG, DAL
RN^60@2083%&	208,000	1/8	C, N, R	H, J, K, C, E	B, D	S	P, R	ANG, DAL
RN^60@2103%&	210,000	1/8	C, N, R	H, J, K, C, E	B, D, F	S	P, R	ANG, DAL
	Resistance	Power	Term.	Char.	Res.	Level 1	Level 2	
Part Number	Value (Ohms)	Rating (W)	Type (^)	(@)	Tol. (%)	(FRL) (&)	(FRL) (&)	Manufacturer
RN^60@2133%&	213,000	1/8	C, N, R	H, J, K, C, E	B, D	S	P, R	ANG, DAL
RN^60@2153%&	215,000	1/8	C, N, R	H, J, K, C, E	B, D, F	S	P, R	ANG, DAL
RN^60@2183%&	218,000	1/8	C, N, R	H, J, K, C, E	B, D	S	P, R	ANG, DAL
RN^60@2213%&	221,000	1/8	C, N, R	H, J, K, C, E	B, D, F	S	P, R	ANG, DAL
RN^60@2233%&	223,000	1/8	C, N, R	H, J, K, C, E	B, D	S	P, R	ANG, DAL
RN^60@2263%&	226,000	1/8	C, N, R	H, J, K, C, E	B, D, F	S	P, R	ANG, DAL
RN^60@2293%&	229,000	1/8	C, N, R	H, J, K, C, E	B, D	S	P, R	ANG, DAL
	Resistance	Power	Term.	Char.	Res.	Level 1	Level 2	
Part Number	Value (Ohms)	Rating (W)	Type (^)	(@)	Tol. (%)	(FRL) (&)	(FRL) (&)	Manufacturer
RN^60@2323%&	232,000	1/8	C, N, R	H, J, K, C, E	B, D, F	S	P, R	ANG, DAL
RN^60@2343%&	234,000	1/8	C, N, R	H, J, K, C, E	B, D	S	P, R	ANG, DAL
RN^60@2373%&	237,000	1/8	C, N, R	H, J, K, C, E	B, D, F	S	P, R	ANG, DAL
RN^60@2403%&	240,000	1/8	C, N, R	H, J, K, C, E	B, D	S	P, R	ANG, DAL
RN^60@2433%&	243,000	1/8	C, N, R	H, J, K, C, E	B, D, F	S	P, R	ANG, DAL
RN^60@2463%&	246,000	1/8	C, N, R	H, J, K, C, E	B, D	S	P, R	ANG, DAL
RN^60@2493%&	249,000	1/8	C, N, R	H, J, K, C, E	B, D, F	S	P, R	ANG, DAL
	Resistance	Power	Term.	Char.	Res.	Level 1	Level 2	
Part Number	Value (Ohms)	Rating (W)	Type (^)	(@)	Tol. (%)	(FRL) (&)	(FRL) (&)	Manufacturer
RN^60@2523%&	252,000	1/8	C, N, R	H, J, K, C, E	B, D	S	P, R	ANG, DAL
RN^60@2553%&	255,000	1/8	C, N, R	H, J, K, C, E	B, D, F	S	P, R	ANG, DAL
RN^60@2583%&	258,000	1/8	C, N, R	H, J, K, C, E	B, D	S	P, R	ANG, DAL
RN^60@2613%&	261,000	1/8	C, N, R	H, J, K, C, E	B, D, F	S	P, R	ANG, DAL
RN^60@2643%&	264,000	1/8	C, N, R	H, J, K, C, E	B, D	S	P, R	ANG, DAL
RN^60@2673%&	267,000	1/8	C, N, R	H, J, K, C, E	B, D, F	S	P, R	ANG, DAL
RN^60@2713%&	271,000	1/8	C, N, R	H, J, K, C, E	B, D	S	P, R	ANG, DAL
	Resistance	Power	Term.	Char.	Res.	Level 1	Level 2	
Part Number	Value (Ohms)	Rating (W)	Type (^)	(@)	Tol. (%)	(FRL) (&)	(FRL) (&)	Manufacturer
RN^60@2743%&	274,000	1/8	C, N, R	H, J, K, C, E	B, D, F	S	P, R	ANG, DAL
RN^60@2773%&	277,000	1/8	C, N, R	H, J, K, C, E	B, D	S	P, R	ANG, DAL
RN^60@2803%&	280,000	1/8	C, N, R	H, J, K, C, E	B, D, F	S	P, R	ANG, DAL
RN^60@2843%&	284,000	1/8	C, N, R	H, J, K, C, E	B, D	S	P, R	ANG, DAL
RN^60@2873%&	287,000	1/8	C, N, R	H, J, K, C, E	B, D, F	S	P, R	ANG, DAL
RN^60@2913%&	291,000	1/8	C, N, R	H, J, K, C, E	B, D	S	P, R	ANG, DAL
RN^60@2943%&	294,000	1/8	C, N, R	H, J, K, C, E	B, D, F	S	P, R	ANG, DAL
	Resistance	Power	Term.	Char.	Res.	Level 1	Level 2	
Part Number	Value (Ohms)	Rating (W)	Type (^)	(@)	Tol. (%)	(FRL) (&)	(FRL) (&)	Manufacturer
RN^60@2983%&	298,000	1/8	C, N, R	H, J, K, C, E	B, D	S	P, R	ANG, DAL
RN^60@3013%&	301,000	1/8	C, N, R	H, J, K, C, E	B, D, F	S	P, R	ANG, DAL

RN^60@3053%&	305,000	1/8	C, N, R	H, J, K, C, E	B, D	S	P, R	ANG, DAL
RN^60@3093%&	309,000	1/8	C, N, R	H, J, K, C, E	B, D, F	S	P, R	ANG, DAL
RN^60@3123%&	312,000	1/8	C, N, R	H, J, K, C, E	B, D	S	P, R	ANG, DAL
RN^60@3163%&	316,000	1/8	C, N, R	H, J, K, C, E	B, D, F	S	P, R	ANG, DAL
RN^60@3203%&	320,000	1/8	C, N, R	H, J, K, C, E	B, D	S	P, R	ANG, DAL
	Resistance	Power	Term.	Char.	Res.	Level 1	Level 2	
Part Number	Value (Ohms)	Rating (W)	Type (^)	(@)	Tol. (%)	(FRL) (&)	(FRL) (&)	Manufacturer
RN^60@3243%&	324,000	1/8	C, N, R	H, J, K, C, E	B, D, F	S	P, R	ANG, DAL
RN^60@3283%&	328,000	1/8	C, N, R	H, J, K, C, E	B, D	S	P, R	ANG, DAL
RN^60@3323%&	332,000	1/8	C, N, R	H, J, K, C, E	B, D, F	S	P, R	ANG, DAL
RN^60@3363%&	336,000	1/8	C, N, R	H, J, K, C, E	B, D	S	P, R	ANG, DAL
RN^60@3403%&	340,000	1/8	C, N, R	H, J, K, C, E	B, D, F	S	P, R	ANG, DAL
RN^60@3443%&	344,000	1/8	C, N, R	H, J, K, C, E	B, D	S	P, R	ANG, DAL
RN^60@3483%&	348,000	1/8	C, N, R	H, J, K, C, E	B, D, F	S	P, R	ANG, DAL
	Resistance	Power	Term.	Char.	Res.	Level 1	Level 2	
Part Number	Value (Ohms)	Rating (W)	Type (^)	(@)	Tol. (%)	(FRL) (&)	(FRL) (&)	Manufacturer
RN^60@3523%&	352,000	1/8	C, N, R	H, J, K, C, E	B, D	S	P, R	ANG, DAL
RN^60@3573%&	357,000	1/8	C, N, R	H, J, K, C, E	B, D, F	S	P, R	ANG, DAL
RN^60@3613%&	361,000	1/8	C, N, R	H, J, K, C, E	B, D	S	P, R	ANG, DAL
RN^60@3653%&	365,000	1/8	C, N, R	H, J, K, C, E	B, D, F	S	P, R	ANG, DAL
RN^60@3703%&	370,000	1/8	C, N, R	H, J, K, C, E	B, D	S	P, R	ANG, DAL
RN^60@3743%&	374,000	1/8	C, N, R	H, J, K, C, E	B, D, F	S	P, R	ANG, DAL
RN^60@3793%&	379,000	1/8	C, N, R	H, J, K, C, E	B, D	S	P, R	ANG, DAL
	Resistance	Power	Term.	Char.	Res.	Level 1	Level 2	
Part Number	Value (Ohms)	Rating (W)	Type (^)	(@)	Tol. (%)	(FRL) (&)	(FRL) (&)	Manufacturer
RN^60@3833%&	383,000	1/8	C, N, R	H, J, K, C, E	B, D, F	S	P, R	ANG, DAL
RN^60@3883%&	388,000	1/8	C, N, R	H, J, K, C, E	B, D	S	P, R	ANG, DAL
RN^60@3923%&	392,000	1/8	C, N, R	H, J, K, C, E	B, D, F	S	P, R	ANG, DAL
RN^60@3973%&	397,000	1/8	C, N, R	H, J, K, C, E	B, D	S	P, R	ANG, DAL
RN^60@4023%&	402,000	1/8	C, N, R	H, J, K, C, E	B, D, F	S	P, R	ANG, DAL
RN^60@4073%&	407,000	1/8	C, N, R	H, J, K, C, E	B, D	S	P, R	ANG, DAL
RN^60@4123%&	412,000	1/8	C, N, R	H, J, K, C, E	B, D, F	S	P, R	ANG, DAL
	Resistance	Power	Term.	Char.	Res.	Level 1	Level 2	
Part Number	Value (Ohms)	Rating (W)	Type (^)	(@)	Tol. (%)	(FRL) (&)	(FRL) (&)	Manufacturer
RN^60@4173%&	417,000	1/8	C, N, R	H, J, K, C, E	B, D	S	P, R	ANG, DAL
RN^60@4223%&	422,000	1/8	C, N, R	H, J, K, C, E	B, D, F	S	P, R	ANG, DAL
RN^60@4273%&	427,000	1/8	C, N, R	H, J, K, C, E	B, D	S	P, R	ANG, DAL
RN^60@4323%&	432,000	1/8	C, N, R	H, J, K, C, E	B, D, F	S	P, R	ANG, DAL
RN^60@4373%&	437,000	1/8	C, N, R	H, J, K, C, E	B, D	S	P, R	ANG, DAL
RN^60@4423%&	442,000	1/8	C, N, R	H, J, K, C, E	B, D, F	S	P, R	ANG, DAL
RN^60@4483%&	448,000	1/8	C, N, R	H, J, K, C, E	B, D	S	P, R	ANG, DAL
	Resistance	Power	Term.	Char.	Res.	Level 1	Level 2	
Part Number	Value (Ohms)	Rating (W)	Type (^)	(@)	Tol. (%)	(FRL) (&)	(FRL) (&)	Manufacturer
RN^60@4533%&	453,000	1/8	C, N, R	H, J, K, C, E	B, D, F	S	P, R	ANG, DAL
RN^60@4593%&	459,000	1/8	C, N, R	H, J, K, C, E	B, D	S	P, R	ANG, DAL
RN^60@4643%&	464,000	1/8	C, N, R	H, J, K, C, E	B, D, F	S	P, R	ANG, DAL
RN^60@4703%&	470,000	1/8	C, N, R	H, J, K, C, E	B, D	S	P, R	ANG, DAL

RN^60@4753%&	475,000	1/8	C, N, R	H, J, K, C, E	B, D, F	S	P, R	ANG, DAL
RN^60@4813%&	481,000	1/8	C, N, R	H, J, K, C, E	B, D	S	P, R	ANG, DAL
RN^60@4873%&	487,000	1/8	C, N, R	H, J, K, C, E	B, D, F	S	P, R	ANG, DAL
	Resistance	Power	Term.	Char.	Res.	Level 1	Level 2	
Part Number	Value (Ohms)	Rating (W)	Type (^)	(@)	Tol. (%)	(FRL) (&)	(FRL) (&)	Manufacturer
RN^60@4933%&	493,000	1/8	C, N, R	H, J, K, C, E	B, D	S	P, R	ANG, DAL
RN^60@4993%&	499,000	1/8	C, N, R	H, J, K, C, E	B, D, F	S	P, R	ANG, DAL
RN^60@5053%&	505,000	1/8	C, N, R	H, J, K, C, E	B, D	S	P, R	ANG, DAL
RN^60@5113%&	511,000	1/8	C, N, R	H, J, K, C, E	B, D, F	S	P, R	ANG, DAL
RN^60@5173%&	517,000	1/8	C, N, R	H, J, K, C, E	B, D	S	P, R	ANG, DAL
RN^60@5233%&	523,000	1/8	C, N, R	H, J, K, C, E	B, D, F	S	P, R	ANG, DAL
RN^60@5303%&	530,000	1/8	C, N, R	H, J, K, C, E	B, D	S	P, R	ANG, DAL
	Resistance	Power	Term.	Char.	Res.	Level 1	Level 2	
Part Number	Value (Ohms)	Rating (W)	Type (^)	(@)	Tol. (%)	(FRL) (&)	(FRL) (&)	Manufacturer
RN^60@5363%&	536,000	1/8	C, N, R	H, J, K, C, E	B, D, F	S	P, R	ANG, DAL
RN^60@5423%&	542,000	1/8	C, N, R	H, J, K, C, E	B, D	S	P, R	ANG, DAL
RN^60@5493%&	549,000	1/8	C, N, R	H, J, K, C, E	B, D, F	S	P, R	ANG, DAL
RN^60@5563%&	556,000	1/8	C, N, R	H, J, K, C, E	B, D	S	P, R	ANG, DAL
RN^60@5623%&	562,000	1/8	C, N, R	H, J, K, C, E	B, D, F	S	P, R	ANG, DAL
RN^60@5693%&	569,000	1/8	C, N, R	H, J, K, C, E	B, D	S	P, R	ANG, DAL
RN^60@5763%&	576,000	1/8	C, N, R	H, J, K, C, E	B, D, F	S	P, R	ANG, DAL
	Resistance	Power	Term.	Char.	Res.	Level 1	Level 2	
Part Number	Value (Ohms)	Rating (W)	Type (^)	(@)	Tol. (%)	(FRL) (&)	(FRL) (&)	Manufacturer
RN^60@5833%&	583,000	1/8	C, N, R	H, J, K, C, E	B, D	S	P, R	ANG, DAL
RN^60@5903%&	590,000	1/8	C, N, R	H, J, K, C, E	B, D, F	S	P, R	ANG, DAL
RN^60@5973%&	597,000	1/8	C, N, R	H, J, K, C, E	B, D	S	P, R	ANG, DAL
RN^60@6043%&	604,000	1/8	C, N, R	H, J, K, C, E	B, D, F	S	P, R	ANG, DAL
RN^60@6123%&	612,000	1/8	C, N, R	H, J, K, C, E	B, D	S	P, R	ANG, DAL
RN^60@6193%&	619,000	1/8	C, N, R	H, J, K, C, E	B, D, F	S	P, R	ANG, DAL
RN^60@6263%&	626,000	1/8	C, N, R	H, J, K, C, E	B, D	S	P, R	ANG, DAL
	Resistance	Power	Term.	Char.	Res.	Level 1	Level 2	
Part Number	Value (Ohms)	Rating (W)	Type (^)	(@)	Tol. (%)	(FRL) (&)	(FRL) (&)	Manufacturer
RN^60@6343%&	634,000	1/8	C, N, R	H, J, K, C, E	B, D, F	S	P, R	ANG, DAL
RN^60@6423%&	642,000	1/8	C, N, R	H, J, K, C, E	B, D	S	P, R	ANG, DAL
RN^60@6493%&	649,000	1/8	C, N, R	H, J, K, C, E	B, D, F	S	P, R	ANG, DAL
RN^60@6573%&	657,000	1/8	C, N, R	H, J, K, C, E	B, D	S	P, R	ANG, DAL
RN^60@6653%&	665,000	1/8	C, N, R	H, J, K, C, E	B, D, F	S	P, R	ANG, DAL
RN^60@6733%&	673,000	1/8	C, N, R	H, J, K, C, E	B, D	S	P, R	ANG, DAL
RN^60@6813%&	681,000	1/8	C, N, R	H, J, K, C, E	B, D, F	S	P, R	ANG, DAL
	Resistance	Power	Term.	Char.	Res.	Level 1	Level 2	
Part Number	Value (Ohms)	Rating (W)	Type (^)	(@)	Tol. (%)	(FRL) (&)	(FRL) (&)	Manufacturer
RN^60@6903%&	690,000	1/8	C, N, R	H, J, K, C, E	B, D	S	P, R	ANG, DAL
RN^60@6983%&	698,000	1/8	C, N, R	H, J, K, C, E	B, D, F	S	P, R	ANG, DAL
RN^60@7063%&	706,000	1/8	C, N, R	H, J, K, C, E	B, D	S	P, R	ANG, DAL
RN^60@7153%&	715,000	1/8	C, N, R	H, J, K, C, E	B, D, F	S	P, R	ANG, DAL
RN^60@7233%&	723,000	1/8	C, N, R	H, J, K, C, E	B, D	S	P, R	ANG, DAL
RN^60@7323%&	732,000	1/8	C, N, R	H, J, K, C, E	B, D, F	S	P, R	ANG, DAL

RN^60@7413%&	741,000	1/8	C, N, R	H, J, K, C, E	B, D	S	P, R	ANG, DAL
	Resistance	Power	Term.	Char.	Res.	Level 1	Level 2	
Part Number	Value (Ohms)	Rating (W)	Type (^)	(@)	Tol. (%)	(FRL) (&)	(FRL) (&)	Manufacturer
RN^60@7503%&	750,000	1/8	C, N, R	H, J, K, C, E	B, D, F	S	P, R	ANG, DAL
RN^60@7593%&	759,000	1/8	C, N, R	H, J, K, C, E	B, D	S	P, R	ANG, DAL
RN^60@7683%&	768,000	1/8	C, N, R	H, J, K, C, E	B, D, F	S	P, R	ANG, DAL
RN^60@7773%&	777,000	1/8	C, N, R	H, J, K, C, E	B, D	S	P, R	ANG, DAL
RN^60@7873%&	787,000	1/8	C, N, R	H, J, K, C, E	B, D, F	S	P, R	ANG, DAL
RN^60@7963%&	796,000	1/8	C, N, R	H, J, K, C, E	B, D	S	P, R	ANG, DAL
RN^60@8063%&	806,000	1/8	C, N, R	H, J, K, C, E	B, D, F	S	P, R	ANG, DAL
	Resistance	Power	Term.	Char.	Res.	Level 1	Level 2	
Part Number	Value (Ohms)	Rating (W)	Type (^)	(@)	Tol. (%)	(FRL) (&)	(FRL) (&)	Manufacturer
RN^60@8163%&	816,000	1/8	C, N, R	H, J, K, C, E	B, D	S	P, R	ANG, DAL
RN^60@8253%&	825,000	1/8	C, N, R	H, J, K, C, E	B, D, F	S	P, R	ANG, DAL
RN^60@8353%&	835,000	1/8	C, N, R	H, J, K, C, E	B, D	S	P, R	ANG, DAL
RN^60@8453%&	845,000	1/8	C, N, R	H, J, K, C, E	B, D, F	S	P, R	ANG, DAL
RN^60@8563%&	856,000	1/8	C, N, R	H, J, K, C, E	B, D	S	P, R	ANG, DAL
RN^60@8663%&	866,000	1/8	C, N, R	H, J, K, C, E	B, D, F	S	P, R	ANG, DAL
RN^60@8763%&	876,000	1/8	C, N, R	H, J, K, C, E	B, D	S	P, R	ANG, DAL
	Resistance	Power	Term.	Char.	Res.	Level 1	Level 2	
Part Number	Value (Ohms)	Rating (W)	Type (^)	(@)	Tol. (%)	(FRL) (&)	(FRL) (&)	Manufacturer
RN^60@8873%&	887,000	1/8	C, N, R	H, J, K, C, E	B, D, F	S	P, R	ANG, DAL
RN^60@8983%&	898,000	1/8	C, N, R	H, J, K, C, E	B, D	S	P, R	ANG, DAL
RN^60@9093%&	909,000	1/8	C, N, R	H, J, K, C, E	B, D, F	S	P, R	ANG, DAL
RN^60@9203%&	920,000	1/8	C, N, R	H, J, K, C, E	B, D	S	P, R	ANG, DAL
RN^60@9313%&	931,000	1/8	C, N, R	H, J, K, C, E	B, D, F	S	P, R	ANG, DAL
RN^60@9423%&	942,000	1/8	C, N, R	H, J, K, C, E	B, D	S	P, R	ANG, DAL
RN^60@9533%&	953,000	1/8	C, N, R	H, J, K, C, E	B, D, F	S	P, R	ANG, DAL
	Resistance	Power	Term.	Char.	Res.	Level 1	Level 2	
Part Number	Value (Ohms)	Rating (W)	Type (^)	(@)	Tol. (%)	(FRL) (&)	(FRL) (&)	Manufacturer
RN^60@9653%&	965,000	1/8	C, N, R	H, J, K, C, E	B, D	S	P, R	ANG, DAL
RN^60@9763%&	976,000	1/8	C, N, R	H, J, K, C, E	B, D, F	S	P, R	ANG, DAL
RN^60@9883%&	988,000	1/8	C, N, R	H, J, K, C, E	B, D	S	P, R	ANG, DAL

RN^60 Film Resistors: 1,000,000 Ohms through 2,490,000 Ohms

	Resistance	Power	Term.	Char.	Res.	Level 1	Level 2	
Part Number	Value (Ohms)	Rating (W)	Type (^)	(@)	Tol. (%)	(FRL) (&)	(FRL) (&)	Manufacturer
RN^60@1004%&	1,000,000	1/8	C, N, R	H, J, K, C, E	B, D, F	S	P, R	ANG, DAL
RN^60@1014%&	1,010,000	1/8	C, N, R	H, J, K, C, E	B, D	S	P, R	ANG, DAL
RN^60@1024%&	1,020,000	1/8	C, N, R	H, J, K, C, E	B, D, F	S	P, R	ANG, DAL
RN^60@1044%&	1,040,000	1/8	C, N, R	H, J, K, C, E	B, D	S	P, R	ANG, DAL
RN^60@1054%&	1,050,000	1/8	C, N, R	H, J, K, C, E	B, D, F	S	P, R	ANG, DAL
RN^60@1064%&	1,060,000	1/8	C, N, R	H, J, K, C, E	B, D	S	P, R	ANG, DAL
RN^60@1074%&	1,070,000	1/8	C, N, R	H, J, K, C, E	B, D, F	S	P, R	ANG, DAL

	Resistance	Power	Term.	Char.	Res.	Level 1	Level 2	
Part Number	Value (Ohms)	Rating (W)	Type (^)	(@)	Tol. (%)	(FRL) (&)	(FRL) (&)	Manufacturer
RN^60@1094%&	1,090,000	1/8	C, N, R	H, J, K, C, E	B, D	S	P, R	ANG, DAL
RN^60@1104%&	1,100,000	1/8	C, N, R	H, J, K, C, E	B, D, F	S	P, R	ANG, DAL
RN^60@1114%&	1,110,000	1/8	C, N, R	H, J, K, C, E	B, D	S	P, R	ANG, DAL
RN^60@1134%&	1,130,000	1/8	C, N, R	H, J, K, C, E	B, D, F	S	P, R	ANG, DAL
RN^60@1144%&	1,140,000	1/8	C, N, R	H, J, K, C, E	B, D	S	P, R	ANG, DAL
RN^60@1154%&	1,150,000	1/8	C, N, R	H, J, K, C, E	B, D, F	S	P, R	ANG, DAL
RN^60@1174%&	1,170,000	1/8	C, N, R	H, J, K, C, E	B, D	S	P, R	ANG, DAL
	Resistance	Power	Term.	Char.	Res.	Level 1	Level 2	
Part Number	Value (Ohms)	Rating (W)	Type (^)	(@)	Tol. (%)	(FRL) (&)	(FRL) (&)	Manufacturer
RN^60@1184%&	1,180,000	1/8	C, N, R	H, J, K, C, E	B, D, F	S	P, R	ANG, DAL
RN^60@1204%&	1,200,000	1/8	C, N, R	H, J, K, C, E	B, D	S	P, R	ANG, DAL
RN^60@1214%&	1,210,000	1/8	C, N, R	H, J, K, C, E	B, D, F	S	P, R	ANG, DAL
RN^60@1234%&	1,230,000	1/8	C, N, R	H, J, K, C, E	B, D	S	P, R	ANG, DAL
RN^60@1244%&	1,240,000	1/8	C, N, R	H, J, K, C, E	B, D, F	S	P, R	ANG, DAL
RN^60@1264%&	1,260,000	1/8	C, N, R	H, J, K, C, E	B, D	S	P, R	ANG, DAL
RN^60@1274%&	1,270,000	1/8	C, N, R	H, J, K, C, E	B, D, F	S	P, R	ANG, DAL
	Resistance	Power	Term.	Char.	Res.	Level 1	Level 2	
Part Number	Value (Ohms)	Rating (W)	Type (^)	(@)	Tol. (%)	(FRL) (&)	(FRL) (&)	Manufacturer
RN^60@1294%&	1,290,000	1/8	C, N, R	H, J, K, C, E	B, D	S	P, R	ANG, DAL
RN^60@1304%&	1,300,000	1/8	C, N, R	H, J, K, C, E	B, D, F	S	P, R	ANG, DAL
RN^60@1324%&	1,320,000	1/8	C, N, R	H, J, K, C, E	B, D	S	P, R	ANG, DAL
RN^60@1334%&	1,330,000	1/8	C, N, R	H, J, K, C, E	B, D, F	S	P, R	ANG, DAL
RN^60@1354%&	1,350,000	1/8	C, N, R	H, J, K, C, E	B, D	S	P, R	ANG, DAL
RN^60@1374%&	1,370,000	1/8	C, N, R	H, J, K, C, E	B, D, F	S	P, R	ANG, DAL
RN^60@1384%&	1,380,000	1/8	C, N, R	H, J, K, C, E	B, D	S	P, R	ANG, DAL
	Resistance	Power	Term.	Char.	Res.	Level 1	Level 2	
Part Number	Value (Ohms)	Rating (W)	Type (^)	(@)	Tol. (%)	(FRL) (&)	(FRL) (&)	Manufacturer
RN^60@1404%&	1,400,000	1/8	C, N, R	H, J, K, C, E	B, D, F	S	P, R	ANG, DAL
RN^60@1424%&	1,420,000	1/8	C, N, R	H, J, K, C, E	B, D	S	P, R	ANG, DAL
RN^60@1434%&	1,430,000	1/8	C, N, R	H, J, K, C, E	B, D, F	S	P, R	ANG, DAL
RN^60@1454%&	1,450,000	1/8	C, N, R	H, J, K, C, E	B, D	S	P, R	ANG, DAL
RN^60@1474%&	1,470,000	1/8	C, N, R	H, J, K, C, E	B, D, F	S	P, R	ANG, DAL
RN^60@1494%&	1,490,000	1/8	C, N, R	H, J, K, C, E	B, D	S	P, R	ANG, DAL
RN^60@1504%&	1,500,000	1/8	C, N, R	H, J, K, C, E	B, D, F	S	P, R	ANG, DAL
	Resistance	Power	Term.	Char.	Res.	Level 1	Level 2	
Part Number	Value (Ohms)	Rating (W)	Type (^)	(@)	Tol. (%)	(FRL) (&)	(FRL) (&)	Manufacturer
RN^60@1524%&	1,520,000	1/8	C, N, R	H, J, K, C, E	B, D	S	P, R	ANG, DAL
RN^60@1544%&	1,540,000	1/8	C, N, R	H, J, K, C, E	B, D, F	S	P, R	ANG, DAL
RN^60@1564%&	1,560,000	1/8	C, N, R	H, J, K, C, E	B, D	S	P, R	ANG, DAL
RN^60@1584%&	1,580,000	1/8	C, N, R	H, J, K, C, E	B, D, F	S	P, R	ANG, DAL
RN^60@1604%&	1,600,000	1/8	C, N, R	H, J, K, C, E	B, D	S	P, R	ANG, DAL
RN^60@1624%&	1,620,000	1/8	C, N, R	H, J, K, C, E	B, D, F	S	P, R	ANG, DAL
RN^60@1644%&	1,640,000	1/8	C, N, R	H, J, K, C, E	B, D	S	P, R	ANG, DAL
	Resistance	Power	Term.	Char.	Res.	Level 1	Level 2	
Part Number	Value (Ohms)	Rating (W)	Type (^)	(@)	Tol. (%)	(FRL) (&)	(FRL) (&)	Manufacturer

RN^60@1654%&	1,650,000	1/8	C, N, R	H, J, K, C, E	B, D, F	S	P, R	ANG, DAL
RN^60@1674%&	1,670,000	1/8	C, N, R	H, J, K, C, E	B, D	S	P, R	ANG, DAL
RN^60@1694%&	1,690,000	1/8	C, N, R	H, J, K, C, E	B, D, F	S	P, R	ANG, DAL
RN^60@1724%&	1,720,000	1/8	C, N, R	H, J, K, C, E	B, D	S	P, R	ANG, DAL
RN^60@1744%&	1,740,000	1/8	C, N, R	H, J, K, C, E	B, D, F	S	P, R	ANG, DAL
RN^60@1764%&	1,760,000	1/8	C, N, R	H, J, K, C, E	B, D	S	P, R	ANG, DAL
RN^60@1784%&	1,780,000	1/8	C, N, R	H, J, K, C, E	B, D, F	S	P, R	ANG, DAL
	Resistance	Power	Term.	Char.	Res.	Level 1	Level 2	
Part Number	Value (Ohms)	Rating (W)	Type (^)	(@)	Tol. (%)	(FRL) (&)	(FRL) (&)	Manufacturer
RN^60@1804%&	1,800,000	1/8	C, N, R	H, J, K, C, E	B, D	S	P, R	ANG, DAL
RN^60@1824%&	1,820,000	1/8	C, N, R	H, J, K, C, E	B, D, F	S	P, R	ANG, DAL
RN^60@1844%&	1,840,000	1/8	C, N, R	H, J, K, C, E	B, D	S	P, R	ANG, DAL
RN^60@1874%&	1,870,000	1/8	C, N, R	H, J, K, C, E	B, D, F	S	P, R	ANG, DAL
RN^60@1894%&	1,890,000	1/8	C, N, R	H, J, K, C, E	B, D	S	P, R	ANG, DAL
RN^60@1914%&	1,910,000	1/8	C, N, R	H, J, K, C, E	B, D, F	S	P, R	ANG, DAL
RN^60@1934%&	1,930,000	1/8	C, N, R	H, J, K, C, E	B, D	S	P, R	ANG, DAL
	Resistance	Power	Term.	Char.	Res.	Level 1	Level 2	
Part Number	Value (Ohms)	Rating (W)	Type (^)	(@)	Tol. (%)	(FRL) (&)	(FRL) (&)	Manufacturer
RN^60@1964%&	1,960,000	1/8	C, N, R	H, J, K, C, E	B, D, F	S	P, R	ANG, DAL
RN^60@1984%&	1,980,000	1/8	C, N, R	H, J, K, C, E	B, D	S	P, R	ANG, DAL
RN^60@2004%&	2,000,000	1/8	C, N, R	H, J, K, C, E	B, D, F	S	P, R	ANG, DAL
RN^60@2034%&	2,030,000	1/8	N, R	H, J, K, C, E	B, D	S	P, R	ANG
RN^60@2054%&	2,050,000	1/8	N, R	H, J, K, C, E	B, D, F	S	P, R	ANG
RN^60@2084%&	2,080,000	1/8	N, R	H, J, K, C, E	B, D	S	P, R	ANG
RN^60@2104%&	2,100,000	1/8	N, R	H, J, K, C, E	B, D, F	S	P, R	ANG
	Resistance	Power	Term.	Char.	Res.	Level 1	Level 2	
Part Number	Value (Ohms)	Rating (W)	Type (^)	(@)	Tol. (%)	(FRL) (&)	(FRL) (&)	Manufacturer
RN^60@2134%&	2,130,000	1/8	N, R	H, J, K, C, E	B, D	S	P, R	ANG
RN^60@2154%&	2,150,000	1/8	N, R	H, J, K, C, E	B, D, F	S	P, R	ANG
RN^60@2184%&	2,180,000	1/8	N, R	H, J, K, C, E	B, D	S	P, R	ANG
RN^60@2214%&	2,210,000	1/8	N, R	H, J, K, C, E	B, D, F	S	P, R	ANG
RN^60@2234%&	2,230,000	1/8	N, R	H, J, K, C, E	B, D	S	P, R	ANG
RN^60@2264%&	2,260,000	1/8	N, R	H, J, K, C, E	B, D, F	S	P, R	ANG
RN^60@2294%&	2,290,000	1/8	N, R	H, J, K, C, E	B, D	S	P, R	ANG
	Resistance	Power	Term.	Char.	Res.	Level 1	Level 2	
Part Number	Value (Ohms)	Rating (W)	Type (^)	(@)	Tol. (%)	(FRL) (&)	(FRL) (&)	Manufacturer
RN^60@2324%&	2,320,000	1/8	N, R	H, J, K, C, E	B, D, F	S	P, R	ANG
RN^60@2344%&	2,340,000	1/8	N, R	H, J, K, C, E	B, D	S	P, R	ANG
RN^60@2374%&	2,370,000	1/8	N, R	H, J, K, C, E	B, D, F	S	P, R	ANG
RN^60@2404%&	2,400,000	1/8	N, R	H, J, K, C, E	B, D	S	P, R	ANG
RN^60@2434%&	2,430,000	1/8	N, R	H, J, K, C, E	B, D, F	S	P, R	ANG
RN^60@2464%&	2,460,000	1/8	N, R	H, J, K, C, E	B, D	S	P, R	ANG
RN^60@2494%&	2,490,000	1/8	N, R	H, J, K, C, E	B, D, F	S	P, R	ANG
	Resistance	Power	Term.	Char.	Res.	Level 1	Level 2	
Part Number	Value (Ohms)	Rating (W)	Type (^)	(@)	Tol. (%)	(FRL) (&)	(FRL) (&)	Manufacturer
	Resistance	Power	Term.	Char.	Res.	Level 1	Level 2	
Part Number	Value (Ohms)	Rating (W)	Type (^)	(@)	Tol. (%)	(FRL) (&)	(FRL) (&)	Manufacturer

	Resistance	Power	Term.	Char.	Res.	Level 1	Level 2	
Part Number	Value (Ohms)	Rating (W)	Type (^)	(@)	Tol. (%)	(FRL) (&)	(FRL) (&)	Manufacturer
	Resistance	Power	Term.	Char.	Res.	Level 1	Level 2	
Part Number	Value (Ohms)	Rating (W)	Type (^)	(@)	Tol. (%)	(FRL) (&)	(FRL) (&)	Manufacturer
	Resistance	Power	Term.	Char.	Res.	Level 1	Level 2	
Part Number	Value (Ohms)	Rating (W)	Type (^)	(@)	Tol. (%)	(FRL) (&)	(FRL) (&)	Manufacturer
	Resistance	Power	Term.	Char.	Res.	Level 1	Level 2	
Part Number	Value (Ohms)	Rating (W)	Type (^)	(@)	Tol. (%)	(FRL) (&)	(FRL) (&)	Manufacturer
	Resistance	Power	Term.	Char.	Res.	Level 1	Level 2	
Part Number	Value (Ohms)	Rating (W)	Type (^)	(@)	Tol. (%)	(FRL) (&)	(FRL) (&)	Manufacturer
	Resistance	Power	Term.	Char.	Res.	Level 1	Level 2	
Part Number	Value (Ohms)	Rating (W)	Type (^)	(@)	Tol. (%)	(FRL) (&)	(FRL) (&)	Manufacturer
	Resistance	Power	Term.	Char.	Res.	Level 1	Level 2	
Part Number	Value (Ohms)	Rating (W)	Type (^)	(@)	Tol. (%)	(FRL) (&)	(FRL) (&)	Manufacturer
	Resistance	Power	Term.	Char.	Res.	Level 1	Level 2	
Part Number	Value (Ohms)	Rating (W)	Type (^)	(@)	Tol. (%)	(FRL) (&)	(FRL) (&)	Manufacturer
	Resistance	Power	Term.	Char.	Res.	Level 1	Level 2	
Part Number	Value (Ohms)	Rating (W)	Type (^)	(@)	Tol. (%)	(FRL) (&)	(FRL) (&)	Manufacturer
	Resistance	Power	Term.	Char.	Res.	Level 1	Level 2	
Part Number	Value (Ohms)	Rating (W)	Type (^)	(@)	Tol. (%)	(FRL) (&)	(FRL) (&)	Manufacturer
	Resistance	Power	Term.	Char.	Res.	Level 1	Level 2	
Part Number	Value (Ohms)	Rating (W)	Type (^)	(@)	Tol. (%)	(FRL) (&)	(FRL) (&)	Manufacturer
	Resistance	Power	Term.	Char.	Res.	Level 1	Level 2	
Part Number	Value (Ohms)	Rating (W)	Type (^)	(@)	Tol. (%)	(FRL) (&)	(FRL) (&)	Manufacturer
	Resistance	Power	Term.	Char.	Res.	Level 1	Level 2	
Part Number	Value (Ohms)	Rating (W)	Type (^)	(@)	Tol. (%)	(FRL) (&)	(FRL) (&)	Manufacturer
	Resistance	Power	Term.	Char.	Res.	Level 1	Level 2	
Part Number	Value (Ohms)	Rating (W)	Type (^)	(@)	Tol. (%)	(FRL) (&)	(FRL) (&)	Manufacturer
	Resistance	Power	Term.	Char.	Res.	Level 1	Level 2	
Part Number	Value (Ohms)	Rating (W)	Type (^)	(@)	Tol. (%)	(FRL) (&)	(FRL) (&)	Manufacturer
	Resistance	Power	Term.	Char.	Res.	Level 1	Level 2	
Part Number	Value (Ohms)	Rating (W)	Type (^)	(@)	Tol. (%)	(FRL) (&)	(FRL) (&)	Manufacturer

RN^65 Film Resistors

	Resistance	Power	Term.	Char.	Resistance	Level 1	Level 2	
Part Number	Value (Ohms)	Rating (W)	Type (^)	(@)	Tolerance (%)	(FRL) (&)	(FRL) (&)	Manufacturer
RN^65@10R0%&	10.0	1/4	C, R	H, J, K	B, D, F		P, R	DAL
RN^65@10R1%&	10.1	1/4	C, R	H, J, K	B, D		P, R	DAL
RN^65@10R2%&	10.2	1/4	C, R	H, J, K	B, D, F		P, R	DAL
RN^65@10R4%&	10.4	1/4	C, R	H, J, K	B, D		P, R	DAL
RN^65@10R5%&	10.5	1/4	C, R	H, J, K	B, D, F		P, R	DAL
RN^65@10R6%&	10.6	1/4	C, R	H, J, K	B, D		P, R	DAL
RN^65@10R7%&	10.7	1/4	C, R	H, J, K	B, D, F		P, R	DAL
RN^65@10R9%&	10.9	1/4	C, R	H, J, K	B, D		P, R	DAL
RN^65@11R0%&	11.0	1/4	C, R	H, J, K	B, D, F		P, R	DAL
RN^65@11R1%&	11.1	1/4	C, R	H, J, K	B, D		P, R	DAL

RN^65@11R3%&	11.3	1/4	C, R	H, J, K	B, D, F		P, R	DAL
RN^65@11R4%&	11.4	1/4	C, R	H, J, K	B, D		P, R	DAL
RN^65@11R5%&	11.5	1/4	C, R	H, J, K	B, D, F		P, R	DAL
RN^65@11R7%&	11.7	1/4	C, R	H, J, K	B, D		P, R	DAL
RN^65@11R8%&	11.8	1/4	C, R	H, J, K	B, D, F		P, R	DAL
RN^65@12R0%&	12.0	1/4	C, R	H, J, K	B, D		P, R	DAL
RN^65@12R1%&	12.1	1/4	C, R	H, J, K	B, D, F		P, R	DAL
RN^65@12R3%&	12.3	1/4	C, R	H, J, K	B, D		P, R	DAL
RN^65@12R4%&	12.4	1/4	C, R	H, J, K	B, D, F		P, R	DAL
RN^65@12R6%&	12.6	1/4	C, R	H, J, K	B, D		P, R	DAL
RN^65@12R7%&	12.7	1/4	C, R	H, J, K	B, D, F		P, R	DAL
RN^65@12R9%&	12.9	1/4	C, R	H, J, K	B, D		P, R	DAL
RN^65@13R0%&	13.0	1/4	C, R	H, J, K	B, D, F		P, R	DAL
RN^65@13R2%&	13.2	1/4	C, R	H, J, K	B, D		P, R	DAL
RN^65@13R3%&	13.3	1/4	C, R	H, J, K	B, D, F		P, R	DAL
RN^65@13R5%&	13.5	1/4	C, R	H, J, K	B, D		P, R	DAL
RN^65@13R7%&	13.7	1/4	C, R	H, J, K	B, D, F		P, R	DAL
RN^65@13R8%&	13.8	1/4	C, R	H, J, K	B, D		P, R	DAL
RN^65@14R0%&	14.0	1/4	C, R	H, J, K	B, D, F		P, R	DAL
RN^65@14R2%&	14.2	1/4	C, R	H, J, K	B, D		P, R	DAL
RN^65@14R3%&	14.3	1/4	C, R	H, J, K	B, D, F		P, R	DAL
RN^65@14R5%&	14.5	1/4	C, R	H, J, K	B, D		P, R	DAL
RN^65@14R7%&	14.7	1/4	C, R	H, J, K	B, D, F		P, R	DAL
RN^65@14R9%&	14.9	1/4	C, R	H, J, K	B, D		P, R	DAL
RN^65@15R0%&	15.0	1/4	C, R	H, J, K	B, D, F		P, R	DAL
RN^65@15R2%&	15.2	1/4	C, R	H, J, K	B, D		P, R	DAL
RN^65@15R4%&	15.4	1/4	C, R	H, J, K	B, D, F		P, R	DAL
RN^65@15R6%&	15.6	1/4	C, R	H, J, K	B, D		P, R	DAL
RN^65@15R8%&	15.8	1/4	C, R	H, J, K	B, D, F		P, R	DAL
RN^65@16R0%&	16.0	1/4	C, R	H, J, K	B, D		P, R	DAL
RN^65@16R2%&	16.2	1/4	C, R	H, J, K	B, D, F		P, R	DAL
RN^65@16R4%&	16.4	1/4	C, R	H, J, K	B, D		P, R	DAL
RN^65@16R5%&	16.5	1/4	C, R	H, J, K	B, D, F		P, R	DAL
RN^65@16R7%&	16.7	1/4	C, R	H, J, K	B, D		P, R	DAL
RN^65@16R9%&	16.9	1/4	C, R	H, J, K	B, D, F		P, R	DAL
RN^65@17R2%&	17.2	1/4	C, R	H, J, K	B, D		P, R	DAL
RN^65@17R4%&	17.4	1/4	C, R	H, J, K	B, D, F		P, R	DAL
RN^65@17R6%&	17.6	1/4	C, R	H, J, K	B, D		P, R	DAL
RN^65@17R8%&	17.8	1/4	C, R	H, J, K	B, D, F		P, R	DAL
RN^65@18R0%&	18.0	1/4	C, R	H, J, K	B, D		P, R	DAL
RN^65@18R2%&	18.2	1/4	C, R	H, J, K	B, D, F		P, R	DAL
RN^65@18R4%&	18.4	1/4	C, R	H, J, K	B, D		P, R	DAL
RN^65@18R7%&	18.7	1/4	C, R	H, J, K	B, D, F		P, R	DAL
RN^65@18R9%&	18.9	1/4	C, R	H, J, K	B, D		P, R	DAL
RN^65@19R1%&	19.1	1/4	C, R	H, J, K	B, D, F		P, R	DAL
RN^65@19R3%&	19.3	1/4	C, R	H, J, K	B, D		P, R	DAL
RN^65@19R6%&	19.6	1/4	C, R	H, J, K	B, D, F		P, R	DAL

RN^65@19R8%&	19.8	1/4	C, R	H, J, K	B, D		P, R	DAL
RN^65@20R0%&	20.0	1/4	C, R	H, J, K	B, D, F		P, R	DAL
RN^65@20R3%&	20.3	1/4	C, R	H, J, K	B, D		P, R	DAL
RN^65@20R5%&	20.5	1/4	C, R	H, J, K	B, D, F		P, R	DAL
RN^65@20R8%&	20.8	1/4	C, R	H, J, K	B, D		P, R	DAL
RN^65@21R0%&	21.0	1/4	C, R	H, J, K	B, D, F		P, R	DAL
RN^65@21R3%&	21.3	1/4	C, R	H, J, K	B, D		P, R	DAL
RN^65@21R5%&	21.5	1/4	C, R	H, J, K	B, D, F		P, R	DAL
RN^65@21R8%&	21.8	1/4	C, R	H, J, K	B, D		P, R	DAL
RN^65@22R1%&	22.1	1/4	C, R	H, J, K	B, D, F		P, R	DAL
RN^65@22R3%&	22.3	1/4	C, R	H, J, K	B, D		P, R	DAL
RN^65@22R6%&	22.6	1/4	C, R	H, J, K	B, D, F		P, R	DAL
RN^65@22R9%&	22.9	1/4	C, R	H, J, K	B, D		P, R	DAL
RN^65@23R2%&	23.2	1/4	C, R	H, J, K	B, D, F		P, R	DAL
RN^65@23R4%&	23.4	1/4	C, R	H, J, K	B, D		P, R	DAL
RN^65@23R7%&	23.7	1/4	C, R	H, J, K	B, D, F		P, R	DAL
RN^65@24R0%&	24.0	1/4	C, R	H, J, K	B, D		P, R	DAL
RN^65@24R3%&	24.3	1/4	C, R	H, J, K	B, D, F		P, R	DAL
RN^65@24R6%&	24.6	1/4	C, N, R	H, J, K, C, E	B, D		P, R	DAL
RN^65@24R9%&	24.9	1/4	C, N, R	H, J, K, C, E	B, D, F		P, R	ANG, DAL
RN^65@25R2%&	25.2	1/4	C, N, R	H, J, K, C, E	B, D		P, R	ANG, DAL
RN^65@25R5%&	25.5	1/4	C, N, R	H, J, K, C, E	B, D, F		P, R	ANG, DAL
RN^65@25R8%&	25.8	1/4	C, N, R	H, J, K, C, E	B, D		P, R	ANG, DAL
RN^65@26R1%&	26.1	1/4	C, N, R	H, J, K, C, E	B, D, F		P, R	ANG, DAL
RN^65@26R4%&	26.4	1/4	C, N, R	H, J, K, C, E	B, D		P, R	ANG, DAL
RN^65@26R7%&	26.7	1/4	C, N, R	H, J, K, C, E	B, D, F		P, R	ANG, DAL
RN^65@27R1%&	27.1	1/4	C, N, R	H, J, K, C, E	B, D		P, R	ANG, DAL
RN^65@27R4%&	27.4	1/4	C, N, R	H, J, K, C, E	B, D, F		P, R	ANG, DAL
RN^65@27R7%&	27.7	1/4	C, N, R	H, J, K, C, E	B, D		P, R	ANG, DAL
RN^65@28R0%&	28.0	1/4	C, N, R	H, J, K, C, E	B, D, F		P, R	ANG, DAL
RN^65@28R4%&	28.4	1/4	C, N, R	H, J, K, C, E	B, D		P, R	ANG, DAL
RN^65@28R7%&	28.7	1/4	C, N, R	H, J, K, C, E	B, D, F		P, R	ANG, DAL
RN^65@29R1%&	29.1	1/4	C, N, R	H, J, K, C, E	B, D		P, R	ANG, DAL
RN^65@29R4%&	29.4	1/4	C, N, R	H, J, K, C, E	B, D, F		P, R	ANG, DAL
RN^65@29R8%&	29.8	1/4	C, N, R	H, J, K, C, E	B, D		P, R	ANG, DAL
RN^65@30R1%&	30.1	1/4	C, N, R	H, J, K, C, E	B, D, F		P, R	ANG, DAL
RN^65@30R5%&	30.5	1/4	C, N, R	H, J, K, C, E	B, D		P, R	ANG, DAL
RN^65@30R9%&	30.9	1/4	C, N, R	H, J, K, C, E	B, D, F		P, R	ANG, DAL
RN^65@31R2%&	31.2	1/4	C, N, R	H, J, K, C, E	B, D		P, R	ANG, DAL
RN^65@31R6%&	31.6	1/4	C, N, R	H, J, K, C, E	B, D, F		P, R	ANG, DAL
RN^65@32R0%&	32.0	1/4	C, N, R	H, J, K, C, E	B, D		P, R	ANG, DAL
RN^65@32R4%&	32.4	1/4	C, N, R	H, J, K, C, E	B, D, F		P, R	ANG, DAL
RN^65@32R8%&	32.8	1/4	C, N, R	H, J, K, C, E	B, D		P, R	ANG, DAL
RN^65@33R2%&	33.2	1/4	C, N, R	H, J, K, C, E	B, D, F		P, R	ANG, DAL
RN^65@33R6%&	33.6	1/4	C, N, R	H, J, K, C, E	B, D		P, R	ANG, DAL
RN^65@34R0%&	34.0	1/4	C, N, R	H, J, K, C, E	B, D, F		P, R	ANG, DAL
RN^65@34R4%&	34.4	1/4	C, N, R	H, J, K, C, E	B, D		P, R	ANG, DAL

RN^65@34R8%&	34.8	1/4	C, N, R	H, J, K, C, E	B, D, F		P, R	ANG, DAL
RN^65@35R2%&	35.2	1/4	C, N, R	H, J, K, C, E	B, D		P, R	ANG, DAL
RN^65@35R7%&	35.7	1/4	C, N, R	H, J, K, C, E	B, D, F		P, R	ANG, DAL
RN^65@36R1%&	36.1	1/4	C, N, R	H, J, K, C, E	B, D		P, R	ANG, DAL
RN^65@36R5%&	36.5	1/4	C, N, R	H, J, K, C, E	B, D, F		P, R	ANG, DAL
RN^65@37R0%&	37.0	1/4	C, N, R	H, J, K, C, E	B, D		P, R	ANG, DAL
RN^65@37R4%&	37.4	1/4	C, N, R	H, J, K, C, E	B, D, F		P, R	ANG, DAL
RN^65@37R9%&	37.9	1/4	C, N, R	H, J, K, C, E	B, D		P, R	ANG, DAL
RN^65@38R3%&	38.3	1/4	C, N, R	H, J, K, C, E	B, D, F		P, R	ANG, DAL
RN^65@38R8%&	38.8	1/4	C, N, R	H, J, K, C, E	B, D		P, R	ANG, DAL
RN^65@39R2%&	39.2	1/4	C, N, R	H, J, K, C, E	B, D, F		P, R	ANG, DAL
RN^65@39R7%&	39.7	1/4	C, N, R	H, J, K, C, E	B, D		P, R	ANG, DAL
RN^65@40R2%&	40.2	1/4	C, N, R	H, J, K, C, E	B, D, F		P, R	ANG, DAL
RN^65@40R7%&	40.7	1/4	C, N, R	H, J, K, C, E	B, D		P, R	ANG, DAL
RN^65@41R2%&	41.2	1/4	C, N, R	H, J, K, C, E	B, D, F		P, R	ANG, DAL
RN^65@41R7%&	41.7	1/4	C, N, R	H, J, K, C, E	B, D		P, R	ANG, DAL
RN^65@42R2%&	42.2	1/4	C, N, R	H, J, K, C, E	B, D, F		P, R	ANG, DAL
RN^65@42R7%&	42.7	1/4	C, N, R	H, J, K, C, E	B, D		P, R	ANG, DAL
RN^65@43R2%&	43.2	1/4	C, N, R	H, J, K, C, E	B, D, F		P, R	ANG, DAL
RN^65@43R7%&	43.7	1/4	C, N, R	H, J, K, C, E	B, D		P, R	ANG, DAL
RN^65@44R2%&	44.2	1/4	C, N, R	H, J, K, C, E	B, D, F		P, R	ANG, DAL
RN^65@44R8%&	44.8	1/4	C, N, R	H, J, K, C, E	B, D		P, R	ANG, DAL
RN^65@45R3%&	45.3	1/4	C, N, R	H, J, K, C, E	B, D, F		P, R	ANG, DAL
RN^65@45R9%&	45.9	1/4	C, N, R	H, J, K, C, E	B, D		P, R	ANG, DAL
RN^65@46R4%&	46.4	1/4	C, N, R	H, J, K, C, E	B, D, F		P, R	ANG, DAL
RN^65@47R0%&	47.0	1/4	C, N, R	H, J, K, C, E	B, D		P, R	ANG, DAL
RN^65@47R5%&	47.5	1/4	C, N, R	H, J, K, C, E	B, D, F		P, R	ANG, DAL
RN^65@48R1%&	48.1	1/4	C, N, R	H, J, K, C, E	B, D		P, R	ANG, DAL
RN^65@48R7%&	48.7	1/4	C, N, R	H, J, K, C, E	B, D, F		P, R	ANG, DAL
RN^65@49R3%&	49.3	1/4	C, N, R	H, J, K, C, E	B, D		P, R	ANG, DAL
RN^65@49R9%&	49.9	1/4	C, N, R	H, J, K, C, E	B, D, F		P, R	ANG, DAL
RN^65@50R5%&	50.5	1/4	C, N, R	H, J, K, C, E	B, D		P, R	ANG, DAL
RN^65@51R1%&	51.1	1/4	C, N, R	H, J, K, C, E	B, D, F		P, R	ANG, DAL
RN^65@51R7%&	51.7	1/4	C, N, R	H, J, K, C, E	B, D		P, R	ANG, DAL
RN^65@52R3%&	52.3	1/4	C, N, R	H, J, K, C, E	B, D, F		P, R	ANG, DAL
RN^65@53R0%&	53.0	1/4	C, N, R	H, J, K, C, E	B, D		P, R	ANG, DAL
RN^65@53R6%&	53.6	1/4	C, N, R	H, J, K, C, E	B, D, F		P, R	ANG, DAL
RN^65@54R2%&	54.2	1/4	C, N, R	H, J, K, C, E	B, D		P, R	ANG, DAL
RN^65@54R9%&	54.9	1/4	C, N, R	H, J, K, C, E	B, D, F		P, R	ANG, DAL
RN^65@55R6%&	55.6	1/4	C, N, R	H, J, K, C, E	B, D		P, R	ANG, DAL
RN^65@56R2%&	56.2	1/4	C, N, R	H, J, K, C, E	B, D, F		P, R	ANG, DAL
RN^65@56R9%&	56.9	1/4	C, N, R	H, J, K, C, E	B, D		P, R	ANG, DAL
RN^65@57R6%&	57.6	1/4	C, N, R	H, J, K, C, E	B, D, F		P, R	ANG, DAL
RN^65@58R3%&	58.3	1/4	C, N, R	H, J, K, C, E	B, D		P, R	ANG, DAL
RN^65@59R0%&	59.0	1/4	C, N, R	H, J, K, C, E	B, D, F		P, R	ANG, DAL
RN^65@59R7%&	59.7	1/4	C, N, R	H, J, K, C, E	B, D		P, R	ANG, DAL
RN^65@60R4%&	60.4	1/4	C, N, R	H, J, K, C, E	B, D, F		P, R	ANG, DAL

RN^65@61R2%&	61.2	1/4	C, N, R	H, J, K, C, E	B, D		P, R	ANG, DAL
RN^65@61R9%&	61.9	1/4	C, N, R	H, J, K, C, E	B, D, F		P, R	ANG, DAL
RN^65@62R6%&	62.6	1/4	C, N, R	H, J, K, C, E	B, D		P, R	ANG, DAL
RN^65@63R4%&	63.4	1/4	C, N, R	H, J, K, C, E	B, D, F		P, R	ANG, DAL
RN^65@64R2%&	64.2	1/4	C, N, R	H, J, K, C, E	B, D		P, R	ANG, DAL
RN^65@64R9%&	64.9	1/4	C, N, R	H, J, K, C, E	B, D, F		P, R	ANG, DAL
RN^65@65R7%&	65.7	1/4	C, N, R	H, J, K, C, E	B, D		P, R	ANG, DAL
RN^65@66R5%&	66.5	1/4	C, N, R	H, J, K, C, E	B, D, F		P, R	ANG, DAL
RN^65@67R3%&	67.3	1/4	C, N, R	H, J, K, C, E	B, D		P, R	ANG, DAL
RN^65@68R1%&	68.1	1/4	C, N, R	H, J, K, C, E	B, D, F		P, R	ANG, DAL
RN^65@69R0%&	69.0	1/4	C, N, R	H, J, K, C, E	B, D		P, R	ANG, DAL
RN^65@69R8%&	69.8	1/4	C, N, R	H, J, K, C, E	B, D, F		P, R	ANG, DAL
RN^65@70R6%&	70.6	1/4	C, N, R	H, J, K, C, E	B, D		P, R	ANG, DAL
RN^65@71R5%&	71.5	1/4	C, N, R	H, J, K, C, E	B, D, F		P, R	ANG, DAL
RN^65@72R3%&	72.3	1/4	C, N, R	H, J, K, C, E	B, D		P, R	ANG, DAL
RN^65@73R2%&	73.2	1/4	C, N, R	H, J, K, C, E	B, D, F		P, R	ANG, DAL
RN^65@74R1%&	74.1	1/4	C, N, R	H, J, K, C, E	B, D		P, R	ANG, DAL
RN^65@75R0%&	75.0	1/4	C, N, R	H, J, K, C, E	B, D, F		P, R	ANG, DAL
RN^65@75R9%&	75.9	1/4	C, N, R	H, J, K, C, E	B, D		P, R	ANG, DAL
RN^65@76R8%&	76.8	1/4	C, N, R	H, J, K, C, E	B, D, F		P, R	ANG, DAL
RN^65@77R7%&	77.7	1/4	C, N, R	H, J, K, C, E	B, D		P, R	ANG, DAL
RN^65@78R7%&	78.7	1/4	C, N, R	H, J, K, C, E	B, D, F		P, R	ANG, DAL
RN^65@79R6%&	79.6	1/4	C, N, R	H, J, K, C, E	B, D		P, R	ANG, DAL
RN^65@80R6%&	80.6	1/4	C, N, R	H, J, K, C, E	B, D, F		P, R	ANG, DAL
RN^65@81R6%&	81.6	1/4	C, N, R	H, J, K, C, E	B, D		P, R	ANG, DAL
RN^65@82R5%&	82.5	1/4	C, N, R	H, J, K, C, E	B, D, F		P, R	ANG, DAL
RN^65@83R5%&	83.5	1/4	C, N, R	H, J, K, C, E	B, D		P, R	ANG, DAL
RN^65@84R5%&	84.5	1/4	C, N, R	H, J, K, C, E	B, D, F		P, R	ANG, DAL
RN^65@85R6%&	85.6	1/4	C, N, R	H, J, K, C, E	B, D		P, R	ANG, DAL
RN^65@86R6%&	86.6	1/4	C, N, R	H, J, K, C, E	B, D, F		P, R	ANG, DAL
RN^65@87R6%&	87.6	1/4	C, N, R	H, J, K, C, E	B, D		P, R	ANG, DAL
RN^65@88R7%&	88.7	1/4	C, N, R	H, J, K, C, E	B, D, F		P, R	ANG, DAL
RN^65@89R8%&	89.8	1/4	C, N, R	H, J, K, C, E	B, D		P, R	ANG, DAL
RN^65@90R9%&	90.9	1/4	C, N, R	H, J, K, C, E	B, D, F		P, R	ANG, DAL
RN^65@92R0%&	92.0	1/4	C, N, R	H, J, K, C, E	B, D		P, R	ANG, DAL
RN^65@93R1%&	93.1	1/4	C, N, R	H, J, K, C, E	B, D, F		P, R	ANG, DAL
RN^65@94R2%&	94.2	1/4	C, N, R	H, J, K, C, E	B, D		P, R	ANG, DAL
RN^65@95R3%&	95.3	1/4	C, N, R	H, J, K, C, E	B, D, F		P, R	ANG, DAL
RN^65@96R5%&	96.5	1/4	C, N, R	H, J, K, C, E	B, D		P, R	ANG, DAL
RN^65@97R6%&	97.6	1/4	C, N, R	H, J, K, C, E	B, D, F		P, R	ANG, DAL
RN^65@98R8%&	98.8	1/4	C, N, R	H, J, K, C, E	B, D		P, R	ANG, DAL
RN^65@1000%&	100	1/4	C, N, R	H, J, K, C, E	B, D, F		P, R	ANG, DAL
RN^65@1010%&	101	1/4	C, N, R	H, J, K, C, E	B, D		P, R	ANG, DAL
RN^65@1020%&	102	1/4	C, N, R	H, J, K, C, E	B, D, F		P, R	ANG, DAL
RN^65@1040%&	104	1/4	C, N, R	H, J, K, C, E	B, D		P, R	ANG, DAL
RN^65@1050%&	105	1/4	C, N, R	H, J, K, C, E	B, D, F		P, R	ANG, DAL
RN^65@1060%&	106	1/4	C, N, R	H, J, K, C, E	B, D		P, R	ANG, DAL

RN^65@1070%&	107	1/4	C, N, R	H, J, K, C, E	B, D, F		P, R	ANG, DAL
RN^65@1090%&	109	1/4	C, N, R	H, J, K, C, E	B, D		P, R	ANG, DAL
RN^65@1100%&	110	1/4	C, N, R	H, J, K, C, E	B, D, F		P, R	ANG, DAL
RN^65@1110%&	111	1/4	C, N, R	H, J, K, C, E	B, D		P, R	ANG, DAL
RN^65@1130%&	113	1/4	C, N, R	H, J, K, C, E	B, D, F		P, R	ANG, DAL
RN^65@1140%&	114	1/4	C, N, R	H, J, K, C, E	B, D		P, R	ANG, DAL
RN^65@1150%&	115	1/4	C, N, R	H, J, K, C, E	B, D, F		P, R	ANG, DAL
RN^65@1170%&	117	1/4	C, N, R	H, J, K, C, E	B, D		P, R	ANG, DAL
RN^65@1180%&	118	1/4	C, N, R	H, J, K, C, E	B, D, F		P, R	ANG, DAL
RN^65@1200%&	120	1/4	C, N, R	H, J, K, C, E	B, D		P, R	ANG, DAL
RN^65@1210%&	121	1/4	C, N, R	H, J, K, C, E	B, D, F		P, R	ANG, DAL
RN^65@1230%&	123	1/4	C, N, R	H, J, K, C, E	B, D		P, R	ANG, DAL
RN^65@1240%&	124	1/4	C, N, R	H, J, K, C, E	B, D, F		P, R	ANG, DAL
RN^65@1260%&	126	1/4	C, N, R	H, J, K, C, E	B, D		P, R	ANG, DAL
RN^65@1270%&	127	1/4	C, N, R	H, J, K, C, E	B, D, F		P, R	ANG, DAL
RN^65@1290%&	129	1/4	C, N, R	H, J, K, C, E	B, D		P, R	ANG, DAL
RN^65@1300%&	130	1/4	C, N, R	H, J, K, C, E	B, D, F		P, R	ANG, DAL
RN^65@1320%&	132	1/4	C, N, R	H, J, K, C, E	B, D		P, R	ANG, DAL
RN^65@1330%&	133	1/4	C, N, R	H, J, K, C, E	B, D, F		P, R	ANG, DAL
RN^65@1350%&	135	1/4	C, N, R	H, J, K, C, E	B, D		P, R	ANG, DAL
RN^65@1370%&	137	1/4	C, N, R	H, J, K, C, E	B, D, F		P, R	ANG, DAL
RN^65@1380%&	138	1/4	C, N, R	H, J, K, C, E	B, D		P, R	ANG, DAL
RN^65@1400%&	140	1/4	C, N, R	H, J, K, C, E	B, D, F		P, R	ANG, DAL
RN^65@1420%&	142	1/4	C, N, R	H, J, K, C, E	B, D		P, R	ANG, DAL
RN^65@1430%&	143	1/4	C, N, R	H, J, K, C, E	B, D, F		P, R	ANG, DAL
RN^65@1450%&	145	1/4	C, N, R	H, J, K, C, E	B, D		P, R	ANG, DAL
RN^65@1470%&	147	1/4	C, N, R	H, J, K, C, E	B, D, F		P, R	ANG, DAL
RN^65@1490%&	149	1/4	C, N, R	H, J, K, C, E	B, D		P, R	ANG, DAL
RN^65@1500%&	150	1/4	C, N, R	H, J, K, C, E	B, D, F		P, R	ANG, DAL
RN^65@1520%&	152	1/4	C, N, R	H, J, K, C, E	B, D		P, R	ANG, DAL
RN^65@1540%&	154	1/4	C, N, R	H, J, K, C, E	B, D, F		P, R	ANG, DAL
RN^65@1560%&	156	1/4	C, N, R	H, J, K, C, E	B, D		P, R	ANG, DAL
RN^65@1580%&	158	1/4	C, N, R	H, J, K, C, E	B, D, F		P, R	ANG, DAL
RN^65@1600%&	160	1/4	C, N, R	H, J, K, C, E	B, D		P, R	ANG, DAL
RN^65@1620%&	162	1/4	C, N, R	H, J, K, C, E	B, D, F		P, R	ANG, DAL
RN^65@1640%&	164	1/4	C, N, R	H, J, K, C, E	B, D		P, R	ANG, DAL
RN^65@1650%&	165	1/4	C, N, R	H, J, K, C, E	B, D, F		P, R	ANG, DAL
RN^65@1670%&	167	1/4	C, N, R	H, J, K, C, E	B, D		P, R	ANG, DAL
RN^65@1690%&	169	1/4	C, N, R	H, J, K, C, E	B, D, F		P, R	ANG, DAL
RN^65@1720%&	172	1/4	C, N, R	H, J, K, C, E	B, D		P, R	ANG, DAL
RN^65@1740%&	174	1/4	C, N, R	H, J, K, C, E	B, D, F		P, R	ANG, DAL
RN^65@1760%&	176	1/4	C, N, R	H, J, K, C, E	B, D		P, R	ANG, DAL
RN^65@1780%&	178	1/4	C, N, R	H, J, K, C, E	B, D, F		P, R	ANG, DAL
RN^65@1800%&	180	1/4	C, N, R	H, J, K, C, E	B, D		P, R	ANG, DAL
RN^65@1820%&	182	1/4	C, N, R	H, J, K, C, E	B, D, F		P, R	ANG, DAL
RN^65@1840%&	184	1/4	C, N, R	H, J, K, C, E	B, D		P, R	ANG, DAL
RN^65@1870%&	187	1/4	C, N, R	H, J, K, C, E	B, D, F		P, R	ANG, DAL

RN^65@1890%&	189	1/4	C, N, R	H, J, K, C, E	B, D		P, R	ANG, DAL
RN^65@1910%&	191	1/4	C, N, R	H, J, K, C, E	B, D, F		P, R	ANG, DAL
RN^65@1930%&	193	1/4	C, N, R	H, J, K, C, E	B, D		P, R	ANG, DAL
RN^65@1960%&	196	1/4	C, N, R	H, J, K, C, E	B, D, F		P, R	ANG, DAL
RN^65@1980%&	198	1/4	C, N, R	H, J, K, C, E	B, D		P, R	ANG, DAL
RN^65@2000%&	200	1/4	C, N, R	H, J, K, C, E	B, D, F	S	P, R	ANG,DAL
RN^65@2030%&	203	1/4	C, N, R	H, J, K, C, E	B, D	S	P, R	ANG,DAL
RN^65@2050%&	205	1/4	C, N, R	H, J, K, C, E	B, D, F	S	P, R	ANG,DAL
RN^65@2080%&	208	1/4	C, N, R	H, J, K, C, E	B, D	S	P, R	ANG,DAL
RN^65@2100%&	210	1/4	C, N, R	H, J, K, C, E	B, D, F	S	P, R	ANG,DAL
RN^65@2130%&	213	1/4	C, N, R	H, J, K, C, E	B, D	S	P, R	ANG,DAL
RN^65@2150%&	215	1/4	C, N, R	H, J, K, C, E	B, D, F	S	P, R	ANG,DAL
RN^65@2180%&	218	1/4	C, N, R	H, J, K, C, E	B, D	S	P, R	ANG,DAL
RN^65@2210%&	221	1/4	C, N, R	H, J, K, C, E	B, D, F	S	P, R	ANG,DAL
RN^65@2230%&	223	1/4	C, N, R	H, J, K, C, E	B, D	S	P, R	ANG,DAL
RN^65@2260%&	226	1/4	C, N, R	H, J, K, C, E	B, D, F	S	P, R	ANG,DAL
RN^65@2290%&	229	1/4	C, N, R	H, J, K, C, E	B, D	S	P, R	ANG,DAL
RN^65@2320%&	232	1/4	C, N, R	H, J, K, C, E	B, D, F	S	P, R	ANG,DAL
RN^65@2340%&	234	1/4	C, N, R	H, J, K, C, E	B, D	S	P, R	ANG,DAL
RN^65@2370%&	237	1/4	C, N, R	H, J, K, C, E	B, D, F	S	P, R	ANG,DAL
RN^65@2400%&	240	1/4	C, N, R	H, J, K, C, E	B, D	S	P, R	ANG,DAL
RN^65@2430%&	243	1/4	C, N, R	H, J, K, C, E	B, D, F	S	P, R	ANG,DAL
RN^65@2460%&	246	1/4	C, N, R	H, J, K, C, E	B, D	S	P, R	ANG,DAL
RN^65@2490%&	249	1/4	C, N, R	H, J, K, C, E	B, D, F	S	P, R	ANG,DAL
RN^65@2520%&	252	1/4	C, N, R	H, J, K, C, E	B, D	S	P, R	ANG,DAL
RN^65@2550%&	255	1/4	C, N, R	H, J, K, C, E	B, D, F	S	P, R	ANG,DAL
RN^65@2580%&	258	1/4	C, N, R	H, J, K, C, E	B, D	S	P, R	ANG,DAL
RN^65@2610%&	261	1/4	C, N, R	H, J, K, C, E	B, D, F	S	P, R	ANG,DAL
RN^65@2640%&	264	1/4	C, N, R	H, J, K, C, E	B, D	S	P, R	ANG,DAL
RN^65@2670%&	267	1/4	C, N, R	H, J, K, C, E	B, D, F	S	P, R	ANG,DAL
RN^65@2710%&	271	1/4	C, N, R	H, J, K, C, E	B, D	S	P, R	ANG,DAL
RN^65@2740%&	274	1/4	C, N, R	H, J, K, C, E	B, D, F	S	P, R	ANG,DAL
RN^65@2770%&	277	1/4	C, N, R	H, J, K, C, E	B, D	S	P, R	ANG,DAL
RN^65@2800%&	280	1/4	C, N, R	H, J, K, C, E	B, D, F	S	P, R	ANG,DAL
RN^65@2840%&	284	1/4	C, N, R	H, J, K, C, E	B, D	S	P, R	ANG,DAL
RN^65@2870%&	287	1/4	C, N, R	H, J, K, C, E	B, D, F	S	P, R	ANG,DAL
RN^65@2910%&	291	1/4	C, N, R	H, J, K, C, E	B, D	S	P, R	ANG,DAL
RN^65@2940%&	294	1/4	C, N, R	H, J, K, C, E	B, D, F	S	P, R	ANG,DAL
RN^65@2980%&	298	1/4	C, N, R	H, J, K, C, E	B, D	S	P, R	ANG,DAL
RN^65@3010%&	301	1/4	C, N, R	H, J, K, C, E	B, D, F	S	P, R	ANG,DAL
RN^65@3050%&	305	1/4	C, N, R	H, J, K, C, E	B, D	S	P, R	ANG,DAL
RN^65@3090%&	309	1/4	C, N, R	H, J, K, C, E	B, D, F	S	P, R	ANG,DAL
RN^65@3120%&	312	1/4	C, N, R	H, J, K, C, E	B, D	S	P, R	ANG,DAL
RN^65@3160%&	316	1/4	C, N, R	H, J, K, C, E	B, D, F	S	P, R	ANG,DAL
RN^65@3200%&	320	1/4	C, N, R	H, J, K, C, E	B, D	S	P, R	ANG,DAL
RN^65@3240%&	324	1/4	C, N, R	H, J, K, C, E	B, D, F	S	P, R	ANG,DAL
RN^65@3280%&	328	1/4	C, N, R	H, J, K, C, E	B, D	S	P, R	ANG,DAL

RN^65@3320%&	332	1/4	C, N, R	H, J, K, C, E	B, D, F	S	P, R	ANG,DAL
RN^65@3360%&	336	1/4	C, N, R	H, J, K, C, E	B, D	S	P, R	ANG,DAL
RN^65@3400%&	340	1/4	C, N, R	H, J, K, C, E	B, D, F	S	P, R	ANG,DAL
RN^65@3440%&	344	1/4	C, N, R	H, J, K, C, E	B, D	S	P, R	ANG,DAL
RN^65@3480%&	348	1/4	C, N, R	H, J, K, C, E	B, D, F	S	P, R	ANG,DAL
RN^65@3520%&	352	1/4	C, N, R	H, J, K, C, E	B, D	S	P, R	ANG,DAL
RN^65@3570%&	357	1/4	C, N, R	H, J, K, C, E	B, D, F	S	P, R	ANG,DAL
RN^65@3610%&	361	1/4	C, N, R	H, J, K, C, E	B, D	S	P, R	ANG,DAL
RN^65@3650%&	365	1/4	C, N, R	H, J, K, C, E	B, D, F	S	P, R	ANG,DAL
RN^65@3700%&	370	1/4	C, N, R	H, J, K, C, E	B, D	S	P, R	ANG,DAL
RN^65@3740%&	374	1/4	C, N, R	H, J, K, C, E	B, D, F	S	P, R	ANG,DAL
RN^65@3790%&	379	1/4	C, N, R	H, J, K, C, E	B, D	S	P, R	ANG,DAL
RN^65@3830%&	383	1/4	C, N, R	H, J, K, C, E	B, D, F	S	P, R	ANG,DAL
RN^65@3880%&	388	1/4	C, N, R	H, J, K, C, E	B, D	S	P, R	ANG,DAL
RN^65@3920%&	392	1/4	C, N, R	H, J, K, C, E	B, D, F	S	P, R	ANG,DAL
RN^65@3970%&	397	1/4	C, N, R	H, J, K, C, E	B, D	S	P, R	ANG,DAL
RN^65@4020%&	402	1/4	C, N, R	H, J, K, C, E	B, D, F	S	P, R	ANG,DAL
RN^65@4070%&	407	1/4	C, N, R	H, J, K, C, E	B, D	S	P, R	ANG,DAL
RN^65@4120%&	412	1/4	C, N, R	H, J, K, C, E	B, D, F	S	P, R	ANG,DAL
RN^65@4170%&	417	1/4	C, N, R	H, J, K, C, E	B, D	S	P, R	ANG,DAL
RN^65@4220%&	422	1/4	C, N, R	H, J, K, C, E	B, D, F	S	P, R	ANG,DAL
RN^65@4270%&	427	1/4	C, N, R	H, J, K, C, E	B, D	S	P, R	ANG,DAL
RN^65@4320%&	432	1/4	C, N, R	H, J, K, C, E	B, D, F	S	P, R	ANG,DAL
RN^65@4370%&	437	1/4	C, N, R	H, J, K, C, E	B, D	S	P, R	ANG,DAL
RN^65@4420%&	442	1/4	C, N, R	H, J, K, C, E	B, D, F	S	P, R	ANG,DAL
RN^65@4480%&	448	1/4	C, N, R	H, J, K, C, E	B, D	S	P, R	ANG,DAL
RN^65@4530%&	453	1/4	C, N, R	H, J, K, C, E	B, D, F	S	P, R	ANG,DAL
RN^65@4590%&	459	1/4	C, N, R	H, J, K, C, E	B, D	S	P, R	ANG,DAL
RN^65@4640%&	464	1/4	C, N, R	H, J, K, C, E	B, D, F	S	P, R	ANG,DAL
RN^65@4700%&	470	1/4	C, N, R	H, J, K, C, E	B, D	S	P, R	ANG,DAL
RN^65@4750%&	475	1/4	C, N, R	H, J, K, C, E	B, D, F	S	P, R	ANG,DAL
RN^65@4810%&	481	1/4	C, N, R	H, J, K, C, E	B, D	S	P, R	ANG,DAL
RN^65@4870%&	487	1/4	C, N, R	H, J, K, C, E	B, D, F	S	P, R	ANG,DAL
RN^65@4930%&	493	1/4	C, N, R	H, J, K, C, E	B, D	S	P, R	ANG,DAL
RN^65@4990%&	499	1/4	C, N, R	H, J, K, C, E	B, D, F	S	P, R	ANG,DAL
RN^65@5050%&	505	1/4	C, N, R	H, J, K, C, E	B, D	S	P, R	ANG,DAL
RN^65@5110%&	511	1/4	C, N, R	H, J, K, C, E	B, D, F	S	P, R	ANG,DAL
RN^65@5170%&	517	1/4	C, N, R	H, J, K, C, E	B, D	S	P, R	ANG,DAL
RN^65@5230%&	523	1/4	C, N, R	H, J, K, C, E	B, D, F	S	P, R	ANG,DAL
RN^65@5300%&	530	1/4	C, N, R	H, J, K, C, E	B, D	S	P, R	ANG,DAL
RN^65@5360%&	536	1/4	C, N, R	H, J, K, C, E	B, D, F	S	P, R	ANG,DAL
RN^65@5420%&	542	1/4	C, N, R	H, J, K, C, E	B, D	S	P, R	ANG,DAL
RN^65@5490%&	549	1/4	C, N, R	H, J, K, C, E	B, D, F	S	P, R	ANG,DAL
RN^65@5560%&	556	1/4	C, N, R	H, J, K, C, E	B, D	S	P, R	ANG,DAL
RN^65@5620%&	562	1/4	C, N, R	H, J, K, C, E	B, D, F	S	P, R	ANG,DAL
RN^65@5690%&	569	1/4	C, N, R	H, J, K, C, E	B, D	S	P, R	ANG,DAL
RN^65@5760%&	576	1/4	C, N, R	H, J, K, C, E	B, D, F	S	P, R	ANG,DAL

RN^65@5830%&	583	1/4	C, N, R	H, J, K, C, E	B, D	S	P, R	ANG,DAL
RN^65@5900%&	590	1/4	C, N, R	H, J, K, C, E	B, D, F	S	P, R	ANG,DAL
RN^65@5970%&	597	1/4	C, N, R	H, J, K, C, E	B, D	S	P, R	ANG,DAL
RN^65@6040%&	604	1/4	C, N, R	H, J, K, C, E	B, D, F	S	P, R	ANG,DAL
RN^65@6120%&	612	1/4	C, N, R	H, J, K, C, E	B, D	S	P, R	ANG,DAL
RN^65@6190%&	619	1/4	C, N, R	H, J, K, C, E	B, D, F	S	P, R	ANG,DAL
RN^65@6260%&	626	1/4	C, N, R	H, J, K, C, E	B, D	S	P, R	ANG,DAL
RN^65@6340%&	634	1/4	C, N, R	H, J, K, C, E	B, D, F	S	P, R	ANG,DAL
RN^65@6420%&	642	1/4	C, N, R	H, J, K, C, E	B, D	S	P, R	ANG,DAL
RN^65@6490%&	649	1/4	C, N, R	H, J, K, C, E	B, D, F	S	P, R	ANG,DAL
RN^65@6570%&	657	1/4	C, N, R	H, J, K, C, E	B, D	S	P, R	ANG,DAL
RN^65@6650%&	665	1/4	C, N, R	H, J, K, C, E	B, D, F	S	P, R	ANG,DAL
RN^65@6730%&	673	1/4	C, N, R	H, J, K, C, E	B, D	S	P, R	ANG,DAL
RN^65@6810%&	681	1/4	C, N, R	H, J, K, C, E	B, D, F	S	P, R	ANG,DAL
RN^65@6900%&	690	1/4	C, N, R	H, J, K, C, E	B, D	S	P, R	ANG,DAL
RN^65@6980%&	698	1/4	C, N, R	H, J, K, C, E	B, D, F	S	P, R	ANG,DAL
RN^65@7060%&	706	1/4	C, N, R	H, J, K, C, E	B, D	S	P, R	ANG,DAL
RN^65@7150%&	715	1/4	C, N, R	H, J, K, C, E	B, D, F	S	P, R	ANG,DAL
RN^65@7230%&	723	1/4	C, N, R	H, J, K, C, E	B, D	S	P, R	ANG,DAL
RN^65@7320%&	732	1/4	C, N, R	H, J, K, C, E	B, D, F	S	P, R	ANG,DAL
RN^65@7410%&	741	1/4	C, N, R	H, J, K, C, E	B, D	S	P, R	ANG,DAL
RN^65@7500%&	750	1/4	C, N, R	H, J, K, C, E	B, D, F	S	P, R	ANG,DAL
RN^65@7590%&	759	1/4	C, N, R	H, J, K, C, E	B, D	S	P, R	ANG,DAL
RN^65@7680%&	768	1/4	C, N, R	H, J, K, C, E	B, D, F	S	P, R	ANG,DAL
RN^65@7770%&	777	1/4	C, N, R	H, J, K, C, E	B, D	S	P, R	ANG,DAL
RN^65@7870%&	787	1/4	C, N, R	H, J, K, C, E	B, D, F	S	P, R	ANG,DAL
RN^65@7960%&	796	1/4	C, N, R	H, J, K, C, E	B, D	S	P, R	ANG,DAL
RN^65@8060%&	806	1/4	C, N, R	H, J, K, C, E	B, D, F	S	P, R	ANG,DAL
RN^65@8160%&	816	1/4	C, N, R	H, J, K, C, E	B, D	S	P, R	ANG,DAL
RN^65@8250%&	825	1/4	C, N, R	H, J, K, C, E	B, D, F	S	P, R	ANG,DAL
RN^65@8350%&	835	1/4	C, N, R	H, J, K, C, E	B, D	S	P, R	ANG,DAL
RN^65@8450%&	845	1/4	C, N, R	H, J, K, C, E	B, D, F	S	P, R	ANG,DAL
RN^65@8560%&	856	1/4	C, N, R	H, J, K, C, E	B, D	S	P, R	ANG,DAL
RN^65@8660%&	866	1/4	C, N, R	H, J, K, C, E	B, D, F	S	P, R	ANG,DAL
RN^65@8760%&	876	1/4	C, N, R	H, J, K, C, E	B, D	S	P, R	ANG,DAL
RN^65@8870%&	887	1/4	C, N, R	H, J, K, C, E	B, D, F	S	P, R	ANG,DAL
RN^65@8980%&	898	1/4	C, N, R	H, J, K, C, E	B, D	S	P, R	ANG,DAL
RN^65@9090%&	909	1/4	C, N, R	H, J, K, C, E	B, D, F	S	P, R	ANG,DAL
RN^65@9200%&	920	1/4	C, N, R	H, J, K, C, E	B, D	S	P, R	ANG,DAL
RN^65@9310%&	931	1/4	C, N, R	H, J, K, C, E	B, D, F	S	P, R	ANG,DAL
RN^65@9420%&	942	1/4	C, N, R	H, J, K, C, E	B, D	S	P, R	ANG,DAL
RN^65@9530%&	953	1/4	C, N, R	H, J, K, C, E	B, D, F	S	P, R	ANG,DAL
RN^65@9650%&	965	1/4	C, N, R	H, J, K, C, E	B, D	S	P, R	ANG,DAL
RN^65@9760%&	976	1/4	C, N, R	H, J, K, C, E	B, D, F	S	P, R	ANG,DAL
RN^65@9880%&	988	1/4	C, N, R	H, J, K, C, E	B, D	S	P, R	ANG,DAL
RN^65@1001%&	1,000	1/4	C, N, R	H, J, K, C, E	B, D, F	S	P, R	ANG,DAL
RN^65@1011%&	1,010	1/4	C, N, R	H, J, K, C, E	B, D	S	P, R	ANG,DAL

RN^65@1021%&	1,020	1/4	C, N, R	H, J, K, C, E	B, D, F	S	P, R	ANG,DAL
RN^65@1041%&	1,040	1/4	C, N, R	H, J, K, C, E	B, D	S	P, R	ANG,DAL
RN^65@1051%&	1,050	1/4	C, N, R	H, J, K, C, E	B, D, F	S	P, R	ANG,DAL
RN^65@1061%&	1,060	1/4	C, N, R	H, J, K, C, E	B, D	S	P, R	ANG,DAL
RN^65@1071%&	1,070	1/4	C, N, R	H, J, K, C, E	B, D, F	S	P, R	ANG,DAL
RN^65@1091%&	1,090	1/4	C, N, R	H, J, K, C, E	B, D	S	P, R	ANG,DAL
RN^65@1101%&	1,100	1/4	C, N, R	H, J, K, C, E	B, D, F	S	P, R	ANG,DAL
RN^65@1111%&	1,110	1/4	C, N, R	H, J, K, C, E	B, D	S	P, R	ANG,DAL
RN^65@1131%&	1,130	1/4	C, N, R	H, J, K, C, E	B, D, F	S	P, R	ANG,DAL
RN^65@1141%&	1,140	1/4	C, N, R	H, J, K, C, E	B, D	S	P, R	ANG,DAL
RN^65@1151%&	1,150	1/4	C, N, R	H, J, K, C, E	B, D, F	S	P, R	ANG,DAL
RN^65@1171%&	1,170	1/4	C, N, R	H, J, K, C, E	B, D	S	P, R	ANG,DAL
RN^65@1181%&	1,180	1/4	C, N, R	H, J, K, C, E	B, D, F	S	P, R	ANG,DAL
RN^65@1201%&	1,200	1/4	C, N, R	H, J, K, C, E	B, D	S	P, R	ANG,DAL
RN^65@1211%&	1,210	1/4	C, N, R	H, J, K, C, E	B, D, F	S	P, R	ANG,DAL
RN^65@1231%&	1,230	1/4	C, N, R	H, J, K, C, E	B, D	S	P, R	ANG,DAL
RN^65@1241%&	1,240	1/4	C, N, R	H, J, K, C, E	B, D, F	S	P, R	ANG,DAL
RN^65@1261%&	1,260	1/4	C, N, R	H, J, K, C, E	B, D	S	P, R	ANG,DAL
RN^65@1271%&	1,270	1/4	C, N, R	H, J, K, C, E	B, D, F	S	P, R	ANG,DAL
RN^65@1291%&	1,290	1/4	C, N, R	H, J, K, C, E	B, D	S	P, R	ANG,DAL
RN^65@1301%&	1,300	1/4	C, N, R	H, J, K, C, E	B, D, F	S	P, R	ANG,DAL
RN^65@1321%&	1,320	1/4	C, N, R	H, J, K, C, E	B, D	S	P, R	ANG,DAL
RN^65@1331%&	1,330	1/4	C, N, R	H, J, K, C, E	B, D, F	S	P, R	ANG,DAL
RN^65@1351%&	1,350	1/4	C, N, R	H, J, K, C, E	B, D	S	P, R	ANG,DAL
RN^65@1371%&	1,370	1/4	C, N, R	H, J, K, C, E	B, D, F	S	P, R	ANG,DAL
RN^65@1381%&	1,380	1/4	C, N, R	H, J, K, C, E	B, D	S	P, R	ANG,DAL
RN^65@1401%&	1,400	1/4	C, N, R	H, J, K, C, E	B, D, F	S	P, R	ANG,DAL
RN^65@1421%&	1,420	1/4	C, N, R	H, J, K, C, E	B, D	S	P, R	ANG,DAL
RN^65@1431%&	1,430	1/4	C, N, R	H, J, K, C, E	B, D, F	S	P, R	ANG,DAL
RN^65@1451%&	1,450	1/4	C, N, R	H, J, K, C, E	B, D	S	P, R	ANG,DAL
RN^65@1471%&	1,470	1/4	C, N, R	H, J, K, C, E	B, D, F	S	P, R	ANG,DAL
RN^65@1491%&	1,490	1/4	C, N, R	H, J, K, C, E	B, D	S	P, R	ANG,DAL
RN^65@1501%&	1,500	1/4	C, N, R	H, J, K, C, E	B, D, F	S	P, R	ANG,DAL
RN^65@1521%&	1,520	1/4	C, N, R	H, J, K, C, E	B, D	S	P, R	ANG,DAL
RN^65@1541%&	1,540	1/4	C, N, R	H, J, K, C, E	B, D, F	S	P, R	ANG,DAL
RN^65@1561%&	1,560	1/4	C, N, R	H, J, K, C, E	B, D	S	P, R	ANG,DAL
RN^65@1581%&	1,580	1/4	C, N, R	H, J, K, C, E	B, D, F	S	P, R	ANG,DAL
RN^65@1601%&	1,600	1/4	C, N, R	H, J, K, C, E	B, D	S	P, R	ANG,DAL
RN^65@1621%&	1,620	1/4	C, N, R	H, J, K, C, E	B, D, F	S	P, R	ANG,DAL
RN^65@1641%&	1,640	1/4	C, N, R	H, J, K, C, E	B, D	S	P, R	ANG,DAL
RN^65@1651%&	1,650	1/4	C, N, R	H, J, K, C, E	B, D, F	S	P, R	ANG,DAL
RN^65@1671%&	1,670	1/4	C, N, R	H, J, K, C, E	B, D	S	P, R	ANG,DAL
RN^65@1691%&	1,690	1/4	C, N, R	H, J, K, C, E	B, D, F	S	P, R	ANG,DAL
RN^65@1721%&	1,720	1/4	C, N, R	H, J, K, C, E	B, D	S	P, R	ANG,DAL
RN^65@1741%&	1,740	1/4	C, N, R	H, J, K, C, E	B, D, F	S	P, R	ANG,DAL
RN^65@1761%&	1,760	1/4	C, N, R	H, J, K, C, E	B, D	S	P, R	ANG,DAL
RN^65@1781%&	1,780	1/4	C, N, R	H, J, K, C, E	B, D, F	S	P, R	ANG,DAL

RN^65@1801%&	1,800	1/4	C, N, R	H, J, K, C, E	B, D	S	P, R	ANG,DAL
RN^65@1821%&	1,820	1/4	C, N, R	H, J, K, C, E	B, D, F	S	P, R	ANG,DAL
RN^65@1841%&	1,840	1/4	C, N, R	H, J, K, C, E	B, D	S	P, R	ANG,DAL
RN^65@1871%&	1,870	1/4	C, N, R	H, J, K, C, E	B, D, F	S	P, R	ANG,DAL
RN^65@1891%&	1,890	1/4	C, N, R	H, J, K, C, E	B, D	S	P, R	ANG,DAL
RN^65@1911%&	1,910	1/4	C, N, R	H, J, K, C, E	B, D, F	S	P, R	ANG,DAL
RN^65@1931%&	1,930	1/4	C, N, R	H, J, K, C, E	B, D	S	P, R	ANG,DAL
RN^65@1961%&	1,960	1/4	C, N, R	H, J, K, C, E	B, D, F	S	P, R	ANG,DAL
RN^65@1981%&	1,980	1/4	C, N, R	H, J, K, C, E	B, D	S	P, R	ANG,DAL
RN^65@2001%&	2,000	1/4	C, N, R	H, J, K, C, E	B, D, F	S	P, R	ANG,DAL
RN^65@2031%&	2,030	1/4	C, N, R	H, J, K, C, E	B, D	S	P, R	ANG,DAL
RN^65@2051%&	2,050	1/4	C, N, R	H, J, K, C, E	B, D, F	S	P, R	ANG,DAL
RN^65@2081%&	2,080	1/4	C, N, R	H, J, K, C, E	B, D	S	P, R	ANG,DAL
RN^65@2101%&	2,100	1/4	C, N, R	H, J, K, C, E	B, D, F	S	P, R	ANG,DAL
RN^65@2131%&	2,130	1/4	C, N, R	H, J, K, C, E	B, D	S	P, R	ANG,DAL
RN^65@2151%&	2,150	1/4	C, N, R	H, J, K, C, E	B, D, F	S	P, R	ANG,DAL
RN^65@2181%&	2,180	1/4	C, N, R	H, J, K, C, E	B, D	S	P, R	ANG,DAL
RN^65@2211%&	2,210	1/4	C, N, R	H, J, K, C, E	B, D, F	S	P, R	ANG,DAL
RN^65@2231%&	2,230	1/4	C, N, R	H, J, K, C, E	B, D	S	P, R	ANG,DAL
RN^65@2261%&	2,260	1/4	C, N, R	H, J, K, C, E	B, D, F	S	P, R	ANG,DAL
RN^65@2291%&	2,290	1/4	C, N, R	H, J, K, C, E	B, D	S	P, R	ANG,DAL
RN^65@2321%&	2,320	1/4	C, N, R	H, J, K, C, E	B, D, F	S	P, R	ANG,DAL
RN^65@2341%&	2,340	1/4	C, N, R	H, J, K, C, E	B, D	S	P, R	ANG,DAL
RN^65@2371%&	2,370	1/4	C, N, R	H, J, K, C, E	B, D, F	S	P, R	ANG,DAL
RN^65@2401%&	2,400	1/4	C, N, R	H, J, K, C, E	B, D	S	P, R	ANG,DAL
RN^65@2431%&	2,430	1/4	C, N, R	H, J, K, C, E	B, D, F	S	P, R	ANG,DAL
RN^65@2461%&	2,460	1/4	C, N, R	H, J, K, C, E	B, D	S	P, R	ANG,DAL
RN^65@2491%&	2,490	1/4	C, N, R	H, J, K, C, E	B, D, F	S	P, R	ANG,DAL
RN^65@2521%&	2,520	1/4	C, N, R	H, J, K, C, E	B, D	S	P, R	ANG,DAL
RN^65@2551%&	2,550	1/4	C, N, R	H, J, K, C, E	B, D, F	S	P, R	ANG,DAL
RN^65@2581%&	2,580	1/4	C, N, R	H, J, K, C, E	B, D	S	P, R	ANG,DAL
RN^65@2611%&	2,610	1/4	C, N, R	H, J, K, C, E	B, D, F	S	P, R	ANG,DAL
RN^65@2641%&	2,640	1/4	C, N, R	H, J, K, C, E	B, D	S	P, R	ANG,DAL
RN^65@2671%&	2,670	1/4	C, N, R	H, J, K, C, E	B, D, F	S	P, R	ANG,DAL
RN^65@2711%&	2,710	1/4	C, N, R	H, J, K, C, E	B, D	S	P, R	ANG,DAL
RN^65@2741%&	2,740	1/4	C, N, R	H, J, K, C, E	B, D, F	S	P, R	ANG,DAL
RN^65@2771%&	2,770	1/4	C, N, R	H, J, K, C, E	B, D	S	P, R	ANG,DAL
RN^65@2801%&	2,800	1/4	C, N, R	H, J, K, C, E	B, D, F	S	P, R	ANG,DAL
RN^65@2841%&	2,840	1/4	C, N, R	H, J, K, C, E	B, D	S	P, R	ANG,DAL
RN^65@2871%&	2,870	1/4	C, N, R	H, J, K, C, E	B, D, F	S	P, R	ANG,DAL
RN^65@2911%&	2,910	1/4	C, N, R	H, J, K, C, E	B, D	S	P, R	ANG,DAL
RN^65@2941%&	2,940	1/4	C, N, R	H, J, K, C, E	B, D, F	S	P, R	ANG,DAL
RN^65@2981%&	2,980	1/4	C, N, R	H, J, K, C, E	B, D	S	P, R	ANG,DAL
RN^65@3011%&	3,010	1/4	C, N, R	H, J, K, C, E	B, D, F	S	P, R	ANG,DAL
RN^65@3051%&	3,050	1/4	C, N, R	H, J, K, C, E	B, D	S	P, R	ANG,DAL
RN^65@3091%&	3,090	1/4	C, N, R	H, J, K, C, E	B, D, F	S	P, R	ANG,DAL
RN^65@3121%&	3,120	1/4	C, N, R	H, J, K, C, E	B, D	S	P, R	ANG,DAL

RN^65@3161%&	3,160	1/4	C, N, R	H, J, K, C, E	B, D, F	S	P, R	ANG,DAL
RN^65@3201%&	3,200	1/4	C, N, R	H, J, K, C, E	B, D	S	P, R	ANG,DAL
RN^65@3241%&	3,240	1/4	C, N, R	H, J, K, C, E	B, D, F	S	P, R	ANG,DAL
RN^65@3281%&	3,280	1/4	C, N, R	H, J, K, C, E	B, D	S	P, R	ANG,DAL
RN^65@3321%&	3,320	1/4	C, N, R	H, J, K, C, E	B, D, F	S	P, R	ANG,DAL
RN^65@3361%&	3,360	1/4	C, N, R	H, J, K, C, E	B, D	S	P, R	ANG,DAL
RN^65@3401%&	3,400	1/4	C, N, R	H, J, K, C, E	B, D, F	S	P, R	ANG,DAL
RN^65@3441%&	3,440	1/4	C, N, R	H, J, K, C, E	B, D	S	P, R	ANG,DAL
RN^65@3481%&	3,480	1/4	C, N, R	H, J, K, C, E	B, D, F	S	P, R	ANG,DAL
RN^65@3521%&	3,520	1/4	C, N, R	H, J, K, C, E	B, D	S	P, R	ANG,DAL
RN^65@3571%&	3,570	1/4	C, N, R	H, J, K, C, E	B, D, F	S	P, R	ANG,DAL
RN^65@3611%&	3,610	1/4	C, N, R	H, J, K, C, E	B, D	S	P, R	ANG,DAL
RN^65@3651%&	3,650	1/4	C, N, R	H, J, K, C, E	B, D, F	S	P, R	ANG,DAL
RN^65@3701%&	3,700	1/4	C, N, R	H, J, K, C, E	B, D	S	P, R	ANG,DAL
RN^65@3741%&	3,740	1/4	C, N, R	H, J, K, C, E	B, D, F	S	P, R	ANG,DAL
RN^65@3791%&	3,790	1/4	C, N, R	H, J, K, C, E	B, D	S	P, R	ANG,DAL
RN^65@3831%&	3,830	1/4	C, N, R	H, J, K, C, E	B, D, F	S	P, R	ANG,DAL
RN^65@3881%&	3,880	1/4	C, N, R	H, J, K, C, E	B, D	S	P, R	ANG,DAL
RN^65@3921%&	3,920	1/4	C, N, R	H, J, K, C, E	B, D, F	S	P, R	ANG,DAL
RN^65@3971%&	3,970	1/4	C, N, R	H, J, K, C, E	B, D	S	P, R	ANG,DAL
RN^65@4021%&	4,020	1/4	C, N, R	H, J, K, C, E	B, D, F	S	P, R	ANG,DAL
RN^65@4071%&	4,070	1/4	C, N, R	H, J, K, C, E	B, D	S	P, R	ANG,DAL
RN^65@4121%&	4,120	1/4	C, N, R	H, J, K, C, E	B, D, F	S	P, R	ANG,DAL
RN^65@4171%&	4,170	1/4	C, N, R	H, J, K, C, E	B, D	S	P, R	ANG,DAL
RN^65@4221%&	4,220	1/4	C, N, R	H, J, K, C, E	B, D, F	S	P, R	ANG,DAL
RN^65@4271%&	4,270	1/4	C, N, R	H, J, K, C, E	B, D	S	P, R	ANG,DAL
RN^65@4321%&	4,320	1/4	C, N, R	H, J, K, C, E	B, D, F	S	P, R	ANG,DAL
RN^65@4371%&	4,370	1/4	C, N, R	H, J, K, C, E	B, D	S	P, R	ANG,DAL
RN^65@4421%&	4,420	1/4	C, N, R	H, J, K, C, E	B, D, F	S	P, R	ANG,DAL
RN^65@4481%&	4,480	1/4	C, N, R	H, J, K, C, E	B, D	S	P, R	ANG,DAL
RN^65@4531%&	4,530	1/4	C, N, R	H, J, K, C, E	B, D, F	S	P, R	ANG,DAL
RN^65@4591%&	4,590	1/4	C, N, R	H, J, K, C, E	B, D	S	P, R	ANG,DAL
RN^65@4641%&	4,640	1/4	C, N, R	H, J, K, C, E	B, D, F	S	P, R	ANG,DAL
RN^65@4701%&	4,700	1/4	C, N, R	H, J, K, C, E	B, D	S	P, R	ANG,DAL
RN^65@4751%&	4,750	1/4	C, N, R	H, J, K, C, E	B, D, F	S	P, R	ANG,DAL
RN^65@4811%&	4,810	1/4	C, N, R	H, J, K, C, E	B, D	S	P, R	ANG,DAL
RN^65@4871%&	4,870	1/4	C, N, R	H, J, K, C, E	B, D, F	S	P, R	ANG,DAL
RN^65@4931%&	4,930	1/4	C, N, R	H, J, K, C, E	B, D	S	P, R	ANG,DAL
RN^65@4991%&	4,990	1/4	C, N, R	H, J, K, C, E	B, D, F	S	P, R	ANG,DAL
RN^65@5051%&	5,050	1/4	C, N, R	H, J, K, C, E	B, D	S	P, R	ANG,DAL
RN^65@5111%&	5,110	1/4	C, N, R	H, J, K, C, E	B, D, F	S	P, R	ANG,DAL
RN^65@5171%&	5,170	1/4	C, N, R	H, J, K, C, E	B, D	S	P, R	ANG,DAL
RN^65@5231%&	5,230	1/4	C, N, R	H, J, K, C, E	B, D, F	S	P, R	ANG,DAL
RN^65@5301%&	5,300	1/4	C, N, R	H, J, K, C, E	B, D	S	P, R	ANG,DAL
RN^65@5361%&	5,360	1/4	C, N, R	H, J, K, C, E	B, D, F	S	P, R	ANG,DAL
RN^65@5421%&	5,420	1/4	C, N, R	H, J, K, C, E	B, D	S	P, R	ANG,DAL
RN^65@5491%&	5,490	1/4	C, N, R	H, J, K, C, E	B, D, F	S	P, R	ANG,DAL

RN^65@5561%&	5,560	1/4	C, N, R	H, J, K, C, E	B, D	S	P, R	ANG,DAL
RN^65@5621%&	5,620	1/4	C, N, R	H, J, K, C, E	B, D, F	S	P, R	ANG,DAL
RN^65@5691%&	5,690	1/4	C, N, R	H, J, K, C, E	B, D	S	P, R	ANG,DAL
RN^65@5761%&	5,760	1/4	C, N, R	H, J, K, C, E	B, D, F	S	P, R	ANG,DAL
RN^65@5831%&	5,830	1/4	C, N, R	H, J, K, C, E	B, D	S	P, R	ANG,DAL
RN^65@5901%&	5,900	1/4	C, N, R	H, J, K, C, E	B, D, F	S	P, R	ANG,DAL
RN^65@5971%&	5,970	1/4	C, N, R	H, J, K, C, E	B, D	S	P, R	ANG,DAL
RN^65@6041%&	6,040	1/4	C, N, R	H, J, K, C, E	B, D, F	S	P, R	ANG,DAL
RN^65@6121%&	6,120	1/4	C, N, R	H, J, K, C, E	B, D	S	P, R	ANG,DAL
RN^65@6191%&	6,190	1/4	C, N, R	H, J, K, C, E	B, D, F	S	P, R	ANG,DAL
RN^65@6261%&	6,260	1/4	C, N, R	H, J, K, C, E	B, D	S	P, R	ANG,DAL
RN^65@6341%&	6,340	1/4	C, N, R	H, J, K, C, E	B, D, F	S	P, R	ANG,DAL
RN^65@6421%&	6,420	1/4	C, N, R	H, J, K, C, E	B, D	S	P, R	ANG,DAL
RN^65@6491%&	6,490	1/4	C, N, R	H, J, K, C, E	B, D, F	S	P, R	ANG,DAL
RN^65@6571%&	6,570	1/4	C, N, R	H, J, K, C, E	B, D	S	P, R	ANG,DAL
RN^65@6651%&	6,650	1/4	C, N, R	H, J, K, C, E	B, D, F	S	P, R	ANG,DAL
RN^65@6731%&	6,730	1/4	C, N, R	H, J, K, C, E	B, D	S	P, R	ANG,DAL
RN^65@6811%&	6,810	1/4	C, N, R	H, J, K, C, E	B, D, F	S	P, R	ANG,DAL
RN^65@6901%&	6,900	1/4	C, N, R	H, J, K, C, E	B, D	S	P, R	ANG,DAL
RN^65@6981%&	6,980	1/4	C, N, R	H, J, K, C, E	B, D, F	S	P, R	ANG,DAL
RN^65@7061%&	7,060	1/4	C, N, R	H, J, K, C, E	B, D	S	P, R	ANG,DAL
RN^65@7151%&	7,150	1/4	C, N, R	H, J, K, C, E	B, D, F	S	P, R	ANG,DAL
RN^65@7231%&	7,230	1/4	C, N, R	H, J, K, C, E	B, D	S	P, R	ANG,DAL
RN^65@7321%&	7,320	1/4	C, N, R	H, J, K, C, E	B, D, F	S	P, R	ANG,DAL
RN^65@7411%&	7,410	1/4	C, N, R	H, J, K, C, E	B, D	S	P, R	ANG,DAL
RN^65@7501%&	7,500	1/4	C, N, R	H, J, K, C, E	B, D, F	S	P, R	ANG,DAL
RN^65@7591%&	7,590	1/4	C, N, R	H, J, K, C, E	B, D	S	P, R	ANG,DAL
RN^65@7681%&	7,680	1/4	C, N, R	H, J, K, C, E	B, D, F	S	P, R	ANG,DAL
RN^65@7771%&	7,770	1/4	C, N, R	H, J, K, C, E	B, D	S	P, R	ANG,DAL
RN^65@7871%&	7,870	1/4	C, N, R	H, J, K, C, E	B, D, F	S	P, R	ANG,DAL
RN^65@7961%&	7,960	1/4	C, N, R	H, J, K, C, E	B, D	S	P, R	ANG,DAL
RN^65@8061%&	8,060	1/4	C, N, R	H, J, K, C, E	B, D, F	S	P, R	ANG,DAL
RN^65@8161%&	8,160	1/4	C, N, R	H, J, K, C, E	B, D	S	P, R	ANG,DAL
RN^65@8251%&	8,250	1/4	C, N, R	H, J, K, C, E	B, D, F	S	P, R	ANG,DAL
RN^65@8351%&	8,350	1/4	C, N, R	H, J, K, C, E	B, D	S	P, R	ANG,DAL
RN^65@8451%&	8,450	1/4	C, N, R	H, J, K, C, E	B, D, F	S	P, R	ANG,DAL
RN^65@8561%&	8,560	1/4	C, N, R	H, J, K, C, E	B, D	S	P, R	ANG,DAL
RN^65@8661%&	8,660	1/4	C, N, R	H, J, K, C, E	B, D, F	S	P, R	ANG,DAL
RN^65@8761%&	8,760	1/4	C, N, R	H, J, K, C, E	B, D	S	P, R	ANG,DAL
RN^65@8871%&	8,870	1/4	C, N, R	H, J, K, C, E	B, D, F	S	P, R	ANG,DAL
RN^65@8981%&	8,980	1/4	C, N, R	H, J, K, C, E	B, D	S	P, R	ANG,DAL
RN^65@9091%&	9,090	1/4	C, N, R	H, J, K, C, E	B, D, F	S	P, R	ANG,DAL
RN^65@9201%&	9,200	1/4	C, N, R	H, J, K, C, E	B, D	S	P, R	ANG,DAL
RN^65@9311%&	9,310	1/4	C, N, R	H, J, K, C, E	B, D, F	S	P, R	ANG,DAL
RN^65@9421%&	9,420	1/4	C, N, R	H, J, K, C, E	B, D	S	P, R	ANG,DAL
RN^65@9531%&	9,530	1/4	C, N, R	H, J, K, C, E	B, D, F	S	P, R	ANG,DAL
RN^65@9651%&	9,650	1/4	C, N, R	H, J, K, C, E	B, D	S	P, R	ANG,DAL

RN^65@9761%&	9,760	1/4	C, N, R	H, J, K, C, E	B, D, F	S	P, R	ANG,DAL
RN^65@9881%&	9,880	1/4	C, N, R	H, J, K, C, E	B, D	S	P, R	ANG,DAL
RN^65@1002%&	10,000	1/4	C, N, R	H, J, K, C, E	B, D, F	S	P, R	ANG,DAL
RN^65@1012%&	10,100	1/4	C, N, R	H, J, K, C, E	B, D	S	P, R	ANG,DAL
RN^65@1022%&	10,200	1/4	C, N, R	H, J, K, C, E	B, D, F	S	P, R	ANG,DAL
RN^65@1042%&	10,400	1/4	C, N, R	H, J, K, C, E	B, D	S	P, R	ANG,DAL
RN^65@1052%&	10,500	1/4	C, N, R	H, J, K, C, E	B, D, F	S	P, R	ANG,DAL
RN^65@1062%&	10,600	1/4	C, N, R	H, J, K, C, E	B, D	S	P, R	ANG,DAL
RN^65@1072%&	10,700	1/4	C, N, R	H, J, K, C, E	B, D, F	S	P, R	ANG,DAL
RN^65@1092%&	10,900	1/4	C, N, R	H, J, K, C, E	B, D	S	P, R	ANG,DAL
RN^65@1102%&	11,000	1/4	C, N, R	H, J, K, C, E	B, D, F	S	P, R	ANG,DAL
RN^65@1112%&	11,100	1/4	C, N, R	H, J, K, C, E	B, D	S	P, R	ANG,DAL
RN^65@1132%&	11,300	1/4	C, N, R	H, J, K, C, E	B, D, F	S	P, R	ANG,DAL
RN^65@1142%&	11,400	1/4	C, N, R	H, J, K, C, E	B, D	S	P, R	ANG,DAL
RN^65@1152%&	11,500	1/4	C, N, R	H, J, K, C, E	B, D, F	S	P, R	ANG,DAL
RN^65@1172%&	11,700	1/4	C, N, R	H, J, K, C, E	B, D	S	P, R	ANG,DAL
RN^65@1182%&	11,800	1/4	C, N, R	H, J, K, C, E	B, D, F	S	P, R	ANG,DAL
RN^65@1202%&	12,000	1/4	C, N, R	H, J, K, C, E	B, D	S	P, R	ANG,DAL
RN^65@1212%&	12,100	1/4	C, N, R	H, J, K, C, E	B, D, F	S	P, R	ANG,DAL
RN^65@1232%&	12,300	1/4	C, N, R	H, J, K, C, E	B, D	S	P, R	ANG,DAL
RN^65@1242%&	12,400	1/4	C, N, R	H, J, K, C, E	B, D, F	S	P, R	ANG,DAL
RN^65@1262%&	12,600	1/4	C, N, R	H, J, K, C, E	B, D	S	P, R	ANG,DAL
RN^65@1272%&	12,700	1/4	C, N, R	H, J, K, C, E	B, D, F	S	P, R	ANG,DAL
RN^65@1292%&	12,900	1/4	C, N, R	H, J, K, C, E	B, D	S	P, R	ANG,DAL
RN^65@1302%&	13,000	1/4	C, N, R	H, J, K, C, E	B, D, F	S	P, R	ANG,DAL
RN^65@1322%&	13,200	1/4	C, N, R	H, J, K, C, E	B, D	S	P, R	ANG,DAL
RN^65@1332%&	13,300	1/4	C, N, R	H, J, K, C, E	B, D, F	S	P, R	ANG,DAL
RN^65@1352%&	13,500	1/4	C, N, R	H, J, K, C, E	B, D	S	P, R	ANG,DAL
RN^65@1372%&	13,700	1/4	C, N, R	H, J, K, C, E	B, D, F	S	P, R	ANG,DAL
RN^65@1382%&	13,800	1/4	C, N, R	H, J, K, C, E	B, D	S	P, R	ANG,DAL
RN^65@1402%&	14,000	1/4	C, N, R	H, J, K, C, E	B, D, F	S	P, R	ANG,DAL
RN^65@1422%&	14,200	1/4	C, N, R	H, J, K, C, E	B, D	S	P, R	ANG,DAL
RN^65@1432%&	14,300	1/4	C, N, R	H, J, K, C, E	B, D, F	S	P, R	ANG,DAL
RN^65@1452%&	14,500	1/4	C, N, R	H, J, K, C, E	B, D	S	P, R	ANG,DAL
RN^65@1472%&	14,700	1/4	C, N, R	H, J, K, C, E	B, D, F	S	P, R	ANG,DAL
RN^65@1492%&	14,900	1/4	C, N, R	H, J, K, C, E	B, D	S	P, R	ANG,DAL
RN^65@1502%&	15,000	1/4	C, N, R	H, J, K, C, E	B, D, F	S	P, R	ANG,DAL
RN^65@1522%&	15,200	1/4	C, N, R	H, J, K, C, E	B, D	S	P, R	ANG,DAL
RN^65@1542%&	15,400	1/4	C, N, R	H, J, K, C, E	B, D, F	S	P, R	ANG,DAL
RN^65@1562%&	15,600	1/4	C, N, R	H, J, K, C, E	B, D	S	P, R	ANG,DAL
RN^65@1582%&	15,800	1/4	C, N, R	H, J, K, C, E	B, D, F	S	P, R	ANG,DAL
RN^65@1602%&	16,000	1/4	C, N, R	H, J, K, C, E	B, D	S	P, R	ANG,DAL
RN^65@1622%&	16,200	1/4	C, N, R	H, J, K, C, E	B, D, F	S	P, R	ANG,DAL
RN^65@1642%&	16,400	1/4	C, N, R	H, J, K, C, E	B, D	S	P, R	ANG,DAL
RN^65@1652%&	16,500	1/4	C, N, R	H, J, K, C, E	B, D, F	S	P, R	ANG,DAL
RN^65@1672%&	16,700	1/4	C, N, R	H, J, K, C, E	B, D	S	P, R	ANG,DAL
RN^65@1692%&	16,900	1/4	C, N, R	H, J, K, C, E	B, D, F	S	P, R	ANG,DAL

RN^65@1722%&	17,200	1/4	C, N, R	H, J, K, C, E	B, D	S	P, R	ANG,DAL
RN^65@1742%&	17,400	1/4	C, N, R	H, J, K, C, E	B, D, F	S	P, R	ANG,DAL
RN^65@1762%&	17,600	1/4	C, N, R	H, J, K, C, E	B, D	S	P, R	ANG,DAL
RN^65@1782%&	17,800	1/4	C, N, R	H, J, K, C, E	B, D, F	S	P, R	ANG,DAL
RN^65@1802%&	18,000	1/4	C, N, R	H, J, K, C, E	B, D	S	P, R	ANG,DAL
RN^65@1822%&	18,200	1/4	C, N, R	H, J, K, C, E	B, D, F	S	P, R	ANG,DAL
RN^65@1842%&	18,400	1/4	C, N, R	H, J, K, C, E	B, D	S	P, R	ANG,DAL
RN^65@1872%&	18,700	1/4	C, N, R	H, J, K, C, E	B, D, F	S	P, R	ANG,DAL
RN^65@1892%&	18,900	1/4	C, N, R	H, J, K, C, E	B, D	S	P, R	ANG,DAL
RN^65@1912%&	19,100	1/4	C, N, R	H, J, K, C, E	B, D, F	S	P, R	ANG,DAL
RN^65@1932%&	19,300	1/4	C, N, R	H, J, K, C, E	B, D	S	P, R	ANG,DAL
RN^65@1962%&	19,600	1/4	C, N, R	H, J, K, C, E	B, D, F	S	P, R	ANG,DAL
RN^65@1982%&	19,800	1/4	C, N, R	H, J, K, C, E	B, D	S	P, R	ANG,DAL
RN^65@2002%&	20,000	1/4	C, N, R	H, J, K, C, E	B, D, F	S	P, R	ANG,DAL
RN^65@2032%&	20,300	1/4	C, N, R	H, J, K, C, E	B, D	S	P, R	ANG,DAL
RN^65@2052%&	20,500	1/4	C, N, R	H, J, K, C, E	B, D, F	S	P, R	ANG,DAL
RN^65@2082%&	20,800	1/4	C, N, R	H, J, K, C, E	B, D	S	P, R	ANG,DAL
RN^65@2102%&	21,000	1/4	C, N, R	H, J, K, C, E	B, D, F	S	P, R	ANG,DAL
RN^65@2132%&	21,300	1/4	C, N, R	H, J, K, C, E	B, D	S	P, R	ANG,DAL
RN^65@2152%&	21,500	1/4	C, N, R	H, J, K, C, E	B, D, F	S	P, R	ANG,DAL
RN^65@2182%&	21,800	1/4	C, N, R	H, J, K, C, E	B, D	S	P, R	ANG,DAL
RN^65@2212%&	22,100	1/4	C, N, R	H, J, K, C, E	B, D, F	S	P, R	ANG,DAL
RN^65@2232%&	22,300	1/4	C, N, R	H, J, K, C, E	B, D	S	P, R	ANG,DAL
RN^65@2262%&	22,600	1/4	C, N, R	H, J, K, C, E	B, D, F	S	P, R	ANG,DAL
RN^65@2292%&	22,900	1/4	C, N, R	H, J, K, C, E	B, D	S	P, R	ANG,DAL
RN^65@2322%&	23,200	1/4	C, N, R	H, J, K, C, E	B, D, F	S	P, R	ANG,DAL
RN^65@2342%&	23,400	1/4	C, N, R	H, J, K, C, E	B, D	S	P, R	ANG,DAL
RN^65@2372%&	23,700	1/4	C, N, R	H, J, K, C, E	B, D, F	S	P, R	ANG,DAL
RN^65@2402%&	24,000	1/4	C, N, R	H, J, K, C, E	B, D	S	P, R	ANG,DAL
RN^65@2432%&	24,300	1/4	C, N, R	H, J, K, C, E	B, D, F	S	P, R	ANG,DAL
RN^65@2462%&	24,600	1/4	C, N, R	H, J, K, C, E	B, D	S	P, R	ANG,DAL
RN^65@2492%&	24,900	1/4	C, N, R	H, J, K, C, E	B, D, F	S	P, R	ANG,DAL
RN^65@2522%&	25,200	1/4	C, N, R	H, J, K, C, E	B, D	S	P, R	ANG,DAL
RN^65@2552%&	25,500	1/4	C, N, R	H, J, K, C, E	B, D, F	S	P, R	ANG,DAL
RN^65@2582%&	25,800	1/4	C, N, R	H, J, K, C, E	B, D	S	P, R	ANG,DAL
RN^65@2612%&	26,100	1/4	C, N, R	H, J, K, C, E	B, D, F	S	P, R	ANG,DAL
RN^65@2642%&	26,400	1/4	C, N, R	H, J, K, C, E	B, D	S	P, R	ANG,DAL
RN^65@2672%&	26,700	1/4	C, N, R	H, J, K, C, E	B, D, F	S	P, R	ANG,DAL
RN^65@2712%&	27,100	1/4	C, N, R	H, J, K, C, E	B, D	S	P, R	ANG,DAL
RN^65@2742%&	27,400	1/4	C, N, R	H, J, K, C, E	B, D, F	S	P, R	ANG,DAL
RN^65@2772%&	27,700	1/4	C, N, R	H, J, K, C, E	B, D	S	P, R	ANG,DAL
RN^65@2802%&	28,000	1/4	C, N, R	H, J, K, C, E	B, D, F	S	P, R	ANG,DAL
RN^65@2842%&	28,400	1/4	C, N, R	H, J, K, C, E	B, D	S	P, R	ANG,DAL
RN^65@2872%&	28,700	1/4	C, N, R	H, J, K, C, E	B, D, F	S	P, R	ANG,DAL
RN^65@2912%&	29,100	1/4	C, N, R	H, J, K, C, E	B, D	S	P, R	ANG,DAL
RN^65@2942%&	29,400	1/4	C, N, R	H, J, K, C, E	B, D, F	S	P, R	ANG,DAL
RN^65@2982%&	29,800	1/4	C, N, R	H, J, K, C, E	B, D	S	P, R	ANG,DAL

RN^65@3012%&	30,100	1/4	C, N, R	H, J, K, C, E	B, D, F	S	P, R	ANG,DAL
RN^65@3052%&	30,500	1/4	C, N, R	H, J, K, C, E	B, D	S	P, R	ANG,DAL
RN^65@3092%&	30,900	1/4	C, N, R	H, J, K, C, E	B, D, F	S	P, R	ANG,DAL
RN^65@3122%&	31,200	1/4	C, N, R	H, J, K, C, E	B, D	S	P, R	ANG,DAL
RN^65@3162%&	31,600	1/4	C, N, R	H, J, K, C, E	B, D, F	S	P, R	ANG,DAL
RN^65@3202%&	32,000	1/4	C, N, R	H, J, K, C, E	B, D	S	P, R	ANG,DAL
RN^65@3242%&	32,400	1/4	C, N, R	H, J, K, C, E	B, D, F	S	P, R	ANG,DAL
RN^65@3282%&	32,800	1/4	C, N, R	H, J, K, C, E	B, D	S	P, R	ANG,DAL
RN^65@3322%&	33,200	1/4	C, N, R	H, J, K, C, E	B, D, F	S	P, R	ANG,DAL
RN^65@3362%&	33,600	1/4	C, N, R	H, J, K, C, E	B, D	S	P, R	ANG,DAL
RN^65@3402%&	34,000	1/4	C, N, R	H, J, K, C, E	B, D, F	S	P, R	ANG,DAL
RN^65@3442%&	34,400	1/4	C, N, R	H, J, K, C, E	B, D	S	P, R	ANG,DAL
RN^65@3482%&	34,800	1/4	C, N, R	H, J, K, C, E	B, D, F	S	P, R	ANG,DAL
RN^65@3522%&	35,200	1/4	C, N, R	H, J, K, C, E	B, D	S	P, R	ANG,DAL
RN^65@3572%&	35,700	1/4	C, N, R	H, J, K, C, E	B, D, F	S	P, R	ANG,DAL
RN^65@3612%&	36,100	1/4	C, N, R	H, J, K, C, E	B, D	S	P, R	ANG,DAL
RN^65@3652%&	36,500	1/4	C, N, R	H, J, K, C, E	B, D, F	S	P, R	ANG,DAL
RN^65@3702%&	37,000	1/4	C, N, R	H, J, K, C, E	B, D	S	P, R	ANG,DAL
RN^65@3742%&	37,400	1/4	C, N, R	H, J, K, C, E	B, D, F	S	P, R	ANG,DAL
RN^65@3792%&	37,900	1/4	C, N, R	H, J, K, C, E	B, D	S	P, R	ANG,DAL
RN^65@3832%&	38,300	1/4	C, N, R	H, J, K, C, E	B, D, F	S	P, R	ANG,DAL
RN^65@3882%&	38,800	1/4	C, N, R	H, J, K, C, E	B, D	S	P, R	ANG,DAL
RN^65@3922%&	39,200	1/4	C, N, R	H, J, K, C, E	B, D, F	S	P, R	ANG,DAL
RN^65@3972%&	39,700	1/4	C, N, R	H, J, K, C, E	B, D	S	P, R	ANG,DAL
RN^65@4022%&	40,200	1/4	C, N, R	H, J, K, C, E	B, D, F	S	P, R	ANG,DAL
RN^65@4072%&	40,700	1/4	C, N, R	H, J, K, C, E	B, D	S	P, R	ANG,DAL
RN^65@4122%&	41,200	1/4	C, N, R	H, J, K, C, E	B, D, F	S	P, R	ANG,DAL
RN^65@4172%&	41,700	1/4	C, N, R	H, J, K, C, E	B, D	S	P, R	ANG,DAL
RN^65@4222%&	42,200	1/4	C, N, R	H, J, K, C, E	B, D, F	S	P, R	ANG,DAL
RN^65@4272%&	42,700	1/4	C, N, R	H, J, K, C, E	B, D	S	P, R	ANG,DAL
RN^65@4322%&	43,200	1/4	C, N, R	H, J, K, C, E	B, D, F	S	P, R	ANG,DAL
RN^65@4372%&	43,700	1/4	C, N, R	H, J, K, C, E	B, D	S	P, R	ANG,DAL
RN^65@4422%&	44,200	1/4	C, N, R	H, J, K, C, E	B, D, F	S	P, R	ANG,DAL
RN^65@4482%&	44,800	1/4	C, N, R	H, J, K, C, E	B, D	S	P, R	ANG,DAL
RN^65@4532%&	45,300	1/4	C, N, R	H, J, K, C, E	B, D, F	S	P, R	ANG,DAL
RN^65@4592%&	45,900	1/4	C, N, R	H, J, K, C, E	B, D	S	P, R	ANG,DAL
RN^65@4642%&	46,400	1/4	C, N, R	H, J, K, C, E	B, D, F	S	P, R	ANG,DAL
RN^65@4702%&	47,000	1/4	C, N, R	H, J, K, C, E	B, D	S	P, R	ANG,DAL
RN^65@4752%&	47,500	1/4	C, N, R	H, J, K, C, E	B, D, F	S	P, R	ANG,DAL
RN^65@4812%&	48,100	1/4	C, N, R	H, J, K, C, E	B, D	S	P, R	ANG,DAL
RN^65@4872%&	48,700	1/4	C, N, R	H, J, K, C, E	B, D, F	S	P, R	ANG,DAL
RN^65@4932%&	49,300	1/4	C, N, R	H, J, K, C, E	B, D	S	P, R	ANG,DAL
RN^65@4992%&	49,900	1/4	C, N, R	H, J, K, C, E	B, D, F	S	P, R	ANG,DAL
RN^65@5052%&	50,500	1/4	C, N, R	H, J, K, C, E	B, D	S	P, R	ANG,DAL
RN^65@5112%&	51,100	1/4	C, N, R	H, J, K, C, E	B, D, F	S	P, R	ANG,DAL
RN^65@5172%&	51,700	1/4	C, N, R	H, J, K, C, E	B, D	S	P, R	ANG,DAL
RN^65@5232%&	52,300	1/4	C, N, R	H, J, K, C, E	B, D, F	S	P, R	ANG,DAL

RN^65@5302%&	53,000	1/4	C, N, R	H, J, K, C, E	B, D	S	P, R	ANG,DAL
RN^65@5362%&	53,600	1/4	C, N, R	H, J, K, C, E	B, D, F	S	P, R	ANG,DAL
RN^65@5422%&	54,200	1/4	C, N, R	H, J, K, C, E	B, D	S	P, R	ANG,DAL
RN^65@5492%&	54,900	1/4	C, N, R	H, J, K, C, E	B, D, F	S	P, R	ANG,DAL
RN^65@5562%&	55,600	1/4	C, N, R	H, J, K, C, E	B, D	S	P, R	ANG,DAL
RN^65@5622%&	56,200	1/4	C, N, R	H, J, K, C, E	B, D, F	S	P, R	ANG,DAL
RN^65@5692%&	56,900	1/4	C, N, R	H, J, K, C, E	B, D	S	P, R	ANG,DAL
RN^65@5762%&	57,600	1/4	C, N, R	H, J, K, C, E	B, D, F	S	P, R	ANG,DAL
RN^65@5832%&	58,300	1/4	C, N, R	H, J, K, C, E	B, D	S	P, R	ANG,DAL
RN^65@5902%&	59,000	1/4	C, N, R	H, J, K, C, E	B, D, F	S	P, R	ANG,DAL
RN^65@5972%&	59,700	1/4	C, N, R	H, J, K, C, E	B, D	S	P, R	ANG,DAL
RN^65@6042%&	60,400	1/4	C, N, R	H, J, K, C, E	B, D, F	S	P, R	ANG,DAL
RN^65@6122%&	61,200	1/4	C, N, R	H, J, K, C, E	B, D	S	P, R	ANG,DAL
RN^65@6192%&	61,900	1/4	C, N, R	H, J, K, C, E	B, D, F	S	P, R	ANG,DAL
RN^65@6262%&	62,600	1/4	C, N, R	H, J, K, C, E	B, D	S	P, R	ANG,DAL
RN^65@6342%&	63,400	1/4	C, N, R	H, J, K, C, E	B, D, F	S	P, R	ANG,DAL
RN^65@6422%&	64,200	1/4	C, N, R	H, J, K, C, E	B, D	S	P, R	ANG,DAL
RN^65@6492%&	64,900	1/4	C, N, R	H, J, K, C, E	B, D, F	S	P, R	ANG,DAL
RN^65@6572%&	65,700	1/4	C, N, R	H, J, K, C, E	B, D	S	P, R	ANG,DAL
RN^65@6652%&	66,500	1/4	C, N, R	H, J, K, C, E	B, D, F	S	P, R	ANG,DAL
RN^65@6732%&	67,300	1/4	C, N, R	H, J, K, C, E	B, D	S	P, R	ANG,DAL
RN^65@6812%&	68,100	1/4	C, N, R	H, J, K, C, E	B, D, F	S	P, R	ANG,DAL
RN^65@6902%&	69,000	1/4	C, N, R	H, J, K, C, E	B, D	S	P, R	ANG,DAL
RN^65@6982%&	69,800	1/4	C, N, R	H, J, K, C, E	B, D, F	S	P, R	ANG,DAL
RN^65@7062%&	70,600	1/4	C, N, R	H, J, K, C, E	B, D	S	P, R	ANG,DAL
RN^65@7152%&	71,500	1/4	C, N, R	H, J, K, C, E	B, D, F	S	P, R	ANG,DAL
RN^65@7232%&	72,300	1/4	C, N, R	H, J, K, C, E	B, D	S	P, R	ANG,DAL
RN^65@7322%&	73,200	1/4	C, N, R	H, J, K, C, E	B, D, F	S	P, R	ANG,DAL
RN^65@7412%&	74,100	1/4	C, N, R	H, J, K, C, E	B, D	S	P, R	ANG,DAL
RN^65@7502%&	75,000	1/4	C, N, R	H, J, K, C, E	B, D, F	S	P, R	ANG,DAL
RN^65@7592%&	75,900	1/4	C, N, R	H, J, K, C, E	B, D	S	P, R	ANG,DAL
RN^65@7682%&	76,800	1/4	C, N, R	H, J, K, C, E	B, D, F	S	P, R	ANG,DAL
RN^65@7772%&	77,700	1/4	C, N, R	H, J, K, C, E	B, D	S	P, R	ANG,DAL
RN^65@7872%&	78,700	1/4	C, N, R	H, J, K, C, E	B, D, F	S	P, R	ANG,DAL
RN^65@7962%&	79,600	1/4	C, N, R	H, J, K, C, E	B, D	S	P, R	ANG,DAL
RN^65@8062%&	80,600	1/4	C, N, R	H, J, K, C, E	B, D, F	S	P, R	ANG,DAL
RN^65@8162%&	81,600	1/4	C, N, R	H, J, K, C, E	B, D	S	P, R	ANG,DAL
RN^65@8252%&	82,500	1/4	C, N, R	H, J, K, C, E	B, D, F	S	P, R	ANG,DAL
RN^65@8352%&	83,500	1/4	C, N, R	H, J, K, C, E	B, D	S	P, R	ANG,DAL
RN^65@8452%&	84,500	1/4	C, N, R	H, J, K, C, E	B, D, F	S	P, R	ANG,DAL
RN^65@8562%&	85,600	1/4	C, N, R	H, J, K, C, E	B, D	S	P, R	ANG,DAL
RN^65@8662%&	86,600	1/4	C, N, R	H, J, K, C, E	B, D, F	S	P, R	ANG,DAL
RN^65@8762%&	87,600	1/4	C, N, R	H, J, K, C, E	B, D	S	P, R	ANG,DAL
RN^65@8872%&	88,700	1/4	C, N, R	H, J, K, C, E	B, D, F	S	P, R	ANG,DAL
RN^65@8982%&	89,800	1/4	C, N, R	H, J, K, C, E	B, D	S	P, R	ANG,DAL
RN^65@9092%&	90,900	1/4	C, N, R	H, J, K, C, E	B, D, F	S	P, R	ANG,DAL
RN^65@9202%&	92,000	1/4	C, N, R	H, J, K, C, E	B, D	S	P, R	ANG,DAL

RN^65@9312%&	93,100	1/4	C, N, R	H, J, K, C, E	B, D, F	S	P, R	ANG,DAL
RN^65@9422%&	94,200	1/4	C, N, R	H, J, K, C, E	B, D	S	P, R	ANG,DAL
RN^65@9532%&	95,300	1/4	C, N, R	H, J, K, C, E	B, D, F	S	P, R	ANG,DAL
RN^65@9652%&	96,500	1/4	C, N, R	H, J, K, C, E	B, D	S	P, R	ANG,DAL
RN^65@9762%&	97,600	1/4	C, N, R	H, J, K, C, E	B, D, F	S	P, R	ANG,DAL
RN^65@9882%&	98,800	1/4	C, N, R	H, J, K, C, E	B, D	S	P, R	ANG,DAL
RN^65@1003%&	100,000	1/4	C, N, R	H, J, K, C, E	B, D, F	S	P, R	ANG,DAL
RN^65@1013%&	101,000	1/4	C, N, R	H, J, K, C, E	B, D	S	P, R	ANG,DAL
RN^65@1023%&	102,000	1/4	C, N, R	H, J, K, C, E	B, D, F	S	P, R	ANG,DAL
RN^65@1043%&	104,000	1/4	C, N, R	H, J, K, C, E	B, D	S	P, R	ANG,DAL
RN^65@1053%&	105,000	1/4	C, N, R	H, J, K, C, E	B, D, F	S	P, R	ANG,DAL
RN^65@1063%&	106,000	1/4	C, N, R	H, J, K, C, E	B, D	S	P, R	ANG,DAL
RN^65@1073%&	107,000	1/4	C, N, R	H, J, K, C, E	B, D, F	S	P, R	ANG,DAL
RN^65@1093%&	109,000	1/4	C, N, R	H, J, K, C, E	B, D	S	P, R	ANG,DAL
RN^65@1103%&	110,000	1/4	C, N, R	H, J, K, C, E	B, D, F	S	P, R	ANG,DAL
RN^65@1113%&	111,000	1/4	C, N, R	H, J, K, C, E	B, D	S	P, R	ANG,DAL
RN^65@1133%&	113,000	1/4	C, N, R	H, J, K, C, E	B, D, F	S	P, R	ANG,DAL
RN^65@1143%&	114,000	1/4	C, N, R	H, J, K, C, E	B, D	S	P, R	ANG,DAL
RN^65@1153%&	115,000	1/4	C, N, R	H, J, K, C, E	B, D, F	S	P, R	ANG,DAL
RN^65@1173%&	117,000	1/4	C, N, R	H, J, K, C, E	B, D	S	P, R	ANG,DAL
RN^65@1183%&	118,000	1/4	C, N, R	H, J, K, C, E	B, D, F	S	P, R	ANG,DAL
RN^65@1203%&	120,000	1/4	C, N, R	H, J, K, C, E	B, D	S	P, R	ANG,DAL
RN^65@1213%&	121,000	1/4	C, N, R	H, J, K, C, E	B, D, F	S	P, R	ANG,DAL
RN^65@1233%&	123,000	1/4	C, N, R	H, J, K, C, E	B, D	S	P, R	ANG,DAL
RN^65@1243%&	124,000	1/4	C, N, R	H, J, K, C, E	B, D, F	S	P, R	ANG,DAL
RN^65@1263%&	126,000	1/4	C, N, R	H, J, K, C, E	B, D	S	P, R	ANG,DAL
RN^65@1273%&	127,000	1/4	C, N, R	H, J, K, C, E	B, D, F	S	P, R	ANG,DAL
RN^65@1293%&	129,000	1/4	C, N, R	H, J, K, C, E	B, D	S	P, R	ANG,DAL
RN^65@1303%&	130,000	1/4	C, N, R	H, J, K, C, E	B, D, F	S	P, R	ANG,DAL
RN^65@1323%&	132,000	1/4	C, N, R	H, J, K, C, E	B, D	S	P, R	ANG,DAL
RN^65@1333%&	133,000	1/4	C, N, R	H, J, K, C, E	B, D, F	S	P, R	ANG,DAL
RN^65@1353%&	135,000	1/4	C, N, R	H, J, K, C, E	B, D	S	P, R	ANG,DAL
RN^65@1373%&	137,000	1/4	C, N, R	H, J, K, C, E	B, D, F	S	P, R	ANG,DAL
RN^65@1383%&	138,000	1/4	C, N, R	H, J, K, C, E	B, D	S	P, R	ANG,DAL
RN^65@1403%&	140,000	1/4	C, N, R	H, J, K, C, E	B, D, F	S	P, R	ANG,DAL
RN^65@1423%&	142,000	1/4	C, N, R	H, J, K, C, E	B, D	S	P, R	ANG,DAL
RN^65@1433%&	143,000	1/4	C, N, R	H, J, K, C, E	B, D, F	S	P, R	ANG,DAL
RN^65@1453%&	145,000	1/4	C, N, R	H, J, K, C, E	B, D	S	P, R	ANG,DAL
RN^65@1473%&	147,000	1/4	C, N, R	H, J, K, C, E	B, D, F	S	P, R	ANG,DAL
RN^65@1493%&	149,000	1/4	C, N, R	H, J, K, C, E	B, D	S	P, R	ANG,DAL
RN^65@1503%&	150,000	1/4	C, N, R	H, J, K, C, E	B, D, F	S	P, R	ANG,DAL
RN^65@1523%&	152,000	1/4	C, N, R	H, J, K, C, E	B, D	S	P, R	ANG,DAL
RN^65@1543%&	154,000	1/4	C, N, R	H, J, K, C, E	B, D, F	S	P, R	ANG,DAL
RN^65@1563%&	156,000	1/4	C, N, R	H, J, K, C, E	B, D	S	P, R	ANG,DAL
RN^65@1583%&	158,000	1/4	C, N, R	H, J, K, C, E	B, D, F	S	P, R	ANG,DAL
RN^65@1603%&	160,000	1/4	C, N, R	H, J, K, C, E	B, D	S	P, R	ANG,DAL
RN^65@1623%&	162,000	1/4	C, N, R	H, J, K, C, E	B, D, F	S	P, R	ANG,DAL

RN^65@1643%&	164,000	1/4	C, N, R	H, J, K, C, E	B, D	S	P, R	ANG,DAL
RN^65@1653%&	165,000	1/4	C, N, R	H, J, K, C, E	B, D, F	S	P, R	ANG,DAL
RN^65@1673%&	167,000	1/4	C, N, R	H, J, K, C, E	B, D	S	P, R	ANG,DAL
RN^65@1693%&	169,000	1/4	C, N, R	H, J, K, C, E	B, D, F	S	P, R	ANG,DAL
RN^65@1723%&	172,000	1/4	C, N, R	H, J, K, C, E	B, D	S	P, R	ANG,DAL
RN^65@1743%&	174,000	1/4	C, N, R	H, J, K, C, E	B, D, F	S	P, R	ANG,DAL
RN^65@1763%&	176,000	1/4	C, N, R	H, J, K, C, E	B, D	S	P, R	ANG,DAL
RN^65@1783%&	178,000	1/4	C, N, R	H, J, K, C, E	B, D, F	S	P, R	ANG,DAL
RN^65@1803%&	180,000	1/4	C, N, R	H, J, K, C, E	B, D	S	P, R	ANG,DAL
RN^65@1823%&	182,000	1/4	C, N, R	H, J, K, C, E	B, D, F	S	P, R	ANG,DAL
RN^65@1843%&	184,000	1/4	C, N, R	H, J, K, C, E	B, D	S	P, R	ANG,DAL
RN^65@1873%&	187,000	1/4	C, N, R	H, J, K, C, E	B, D, F	S	P, R	ANG,DAL
RN^65@1893%&	189,000	1/4	C, N, R	H, J, K, C, E	B, D	S	P, R	ANG,DAL
RN^65@1913%&	191,000	1/4	C, N, R	H, J, K, C, E	B, D, F	S	P, R	ANG,DAL
RN^65@1933%&	193,000	1/4	C, N, R	H, J, K, C, E	B, D	S	P, R	ANG,DAL
RN^65@1963%&	196,000	1/4	C, N, R	H, J, K, C, E	B, D, F	S	P, R	ANG,DAL
RN^65@1983%&	198,000	1/4	C, N, R	H, J, K, C, E	B, D	S	P, R	ANG,DAL
RN^65@2003%&	200,000	1/4	C, N, R	H, J, K, C, E	B, D, F	S	P, R	ANG,DAL
RN^65@2033%&	203,000	1/4	C, N, R	H, J, K, C, E	B, D	S	P, R	ANG,DAL
RN^65@2053%&	205,000	1/4	C, N, R	H, J, K, C, E	B, D, F	S	P, R	ANG,DAL
RN^65@2083%&	208,000	1/4	C, N, R	H, J, K, C, E	B, D	S	P, R	ANG,DAL
RN^65@2103%&	210,000	1/4	C, N, R	H, J, K, C, E	B, D, F	S	P, R	ANG,DAL
RN^65@2133%&	213,000	1/4	C, N, R	H, J, K, C, E	B, D	S	P, R	ANG,DAL
RN^65@2153%&	215,000	1/4	C, N, R	H, J, K, C, E	B, D, F	S	P, R	ANG,DAL
RN^65@2183%&	218,000	1/4	C, N, R	H, J, K, C, E	B, D	S	P, R	ANG,DAL
RN^65@2213%&	221,000	1/4	C, N, R	H, J, K, C, E	B, D, F	S	P, R	ANG,DAL
RN^65@2233%&	223,000	1/4	C, N, R	H, J, K, C, E	B, D	S	P, R	ANG,DAL
RN^65@2263%&	226,000	1/4	C, N, R	H, J, K, C, E	B, D, F	S	P, R	ANG,DAL
RN^65@2293%&	229,000	1/4	C, N, R	H, J, K, C, E	B, D	S	P, R	ANG,DAL
RN^65@2323%&	232,000	1/4	C, N, R	H, J, K, C, E	B, D, F	S	P, R	ANG,DAL
RN^65@2343%&	234,000	1/4	C, N, R	H, J, K, C, E	B, D	S	P, R	ANG,DAL
RN^65@2373%&	237,000	1/4	C, N, R	H, J, K, C, E	B, D, F	S	P, R	ANG,DAL
RN^65@2403%&	240,000	1/4	C, N, R	H, J, K, C, E	B, D	S	P, R	ANG,DAL
RN^65@2433%&	243,000	1/4	C, N, R	H, J, K, C, E	B, D, F	S	P, R	ANG,DAL
RN^65@2463%&	246,000	1/4	C, N, R	H, J, K, C, E	B, D	S	P, R	ANG,DAL
RN^65@2493%&	249,000	1/4	C, N, R	H, J, K, C, E	B, D, F	S	P, R	ANG,DAL
RN^65@2523%&	252,000	1/4	C, N, R	H, J, K, C, E	B, D	S	P, R	ANG,DAL
RN^65@2553%&	255,000	1/4	C, N, R	H, J, K, C, E	B, D, F	S	P, R	ANG,DAL
RN^65@2583%&	258,000	1/4	C, N, R	H, J, K, C, E	B, D	S	P, R	ANG,DAL
RN^65@2613%&	261,000	1/4	C, N, R	H, J, K, C, E	B, D, F	S	P, R	ANG,DAL
RN^65@2643%&	264,000	1/4	C, N, R	H, J, K, C, E	B, D	S	P, R	ANG,DAL
RN^65@2673%&	267,000	1/4	C, N, R	H, J, K, C, E	B, D, F	S	P, R	ANG,DAL
RN^65@2713%&	271,000	1/4	C, N, R	H, J, K, C, E	B, D	S	P, R	ANG,DAL
RN^65@2743%&	274,000	1/4	C, N, R	H, J, K, C, E	B, D, F	S	P, R	ANG,DAL
RN^65@2773%&	277,000	1/4	C, N, R	H, J, K, C, E	B, D	S	P, R	ANG,DAL
RN^65@2803%&	280,000	1/4	C, N, R	H, J, K, C, E	B, D, F	S	P, R	ANG,DAL
RN^65@2843%&	284,000	1/4	C, N, R	H, J, K, C, E	B, D	S	P, R	ANG,DAL

RN^65@2873%&	287,000	1/4	C, N, R	H, J, K, C, E	B, D, F	S	P, R	ANG,DAL
RN^65@2913%&	291,000	1/4	C, N, R	H, J, K, C, E	B, D	S	P, R	ANG,DAL
RN^65@2943%&	294,000	1/4	C, N, R	H, J, K, C, E	B, D, F	S	P, R	ANG,DAL
RN^65@2983%&	298,000	1/4	C, N, R	H, J, K, C, E	B, D	S	P, R	ANG,DAL
RN^65@3013%&	301,000	1/4	C, N, R	H, J, K, C, E	B, D, F	S	P, R	ANG,DAL
RN^65@3053%&	305,000	1/4	C, N, R	H, J, K, C, E	B, D	S	P, R	ANG,DAL
RN^65@3093%&	309,000	1/4	C, N, R	H, J, K, C, E	B, D, F	S	P, R	ANG,DAL
RN^65@3123%&	312,000	1/4	C, N, R	H, J, K, C, E	B, D	S	P, R	ANG,DAL
RN^65@3163%&	316,000	1/4	C, N, R	H, J, K, C, E	B, D, F	S	P, R	ANG,DAL
RN^65@3203%&	320,000	1/4	C, N, R	H, J, K, C, E	B, D	S	P, R	ANG,DAL
RN^65@3243%&	324,000	1/4	C, N, R	H, J, K, C, E	B, D, F	S	P, R	ANG,DAL
RN^65@3283%&	328,000	1/4	C, N, R	H, J, K, C, E	B, D	S	P, R	ANG,DAL
RN^65@3323%&	332,000	1/4	C, N, R	H, J, K, C, E	B, D, F	S	P, R	ANG,DAL
RN^65@3363%&	336,000	1/4	C, N, R	H, J, K, C, E	B, D	S	P, R	ANG,DAL
RN^65@3403%&	340,000	1/4	C, N, R	H, J, K, C, E	B, D, F	S	P, R	ANG,DAL
RN^65@3443%&	344,000	1/4	C, N, R	H, J, K, C, E	B, D	S	P, R	ANG,DAL
RN^65@3483%&	348,000	1/4	C, N, R	H, J, K, C, E	B, D, F	S	P, R	ANG,DAL
RN^65@3523%&	352,000	1/4	C, N, R	H, J, K, C, E	B, D	S	P, R	ANG,DAL
RN^65@3573%&	357,000	1/4	C, N, R	H, J, K, C, E	B, D, F	S	P, R	ANG,DAL
RN^65@3613%&	361,000	1/4	C, N, R	H, J, K, C, E	B, D	S	P, R	ANG,DAL
RN^65@3653%&	365,000	1/4	C, N, R	H, J, K, C, E	B, D, F	S	P, R	ANG,DAL
RN^65@3703%&	370,000	1/4	C, N, R	H, J, K, C, E	B, D	S	P, R	ANG,DAL
RN^65@3743%&	374,000	1/4	C, N, R	H, J, K, C, E	B, D, F	S	P, R	ANG,DAL
RN^65@3793%&	379,000	1/4	C, N, R	H, J, K, C, E	B, D	S	P, R	ANG,DAL
RN^65@3833%&	383,000	1/4	C, N, R	H, J, K, C, E	B, D, F	S	P, R	ANG,DAL
RN^65@3883%&	388,000	1/4	C, N, R	H, J, K, C, E	B, D	S	P, R	ANG,DAL
RN^65@3923%&	392,000	1/4	C, N, R	H, J, K, C, E	B, D, F	S	P, R	ANG,DAL
RN^65@3973%&	397,000	1/4	C, N, R	H, J, K, C, E	B, D	S	P, R	ANG,DAL
RN^65@4023%&	402,000	1/4	C, N, R	H, J, K, C, E	B, D, F	S	P, R	ANG,DAL
RN^65@4073%&	407,000	1/4	C, N, R	H, J, K, C, E	B, D	S	P, R	ANG,DAL
RN^65@4123%&	412,000	1/4	C, N, R	H, J, K, C, E	B, D, F	S	P, R	ANG,DAL
RN^65@4173%&	417,000	1/4	C, N, R	H, J, K, C, E	B, D	S	P, R	ANG,DAL
RN^65@4223%&	422,000	1/4	C, N, R	H, J, K, C, E	B, D, F	S	P, R	ANG,DAL
RN^65@4273%&	427,000	1/4	C, N, R	H, J, K, C, E	B, D	S	P, R	ANG,DAL
RN^65@4323%&	432,000	1/4	C, N, R	H, J, K, C, E	B, D, F	S	P, R	ANG,DAL
RN^65@4373%&	437,000	1/4	C, N, R	H, J, K, C, E	B, D	S	P, R	ANG,DAL
RN^65@4423%&	442,000	1/4	C, N, R	H, J, K, C, E	B, D, F	S	P, R	ANG,DAL
RN^65@4483%&	448,000	1/4	C, N, R	H, J, K, C, E	B, D	S	P, R	ANG,DAL
RN^65@4533%&	453,000	1/4	C, N, R	H, J, K, C, E	B, D, F	S	P, R	ANG,DAL
RN^65@4593%&	459,000	1/4	C, N, R	H, J, K, C, E	B, D	S	P, R	ANG,DAL
RN^65@4643%&	464,000	1/4	C, N, R	H, J, K, C, E	B, D, F	S	P, R	ANG,DAL
RN^65@4703%&	470,000	1/4	C, N, R	H, J, K, C, E	B, D	S	P, R	ANG,DAL
RN^65@4753%&	475,000	1/4	C, N, R	H, J, K, C, E	B, D, F	S	P, R	ANG,DAL
RN^65@4813%&	481,000	1/4	C, N, R	H, J, K, C, E	B, D	S	P, R	ANG,DAL
RN^65@4873%&	487,000	1/4	C, N, R	H, J, K, C, E	B, D, F	S	P, R	ANG,DAL
RN^65@4933%&	493,000	1/4	C, N, R	H, J, K, C, E	B, D	S	P, R	ANG,DAL
RN^65@4993%&	499,000	1/4	C, N, R	H, J, K, C, E	B, D, F	S	P, R	ANG,DAL

RN^65@5053%&	505,000	1/4	C, N, R	H, J, K, C, E	B, D		P, R	ANG, DAL
RN^65@5113%&	511,000	1/4	C, N, R	H, J, K, C, E	B, D, F		P, R	ANG, DAL
RN^65@5173%&	517,000	1/4	C, N, R	H, J, K, C, E	B, D		P, R	ANG, DAL
RN^65@5233%&	523,000	1/4	C, N, R	H, J, K, C, E	B, D, F		P, R	ANG, DAL
RN^65@5303%&	530,000	1/4	C, N, R	H, J, K, C, E	B, D		P, R	ANG, DAL
RN^65@5363%&	536,000	1/4	C, N, R	H, J, K, C, E	B, D, F		P, R	ANG, DAL
RN^65@5423%&	542,000	1/4	C, N, R	H, J, K, C, E	B, D		P, R	ANG, DAL
RN^65@5493%&	549,000	1/4	C, N, R	H, J, K, C, E	B, D, F		P, R	ANG, DAL
RN^65@5563%&	556,000	1/4	C, N, R	H, J, K, C, E	B, D		P, R	ANG, DAL
RN^65@5623%&	562,000	1/4	C, N, R	H, J, K, C, E	B, D, F		P, R	ANG, DAL
RN^65@5693%&	569,000	1/4	C, N, R	H, J, K, C, E	B, D		P, R	ANG, DAL
RN^65@5763%&	576,000	1/4	C, N, R	H, J, K, C, E	B, D, F		P, R	ANG, DAL
RN^65@5833%&	583,000	1/4	C, N, R	H, J, K, C, E	B, D		P, R	ANG, DAL
RN^65@5903%&	590,000	1/4	C, N, R	H, J, K, C, E	B, D, F		P, R	ANG, DAL
RN^65@5973%&	597,000	1/4	C, N, R	H, J, K, C, E	B, D		P, R	ANG, DAL
RN^65@6043%&	604,000	1/4	C, N, R	H, J, K, C, E	B, D, F		P, R	ANG, DAL
RN^65@6123%&	612,000	1/4	C, N, R	H, J, K, C, E	B, D		P, R	ANG, DAL
RN^65@6193%&	619,000	1/4	C, N, R	H, J, K, C, E	B, D, F		P, R	ANG, DAL
RN^65@6263%&	626,000	1/4	C, N, R	H, J, K, C, E	B, D		P, R	ANG, DAL
RN^65@6343%&	634,000	1/4	C, N, R	H, J, K, C, E	B, D, F		P, R	ANG, DAL
RN^65@6423%&	642,000	1/4	C, N, R	H, J, K, C, E	B, D		P, R	ANG, DAL
RN^65@6493%&	649,000	1/4	C, N, R	H, J, K, C, E	B, D, F		P, R	ANG, DAL
RN^65@6573%&	657,000	1/4	C, N, R	H, J, K, C, E	B, D		P, R	ANG, DAL
RN^65@6653%&	665,000	1/4	C, N, R	H, J, K, C, E	B, D, F		P, R	ANG, DAL
RN^65@6733%&	673,000	1/4	C, N, R	H, J, K, C, E	B, D		P, R	ANG, DAL
RN^65@6813%&	681,000	1/4	C, N, R	H, J, K, C, E	B, D, F		P, R	ANG, DAL
RN^65@6903%&	690,000	1/4	C, N, R	H, J, K, C, E	B, D		P, R	ANG, DAL
RN^65@6983%&	698,000	1/4	C, N, R	H, J, K, C, E	B, D, F		P, R	ANG, DAL
RN^65@7063%&	706,000	1/4	C, N, R	H, J, K, C, E	B, D		P, R	ANG, DAL
RN^65@7153%&	715,000	1/4	C, N, R	H, J, K, C, E	B, D, F		P, R	ANG, DAL
RN^65@7233%&	723,000	1/4	C, N, R	H, J, K, C, E	B, D		P, R	ANG, DAL
RN^65@7323%&	732,000	1/4	C, N, R	H, J, K, C, E	B, D, F		P, R	ANG, DAL
RN^65@7413%&	741,000	1/4	C, N, R	H, J, K, C, E	B, D		P, R	ANG, DAL
RN^65@7503%&	750,000	1/4	C, N, R	H, J, K, C, E	B, D, F		P, R	ANG, DAL
RN^65@7593%&	759,000	1/4	C, N, R	H, J, K, C, E	B, D		P, R	ANG, DAL
RN^65@7683%&	768,000	1/4	C, N, R	H, J, K, C, E	B, D, F		P, R	ANG, DAL
RN^65@7773%&	777,000	1/4	C, N, R	H, J, K, C, E	B, D		P, R	ANG, DAL
RN^65@7873%&	787,000	1/4	C, N, R	H, J, K, C, E	B, D, F		P, R	ANG, DAL
RN^65@7963%&	796,000	1/4	C, N, R	H, J, K, C, E	B, D		P, R	ANG, DAL
RN^65@8063%&	806,000	1/4	C, N, R	H, J, K, C, E	B, D, F		P, R	ANG, DAL
RN^65@8163%&	816,000	1/4	C, N, R	H, J, K, C, E	B, D		P, R	ANG, DAL
RN^65@8253%&	825,000	1/4	C, N, R	H, J, K, C, E	B, D, F		P, R	ANG, DAL
RN^65@8353%&	835,000	1/4	C, N, R	H, J, K, C, E	B, D		P, R	ANG, DAL
RN^65@8453%&	845,000	1/4	C, N, R	H, J, K, C, E	B, D, F		P, R	ANG, DAL
RN^65@8563%&	856,000	1/4	C, N, R	H, J, K, C, E	B, D		P, R	ANG, DAL
RN^65@8663%&	866,000	1/4	C, N, R	H, J, K, C, E	B, D, F		P, R	ANG, DAL
RN^65@8763%&	876,000	1/4	C, N, R	H, J, K, C, E	B, D		P, R	ANG, DAL

RN^65@8873%&	887,000	1/4	C, N, R	H, J, K, C, E	B, D, F		P, R	ANG, DAL
RN^65@8983%&	898,000	1/4	C, N, R	H, J, K, C, E	B, D		P, R	ANG, DAL
RN^65@9093%&	909,000	1/4	C, N, R	H, J, K, C, E	B, D, F		P, R	ANG, DAL
RN^65@9203%&	920,000	1/4	C, N, R	H, J, K, C, E	B, D		P, R	ANG, DAL
RN^65@9313%&	931,000	1/4	C, N, R	H, J, K, C, E	B, D, F		P, R	ANG, DAL
RN^65@9423%&	942,000	1/4	C, N, R	H, J, K, C, E	B, D		P, R	ANG, DAL
RN^65@9533%&	953,000	1/4	C, N, R	H, J, K, C, E	B, D, F		P, R	ANG, DAL
RN^65@9653%&	965,000	1/4	C, N, R	H, J, K, C, E	B, D		P, R	ANG, DAL
RN^65@9763%&	976,000	1/4	C, N, R	H, J, K, C, E	B, D, F		P, R	ANG, DAL
RN^65@9883%&	988,000	1/4	C, N, R	H, J, K, C, E	B, D		P, R	ANG, DAL
RN^65@1004%&	1,000,000	1/4	C, N, R	H, J, K, C, E	B, D, F		P, R	ANG, DAL
RN^65@1014%&	1,010,000	1/4	C, N, R	H, J, K, C, E	B, D		P, R	ANG, DAL
RN^65@1024%&	1,020,000	1/4	C, N, R	H, J, K, C, E	B, D, F		P, R	ANG, DAL
RN^65@1044%&	1,040,000	1/4	C, N, R	H, J, K, C, E	B, D		P, R	ANG, DAL
RN^65@1054%&	1,050,000	1/4	C, N, R	H, J, K, C, E	B, D, F		P, R	ANG, DAL
RN^65@1064%&	1,060,000	1/4	C, N, R	H, J, K, C, E	B, D		P, R	ANG, DAL
RN^65@1074%&	1,070,000	1/4	C, N, R	H, J, K, C, E	B, D, F		P, R	ANG, DAL
RN^65@1094%&	1,090,000	1/4	C, N, R	H, J, K, C, E	B, D		P, R	ANG, DAL
RN^65@1104%&	1,100,000	1/4	C, N, R	H, J, K, C, E	B, D, F		P, R	ANG, DAL
RN^65@1114%&	1,110,000	1/4	C, N, R	H, J, K, C, E	B, D		P, R	ANG, DAL
RN^65@1134%&	1,130,000	1/4	C, N, R	H, J, K, C, E	B, D, F		P, R	ANG, DAL
RN^65@1144%&	1,140,000	1/4	C, N, R	H, J, K, C, E	B, D		P, R	ANG, DAL
RN^65@1154%&	1,150,000	1/4	C, N, R	H, J, K, C, E	B, D, F		P, R	ANG, DAL
RN^65@1174%&	1,170,000	1/4	C, N, R	H, J, K, C, E	B, D		P, R	ANG, DAL
RN^65@1184%&	1,180,000	1/4	C, N, R	H, J, K, C, E	B, D, F		P, R	ANG, DAL
RN^65@1204%&	1,200,000	1/4	C, N, R	H, J, K, C, E	B, D		P, R	ANG, DAL
RN^65@1214%&	1,210,000	1/4	C, N, R	H, J, K, C, E	B, D, F		P, R	ANG, DAL
RN^65@1234%&	1,230,000	1/4	C, N, R	H, J, K, C, E	B, D		P, R	ANG, DAL
RN^65@1244%&	1,240,000	1/4	C, N, R	H, J, K, C, E	B, D, F		P, R	ANG, DAL
RN^65@1264%&	1,260,000	1/4	C, N, R	H, J, K, C, E	B, D		P, R	ANG, DAL
RN^65@1274%&	1,270,000	1/4	C, N, R	H, J, K, C, E	B, D, F		P, R	ANG, DAL
RN^65@1294%&	1,290,000	1/4	C, N, R	H, J, K, C, E	B, D		P, R	ANG, DAL
RN^65@1304%&	1,300,000	1/4	C, N, R	H, J, K, C, E	B, D, F		P, R	ANG, DAL
RN^65@1324%&	1,320,000	1/4	C, N, R	H, J, K, C, E	B, D		P, R	ANG, DAL
RN^65@1334%&	1,330,000	1/4	C, N, R	H, J, K, C, E	B, D, F		P, R	ANG, DAL
RN^65@1354%&	1,350,000	1/4	C, N, R	H, J, K, C, E	B, D		P, R	ANG, DAL
RN^65@1374%&	1,370,000	1/4	C, N, R	H, J, K, C, E	B, D, F		P, R	ANG, DAL
RN^65@1384%&	1,380,000	1/4	C, N, R	H, J, K, C, E	B, D		P, R	ANG, DAL
RN^65@1404%&	1,400,000	1/4	C, N, R	H, J, K, C, E	B, D, F		P, R	ANG, DAL
RN^65@1424%&	1,420,000	1/4	C, N, R	H, J, K, C, E	B, D		P, R	ANG, DAL
RN^65@1434%&	1,430,000	1/4	C, N, R	H, J, K, C, E	B, D, F		P, R	ANG, DAL
RN^65@1454%&	1,450,000	1/4	C, N, R	H, J, K, C, E	B, D		P, R	ANG, DAL
RN^65@1474%&	1,470,000	1/4	C, N, R	H, J, K, C, E	B, D, F		P, R	ANG, DAL
RN^65@1494%&	1,490,000	1/4	C, N, R	H, J, K, C, E	B, D		P, R	ANG, DAL
RN^65@1504%&	1,500,000	1/4	C, N, R	H, J, K, C, E	B, D, F		P, R	ANG, DAL
RN^65@1524%&	1,520,000	1/4	C, N, R	H, J, K, C, E	B, D		P, R	ANG, DAL
RN^65@1544%&	1,540,000	1/4	C, N, R	H, J, K, C, E	B, D, F		P, R	ANG, DAL

RN^65@1564%&	1,560,000	1/4	C, N, R	H, J, K, C, E	B, D		P, R	ANG, DAL
RN^65@1584%&	1,580,000	1/4	C, N, R	H, J, K, C, E	B, D, F		P, R	ANG, DAL
RN^65@1604%&	1,600,000	1/4	C, N, R	H, J, K, C, E	B, D		P, R	ANG, DAL
RN^65@1624%&	1,620,000	1/4	C, N, R	H, J, K, C, E	B, D, F		P, R	ANG, DAL
RN^65@1644%&	1,640,000	1/4	C, N, R	H, J, K, C, E	B, D		P, R	ANG, DAL
RN^65@1654%&	1,650,000	1/4	C, N, R	H, J, K, C, E	B, D, F		P, R	ANG, DAL
RN^65@1674%&	1,670,000	1/4	C, N, R	H, J, K, C, E	B, D		P, R	ANG, DAL
RN^65@1694%&	1,690,000	1/4	C, N, R	H, J, K, C, E	B, D, F		P, R	ANG, DAL
RN^65@1724%&	1,720,000	1/4	C, N, R	H, J, K, C, E	B, D		P, R	ANG, DAL
RN^65@1744%&	1,740,000	1/4	C, N, R	H, J, K, C, E	B, D, F		P, R	ANG, DAL
RN^65@1764%&	1,760,000	1/4	C, N, R	H, J, K, C, E	B, D		P, R	ANG, DAL
RN^65@1784%&	1,780,000	1/4	C, N, R	H, J, K, C, E	B, D, F		P, R	ANG, DAL
RN^65@1804%&	1,800,000	1/4	C, N, R	H, J, K, C, E	B, D		P, R	ANG, DAL
RN^65@1824%&	1,820,000	1/4	C, N, R	H, J, K, C, E	B, D, F		P, R	ANG, DAL
RN^65@1844%&	1,840,000	1/4	C, N, R	H, J, K, C, E	B, D		P, R	ANG, DAL
RN^65@1874%&	1,870,000	1/4	C, N, R	H, J, K, C, E	B, D, F		P, R	ANG, DAL
RN^65@1894%&	1,890,000	1/4	C, N, R	H, J, K, C, E	B, D		P, R	ANG, DAL
RN^65@1914%&	1,910,000	1/4	C, N, R	H, J, K, C, E	B, D, F		P, R	ANG, DAL
RN^65@1934%&	1,930,000	1/4	C, N, R	H, J, K, C, E	B, D		P, R	ANG, DAL
RN^65@1964%&	1,960,000	1/4	C, N, R	H, J, K, C, E	B, D, F		P, R	ANG, DAL
RN^65@1984%&	1,980,000	1/4	C, N, R	H, J, K, C, E	B, D		P, R	ANG, DAL
RN^65@2004%&	2,000,000	1/4	C, N, R	H, J, K, C, E	B, D, F		P, R	ANG, DAL
RN^65@2034%&	2,030,000	1/4	C, N, R	H, J, K, C, E	B, D		P, R	ANG, DAL
RN^65@2054%&	2,050,000	1/4	C, N, R	H, J, K, C, E	B, D, F		P, R	ANG, DAL
RN^65@2084%&	2,080,000	1/4	C, N, R	H, J, K, C, E	B, D		P, R	ANG, DAL
RN^65@2104%&	2,100,000	1/4	C, N, R	H, J, K, C, E	B, D, F		P, R	ANG, DAL
RN^65@2134%&	2,130,000	1/4	C, N, R	H, J, K, C, E	B, D		P, R	ANG, DAL
RN^65@2154%&	2,150,000	1/4	C, N, R	H, J, K, C, E	B, D, F		P, R	ANG, DAL
RN^65@2184%&	2,180,000	1/4	C, N, R	H, J, K, C, E	B, D		P, R	ANG, DAL
RN^65@2214%&	2,210,000	1/4	C, N, R	H, J, K, C, E	B, D, F		P, R	ANG, DAL
RN^65@2234%&	2,230,000	1/4	C, N, R	H, J, K, C, E	B, D		P, R	ANG, DAL
RN^65@2264%&	2,260,000	1/4	C, N, R	H, J, K, C, E	B, D, F		P, R	ANG, DAL
RN^65@2294%&	2,290,000	1/4	C, N, R	H, J, K, C, E	B, D		P, R	ANG, DAL
RN^65@2324%&	2,320,000	1/4	C, N, R	H, J, K, C, E	B, D, F		P, R	ANG, DAL
RN^65@2344%&	2,340,000	1/4	C, N, R	H, J, K, C, E	B, D		P, R	ANG, DAL
RN^65@2374%&	2,370,000	1/4	C, N, R	H, J, K, C, E	B, D, F		P, R	ANG, DAL
RN^65@2404%&	2,400,000	1/4	C, N, R	H, J, K, C, E	B, D		P, R	ANG, DAL
RN^65@2434%&	2,430,000	1/4	C, N, R	H, J, K, C, E	B, D, F		P, R	ANG, DAL
RN^65@2464%&	2,460,000	1/4	C, N, R	H, J, K, C, E	B, D		P, R	ANG, DAL
RN^65@2494%&	2,490,000	1/4	C, N, R	H, J, K, C, E	B, D, F		P, R	ANG, DAL
RN^65@2524%&	2,520,000	1/4	C, N, R	H, J, K, C, E	B, D		P, R	ANG, DAL
RN^65@2554%&	2,550,000	1/4	C, N, R	H, J, K, C, E	B, D, F		P, R	ANG, DAL
RN^65@2584%&	2,580,000	1/4	C, N, R	H, J, K, C, E	B, D		P, R	ANG, DAL
RN^65@2614%&	2,610,000	1/4	C, N, R	H, J, K, C, E	B, D, F		P, R	ANG, DAL
RN^65@2644%&	2,640,000	1/4	C, N, R	H, J, K, C, E	B, D		P, R	ANG, DAL
RN^65@2674%&	2,670,000	1/4	C, N, R	H, J, K, C, E	B, D, F		P, R	ANG, DAL
RN^65@2714%&	2,710,000	1/4	C, N, R	H, J, K, C, E	B, D		P, R	ANG, DAL

RN^65@2744%&	2,740,000	1/4	C, N, R	H, J, K, C, E	B, D, F		P, R	ANG, DAL
RN^65@2774%&	2,770,000	1/4	C, N, R	H, J, K, C, E	B, D		P, R	ANG, DAL
RN^65@2804%&	2,800,000	1/4	C, N, R	H, J, K, C, E	B, D, F		P, R	ANG, DAL
RN^65@2844%&	2,840,000	1/4	C, N, R	H, J, K, C, E	B, D		P, R	ANG, DAL
RN^65@2874%&	2,870,000	1/4	C, N, R	H, J, K, C, E	B, D, F		P, R	ANG, DAL
RN^65@2914%&	2,910,000	1/4	C, N, R	H, J, K, C, E	B, D		P, R	ANG, DAL
RN^65@2944%&	2,940,000	1/4	C, N, R	H, J, K, C, E	B, D, F		P, R	ANG, DAL
RN^65@2984%&	2,980,000	1/4	C, N, R	H, J, K, C, E	B, D		P, R	ANG, DAL
RN^65@3014%&	3,010,000	1/4	C, N, R	H, J, K, C, E	B, D, F		P, R	ANG, DAL
RN^65@3054%&	3,050,000	1/4	N, R	C, E	B, D		P	ANG
RN^65@3094%&	3,090,000	1/4	N, R	C, E	B, D, F		P	ANG
RN^65@3124%&	3,120,000	1/4	N, R	C, E	B, D		P	ANG
RN^65@3164%&	3,160,000	1/4	N, R	C, E	B, D, F		P	ANG
RN^65@3204%&	3,200,000	1/4	N, R	C, E	B, D		P	ANG
RN^65@3244%&	3,240,000	1/4	N, R	C, E	B, D, F		P	ANG
RN^65@3284%&	3,280,000	1/4	N, R	C, E	B, D		P	ANG
RN^65@3324%&	3,320,000	1/4	N, R	C, E	B, D, F		P	ANG
RN^65@3364%&	3,360,000	1/4	N, R	C, E	B, D		P	ANG
RN^65@3404%&	3,400,000	1/4	N, R	C, E	B, D, F		P	ANG
RN^65@3444%&	3,440,000	1/4	N, R	C, E	B, D		P	ANG
RN^65@3484%&	3,480,000	1/4	N, R	C, E	B, D, F		P	ANG
RN^65@3524%&	3,520,000	1/4	N, R	C, E	B, D		P	ANG
RN^65@3574%&	3,570,000	1/4	N, R	C, E	B, D, F		P	ANG
RN^65@3614%&	3,610,000	1/4	N, R	C, E	B, D		P	ANG
RN^65@3654%&	3,650,000	1/4	N, R	C, E	B, D, F		P	ANG
RN^65@3704%&	3,700,000	1/4	N, R	C, E	B, D		P	ANG
RN^65@3744%&	3,740,000	1/4	N, R	C, E	B, D, F		P	ANG
RN^65@3794%&	3,790,000	1/4	N, R	C, E	B, D		P	ANG
RN^65@3834%&	3,830,000	1/4	N, R	C, E	B, D, F		P	ANG
RN^65@3884%&	3,880,000	1/4	N, R	C, E	B, D		P	ANG
RN^65@3924%&	3,920,000	1/4	N, R	C, E	B, D, F		P	ANG
RN^65@3974%&	3,970,000	1/4	N, R	C, E	B, D		P	ANG
RN^65@4024%&	4,020,000	1/4	N, R	C, E	B, D, F		P	ANG
RN^65@4074%&	4,070,000	1/4	N, R	C, E	B, D		P	ANG
RN^65@4124%&	4,120,000	1/4	N, R	C, E	B, D, F		P	ANG
RN^65@4174%&	4,170,000	1/4	N, R	C, E	B, D		P	ANG
RN^65@4224%&	4,220,000	1/4	N, R	C, E	B, D, F		P	ANG
RN^65@4274%&	4,270,000	1/4	N, R	C, E	B, D		P	ANG
RN^65@4324%&	4,320,000	1/4	N, R	C, E	B, D, F		P	ANG
RN^65@4374%&	4,370,000	1/4	N, R	C, E	B, D		P	ANG
RN^65@4424%&	4,420,000	1/4	N, R	C, E	B, D, F		P	ANG
RN^65@4484%&	4,480,000	1/4	N, R	C, E	B, D		P	ANG
RN^65@4534%&	4,530,000	1/4	N, R	C, E	B, D, F		P	ANG
RN^65@4594%&	4,590,000	1/4	N, R	C, E	B, D		P	ANG
RN^65@4644%&	4,640,000	1/4	N, R	C, E	B, D, F		P	ANG
RN^65@4704%&	4,700,000	1/4	N, R	C, E	B, D		P	ANG
RN^65@4754%&	4,750,000	1/4	N, R	C, E	B, D, F		P	ANG

RN^65@4814%&	4,810,000	1/4	N, R	C, E	B, D		P	ANG
RN^65@4874%&	4,870,000	1/4	N, R	C, E	B, D, F		P	ANG
RN^65@4934%&	4,930,000	1/4	N, R	C, E	B, D		P	ANG
RN^65@4994%&	4,990,000	1/4	N, R	C, E	B, D, F		P	ANG

RN^65 RESISTORS DECADE BREAKDOWN

Click on the link below to see the associated parts selection listing:

Resistance Range
10.0 Ohms through 98.8 Ohms
100 Ohms through 988 Ohms
1,000 Ohms through 9,880 Ohms
10,000 Ohms through 98,800 Ohms
100,000 Ohms through 988,000 Ohms
1,000,000 Ohms through 4,990,000 Ohms

RN^65 Film Resistors: 10.0 Ohms through 98.8 Ohms

	Resistance	Power	Term.	Char.	Resistance	Level 1	Level 2	
Part Number	Value (Ohms)	Rating (W)	Type (^)	(@)	Tolerance (%)	(FRL) (&)	(FRL) (&)	Manufacturer
RN^65@10R0%&	10.0	1/4	C, R	H, J, K	B, D, F		P, R	DAL
RN^65@10R1%&	10.1	1/4	C, R	H, J, K	B, D		P, R	DAL
RN^65@10R2%&	10.2	1/4	C, R	H, J, K	B, D, F		P, R	DAL
RN^65@10R4%&	10.4	1/4	C, R	H, J, K	B, D		P, R	DAL
RN^65@10R5%&	10.5	1/4	C, R	H, J, K	B, D, F		P, R	DAL
RN^65@10R6%&	10.6	1/4	C, R	H, J, K	B, D		P, R	DAL
RN^65@10R7%&	10.7	1/4	C, R	H, J, K	B, D, F		P, R	DAL
	Resistance	Power	Term.	Char.	Resistance	Level 1	Level 2	
Part Number	Value (Ohms)	Rating (W)	Type (^)	(@)	Tolerance (%)	(FRL) (&)	(FRL) (&)	Manufacturer
RN^65@10R9%&	10.9	1/4	C, R	H, J, K	B, D		P, R	DAL
RN^65@11R0%&	11.0	1/4	C, R	H, J, K	B, D, F		P, R	DAL
RN^65@11R1%&	11.1	1/4	C, R	H, J, K	B, D		P, R	DAL
RN^65@11R3%&	11.3	1/4	C, R	H, J, K	B, D, F		P, R	DAL
RN^65@11R4%&	11.4	1/4	C, R	H, J, K	B, D		P, R	DAL
RN^65@11R5%&	11.5	1/4	C, R	H, J, K	B, D, F		P, R	DAL
RN^65@11R7%&	11.7	1/4	C, R	H, J, K	B, D		P, R	DAL
	Resistance	Power	Term.	Char.	Resistance	Level 1	Level 2	
Part Number	Value (Ohms)	Rating (W)	Type (^)	(@)	Tolerance (%)	(FRL) (&)	(FRL) (&)	Manufacturer
RN^65@11R8%&	11.8	1/4	C, R	H, J, K	B, D, F		P, R	DAL
RN^65@12R0%&	12.0	1/4	C, R	H, J, K	B, D		P, R	DAL
RN^65@12R1%&	12.1	1/4	C, R	H, J, K	B, D, F		P, R	DAL
RN^65@12R3%&	12.3	1/4	C, R	H, J, K	B, D		P, R	DAL
RN^65@12R4%&	12.4	1/4	C, R	H, J, K	B, D, F		P, R	DAL
RN^65@12R6%&	12.6	1/4	C, R	H, J, K	B, D		P, R	DAL

RN^65@12R7%&	12.7	1/4	C, R	H, J, K	B, D, F		P, R	DAL
	Resistance	Power	Term.	Char.	Resistance	Level 1	Level 2	
Part Number	Value (Ohms)	Rating (W)	Type (^)	(@)	Tolerance (%)	(FRL) (&)	(FRL) (&)	Manufacturer
RN^65@12R9%&	12.9	1/4	C, R	H, J, K	B, D		P, R	DAL
RN^65@13R0%&	13.0	1/4	C, R	H, J, K	B, D, F		P, R	DAL
RN^65@13R2%&	13.2	1/4	C, R	H, J, K	B, D		P, R	DAL
RN^65@13R3%&	13.3	1/4	C, R	H, J, K	B, D, F		P, R	DAL
RN^65@13R5%&	13.5	1/4	C, R	H, J, K	B, D		P, R	DAL
RN^65@13R7%&	13.7	1/4	C, R	H, J, K	B, D, F		P, R	DAL
RN^65@13R8%&	13.8	1/4	C, R	H, J, K	B, D		P, R	DAL
	Resistance	Power	Term.	Char.	Resistance	Level 1	Level 2	
Part Number	Value (Ohms)	Rating (W)	Type (^)	(@)	Tolerance (%)	(FRL) (&)	(FRL) (&)	Manufacturer
	Resistance	Power	Term.	Char.	Resistance	Level 1	Level 2	
Part Number	Value (Ohms)	Rating (W)	Type (^)	(@)	Tolerance (%)	(FRL) (&)	(FRL) (&)	Manufacturer
RN^65@14R0%&	14.0	1/4	C, R	H, J, K	B, D, F		P, R	DAL
RN^65@14R2%&	14.2	1/4	C, R	H, J, K	B, D		P, R	DAL
RN^65@14R3%&	14.3	1/4	C, R	H, J, K	B, D, F		P, R	DAL
RN^65@14R5%&	14.5	1/4	C, R	H, J, K	B, D		P, R	DAL
RN^65@14R7%&	14.7	1/4	C, R	H, J, K	B, D, F		P, R	DAL
RN^65@14R9%&	14.9	1/4	C, R	H, J, K	B, D		P, R	DAL
RN^65@15R0%&	15.0	1/4	C, R	H, J, K	B, D, F		P, R	DAL
	Resistance	Power	Term.	Char.	Resistance	Level 1	Level 2	
Part Number	Value (Ohms)	Rating (W)	Type (^)	(@)	Tolerance (%)	(FRL) (&)	(FRL) (&)	Manufacturer
RN^65@15R2%&	15.2	1/4	C, R	H, J, K	B, D		P, R	DAL
RN^65@15R4%&	15.4	1/4	C, R	H, J, K	B, D, F		P, R	DAL
RN^65@15R6%&	15.6	1/4	C, R	H, J, K	B, D		P, R	DAL
RN^65@15R8%&	15.8	1/4	C, R	H, J, K	B, D, F		P, R	DAL
RN^65@16R0%&	16.0	1/4	C, R	H, J, K	B, D		P, R	DAL
RN^65@16R2%&	16.2	1/4	C, R	H, J, K	B, D, F		P, R	DAL
RN^65@16R4%&	16.4	1/4	C, R	H, J, K	B, D		P, R	DAL
	Resistance	Power	Term.	Char.	Resistance	Level 1	Level 2	
Part Number	Value (Ohms)	Rating (W)	Type (^)	(@)	Tolerance (%)	(FRL) (&)	(FRL) (&)	Manufacturer
RN^65@16R5%&	16.5	1/4	C, R	H, J, K	B, D, F		P, R	DAL
RN^65@16R7%&	16.7	1/4	C, R	H, J, K	B, D		P, R	DAL
RN^65@16R9%&	16.9	1/4	C, R	H, J, K	B, D, F		P, R	DAL
RN^65@17R2%&	17.2	1/4	C, R	H, J, K	B, D		P, R	DAL
RN^65@17R4%&	17.4	1/4	C, R	H, J, K	B, D, F		P, R	DAL
RN^65@17R6%&	17.6	1/4	C, R	H, J, K	B, D		P, R	DAL
RN^65@17R8%&	17.8	1/4	C, R	H, J, K	B, D, F		P, R	DAL
	Resistance	Power	Term.	Char.	Resistance	Level 1	Level 2	
Part Number	Value (Ohms)	Rating (W)	Type (^)	(@)	Tolerance (%)	(FRL) (&)	(FRL) (&)	Manufacturer
RN^65@18R0%&	18.0	1/4	C, R	H, J, K	B, D		P, R	DAL
RN^65@18R2%&	18.2	1/4	C, R	H, J, K	B, D, F		P, R	DAL
RN^65@18R4%&	18.4	1/4	C, R	H, J, K	B, D		P, R	DAL
RN^65@18R7%&	18.7	1/4	C, R	H, J, K	B, D, F		P, R	DAL
RN^65@18R9%&	18.9	1/4	C, R	H, J, K	B, D		P, R	DAL
RN^65@19R1%&	19.1	1/4	C, R	H, J, K	B, D, F		P, R	DAL

RN^65@19R3%&	19.3	1/4	C, R	H, J, K	B, D		P, R	DAL
	Resistance	Power	Term.	Char.	Resistance	Level 1	Level 2	
Part Number	Value (Ohms)	Rating (W)	Type (^)	(@)	Tolerance (%)	(FRL) (&)	(FRL) (&)	Manufacturer
RN^65@19R6%&	19.6	1/4	C, R	H, J, K	B, D, F		P, R	DAL
RN^65@19R8%&	19.8	1/4	C, R	H, J, K	B, D		P, R	DAL
RN^65@20R0%&	20.0	1/4	C, R	H, J, K	B, D, F		P, R	DAL
RN^65@20R3%&	20.3	1/4	C, R	H, J, K	B, D		P, R	DAL
RN^65@20R5%&	20.5	1/4	C, R	H, J, K	B, D, F		P, R	DAL
RN^65@20R8%&	20.8	1/4	C, R	H, J, K	B, D		P, R	DAL
RN^65@21R0%&	21.0	1/4	C, R	H, J, K	B, D, F		P, R	DAL
	Resistance	Power	Term.	Char.	Resistance	Level 1	Level 2	
Part Number	Value (Ohms)	Rating (W)	Type (^)	(@)	Tolerance (%)	(FRL) (&)	(FRL) (&)	Manufacturer
RN^65@21R3%&	21.3	1/4	C, R	H, J, K	B, D		P, R	DAL
RN^65@21R5%&	21.5	1/4	C, R	H, J, K	B, D, F		P, R	DAL
RN^65@21R8%&	21.8	1/4	C, R	H, J, K	B, D		P, R	DAL
RN^65@22R1%&	22.1	1/4	C, R	H, J, K	B, D, F		P, R	DAL
RN^65@22R3%&	22.3	1/4	C, R	H, J, K	B, D		P, R	DAL
RN^65@22R6%&	22.6	1/4	C, R	H, J, K	B, D, F		P, R	DAL
RN^65@22R9%&	22.9	1/4	C, R	H, J, K	B, D		P, R	DAL
	Resistance	Power	Term.	Char.	Resistance	Level 1	Level 2	
Part Number	Value (Ohms)	Rating (W)	Type (^)	(@)	Tolerance (%)	(FRL) (&)	(FRL) (&)	Manufacturer
RN^65@23R2%&	23.2	1/4	C, R	H, J, K	B, D, F		P, R	DAL
RN^65@23R4%&	23.4	1/4	C, R	H, J, K	B, D		P, R	DAL
RN^65@23R7%&	23.7	1/4	C, R	H, J, K	B, D, F		P, R	DAL
RN^65@24R0%&	24.0	1/4	C, R	H, J, K	B, D		P, R	DAL
RN^65@24R3%&	24.3	1/4	C, R	H, J, K	B, D, F		P, R	DAL
RN^65@24R6%&	24.6	1/4	C, N, R	H, J, K, C, E	B, D		P, R	DAL
RN^65@24R9%&	24.9	1/4	C, N, R	H, J, K, C, E	B, D, F		P, R	ANG, DAL
	Resistance	Power	Term.	Char.	Resistance	Level 1	Level 2	
Part Number	Value (Ohms)	Rating (W)	Type (^)	(@)	Tolerance (%)	(FRL) (&)	(FRL) (&)	Manufacturer
RN^65@25R2%&	25.2	1/4	C, N, R	H, J, K, C, E	B, D		P, R	ANG, DAL
RN^65@25R5%&	25.5	1/4	C, N, R	H, J, K, C, E	B, D, F		P, R	ANG, DAL
RN^65@25R8%&	25.8	1/4	C, N, R	H, J, K, C, E	B, D		P, R	ANG, DAL
RN^65@26R1%&	26.1	1/4	C, N, R	H, J, K, C, E	B, D, F		P, R	ANG, DAL
RN^65@26R4%&	26.4	1/4	C, N, R	H, J, K, C, E	B, D		P, R	ANG, DAL
RN^65@26R7%&	26.7	1/4	C, N, R	H, J, K, C, E	B, D, F		P, R	ANG, DAL
RN^65@27R1%&	27.1	1/4	C, N, R	H, J, K, C, E	B, D		P, R	ANG, DAL
	Resistance	Power	Term.	Char.	Resistance	Level 1	Level 2	
Part Number	Value (Ohms)	Rating (W)	Type (^)	(@)	Tolerance (%)	(FRL) (&)	(FRL) (&)	Manufacturer
RN^65@27R4%&	27.4	1/4	C, N, R	H, J, K, C, E	B, D, F		P, R	ANG, DAL
RN^65@27R7%&	27.7	1/4	C, N, R	H, J, K, C, E	B, D		P, R	ANG, DAL
RN^65@28R0%&	28.0	1/4	C, N, R	H, J, K, C, E	B, D, F		P, R	ANG, DAL
RN^65@28R4%&	28.4	1/4	C, N, R	H, J, K, C, E	B, D		P, R	ANG, DAL
RN^65@28R7%&	28.7	1/4	C, N, R	H, J, K, C, E	B, D, F		P, R	ANG, DAL
RN^65@29R1%&	29.1	1/4	C, N, R	H, J, K, C, E	B, D		P, R	ANG, DAL
RN^65@29R4%&	29.4	1/4	C, N, R	H, J, K, C, E	B, D, F		P, R	ANG, DAL
	Resistance	Power	Term.	Char.	Resistance	Level 1	Level 2	

Part Number	Value (Ohms)	Rating (W)	Type (^)	(@)	Tolerance (%)	(FRL) (&)	(FRL) (&)	Manufacturer
RN^65@29R8%&	29.8	1/4	C, N, R	H, J, K, C, E	B, D		P, R	ANG, DAL
RN^65@30R1%&	30.1	1/4	C, N, R	H, J, K, C, E	B, D, F		P, R	ANG, DAL
RN^65@30R5%&	30.5	1/4	C, N, R	H, J, K, C, E	B, D		P, R	ANG, DAL
RN^65@30R9%&	30.9	1/4	C, N, R	H, J, K, C, E	B, D, F		P, R	ANG, DAL
RN^65@31R2%&	31.2	1/4	C, N, R	H, J, K, C, E	B, D		P, R	ANG, DAL
RN^65@31R6%&	31.6	1/4	C, N, R	H, J, K, C, E	B, D, F		P, R	ANG, DAL
RN^65@32R0%&	32.0	1/4	C, N, R	H, J, K, C, E	B, D		P, R	ANG, DAL
	Resistance	Power	Term.	Char.	Resistance	Level 1	Level 2	
Part Number	Value (Ohms)	Rating (W)	Type (^)	(@)	Tolerance (%)	(FRL) (&)	(FRL) (&)	Manufacturer
RN^65@32R4%&	32.4	1/4	C, N, R	H, J, K, C, E	B, D, F		P, R	ANG, DAL
RN^65@32R8%&	32.8	1/4	C, N, R	H, J, K, C, E	B, D		P, R	ANG, DAL
RN^65@33R2%&	33.2	1/4	C, N, R	H, J, K, C, E	B, D, F		P, R	ANG, DAL
RN^65@33R6%&	33.6	1/4	C, N, R	H, J, K, C, E	B, D		P, R	ANG, DAL
RN^65@34R0%&	34.0	1/4	C, N, R	H, J, K, C, E	B, D, F		P, R	ANG, DAL
RN^65@34R4%&	34.4	1/4	C, N, R	H, J, K, C, E	B, D		P, R	ANG, DAL
RN^65@34R8%&	34.8	1/4	C, N, R	H, J, K, C, E	B, D, F		P, R	ANG, DAL
	Resistance	Power	Term.	Char.	Resistance	Level 1	Level 2	
Part Number	Value (Ohms)	Rating (W)	Type (^)	(@)	Tolerance (%)	(FRL) (&)	(FRL) (&)	Manufacturer
RN^65@35R2%&	35.2	1/4	C, N, R	H, J, K, C, E	B, D		P, R	ANG, DAL
RN^65@35R7%&	35.7	1/4	C, N, R	H, J, K, C, E	B, D, F		P, R	ANG, DAL
RN^65@36R1%&	36.1	1/4	C, N, R	H, J, K, C, E	B, D		P, R	ANG, DAL
RN^65@36R5%&	36.5	1/4	C, N, R	H, J, K, C, E	B, D, F		P, R	ANG, DAL
RN^65@37R0%&	37.0	1/4	C, N, R	H, J, K, C, E	B, D		P, R	ANG, DAL
RN^65@37R4%&	37.4	1/4	C, N, R	H, J, K, C, E	B, D, F		P, R	ANG, DAL
RN^65@37R9%&	37.9	1/4	C, N, R	H, J, K, C, E	B, D		P, R	ANG, DAL
	Resistance	Power	Term.	Char.	Resistance	Level 1	Level 2	
Part Number	Value (Ohms)	Rating (W)	Type (^)	(@)	Tolerance (%)	(FRL) (&)	(FRL) (&)	Manufacturer
RN^65@38R3%&	38.3	1/4	C, N, R	H, J, K, C, E	B, D, F		P, R	ANG, DAL
RN^65@38R8%&	38.8	1/4	C, N, R	H, J, K, C, E	B, D		P, R	ANG, DAL
RN^65@39R2%&	39.2	1/4	C, N, R	H, J, K, C, E	B, D, F		P, R	ANG, DAL
RN^65@39R7%&	39.7	1/4	C, N, R	H, J, K, C, E	B, D		P, R	ANG, DAL
RN^65@40R2%&	40.2	1/4	C, N, R	H, J, K, C, E	B, D, F		P, R	ANG, DAL
RN^65@40R7%&	40.7	1/4	C, N, R	H, J, K, C, E	B, D		P, R	ANG, DAL
RN^65@41R2%&	41.2	1/4	C, N, R	H, J, K, C, E	B, D, F		P, R	ANG, DAL
	Resistance	Power	Term.	Char.	Resistance	Level 1	Level 2	
Part Number	Value (Ohms)	Rating (W)	Type (^)	(@)	Tolerance (%)	(FRL) (&)	(FRL) (&)	Manufacturer
RN^65@41R7%&	41.7	1/4	C, N, R	H, J, K, C, E	B, D		P, R	ANG, DAL
RN^65@42R2%&	42.2	1/4	C, N, R	H, J, K, C, E	B, D, F		P, R	ANG, DAL
RN^65@42R7%&	42.7	1/4	C, N, R	H, J, K, C, E	B, D		P, R	ANG, DAL
RN^65@43R2%&	43.2	1/4	C, N, R	H, J, K, C, E	B, D, F		P, R	ANG, DAL
RN^65@43R7%&	43.7	1/4	C, N, R	H, J, K, C, E	B, D		P, R	ANG, DAL
RN^65@44R2%&	44.2	1/4	C, N, R	H, J, K, C, E	B, D, F		P, R	ANG, DAL
RN^65@44R8%&	44.8	1/4	C, N, R	H, J, K, C, E	B, D		P, R	ANG, DAL
	Resistance	Power	Term.	Char.	Resistance	Level 1	Level 2	
Part Number	Value (Ohms)	Rating (W)	Type (^)	(@)	Tolerance (%)	(FRL) (&)	(FRL) (&)	Manufacturer
RN^65@45R3%&	45.3	1/4	C, N, R	H, J, K, C, E	B, D, F		P, R	ANG, DAL

RN^65@45R9%&	45.9	1/4	C, N, R	H, J, K, C, E	B, D		P, R	ANG, DAL
RN^65@46R4%&	46.4	1/4	C, N, R	H, J, K, C, E	B, D, F		P, R	ANG, DAL
RN^65@47R0%&	47.0	1/4	C, N, R	H, J, K, C, E	B, D		P, R	ANG, DAL
RN^65@47R5%&	47.5	1/4	C, N, R	H, J, K, C, E	B, D, F		P, R	ANG, DAL
RN^65@48R1%&	48.1	1/4	C, N, R	H, J, K, C, E	B, D		P, R	ANG, DAL
RN^65@48R7%&	48.7	1/4	C, N, R	H, J, K, C, E	B, D, F		P, R	ANG, DAL
	Resistance	Power	Term.	Char.	Resistance	Level 1	Level 2	
Part Number	Value (Ohms)	Rating (W)	Type (^)	(@)	Tolerance (%)	(FRL) (&)	(FRL) (&)	Manufacturer
RN^65@49R3%&	49.3	1/4	C, N, R	H, J, K, C, E	B, D		P, R	ANG, DAL
RN^65@49R9%&	49.9	1/4	C, N, R	H, J, K, C, E	B, D, F		P, R	ANG, DAL
RN^65@50R5%&	50.5	1/4	C, N, R	H, J, K, C, E	B, D		P, R	ANG, DAL
RN^65@51R1%&	51.1	1/4	C, N, R	H, J, K, C, E	B, D, F		P, R	ANG, DAL
RN^65@51R7%&	51.7	1/4	C, N, R	H, J, K, C, E	B, D		P, R	ANG, DAL
RN^65@52R3%&	52.3	1/4	C, N, R	H, J, K, C, E	B, D, F		P, R	ANG, DAL
RN^65@53R0%&	53.0	1/4	C, N, R	H, J, K, C, E	B, D		P, R	ANG, DAL
	Resistance	Power	Term.	Char.	Resistance	Level 1	Level 2	
Part Number	Value (Ohms)	Rating (W)	Type (^)	(@)	Tolerance (%)	(FRL) (&)	(FRL) (&)	Manufacturer
RN^65@53R6%&	53.6	1/4	C, N, R	H, J, K, C, E	B, D, F		P, R	ANG, DAL
RN^65@54R2%&	54.2	1/4	C, N, R	H, J, K, C, E	B, D		P, R	ANG, DAL
RN^65@54R9%&	54.9	1/4	C, N, R	H, J, K, C, E	B, D, F		P, R	ANG, DAL
RN^65@55R6%&	55.6	1/4	C, N, R	H, J, K, C, E	B, D		P, R	ANG, DAL
RN^65@56R2%&	56.2	1/4	C, N, R	H, J, K, C, E	B, D, F		P, R	ANG, DAL
RN^65@56R9%&	56.9	1/4	C, N, R	H, J, K, C, E	B, D		P, R	ANG, DAL
RN^65@57R6%&	57.6	1/4	C, N, R	H, J, K, C, E	B, D, F		P, R	ANG, DAL
	Resistance	Power	Term.	Char.	Resistance	Level 1	Level 2	
Part Number	Value (Ohms)	Rating (W)	Type (^)	(@)	Tolerance (%)	(FRL) (&)	(FRL) (&)	Manufacturer
RN^65@58R3%&	58.3	1/4	C, N, R	H, J, K, C, E	B, D		P, R	ANG, DAL
RN^65@59R0%&	59.0	1/4	C, N, R	H, J, K, C, E	B, D, F		P, R	ANG, DAL
RN^65@59R7%&	59.7	1/4	C, N, R	H, J, K, C, E	B, D		P, R	ANG, DAL
RN^65@60R4%&	60.4	1/4	C, N, R	H, J, K, C, E	B, D, F		P, R	ANG, DAL
RN^65@61R2%&	61.2	1/4	C, N, R	H, J, K, C, E	B, D		P, R	ANG, DAL
RN^65@61R9%&	61.9	1/4	C, N, R	H, J, K, C, E	B, D, F		P, R	ANG, DAL
RN^65@62R6%&	62.6	1/4	C, N, R	H, J, K, C, E	B, D		P, R	ANG, DAL
	Resistance	Power	Term.	Char.	Resistance	Level 1	Level 2	
Part Number	Value (Ohms)	Rating (W)	Type (^)	(@)	Tolerance (%)	(FRL) (&)	(FRL) (&)	Manufacturer
RN^65@63R4%&	63.4	1/4	C, N, R	H, J, K, C, E	B, D, F		P, R	ANG, DAL
RN^65@64R2%&	64.2	1/4	C, N, R	H, J, K, C, E	B, D		P, R	ANG, DAL
RN^65@64R9%&	64.9	1/4	C, N, R	H, J, K, C, E	B, D, F		P, R	ANG, DAL
RN^65@65R7%&	65.7	1/4	C, N, R	H, J, K, C, E	B, D		P, R	ANG, DAL
RN^65@66R5%&	66.5	1/4	C, N, R	H, J, K, C, E	B, D, F		P, R	ANG, DAL
RN^65@67R3%&	67.3	1/4	C, N, R	H, J, K, C, E	B, D		P, R	ANG, DAL
RN^65@68R1%&	68.1	1/4	C, N, R	H, J, K, C, E	B, D, F		P, R	ANG, DAL
	Resistance	Power	Term.	Char.	Resistance	Level 1	Level 2	
Part Number	Value (Ohms)	Rating (W)	Type (^)	(@)	Tolerance (%)	(FRL) (&)	(FRL) (&)	Manufacturer
RN^65@69R0%&	69.0	1/4	C, N, R	H, J, K, C, E	B, D		P, R	ANG, DAL
RN^65@69R8%&	69.8	1/4	C, N, R	H, J, K, C, E	B, D, F		P, R	ANG, DAL
RN^65@70R6%&	70.6	1/4	C, N, R	H, J, K, C, E	B, D		P, R	ANG, DAL

RN^65@71R5%&	71.5	1/4	C, N, R	H, J, K, C, E	B, D, F		P, R	ANG, DAL
RN^65@72R3%&	72.3	1/4	C, N, R	H, J, K, C, E	B, D		P, R	ANG, DAL
RN^65@73R2%&	73.2	1/4	C, N, R	H, J, K, C, E	B, D, F		P, R	ANG, DAL
RN^65@74R1%&	74.1	1/4	C, N, R	H, J, K, C, E	B, D		P, R	ANG, DAL
	Resistance	Power	Term.	Char.	Resistance	Level 1	Level 2	
Part Number	Value (Ohms)	Rating (W)	Type (^)	(@)	Tolerance (%)	(FRL) (&)	(FRL) (&)	Manufacturer
RN^65@75R0%&	75.0	1/4	C, N, R	H, J, K, C, E	B, D, F		P, R	ANG, DAL
RN^65@75R9%&	75.9	1/4	C, N, R	H, J, K, C, E	B, D		P, R	ANG, DAL
RN^65@76R8%&	76.8	1/4	C, N, R	H, J, K, C, E	B, D, F		P, R	ANG, DAL
RN^65@77R7%&	77.7	1/4	C, N, R	H, J, K, C, E	B, D		P, R	ANG, DAL
RN^65@78R7%&	78.7	1/4	C, N, R	H, J, K, C, E	B, D, F		P, R	ANG, DAL
RN^65@79R6%&	79.6	1/4	C, N, R	H, J, K, C, E	B, D		P, R	ANG, DAL
RN^65@80R6%&	80.6	1/4	C, N, R	H, J, K, C, E	B, D, F		P, R	ANG, DAL
	Resistance	Power	Term.	Char.	Resistance	Level 1	Level 2	
Part Number	Value (Ohms)	Rating (W)	Type (^)	(@)	Tolerance (%)	(FRL) (&)	(FRL) (&)	Manufacturer
RN^65@81R6%&	81.6	1/4	C, N, R	H, J, K, C, E	B, D		P, R	ANG, DAL
RN^65@82R5%&	82.5	1/4	C, N, R	H, J, K, C, E	B, D, F		P, R	ANG, DAL
RN^65@83R5%&	83.5	1/4	C, N, R	H, J, K, C, E	B, D		P, R	ANG, DAL
RN^65@84R5%&	84.5	1/4	C, N, R	H, J, K, C, E	B, D, F		P, R	ANG, DAL
RN^65@85R6%&	85.6	1/4	C, N, R	H, J, K, C, E	B, D		P, R	ANG, DAL
RN^65@86R6%&	86.6	1/4	C, N, R	H, J, K, C, E	B, D, F		P, R	ANG, DAL
RN^65@87R6%&	87.6	1/4	C, N, R	H, J, K, C, E	B, D		P, R	ANG, DAL
	Resistance	Power	Term.	Char.	Resistance	Level 1	Level 2	
Part Number	Value (Ohms)	Rating (W)	Type (^)	(@)	Tolerance (%)	(FRL) (&)	(FRL) (&)	Manufacturer
RN^65@88R7%&	88.7	1/4	C, N, R	H, J, K, C, E	B, D, F		P, R	ANG, DAL
RN^65@89R8%&	89.8	1/4	C, N, R	H, J, K, C, E	B, D		P, R	ANG, DAL
RN^65@90R9%&	90.9	1/4	C, N, R	H, J, K, C, E	B, D, F		P, R	ANG, DAL
RN^65@92R0%&	92.0	1/4	C, N, R	H, J, K, C, E	B, D		P, R	ANG, DAL
RN^65@93R1%&	93.1	1/4	C, N, R	H, J, K, C, E	B, D, F		P, R	ANG, DAL
RN^65@94R2%&	94.2	1/4	C, N, R	H, J, K, C, E	B, D		P, R	ANG, DAL
RN^65@95R3%&	95.3	1/4	C, N, R	H, J, K, C, E	B, D, F		P, R	ANG, DAL
RN^65@96R5%&	96.5	1/4	C, N, R	H, J, K, C, E	B, D		P, R	ANG, DAL
RN^65@97R6%&	97.6	1/4	C, N, R	H, J, K, C, E	B, D, F		P, R	ANG, DAL
RN^65@98R8%&	98.8	1/4	C, N, R	H, J, K, C, E	B, D		P, R	ANG, DAL

RN^65 Film Resistors: 100 Ohms through 988 Ohms

	Resistance	Power	Term.	Char.	Resistance	Level 1	Level 2	
Part Number	Value (Ohms)	Rating (W)	Type (^)	(@)	Tolerance (%)	(FRL) (&)	(FRL) (&)	Manufacturer
RN^65@1000%&	100	1/4	C, N, R	H, J, K, C, E	B, D, F		P, R	ANG, DAL
RN^65@1010%&	101	1/4	C, N, R	H, J, K, C, E	B, D		P, R	ANG, DAL
RN^65@1020%&	102	1/4	C, N, R	H, J, K, C, E	B, D, F		P, R	ANG, DAL
RN^65@1040%&	104	1/4	C, N, R	H, J, K, C, E	B, D		P, R	ANG, DAL
RN^65@1050%&	105	1/4	C, N, R	H, J, K, C, E	B, D, F		P, R	ANG, DAL
RN^65@1060%&	106	1/4	C, N, R	H, J, K, C, E	B, D		P, R	ANG, DAL

RN^65@1070%&	107	1/4	C, N, R	H, J, K, C, E	B, D, F		P, R	ANG, DAL
	Resistance	Power	Term.	Char.	Resistance	Level 1	Level 2	
Part Number	Value (Ohms)	Rating (W)	Type (^)	(@)	Tolerance (%)	(FRL) (&)	(FRL) (&)	Manufacturer
RN^65@1090%&	109	1/4	C, N, R	H, J, K, C, E	B, D		P, R	ANG, DAL
RN^65@1100%&	110	1/4	C, N, R	H, J, K, C, E	B, D, F		P, R	ANG, DAL
RN^65@1110%&	111	1/4	C, N, R	H, J, K, C, E	B, D		P, R	ANG, DAL
RN^65@1130%&	113	1/4	C, N, R	H, J, K, C, E	B, D, F		P, R	ANG, DAL
RN^65@1140%&	114	1/4	C, N, R	H, J, K, C, E	B, D		P, R	ANG, DAL
RN^65@1150%&	115	1/4	C, N, R	H, J, K, C, E	B, D, F		P, R	ANG, DAL
RN^65@1170%&	117	1/4	C, N, R	H, J, K, C, E	B, D		P, R	ANG, DAL
	Resistance	Power	Term.	Char.	Resistance	Level 1	Level 2	
Part Number	Value (Ohms)	Rating (W)	Type (^)	(@)	Tolerance (%)	(FRL) (&)	(FRL) (&)	Manufacturer
RN^65@1180%&	118	1/4	C, N, R	H, J, K, C, E	B, D, F		P, R	ANG, DAL
RN^65@1200%&	120	1/4	C, N, R	H, J, K, C, E	B, D		P, R	ANG, DAL
RN^65@1210%&	121	1/4	C, N, R	H, J, K, C, E	B, D, F		P, R	ANG, DAL
RN^65@1230%&	123	1/4	C, N, R	H, J, K, C, E	B, D		P, R	ANG, DAL
RN^65@1240%&	124	1/4	C, N, R	H, J, K, C, E	B, D, F		P, R	ANG, DAL
RN^65@1260%&	126	1/4	C, N, R	H, J, K, C, E	B, D		P, R	ANG, DAL
RN^65@1270%&	127	1/4	C, N, R	H, J, K, C, E	B, D, F		P, R	ANG, DAL
	Resistance	Power	Term.	Char.	Resistance	Level 1	Level 2	
Part Number	Value (Ohms)	Rating (W)	Type (^)	(@)	Tolerance (%)	(FRL) (&)	(FRL) (&)	Manufacturer
RN^65@1290%&	129	1/4	C, N, R	H, J, K, C, E	B, D		P, R	ANG, DAL
RN^65@1300%&	130	1/4	C, N, R	H, J, K, C, E	B, D, F		P, R	ANG, DAL
RN^65@1320%&	132	1/4	C, N, R	H, J, K, C, E	B, D		P, R	ANG, DAL
RN^65@1330%&	133	1/4	C, N, R	H, J, K, C, E	B, D, F		P, R	ANG, DAL
RN^65@1350%&	135	1/4	C, N, R	H, J, K, C, E	B, D		P, R	ANG, DAL
RN^65@1370%&	137	1/4	C, N, R	H, J, K, C, E	B, D, F		P, R	ANG, DAL
RN^65@1380%&	138	1/4	C, N, R	H, J, K, C, E	B, D		P, R	ANG, DAL
	Resistance	Power	Term.	Char.	Resistance	Level 1	Level 2	
Part Number	Value (Ohms)	Rating (W)	Type (^)	(@)	Tolerance (%)	(FRL) (&)	(FRL) (&)	Manufacturer
	Resistance	Power	Term.	Char.	Resistance	Level 1	Level 2	
Part Number	Value (Ohms)	Rating (W)	Type (^)	(@)	Tolerance (%)	(FRL) (&)	(FRL) (&)	Manufacturer
RN^65@1400%&	140	1/4	C, N, R	H, J, K, C, E	B, D, F		P, R	ANG, DAL
RN^65@1420%&	142	1/4	C, N, R	H, J, K, C, E	B, D		P, R	ANG, DAL
RN^65@1430%&	143	1/4	C, N, R	H, J, K, C, E	B, D, F		P, R	ANG, DAL
RN^65@1450%&	145	1/4	C, N, R	H, J, K, C, E	B, D		P, R	ANG, DAL
RN^65@1470%&	147	1/4	C, N, R	H, J, K, C, E	B, D, F		P, R	ANG, DAL
RN^65@1490%&	149	1/4	C, N, R	H, J, K, C, E	B, D		P, R	ANG, DAL
RN^65@1500%&	150	1/4	C, N, R	H, J, K, C, E	B, D, F		P, R	ANG, DAL
	Resistance	Power	Term.	Char.	Resistance	Level 1	Level 2	
Part Number	Value (Ohms)	Rating (W)	Type (^)	(@)	Tolerance (%)	(FRL) (&)	(FRL) (&)	Manufacturer
RN^65@1520%&	152	1/4	C, N, R	H, J, K, C, E	B, D		P, R	ANG, DAL
RN^65@1540%&	154	1/4	C, N, R	H, J, K, C, E	B, D, F		P, R	ANG, DAL
RN^65@1560%&	156	1/4	C, N, R	H, J, K, C, E	B, D		P, R	ANG, DAL
RN^65@1580%&	158	1/4	C, N, R	H, J, K, C, E	B, D, F		P, R	ANG, DAL
RN^65@1600%&	160	1/4	C, N, R	H, J, K, C, E	B, D		P, R	ANG, DAL
RN^65@1620%&	162	1/4	C, N, R	H, J, K, C, E	B, D, F		P, R	ANG, DAL

RN^65@1640%&	164	1/4	C, N, R	H, J, K, C, E	B, D		P, R	ANG, DAL
	Resistance	Power	Term.	Char.	Resistance	Level 1	Level 2	
Part Number	Value (Ohms)	Rating (W)	Type (^)	(@)	Tolerance (%)	(FRL) (&)	(FRL) (&)	Manufacturer
RN^65@1650%&	165	1/4	C, N, R	H, J, K, C, E	B, D, F		P, R	ANG, DAL
RN^65@1670%&	167	1/4	C, N, R	H, J, K, C, E	B, D		P, R	ANG, DAL
RN^65@1690%&	169	1/4	C, N, R	H, J, K, C, E	B, D, F		P, R	ANG, DAL
RN^65@1720%&	172	1/4	C, N, R	H, J, K, C, E	B, D		P, R	ANG, DAL
RN^65@1740%&	174	1/4	C, N, R	H, J, K, C, E	B, D, F		P, R	ANG, DAL
RN^65@1760%&	176	1/4	C, N, R	H, J, K, C, E	B, D		P, R	ANG, DAL
RN^65@1780%&	178	1/4	C, N, R	H, J, K, C, E	B, D, F		P, R	ANG, DAL
	Resistance	Power	Term.	Char.	Resistance	Level 1	Level 2	
Part Number	Value (Ohms)	Rating (W)	Type (^)	(@)	Tolerance (%)	(FRL) (&)	(FRL) (&)	Manufacturer
RN^65@1800%&	180	1/4	C, N, R	H, J, K, C, E	B, D		P, R	ANG, DAL
RN^65@1820%&	182	1/4	C, N, R	H, J, K, C, E	B, D, F		P, R	ANG, DAL
RN^65@1840%&	184	1/4	C, N, R	H, J, K, C, E	B, D		P, R	ANG, DAL
RN^65@1870%&	187	1/4	C, N, R	H, J, K, C, E	B, D, F		P, R	ANG, DAL
RN^65@1890%&	189	1/4	C, N, R	H, J, K, C, E	B, D		P, R	ANG, DAL
RN^65@1910%&	191	1/4	C, N, R	H, J, K, C, E	B, D, F		P, R	ANG, DAL
RN^65@1930%&	193	1/4	C, N, R	H, J, K, C, E	B, D		P, R	ANG, DAL
	Resistance	Power	Term.	Char.	Resistance	Level 1	Level 2	
Part Number	Value (Ohms)	Rating (W)	Type (^)	(@)	Tolerance (%)	(FRL) (&)	(FRL) (&)	Manufacturer
RN^65@1960%&	196	1/4	C, N, R	H, J, K, C, E	B, D, F		P, R	ANG, DAL
RN^65@1980%&	198	1/4	C, N, R	H, J, K, C, E	B, D		P, R	ANG, DAL
RN^65@2000%&	200	1/4	C, N, R	H, J, K, C, E	B, D, F	S	P, R	ANG,DAL
RN^65@2030%&	203	1/4	C, N, R	H, J, K, C, E	B, D	S	P, R	ANG,DAL
RN^65@2050%&	205	1/4	C, N, R	H, J, K, C, E	B, D, F	S	P, R	ANG,DAL
RN^65@2080%&	208	1/4	C, N, R	H, J, K, C, E	B, D	S	P, R	ANG,DAL
RN^65@2100%&	210	1/4	C, N, R	H, J, K, C, E	B, D, F	S	P, R	ANG,DAL
	Resistance	Power	Term.	Char.	Resistance	Level 1	Level 2	
Part Number	Value (Ohms)	Rating (W)	Type (^)	(@)	Tolerance (%)	(FRL) (&)	(FRL) (&)	Manufacturer
RN^65@2130%&	213	1/4	C, N, R	H, J, K, C, E	B, D	S	P, R	ANG,DAL
RN^65@2150%&	215	1/4	C, N, R	H, J, K, C, E	B, D, F	S	P, R	ANG,DAL
RN^65@2180%&	218	1/4	C, N, R	H, J, K, C, E	B, D	S	P, R	ANG,DAL
RN^65@2210%&	221	1/4	C, N, R	H, J, K, C, E	B, D, F	S	P, R	ANG,DAL
RN^65@2230%&	223	1/4	C, N, R	H, J, K, C, E	B, D	S	P, R	ANG,DAL
RN^65@2260%&	226	1/4	C, N, R	H, J, K, C, E	B, D, F	S	P, R	ANG,DAL
RN^65@2290%&	229	1/4	C, N, R	H, J, K, C, E	B, D	S	P, R	ANG,DAL
	Resistance	Power	Term.	Char.	Resistance	Level 1	Level 2	
Part Number	Value (Ohms)	Rating (W)	Type (^)	(@)	Tolerance (%)	(FRL) (&)	(FRL) (&)	Manufacturer
RN^65@2320%&	232	1/4	C, N, R	H, J, K, C, E	B, D, F	S	P, R	ANG,DAL
RN^65@2340%&	234	1/4	C, N, R	H, J, K, C, E	B, D	S	P, R	ANG,DAL
RN^65@2370%&	237	1/4	C, N, R	H, J, K, C, E	B, D, F	S	P, R	ANG,DAL
RN^65@2400%&	240	1/4	C, N, R	H, J, K, C, E	B, D	S	P, R	ANG,DAL
RN^65@2430%&	243	1/4	C, N, R	H, J, K, C, E	B, D, F	S	P, R	ANG,DAL
RN^65@2460%&	246	1/4	C, N, R	H, J, K, C, E	B, D	S	P, R	ANG,DAL
RN^65@2490%&	249	1/4	C, N, R	H, J, K, C, E	B, D, F	S	P, R	ANG,DAL
	Resistance	Power	Term.	Char.	Resistance	Level 1	Level 2	

Part Number	Value (Ohms)	Rating (W)	Type (^)	(@)	Tolerance (%)	(FRL) (&)	(FRL) (&)	Manufacturer
RN^65@2520%&	252	1/4	C, N, R	H, J, K, C, E	B, D	S	P, R	ANG,DAL
RN^65@2550%&	255	1/4	C, N, R	H, J, K, C, E	B, D, F	S	P, R	ANG,DAL
RN^65@2580%&	258	1/4	C, N, R	H, J, K, C, E	B, D	S	P, R	ANG,DAL
RN^65@2610%&	261	1/4	C, N, R	H, J, K, C, E	B, D, F	S	P, R	ANG,DAL
RN^65@2640%&	264	1/4	C, N, R	H, J, K, C, E	B, D	S	P, R	ANG,DAL
RN^65@2670%&	267	1/4	C, N, R	H, J, K, C, E	B, D, F	S	P, R	ANG,DAL
RN^65@2710%&	271	1/4	C, N, R	H, J, K, C, E	B, D	S	P, R	ANG,DAL
	Resistance	Power	Term.	Char.	Resistance	Level 1	Level 2	
Part Number	Value (Ohms)	Rating (W)	Type (^)	(@)	Tolerance (%)	(FRL) (&)	(FRL) (&)	Manufacturer
RN^65@2740%&	274	1/4	C, N, R	H, J, K, C, E	B, D, F	S	P, R	ANG,DAL
RN^65@2770%&	277	1/4	C, N, R	H, J, K, C, E	B, D	S	P, R	ANG,DAL
RN^65@2800%&	280	1/4	C, N, R	H, J, K, C, E	B, D, F	S	P, R	ANG,DAL
RN^65@2840%&	284	1/4	C, N, R	H, J, K, C, E	B, D	S	P, R	ANG,DAL
RN^65@2870%&	287	1/4	C, N, R	H, J, K, C, E	B, D, F	S	P, R	ANG,DAL
RN^65@2910%&	291	1/4	C, N, R	H, J, K, C, E	B, D	S	P, R	ANG,DAL
RN^65@2940%&	294	1/4	C, N, R	H, J, K, C, E	B, D, F	S	P, R	ANG,DAL
	Resistance	Power	Term.	Char.	Resistance	Level 1	Level 2	
Part Number	Value (Ohms)	Rating (W)	Type (^)	(@)	Tolerance (%)	(FRL) (&)	(FRL) (&)	Manufacturer
RN^65@2980%&	298	1/4	C, N, R	H, J, K, C, E	B, D	S	P, R	ANG,DAL
RN^65@3010%&	301	1/4	C, N, R	H, J, K, C, E	B, D, F	S	P, R	ANG,DAL
RN^65@3050%&	305	1/4	C, N, R	H, J, K, C, E	B, D	S	P, R	ANG,DAL
RN^65@3090%&	309	1/4	C, N, R	H, J, K, C, E	B, D, F	S	P, R	ANG,DAL
RN^65@3120%&	312	1/4	C, N, R	H, J, K, C, E	B, D	S	P, R	ANG,DAL
RN^65@3160%&	316	1/4	C, N, R	H, J, K, C, E	B, D, F	S	P, R	ANG,DAL
RN^65@3200%&	320	1/4	C, N, R	H, J, K, C, E	B, D	S	P, R	ANG,DAL
	Resistance	Power	Term.	Char.	Resistance	Level 1	Level 2	
Part Number	Value (Ohms)	Rating (W)	Type (^)	(@)	Tolerance (%)	(FRL) (&)	(FRL) (&)	Manufacturer
RN^65@3240%&	324	1/4	C, N, R	H, J, K, C, E	B, D, F	S	P, R	ANG,DAL
RN^65@3280%&	328	1/4	C, N, R	H, J, K, C, E	B, D	S	P, R	ANG,DAL
RN^65@3320%&	332	1/4	C, N, R	H, J, K, C, E	B, D, F	S	P, R	ANG,DAL
RN^65@3360%&	336	1/4	C, N, R	H, J, K, C, E	B, D	S	P, R	ANG,DAL
RN^65@3400%&	340	1/4	C, N, R	H, J, K, C, E	B, D, F	S	P, R	ANG,DAL
RN^65@3440%&	344	1/4	C, N, R	H, J, K, C, E	B, D	S	P, R	ANG,DAL
RN^65@3480%&	348	1/4	C, N, R	H, J, K, C, E	B, D, F	S	P, R	ANG,DAL
	Resistance	Power	Term.	Char.	Resistance	Level 1	Level 2	
Part Number	Value (Ohms)	Rating (W)	Type (^)	(@)	Tolerance (%)	(FRL) (&)	(FRL) (&)	Manufacturer
RN^65@3520%&	352	1/4	C, N, R	H, J, K, C, E	B, D	S	P, R	ANG,DAL
RN^65@3570%&	357	1/4	C, N, R	H, J, K, C, E	B, D, F	S	P, R	ANG,DAL
RN^65@3610%&	361	1/4	C, N, R	H, J, K, C, E	B, D	S	P, R	ANG,DAL
RN^65@3650%&	365	1/4	C, N, R	H, J, K, C, E	B, D, F	S	P, R	ANG,DAL
RN^65@3700%&	370	1/4	C, N, R	H, J, K, C, E	B, D	S	P, R	ANG,DAL
RN^65@3740%&	374	1/4	C, N, R	H, J, K, C, E	B, D, F	S	P, R	ANG,DAL
RN^65@3790%&	379	1/4	C, N, R	H, J, K, C, E	B, D	S	P, R	ANG,DAL
	Resistance	Power	Term.	Char.	Resistance	Level 1	Level 2	
Part Number	Value (Ohms)	Rating (W)	Type (^)	(@)	Tolerance (%)	(FRL) (&)	(FRL) (&)	Manufacturer
RN^65@3830%&	383	1/4	C, N, R	H, J, K, C, E	B, D, F	S	P, R	ANG,DAL

RN^65@3880%&	388	1/4	C, N, R	H, J, K, C, E	B, D	S	P, R	ANG,DAL
RN^65@3920%&	392	1/4	C, N, R	H, J, K, C, E	B, D, F	S	P, R	ANG,DAL
RN^65@3970%&	397	1/4	C, N, R	H, J, K, C, E	B, D	S	P, R	ANG,DAL
RN^65@4020%&	402	1/4	C, N, R	H, J, K, C, E	B, D, F	S	P, R	ANG,DAL
RN^65@4070%&	407	1/4	C, N, R	H, J, K, C, E	B, D	S	P, R	ANG,DAL
RN^65@4120%&	412	1/4	C, N, R	H, J, K, C, E	B, D, F	S	P, R	ANG,DAL
	Resistance	Power	Term.	Char.	Resistance	Level 1	Level 2	
Part Number	Value (Ohms)	Rating (W)	Type (^)	(@)	Tolerance (%)	(FRL) (&)	(FRL) (&)	Manufacturer
RN^65@4170%&	417	1/4	C, N, R	H, J, K, C, E	B, D	S	P, R	ANG,DAL
RN^65@4220%&	422	1/4	C, N, R	H, J, K, C, E	B, D, F	S	P, R	ANG,DAL
RN^65@4270%&	427	1/4	C, N, R	H, J, K, C, E	B, D	S	P, R	ANG,DAL
RN^65@4320%&	432	1/4	C, N, R	H, J, K, C, E	B, D, F	S	P, R	ANG,DAL
RN^65@4370%&	437	1/4	C, N, R	H, J, K, C, E	B, D	S	P, R	ANG,DAL
RN^65@4420%&	442	1/4	C, N, R	H, J, K, C, E	B, D, F	S	P, R	ANG,DAL
RN^65@4480%&	448	1/4	C, N, R	H, J, K, C, E	B, D	S	P, R	ANG,DAL
	Resistance	Power	Term.	Char.	Resistance	Level 1	Level 2	
Part Number	Value (Ohms)	Rating (W)	Type (^)	(@)	Tolerance (%)	(FRL) (&)	(FRL) (&)	Manufacturer
RN^65@4530%&	453	1/4	C, N, R	H, J, K, C, E	B, D, F	S	P, R	ANG,DAL
RN^65@4590%&	459	1/4	C, N, R	H, J, K, C, E	B, D	S	P, R	ANG,DAL
RN^65@4640%&	464	1/4	C, N, R	H, J, K, C, E	B, D, F	S	P, R	ANG,DAL
RN^65@4700%&	470	1/4	C, N, R	H, J, K, C, E	B, D	S	P, R	ANG,DAL
RN^65@4750%&	475	1/4	C, N, R	H, J, K, C, E	B, D, F	S	P, R	ANG,DAL
RN^65@4810%&	481	1/4	C, N, R	H, J, K, C, E	B, D	S	P, R	ANG,DAL
RN^65@4870%&	487	1/4	C, N, R	H, J, K, C, E	B, D, F	S	P, R	ANG,DAL
	Resistance	Power	Term.	Char.	Resistance	Level 1	Level 2	
Part Number	Value (Ohms)	Rating (W)	Type (^)	(@)	Tolerance (%)	(FRL) (&)	(FRL) (&)	Manufacturer
RN^65@4930%&	493	1/4	C, N, R	H, J, K, C, E	B, D	S	P, R	ANG,DAL
RN^65@4990%&	499	1/4	C, N, R	H, J, K, C, E	B, D, F	S	P, R	ANG,DAL
RN^65@5050%&	505	1/4	C, N, R	H, J, K, C, E	B, D	S	P, R	ANG,DAL
RN^65@5110%&	511	1/4	C, N, R	H, J, K, C, E	B, D, F	S	P, R	ANG,DAL
RN^65@5170%&	517	1/4	C, N, R	H, J, K, C, E	B, D	S	P, R	ANG,DAL
RN^65@5230%&	523	1/4	C, N, R	H, J, K, C, E	B, D, F	S	P, R	ANG,DAL
RN^65@5300%&	530	1/4	C, N, R	H, J, K, C, E	B, D	S	P, R	ANG,DAL
	Resistance	Power	Term.	Char.	Resistance	Level 1	Level 2	
Part Number	Value (Ohms)	Rating (W)	Type (^)	(@)	Tolerance (%)	(FRL) (&)	(FRL) (&)	Manufacturer
RN^65@5360%&	536	1/4	C, N, R	H, J, K, C, E	B, D, F	S	P, R	ANG,DAL
RN^65@5420%&	542	1/4	C, N, R	H, J, K, C, E	B, D	S	P, R	ANG,DAL
RN^65@5490%&	549	1/4	C, N, R	H, J, K, C, E	B, D, F	S	P, R	ANG,DAL
RN^65@5560%&	556	1/4	C, N, R	H, J, K, C, E	B, D	S	P, R	ANG,DAL
RN^65@5620%&	562	1/4	C, N, R	H, J, K, C, E	B, D, F	S	P, R	ANG,DAL
RN^65@5690%&	569	1/4	C, N, R	H, J, K, C, E	B, D	S	P, R	ANG,DAL
RN^65@5760%&	576	1/4	C, N, R	H, J, K, C, E	B, D, F	S	P, R	ANG,DAL
	Resistance	Power	Term.	Char.	Resistance	Level 1	Level 2	
Part Number	Value (Ohms)	Rating (W)	Type (^)	(@)	Tolerance (%)	(FRL) (&)	(FRL) (&)	Manufacturer
RN^65@5830%&	583	1/4	C, N, R	H, J, K, C, E	B, D	S	P, R	ANG,DAL
RN^65@5900%&	590	1/4	C, N, R	H, J, K, C, E	B, D, F	S	P, R	ANG,DAL
RN^65@5970%&	597	1/4	C, N, R	H, J, K, C, E	B, D	S	P, R	ANG,DAL

RN^65@6040%&	604	1/4	C, N, R	H, J, K, C, E	B, D, F	S	P, R	ANG,DAL
RN^65@6120%&	612	1/4	C, N, R	H, J, K, C, E	B, D	S	P, R	ANG,DAL
RN^65@6190%&	619	1/4	C, N, R	H, J, K, C, E	B, D, F	S	P, R	ANG,DAL
RN^65@6260%&	626	1/4	C, N, R	H, J, K, C, E	B, D	S	P, R	ANG,DAL
	Resistance	Power	Term.	Char.	Resistance	Level 1	Level 2	
Part Number	Value (Ohms)	Rating (W)	Type (^)	(@)	Tolerance (%)	(FRL) (&)	(FRL) (&)	Manufacturer
RN^65@6340%&	634	1/4	C, N, R	H, J, K, C, E	B, D, F	S	P, R	ANG,DAL
RN^65@6420%&	642	1/4	C, N, R	H, J, K, C, E	B, D	S	P, R	ANG,DAL
RN^65@6490%&	649	1/4	C, N, R	H, J, K, C, E	B, D, F	S	P, R	ANG,DAL
RN^65@6570%&	657	1/4	C, N, R	H, J, K, C, E	B, D	S	P, R	ANG,DAL
RN^65@6650%&	665	1/4	C, N, R	H, J, K, C, E	B, D, F	S	P, R	ANG,DAL
RN^65@6730%&	673	1/4	C, N, R	H, J, K, C, E	B, D	S	P, R	ANG,DAL
RN^65@6810%&	681	1/4	C, N, R	H, J, K, C, E	B, D, F	S	P, R	ANG,DAL
	Resistance	Power	Term.	Char.	Resistance	Level 1	Level 2	
Part Number	Value (Ohms)	Rating (W)	Type (^)	(@)	Tolerance (%)	(FRL) (&)	(FRL) (&)	Manufacturer
RN^65@6900%&	690	1/4	C, N, R	H, J, K, C, E	B, D	S	P, R	ANG,DAL
RN^65@6980%&	698	1/4	C, N, R	H, J, K, C, E	B, D, F	S	P, R	ANG,DAL
RN^65@7060%&	706	1/4	C, N, R	H, J, K, C, E	B, D	S	P, R	ANG,DAL
RN^65@7150%&	715	1/4	C, N, R	H, J, K, C, E	B, D, F	S	P, R	ANG,DAL
RN^65@7230%&	723	1/4	C, N, R	H, J, K, C, E	B, D	S	P, R	ANG,DAL
RN^65@7320%&	732	1/4	C, N, R	H, J, K, C, E	B, D, F	S	P, R	ANG,DAL
RN^65@7410%&	741	1/4	C, N, R	H, J, K, C, E	B, D	S	P, R	ANG,DAL
	Resistance	Power	Term.	Char.	Resistance	Level 1	Level 2	
Part Number	Value (Ohms)	Rating (W)	Type (^)	(@)	Tolerance (%)	(FRL) (&)	(FRL) (&)	Manufacturer
RN^65@7500%&	750	1/4	C, N, R	H, J, K, C, E	B, D, F	S	P, R	ANG,DAL
RN^65@7590%&	759	1/4	C, N, R	H, J, K, C, E	B, D	S	P, R	ANG,DAL
RN^65@7680%&	768	1/4	C, N, R	H, J, K, C, E	B, D, F	S	P, R	ANG,DAL
RN^65@7770%&	777	1/4	C, N, R	H, J, K, C, E	B, D	S	P, R	ANG,DAL
RN^65@7870%&	787	1/4	C, N, R	H, J, K, C, E	B, D, F	S	P, R	ANG,DAL
RN^65@7960%&	796	1/4	C, N, R	H, J, K, C, E	B, D	S	P, R	ANG,DAL
RN^65@8060%&	806	1/4	C, N, R	H, J, K, C, E	B, D, F	S	P, R	ANG,DAL
	Resistance	Power	Term.	Char.	Resistance	Level 1	Level 2	
Part Number	Value (Ohms)	Rating (W)	Type (^)	(@)	Tolerance (%)	(FRL) (&)	(FRL) (&)	Manufacturer
RN^65@8160%&	816	1/4	C, N, R	H, J, K, C, E	B, D	S	P, R	ANG,DAL
RN^65@8250%&	825	1/4	C, N, R	H, J, K, C, E	B, D, F	S	P, R	ANG,DAL
RN^65@8350%&	835	1/4	C, N, R	H, J, K, C, E	B, D	S	P, R	ANG,DAL
RN^65@8450%&	845	1/4	C, N, R	H, J, K, C, E	B, D, F	S	P, R	ANG,DAL
RN^65@8560%&	856	1/4	C, N, R	H, J, K, C, E	B, D	S	P, R	ANG,DAL
RN^65@8660%&	866	1/4	C, N, R	H, J, K, C, E	B, D, F	S	P, R	ANG,DAL
RN^65@8760%&	876	1/4	C, N, R	H, J, K, C, E	B, D	S	P, R	ANG,DAL
	Resistance	Power	Term.	Char.	Resistance	Level 1	Level 2	
Part Number	Value (Ohms)	Rating (W)	Type (^)	(@)	Tolerance (%)	(FRL) (&)	(FRL) (&)	Manufacturer
RN^65@8870%&	887	1/4	C, N, R	H, J, K, C, E	B, D, F	S	P, R	ANG,DAL
RN^65@8980%&	898	1/4	C, N, R	H, J, K, C, E	B, D	S	P, R	ANG,DAL
RN^65@9090%&	909	1/4	C, N, R	H, J, K, C, E	B, D, F	S	P, R	ANG,DAL
RN^65@9200%&	920	1/4	C, N, R	H, J, K, C, E	B, D	S	P, R	ANG,DAL
RN^65@9310%&	931	1/4	C, N, R	H, J, K, C, E	B, D, F	S	P, R	ANG,DAL

RN^65@9420%&	942	1/4	C, N, R	H, J, K, C, E	B, D	S	P, R	ANG,DAL
RN^65@9530%&	953	1/4	C, N, R	H, J, K, C, E	B, D, F	S	P, R	ANG,DAL
RN^65@9650%&	965	1/4	C, N, R	H, J, K, C, E	B, D	S	P, R	ANG,DAL
RN^65@9760%&	976	1/4	C, N, R	H, J, K, C, E	B, D, F	S	P, R	ANG,DAL
RN^65@9880%&	988	1/4	C, N, R	H, J, K, C, E	B, D	S	P, R	ANG,DAL

RN^65 Film Resistors: 1,000 Ohms through 9,880 Ohms

	Resistance	Power	Term.	Char.	Resistance	Level 1	Level 2	
Part Number	Value (Ohms)	Rating (W)	Type (^)	(@)	Tolerance (%)	(FRL) (&)	(FRL) (&)	Manufacturer
RN^65@1001%&	1,000	1/4	C, N, R	H, J, K, C, E	B, D, F	S	P, R	ANG,DAL
RN^65@1011%&	1,010	1/4	C, N, R	H, J, K, C, E	B, D	S	P, R	ANG,DAL
RN^65@1021%&	1,020	1/4	C, N, R	H, J, K, C, E	B, D, F	S	P, R	ANG,DAL
RN^65@1041%&	1,040	1/4	C, N, R	H, J, K, C, E	B, D	S	P, R	ANG,DAL
RN^65@1051%&	1,050	1/4	C, N, R	H, J, K, C, E	B, D, F	S	P, R	ANG,DAL
RN^65@1061%&	1,060	1/4	C, N, R	H, J, K, C, E	B, D	S	P, R	ANG,DAL
RN^65@1071%&	1,070	1/4	C, N, R	H, J, K, C, E	B, D, F	S	P, R	ANG,DAL
	Resistance	Power	Term.	Char.	Resistance	Level 1	Level 2	
Part Number	Value (Ohms)	Rating (W)	Type (^)	(@)	Tolerance (%)	(FRL) (&)	(FRL) (&)	Manufacturer
RN^65@1091%&	1,090	1/4	C, N, R	H, J, K, C, E	B, D	S	P, R	ANG,DAL
RN^65@1101%&	1,100	1/4	C, N, R	H, J, K, C, E	B, D, F	S	P, R	ANG,DAL
RN^65@1111%&	1,110	1/4	C, N, R	H, J, K, C, E	B, D	S	P, R	ANG,DAL
RN^65@1131%&	1,130	1/4	C, N, R	H, J, K, C, E	B, D, F	S	P, R	ANG,DAL
RN^65@1141%&	1,140	1/4	C, N, R	H, J, K, C, E	B, D	S	P, R	ANG,DAL
RN^65@1151%&	1,150	1/4	C, N, R	H, J, K, C, E	B, D, F	S	P, R	ANG,DAL
RN^65@1171%&	1,170	1/4	C, N, R	H, J, K, C, E	B, D	S	P, R	ANG,DAL
	Resistance	Power	Term.	Char.	Resistance	Level 1	Level 2	
Part Number	Value (Ohms)	Rating (W)	Type (^)	(@)	Tolerance (%)	(FRL) (&)	(FRL) (&)	Manufacturer
RN^65@1181%&	1,180	1/4	C, N, R	H, J, K, C, E	B, D, F	S	P, R	ANG,DAL
RN^65@1201%&	1,200	1/4	C, N, R	H, J, K, C, E	B, D	S	P, R	ANG,DAL
RN^65@1211%&	1,210	1/4	C, N, R	H, J, K, C, E	B, D, F	S	P, R	ANG,DAL
RN^65@1231%&	1,230	1/4	C, N, R	H, J, K, C, E	B, D	S	P, R	ANG,DAL
RN^65@1241%&	1,240	1/4	C, N, R	H, J, K, C, E	B, D, F	S	P, R	ANG,DAL
RN^65@1261%&	1,260	1/4	C, N, R	H, J, K, C, E	B, D	S	P, R	ANG,DAL
RN^65@1271%&	1,270	1/4	C, N, R	H, J, K, C, E	B, D, F	S	P, R	ANG,DAL
	Resistance	Power	Term.	Char.	Resistance	Level 1	Level 2	
Part Number	Value (Ohms)	Rating (W)	Type (^)	(@)	Tolerance (%)	(FRL) (&)	(FRL) (&)	Manufacturer
RN^65@1291%&	1,290	1/4	C, N, R	H, J, K, C, E	B, D	S	P, R	ANG,DAL
RN^65@1301%&	1,300	1/4	C, N, R	H, J, K, C, E	B, D, F	S	P, R	ANG,DAL
RN^65@1321%&	1,320	1/4	C, N, R	H, J, K, C, E	B, D	S	P, R	ANG,DAL
RN^65@1331%&	1,330	1/4	C, N, R	H, J, K, C, E	B, D, F	S	P, R	ANG,DAL
RN^65@1351%&	1,350	1/4	C, N, R	H, J, K, C, E	B, D	S	P, R	ANG,DAL
RN^65@1371%&	1,370	1/4	C, N, R	H, J, K, C, E	B, D, F	S	P, R	ANG,DAL
RN^65@1381%&	1,380	1/4	C, N, R	H, J, K, C, E	B, D	S	P, R	ANG,DAL
	Resistance	Power	Term.	Char.	Resistance	Level 1	Level 2	

Part Number	Value (Ohms)	Rating (W)	Type (^)	(@)	Tolerance (%)	(FRL) (&)	(FRL) (&)	Manufacturer
RN^65@1401%&	1,400	1/4	C, N, R	H, J, K, C, E	B, D, F	S	P, R	ANG,DAL
RN^65@1421%&	1,420	1/4	C, N, R	H, J, K, C, E	B, D	S	P, R	ANG,DAL
RN^65@1431%&	1,430	1/4	C, N, R	H, J, K, C, E	B, D, F	S	P, R	ANG,DAL
RN^65@1451%&	1,450	1/4	C, N, R	H, J, K, C, E	B, D	S	P, R	ANG,DAL
RN^65@1471%&	1,470	1/4	C, N, R	H, J, K, C, E	B, D, F	S	P, R	ANG,DAL
RN^65@1491%&	1,490	1/4	C, N, R	H, J, K, C, E	B, D	S	P, R	ANG,DAL
RN^65@1501%&	1,500	1/4	C, N, R	H, J, K, C, E	B, D, F	S	P, R	ANG,DAL
	Resistance	Power	Term.	Char.	Resistance	Level 1	Level 2	
Part Number	Value (Ohms)	Rating (W)	Type (^)	(@)	Tolerance (%)	(FRL) (&)	(FRL) (&)	Manufacturer
RN^65@1521%&	1,520	1/4	C, N, R	H, J, K, C, E	B, D	S	P, R	ANG,DAL
RN^65@1541%&	1,540	1/4	C, N, R	H, J, K, C, E	B, D, F	S	P, R	ANG,DAL
RN^65@1561%&	1,560	1/4	C, N, R	H, J, K, C, E	B, D	S	P, R	ANG,DAL
RN^65@1581%&	1,580	1/4	C, N, R	H, J, K, C, E	B, D, F	S	P, R	ANG,DAL
RN^65@1601%&	1,600	1/4	C, N, R	H, J, K, C, E	B, D	S	P, R	ANG,DAL
RN^65@1621%&	1,620	1/4	C, N, R	H, J, K, C, E	B, D, F	S	P, R	ANG,DAL
RN^65@1641%&	1,640	1/4	C, N, R	H, J, K, C, E	B, D	S	P, R	ANG,DAL
	Resistance	Power	Term.	Char.	Resistance	Level 1	Level 2	
Part Number	Value (Ohms)	Rating (W)	Type (^)	(@)	Tolerance (%)	(FRL) (&)	(FRL) (&)	Manufacturer
RN^65@1651%&	1,650	1/4	C, N, R	H, J, K, C, E	B, D, F	S	P, R	ANG,DAL
RN^65@1671%&	1,670	1/4	C, N, R	H, J, K, C, E	B, D	S	P, R	ANG,DAL
RN^65@1691%&	1,690	1/4	C, N, R	H, J, K, C, E	B, D, F	S	P, R	ANG,DAL
RN^65@1721%&	1,720	1/4	C, N, R	H, J, K, C, E	B, D	S	P, R	ANG,DAL
RN^65@1741%&	1,740	1/4	C, N, R	H, J, K, C, E	B, D, F	S	P, R	ANG,DAL
RN^65@1761%&	1,760	1/4	C, N, R	H, J, K, C, E	B, D	S	P, R	ANG,DAL
RN^65@1781%&	1,780	1/4	C, N, R	H, J, K, C, E	B, D, F	S	P, R	ANG,DAL
	Resistance	Power	Term.	Char.	Resistance	Level 1	Level 2	
Part Number	Value (Ohms)	Rating (W)	Type (^)	(@)	Tolerance (%)	(FRL) (&)	(FRL) (&)	Manufacturer
RN^65@1801%&	1,800	1/4	C, N, R	H, J, K, C, E	B, D	S	P, R	ANG,DAL
RN^65@1821%&	1,820	1/4	C, N, R	H, J, K, C, E	B, D, F	S	P, R	ANG,DAL
RN^65@1841%&	1,840	1/4	C, N, R	H, J, K, C, E	B, D	S	P, R	ANG,DAL
RN^65@1871%&	1,870	1/4	C, N, R	H, J, K, C, E	B, D, F	S	P, R	ANG,DAL
RN^65@1891%&	1,890	1/4	C, N, R	H, J, K, C, E	B, D	S	P, R	ANG,DAL
RN^65@1911%&	1,910	1/4	C, N, R	H, J, K, C, E	B, D, F	S	P, R	ANG,DAL
RN^65@1931%&	1,930	1/4	C, N, R	H, J, K, C, E	B, D	S	P, R	ANG,DAL
	Resistance	Power	Term.	Char.	Resistance	Level 1	Level 2	
Part Number	Value (Ohms)	Rating (W)	Type (^)	(@)	Tolerance (%)	(FRL) (&)	(FRL) (&)	Manufacturer
RN^65@1961%&	1,960	1/4	C, N, R	H, J, K, C, E	B, D, F	S	P, R	ANG,DAL
RN^65@1981%&	1,980	1/4	C, N, R	H, J, K, C, E	B, D	S	P, R	ANG,DAL
RN^65@2001%&	2,000	1/4	C, N, R	H, J, K, C, E	B, D, F	S	P, R	ANG,DAL
RN^65@2031%&	2,030	1/4	C, N, R	H, J, K, C, E	B, D	S	P, R	ANG,DAL
RN^65@2051%&	2,050	1/4	C, N, R	H, J, K, C, E	B, D, F	S	P, R	ANG,DAL
RN^65@2081%&	2,080	1/4	C, N, R	H, J, K, C, E	B, D	S	P, R	ANG,DAL
RN^65@2101%&	2,100	1/4	C, N, R	H, J, K, C, E	B, D, F	S	P, R	ANG,DAL
	Resistance	Power	Term.	Char.	Resistance	Level 1	Level 2	
Part Number	Value (Ohms)	Rating (W)	Type (^)	(@)	Tolerance (%)	(FRL) (&)	(FRL) (&)	Manufacturer
RN^65@2131%&	2,130	1/4	C, N, R	H, J, K, C, E	B, D	S	P, R	ANG,DAL

RN^65@2151%&	2,150	1/4	C, N, R	H, J, K, C, E	B, D, F	S	P, R	ANG,DAL
RN^65@2181%&	2,180	1/4	C, N, R	H, J, K, C, E	B, D	S	P, R	ANG,DAL
RN^65@2211%&	2,210	1/4	C, N, R	H, J, K, C, E	B, D, F	S	P, R	ANG,DAL
RN^65@2231%&	2,230	1/4	C, N, R	H, J, K, C, E	B, D	S	P, R	ANG,DAL
RN^65@2261%&	2,260	1/4	C, N, R	H, J, K, C, E	B, D, F	S	P, R	ANG,DAL
RN^65@2291%&	2,290	1/4	C, N, R	H, J, K, C, E	B, D	S	P, R	ANG,DAL
	Resistance	Power	Term.	Char.	Resistance	Level 1	Level 2	
Part Number	Value (Ohms)	Rating (W)	Type (^)	(@)	Tolerance (%)	(FRL) (&)	(FRL) (&)	Manufacturer
RN^65@2321%&	2,320	1/4	C, N, R	H, J, K, C, E	B, D, F	S	P, R	ANG,DAL
RN^65@2341%&	2,340	1/4	C, N, R	H, J, K, C, E	B, D	S	P, R	ANG,DAL
RN^65@2371%&	2,370	1/4	C, N, R	H, J, K, C, E	B, D, F	S	P, R	ANG,DAL
RN^65@2401%&	2,400	1/4	C, N, R	H, J, K, C, E	B, D	S	P, R	ANG,DAL
RN^65@2431%&	2,430	1/4	C, N, R	H, J, K, C, E	B, D, F	S	P, R	ANG,DAL
RN^65@2461%&	2,460	1/4	C, N, R	H, J, K, C, E	B, D	S	P, R	ANG,DAL
RN^65@2491%&	2,490	1/4	C, N, R	H, J, K, C, E	B, D, F	S	P, R	ANG,DAL
	Resistance	Power	Term.	Char.	Resistance	Level 1	Level 2	
Part Number	Value (Ohms)	Rating (W)	Type (^)	(@)	Tolerance (%)	(FRL) (&)	(FRL) (&)	Manufacturer
RN^65@2521%&	2,520	1/4	C, N, R	H, J, K, C, E	B, D	S	P, R	ANG,DAL
RN^65@2551%&	2,550	1/4	C, N, R	H, J, K, C, E	B, D, F	S	P, R	ANG,DAL
RN^65@2581%&	2,580	1/4	C, N, R	H, J, K, C, E	B, D	S	P, R	ANG,DAL
RN^65@2611%&	2,610	1/4	C, N, R	H, J, K, C, E	B, D, F	S	P, R	ANG,DAL
RN^65@2641%&	2,640	1/4	C, N, R	H, J, K, C, E	B, D	S	P, R	ANG,DAL
RN^65@2671%&	2,670	1/4	C, N, R	H, J, K, C, E	B, D, F	S	P, R	ANG,DAL
RN^65@2711%&	2,710	1/4	C, N, R	H, J, K, C, E	B, D	S	P, R	ANG,DAL
	Resistance	Power	Term.	Char.	Resistance	Level 1	Level 2	
Part Number	Value (Ohms)	Rating (W)	Type (^)	(@)	Tolerance (%)	(FRL) (&)	(FRL) (&)	Manufacturer
RN^65@2741%&	2,740	1/4	C, N, R	H, J, K, C, E	B, D, F	S	P, R	ANG,DAL
RN^65@2771%&	2,770	1/4	C, N, R	H, J, K, C, E	B, D	S	P, R	ANG,DAL
RN^65@2801%&	2,800	1/4	C, N, R	H, J, K, C, E	B, D, F	S	P, R	ANG,DAL
RN^65@2841%&	2,840	1/4	C, N, R	H, J, K, C, E	B, D	S	P, R	ANG,DAL
RN^65@2871%&	2,870	1/4	C, N, R	H, J, K, C, E	B, D, F	S	P, R	ANG,DAL
RN^65@2911%&	2,910	1/4	C, N, R	H, J, K, C, E	B, D	S	P, R	ANG,DAL
RN^65@2941%&	2,940	1/4	C, N, R	H, J, K, C, E	B, D, F	S	P, R	ANG,DAL
	Resistance	Power	Term.	Char.	Resistance	Level 1	Level 2	
Part Number	Value (Ohms)	Rating (W)	Type (^)	(@)	Tolerance (%)	(FRL) (&)	(FRL) (&)	Manufacturer
RN^65@2981%&	2,980	1/4	C, N, R	H, J, K, C, E	B, D	S	P, R	ANG,DAL
RN^65@3011%&	3,010	1/4	C, N, R	H, J, K, C, E	B, D, F	S	P, R	ANG,DAL
RN^65@3051%&	3,050	1/4	C, N, R	H, J, K, C, E	B, D	S	P, R	ANG,DAL
RN^65@3091%&	3,090	1/4	C, N, R	H, J, K, C, E	B, D, F	S	P, R	ANG,DAL
RN^65@3121%&	3,120	1/4	C, N, R	H, J, K, C, E	B, D	S	P, R	ANG,DAL
RN^65@3161%&	3,160	1/4	C, N, R	H, J, K, C, E	B, D, F	S	P, R	ANG,DAL
RN^65@3201%&	3,200	1/4	C, N, R	H, J, K, C, E	B, D	S	P, R	ANG,DAL
	Resistance	Power	Term.	Char.	Resistance	Level 1	Level 2	
Part Number	Value (Ohms)	Rating (W)	Type (^)	(@)	Tolerance (%)	(FRL) (&)	(FRL) (&)	Manufacturer
RN^65@3241%&	3,240	1/4	C, N, R	H, J, K, C, E	B, D, F	S	P, R	ANG,DAL
RN^65@3281%&	3,280	1/4	C, N, R	H, J, K, C, E	B, D	S	P, R	ANG,DAL
RN^65@3321%&	3,320	1/4	C, N, R	H, J, K, C, E	B, D, F	S	P, R	ANG,DAL

RN^65@3361%&	3,360	1/4	C, N, R	H, J, K, C, E	B, D	S	P, R	ANG,DAL
RN^65@3401%&	3,400	1/4	C, N, R	H, J, K, C, E	B, D, F	S	P, R	ANG,DAL
RN^65@3441%&	3,440	1/4	C, N, R	H, J, K, C, E	B, D	S	P, R	ANG,DAL
RN^65@3481%&	3,480	1/4	C, N, R	H, J, K, C, E	B, D, F	S	P, R	ANG,DAL
	Resistance	Power	Term.	Char.	Resistance	Level 1	Level 2	
Part Number	Value (Ohms)	Rating (W)	Type (^)	(@)	Tolerance (%)	(FRL) (&)	(FRL) (&)	Manufacturer
RN^65@3521%&	3,520	1/4	C, N, R	H, J, K, C, E	B, D	S	P, R	ANG,DAL
RN^65@3571%&	3,570	1/4	C, N, R	H, J, K, C, E	B, D, F	S	P, R	ANG,DAL
RN^65@3611%&	3,610	1/4	C, N, R	H, J, K, C, E	B, D	S	P, R	ANG,DAL
RN^65@3651%&	3,650	1/4	C, N, R	H, J, K, C, E	B, D, F	S	P, R	ANG,DAL
RN^65@3701%&	3,700	1/4	C, N, R	H, J, K, C, E	B, D	S	P, R	ANG,DAL
RN^65@3741%&	3,740	1/4	C, N, R	H, J, K, C, E	B, D, F	S	P, R	ANG,DAL
RN^65@3791%&	3,790	1/4	C, N, R	H, J, K, C, E	B, D	S	P, R	ANG,DAL
	Resistance	Power	Term.	Char.	Resistance	Level 1	Level 2	
Part Number	Value (Ohms)	Rating (W)	Type (^)	(@)	Tolerance (%)	(FRL) (&)	(FRL) (&)	Manufacturer
RN^65@3831%&	3,830	1/4	C, N, R	H, J, K, C, E	B, D, F	S	P, R	ANG,DAL
RN^65@3881%&	3,880	1/4	C, N, R	H, J, K, C, E	B, D	S	P, R	ANG,DAL
RN^65@3921%&	3,920	1/4	C, N, R	H, J, K, C, E	B, D, F	S	P, R	ANG,DAL
RN^65@3971%&	3,970	1/4	C, N, R	H, J, K, C, E	B, D	S	P, R	ANG,DAL
RN^65@4021%&	4,020	1/4	C, N, R	H, J, K, C, E	B, D, F	S	P, R	ANG,DAL
RN^65@4071%&	4,070	1/4	C, N, R	H, J, K, C, E	B, D	S	P, R	ANG,DAL
RN^65@4121%&	4,120	1/4	C, N, R	H, J, K, C, E	B, D, F	S	P, R	ANG,DAL
	Resistance	Power	Term.	Char.	Resistance	Level 1	Level 2	
Part Number	Value (Ohms)	Rating (W)	Type (^)	(@)	Tolerance (%)	(FRL) (&)	(FRL) (&)	Manufacturer
RN^65@4171%&	4,170	1/4	C, N, R	H, J, K, C, E	B, D	S	P, R	ANG,DAL
RN^65@4221%&	4,220	1/4	C, N, R	H, J, K, C, E	B, D, F	S	P, R	ANG,DAL
RN^65@4271%&	4,270	1/4	C, N, R	H, J, K, C, E	B, D	S	P, R	ANG,DAL
RN^65@4321%&	4,320	1/4	C, N, R	H, J, K, C, E	B, D, F	S	P, R	ANG,DAL
RN^65@4371%&	4,370	1/4	C, N, R	H, J, K, C, E	B, D	S	P, R	ANG,DAL
RN^65@4421%&	4,420	1/4	C, N, R	H, J, K, C, E	B, D, F	S	P, R	ANG,DAL
RN^65@4481%&	4,480	1/4	C, N, R	H, J, K, C, E	B, D	S	P, R	ANG,DAL
	Resistance	Power	Term.	Char.	Resistance	Level 1	Level 2	
Part Number	Value (Ohms)	Rating (W)	Type (^)	(@)	Tolerance (%)	(FRL) (&)	(FRL) (&)	Manufacturer
RN^65@4531%&	4,530	1/4	C, N, R	H, J, K, C, E	B, D, F	S	P, R	ANG,DAL
RN^65@4591%&	4,590	1/4	C, N, R	H, J, K, C, E	B, D	S	P, R	ANG,DAL
RN^65@4641%&	4,640	1/4	C, N, R	H, J, K, C, E	B, D, F	S	P, R	ANG,DAL
RN^65@4701%&	4,700	1/4	C, N, R	H, J, K, C, E	B, D	S	P, R	ANG,DAL
RN^65@4751%&	4,750	1/4	C, N, R	H, J, K, C, E	B, D, F	S	P, R	ANG,DAL
RN^65@4811%&	4,810	1/4	C, N, R	H, J, K, C, E	B, D	S	P, R	ANG,DAL
RN^65@4871%&	4,870	1/4	C, N, R	H, J, K, C, E	B, D, F	S	P, R	ANG,DAL
	Resistance	Power	Term.	Char.	Resistance	Level 1	Level 2	
Part Number	Value (Ohms)	Rating (W)	Type (^)	(@)	Tolerance (%)	(FRL) (&)	(FRL) (&)	Manufacturer
RN^65@4931%&	4,930	1/4	C, N, R	H, J, K, C, E	B, D	S	P, R	ANG,DAL
RN^65@4991%&	4,990	1/4	C, N, R	H, J, K, C, E	B, D, F	S	P, R	ANG,DAL
RN^65@5051%&	5,050	1/4	C, N, R	H, J, K, C, E	B, D	S	P, R	ANG,DAL
RN^65@5111%&	5,110	1/4	C, N, R	H, J, K, C, E	B, D, F	S	P, R	ANG,DAL
RN^65@5171%&	5,170	1/4	C, N, R	H, J, K, C, E	B, D	S	P, R	ANG,DAL

RN^65@5231%&	5,230	1/4	C, N, R	H, J, K, C, E	B, D, F	S	P, R	ANG,DAL
RN^65@5301%&	5,300	1/4	C, N, R	H, J, K, C, E	B, D	S	P, R	ANG,DAL
	Resistance	Power	Term.	Char.	Resistance	Level 1	Level 2	
Part Number	Value (Ohms)	Rating (W)	Type (^)	(@)	Tolerance (%)	(FRL) (&)	(FRL) (&)	Manufacturer
RN^65@5361%&	5,360	1/4	C, N, R	H, J, K, C, E	B, D, F	S	P, R	ANG,DAL
RN^65@5421%&	5,420	1/4	C, N, R	H, J, K, C, E	B, D	S	P, R	ANG,DAL
RN^65@5491%&	5,490	1/4	C, N, R	H, J, K, C, E	B, D, F	S	P, R	ANG,DAL
RN^65@5561%&	5,560	1/4	C, N, R	H, J, K, C, E	B, D	S	P, R	ANG,DAL
RN^65@5621%&	5,620	1/4	C, N, R	H, J, K, C, E	B, D, F	S	P, R	ANG,DAL
RN^65@5691%&	5,690	1/4	C, N, R	H, J, K, C, E	B, D	S	P, R	ANG,DAL
RN^65@5761%&	5,760	1/4	C, N, R	H, J, K, C, E	B, D, F	S	P, R	ANG,DAL
	Resistance	Power	Term.	Char.	Resistance	Level 1	Level 2	
Part Number	Value (Ohms)	Rating (W)	Type (^)	(@)	Tolerance (%)	(FRL) (&)	(FRL) (&)	Manufacturer
RN^65@5831%&	5,830	1/4	C, N, R	H, J, K, C, E	B, D	S	P, R	ANG,DAL
RN^65@5901%&	5,900	1/4	C, N, R	H, J, K, C, E	B, D, F	S	P, R	ANG,DAL
RN^65@5971%&	5,970	1/4	C, N, R	H, J, K, C, E	B, D	S	P, R	ANG,DAL
RN^65@6041%&	6,040	1/4	C, N, R	H, J, K, C, E	B, D, F	S	P, R	ANG,DAL
RN^65@6121%&	6,120	1/4	C, N, R	H, J, K, C, E	B, D	S	P, R	ANG,DAL
RN^65@6191%&	6,190	1/4	C, N, R	H, J, K, C, E	B, D, F	S	P, R	ANG,DAL
RN^65@6261%&	6,260	1/4	C, N, R	H, J, K, C, E	B, D	S	P, R	ANG,DAL
	Resistance	Power	Term.	Char.	Resistance	Level 1	Level 2	
Part Number	Value (Ohms)	Rating (W)	Type (^)	(@)	Tolerance (%)	(FRL) (&)	(FRL) (&)	Manufacturer
RN^65@6341%&	6,340	1/4	C, N, R	H, J, K, C, E	B, D, F	S	P, R	ANG,DAL
RN^65@6421%&	6,420	1/4	C, N, R	H, J, K, C, E	B, D	S	P, R	ANG,DAL
RN^65@6491%&	6,490	1/4	C, N, R	H, J, K, C, E	B, D, F	S	P, R	ANG,DAL
RN^65@6571%&	6,570	1/4	C, N, R	H, J, K, C, E	B, D	S	P, R	ANG,DAL
RN^65@6651%&	6,650	1/4	C, N, R	H, J, K, C, E	B, D, F	S	P, R	ANG,DAL
RN^65@6731%&	6,730	1/4	C, N, R	H, J, K, C, E	B, D	S	P, R	ANG,DAL
RN^65@6811%&	6,810	1/4	C, N, R	H, J, K, C, E	B, D, F	S	P, R	ANG,DAL
	Resistance	Power	Term.	Char.	Resistance	Level 1	Level 2	
Part Number	Value (Ohms)	Rating (W)	Type (^)	(@)	Tolerance (%)	(FRL) (&)	(FRL) (&)	Manufacturer
RN^65@6901%&	6,900	1/4	C, N, R	H, J, K, C, E	B, D	S	P, R	ANG,DAL
RN^65@6981%&	6,980	1/4	C, N, R	H, J, K, C, E	B, D, F	S	P, R	ANG,DAL
RN^65@7061%&	7,060	1/4	C, N, R	H, J, K, C, E	B, D	S	P, R	ANG,DAL
RN^65@7151%&	7,150	1/4	C, N, R	H, J, K, C, E	B, D, F	S	P, R	ANG,DAL
RN^65@7231%&	7,230	1/4	C, N, R	H, J, K, C, E	B, D	S	P, R	ANG,DAL
RN^65@7321%&	7,320	1/4	C, N, R	H, J, K, C, E	B, D, F	S	P, R	ANG,DAL
RN^65@7411%&	7,410	1/4	C, N, R	H, J, K, C, E	B, D	S	P, R	ANG,DAL
	Resistance	Power	Term.	Char.	Resistance	Level 1	Level 2	
Part Number	Value (Ohms)	Rating (W)	Type (^)	(@)	Tolerance (%)	(FRL) (&)	(FRL) (&)	Manufacturer
RN^65@7501%&	7,500	1/4	C, N, R	H, J, K, C, E	B, D, F	S	P, R	ANG,DAL
RN^65@7591%&	7,590	1/4	C, N, R	H, J, K, C, E	B, D	S	P, R	ANG,DAL
RN^65@7681%&	7,680	1/4	C, N, R	H, J, K, C, E	B, D, F	S	P, R	ANG,DAL
RN^65@7771%&	7,770	1/4	C, N, R	H, J, K, C, E	B, D	S	P, R	ANG,DAL
RN^65@7871%&	7,870	1/4	C, N, R	H, J, K, C, E	B, D, F	S	P, R	ANG,DAL
RN^65@7961%&	7,960	1/4	C, N, R	H, J, K, C, E	B, D	S	P, R	ANG,DAL
RN^65@8061%&	8,060	1/4	C, N, R	H, J, K, C, E	B, D, F	S	P, R	ANG,DAL

	Resistance	Power	Term.	Char.	Resistance	Level 1	Level 2	
Part Number	Value (Ohms)	Rating (W)	Type (^)	(@)	Tolerance (%)	(FRL) (&)	(FRL) (&)	Manufacturer
RN^65@8161%&	8,160	1/4	C, N, R	H, J, K, C, E	B, D	S	P, R	ANG,DAL
RN^65@8251%&	8,250	1/4	C, N, R	H, J, K, C, E	B, D, F	S	P, R	ANG,DAL
RN^65@8351%&	8,350	1/4	C, N, R	H, J, K, C, E	B, D	S	P, R	ANG,DAL
RN^65@8451%&	8,450	1/4	C, N, R	H, J, K, C, E	B, D, F	S	P, R	ANG,DAL
RN^65@8561%&	8,560	1/4	C, N, R	H, J, K, C, E	B, D	S	P, R	ANG,DAL
RN^65@8661%&	8,660	1/4	C, N, R	H, J, K, C, E	B, D, F	S	P, R	ANG,DAL
RN^65@8761%&	8,760	1/4	C, N, R	H, J, K, C, E	B, D	S	P, R	ANG,DAL
	Resistance	Power	Term.	Char.	Resistance	Level 1	Level 2	
Part Number	Value (Ohms)	Rating (W)	Type (^)	(@)	Tolerance (%)	(FRL) (&)	(FRL) (&)	Manufacturer
RN^65@8871%&	8,870	1/4	C, N, R	H, J, K, C, E	B, D, F	S	P, R	ANG,DAL
RN^65@8981%&	8,980	1/4	C, N, R	H, J, K, C, E	B, D	S	P, R	ANG,DAL
RN^65@9091%&	9,090	1/4	C, N, R	H, J, K, C, E	B, D, F	S	P, R	ANG,DAL
RN^65@9201%&	9,200	1/4	C, N, R	H, J, K, C, E	B, D	S	P, R	ANG,DAL
RN^65@9311%&	9,310	1/4	C, N, R	H, J, K, C, E	B, D, F	S	P, R	ANG,DAL
RN^65@9421%&	9,420	1/4	C, N, R	H, J, K, C, E	B, D	S	P, R	ANG,DAL
RN^65@9531%&	9,530	1/4	C, N, R	H, J, K, C, E	B, D, F	S	P, R	ANG,DAL
	Resistance	Power	Term.	Char.	Resistance	Level 1	Level 2	
Part Number	Value (Ohms)	Rating (W)	Type (^)	(@)	Tolerance (%)	(FRL) (&)	(FRL) (&)	Manufacturer
RN^65@9651%&	9,650	1/4	C, N, R	H, J, K, C, E	B, D	S	P, R	ANG,DAL
RN^65@9761%&	9,760	1/4	C, N, R	H, J, K, C, E	B, D, F	S	P, R	ANG,DAL
RN^65@9881%&	9,880	1/4	C, N, R	H, J, K, C, E	B, D	S	P, R	ANG,DAL

RN^65 Film Resistors: 10,000 Ohms through 98,800 Ohms

	Resistance	Power	Term.	Char.	Resistance	Level 1	Level 2	
Part Number	Value (Ohms)	Rating (W)	Type (^)	(@)	Tolerance (%)	(FRL) (&)	(FRL) (&)	Manufacturer
RN^65@1002%&	10,000	1/4	C, N, R	H, J, K, C, E	B, D, F	S	P, R	ANG,DAL
RN^65@1012%&	10,100	1/4	C, N, R	H, J, K, C, E	B, D	S	P, R	ANG,DAL
RN^65@1022%&	10,200	1/4	C, N, R	H, J, K, C, E	B, D, F	S	P, R	ANG,DAL
RN^65@1042%&	10,400	1/4	C, N, R	H, J, K, C, E	B, D	S	P, R	ANG,DAL
RN^65@1052%&	10,500	1/4	C, N, R	H, J, K, C, E	B, D, F	S	P, R	ANG,DAL
RN^65@1062%&	10,600	1/4	C, N, R	H, J, K, C, E	B, D	S	P, R	ANG,DAL
RN^65@1072%&	10,700	1/4	C, N, R	H, J, K, C, E	B, D, F	S	P, R	ANG,DAL
	Resistance	Power	Term.	Char.	Resistance	Level 1	Level 2	
Part Number	Value (Ohms)	Rating (W)	Type (^)	(@)	Tolerance (%)	(FRL) (&)	(FRL) (&)	Manufacturer
RN^65@1092%&	10,900	1/4	C, N, R	H, J, K, C, E	B, D	S	P, R	ANG,DAL
RN^65@1102%&	11,000	1/4	C, N, R	H, J, K, C, E	B, D, F	S	P, R	ANG,DAL
RN^65@1112%&	11,100	1/4	C, N, R	H, J, K, C, E	B, D	S	P, R	ANG,DAL
RN^65@1132%&	11,300	1/4	C, N, R	H, J, K, C, E	B, D, F	S	P, R	ANG,DAL
RN^65@1142%&	11,400	1/4	C, N, R	H, J, K, C, E	B, D	S	P, R	ANG,DAL
RN^65@1152%&	11,500	1/4	C, N, R	H, J, K, C, E	B, D, F	S	P, R	ANG,DAL
RN^65@1172%&	11,700	1/4	C, N, R	H, J, K, C, E	B, D	S	P, R	ANG,DAL
	Resistance	Power	Term.	Char.	Resistance	Level 1	Level 2	

Part Number	Value (Ohms)	Rating (W)	Type (^)	(@)	Tolerance (%)	(FRL) (&)	(FRL) (&)	Manufacturer
RN^65@1182%&	11,800	1/4	C, N, R	H, J, K, C, E	B, D, F	S	P, R	ANG,DAL
RN^65@1202%&	12,000	1/4	C, N, R	H, J, K, C, E	B, D	S	P, R	ANG,DAL
RN^65@1212%&	12,100	1/4	C, N, R	H, J, K, C, E	B, D, F	S	P, R	ANG,DAL
RN^65@1232%&	12,300	1/4	C, N, R	H, J, K, C, E	B, D	S	P, R	ANG,DAL
RN^65@1242%&	12,400	1/4	C, N, R	H, J, K, C, E	B, D, F	S	P, R	ANG,DAL
RN^65@1262%&	12,600	1/4	C, N, R	H, J, K, C, E	B, D	S	P, R	ANG,DAL
RN^65@1272%&	12,700	1/4	C, N, R	H, J, K, C, E	B, D, F	S	P, R	ANG,DAL
	Resistance	Power	Term.	Char.	Resistance	Level 1	Level 2	
Part Number	Value (Ohms)	Rating (W)	Type (^)	(@)	Tolerance (%)	(FRL) (&)	(FRL) (&)	Manufacturer
RN^65@1292%&	12,900	1/4	C, N, R	H, J, K, C, E	B, D	S	P, R	ANG,DAL
RN^65@1302%&	13,000	1/4	C, N, R	H, J, K, C, E	B, D, F	S	P, R	ANG,DAL
RN^65@1322%&	13,200	1/4	C, N, R	H, J, K, C, E	B, D	S	P, R	ANG,DAL
RN^65@1332%&	13,300	1/4	C, N, R	H, J, K, C, E	B, D, F	S	P, R	ANG,DAL
RN^65@1352%&	13,500	1/4	C, N, R	H, J, K, C, E	B, D	S	P, R	ANG,DAL
RN^65@1372%&	13,700	1/4	C, N, R	H, J, K, C, E	B, D, F	S	P, R	ANG,DAL
RN^65@1382%&	13,800	1/4	C, N, R	H, J, K, C, E	B, D	S	P, R	ANG,DAL
	Resistance	Power	Term.	Char.	Resistance	Level 1	Level 2	
Part Number	Value (Ohms)	Rating (W)	Type (^)	(@)	Tolerance (%)	(FRL) (&)	(FRL) (&)	Manufacturer
RN^65@1402%&	14,000	1/4	C, N, R	H, J, K, C, E	B, D, F	S	P, R	ANG,DAL
RN^65@1422%&	14,200	1/4	C, N, R	H, J, K, C, E	B, D	S	P, R	ANG,DAL
RN^65@1432%&	14,300	1/4	C, N, R	H, J, K, C, E	B, D, F	S	P, R	ANG,DAL
RN^65@1452%&	14,500	1/4	C, N, R	H, J, K, C, E	B, D	S	P, R	ANG,DAL
RN^65@1472%&	14,700	1/4	C, N, R	H, J, K, C, E	B, D, F	S	P, R	ANG,DAL
RN^65@1492%&	14,900	1/4	C, N, R	H, J, K, C, E	B, D	S	P, R	ANG,DAL
RN^65@1502%&	15,000	1/4	C, N, R	H, J, K, C, E	B, D, F	S	P, R	ANG,DAL
	Resistance	Power	Term.	Char.	Resistance	Level 1	Level 2	
Part Number	Value (Ohms)	Rating (W)	Type (^)	(@)	Tolerance (%)	(FRL) (&)	(FRL) (&)	Manufacturer
RN^65@1522%&	15,200	1/4	C, N, R	H, J, K, C, E	B, D	S	P, R	ANG,DAL
RN^65@1542%&	15,400	1/4	C, N, R	H, J, K, C, E	B, D, F	S	P, R	ANG,DAL
RN^65@1562%&	15,600	1/4	C, N, R	H, J, K, C, E	B, D	S	P, R	ANG,DAL
RN^65@1582%&	15,800	1/4	C, N, R	H, J, K, C, E	B, D, F	S	P, R	ANG,DAL
RN^65@1602%&	16,000	1/4	C, N, R	H, J, K, C, E	B, D	S	P, R	ANG,DAL
RN^65@1622%&	16,200	1/4	C, N, R	H, J, K, C, E	B, D, F	S	P, R	ANG,DAL
RN^65@1642%&	16,400	1/4	C, N, R	H, J, K, C, E	B, D	S	P, R	ANG,DAL
	Resistance	Power	Term.	Char.	Resistance	Level 1	Level 2	
Part Number	Value (Ohms)	Rating (W)	Type (^)	(@)	Tolerance (%)	(FRL) (&)	(FRL) (&)	Manufacturer
RN^65@1652%&	16,500	1/4	C, N, R	H, J, K, C, E	B, D, F	S	P, R	ANG,DAL
RN^65@1672%&	16,700	1/4	C, N, R	H, J, K, C, E	B, D	S	P, R	ANG,DAL
RN^65@1692%&	16,900	1/4	C, N, R	H, J, K, C, E	B, D, F	S	P, R	ANG,DAL
RN^65@1722%&	17,200	1/4	C, N, R	H, J, K, C, E	B, D	S	P, R	ANG,DAL
RN^65@1742%&	17,400	1/4	C, N, R	H, J, K, C, E	B, D, F	S	P, R	ANG,DAL
RN^65@1762%&	17,600	1/4	C, N, R	H, J, K, C, E	B, D	S	P, R	ANG,DAL
RN^65@1782%&	17,800	1/4	C, N, R	H, J, K, C, E	B, D, F	S	P, R	ANG,DAL
	Resistance	Power	Term.	Char.	Resistance	Level 1	Level 2	
Part Number	Value (Ohms)	Rating (W)	Type (^)	(@)	Tolerance (%)	(FRL) (&)	(FRL) (&)	Manufacturer
RN^65@1802%&	18,000	1/4	C, N, R	H, J, K, C, E	B, D	S	P, R	ANG,DAL

RN^65@1822%&	18,200	1/4	C, N, R	H, J, K, C, E	B, D, F	S	P, R	ANG,DAL
RN^65@1842%&	18,400	1/4	C, N, R	H, J, K, C, E	B, D	S	P, R	ANG,DAL
RN^65@1872%&	18,700	1/4	C, N, R	H, J, K, C, E	B, D, F	S	P, R	ANG,DAL
RN^65@1892%&	18,900	1/4	C, N, R	H, J, K, C, E	B, D	S	P, R	ANG,DAL
RN^65@1912%&	19,100	1/4	C, N, R	H, J, K, C, E	B, D, F	S	P, R	ANG,DAL
RN^65@1932%&	19,300	1/4	C, N, R	H, J, K, C, E	B, D	S	P, R	ANG,DAL
	Resistance	Power	Term.	Char.	Resistance	Level 1	Level 2	
Part Number	Value (Ohms)	Rating (W)	Type (^)	(@)	Tolerance (%)	(FRL) (&)	(FRL) (&)	Manufacturer
RN^65@1962%&	19,600	1/4	C, N, R	H, J, K, C, E	B, D, F	S	P, R	ANG,DAL
RN^65@1982%&	19,800	1/4	C, N, R	H, J, K, C, E	B, D	S	P, R	ANG,DAL
RN^65@2002%&	20,000	1/4	C, N, R	H, J, K, C, E	B, D, F	S	P, R	ANG,DAL
RN^65@2032%&	20,300	1/4	C, N, R	H, J, K, C, E	B, D	S	P, R	ANG,DAL
RN^65@2052%&	20,500	1/4	C, N, R	H, J, K, C, E	B, D, F	S	P, R	ANG,DAL
RN^65@2082%&	20,800	1/4	C, N, R	H, J, K, C, E	B, D	S	P, R	ANG,DAL
RN^65@2102%&	21,000	1/4	C, N, R	H, J, K, C, E	B, D, F	S	P, R	ANG,DAL
	Resistance	Power	Term.	Char.	Resistance	Level 1	Level 2	
Part Number	Value (Ohms)	Rating (W)	Type (^)	(@)	Tolerance (%)	(FRL) (&)	(FRL) (&)	Manufacturer
RN^65@2132%&	21,300	1/4	C, N, R	H, J, K, C, E	B, D	S	P, R	ANG,DAL
RN^65@2152%&	21,500	1/4	C, N, R	H, J, K, C, E	B, D, F	S	P, R	ANG,DAL
RN^65@2182%&	21,800	1/4	C, N, R	H, J, K, C, E	B, D	S	P, R	ANG,DAL
RN^65@2212%&	22,100	1/4	C, N, R	H, J, K, C, E	B, D, F	S	P, R	ANG,DAL
RN^65@2232%&	22,300	1/4	C, N, R	H, J, K, C, E	B, D	S	P, R	ANG,DAL
RN^65@2262%&	22,600	1/4	C, N, R	H, J, K, C, E	B, D, F	S	P, R	ANG,DAL
RN^65@2292%&	22,900	1/4	C, N, R	H, J, K, C, E	B, D	S	P, R	ANG,DAL
	Resistance	Power	Term.	Char.	Resistance	Level 1	Level 2	
Part Number	Value (Ohms)	Rating (W)	Type (^)	(@)	Tolerance (%)	(FRL) (&)	(FRL) (&)	Manufacturer
RN^65@2322%&	23,200	1/4	C, N, R	H, J, K, C, E	B, D, F	S	P, R	ANG,DAL
RN^65@2342%&	23,400	1/4	C, N, R	H, J, K, C, E	B, D	S	P, R	ANG,DAL
RN^65@2372%&	23,700	1/4	C, N, R	H, J, K, C, E	B, D, F	S	P, R	ANG,DAL
RN^65@2402%&	24,000	1/4	C, N, R	H, J, K, C, E	B, D	S	P, R	ANG,DAL
RN^65@2432%&	24,300	1/4	C, N, R	H, J, K, C, E	B, D, F	S	P, R	ANG,DAL
RN^65@2462%&	24,600	1/4	C, N, R	H, J, K, C, E	B, D	S	P, R	ANG,DAL
RN^65@2492%&	24,900	1/4	C, N, R	H, J, K, C, E	B, D, F	S	P, R	ANG,DAL
	Resistance	Power	Term.	Char.	Resistance	Level 1	Level 2	
Part Number	Value (Ohms)	Rating (W)	Type (^)	(@)	Tolerance (%)	(FRL) (&)	(FRL) (&)	Manufacturer
RN^65@2522%&	25,200	1/4	C, N, R	H, J, K, C, E	B, D	S	P, R	ANG,DAL
RN^65@2552%&	25,500	1/4	C, N, R	H, J, K, C, E	B, D, F	S	P, R	ANG,DAL
RN^65@2582%&	25,800	1/4	C, N, R	H, J, K, C, E	B, D	S	P, R	ANG,DAL
RN^65@2612%&	26,100	1/4	C, N, R	H, J, K, C, E	B, D, F	S	P, R	ANG,DAL
RN^65@2642%&	26,400	1/4	C, N, R	H, J, K, C, E	B, D	S	P, R	ANG,DAL
RN^65@2672%&	26,700	1/4	C, N, R	H, J, K, C, E	B, D, F	S	P, R	ANG,DAL
RN^65@2712%&	27,100	1/4	C, N, R	H, J, K, C, E	B, D	S	P, R	ANG,DAL
	Resistance	Power	Term.	Char.	Resistance	Level 1	Level 2	
Part Number	Value (Ohms)	Rating (W)	Type (^)	(@)	Tolerance (%)	(FRL) (&)	(FRL) (&)	Manufacturer
RN^65@2742%&	27,400	1/4	C, N, R	H, J, K, C, E	B, D, F	S	P, R	ANG,DAL
RN^65@2772%&	27,700	1/4	C, N, R	H, J, K, C, E	B, D	S	P, R	ANG,DAL
RN^65@2802%&	28,000	1/4	C, N, R	H, J, K, C, E	B, D, F	S	P, R	ANG,DAL

RN^65@2842%&	28,400	1/4	C, N, R	H, J, K, C, E	B, D	S	P, R	ANG,DAL
RN^65@2872%&	28,700	1/4	C, N, R	H, J, K, C, E	B, D, F	S	P, R	ANG,DAL
RN^65@2912%&	29,100	1/4	C, N, R	H, J, K, C, E	B, D	S	P, R	ANG,DAL
RN^65@2942%&	29,400	1/4	C, N, R	H, J, K, C, E	B, D, F	S	P, R	ANG,DAL
	Resistance	Power	Term.	Char.	Resistance	Level 1	Level 2	
Part Number	Value (Ohms)	Rating (W)	Type (^)	(@)	Tolerance (%)	(FRL) (&)	(FRL) (&)	Manufacturer
RN^65@2982%&	29,800	1/4	C, N, R	H, J, K, C, E	B, D	S	P, R	ANG,DAL
RN^65@3012%&	30,100	1/4	C, N, R	H, J, K, C, E	B, D, F	S	P, R	ANG,DAL
RN^65@3052%&	30,500	1/4	C, N, R	H, J, K, C, E	B, D	S	P, R	ANG,DAL
RN^65@3092%&	30,900	1/4	C, N, R	H, J, K, C, E	B, D, F	S	P, R	ANG,DAL
RN^65@3122%&	31,200	1/4	C, N, R	H, J, K, C, E	B, D	S	P, R	ANG,DAL
RN^65@3162%&	31,600	1/4	C, N, R	H, J, K, C, E	B, D, F	S	P, R	ANG,DAL
RN^65@3202%&	32,000	1/4	C, N, R	H, J, K, C, E	B, D	S	P, R	ANG,DAL
	Resistance	Power	Term.	Char.	Resistance	Level 1	Level 2	
Part Number	Value (Ohms)	Rating (W)	Type (^)	(@)	Tolerance (%)	(FRL) (&)	(FRL) (&)	Manufacturer
RN^65@3242%&	32,400	1/4	C, N, R	H, J, K, C, E	B, D, F	S	P, R	ANG,DAL
RN^65@3282%&	32,800	1/4	C, N, R	H, J, K, C, E	B, D	S	P, R	ANG,DAL
RN^65@3322%&	33,200	1/4	C, N, R	H, J, K, C, E	B, D, F	S	P, R	ANG,DAL
RN^65@3362%&	33,600	1/4	C, N, R	H, J, K, C, E	B, D	S	P, R	ANG,DAL
RN^65@3402%&	34,000	1/4	C, N, R	H, J, K, C, E	B, D, F	S	P, R	ANG,DAL
RN^65@3442%&	34,400	1/4	C, N, R	H, J, K, C, E	B, D	S	P, R	ANG,DAL
RN^65@3482%&	34,800	1/4	C, N, R	H, J, K, C, E	B, D, F	S	P, R	ANG,DAL
	Resistance	Power	Term.	Char.	Resistance	Level 1	Level 2	
Part Number	Value (Ohms)	Rating (W)	Type (^)	(@)	Tolerance (%)	(FRL) (&)	(FRL) (&)	Manufacturer
RN^65@3522%&	35,200	1/4	C, N, R	H, J, K, C, E	B, D	S	P, R	ANG,DAL
RN^65@3572%&	35,700	1/4	C, N, R	H, J, K, C, E	B, D, F	S	P, R	ANG,DAL
RN^65@3612%&	36,100	1/4	C, N, R	H, J, K, C, E	B, D	S	P, R	ANG,DAL
RN^65@3652%&	36,500	1/4	C, N, R	H, J, K, C, E	B, D, F	S	P, R	ANG,DAL
RN^65@3702%&	37,000	1/4	C, N, R	H, J, K, C, E	B, D	S	P, R	ANG,DAL
RN^65@3742%&	37,400	1/4	C, N, R	H, J, K, C, E	B, D, F	S	P, R	ANG,DAL
RN^65@3792%&	37,900	1/4	C, N, R	H, J, K, C, E	B, D	S	P, R	ANG,DAL
	Resistance	Power	Term.	Char.	Resistance	Level 1	Level 2	
Part Number	Value (Ohms)	Rating (W)	Type (^)	(@)	Tolerance (%)	(FRL) (&)	(FRL) (&)	Manufacturer
RN^65@3832%&	38,300	1/4	C, N, R	H, J, K, C, E	B, D, F	S	P, R	ANG,DAL
RN^65@3882%&	38,800	1/4	C, N, R	H, J, K, C, E	B, D	S	P, R	ANG,DAL
RN^65@3922%&	39,200	1/4	C, N, R	H, J, K, C, E	B, D, F	S	P, R	ANG,DAL
RN^65@3972%&	39,700	1/4	C, N, R	H, J, K, C, E	B, D	S	P, R	ANG,DAL
RN^65@4022%&	40,200	1/4	C, N, R	H, J, K, C, E	B, D, F	S	P, R	ANG,DAL
RN^65@4072%&	40,700	1/4	C, N, R	H, J, K, C, E	B, D	S	P, R	ANG,DAL
RN^65@4122%&	41,200	1/4	C, N, R	H, J, K, C, E	B, D, F	S	P, R	ANG,DAL
	Resistance	Power	Term.	Char.	Resistance	Level 1	Level 2	
Part Number	Value (Ohms)	Rating (W)	Type (^)	(@)	Tolerance (%)	(FRL) (&)	(FRL) (&)	Manufacturer
RN^65@4172%&	41,700	1/4	C, N, R	H, J, K, C, E	B, D	S	P, R	ANG,DAL
RN^65@4222%&	42,200	1/4	C, N, R	H, J, K, C, E	B, D, F	S	P, R	ANG,DAL
RN^65@4272%&	42,700	1/4	C, N, R	H, J, K, C, E	B, D	S	P, R	ANG,DAL
RN^65@4322%&	43,200	1/4	C, N, R	H, J, K, C, E	B, D, F	S	P, R	ANG,DAL
RN^65@4372%&	43,700	1/4	C, N, R	H, J, K, C, E	B, D	S	P, R	ANG,DAL

RN^65@4422%&	44,200	1/4	C, N, R	H, J, K, C, E	B, D, F	S	P, R	ANG,DAL
RN^65@4482%&	44,800	1/4	C, N, R	H, J, K, C, E	B, D	S	P, R	ANG,DAL
	Resistance	Power	Term.	Char.	Resistance	Level 1	Level 2	
Part Number	Value (Ohms)	Rating (W)	Type (^)	(@)	Tolerance (%)	(FRL) (&)	(FRL) (&)	Manufacturer
RN^65@4532%&	45,300	1/4	C, N, R	H, J, K, C, E	B, D, F	S	P, R	ANG,DAL
RN^65@4592%&	45,900	1/4	C, N, R	H, J, K, C, E	B, D	S	P, R	ANG,DAL
RN^65@4642%&	46,400	1/4	C, N, R	H, J, K, C, E	B, D, F	S	P, R	ANG,DAL
RN^65@4702%&	47,000	1/4	C, N, R	H, J, K, C, E	B, D	S	P, R	ANG,DAL
RN^65@4752%&	47,500	1/4	C, N, R	H, J, K, C, E	B, D, F	S	P, R	ANG,DAL
RN^65@4812%&	48,100	1/4	C, N, R	H, J, K, C, E	B, D	S	P, R	ANG,DAL
RN^65@4872%&	48,700	1/4	C, N, R	H, J, K, C, E	B, D, F	S	P, R	ANG,DAL
	Resistance	Power	Term.	Char.	Resistance	Level 1	Level 2	
Part Number	Value (Ohms)	Rating (W)	Type (^)	(@)	Tolerance (%)	(FRL) (&)	(FRL) (&)	Manufacturer
RN^65@4932%&	49,300	1/4	C, N, R	H, J, K, C, E	B, D	S	P, R	ANG,DAL
RN^65@4992%&	49,900	1/4	C, N, R	H, J, K, C, E	B, D, F	S	P, R	ANG,DAL
RN^65@5052%&	50,500	1/4	C, N, R	H, J, K, C, E	B, D	S	P, R	ANG,DAL
RN^65@5112%&	51,100	1/4	C, N, R	H, J, K, C, E	B, D, F	S	P, R	ANG,DAL
RN^65@5172%&	51,700	1/4	C, N, R	H, J, K, C, E	B, D	S	P, R	ANG,DAL
RN^65@5232%&	52,300	1/4	C, N, R	H, J, K, C, E	B, D, F	S	P, R	ANG,DAL
RN^65@5302%&	53,000	1/4	C, N, R	H, J, K, C, E	B, D	S	P, R	ANG,DAL
	Resistance	Power	Term.	Char.	Resistance	Level 1	Level 2	
Part Number	Value (Ohms)	Rating (W)	Type (^)	(@)	Tolerance (%)	(FRL) (&)	(FRL) (&)	Manufacturer
RN^65@5362%&	53,600	1/4	C, N, R	H, J, K, C, E	B, D, F	S	P, R	ANG,DAL
RN^65@5422%&	54,200	1/4	C, N, R	H, J, K, C, E	B, D	S	P, R	ANG,DAL
RN^65@5492%&	54,900	1/4	C, N, R	H, J, K, C, E	B, D, F	S	P, R	ANG,DAL
RN^65@5562%&	55,600	1/4	C, N, R	H, J, K, C, E	B, D	S	P, R	ANG,DAL
RN^65@5622%&	56,200	1/4	C, N, R	H, J, K, C, E	B, D, F	S	P, R	ANG,DAL
RN^65@5692%&	56,900	1/4	C, N, R	H, J, K, C, E	B, D	S	P, R	ANG,DAL
RN^65@5762%&	57,600	1/4	C, N, R	H, J, K, C, E	B, D, F	S	P, R	ANG,DAL
	Resistance	Power	Term.	Char.	Resistance	Level 1	Level 2	
Part Number	Value (Ohms)	Rating (W)	Type (^)	(@)	Tolerance (%)	(FRL) (&)	(FRL) (&)	Manufacturer
RN^65@5832%&	58,300	1/4	C, N, R	H, J, K, C, E	B, D	S	P, R	ANG,DAL
RN^65@5902%&	59,000	1/4	C, N, R	H, J, K, C, E	B, D, F	S	P, R	ANG,DAL
RN^65@5972%&	59,700	1/4	C, N, R	H, J, K, C, E	B, D	S	P, R	ANG,DAL
RN^65@6042%&	60,400	1/4	C, N, R	H, J, K, C, E	B, D, F	S	P, R	ANG,DAL
RN^65@6122%&	61,200	1/4	C, N, R	H, J, K, C, E	B, D	S	P, R	ANG,DAL
RN^65@6192%&	61,900	1/4	C, N, R	H, J, K, C, E	B, D, F	S	P, R	ANG,DAL
RN^65@6262%&	62,600	1/4	C, N, R	H, J, K, C, E	B, D	S	P, R	ANG,DAL
	Resistance	Power	Term.	Char.	Resistance	Level 1	Level 2	
Part Number	Value (Ohms)	Rating (W)	Type (^)	(@)	Tolerance (%)	(FRL) (&)	(FRL) (&)	Manufacturer
RN^65@6342%&	63,400	1/4	C, N, R	H, J, K, C, E	B, D, F	S	P, R	ANG,DAL
RN^65@6422%&	64,200	1/4	C, N, R	H, J, K, C, E	B, D	S	P, R	ANG,DAL
RN^65@6492%&	64,900	1/4	C, N, R	H, J, K, C, E	B, D, F	S	P, R	ANG,DAL
RN^65@6572%&	65,700	1/4	C, N, R	H, J, K, C, E	B, D	S	P, R	ANG,DAL
RN^65@6652%&	66,500	1/4	C, N, R	H, J, K, C, E	B, D, F	S	P, R	ANG,DAL
RN^65@6732%&	67,300	1/4	C, N, R	H, J, K, C, E	B, D	S	P, R	ANG,DAL
RN^65@6812%&	68,100	1/4	C, N, R	H, J, K, C, E	B, D, F	S	P, R	ANG,DAL

	Resistance	Power	Term.	Char.	Resistance	Level 1	Level 2	
Part Number	Value (Ohms)	Rating (W)	Type (^)	(@)	Tolerance (%)	(FRL) (&)	(FRL) (&)	Manufacturer
RN^65@6902%&	69,000	1/4	C, N, R	H, J, K, C, E	B, D	S	P, R	ANG,DAL
RN^65@6982%&	69,800	1/4	C, N, R	H, J, K, C, E	B, D, F	S	P, R	ANG,DAL
RN^65@7062%&	70,600	1/4	C, N, R	H, J, K, C, E	B, D	S	P, R	ANG,DAL
RN^65@7152%&	71,500	1/4	C, N, R	H, J, K, C, E	B, D, F	S	P, R	ANG,DAL
RN^65@7232%&	72,300	1/4	C, N, R	H, J, K, C, E	B, D	S	P, R	ANG,DAL
RN^65@7322%&	73,200	1/4	C, N, R	H, J, K, C, E	B, D, F	S	P, R	ANG,DAL
RN^65@7412%&	74,100	1/4	C, N, R	H, J, K, C, E	B, D	S	P, R	ANG,DAL
	Resistance	Power	Term.	Char.	Resistance	Level 1	Level 2	
Part Number	Value (Ohms)	Rating (W)	Type (^)	(@)	Tolerance (%)	(FRL) (&)	(FRL) (&)	Manufacturer
RN^65@7502%&	75,000	1/4	C, N, R	H, J, K, C, E	B, D, F	S	P, R	ANG,DAL
RN^65@7592%&	75,900	1/4	C, N, R	H, J, K, C, E	B, D	S	P, R	ANG,DAL
RN^65@7682%&	76,800	1/4	C, N, R	H, J, K, C, E	B, D, F	S	P, R	ANG,DAL
RN^65@7772%&	77,700	1/4	C, N, R	H, J, K, C, E	B, D	S	P, R	ANG,DAL
RN^65@7872%&	78,700	1/4	C, N, R	H, J, K, C, E	B, D, F	S	P, R	ANG,DAL
RN^65@7962%&	79,600	1/4	C, N, R	H, J, K, C, E	B, D	S	P, R	ANG,DAL
RN^65@8062%&	80,600	1/4	C, N, R	H, J, K, C, E	B, D, F	S	P, R	ANG,DAL
	Resistance	Power	Term.	Char.	Resistance	Level 1	Level 2	
Part Number	Value (Ohms)	Rating (W)	Type (^)	(@)	Tolerance (%)	(FRL) (&)	(FRL) (&)	Manufacturer
RN^65@8162%&	81,600	1/4	C, N, R	H, J, K, C, E	B, D	S	P, R	ANG,DAL
RN^65@8252%&	82,500	1/4	C, N, R	H, J, K, C, E	B, D, F	S	P, R	ANG,DAL
RN^65@8352%&	83,500	1/4	C, N, R	H, J, K, C, E	B, D	S	P, R	ANG,DAL
RN^65@8452%&	84,500	1/4	C, N, R	H, J, K, C, E	B, D, F	S	P, R	ANG,DAL
RN^65@8562%&	85,600	1/4	C, N, R	H, J, K, C, E	B, D	S	P, R	ANG,DAL
RN^65@8662%&	86,600	1/4	C, N, R	H, J, K, C, E	B, D, F	S	P, R	ANG,DAL
RN^65@8762%&	87,600	1/4	C, N, R	H, J, K, C, E	B, D	S	P, R	ANG,DAL
	Resistance	Power	Term.	Char.	Resistance	Level 1	Level 2	
Part Number	Value (Ohms)	Rating (W)	Type (^)	(@)	Tolerance (%)	(FRL) (&)	(FRL) (&)	Manufacturer
RN^65@8872%&	88,700	1/4	C, N, R	H, J, K, C, E	B, D, F	S	P, R	ANG,DAL
RN^65@8982%&	89,800	1/4	C, N, R	H, J, K, C, E	B, D	S	P, R	ANG,DAL
RN^65@9092%&	90,900	1/4	C, N, R	H, J, K, C, E	B, D, F	S	P, R	ANG,DAL
RN^65@9202%&	92,000	1/4	C, N, R	H, J, K, C, E	B, D	S	P, R	ANG,DAL
RN^65@9312%&	93,100	1/4	C, N, R	H, J, K, C, E	B, D, F	S	P, R	ANG,DAL
RN^65@9422%&	94,200	1/4	C, N, R	H, J, K, C, E	B, D	S	P, R	ANG,DAL
RN^65@9532%&	95,300	1/4	C, N, R	H, J, K, C, E	B, D, F	S	P, R	ANG,DAL
	Resistance	Power	Term.	Char.	Resistance	Level 1	Level 2	
Part Number	Value (Ohms)	Rating (W)	Type (^)	(@)	Tolerance (%)	(FRL) (&)	(FRL) (&)	Manufacturer
RN^65@9652%&	96,500	1/4	C, N, R	H, J, K, C, E	B, D	S	P, R	ANG,DAL
RN^65@9762%&	97,600	1/4	C, N, R	H, J, K, C, E	B, D, F	S	P, R	ANG,DAL
RN^65@9882%&	98,800	1/4	C, N, R	H, J, K, C, E	B, D	S	P, R	ANG,DAL

RN^65 Film Resistors: 100,000 Ohms through 988,000 Ohms

	Resistance	Power	Term.	Char.	Resistance	Level 1	Level 2	

Part Number	Value (Ohms)	Rating (W)	Type (^)	(@)	Tolerance (%)	(FRL) (&)	(FRL) (&)	Manufacturer
RN^65@1003%&	100,000	1/4	C, N, R	H, J, K, C, E	B, D, F	S	P, R	ANG,DAL
RN^65@1013%&	101,000	1/4	C, N, R	H, J, K, C, E	B, D	S	P, R	ANG,DAL
RN^65@1023%&	102,000	1/4	C, N, R	H, J, K, C, E	B, D, F	S	P, R	ANG,DAL
RN^65@1043%&	104,000	1/4	C, N, R	H, J, K, C, E	B, D	S	P, R	ANG,DAL
RN^65@1053%&	105,000	1/4	C, N, R	H, J, K, C, E	B, D, F	S	P, R	ANG,DAL
RN^65@1063%&	106,000	1/4	C, N, R	H, J, K, C, E	B, D	S	P, R	ANG,DAL
RN^65@1073%&	107,000	1/4	C, N, R	H, J, K, C, E	B, D, F	S	P, R	ANG,DAL
RN^65@1093%&	109,000	1/4	C, N, R	H, J, K, C, E	B, D	S	P, R	ANG,DAL
RN^65@1103%&	110,000	1/4	C, N, R	H, J, K, C, E	B, D, F	S	P, R	ANG,DAL
	Resistance	Power	Term.	Char.	Resistance	Level 1	Level 2	
Part Number	Value (Ohms)	Rating (W)	Type (^)	(@)	Tolerance (%)	(FRL) (&)	(FRL) (&)	Manufacturer
RN^65@1113%&	111,000	1/4	C, N, R	H, J, K, C, E	B, D	S	P, R	ANG,DAL
RN^65@1133%&	113,000	1/4	C, N, R	H, J, K, C, E	B, D, F	S	P, R	ANG,DAL
RN^65@1143%&	114,000	1/4	C, N, R	H, J, K, C, E	B, D	S	P, R	ANG,DAL
RN^65@1153%&	115,000	1/4	C, N, R	H, J, K, C, E	B, D, F	S	P, R	ANG,DAL
RN^65@1173%&	117,000	1/4	C, N, R	H, J, K, C, E	B, D	S	P, R	ANG,DAL
RN^65@1183%&	118,000	1/4	C, N, R	H, J, K, C, E	B, D, F	S	P, R	ANG,DAL
RN^65@1203%&	120,000	1/4	C, N, R	H, J, K, C, E	B, D	S	P, R	ANG,DAL
RN^65@1213%&	121,000	1/4	C, N, R	H, J, K, C, E	B, D, F	S	P, R	ANG,DAL
RN^65@1233%&	123,000	1/4	C, N, R	H, J, K, C, E	B, D	S	P, R	ANG,DAL
	Resistance	Power	Term.	Char.	Resistance	Level 1	Level 2	
Part Number	Value (Ohms)	Rating (W)	Type (^)	(@)	Tolerance (%)	(FRL) (&)	(FRL) (&)	Manufacturer
RN^65@1243%&	124,000	1/4	C, N, R	H, J, K, C, E	B, D, F	S	P, R	ANG,DAL
RN^65@1263%&	126,000	1/4	C, N, R	H, J, K, C, E	B, D	S	P, R	ANG,DAL
RN^65@1273%&	127,000	1/4	C, N, R	H, J, K, C, E	B, D, F	S	P, R	ANG,DAL
RN^65@1293%&	129,000	1/4	C, N, R	H, J, K, C, E	B, D	S	P, R	ANG,DAL
RN^65@1303%&	130,000	1/4	C, N, R	H, J, K, C, E	B, D, F	S	P, R	ANG,DAL
RN^65@1323%&	132,000	1/4	C, N, R	H, J, K, C, E	B, D	S	P, R	ANG,DAL
RN^65@1333%&	133,000	1/4	C, N, R	H, J, K, C, E	B, D, F	S	P, R	ANG,DAL
RN^65@1353%&	135,000	1/4	C, N, R	H, J, K, C, E	B, D	S	P, R	ANG,DAL
RN^65@1373%&	137,000	1/4	C, N, R	H, J, K, C, E	B, D, F	S	P, R	ANG,DAL
	Resistance	Power	Term.	Char.	Resistance	Level 1	Level 2	
Part Number	Value (Ohms)	Rating (W)	Type (^)	(@)	Tolerance (%)	(FRL) (&)	(FRL) (&)	Manufacturer
RN^65@1383%&	138,000	1/4	C, N, R	H, J, K, C, E	B, D	S	P, R	ANG,DAL
RN^65@1403%&	140,000	1/4	C, N, R	H, J, K, C, E	B, D, F	S	P, R	ANG,DAL
RN^65@1423%&	142,000	1/4	C, N, R	H, J, K, C, E	B, D	S	P, R	ANG,DAL
RN^65@1433%&	143,000	1/4	C, N, R	H, J, K, C, E	B, D, F	S	P, R	ANG,DAL
RN^65@1453%&	145,000	1/4	C, N, R	H, J, K, C, E	B, D	S	P, R	ANG,DAL
RN^65@1473%&	147,000	1/4	C, N, R	H, J, K, C, E	B, D, F	S	P, R	ANG,DAL
RN^65@1493%&	149,000	1/4	C, N, R	H, J, K, C, E	B, D	S	P, R	ANG,DAL
RN^65@1503%&	150,000	1/4	C, N, R	H, J, K, C, E	B, D, F	S	P, R	ANG,DAL
RN^65@1523%&	152,000	1/4	C, N, R	H, J, K, C, E	B, D	S	P, R	ANG,DAL
	Resistance	Power	Term.	Char.	Resistance	Level 1	Level 2	
Part Number	Value (Ohms)	Rating (W)	Type (^)	(@)	Tolerance (%)	(FRL) (&)	(FRL) (&)	Manufacturer
RN^65@1543%&	154,000	1/4	C, N, R	H, J, K, C, E	B, D, F	S	P, R	ANG,DAL
RN^65@1563%&	156,000	1/4	C, N, R	H, J, K, C, E	B, D	S	P, R	ANG,DAL

RN^65@1583%&	158,000	1/4	C, N, R	H, J, K, C, E	B, D, F	S	P, R	ANG,DAL
RN^65@1603%&	160,000	1/4	C, N, R	H, J, K, C, E	B, D	S	P, R	ANG,DAL
RN^65@1623%&	162,000	1/4	C, N, R	H, J, K, C, E	B, D, F	S	P, R	ANG,DAL
RN^65@1643%&	164,000	1/4	C, N, R	H, J, K, C, E	B, D	S	P, R	ANG,DAL
RN^65@1653%&	165,000	1/4	C, N, R	H, J, K, C, E	B, D, F	S	P, R	ANG,DAL
RN^65@1673%&	167,000	1/4	C, N, R	H, J, K, C, E	B, D	S	P, R	ANG,DAL
RN^65@1693%&	169,000	1/4	C, N, R	H, J, K, C, E	B, D, F	S	P, R	ANG,DAL
	Resistance	Power	Term.	Char.	Resistance	Level 1	Level 2	
Part Number	Value (Ohms)	Rating (W)	Type (^)	(@)	Tolerance (%)	(FRL) (&)	(FRL) (&)	Manufacturer
RN^65@1723%&	172,000	1/4	C, N, R	H, J, K, C, E	B, D	S	P, R	ANG,DAL
RN^65@1743%&	174,000	1/4	C, N, R	H, J, K, C, E	B, D, F	S	P, R	ANG,DAL
RN^65@1763%&	176,000	1/4	C, N, R	H, J, K, C, E	B, D	S	P, R	ANG,DAL
RN^65@1783%&	178,000	1/4	C, N, R	H, J, K, C, E	B, D, F	S	P, R	ANG,DAL
RN^65@1803%&	180,000	1/4	C, N, R	H, J, K, C, E	B, D	S	P, R	ANG,DAL
RN^65@1823%&	182,000	1/4	C, N, R	H, J, K, C, E	B, D, F	S	P, R	ANG,DAL
RN^65@1843%&	184,000	1/4	C, N, R	H, J, K, C, E	B, D	S	P, R	ANG,DAL
RN^65@1873%&	187,000	1/4	C, N, R	H, J, K, C, E	B, D, F	S	P, R	ANG,DAL
RN^65@1893%&	189,000	1/4	C, N, R	H, J, K, C, E	B, D	S	P, R	ANG,DAL
	Resistance	Power	Term.	Char.	Resistance	Level 1	Level 2	
Part Number	Value (Ohms)	Rating (W)	Type (^)	(@)	Tolerance (%)	(FRL) (&)	(FRL) (&)	Manufacturer
RN^65@1913%&	191,000	1/4	C, N, R	H, J, K, C, E	B, D, F	S	P, R	ANG,DAL
RN^65@1933%&	193,000	1/4	C, N, R	H, J, K, C, E	B, D	S	P, R	ANG,DAL
RN^65@1963%&	196,000	1/4	C, N, R	H, J, K, C, E	B, D, F	S	P, R	ANG,DAL
RN^65@1983%&	198,000	1/4	C, N, R	H, J, K, C, E	B, D	S	P, R	ANG,DAL
RN^65@2003%&	200,000	1/4	C, N, R	H, J, K, C, E	B, D, F	S	P, R	ANG,DAL
RN^65@2033%&	203,000	1/4	C, N, R	H, J, K, C, E	B, D	S	P, R	ANG,DAL
RN^65@2053%&	205,000	1/4	C, N, R	H, J, K, C, E	B, D, F	S	P, R	ANG,DAL
RN^65@2083%&	208,000	1/4	C, N, R	H, J, K, C, E	B, D	S	P, R	ANG,DAL
RN^65@2103%&	210,000	1/4	C, N, R	H, J, K, C, E	B, D, F	S	P, R	ANG,DAL
	Resistance	Power	Term.	Char.	Resistance	Level 1	Level 2	
Part Number	Value (Ohms)	Rating (W)	Type (^)	(@)	Tolerance (%)	(FRL) (&)	(FRL) (&)	Manufacturer
	Resistance	Power	Term.	Char.	Resistance	Level 1	Level 2	
Part Number	Value (Ohms)	Rating (W)	Type (^)	(@)	Tolerance (%)	(FRL) (&)	(FRL) (&)	Manufacturer
RN^65@2133%&	213,000	1/4	C, N, R	H, J, K, C, E	B, D	S	P, R	ANG,DAL
RN^65@2153%&	215,000	1/4	C, N, R	H, J, K, C, E	B, D, F	S	P, R	ANG,DAL
RN^65@2183%&	218,000	1/4	C, N, R	H, J, K, C, E	B, D	S	P, R	ANG,DAL
RN^65@2213%&	221,000	1/4	C, N, R	H, J, K, C, E	B, D, F	S	P, R	ANG,DAL
RN^65@2233%&	223,000	1/4	C, N, R	H, J, K, C, E	B, D	S	P, R	ANG,DAL
RN^65@2263%&	226,000	1/4	C, N, R	H, J, K, C, E	B, D, F	S	P, R	ANG,DAL
RN^65@2293%&	229,000	1/4	C, N, R	H, J, K, C, E	B, D	S	P, R	ANG,DAL
RN^65@2323%&	232,000	1/4	C, N, R	H, J, K, C, E	B, D, F	S	P, R	ANG,DAL
RN^65@2343%&	234,000	1/4	C, N, R	H, J, K, C, E	B, D	S	P, R	ANG,DAL
	Resistance	Power	Term.	Char.	Resistance	Level 1	Level 2	
Part Number	Value (Ohms)	Rating (W)	Type (^)	(@)	Tolerance (%)	(FRL) (&)	(FRL) (&)	Manufacturer
RN^65@2373%&	237,000	1/4	C, N, R	H, J, K, C, E	B, D, F	S	P, R	ANG,DAL
RN^65@2403%&	240,000	1/4	C, N, R	H, J, K, C, E	B, D	S	P, R	ANG,DAL
RN^65@2433%&	243,000	1/4	C, N, R	H, J, K, C, E	B, D, F	S	P, R	ANG,DAL

RN^65@2463%&	246,000	1/4	C, N, R	H, J, K, C, E	B, D	S	P, R	ANG,DAL
RN^65@2493%&	249,000	1/4	C, N, R	H, J, K, C, E	B, D, F	S	P, R	ANG,DAL
RN^65@2523%&	252,000	1/4	C, N, R	H, J, K, C, E	B, D	S	P, R	ANG,DAL
RN^65@2553%&	255,000	1/4	C, N, R	H, J, K, C, E	B, D, F	S	P, R	ANG,DAL
RN^65@2583%&	258,000	1/4	C, N, R	H, J, K, C, E	B, D	S	P, R	ANG,DAL
RN^65@2613%&	261,000	1/4	C, N, R	H, J, K, C, E	B, D, F	S	P, R	ANG,DAL
	Resistance	Power	Term.	Char.	Resistance	Level 1	Level 2	
Part Number	Value (Ohms)	Rating (W)	Type (^)	(@)	Tolerance (%)	(FRL) (&)	(FRL) (&)	Manufacturer
RN^65@2643%&	264,000	1/4	C, N, R	H, J, K, C, E	B, D	S	P, R	ANG,DAL
RN^65@2673%&	267,000	1/4	C, N, R	H, J, K, C, E	B, D, F	S	P, R	ANG,DAL
RN^65@2713%&	271,000	1/4	C, N, R	H, J, K, C, E	B, D	S	P, R	ANG,DAL
RN^65@2743%&	274,000	1/4	C, N, R	H, J, K, C, E	B, D, F	S	P, R	ANG,DAL
RN^65@2773%&	277,000	1/4	C, N, R	H, J, K, C, E	B, D	S	P, R	ANG,DAL
RN^65@2803%&	280,000	1/4	C, N, R	H, J, K, C, E	B, D, F	S	P, R	ANG,DAL
RN^65@2843%&	284,000	1/4	C, N, R	H, J, K, C, E	B, D	S	P, R	ANG,DAL
RN^65@2873%&	287,000	1/4	C, N, R	H, J, K, C, E	B, D, F	S	P, R	ANG,DAL
RN^65@2913%&	291,000	1/4	C, N, R	H, J, K, C, E	B, D	S	P, R	ANG,DAL
	Resistance	Power	Term.	Char.	Resistance	Level 1	Level 2	
Part Number	Value (Ohms)	Rating (W)	Type (^)	(@)	Tolerance (%)	(FRL) (&)	(FRL) (&)	Manufacturer
RN^65@2943%&	294,000	1/4	C, N, R	H, J, K, C, E	B, D, F	S	P, R	ANG,DAL
RN^65@2983%&	298,000	1/4	C, N, R	H, J, K, C, E	B, D	S	P, R	ANG,DAL
RN^65@3013%&	301,000	1/4	C, N, R	H, J, K, C, E	B, D, F	S	P, R	ANG,DAL
RN^65@3053%&	305,000	1/4	C, N, R	H, J, K, C, E	B, D	S	P, R	ANG,DAL
RN^65@3093%&	309,000	1/4	C, N, R	H, J, K, C, E	B, D, F	S	P, R	ANG,DAL
RN^65@3123%&	312,000	1/4	C, N, R	H, J, K, C, E	B, D	S	P, R	ANG,DAL
RN^65@3163%&	316,000	1/4	C, N, R	H, J, K, C, E	B, D, F	S	P, R	ANG,DAL
RN^65@3203%&	320,000	1/4	C, N, R	H, J, K, C, E	B, D	S	P, R	ANG,DAL
RN^65@3243%&	324,000	1/4	C, N, R	H, J, K, C, E	B, D, F	S	P, R	ANG,DAL
	Resistance	Power	Term.	Char.	Resistance	Level 1	Level 2	
Part Number	Value (Ohms)	Rating (W)	Type (^)	(@)	Tolerance (%)	(FRL) (&)	(FRL) (&)	Manufacturer
RN^65@3283%&	328,000	1/4	C, N, R	H, J, K, C, E	B, D	S	P, R	ANG,DAL
RN^65@3323%&	332,000	1/4	C, N, R	H, J, K, C, E	B, D, F	S	P, R	ANG,DAL
RN^65@3363%&	336,000	1/4	C, N, R	H, J, K, C, E	B, D	S	P, R	ANG,DAL
RN^65@3403%&	340,000	1/4	C, N, R	H, J, K, C, E	B, D, F	S	P, R	ANG,DAL
RN^65@3443%&	344,000	1/4	C, N, R	H, J, K, C, E	B, D	S	P, R	ANG,DAL
RN^65@3483%&	348,000	1/4	C, N, R	H, J, K, C, E	B, D, F	S	P, R	ANG,DAL
RN^65@3523%&	352,000	1/4	C, N, R	H, J, K, C, E	B, D	S	P, R	ANG,DAL
RN^65@3573%&	357,000	1/4	C, N, R	H, J, K, C, E	B, D, F	S	P, R	ANG,DAL
RN^65@3613%&	361,000	1/4	C, N, R	H, J, K, C, E	B, D	S	P, R	ANG,DAL
	Resistance	Power	Term.	Char.	Resistance	Level 1	Level 2	
Part Number	Value (Ohms)	Rating (W)	Type (^)	(@)	Tolerance (%)	(FRL) (&)	(FRL) (&)	Manufacturer
RN^65@3653%&	365,000	1/4	C, N, R	H, J, K, C, E	B, D, F	S	P, R	ANG,DAL
RN^65@3703%&	370,000	1/4	C, N, R	H, J, K, C, E	B, D	S	P, R	ANG,DAL
RN^65@3743%&	374,000	1/4	C, N, R	H, J, K, C, E	B, D, F	S	P, R	ANG,DAL
RN^65@3793%&	379,000	1/4	C, N, R	H, J, K, C, E	B, D	S	P, R	ANG,DAL
RN^65@3833%&	383,000	1/4	C, N, R	H, J, K, C, E	B, D, F	S	P, R	ANG,DAL
RN^65@3883%&	388,000	1/4	C, N, R	H, J, K, C, E	B, D	S	P, R	ANG,DAL

RN^65@3923%&	392,000	1/4	C, N, R	H, J, K, C, E	B, D, F	S	P, R	ANG,DAL
RN^65@3973%&	397,000	1/4	C, N, R	H, J, K, C, E	B, D	S	P, R	ANG,DAL
RN^65@4023%&	402,000	1/4	C, N, R	H, J, K, C, E	B, D, F	S	P, R	ANG,DAL
	Resistance	Power	Term.	Char.	Resistance	Level 1	Level 2	
Part Number	Value (Ohms)	Rating (W)	Type (^)	(@)	Tolerance (%)	(FRL) (&)	(FRL) (&)	Manufacturer
	Resistance	Power	Term.	Char.	Resistance	Level 1	Level 2	
Part Number	Value (Ohms)	Rating (W)	Type (^)	(@)	Tolerance (%)	(FRL) (&)	(FRL) (&)	Manufacturer
RN^65@4073%&	407,000	1/4	C, N, R	H, J, K, C, E	B, D	S	P, R	ANG,DAL
RN^65@4123%&	412,000	1/4	C, N, R	H, J, K, C, E	B, D, F	S	P, R	ANG,DAL
RN^65@4173%&	417,000	1/4	C, N, R	H, J, K, C, E	B, D	S	P, R	ANG,DAL
RN^65@4223%&	422,000	1/4	C, N, R	H, J, K, C, E	B, D, F	S	P, R	ANG,DAL
RN^65@4273%&	427,000	1/4	C, N, R	H, J, K, C, E	B, D	S	P, R	ANG,DAL
RN^65@4323%&	432,000	1/4	C, N, R	H, J, K, C, E	B, D, F	S	P, R	ANG,DAL
RN^65@4373%&	437,000	1/4	C, N, R	H, J, K, C, E	B, D	S	P, R	ANG,DAL
RN^65@4423%&	442,000	1/4	C, N, R	H, J, K, C, E	B, D, F	S	P, R	ANG,DAL
RN^65@4483%&	448,000	1/4	C, N, R	H, J, K, C, E	B, D	S	P, R	ANG,DAL
	Resistance	Power	Term.	Char.	Resistance	Level 1	Level 2	
Part Number	Value (Ohms)	Rating (W)	Type (^)	(@)	Tolerance (%)	(FRL) (&)	(FRL) (&)	Manufacturer
RN^65@4533%&	453,000	1/4	C, N, R	H, J, K, C, E	B, D, F	S	P, R	ANG,DAL
RN^65@4593%&	459,000	1/4	C, N, R	H, J, K, C, E	B, D	S	P, R	ANG,DAL
RN^65@4643%&	464,000	1/4	C, N, R	H, J, K, C, E	B, D, F	S	P, R	ANG,DAL
RN^65@4703%&	470,000	1/4	C, N, R	H, J, K, C, E	B, D	S	P, R	ANG,DAL
RN^65@4753%&	475,000	1/4	C, N, R	H, J, K, C, E	B, D, F	S	P, R	ANG,DAL
RN^65@4813%&	481,000	1/4	C, N, R	H, J, K, C, E	B, D	S	P, R	ANG,DAL
RN^65@4873%&	487,000	1/4	C, N, R	H, J, K, C, E	B, D, F	S	P, R	ANG,DAL
RN^65@4933%&	493,000	1/4	C, N, R	H, J, K, C, E	B, D	S	P, R	ANG,DAL
RN^65@4993%&	499,000	1/4	C, N, R	H, J, K, C, E	B, D, F	S	P, R	ANG,DAL
	Resistance	Power	Term.	Char.	Resistance	Level 1	Level 2	
Part Number	Value (Ohms)	Rating (W)	Type (^)	(@)	Tolerance (%)	(FRL) (&)	(FRL) (&)	Manufacturer
RN^65@5053%&	505,000	1/4	C, N, R	H, J, K, C, E	B, D		P, R	ANG, DAL
RN^65@5113%&	511,000	1/4	C, N, R	H, J, K, C, E	B, D, F		P, R	ANG, DAL
RN^65@5173%&	517,000	1/4	C, N, R	H, J, K, C, E	B, D		P, R	ANG, DAL
RN^65@5233%&	523,000	1/4	C, N, R	H, J, K, C, E	B, D, F		P, R	ANG, DAL
RN^65@5303%&	530,000	1/4	C, N, R	H, J, K, C, E	B, D		P, R	ANG, DAL
RN^65@5363%&	536,000	1/4	C, N, R	H, J, K, C, E	B, D, F		P, R	ANG, DAL
RN^65@5423%&	542,000	1/4	C, N, R	H, J, K, C, E	B, D		P, R	ANG, DAL
RN^65@5493%&	549,000	1/4	C, N, R	H, J, K, C, E	B, D, F		P, R	ANG, DAL
RN^65@5563%&	556,000	1/4	C, N, R	H, J, K, C, E	B, D		P, R	ANG, DAL
	Resistance	Power	Term.	Char.	Resistance	Level 1	Level 2	
Part Number	Value (Ohms)	Rating (W)	Type (^)	(@)	Tolerance (%)	(FRL) (&)	(FRL) (&)	Manufacturer
RN^65@5623%&	562,000	1/4	C, N, R	H, J, K, C, E	B, D, F		P, R	ANG, DAL
RN^65@5693%&	569,000	1/4	C, N, R	H, J, K, C, E	B, D		P, R	ANG, DAL
RN^65@5763%&	576,000	1/4	C, N, R	H, J, K, C, E	B, D, F		P, R	ANG, DAL
RN^65@5833%&	583,000	1/4	C, N, R	H, J, K, C, E	B, D		P, R	ANG, DAL
RN^65@5903%&	590,000	1/4	C, N, R	H, J, K, C, E	B, D, F		P, R	ANG, DAL
RN^65@5973%&	597,000	1/4	C, N, R	H, J, K, C, E	B, D		P, R	ANG, DAL
RN^65@6043%&	604,000	1/4	C, N, R	H, J, K, C, E	B, D, F		P, R	ANG, DAL

RN^65@6123%&	612,000	1/4	C, N, R	H, J, K, C, E	B, D		P, R	ANG, DAL
RN^65@6193%&	619,000	1/4	C, N, R	H, J, K, C, E	B, D, F		P, R	ANG, DAL
	Resistance	Power	Term.	Char.	Resistance	Level 1	Level 2	
Part Number	Value (Ohms)	Rating (W)	Type (^)	(@)	Tolerance (%)	(FRL) (&)	(FRL) (&)	Manufacturer
RN^65@6263%&	626,000	1/4	C, N, R	H, J, K, C, E	B, D		P, R	ANG, DAL
RN^65@6343%&	634,000	1/4	C, N, R	H, J, K, C, E	B, D, F		P, R	ANG, DAL
RN^65@6423%&	642,000	1/4	C, N, R	H, J, K, C, E	B, D		P, R	ANG, DAL
RN^65@6493%&	649,000	1/4	C, N, R	H, J, K, C, E	B, D, F		P, R	ANG, DAL
RN^65@6573%&	657,000	1/4	C, N, R	H, J, K, C, E	B, D		P, R	ANG, DAL
RN^65@6653%&	665,000	1/4	C, N, R	H, J, K, C, E	B, D, F		P, R	ANG, DAL
RN^65@6733%&	673,000	1/4	C, N, R	H, J, K, C, E	B, D		P, R	ANG, DAL
RN^65@6813%&	681,000	1/4	C, N, R	H, J, K, C, E	B, D, F		P, R	ANG, DAL
RN^65@6903%&	690,000	1/4	C, N, R	H, J, K, C, E	B, D		P, R	ANG, DAL
	Resistance	Power	Term.	Char.	Resistance	Level 1	Level 2	
Part Number	Value (Ohms)	Rating (W)	Type (^)	(@)	Tolerance (%)	(FRL) (&)	(FRL) (&)	Manufacturer
RN^65@6983%&	698,000	1/4	C, N, R	H, J, K, C, E	B, D, F		P, R	ANG, DAL
RN^65@7063%&	706,000	1/4	C, N, R	H, J, K, C, E	B, D		P, R	ANG, DAL
RN^65@7153%&	715,000	1/4	C, N, R	H, J, K, C, E	B, D, F		P, R	ANG, DAL
RN^65@7233%&	723,000	1/4	C, N, R	H, J, K, C, E	B, D		P, R	ANG, DAL
RN^65@7323%&	732,000	1/4	C, N, R	H, J, K, C, E	B, D, F		P, R	ANG, DAL
RN^65@7413%&	741,000	1/4	C, N, R	H, J, K, C, E	B, D		P, R	ANG, DAL
RN^65@7503%&	750,000	1/4	C, N, R	H, J, K, C, E	B, D, F		P, R	ANG, DAL
RN^65@7593%&	759,000	1/4	C, N, R	H, J, K, C, E	B, D		P, R	ANG, DAL
RN^65@7683%&	768,000	1/4	C, N, R	H, J, K, C, E	B, D, F		P, R	ANG, DAL
	Resistance	Power	Term.	Char.	Resistance	Level 1	Level 2	
Part Number	Value (Ohms)	Rating (W)	Type (^)	(@)	Tolerance (%)	(FRL) (&)	(FRL) (&)	Manufacturer
RN^65@7773%&	777,000	1/4	C, N, R	H, J, K, C, E	B, D		P, R	ANG, DAL
RN^65@7873%&	787,000	1/4	C, N, R	H, J, K, C, E	B, D, F		P, R	ANG, DAL
RN^65@7963%&	796,000	1/4	C, N, R	H, J, K, C, E	B, D		P, R	ANG, DAL
RN^65@8063%&	806,000	1/4	C, N, R	H, J, K, C, E	B, D, F		P, R	ANG, DAL
RN^65@8163%&	816,000	1/4	C, N, R	H, J, K, C, E	B, D		P, R	ANG, DAL
RN^65@8253%&	825,000	1/4	C, N, R	H, J, K, C, E	B, D, F		P, R	ANG, DAL
RN^65@8353%&	835,000	1/4	C, N, R	H, J, K, C, E	B, D		P, R	ANG, DAL
RN^65@8453%&	845,000	1/4	C, N, R	H, J, K, C, E	B, D, F		P, R	ANG, DAL
RN^65@8563%&	856,000	1/4	C, N, R	H, J, K, C, E	B, D		P, R	ANG, DAL
	Resistance	Power	Term.	Char.	Resistance	Level 1	Level 2	
Part Number	Value (Ohms)	Rating (W)	Type (^)	(@)	Tolerance (%)	(FRL) (&)	(FRL) (&)	Manufacturer
RN^65@8663%&	866,000	1/4	C, N, R	H, J, K, C, E	B, D, F		P, R	ANG, DAL
RN^65@8763%&	876,000	1/4	C, N, R	H, J, K, C, E	B, D		P, R	ANG, DAL
RN^65@8873%&	887,000	1/4	C, N, R	H, J, K, C, E	B, D, F		P, R	ANG, DAL
RN^65@8983%&	898,000	1/4	C, N, R	H, J, K, C, E	B, D		P, R	ANG, DAL
RN^65@9093%&	909,000	1/4	C, N, R	H, J, K, C, E	B, D, F		P, R	ANG, DAL
RN^65@9203%&	920,000	1/4	C, N, R	H, J, K, C, E	B, D		P, R	ANG, DAL
RN^65@9313%&	931,000	1/4	C, N, R	H, J, K, C, E	B, D, F		P, R	ANG, DAL
RN^65@9423%&	942,000	1/4	C, N, R	H, J, K, C, E	B, D		P, R	ANG, DAL
RN^65@9533%&	953,000	1/4	C, N, R	H, J, K, C, E	B, D, F		P, R	ANG, DAL
	Resistance	Power	Term.	Char.	Resistance	Level 1	Level 2	

Part Number	Value (Ohms)	Rating (W)	Type (^)	(@)	Tolerance (%)	(FRL) (&)	(FRL) (&)	Manufacturer
RN^65@9653%&	965,000	1/4	C, N, R	H, J, K, C, E	B, D		P, R	ANG, DAL
RN^65@9763%&	976,000	1/4	C, N, R	H, J, K, C, E	B, D, F		P, R	ANG, DAL
RN^65@9883%&	988,000	1/4	C, N, R	H, J, K, C, E	B, D		P, R	ANG, DAL
	Resistance	Power	Term.	Char.	Resistance	Level 1	Level 2	
Part Number	Value (Ohms)	Rating (W)	Type (^)	(@)	Tolerance (%)	(FRL) (&)	(FRL) (&)	Manufacturer
	Resistance	Power	Term.	Char.	Resistance	Level 1	Level 2	
Part Number	Value (Ohms)	Rating (W)	Type (^)	(@)	Tolerance (%)	(FRL) (&)	(FRL) (&)	Manufacturer
	Resistance	Power	Term.	Char.	Resistance	Level 1	Level 2	
Part Number	Value (Ohms)	Rating (W)	Type (^)	(@)	Tolerance (%)	(FRL) (&)	(FRL) (&)	Manufacturer
	Resistance	Power	Term.	Char.	Resistance	Level 1	Level 2	
Part Number	Value (Ohms)	Rating (W)	Type (^)	(@)	Tolerance (%)	(FRL) (&)	(FRL) (&)	Manufacturer

RN^65 Film Resistors: 1,000,000 Ohms through 4,990,000 Ohms

	Resistance	Power	Term.	Char.	Resistance	Level 1	Level 2	
Part Number	Value (Ohms)	Rating (W)	Type (^)	(@)	Tolerance (%)	(FRL) (&)	(FRL) (&)	Manufacturer
RN^65@1004%&	1,000,000	1/4	C, N, R	H, J, K, C, E	B, D, F		P, R	ANG, DAL
RN^65@1014%&	1,010,000	1/4	C, N, R	H, J, K, C, E	B, D		P, R	ANG, DAL
RN^65@1024%&	1,020,000	1/4	C, N, R	H, J, K, C, E	B, D, F		P, R	ANG, DAL
RN^65@1044%&	1,040,000	1/4	C, N, R	H, J, K, C, E	B, D		P, R	ANG, DAL
RN^65@1054%&	1,050,000	1/4	C, N, R	H, J, K, C, E	B, D, F		P, R	ANG, DAL
RN^65@1064%&	1,060,000	1/4	C, N, R	H, J, K, C, E	B, D		P, R	ANG, DAL
RN^65@1074%&	1,070,000	1/4	C, N, R	H, J, K, C, E	B, D, F		P, R	ANG, DAL
RN^65@1094%&	1,090,000	1/4	C, N, R	H, J, K, C, E	B, D		P, R	ANG, DAL
RN^65@1104%&	1,100,000	1/4	C, N, R	H, J, K, C, E	B, D, F		P, R	ANG, DAL
	Resistance	Power	Term.	Char.	Resistance	Level 1	Level 2	
Part Number	Value (Ohms)	Rating (W)	Type (^)	(@)	Tolerance (%)	(FRL) (&)	(FRL) (&)	Manufacturer
RN^65@1114%&	1,110,000	1/4	C, N, R	H, J, K, C, E	B, D		P, R	ANG, DAL
RN^65@1134%&	1,130,000	1/4	C, N, R	H, J, K, C, E	B, D, F		P, R	ANG, DAL
RN^65@1144%&	1,140,000	1/4	C, N, R	H, J, K, C, E	B, D		P, R	ANG, DAL
RN^65@1154%&	1,150,000	1/4	C, N, R	H, J, K, C, E	B, D, F		P, R	ANG, DAL
RN^65@1174%&	1,170,000	1/4	C, N, R	H, J, K, C, E	B, D		P, R	ANG, DAL
RN^65@1184%&	1,180,000	1/4	C, N, R	H, J, K, C, E	B, D, F		P, R	ANG, DAL
RN^65@1204%&	1,200,000	1/4	C, N, R	H, J, K, C, E	B, D		P, R	ANG, DAL
RN^65@1214%&	1,210,000	1/4	C, N, R	H, J, K, C, E	B, D, F		P, R	ANG, DAL
RN^65@1234%&	1,230,000	1/4	C, N, R	H, J, K, C, E	B, D		P, R	ANG, DAL
	Resistance	Power	Term.	Char.	Resistance	Level 1	Level 2	
Part Number	Value (Ohms)	Rating (W)	Type (^)	(@)	Tolerance (%)	(FRL) (&)	(FRL) (&)	Manufacturer
RN^65@1244%&	1,240,000	1/4	C, N, R	H, J, K, C, E	B, D, F		P, R	ANG, DAL
RN^65@1264%&	1,260,000	1/4	C, N, R	H, J, K, C, E	B, D		P, R	ANG, DAL
RN^65@1274%&	1,270,000	1/4	C, N, R	H, J, K, C, E	B, D, F		P, R	ANG, DAL
RN^65@1294%&	1,290,000	1/4	C, N, R	H, J, K, C, E	B, D		P, R	ANG, DAL
RN^65@1304%&	1,300,000	1/4	C, N, R	H, J, K, C, E	B, D, F		P, R	ANG, DAL
RN^65@1324%&	1,320,000	1/4	C, N, R	H, J, K, C, E	B, D		P, R	ANG, DAL

RN^65@1334%&	1,330,000	1/4	C, N, R	H, J, K, C, E	B, D, F		P, R	ANG, DAL
RN^65@1354%&	1,350,000	1/4	C, N, R	H, J, K, C, E	B, D		P, R	ANG, DAL
RN^65@1374%&	1,370,000	1/4	C, N, R	H, J, K, C, E	B, D, F		P, R	ANG, DAL
	Resistance	Power	Term.	Char.	Resistance	Level 1	Level 2	
Part Number	Value (Ohms)	Rating (W)	Type (^)	(@)	Tolerance (%)	(FRL) (&)	(FRL) (&)	Manufacturer
RN^65@1384%&	1,380,000	1/4	C, N, R	H, J, K, C, E	B, D		P, R	ANG, DAL
RN^65@1404%&	1,400,000	1/4	C, N, R	H, J, K, C, E	B, D, F		P, R	ANG, DAL
RN^65@1424%&	1,420,000	1/4	C, N, R	H, J, K, C, E	B, D		P, R	ANG, DAL
RN^65@1434%&	1,430,000	1/4	C, N, R	H, J, K, C, E	B, D, F		P, R	ANG, DAL
RN^65@1454%&	1,450,000	1/4	C, N, R	H, J, K, C, E	B, D		P, R	ANG, DAL
RN^65@1474%&	1,470,000	1/4	C, N, R	H, J, K, C, E	B, D, F		P, R	ANG, DAL
RN^65@1494%&	1,490,000	1/4	C, N, R	H, J, K, C, E	B, D		P, R	ANG, DAL
RN^65@1504%&	1,500,000	1/4	C, N, R	H, J, K, C, E	B, D, F		P, R	ANG, DAL
RN^65@1524%&	1,520,000	1/4	C, N, R	H, J, K, C, E	B, D		P, R	ANG, DAL
	Resistance	Power	Term.	Char.	Resistance	Level 1	Level 2	
Part Number	Value (Ohms)	Rating (W)	Type (^)	(@)	Tolerance (%)	(FRL) (&)	(FRL) (&)	Manufacturer
RN^65@1544%&	1,540,000	1/4	C, N, R	H, J, K, C, E	B, D, F		P, R	ANG, DAL
RN^65@1564%&	1,560,000	1/4	C, N, R	H, J, K, C, E	B, D		P, R	ANG, DAL
RN^65@1584%&	1,580,000	1/4	C, N, R	H, J, K, C, E	B, D, F		P, R	ANG, DAL
RN^65@1604%&	1,600,000	1/4	C, N, R	H, J, K, C, E	B, D		P, R	ANG, DAL
RN^65@1624%&	1,620,000	1/4	C, N, R	H, J, K, C, E	B, D, F		P, R	ANG, DAL
RN^65@1644%&	1,640,000	1/4	C, N, R	H, J, K, C, E	B, D		P, R	ANG, DAL
RN^65@1654%&	1,650,000	1/4	C, N, R	H, J, K, C, E	B, D, F		P, R	ANG, DAL
RN^65@1674%&	1,670,000	1/4	C, N, R	H, J, K, C, E	B, D		P, R	ANG, DAL
RN^65@1694%&	1,690,000	1/4	C, N, R	H, J, K, C, E	B, D, F		P, R	ANG, DAL
	Resistance	Power	Term.	Char.	Resistance	Level 1	Level 2	
Part Number	Value (Ohms)	Rating (W)	Type (^)	(@)	Tolerance (%)	(FRL) (&)	(FRL) (&)	Manufacturer
RN^65@1724%&	1,720,000	1/4	C, N, R	H, J, K, C, E	B, D		P, R	ANG, DAL
RN^65@1744%&	1,740,000	1/4	C, N, R	H, J, K, C, E	B, D, F		P, R	ANG, DAL
RN^65@1764%&	1,760,000	1/4	C, N, R	H, J, K, C, E	B, D		P, R	ANG, DAL
RN^65@1784%&	1,780,000	1/4	C, N, R	H, J, K, C, E	B, D, F		P, R	ANG, DAL
RN^65@1804%&	1,800,000	1/4	C, N, R	H, J, K, C, E	B, D		P, R	ANG, DAL
RN^65@1824%&	1,820,000	1/4	C, N, R	H, J, K, C, E	B, D, F		P, R	ANG, DAL
RN^65@1844%&	1,840,000	1/4	C, N, R	H, J, K, C, E	B, D		P, R	ANG, DAL
RN^65@1874%&	1,870,000	1/4	C, N, R	H, J, K, C, E	B, D, F		P, R	ANG, DAL
RN^65@1894%&	1,890,000	1/4	C, N, R	H, J, K, C, E	B, D		P, R	ANG, DAL
	Resistance	Power	Term.	Char.	Resistance	Level 1	Level 2	
Part Number	Value (Ohms)	Rating (W)	Type (^)	(@)	Tolerance (%)	(FRL) (&)	(FRL) (&)	Manufacturer
RN^65@1914%&	1,910,000	1/4	C, N, R	H, J, K, C, E	B, D, F		P, R	ANG, DAL
RN^65@1934%&	1,930,000	1/4	C, N, R	H, J, K, C, E	B, D		P, R	ANG, DAL
RN^65@1964%&	1,960,000	1/4	C, N, R	H, J, K, C, E	B, D, F		P, R	ANG, DAL
RN^65@1984%&	1,980,000	1/4	C, N, R	H, J, K, C, E	B, D		P, R	ANG, DAL
RN^65@2004%&	2,000,000	1/4	C, N, R	H, J, K, C, E	B, D, F		P, R	ANG, DAL
RN^65@2034%&	2,030,000	1/4	C, N, R	H, J, K, C, E	B, D		P, R	ANG, DAL
RN^65@2054%&	2,050,000	1/4	C, N, R	H, J, K, C, E	B, D, F		P, R	ANG, DAL
RN^65@2084%&	2,080,000	1/4	C, N, R	H, J, K, C, E	B, D		P, R	ANG, DAL
RN^65@2104%&	2,100,000	1/4	C, N, R	H, J, K, C, E	B, D, F		P, R	ANG, DAL

	Resistance	Power	Term.	Char.	Resistance	Level 1	Level 2	
Part Number	Value (Ohms)	Rating (W)	Type (^)	(@)	Tolerance (%)	(FRL) (&)	(FRL) (&)	Manufacturer
RN^65@2134%&	2,130,000	1/4	C, N, R	H, J, K, C, E	B, D		P, R	ANG, DAL
RN^65@2154%&	2,150,000	1/4	C, N, R	H, J, K, C, E	B, D, F		P, R	ANG, DAL
RN^65@2184%&	2,180,000	1/4	C, N, R	H, J, K, C, E	B, D		P, R	ANG, DAL
RN^65@2214%&	2,210,000	1/4	C, N, R	H, J, K, C, E	B, D, F		P, R	ANG, DAL
RN^65@2234%&	2,230,000	1/4	C, N, R	H, J, K, C, E	B, D		P, R	ANG, DAL
RN^65@2264%&	2,260,000	1/4	C, N, R	H, J, K, C, E	B, D, F		P, R	ANG, DAL
RN^65@2294%&	2,290,000	1/4	C, N, R	H, J, K, C, E	B, D		P, R	ANG, DAL
RN^65@2324%&	2,320,000	1/4	C, N, R	H, J, K, C, E	B, D, F		P, R	ANG, DAL
RN^65@2344%&	2,340,000	1/4	C, N, R	H, J, K, C, E	B, D		P, R	ANG, DAL
	Resistance	Power	Term.	Char.	Resistance	Level 1	Level 2	
Part Number	Value (Ohms)	Rating (W)	Type (^)	(@)	Tolerance (%)	(FRL) (&)	(FRL) (&)	Manufacturer
	Resistance	Power	Term.	Char.	Resistance	Level 1	Level 2	
Part Number	Value (Ohms)	Rating (W)	Type (^)	(@)	Tolerance (%)	(FRL) (&)	(FRL) (&)	Manufacturer
RN^65@2374%&	2,370,000	1/4	C, N, R	H, J, K, C, E	B, D, F		P, R	ANG, DAL
RN^65@2404%&	2,400,000	1/4	C, N, R	H, J, K, C, E	B, D		P, R	ANG, DAL
RN^65@2434%&	2,430,000	1/4	C, N, R	H, J, K, C, E	B, D, F		P, R	ANG, DAL
RN^65@2464%&	2,460,000	1/4	C, N, R	H, J, K, C, E	B, D		P, R	ANG, DAL
RN^65@2494%&	2,490,000	1/4	C, N, R	H, J, K, C, E	B, D, F		P, R	ANG, DAL
RN^65@2524%&	2,520,000	1/4	C, N, R	H, J, K, C, E	B, D		P, R	ANG, DAL
RN^65@2554%&	2,550,000	1/4	C, N, R	H, J, K, C, E	B, D, F		P, R	ANG, DAL
RN^65@2584%&	2,580,000	1/4	C, N, R	H, J, K, C, E	B, D		P, R	ANG, DAL
RN^65@2614%&	2,610,000	1/4	C, N, R	H, J, K, C, E	B, D, F		P, R	ANG, DAL
	Resistance	Power	Term.	Char.	Resistance	Level 1	Level 2	
Part Number	Value (Ohms)	Rating (W)	Type (^)	(@)	Tolerance (%)	(FRL) (&)	(FRL) (&)	Manufacturer
RN^65@2644%&	2,640,000	1/4	C, N, R	H, J, K, C, E	B, D		P, R	ANG, DAL
RN^65@2674%&	2,670,000	1/4	C, N, R	H, J, K, C, E	B, D, F		P, R	ANG, DAL
RN^65@2714%&	2,710,000	1/4	C, N, R	H, J, K, C, E	B, D		P, R	ANG, DAL
RN^65@2744%&	2,740,000	1/4	C, N, R	H, J, K, C, E	B, D, F		P, R	ANG, DAL
RN^65@2774%&	2,770,000	1/4	C, N, R	H, J, K, C, E	B, D		P, R	ANG, DAL
RN^65@2804%&	2,800,000	1/4	C, N, R	H, J, K, C, E	B, D, F		P, R	ANG, DAL
RN^65@2844%&	2,840,000	1/4	C, N, R	H, J, K, C, E	B, D		P, R	ANG, DAL
RN^65@2874%&	2,870,000	1/4	C, N, R	H, J, K, C, E	B, D, F		P, R	ANG, DAL
RN^65@2914%&	2,910,000	1/4	C, N, R	H, J, K, C, E	B, D		P, R	ANG, DAL
	Resistance	Power	Term.	Char.	Resistance	Level 1	Level 2	
Part Number	Value (Ohms)	Rating (W)	Type (^)	(@)	Tolerance (%)	(FRL) (&)	(FRL) (&)	Manufacturer
RN^65@2944%&	2,940,000	1/4	C, N, R	H, J, K, C, E	B, D, F		P, R	ANG, DAL
RN^65@2984%&	2,980,000	1/4	C, N, R	H, J, K, C, E	B, D		P, R	ANG, DAL
RN^65@3014%&	3,010,000	1/4	C, N, R	H, J, K, C, E	B, D, F		P, R	ANG, DAL
RN^65@3054%&	3,050,000	1/4	N, R	C, E	B, D		P	ANG
RN^65@3094%&	3,090,000	1/4	N, R	C, E	B, D, F		P	ANG
RN^65@3124%&	3,120,000	1/4	N, R	C, E	B, D		P	ANG
RN^65@3164%&	3,160,000	1/4	N, R	C, E	B, D, F		P	ANG
RN^65@3204%&	3,200,000	1/4	N, R	C, E	B, D		P	ANG
RN^65@3244%&	3,240,000	1/4	N, R	C, E	B, D, F		P	ANG
	Resistance	Power	Term.	Char.	Resistance	Level 1	Level 2	

Part Number	Value (Ohms)	Rating (W)	Type (^)	(@)	Tolerance (%)	(FRL) (&)	(FRL) (&)	Manufacturer
RN^65@3284%&	3,280,000	1/4	N, R	C, E	B, D		P	ANG
RN^65@3324%&	3,320,000	1/4	N, R	C, E	B, D, F		P	ANG
RN^65@3364%&	3,360,000	1/4	N, R	C, E	B, D		P	ANG
RN^65@3404%&	3,400,000	1/4	N, R	C, E	B, D, F		P	ANG
RN^65@3444%&	3,440,000	1/4	N, R	C, E	B, D		P	ANG
RN^65@3484%&	3,480,000	1/4	N, R	C, E	B, D, F		P	ANG
RN^65@3524%&	3,520,000	1/4	N, R	C, E	B, D		P	ANG
RN^65@3574%&	3,570,000	1/4	N, R	C, E	B, D, F		P	ANG
RN^65@3614%&	3,610,000	1/4	N, R	C, E	B, D		P	ANG
	Resistance	Power	Term.	Char.	Resistance	Level 1	Level 2	
Part Number	Value (Ohms)	Rating (W)	Type (^)	(@)	Tolerance (%)	(FRL) (&)	(FRL) (&)	Manufacturer
RN^65@3654%&	3,650,000	1/4	N, R	C, E	B, D, F		P	ANG
RN^65@3704%&	3,700,000	1/4	N, R	C, E	B, D		P	ANG
RN^65@3744%&	3,740,000	1/4	N, R	C, E	B, D, F		P	ANG
RN^65@3794%&	3,790,000	1/4	N, R	C, E	B, D		P	ANG
RN^65@3834%&	3,830,000	1/4	N, R	C, E	B, D, F		P	ANG
RN^65@3884%&	3,880,000	1/4	N, R	C, E	B, D		P	ANG
RN^65@3924%&	3,920,000	1/4	N, R	C, E	B, D, F		P	ANG
RN^65@3974%&	3,970,000	1/4	N, R	C, E	B, D		P	ANG
RN^65@4024%&	4,020,000	1/4	N, R	C, E	B, D, F		P	ANG
	Resistance	Power	Term.	Char.	Resistance	Level 1	Level 2	
Part Number	Value (Ohms)	Rating (W)	Type (^)	(@)	Tolerance (%)	(FRL) (&)	(FRL) (&)	Manufacturer
RN^65@4074%&	4,070,000	1/4	N, R	C, E	B, D		P	ANG
RN^65@4124%&	4,120,000	1/4	N, R	C, E	B, D, F		P	ANG
RN^65@4174%&	4,170,000	1/4	N, R	C, E	B, D		P	ANG
RN^65@4224%&	4,220,000	1/4	N, R	C, E	B, D, F		P	ANG
RN^65@4274%&	4,270,000	1/4	N, R	C, E	B, D		P	ANG
RN^65@4324%&	4,320,000	1/4	N, R	C, E	B, D, F		P	ANG
RN^65@4374%&	4,370,000	1/4	N, R	C, E	B, D		P	ANG
RN^65@4424%&	4,420,000	1/4	N, R	C, E	B, D, F		P	ANG
RN^65@4484%&	4,480,000	1/4	N, R	C, E	B, D		P	ANG
	Resistance	Power	Term.	Char.	Resistance	Level 1	Level 2	
Part Number	Value (Ohms)	Rating (W)	Type (^)	(@)	Tolerance (%)	(FRL) (&)	(FRL) (&)	Manufacturer
RN^65@4534%&	4,530,000	1/4	N, R	C, E	B, D, F		P	ANG
RN^65@4594%&	4,590,000	1/4	N, R	C, E	B, D		P	ANG
RN^65@4644%&	4,640,000	1/4	N, R	C, E	B, D, F		P	ANG
RN^65@4704%&	4,700,000	1/4	N, R	C, E	B, D		P	ANG
RN^65@4754%&	4,750,000	1/4	N, R	C, E	B, D, F		P	ANG
RN^65@4814%&	4,810,000	1/4	N, R	C, E	B, D		P	ANG
RN^65@4874%&	4,870,000	1/4	N, R	C, E	B, D, F		P	ANG
RN^65@4934%&	4,930,000	1/4	N, R	C, E	B, D		P	ANG
RN^65@4994%&	4,990,000	1/4	N, R	C, E	B, D, F		P	ANG
	Resistance	Power	Term.	Char.	Resistance	Level 1	Level 2	
Part Number	Value (Ohms)	Rating (W)	Type (^)	(@)	Tolerance (%)	(FRL) (&)	(FRL) (&)	Manufacturer
	Resistance	Power	Term.	Char.	Resistance	Level 1	Level 2	
Part Number	Value (Ohms)	Rating (W)	Type (^)	(@)	Tolerance (%)	(FRL) (&)	(FRL) (&)	Manufacturer

	Resistance	Power	Term.	Char.	Resistance	Level 1	Level 2	
Part Number	Value (Ohms)	Rating (W)	Type (^)	(@)	Tolerance (%)	(FRL) (&)	(FRL) (&)	Manufacturer
	Resistance	Power	Term.	Char.	Resistance	Level 1	Level 2	
Part Number	Value (Ohms)	Rating (W)	Type (^)	(@)	Tolerance (%)	(FRL) (&)	(FRL) (&)	Manufacturer
	Resistance	Power	Term.	Char.	Resistance	Level 1	Level 2	
Part Number	Value (Ohms)	Rating (W)	Type (^)	(@)	Tolerance (%)	(FRL) (&)	(FRL) (&)	Manufacturer
	Resistance	Power	Term.	Char.	Resistance	Level 1	Level 2	
Part Number	Value (Ohms)	Rating (W)	Type (^)	(@)	Tolerance (%)	(FRL) (&)	(FRL) (&)	Manufacturer
	Resistance	Power	Term.	Char.	Resistance	Level 1	Level 2	
Part Number	Value (Ohms)	Rating (W)	Type (^)	(@)	Tolerance (%)	(FRL) (&)	(FRL) (&)	Manufacturer
	Resistance	Power	Term.	Char.	Resistance	Level 1	Level 2	
Part Number	Value (Ohms)	Rating (W)	Type (^)	(@)	Tolerance (%)	(FRL) (&)	(FRL) (&)	Manufacturer
	Resistance	Power	Term.	Char.	Resistance	Level 1	Level 2	
Part Number	Value (Ohms)	Rating (W)	Type (^)	(@)	Tolerance (%)	(FRL) (&)	(FRL) (&)	Manufacturer
	Resistance	Power	Term.	Char.	Resistance	Level 1	Level 2	
Part Number	Value (Ohms)	Rating (W)	Type (^)	(@)	Tolerance (%)	(FRL) (&)	(FRL) (&)	Manufacturer
	Resistance	Power	Term.	Char.	Resistance	Level 1	Level 2	
Part Number	Value (Ohms)	Rating (W)	Type (^)	(@)	Tolerance (%)	(FRL) (&)	(FRL) (&)	Manufacturer
	Resistance	Power	Term.	Char.	Resistance	Level 1	Level 2	
Part Number	Value (Ohms)	Rating (W)	Type (^)	(@)	Tolerance (%)	(FRL) (&)	(FRL) (&)	Manufacturer

RN^70 Film Resistors

	Resistance	Power	Term.	Char.	Resistance	Level 1	Level 2	
Part Number	Value (Ohms)	Rating (W)	Type (^)	(@)	Tolerance (%)	(FRL) (&)	(FRL) (&)	Manufacturer
RN^70@10R0%&	10.0	1/2	C	H, J, K	B, D, F	S	P, R	DAL
RN^70@10R1%&	10.1	1/2	C	H, J, K	B, D	S	P, R	DAL
RN^70@10R2%&	10.2	1/2	C	H, J, K	B, D, F	S	P, R	DAL
RN^70@10R4%&	10.4	1/2	C	H, J, K	B, D	S	P, R	DAL
RN^70@10R5%&	10.5	1/2	C	H, J, K	B, D, F	S	P, R	DAL
RN^70@10R6%&	10.6	1/2	C	H, J, K	B, D	S	P, R	DAL
RN^70@10R7%&	10.7	1/2	C	H, J, K	B, D, F	S	P, R	DAL
RN^70@10R9%&	10.9	1/2	C	H, J, K	B, D	S	P, R	DAL
RN^70@11R0%&	11.0	1/2	C	H, J, K	B, D, F	S	P, R	DAL
RN^70@11R1%&	11.1	1/2	C	H, J, K	B, D	S	P, R	DAL
RN^70@11R3%&	11.3	1/2	C	H, J, K	B, D, F	S	P, R	DAL
RN^70@11R4%&	11.4	1/2	C	H, J, K	B, D	S	P, R	DAL
RN^70@11R5%&	11.5	1/2	C	H, J, K	B, D, F	S	P, R	DAL
RN^70@11R7%&	11.7	1/2	C	H, J, K	B, D	S	P, R	DAL
RN^70@11R8%&	11.8	1/2	C	H, J, K	B, D, F	S	P, R	DAL
RN^70@12R0%&	12.0	1/2	C	H, J, K	B, D	S	P, R	DAL
RN^70@12R1%&	12.1	1/2	C	H, J, K	B, D, F	S	P, R	DAL
RN^70@12R3%&	12.3	1/2	C	H, J, K	B, D	S	P, R	DAL
RN^70@12R4%&	12.4	1/2	C	H, J, K	B, D, F	S	P, R	DAL
RN^70@12R6%&	12.6	1/2	C	H, J, K	B, D	S	P, R	DAL

RN^70@12R7%&	12.7	1/2	C	H, J, K	B, D, F	S	P, R	DAL
RN^70@12R9%&	12.9	1/2	C	H, J, K	B, D	S	P, R	DAL
RN^70@13R0%&	13.0	1/2	C	H, J, K	B, D, F	S	P, R	DAL
RN^70@13R2%&	13.2	1/2	C	H, J, K	B, D	S	P, R	DAL
RN^70@13R3%&	13.3	1/2	C	H, J, K	B, D, F	S	P, R	DAL
RN^70@13R5%&	13.5	1/2	C	H, J, K	B, D	S	P, R	DAL
RN^70@13R7%&	13.7	1/2	C	H, J, K	B, D, F	S	P, R	DAL
RN^70@13R8%&	13.8	1/2	C	H, J, K	B, D	S	P, R	DAL
RN^70@14R0%&	14.0	1/2	C	H, J, K	B, D, F	S	P, R	DAL
RN^70@14R2%&	14.2	1/2	C	H, J, K	B, D	S	P, R	DAL
RN^70@14R3%&	14.3	1/2	C	H, J, K	B, D, F	S	P, R	DAL
RN^70@14R5%&	14.5	1/2	C	H, J, K	B, D	S	P, R	DAL
RN^70@14R7%&	14.7	1/2	C	H, J, K	B, D, F	S	P, R	DAL
RN^70@14R9%&	14.9	1/2	C	H, J, K	B, D	S	P, R	DAL
RN^70@15R0%&	15.0	1/2	C	H, J, K	B, D, F	S	P, R	DAL
RN^70@15R2%&	15.2	1/2	C	H, J, K	B, D	S	P, R	DAL
RN^70@15R4%&	15.4	1/2	C	H, J, K	B, D, F	S	P, R	DAL
RN^70@15R6%&	15.6	1/2	C	H, J, K	B, D	S	P, R	DAL
RN^70@15R8%&	15.8	1/2	C	H, J, K	B, D, F	S	P, R	DAL
RN^70@16R0%&	16.0	1/2	C	H, J, K	B, D	S	P, R	DAL
RN^70@16R2%&	16.2	1/2	C	H, J, K	B, D, F	S	P, R	DAL
RN^70@16R4%&	16.4	1/2	C	H, J, K	B, D	S	P, R	DAL
RN^70@16R5%&	16.5	1/2	C	H, J, K	B, D, F	S	P, R	DAL
RN^70@16R7%&	16.7	1/2	C	H, J, K	B, D	S	P, R	DAL
RN^70@16R9%&	16.9	1/2	C	H, J, K	B, D, F	S	P, R	DAL
RN^70@17R2%&	17.2	1/2	C	H, J, K	B, D	S	P, R	DAL
RN^70@17R4%&	17.4	1/2	C	H, J, K	B, D, F	S	P, R	DAL
RN^70@17R6%&	17.6	1/2	C	H, J, K	B, D	S	P, R	DAL
RN^70@17R8%&	17.8	1/2	C	H, J, K	B, D, F	S	P, R	DAL
RN^70@18R0%&	18.0	1/2	C	H, J, K	B, D	S	P, R	DAL
RN^70@18R2%&	18.2	1/2	C	H, J, K	B, D, F	S	P, R	DAL
RN^70@18R4%&	18.4	1/2	C	H, J, K	B, D	S	P, R	DAL
RN^70@18R7%&	18.7	1/2	C	H, J, K	B, D, F	S	P, R	DAL
RN^70@18R9%&	18.9	1/2	C	H, J, K	B, D	S	P, R	DAL
RN^70@19R1%&	19.1	1/2	C	H, J, K	B, D, F	S	P, R	DAL
RN^70@19R3%&	19.3	1/2	C	H, J, K	B, D	S	P, R	DAL
RN^70@19R6%&	19.6	1/2	C	H, J, K	B, D, F	S	P, R	DAL
RN^70@19R8%&	19.8	1/2	C	H, J, K	B, D	S	P, R	DAL
RN^70@20R0%&	20.0	1/2	C	H, J, K	B, D, F	S	P, R	DAL
RN^70@20R3%&	20.3	1/2	C	H, J, K	B, D	S	P, R	DAL
RN^70@20R5%&	20.5	1/2	C	H, J, K	B, D, F	S	P, R	DAL
RN^70@20R8%&	20.8	1/2	C	H, J, K	B, D	S	P, R	DAL
RN^70@21R0%&	21.0	1/2	C	H, J, K	B, D, F	S	P, R	DAL
RN^70@21R3%&	21.3	1/2	C	H, J, K	B, D	S	P, R	DAL
RN^70@21R5%&	21.5	1/2	C	H, J, K	B, D, F	S	P, R	DAL
RN^70@21R8%&	21.8	1/2	C	H, J, K	B, D	S	P, R	DAL
RN^70@22R1%&	22.1	1/2	C	H, J, K	B, D, F	S	P, R	DAL

RN^70@22R3%&	22.3	1/2	C	H, J, K	B, D	S	P, R	DAL
RN^70@22R6%&	22.6	1/2	C	H, J, K	B, D, F	S	P, R	DAL
RN^70@22R9%&	22.9	1/2	C	H, J, K	B, D	S	P, R	DAL
RN^70@23R2%&	23.2	1/2	C	H, J, K	B, D, F	S	P, R	DAL
RN^70@23R4%&	23.4	1/2	C	H, J, K	B, D	S	P, R	DAL
RN^70@23R7%&	23.7	1/2	C	H, J, K	B, D, F	S	P, R	DAL
RN^70@24R0%&	24.0	1/2	C	H, J, K	B, D	S	P, R	DAL
RN^70@24R3%&	24.3	1/2	C	H, J, K	B, D, F	S	P, R	DAL
RN^70@24R6%&	24.6	1/2	C	H, J, K	B, D	S	P, R	DAL
RN^70@24R9%&	24.9	1/2	C, N, R	H, J, K, C, E	B, D, F	S	P, R	ANG, DAL
RN^70@25R2%&	25.2	1/2	C, N, R	H, J, K, C, E	B, D	S	P, R	ANG, DAL
RN^70@25R5%&	25.5	1/2	C, N, R	H, J, K, C, E	B, D, F	S	P, R	ANG, DAL
RN^70@25R8%&	25.8	1/2	C, N, R	H, J, K, C, E	B, D	S	P, R	ANG, DAL
RN^70@26R1%&	26.1	1/2	C, N, R	H, J, K, C, E	B, D, F	S	P, R	ANG, DAL
RN^70@26R4%&	26.4	1/2	C, N, R	H, J, K, C, E	B, D	S	P, R	ANG, DAL
RN^70@26R7%&	26.7	1/2	C, N, R	H, J, K, C, E	B, D, F	S	P, R	ANG, DAL
RN^70@27R1%&	27.1	1/2	C, N, R	H, J, K, C, E	B, D	S	P, R	ANG, DAL
RN^70@27R4%&	27.4	1/2	C, N, R	H, J, K, C, E	B, D, F	S	P, R	ANG, DAL
RN^70@27R7%&	27.7	1/2	C, N, R	H, J, K, C, E	B, D	S	P, R	ANG, DAL
RN^70@28R0%&	28.0	1/2	C, N, R	H, J, K, C, E	B, D, F	S	P, R	ANG, DAL
RN^70@28R4%&	28.4	1/2	C, N, R	H, J, K, C, E	B, D	S	P, R	ANG, DAL
RN^70@28R7%&	28.7	1/2	C, N, R	H, J, K, C, E	B, D, F	S	P, R	ANG, DAL
RN^70@29R1%&	29.1	1/2	C, N, R	H, J, K, C, E	B, D	S	P, R	ANG, DAL
RN^70@29R4%&	29.4	1/2	C, N, R	H, J, K, C, E	B, D, F	S	P, R	ANG, DAL
RN^70@29R8%&	29.8	1/2	C, N, R	H, J, K, C, E	B, D	S	P, R	ANG, DAL
RN^70@30R1%&	30.1	1/2	C, N, R	H, J, K, C, E	B, D, F	S	P, R	ANG, DAL
RN^70@30R5%&	30.5	1/2	C, N, R	H, J, K, C, E	B, D	S	P, R	ANG, DAL
RN^70@30R9%&	30.9	1/2	C, N, R	H, J, K, C, E	B, D, F	S	P, R	ANG, DAL
RN^70@31R2%&	31.2	1/2	C, N, R	H, J, K, C, E	B, D	S	P, R	ANG, DAL
RN^70@31R6%&	31.6	1/2	C, N, R	H, J, K, C, E	B, D, F	S	P, R	ANG, DAL
RN^70@32R0%&	32.0	1/2	C, N, R	H, J, K, C, E	B, D	S	P, R	ANG, DAL
RN^70@32R4%&	32.4	1/2	C, N, R	H, J, K, C, E	B, D, F	S	P, R	ANG, DAL
RN^70@32R8%&	32.8	1/2	C, N, R	H, J, K, C, E	B, D	S	P, R	ANG, DAL
RN^70@33R2%&	33.2	1/2	C, N, R	H, J, K, C, E	B, D, F	S	P, R	ANG, DAL
RN^70@33R6%&	33.6	1/2	C, N, R	H, J, K, C, E	B, D	S	P, R	ANG, DAL
RN^70@34R0%&	34.0	1/2	C, N, R	H, J, K, C, E	B, D, F	S	P, R	ANG, DAL
RN^70@34R4%&	34.4	1/2	C, N, R	H, J, K, C, E	B, D	S	P, R	ANG, DAL
RN^70@34R8%&	34.8	1/2	C, N, R	H, J, K, C, E	B, D, F	S	P, R	ANG, DAL
RN^70@35R2%&	35.2	1/2	C, N, R	H, J, K, C, E	B, D	S	P, R	ANG, DAL
RN^70@35R7%&	35.7	1/2	C, N, R	H, J, K, C, E	B, D, F	S	P, R	ANG, DAL
RN^70@36R1%&	36.1	1/2	C, N, R	H, J, K, C, E	B, D	S	P, R	ANG, DAL
RN^70@36R5%&	36.5	1/2	C, N, R	H, J, K, C, E	B, D, F	S	P, R	ANG, DAL
RN^70@37R0%&	37.0	1/2	C, N, R	H, J, K, C, E	B, D	S	P, R	ANG, DAL
RN^70@37R4%&	37.4	1/2	C, N, R	H, J, K, C, E	B, D, F	S	P, R	ANG, DAL
RN^70@37R9%&	37.9	1/2	C, N, R	H, J, K, C, E	B, D	S	P, R	ANG, DAL
RN^70@38R3%&	38.3	1/2	C, N, R	H, J, K, C, E	B, D, F	S	P, R	ANG, DAL
RN^70@38R8%&	38.8	1/2	C, N, R	H, J, K, C, E	B, D	S	P, R	ANG, DAL

RN^70@39R2%&	39.2	1/2	C, N, R	H, J, K, C, E	B, D, F	S	P, R	ANG, DAL
RN^70@39R7%&	39.7	1/2	C, N, R	H, J, K, C, E	B, D	S	P, R	ANG, DAL
RN^70@40R2%&	40.2	1/2	C, N, R	H, J, K, C, E	B, D, F	S	P, R	ANG, DAL
RN^70@40R7%&	40.7	1/2	C, N, R	H, J, K, C, E	B, D	S	P, R	ANG, DAL
RN^70@41R2%&	41.2	1/2	C, N, R	H, J, K, C, E	B, D, F	S	P, R	ANG, DAL
RN^70@41R7%&	41.7	1/2	C, N, R	H, J, K, C, E	B, D	S	P, R	ANG, DAL
RN^70@42R2%&	42.2	1/2	C, N, R	H, J, K, C, E	B, D, F	S	P, R	ANG, DAL
RN^70@42R7%&	42.7	1/2	C, N, R	H, J, K, C, E	B, D	S	P, R	ANG, DAL
RN^70@43R2%&	43.2	1/2	C, N, R	H, J, K, C, E	B, D, F	S	P, R	ANG, DAL
RN^70@43R7%&	43.7	1/2	C, N, R	H, J, K, C, E	B, D	S	P, R	ANG, DAL
RN^70@44R2%&	44.2	1/2	C, N, R	H, J, K, C, E	B, D, F	S	P, R	ANG, DAL
RN^70@44R8%&	44.8	1/2	C, N, R	H, J, K, C, E	B, D	S	P, R	ANG, DAL
RN^70@45R3%&	45.3	1/2	C, N, R	H, J, K, C, E	B, D, F	S	P, R	ANG, DAL
RN^70@45R9%&	45.9	1/2	C, N, R	H, J, K, C, E	B, D	S	P, R	ANG, DAL
RN^70@46R4%&	46.4	1/2	C, N, R	H, J, K, C, E	B, D, F	S	P, R	ANG, DAL
RN^70@47R0%&	47.0	1/2	C, N, R	H, J, K, C, E	B, D	S	P, R	ANG, DAL
RN^70@47R5%&	47.5	1/2	C, N, R	H, J, K, C, E	B, D, F	S	P, R	ANG, DAL
RN^70@48R1%&	48.1	1/2	C, N, R	H, J, K, C, E	B, D	S	P, R	ANG, DAL
RN^70@48R7%&	48.7	1/2	C, N, R	H, J, K, C, E	B, D, F	S	P, R	ANG, DAL
RN^70@49R3%&	49.3	1/2	C, N, R	H, J, K, C, E	B, D	S	P, R	ANG, DAL
RN^70@49R9%&	49.9	1/2	C, N, R	H, J, K, C, E	B, D, F	S	P, R	ANG, DAL
RN^70@50R5%&	50.5	1/2	C, N, R	H, J, K, C, E	B, D	S	P, R	ANG, DAL
RN^70@51R1%&	51.1	1/2	C, N, R	H, J, K, C, E	B, D, F	S	P, R	ANG, DAL
RN^70@51R7%&	51.7	1/2	C, N, R	H, J, K, C, E	B, D	S	P, R	ANG, DAL
RN^70@52R3%&	52.3	1/2	C, N, R	H, J, K, C, E	B, D, F	S	P, R	ANG, DAL
RN^70@53R0%&	53.0	1/2	C, N, R	H, J, K, C, E	B, D	S	P, R	ANG, DAL
RN^70@53R6%&	53.6	1/2	C, N, R	H, J, K, C, E	B, D, F	S	P, R	ANG, DAL
RN^70@54R2%&	54.2	1/2	C, N, R	H, J, K, C, E	B, D	S	P, R	ANG, DAL
RN^70@54R9%&	54.9	1/2	C, N, R	H, J, K, C, E	B, D, F	S	P, R	ANG, DAL
RN^70@55R6%&	55.6	1/2	C, N, R	H, J, K, C, E	B, D	S	P, R	ANG, DAL
RN^70@56R2%&	56.2	1/2	C, N, R	H, J, K, C, E	B, D, F	S	P, R	ANG, DAL
RN^70@56R9%&	56.9	1/2	C, N, R	H, J, K, C, E	B, D	S	P, R	ANG, DAL
RN^70@57R6%&	57.6	1/2	C, N, R	H, J, K, C, E	B, D, F	S	P, R	ANG, DAL
RN^70@58R3%&	58.3	1/2	C, N, R	H, J, K, C, E	B, D	S	P, R	ANG, DAL
RN^70@59R0%&	59.0	1/2	C, N, R	H, J, K, C, E	B, D, F	S	P, R	ANG, DAL
RN^70@59R7%&	59.7	1/2	C, N, R	H, J, K, C, E	B, D	S	P, R	ANG, DAL
RN^70@60R4%&	60.4	1/2	C, N, R	H, J, K, C, E	B, D, F	S	P, R	ANG, DAL
RN^70@61R2%&	61.2	1/2	C, N, R	H, J, K, C, E	B, D	S	P, R	ANG, DAL
RN^70@61R9%&	61.9	1/2	C, N, R	H, J, K, C, E	B, D, F	S	P, R	ANG, DAL
RN^70@62R6%&	62.6	1/2	C, N, R	H, J, K, C, E	B, D	S	P, R	ANG, DAL
RN^70@63R4%&	63.4	1/2	C, N, R	H, J, K, C, E	B, D, F	S	P, R	ANG, DAL
RN^70@64R2%&	64.2	1/2	C, N, R	H, J, K, C, E	B, D	S	P, R	ANG, DAL
RN^70@64R9%&	64.9	1/2	C, N, R	H, J, K, C, E	B, D, F	S	P, R	ANG, DAL
RN^70@65R7%&	65.7	1/2	C, N, R	H, J, K, C, E	B, D	S	P, R	ANG, DAL
RN^70@66R5%&	66.5	1/2	C, N, R	H, J, K, C, E	B, D, F	S	P, R	ANG, DAL
RN^70@67R3%&	67.3	1/2	C, N, R	H, J, K, C, E	B, D	S	P, R	ANG, DAL
RN^70@68R1%&	68.1	1/2	C, N, R	H, J, K, C, E	B, D, F	S	P, R	ANG, DAL

RN^70@69R0%&	69.0	1/2	C, N, R	H, J, K, C, E	B, D	S	P, R	ANG, DAL
RN^70@69R8%&	69.8	1/2	C, N, R	H, J, K, C, E	B, D, F	S	P, R	ANG, DAL
RN^70@70R6%&	70.6	1/2	C, N, R	H, J, K, C, E	B, D	S	P, R	ANG, DAL
RN^70@71R5%&	71.5	1/2	C, N, R	H, J, K, C, E	B, D, F	S	P, R	ANG, DAL
RN^70@72R3%&	72.3	1/2	C, N, R	H, J, K, C, E	B, D	S	P, R	ANG, DAL
RN^70@73R2%&	73.2	1/2	C, N, R	H, J, K, C, E	B, D, F	S	P, R	ANG, DAL
RN^70@74R1%&	74.1	1/2	C, N, R	H, J, K, C, E	B, D	S	P, R	ANG, DAL
RN^70@75R0%&	75.0	1/2	C, N, R	H, J, K, C, E	B, D, F	S	P, R	ANG, DAL
RN^70@75R9%&	75.9	1/2	C, N, R	H, J, K, C, E	B, D	S	P, R	ANG, DAL
RN^70@76R8%&	76.8	1/2	C, N, R	H, J, K, C, E	B, D, F	S	P, R	ANG, DAL
RN^70@77R7%&	77.7	1/2	C, N, R	H, J, K, C, E	B, D	S	P, R	ANG, DAL
RN^70@78R7%&	78.7	1/2	C, N, R	H, J, K, C, E	B, D, F	S	P, R	ANG, DAL
RN^70@79R6%&	79.6	1/2	C, N, R	H, J, K, C, E	B, D	S	P, R	ANG, DAL
RN^70@80R6%&	80.6	1/2	C, N, R	H, J, K, C, E	B, D, F	S	P, R	ANG, DAL
RN^70@81R6%&	81.6	1/2	C, N, R	H, J, K, C, E	B, D	S	P, R	ANG, DAL
RN^70@82R5%&	82.5	1/2	C, N, R	H, J, K, C, E	B, D, F	S	P, R	ANG, DAL
RN^70@83R5%&	83.5	1/2	C, N, R	H, J, K, C, E	B, D	S	P, R	ANG, DAL
RN^70@84R5%&	84.5	1/2	C, N, R	H, J, K, C, E	B, D, F	S	P, R	ANG, DAL
RN^70@85R6%&	85.6	1/2	C, N, R	H, J, K, C, E	B, D	S	P, R	ANG, DAL
RN^70@86R6%&	86.6	1/2	C, N, R	H, J, K, C, E	B, D, F	S	P, R	ANG, DAL
RN^70@87R6%&	87.6	1/2	C, N, R	H, J, K, C, E	B, D	S	P, R	ANG, DAL
RN^70@88R7%&	88.7	1/2	C, N, R	H, J, K, C, E	B, D, F	S	P, R	ANG, DAL
RN^70@89R8%&	89.8	1/2	C, N, R	H, J, K, C, E	B, D	S	P, R	ANG, DAL
RN^70@90R9%&	90.9	1/2	C, N, R	H, J, K, C, E	B, D, F	S	P, R	ANG, DAL
RN^70@92R0%&	92.0	1/2	C, N, R	H, J, K, C, E	B, D	S	P, R	ANG, DAL
RN^70@93R1%&	93.1	1/2	C, N, R	H, J, K, C, E	B, D, F	S	P, R	ANG, DAL
RN^70@94R2%&	94.2	1/2	C, N, R	H, J, K, C, E	B, D	S	P, R	ANG, DAL
RN^70@95R3%&	95.3	1/2	C, N, R	H, J, K, C, E	B, D, F	S	P, R	ANG, DAL
RN^70@96R5%&	96.5	1/2	C, N, R	H, J, K, C, E	B, D	S	P, R	ANG, DAL
RN^70@97R6%&	97.6	1/2	C, N, R	H, J, K, C, E	B, D, F	S	P, R	ANG, DAL
RN^70@98R8%&	98.8	1/2	C, N, R	H, J, K, C, E	B, D	S	P, R	ANG, DAL
RN^70@1000%&	100	1/2	C, N, R	H, J, K, C, E	B, D, F	S	P, R	ANG, DAL
RN^70@1010%&	101	1/2	C, N, R	H, J, K, C, E	B, D	S	P, R	ANG, DAL
RN^70@1020%&	102	1/2	C, N, R	H, J, K, C, E	B, D, F	S	P, R	ANG, DAL
RN^70@1040%&	104	1/2	C, N, R	H, J, K, C, E	B, D	S	P, R	ANG, DAL
RN^70@1050%&	105	1/2	C, N, R	H, J, K, C, E	B, D, F	S	P, R	ANG, DAL
RN^70@1060%&	106	1/2	C, N, R	H, J, K, C, E	B, D	S	P, R	ANG, DAL
RN^70@1070%&	107	1/2	C, N, R	H, J, K, C, E	B, D, F	S	P, R	ANG, DAL
RN^70@1090%&	109	1/2	C, N, R	H, J, K, C, E	B, D	S	P, R	ANG, DAL
RN^70@1100%&	110	1/2	C, N, R	H, J, K, C, E	B, D, F	S	P, R	ANG, DAL
RN^70@1110%&	111	1/2	C, N, R	H, J, K, C, E	B, D	S	P, R	ANG, DAL
RN^70@1130%&	113	1/2	C, N, R	H, J, K, C, E	B, D, F	S	P, R	ANG, DAL
RN^70@1140%&	114	1/2	C, N, R	H, J, K, C, E	B, D	S	P, R	ANG, DAL
RN^70@1150%&	115	1/2	C, N, R	H, J, K, C, E	B, D, F	S	P, R	ANG, DAL
RN^70@1170%&	117	1/2	C, N, R	H, J, K, C, E	B, D	S	P, R	ANG, DAL
RN^70@1180%&	118	1/2	C, N, R	H, J, K, C, E	B, D, F	S	P, R	ANG, DAL
RN^70@1200%&	120	1/2	C, N, R	H, J, K, C, E	B, D	S	P, R	ANG, DAL

RN^70@1210%&	121	1/2	C, N, R	H, J, K, C, E	B, D, F	S	P, R	ANG, DAL
RN^70@1230%&	123	1/2	C, N, R	H, J, K, C, E	B, D	S	P, R	ANG, DAL
RN^70@1240%&	124	1/2	C, N, R	H, J, K, C, E	B, D, F	S	P, R	ANG, DAL
RN^70@1260%&	126	1/2	C, N, R	H, J, K, C, E	B, D	S	P, R	ANG, DAL
RN^70@1270%&	127	1/2	C, N, R	H, J, K, C, E	B, D, F	S	P, R	ANG, DAL
RN^70@1290%&	129	1/2	C, N, R	H, J, K, C, E	B, D	S	P, R	ANG, DAL
RN^70@1300%&	130	1/2	C, N, R	H, J, K, C, E	B, D, F	S	P, R	ANG, DAL
RN^70@1320%&	132	1/2	C, N, R	H, J, K, C, E	B, D	S	P, R	ANG, DAL
RN^70@1330%&	133	1/2	C, N, R	H, J, K, C, E	B, D, F	S	P, R	ANG, DAL
RN^70@1350%&	135	1/2	C, N, R	H, J, K, C, E	B, D	S	P, R	ANG, DAL
RN^70@1370%&	137	1/2	C, N, R	H, J, K, C, E	B, D, F	S	P, R	ANG, DAL
RN^70@1380%&	138	1/2	C, N, R	H, J, K, C, E	B, D	S	P, R	ANG, DAL
RN^70@1400%&	140	1/2	C, N, R	H, J, K, C, E	B, D, F	S	P, R	ANG, DAL
RN^70@1420%&	142	1/2	C, N, R	H, J, K, C, E	B, D	S	P, R	ANG, DAL
RN^70@1430%&	143	1/2	C, N, R	H, J, K, C, E	B, D, F	S	P, R	ANG, DAL
RN^70@1450%&	145	1/2	C, N, R	H, J, K, C, E	B, D	S	P, R	ANG, DAL
RN^70@1470%&	147	1/2	C, N, R	H, J, K, C, E	B, D, F	S	P, R	ANG, DAL
RN^70@1490%&	149	1/2	C, N, R	H, J, K, C, E	B, D	S	P, R	ANG, DAL
RN^70@1500%&	150	1/2	C, N, R	H, J, K, C, E	B, D, F	S	P, R	ANG, DAL
RN^70@1520%&	152	1/2	C, N, R	H, J, K, C, E	B, D	S	P, R	ANG, DAL
RN^70@1540%&	154	1/2	C, N, R	H, J, K, C, E	B, D, F	S	P, R	ANG, DAL
RN^70@1560%&	156	1/2	C, N, R	H, J, K, C, E	B, D	S	P, R	ANG, DAL
RN^70@1580%&	158	1/2	C, N, R	H, J, K, C, E	B, D, F	S	P, R	ANG, DAL
RN^70@1600%&	160	1/2	C, N, R	H, J, K, C, E	B, D	S	P, R	ANG, DAL
RN^70@1620%&	162	1/2	C, N, R	H, J, K, C, E	B, D, F	S	P, R	ANG, DAL
RN^70@1640%&	164	1/2	C, N, R	H, J, K, C, E	B, D	S	P, R	ANG, DAL
RN^70@1650%&	165	1/2	C, N, R	H, J, K, C, E	B, D, F	S	P, R	ANG, DAL
RN^70@1670%&	167	1/2	C, N, R	H, J, K, C, E	B, D	S	P, R	ANG, DAL
RN^70@1690%&	169	1/2	C, N, R	H, J, K, C, E	B, D, F	S	P, R	ANG, DAL
RN^70@1720%&	172	1/2	C, N, R	H, J, K, C, E	B, D	S	P, R	ANG, DAL
RN^70@1740%&	174	1/2	C, N, R	H, J, K, C, E	B, D, F	S	P, R	ANG, DAL
RN^70@1760%&	176	1/2	C, N, R	H, J, K, C, E	B, D	S	P, R	ANG, DAL
RN^70@1780%&	178	1/2	C, N, R	H, J, K, C, E	B, D, F	S	P, R	ANG, DAL
RN^70@1800%&	180	1/2	C, N, R	H, J, K, C, E	B, D	S	P, R	ANG, DAL
RN^70@1820%&	182	1/2	C, N, R	H, J, K, C, E	B, D, F	S	P, R	ANG, DAL
RN^70@1840%&	184	1/2	C, N, R	H, J, K, C, E	B, D	S	P, R	ANG, DAL
RN^70@1870%&	187	1/2	C, N, R	H, J, K, C, E	B, D, F	S	P, R	ANG, DAL
RN^70@1890%&	189	1/2	C, N, R	H, J, K, C, E	B, D	S	P, R	ANG, DAL
RN^70@1910%&	191	1/2	C, N, R	H, J, K, C, E	B, D, F	S	P, R	ANG, DAL
RN^70@1930%&	193	1/2	C, N, R	H, J, K, C, E	B, D	S	P, R	ANG, DAL
RN^70@1960%&	196	1/2	C, N, R	H, J, K, C, E	B, D, F	S	P, R	ANG, DAL
RN^70@1980%&	198	1/2	C, N, R	H, J, K, C, E	B, D	S	P, R	ANG, DAL
RN^70@2000%&	200	1/2	C, N, R	H, J, K, C, E	B, D, F	S	P, R	ANG, DAL
RN^70@2030%&	203	1/2	C, N, R	H, J, K, C, E	B, D	S	P, R	ANG, DAL
RN^70@2050%&	205	1/2	C, N, R	H, J, K, C, E	B, D, F	S	P, R	ANG, DAL
RN^70@2080%&	208	1/2	C, N, R	H, J, K, C, E	B, D	S	P, R	ANG, DAL
RN^70@2100%&	210	1/2	C, N, R	H, J, K, C, E	B, D, F	S	P, R	ANG, DAL

RN^70@2130%&	213	1/2	C, N, R	H, J, K, C, E	B, D	S	P, R	ANG, DAL
RN^70@2150%&	215	1/2	C, N, R	H, J, K, C, E	B, D, F	S	P, R	ANG, DAL
RN^70@2180%&	218	1/2	C, N, R	H, J, K, C, E	B, D	S	P, R	ANG, DAL
RN^70@2210%&	221	1/2	C, N, R	H, J, K, C, E	B, D, F	S	P, R	ANG, DAL
RN^70@2230%&	223	1/2	C, N, R	H, J, K, C, E	B, D	S	P, R	ANG, DAL
RN^70@2260%&	226	1/2	C, N, R	H, J, K, C, E	B, D, F	S	P, R	ANG, DAL
RN^70@2290%&	229	1/2	C, N, R	H, J, K, C, E	B, D	S	P, R	ANG, DAL
RN^70@2320%&	232	1/2	C, N, R	H, J, K, C, E	B, D, F	S	P, R	ANG, DAL
RN^70@2340%&	234	1/2	C, N, R	H, J, K, C, E	B, D	S	P, R	ANG, DAL
RN^70@2370%&	237	1/2	C, N, R	H, J, K, C, E	B, D, F	S	P, R	ANG, DAL
RN^70@2400%&	240	1/2	C, N, R	H, J, K, C, E	B, D	S	P, R	ANG, DAL
RN^70@2430%&	243	1/2	C, N, R	H, J, K, C, E	B, D, F	S	P, R	ANG, DAL
RN^70@2460%&	246	1/2	C, N, R	H, J, K, C, E	B, D	S	P, R	ANG, DAL
RN^70@2490%&	249	1/2	C, N, R	H, J, K, C, E	B, D, F	S	P, R	ANG, DAL
RN^70@2520%&	252	1/2	C, N, R	H, J, K, C, E	B, D	S	P, R	ANG, DAL
RN^70@2550%&	255	1/2	C, N, R	H, J, K, C, E	B, D, F	S	P, R	ANG, DAL
RN^70@2580%&	258	1/2	C, N, R	H, J, K, C, E	B, D	S	P, R	ANG, DAL
RN^70@2610%&	261	1/2	C, N, R	H, J, K, C, E	B, D, F	S	P, R	ANG, DAL
RN^70@2640%&	264	1/2	C, N, R	H, J, K, C, E	B, D	S	P, R	ANG, DAL
RN^70@2670%&	267	1/2	C, N, R	H, J, K, C, E	B, D, F	S	P, R	ANG, DAL
RN^70@2710%&	271	1/2	C, N, R	H, J, K, C, E	B, D	S	P, R	ANG, DAL
RN^70@2740%&	274	1/2	C, N, R	H, J, K, C, E	B, D, F	S	P, R	ANG, DAL
RN^70@2770%&	277	1/2	C, N, R	H, J, K, C, E	B, D	S	P, R	ANG, DAL
RN^70@2800%&	280	1/2	C, N, R	H, J, K, C, E	B, D, F	S	P, R	ANG, DAL
RN^70@2840%&	284	1/2	C, N, R	H, J, K, C, E	B, D	S	P, R	ANG, DAL
RN^70@2870%&	287	1/2	C, N, R	H, J, K, C, E	B, D, F	S	P, R	ANG, DAL
RN^70@2910%&	291	1/2	C, N, R	H, J, K, C, E	B, D	S	P, R	ANG, DAL
RN^70@2940%&	294	1/2	C, N, R	H, J, K, C, E	B, D, F	S	P, R	ANG, DAL
RN^70@2980%&	298	1/2	C, N, R	H, J, K, C, E	B, D	S	P, R	ANG, DAL
RN^70@3010%&	301	1/2	C, N, R	H, J, K, C, E	B, D, F	S	P, R	ANG, DAL
RN^70@3050%&	305	1/2	C, N, R	H, J, K, C, E	B, D	S	P, R	ANG, DAL
RN^70@3090%&	309	1/2	C, N, R	H, J, K, C, E	B, D, F	S	P, R	ANG, DAL
RN^70@3120%&	312	1/2	C, N, R	H, J, K, C, E	B, D	S	P, R	ANG, DAL
RN^70@3160%&	316	1/2	C, N, R	H, J, K, C, E	B, D, F	S	P, R	ANG, DAL
RN^70@3200%&	320	1/2	C, N, R	H, J, K, C, E	B, D	S	P, R	ANG, DAL
RN^70@3240%&	324	1/2	C, N, R	H, J, K, C, E	B, D, F	S	P, R	ANG, DAL
RN^70@3280%&	328	1/2	C, N, R	H, J, K, C, E	B, D	S	P, R	ANG, DAL
RN^70@3320%&	332	1/2	C, N, R	H, J, K, C, E	B, D, F	S	P, R	ANG, DAL
RN^70@3360%&	336	1/2	C, N, R	H, J, K, C, E	B, D	S	P, R	ANG, DAL
RN^70@3400%&	340	1/2	C, N, R	H, J, K, C, E	B, D, F	S	P, R	ANG, DAL
RN^70@3440%&	344	1/2	C, N, R	H, J, K, C, E	B, D	S	P, R	ANG, DAL
RN^70@3480%&	348	1/2	C, N, R	H, J, K, C, E	B, D, F	S	P, R	ANG, DAL
RN^70@3520%&	352	1/2	C, N, R	H, J, K, C, E	B, D	S	P, R	ANG, DAL
RN^70@3570%&	357	1/2	C, N, R	H, J, K, C, E	B, D, F	S	P, R	ANG, DAL
RN^70@3610%&	361	1/2	C, N, R	H, J, K, C, E	B, D	S	P, R	ANG, DAL
RN^70@3650%&	365	1/2	C, N, R	H, J, K, C, E	B, D, F	S	P, R	ANG, DAL
RN^70@3700%&	370	1/2	C, N, R	H, J, K, C, E	B, D	S	P, R	ANG, DAL

RN^70@3740%&	374	1/2	C, N, R	H, J, K, C, E	B, D, F	S	P, R	ANG, DAL
RN^70@3790%&	379	1/2	C, N, R	H, J, K, C, E	B, D	S	P, R	ANG, DAL
RN^70@3830%&	383	1/2	C, N, R	H, J, K, C, E	B, D, F	S	P, R	ANG, DAL
RN^70@3880%&	388	1/2	C, N, R	H, J, K, C, E	B, D	S	P, R	ANG, DAL
RN^70@3920%&	392	1/2	C, N, R	H, J, K, C, E	B, D, F	S	P, R	ANG, DAL
RN^70@3970%&	397	1/2	C, N, R	H, J, K, C, E	B, D	S	P, R	ANG, DAL
RN^70@4020%&	402	1/2	C, N, R	H, J, K, C, E	B, D, F	S	P, R	ANG, DAL
RN^70@4070%&	407	1/2	C, N, R	H, J, K, C, E	B, D	S	P, R	ANG, DAL
RN^70@4120%&	412	1/2	C, N, R	H, J, K, C, E	B, D, F	S	P, R	ANG, DAL
RN^70@4170%&	417	1/2	C, N, R	H, J, K, C, E	B, D	S	P, R	ANG, DAL
RN^70@4220%&	422	1/2	C, N, R	H, J, K, C, E	B, D, F	S	P, R	ANG, DAL
RN^70@4270%&	427	1/2	C, N, R	H, J, K, C, E	B, D	S	P, R	ANG, DAL
RN^70@4320%&	432	1/2	C, N, R	H, J, K, C, E	B, D, F	S	P, R	ANG, DAL
RN^70@4370%&	437	1/2	C, N, R	H, J, K, C, E	B, D	S	P, R	ANG, DAL
RN^70@4420%&	442	1/2	C, N, R	H, J, K, C, E	B, D, F	S	P, R	ANG, DAL
RN^70@4480%&	448	1/2	C, N, R	H, J, K, C, E	B, D	S	P, R	ANG, DAL
RN^70@4530%&	453	1/2	C, N, R	H, J, K, C, E	B, D, F	S	P, R	ANG, DAL
RN^70@4590%&	459	1/2	C, N, R	H, J, K, C, E	B, D	S	P, R	ANG, DAL
RN^70@4640%&	464	1/2	C, N, R	H, J, K, C, E	B, D, F	S	P, R	ANG, DAL
RN^70@4700%&	470	1/2	C, N, R	H, J, K, C, E	B, D	S	P, R	ANG, DAL
RN^70@4750%&	475	1/2	C, N, R	H, J, K, C, E	B, D, F	S	P, R	ANG, DAL
RN^70@4810%&	481	1/2	C, N, R	H, J, K, C, E	B, D	S	P, R	ANG, DAL
RN^70@4870%&	487	1/2	C, N, R	H, J, K, C, E	B, D, F	S	P, R	ANG, DAL
RN^70@4930%&	493	1/2	C, N, R	H, J, K, C, E	B, D	S	P, R	ANG, DAL
RN^70@4990%&	499	1/2	C, N, R	H, J, K, C, E	B, D, F	S	P, R	ANG, DAL
RN^70@5050%&	505	1/2	C, N, R	H, J, K, C, E	B, D	S	P, R	ANG, DAL
RN^70@5110%&	511	1/2	C, N, R	H, J, K, C, E	B, D, F	S	P, R	ANG, DAL
RN^70@5170%&	517	1/2	C, N, R	H, J, K, C, E	B, D	S	P, R	ANG, DAL
RN^70@5230%&	523	1/2	C, N, R	H, J, K, C, E	B, D, F	S	P, R	ANG, DAL
RN^70@5300%&	530	1/2	C, N, R	H, J, K, C, E	B, D	S	P, R	ANG, DAL
RN^70@5360%&	536	1/2	C, N, R	H, J, K, C, E	B, D, F	S	P, R	ANG, DAL
RN^70@5420%&	542	1/2	C, N, R	H, J, K, C, E	B, D	S	P, R	ANG, DAL
RN^70@5490%&	549	1/2	C, N, R	H, J, K, C, E	B, D, F	S	P, R	ANG, DAL
RN^70@5560%&	556	1/2	C, N, R	H, J, K, C, E	B, D	S	P, R	ANG, DAL
RN^70@5620%&	562	1/2	C, N, R	H, J, K, C, E	B, D, F	S	P, R	ANG, DAL
RN^70@5690%&	569	1/2	C, N, R	H, J, K, C, E	B, D	S	P, R	ANG, DAL
RN^70@5760%&	576	1/2	C, N, R	H, J, K, C, E	B, D, F	S	P, R	ANG, DAL
RN^70@5830%&	583	1/2	C, N, R	H, J, K, C, E	B, D	S	P, R	ANG, DAL
RN^70@5900%&	590	1/2	C, N, R	H, J, K, C, E	B, D, F	S	P, R	ANG, DAL
RN^70@5970%&	597	1/2	C, N, R	H, J, K, C, E	B, D	S	P, R	ANG, DAL
RN^70@6040%&	604	1/2	C, N, R	H, J, K, C, E	B, D, F	S	P, R	ANG, DAL
RN^70@6120%&	612	1/2	C, N, R	H, J, K, C, E	B, D	S	P, R	ANG, DAL
RN^70@6190%&	619	1/2	C, N, R	H, J, K, C, E	B, D, F	S	P, R	ANG, DAL
RN^70@6260%&	626	1/2	C, N, R	H, J, K, C, E	B, D	S	P, R	ANG, DAL
RN^70@6340%&	634	1/2	C, N, R	H, J, K, C, E	B, D, F	S	P, R	ANG, DAL
RN^70@6420%&	642	1/2	C, N, R	H, J, K, C, E	B, D	S	P, R	ANG, DAL
RN^70@6490%&	649	1/2	C, N, R	H, J, K, C, E	B, D, F	S	P, R	ANG, DAL

RN^70@6570%&	657	1/2	C, N, R	H, J, K, C, E	B, D	S	P, R	ANG, DAL
RN^70@6650%&	665	1/2	C, N, R	H, J, K, C, E	B, D, F	S	P, R	ANG, DAL
RN^70@6730%&	673	1/2	C, N, R	H, J, K, C, E	B, D	S	P, R	ANG, DAL
RN^70@6810%&	681	1/2	C, N, R	H, J, K, C, E	B, D, F	S	P, R	ANG, DAL
RN^70@6900%&	690	1/2	C, N, R	H, J, K, C, E	B, D	S	P, R	ANG, DAL
RN^70@6980%&	698	1/2	C, N, R	H, J, K, C, E	B, D, F	S	P, R	ANG, DAL
RN^70@7060%&	706	1/2	C, N, R	H, J, K, C, E	B, D	S	P, R	ANG, DAL
RN^70@7150%&	715	1/2	C, N, R	H, J, K, C, E	B, D, F	S	P, R	ANG, DAL
RN^70@7230%&	723	1/2	C, N, R	H, J, K, C, E	B, D	S	P, R	ANG, DAL
RN^70@7320%&	732	1/2	C, N, R	H, J, K, C, E	B, D, F	S	P, R	ANG, DAL
RN^70@7410%&	741	1/2	C, N, R	H, J, K, C, E	B, D	S	P, R	ANG, DAL
RN^70@7500%&	750	1/2	C, N, R	H, J, K, C, E	B, D, F	S	P, R	ANG, DAL
RN^70@7590%&	759	1/2	C, N, R	H, J, K, C, E	B, D	S	P, R	ANG, DAL
RN^70@7680%&	768	1/2	C, N, R	H, J, K, C, E	B, D, F	S	P, R	ANG, DAL
RN^70@7770%&	777	1/2	C, N, R	H, J, K, C, E	B, D	S	P, R	ANG, DAL
RN^70@7870%&	787	1/2	C, N, R	H, J, K, C, E	B, D, F	S	P, R	ANG, DAL
RN^70@7960%&	796	1/2	C, N, R	H, J, K, C, E	B, D	S	P, R	ANG, DAL
RN^70@8060%&	806	1/2	C, N, R	H, J, K, C, E	B, D, F	S	P, R	ANG, DAL
RN^70@8160%&	816	1/2	C, N, R	H, J, K, C, E	B, D	S	P, R	ANG, DAL
RN^70@8250%&	825	1/2	C, N, R	H, J, K, C, E	B, D, F	S	P, R	ANG, DAL
RN^70@8350%&	835	1/2	C, N, R	H, J, K, C, E	B, D	S	P, R	ANG, DAL
RN^70@8450%&	845	1/2	C, N, R	H, J, K, C, E	B, D, F	S	P, R	ANG, DAL
RN^70@8560%&	856	1/2	C, N, R	H, J, K, C, E	B, D	S	P, R	ANG, DAL
RN^70@8660%&	866	1/2	C, N, R	H, J, K, C, E	B, D, F	S	P, R	ANG, DAL
RN^70@8760%&	876	1/2	C, N, R	H, J, K, C, E	B, D	S	P, R	ANG, DAL
RN^70@8870%&	887	1/2	C, N, R	H, J, K, C, E	B, D, F	S	P, R	ANG, DAL
RN^70@8980%&	898	1/2	C, N, R	H, J, K, C, E	B, D	S	P, R	ANG, DAL
RN^70@9090%&	909	1/2	C, N, R	H, J, K, C, E	B, D, F	S	P, R	ANG, DAL
RN^70@9200%&	920	1/2	C, N, R	H, J, K, C, E	B, D	S	P, R	ANG, DAL
RN^70@9310%&	931	1/2	C, N, R	H, J, K, C, E	B, D, F	S	P, R	ANG, DAL
RN^70@9420%&	942	1/2	C, N, R	H, J, K, C, E	B, D	S	P, R	ANG, DAL
RN^70@9530%&	953	1/2	C, N, R	H, J, K, C, E	B, D, F	S	P, R	ANG, DAL
RN^70@9650%&	965	1/2	C, N, R	H, J, K, C, E	B, D	S	P, R	ANG, DAL
RN^70@9760%&	976	1/2	C, N, R	H, J, K, C, E	B, D, F	S	P, R	ANG, DAL
RN^70@9880%&	988	1/2	C, N, R	H, J, K, C, E	B, D	S	P, R	ANG, DAL
RN^70@1001%&	1,000	1/2	C, N, R	H, J, K, C, E	B, D, F	S	P, R	ANG, DAL
RN^70@1011%&	1,010	1/2	C, N, R	H, J, K, C, E	B, D	S	P, R	ANG, DAL
RN^70@1021%&	1,020	1/2	C, N, R	H, J, K, C, E	B, D, F	S	P, R	ANG, DAL
RN^70@1041%&	1,040	1/2	C, N, R	H, J, K, C, E	B, D	S	P, R	ANG, DAL
RN^70@1051%&	1,050	1/2	C, N, R	H, J, K, C, E	B, D, F	S	P, R	ANG, DAL
RN^70@1061%&	1,060	1/2	C, N, R	H, J, K, C, E	B, D	S	P, R	ANG, DAL
RN^70@1071%&	1,070	1/2	C, N, R	H, J, K, C, E	B, D, F	S	P, R	ANG, DAL
RN^70@1091%&	1,090	1/2	C, N, R	H, J, K, C, E	B, D	S	P, R	ANG, DAL
RN^70@1101%&	1,100	1/2	C, N, R	H, J, K, C, E	B, D, F	S	P, R	ANG, DAL
RN^70@1111%&	1,110	1/2	C, N, R	H, J, K, C, E	B, D	S	P, R	ANG, DAL
RN^70@1131%&	1,130	1/2	C, N, R	H, J, K, C, E	B, D, F	S	P, R	ANG, DAL
RN^70@1141%&	1,140	1/2	C, N, R	H, J, K, C, E	B, D	S	P, R	ANG, DAL

RN^70@1151%&	1,150	1/2	C, N, R	H, J, K, C, E	B, D, F	S	P, R	ANG, DAL
RN^70@1171%&	1,170	1/2	C, N, R	H, J, K, C, E	B, D	S	P, R	ANG, DAL
RN^70@1181%&	1,180	1/2	C, N, R	H, J, K, C, E	B, D, F	S	P, R	ANG, DAL
RN^70@1201%&	1,200	1/2	C, N, R	H, J, K, C, E	B, D	S	P, R	ANG, DAL
RN^70@1211%&	1,210	1/2	C, N, R	H, J, K, C, E	B, D, F	S	P, R	ANG, DAL
RN^70@1231%&	1,230	1/2	C, N, R	H, J, K, C, E	B, D	S	P, R	ANG, DAL
RN^70@1241%&	1,240	1/2	C, N, R	H, J, K, C, E	B, D, F	S	P, R	ANG, DAL
RN^70@1261%&	1,260	1/2	C, N, R	H, J, K, C, E	B, D	S	P, R	ANG, DAL
RN^70@1271%&	1,270	1/2	C, N, R	H, J, K, C, E	B, D, F	S	P, R	ANG, DAL
RN^70@1291%&	1,290	1/2	C, N, R	H, J, K, C, E	B, D	S	P, R	ANG, DAL
RN^70@1301%&	1,300	1/2	C, N, R	H, J, K, C, E	B, D, F	S	P, R	ANG, DAL
RN^70@1321%&	1,320	1/2	C, N, R	H, J, K, C, E	B, D	S	P, R	ANG, DAL
RN^70@1331%&	1,330	1/2	C, N, R	H, J, K, C, E	B, D, F	S	P, R	ANG, DAL
RN^70@1351%&	1,350	1/2	C, N, R	H, J, K, C, E	B, D	S	P, R	ANG, DAL
RN^70@1371%&	1,370	1/2	C, N, R	H, J, K, C, E	B, D, F	S	P, R	ANG, DAL
RN^70@1381%&	1,380	1/2	C, N, R	H, J, K, C, E	B, D	S	P, R	ANG, DAL
RN^70@1401%&	1,400	1/2	C, N, R	H, J, K, C, E	B, D, F	S	P, R	ANG, DAL
RN^70@1421%&	1,420	1/2	C, N, R	H, J, K, C, E	B, D	S	P, R	ANG, DAL
RN^70@1431%&	1,430	1/2	C, N, R	H, J, K, C, E	B, D, F	S	P, R	ANG, DAL
RN^70@1451%&	1,450	1/2	C, N, R	H, J, K, C, E	B, D	S	P, R	ANG, DAL
RN^70@1471%&	1,470	1/2	C, N, R	H, J, K, C, E	B, D, F	S	P, R	ANG, DAL
RN^70@1491%&	1,490	1/2	C, N, R	H, J, K, C, E	B, D	S	P, R	ANG, DAL
RN^70@1501%&	1,500	1/2	C, N, R	H, J, K, C, E	B, D, F	S	P, R	ANG, DAL
RN^70@1521%&	1,520	1/2	C, N, R	H, J, K, C, E	B, D	S	P, R	ANG, DAL
RN^70@1541%&	1,540	1/2	C, N, R	H, J, K, C, E	B, D, F	S	P, R	ANG, DAL
RN^70@1561%&	1,560	1/2	C, N, R	H, J, K, C, E	B, D	S	P, R	ANG, DAL
RN^70@1581%&	1,580	1/2	C, N, R	H, J, K, C, E	B, D, F	S	P, R	ANG, DAL
RN^70@1601%&	1,600	1/2	C, N, R	H, J, K, C, E	B, D	S	P, R	ANG, DAL
RN^70@1621%&	1,620	1/2	C, N, R	H, J, K, C, E	B, D, F	S	P, R	ANG, DAL
RN^70@1641%&	1,640	1/2	C, N, R	H, J, K, C, E	B, D	S	P, R	ANG, DAL
RN^70@1651%&	1,650	1/2	C, N, R	H, J, K, C, E	B, D, F	S	P, R	ANG, DAL
RN^70@1671%&	1,670	1/2	C, N, R	H, J, K, C, E	B, D	S	P, R	ANG, DAL
RN^70@1691%&	1,690	1/2	C, N, R	H, J, K, C, E	B, D, F	S	P, R	ANG, DAL
RN^70@1721%&	1,720	1/2	C, N, R	H, J, K, C, E	B, D	S	P, R	ANG, DAL
RN^70@1741%&	1,740	1/2	C, N, R	H, J, K, C, E	B, D, F	S	P, R	ANG, DAL
RN^70@1761%&	1,760	1/2	C, N, R	H, J, K, C, E	B, D	S	P, R	ANG, DAL
RN^70@1781%&	1,780	1/2	C, N, R	H, J, K, C, E	B, D, F	S	P, R	ANG, DAL
RN^70@1801%&	1,800	1/2	C, N, R	H, J, K, C, E	B, D	S	P, R	ANG, DAL
RN^70@1821%&	1,820	1/2	C, N, R	H, J, K, C, E	B, D, F	S	P, R	ANG, DAL
RN^70@1841%&	1,840	1/2	C, N, R	H, J, K, C, E	B, D	S	P, R	ANG, DAL
RN^70@1871%&	1,870	1/2	C, N, R	H, J, K, C, E	B, D, F	S	P, R	ANG, DAL
RN^70@1891%&	1,890	1/2	C, N, R	H, J, K, C, E	B, D	S	P, R	ANG, DAL
RN^70@1911%&	1,910	1/2	C, N, R	H, J, K, C, E	B, D, F	S	P, R	ANG, DAL
RN^70@1931%&	1,930	1/2	C, N, R	H, J, K, C, E	B, D	S	P, R	ANG, DAL
RN^70@1961%&	1,960	1/2	C, N, R	H, J, K, C, E	B, D, F	S	P, R	ANG, DAL
RN^70@1981%&	1,980	1/2	C, N, R	H, J, K, C, E	B, D	S	P, R	ANG, DAL
RN^70@2001%&	2,000	1/2	C, N, R	H, J, K, C, E	B, D, F	S	P, R	ANG, DAL

RN^70@2031%&	2,030	1/2	C, N, R	H, J, K, C, E	B, D	S	P, R	ANG, DAL
RN^70@2051%&	2,050	1/2	C, N, R	H, J, K, C, E	B, D, F	S	P, R	ANG, DAL
RN^70@2081%&	2,080	1/2	C, N, R	H, J, K, C, E	B, D	S	P, R	ANG, DAL
RN^70@2101%&	2,100	1/2	C, N, R	H, J, K, C, E	B, D, F	S	P, R	ANG, DAL
RN^70@2131%&	2,130	1/2	C, N, R	H, J, K, C, E	B, D	S	P, R	ANG, DAL
RN^70@2151%&	2,150	1/2	C, N, R	H, J, K, C, E	B, D, F	S	P, R	ANG, DAL
RN^70@2181%&	2,180	1/2	C, N, R	H, J, K, C, E	B, D	S	P, R	ANG, DAL
RN^70@2211%&	2,210	1/2	C, N, R	H, J, K, C, E	B, D, F	S	P, R	ANG, DAL
RN^70@2231%&	2,230	1/2	C, N, R	H, J, K, C, E	B, D	S	P, R	ANG, DAL
RN^70@2261%&	2,260	1/2	C, N, R	H, J, K, C, E	B, D, F	S	P, R	ANG, DAL
RN^70@2291%&	2,290	1/2	C, N, R	H, J, K, C, E	B, D	S	P, R	ANG, DAL
RN^70@2321%&	2,320	1/2	C, N, R	H, J, K, C, E	B, D, F	S	P, R	ANG, DAL
RN^70@2341%&	2,340	1/2	C, N, R	H, J, K, C, E	B, D	S	P, R	ANG, DAL
RN^70@2371%&	2,370	1/2	C, N, R	H, J, K, C, E	B, D, F	S	P, R	ANG, DAL
RN^70@2401%&	2,400	1/2	C, N, R	H, J, K, C, E	B, D	S	P, R	ANG, DAL
RN^70@2431%&	2,430	1/2	C, N, R	H, J, K, C, E	B, D, F	S	P, R	ANG, DAL
RN^70@2461%&	2,460	1/2	C, N, R	H, J, K, C, E	B, D	S	P, R	ANG, DAL
RN^70@2491%&	2,490	1/2	C, N, R	H, J, K, C, E	B, D, F	S	P, R	ANG, DAL
RN^70@2521%&	2,520	1/2	C, N, R	H, J, K, C, E	B, D	S	P, R	ANG, DAL
RN^70@2551%&	2,550	1/2	C, N, R	H, J, K, C, E	B, D, F	S	P, R	ANG, DAL
RN^70@2581%&	2,580	1/2	C, N, R	H, J, K, C, E	B, D	S	P, R	ANG, DAL
RN^70@2611%&	2,610	1/2	C, N, R	H, J, K, C, E	B, D, F	S	P, R	ANG, DAL
RN^70@2641%&	2,640	1/2	C, N, R	H, J, K, C, E	B, D	S	P, R	ANG, DAL
RN^70@2671%&	2,670	1/2	C, N, R	H, J, K, C, E	B, D, F	S	P, R	ANG, DAL
RN^70@2711%&	2,710	1/2	C, N, R	H, J, K, C, E	B, D	S	P, R	ANG, DAL
RN^70@2741%&	2,740	1/2	C, N, R	H, J, K, C, E	B, D, F	S	P, R	ANG, DAL
RN^70@2771%&	2,770	1/2	C, N, R	H, J, K, C, E	B, D	S	P, R	ANG, DAL
RN^70@2801%&	2,800	1/2	C, N, R	H, J, K, C, E	B, D, F	S	P, R	ANG, DAL
RN^70@2841%&	2,840	1/2	C, N, R	H, J, K, C, E	B, D	S	P, R	ANG, DAL
RN^70@2871%&	2,870	1/2	C, N, R	H, J, K, C, E	B, D, F	S	P, R	ANG, DAL
RN^70@2911%&	2,910	1/2	C, N, R	H, J, K, C, E	B, D	S	P, R	ANG, DAL
RN^70@2941%&	2,940	1/2	C, N, R	H, J, K, C, E	B, D, F	S	P, R	ANG, DAL
RN^70@2981%&	2,980	1/2	C, N, R	H, J, K, C, E	B, D	S	P, R	ANG, DAL
RN^70@3011%&	3,010	1/2	C, N, R	H, J, K, C, E	B, D, F	S	P, R	ANG, DAL
RN^70@3051%&	3,050	1/2	C, N, R	H, J, K, C, E	B, D	S	P, R	ANG, DAL
RN^70@3091%&	3,090	1/2	C, N, R	H, J, K, C, E	B, D, F	S	P, R	ANG, DAL
RN^70@3121%&	3,120	1/2	C, N, R	H, J, K, C, E	B, D	S	P, R	ANG, DAL
RN^70@3161%&	3,160	1/2	C, N, R	H, J, K, C, E	B, D, F	S	P, R	ANG, DAL
RN^70@3201%&	3,200	1/2	C, N, R	H, J, K, C, E	B, D	S	P, R	ANG, DAL
RN^70@3241%&	3,240	1/2	C, N, R	H, J, K, C, E	B, D, F	S	P, R	ANG, DAL
RN^70@3281%&	3,280	1/2	C, N, R	H, J, K, C, E	B, D	S	P, R	ANG, DAL
RN^70@3321%&	3,320	1/2	C, N, R	H, J, K, C, E	B, D, F	S	P, R	ANG, DAL
RN^70@3361%&	3,360	1/2	C, N, R	H, J, K, C, E	B, D	S	P, R	ANG, DAL
RN^70@3401%&	3,400	1/2	C, N, R	H, J, K, C, E	B, D, F	S	P, R	ANG, DAL
RN^70@3441%&	3,440	1/2	C, N, R	H, J, K, C, E	B, D	S	P, R	ANG, DAL
RN^70@3481%&	3,480	1/2	C, N, R	H, J, K, C, E	B, D, F	S	P, R	ANG, DAL
RN^70@3521%&	3,520	1/2	C, N, R	H, J, K, C, E	B, D	S	P, R	ANG, DAL

RN^70@3571%&	3,570	1/2	C, N, R	H, J, K, C, E	B, D, F	S	P, R	ANG, DAL
RN^70@3611%&	3,610	1/2	C, N, R	H, J, K, C, E	B, D	S	P, R	ANG, DAL
RN^70@3651%&	3,650	1/2	C, N, R	H, J, K, C, E	B, D, F	S	P, R	ANG, DAL
RN^70@3701%&	3,700	1/2	C, N, R	H, J, K, C, E	B, D	S	P, R	ANG, DAL
RN^70@3741%&	3,740	1/2	C, N, R	H, J, K, C, E	B, D, F	S	P, R	ANG, DAL
RN^70@3791%&	3,790	1/2	C, N, R	H, J, K, C, E	B, D	S	P, R	ANG, DAL
RN^70@3831%&	3,830	1/2	C, N, R	H, J, K, C, E	B, D, F	S	P, R	ANG, DAL
RN^70@3881%&	3,880	1/2	C, N, R	H, J, K, C, E	B, D	S	P, R	ANG, DAL
RN^70@3921%&	3,920	1/2	C, N, R	H, J, K, C, E	B, D, F	S	P, R	ANG, DAL
RN^70@3971%&	3,970	1/2	C, N, R	H, J, K, C, E	B, D	S	P, R	ANG, DAL
RN^70@4021%&	4,020	1/2	C, N, R	H, J, K, C, E	B, D, F	S	P, R	ANG, DAL
RN^70@4071%&	4,070	1/2	C, N, R	H, J, K, C, E	B, D	S	P, R	ANG, DAL
RN^70@4121%&	4,120	1/2	C, N, R	H, J, K, C, E	B, D, F	S	P, R	ANG, DAL
RN^70@4171%&	4,170	1/2	C, N, R	H, J, K, C, E	B, D	S	P, R	ANG, DAL
RN^70@4221%&	4,220	1/2	C, N, R	H, J, K, C, E	B, D, F	S	P, R	ANG, DAL
RN^70@4271%&	4,270	1/2	C, N, R	H, J, K, C, E	B, D	S	P, R	ANG, DAL
RN^70@4321%&	4,320	1/2	C, N, R	H, J, K, C, E	B, D, F	S	P, R	ANG, DAL
RN^70@4371%&	4,370	1/2	C, N, R	H, J, K, C, E	B, D	S	P, R	ANG, DAL
RN^70@4421%&	4,420	1/2	C, N, R	H, J, K, C, E	B, D, F	S	P, R	ANG, DAL
RN^70@4481%&	4,480	1/2	C, N, R	H, J, K, C, E	B, D	S	P, R	ANG, DAL
RN^70@4531%&	4,530	1/2	C, N, R	H, J, K, C, E	B, D, F	S	P, R	ANG, DAL
RN^70@4591%&	4,590	1/2	C, N, R	H, J, K, C, E	B, D	S	P, R	ANG, DAL
RN^70@4641%&	4,640	1/2	C, N, R	H, J, K, C, E	B, D, F	S	P, R	ANG, DAL
RN^70@4701%&	4,700	1/2	C, N, R	H, J, K, C, E	B, D	S	P, R	ANG, DAL
RN^70@4751%&	4,750	1/2	C, N, R	H, J, K, C, E	B, D, F	S	P, R	ANG, DAL
RN^70@4811%&	4,810	1/2	C, N, R	H, J, K, C, E	B, D	S	P, R	ANG, DAL
RN^70@4871%&	4,870	1/2	C, N, R	H, J, K, C, E	B, D, F	S	P, R	ANG, DAL
RN^70@4931%&	4,930	1/2	C, N, R	H, J, K, C, E	B, D	S	P, R	ANG, DAL
RN^70@4991%&	4,990	1/2	C, N, R	H, J, K, C, E	B, D, F	S	P, R	ANG, DAL
RN^70@5051%&	5,050	1/2	C, N, R	H, J, K, C, E	B, D	S	P, R	ANG, DAL
RN^70@5111%&	5,110	1/2	C, N, R	H, J, K, C, E	B, D, F	S	P, R	ANG, DAL
RN^70@5171%&	5,170	1/2	C, N, R	H, J, K, C, E	B, D	S	P, R	ANG, DAL
RN^70@5231%&	5,230	1/2	C, N, R	H, J, K, C, E	B, D, F	S	P, R	ANG, DAL
RN^70@5301%&	5,300	1/2	C, N, R	H, J, K, C, E	B, D	S	P, R	ANG, DAL
RN^70@5361%&	5,360	1/2	C, N, R	H, J, K, C, E	B, D, F	S	P, R	ANG, DAL
RN^70@5421%&	5,420	1/2	C, N, R	H, J, K, C, E	B, D	S	P, R	ANG, DAL
RN^70@5491%&	5,490	1/2	C, N, R	H, J, K, C, E	B, D, F	S	P, R	ANG, DAL
RN^70@5561%&	5,560	1/2	C, N, R	H, J, K, C, E	B, D	S	P, R	ANG, DAL
RN^70@5621%&	5,620	1/2	C, N, R	H, J, K, C, E	B, D, F	S	P, R	ANG, DAL
RN^70@5691%&	5,690	1/2	C, N, R	H, J, K, C, E	B, D	S	P, R	ANG, DAL
RN^70@5761%&	5,760	1/2	C, N, R	H, J, K, C, E	B, D, F	S	P, R	ANG, DAL
RN^70@5831%&	5,830	1/2	C, N, R	H, J, K, C, E	B, D	S	P, R	ANG, DAL
RN^70@5901%&	5,900	1/2	C, N, R	H, J, K, C, E	B, D, F	S	P, R	ANG, DAL
RN^70@5971%&	5,970	1/2	C, N, R	H, J, K, C, E	B, D	S	P, R	ANG, DAL
RN^70@6041%&	6,040	1/2	C, N, R	H, J, K, C, E	B, D, F	S	P, R	ANG, DAL
RN^70@6121%&	6,120	1/2	C, N, R	H, J, K, C, E	B, D	S	P, R	ANG, DAL
RN^70@6191%&	6,190	1/2	C, N, R	H, J, K, C, E	B, D, F	S	P, R	ANG, DAL

RN^70@6261%&	6,260	1/2	C, N, R	H, J, K, C, E	B, D	S	P, R	ANG, DAL
RN^70@6341%&	6,340	1/2	C, N, R	H, J, K, C, E	B, D, F	S	P, R	ANG, DAL
RN^70@6421%&	6,420	1/2	C, N, R	H, J, K, C, E	B, D	S	P, R	ANG, DAL
RN^70@6491%&	6,490	1/2	C, N, R	H, J, K, C, E	B, D, F	S	P, R	ANG, DAL
RN^70@6571%&	6,570	1/2	C, N, R	H, J, K, C, E	B, D	S	P, R	ANG, DAL
RN^70@6651%&	6,650	1/2	C, N, R	H, J, K, C, E	B, D, F	S	P, R	ANG, DAL
RN^70@6731%&	6,730	1/2	C, N, R	H, J, K, C, E	B, D	S	P, R	ANG, DAL
RN^70@6811%&	6,810	1/2	C, N, R	H, J, K, C, E	B, D, F	S	P, R	ANG, DAL
RN^70@6901%&	6,900	1/2	C, N, R	H, J, K, C, E	B, D	S	P, R	ANG, DAL
RN^70@6981%&	6,980	1/2	C, N, R	H, J, K, C, E	B, D, F	S	P, R	ANG, DAL
RN^70@7061%&	7,060	1/2	C, N, R	H, J, K, C, E	B, D	S	P, R	ANG, DAL
RN^70@7151%&	7,150	1/2	C, N, R	H, J, K, C, E	B, D, F	S	P, R	ANG, DAL
RN^70@7231%&	7,230	1/2	C, N, R	H, J, K, C, E	B, D	S	P, R	ANG, DAL
RN^70@7321%&	7,320	1/2	C, N, R	H, J, K, C, E	B, D, F	S	P, R	ANG, DAL
RN^70@7411%&	7,410	1/2	C, N, R	H, J, K, C, E	B, D	S	P, R	ANG, DAL
RN^70@7501%&	7,500	1/2	C, N, R	H, J, K, C, E	B, D, F	S	P, R	ANG, DAL
RN^70@7591%&	7,590	1/2	C, N, R	H, J, K, C, E	B, D	S	P, R	ANG, DAL
RN^70@7681%&	7,680	1/2	C, N, R	H, J, K, C, E	B, D, F	S	P, R	ANG, DAL
RN^70@7771%&	7,770	1/2	C, N, R	H, J, K, C, E	B, D	S	P, R	ANG, DAL
RN^70@7871%&	7,870	1/2	C, N, R	H, J, K, C, E	B, D, F	S	P, R	ANG, DAL
RN^70@7961%&	7,960	1/2	C, N, R	H, J, K, C, E	B, D	S	P, R	ANG, DAL
RN^70@8061%&	8,060	1/2	C, N, R	H, J, K, C, E	B, D, F	S	P, R	ANG, DAL
RN^70@8161%&	8,160	1/2	C, N, R	H, J, K, C, E	B, D	S	P, R	ANG, DAL
RN^70@8251%&	8,250	1/2	C, N, R	H, J, K, C, E	B, D, F	S	P, R	ANG, DAL
RN^70@8351%&	8,350	1/2	C, N, R	H, J, K, C, E	B, D	S	P, R	ANG, DAL
RN^70@8451%&	8,450	1/2	C, N, R	H, J, K, C, E	B, D, F	S	P, R	ANG, DAL
RN^70@8561%&	8,560	1/2	C, N, R	H, J, K, C, E	B, D	S	P, R	ANG, DAL
RN^70@8661%&	8,660	1/2	C, N, R	H, J, K, C, E	B, D, F	S	P, R	ANG, DAL
RN^70@8761%&	8,760	1/2	C, N, R	H, J, K, C, E	B, D	S	P, R	ANG, DAL
RN^70@8871%&	8,870	1/2	C, N, R	H, J, K, C, E	B, D, F	S	P, R	ANG, DAL
RN^70@8981%&	8,980	1/2	C, N, R	H, J, K, C, E	B, D	S	P, R	ANG, DAL
RN^70@9091%&	9,090	1/2	C, N, R	H, J, K, C, E	B, D, F	S	P, R	ANG, DAL
RN^70@9201%&	9,200	1/2	C, N, R	H, J, K, C, E	B, D	S	P, R	ANG, DAL
RN^70@9311%&	9,310	1/2	C, N, R	H, J, K, C, E	B, D, F	S	P, R	ANG, DAL
RN^70@9421%&	9,420	1/2	C, N, R	H, J, K, C, E	B, D	S	P, R	ANG, DAL
RN^70@9531%&	9,530	1/2	C, N, R	H, J, K, C, E	B, D, F	S	P, R	ANG, DAL
RN^70@9651%&	9,650	1/2	C, N, R	H, J, K, C, E	B, D	S	P, R	ANG, DAL
RN^70@9761%&	9,760	1/2	C, N, R	H, J, K, C, E	B, D, F	S	P, R	ANG, DAL
RN^70@9881%&	9,880	1/2	C, N, R	H, J, K, C, E	B, D	S	P, R	ANG, DAL
RN^70@1002%&	10,000	1/2	C, N, R	H, J, K, C, E	B, D, F	S	P, R	ANG, DAL
RN^70@1012%&	10,100	1/2	C, N, R	H, J, K, C, E	B, D	S	P, R	ANG, DAL
RN^70@1022%&	10,200	1/2	C, N, R	H, J, K, C, E	B, D, F	S	P, R	ANG, DAL
RN^70@1042%&	10,400	1/2	C, N, R	H, J, K, C, E	B, D	S	P, R	ANG, DAL
RN^70@1052%&	10,500	1/2	C, N, R	H, J, K, C, E	B, D, F	S	P, R	ANG, DAL
RN^70@1062%&	10,600	1/2	C, N, R	H, J, K, C, E	B, D	S	P, R	ANG, DAL
RN^70@1072%&	10,700	1/2	C, N, R	H, J, K, C, E	B, D, F	S	P, R	ANG, DAL
RN^70@1092%&	10,900	1/2	C, N, R	H, J, K, C, E	B, D	S	P, R	ANG, DAL

RN^70@1102%&	11,000	1/2	C, N, R	H, J, K, C, E	B, D, F	S	P, R	ANG, DAL
RN^70@1112%&	11,100	1/2	C, N, R	H, J, K, C, E	B, D	S	P, R	ANG, DAL
RN^70@1132%&	11,300	1/2	C, N, R	H, J, K, C, E	B, D, F	S	P, R	ANG, DAL
RN^70@1142%&	11,400	1/2	C, N, R	H, J, K, C, E	B, D	S	P, R	ANG, DAL
RN^70@1152%&	11,500	1/2	C, N, R	H, J, K, C, E	B, D, F	S	P, R	ANG, DAL
RN^70@1172%&	11,700	1/2	C, N, R	H, J, K, C, E	B, D	S	P, R	ANG, DAL
RN^70@1182%&	11,800	1/2	C, N, R	H, J, K, C, E	B, D, F	S	P, R	ANG, DAL
RN^70@1202%&	12,000	1/2	C, N, R	H, J, K, C, E	B, D	S	P, R	ANG, DAL
RN^70@1212%&	12,100	1/2	C, N, R	H, J, K, C, E	B, D, F	S	P, R	ANG, DAL
RN^70@1232%&	12,300	1/2	C, N, R	H, J, K, C, E	B, D	S	P, R	ANG, DAL
RN^70@1242%&	12,400	1/2	C, N, R	H, J, K, C, E	B, D, F	S	P, R	ANG, DAL
RN^70@1262%&	12,600	1/2	C, N, R	H, J, K, C, E	B, D	S	P, R	ANG, DAL
RN^70@1272%&	12,700	1/2	C, N, R	H, J, K, C, E	B, D, F	S	P, R	ANG, DAL
RN^70@1292%&	12,900	1/2	C, N, R	H, J, K, C, E	B, D	S	P, R	ANG, DAL
RN^70@1302%&	13,000	1/2	C, N, R	H, J, K, C, E	B, D, F	S	P, R	ANG, DAL
RN^70@1322%&	13,200	1/2	C, N, R	H, J, K, C, E	B, D	S	P, R	ANG, DAL
RN^70@1332%&	13,300	1/2	C, N, R	H, J, K, C, E	B, D, F	S	P, R	ANG, DAL
RN^70@1352%&	13,500	1/2	C, N, R	H, J, K, C, E	B, D	S	P, R	ANG, DAL
RN^70@1372%&	13,700	1/2	C, N, R	H, J, K, C, E	B, D, F	S	P, R	ANG, DAL
RN^70@1382%&	13,800	1/2	C, N, R	H, J, K, C, E	B, D	S	P, R	ANG, DAL
RN^70@1402%&	14,000	1/2	C, N, R	H, J, K, C, E	B, D, F	S	P, R	ANG, DAL
RN^70@1422%&	14,200	1/2	C, N, R	H, J, K, C, E	B, D	S	P, R	ANG, DAL
RN^70@1432%&	14,300	1/2	C, N, R	H, J, K, C, E	B, D, F	S	P, R	ANG, DAL
RN^70@1452%&	14,500	1/2	C, N, R	H, J, K, C, E	B, D	S	P, R	ANG, DAL
RN^70@1472%&	14,700	1/2	C, N, R	H, J, K, C, E	B, D, F	S	P, R	ANG, DAL
RN^70@1492%&	14,900	1/2	C, N, R	H, J, K, C, E	B, D	S	P, R	ANG, DAL
RN^70@1502%&	15,000	1/2	C, N, R	H, J, K, C, E	B, D, F	S	P, R	ANG, DAL
RN^70@1522%&	15,200	1/2	C, N, R	H, J, K, C, E	B, D	S	P, R	ANG, DAL
RN^70@1542%&	15,400	1/2	C, N, R	H, J, K, C, E	B, D, F	S	P, R	ANG, DAL
RN^70@1562%&	15,600	1/2	C, N, R	H, J, K, C, E	B, D	S	P, R	ANG, DAL
RN^70@1582%&	15,800	1/2	C, N, R	H, J, K, C, E	B, D, F	S	P, R	ANG, DAL
RN^70@1602%&	16,000	1/2	C, N, R	H, J, K, C, E	B, D	S	P, R	ANG, DAL
RN^70@1622%&	16,200	1/2	C, N, R	H, J, K, C, E	B, D, F	S	P, R	ANG, DAL
RN^70@1642%&	16,400	1/2	C, N, R	H, J, K, C, E	B, D	S	P, R	ANG, DAL
RN^70@1652%&	16,500	1/2	C, N, R	H, J, K, C, E	B, D, F	S	P, R	ANG, DAL
RN^70@1672%&	16,700	1/2	C, N, R	H, J, K, C, E	B, D	S	P, R	ANG, DAL
RN^70@1692%&	16,900	1/2	C, N, R	H, J, K, C, E	B, D, F	S	P, R	ANG, DAL
RN^70@1722%&	17,200	1/2	C, N, R	H, J, K, C, E	B, D	S	P, R	ANG, DAL
RN^70@1742%&	17,400	1/2	C, N, R	H, J, K, C, E	B, D, F	S	P, R	ANG, DAL
RN^70@1762%&	17,600	1/2	C, N, R	H, J, K, C, E	B, D	S	P, R	ANG, DAL
RN^70@1782%&	17,800	1/2	C, N, R	H, J, K, C, E	B, D, F	S	P, R	ANG, DAL
RN^70@1802%&	18,000	1/2	C, N, R	H, J, K, C, E	B, D	S	P, R	ANG, DAL
RN^70@1822%&	18,200	1/2	C, N, R	H, J, K, C, E	B, D, F	S	P, R	ANG, DAL
RN^70@1842%&	18,400	1/2	C, N, R	H, J, K, C, E	B, D	S	P, R	ANG, DAL
RN^70@1872%&	18,700	1/2	C, N, R	H, J, K, C, E	B, D, F	S	P, R	ANG, DAL
RN^70@1892%&	18,900	1/2	C, N, R	H, J, K, C, E	B, D	S	P, R	ANG, DAL
RN^70@1912%&	19,100	1/2	C, N, R	H, J, K, C, E	B, D, F	S	P, R	ANG, DAL

RN^70@1932%&	19,300	1/2	C, N, R	H, J, K, C, E	B, D	S	P, R	ANG, DAL
RN^70@1962%&	19,600	1/2	C, N, R	H, J, K, C, E	B, D, F	S	P, R	ANG, DAL
RN^70@1982%&	19,800	1/2	C, N, R	H, J, K, C, E	B, D	S	P, R	ANG, DAL
RN^70@2002%&	20,000	1/2	C, N, R	H, J, K, C, E	B, D, F	S	P, R	ANG, DAL
RN^70@2032%&	20,300	1/2	C, N, R	H, J, K, C, E	B, D	S	P, R	ANG, DAL
RN^70@2052%&	20,500	1/2	C, N, R	H, J, K, C, E	B, D, F	S	P, R	ANG, DAL
RN^70@2082%&	20,800	1/2	C, N, R	H, J, K, C, E	B, D	S	P, R	ANG, DAL
RN^70@2102%&	21,000	1/2	C, N, R	H, J, K, C, E	B, D, F	S	P, R	ANG, DAL
RN^70@2132%&	21,300	1/2	C, N, R	H, J, K, C, E	B, D	S	P, R	ANG, DAL
RN^70@2152%&	21,500	1/2	C, N, R	H, J, K, C, E	B, D, F	S	P, R	ANG, DAL
RN^70@2182%&	21,800	1/2	C, N, R	H, J, K, C, E	B, D	S	P, R	ANG, DAL
RN^70@2212%&	22,100	1/2	C, N, R	H, J, K, C, E	B, D, F	S	P, R	ANG, DAL
RN^70@2232%&	22,300	1/2	C, N, R	H, J, K, C, E	B, D	S	P, R	ANG, DAL
RN^70@2262%&	22,600	1/2	C, N, R	H, J, K, C, E	B, D, F	S	P, R	ANG, DAL
RN^70@2292%&	22,900	1/2	C, N, R	H, J, K, C, E	B, D	S	P, R	ANG, DAL
RN^70@2322%&	23,200	1/2	C, N, R	H, J, K, C, E	B, D, F	S	P, R	ANG, DAL
RN^70@2342%&	23,400	1/2	C, N, R	H, J, K, C, E	B, D	S	P, R	ANG, DAL
RN^70@2372%&	23,700	1/2	C, N, R	H, J, K, C, E	B, D, F	S	P, R	ANG, DAL
RN^70@2402%&	24,000	1/2	C, N, R	H, J, K, C, E	B, D	S	P, R	ANG, DAL
RN^70@2432%&	24,300	1/2	C, N, R	H, J, K, C, E	B, D, F	S	P, R	ANG, DAL
RN^70@2462%&	24,600	1/2	C, N, R	H, J, K, C, E	B, D	S	P, R	ANG, DAL
RN^70@2492%&	24,900	1/2	C, N, R	H, J, K, C, E	B, D, F	S	P, R	ANG, DAL
RN^70@2522%&	25,200	1/2	C, N, R	H, J, K, C, E	B, D	S	P, R	ANG, DAL
RN^70@2552%&	25,500	1/2	C, N, R	H, J, K, C, E	B, D, F	S	P, R	ANG, DAL
RN^70@2582%&	25,800	1/2	C, N, R	H, J, K, C, E	B, D	S	P, R	ANG, DAL
RN^70@2612%&	26,100	1/2	C, N, R	H, J, K, C, E	B, D, F	S	P, R	ANG, DAL
RN^70@2642%&	26,400	1/2	C, N, R	H, J, K, C, E	B, D	S	P, R	ANG, DAL
RN^70@2672%&	26,700	1/2	C, N, R	H, J, K, C, E	B, D, F	S	P, R	ANG, DAL
RN^70@2712%&	27,100	1/2	C, N, R	H, J, K, C, E	B, D	S	P, R	ANG, DAL
RN^70@2742%&	27,400	1/2	C, N, R	H, J, K, C, E	B, D, F	S	P, R	ANG, DAL
RN^70@2772%&	27,700	1/2	C, N, R	H, J, K, C, E	B, D	S	P, R	ANG, DAL
RN^70@2802%&	28,000	1/2	C, N, R	H, J, K, C, E	B, D, F	S	P, R	ANG, DAL
RN^70@2842%&	28,400	1/2	C, N, R	H, J, K, C, E	B, D	S	P, R	ANG, DAL
RN^70@2872%&	28,700	1/2	C, N, R	H, J, K, C, E	B, D, F	S	P, R	ANG, DAL
RN^70@2912%&	29,100	1/2	C, N, R	H, J, K, C, E	B, D	S	P, R	ANG, DAL
RN^70@2942%&	29,400	1/2	C, N, R	H, J, K, C, E	B, D, F	S	P, R	ANG, DAL
RN^70@2982%&	29,800	1/2	C, N, R	H, J, K, C, E	B, D	S	P, R	ANG, DAL
RN^70@3012%&	30,100	1/2	C, N, R	H, J, K, C, E	B, D, F	S	P, R	ANG, DAL
RN^70@3052%&	30,500	1/2	C, N, R	H, J, K, C, E	B, D	S	P, R	ANG, DAL
RN^70@3092%&	30,900	1/2	C, N, R	H, J, K, C, E	B, D, F	S	P, R	ANG, DAL
RN^70@3122%&	31,200	1/2	C, N, R	H, J, K, C, E	B, D	S	P, R	ANG, DAL
RN^70@3162%&	31,600	1/2	C, N, R	H, J, K, C, E	B, D, F	S	P, R	ANG, DAL
RN^70@3202%&	32,000	1/2	C, N, R	H, J, K, C, E	B, D	S	P, R	ANG, DAL
RN^70@3242%&	32,400	1/2	C, N, R	H, J, K, C, E	B, D, F	S	P, R	ANG, DAL
RN^70@3282%&	32,800	1/2	C, N, R	H, J, K, C, E	B, D	S	P, R	ANG, DAL
RN^70@3322%&	33,200	1/2	C, N, R	H, J, K, C, E	B, D, F	S	P, R	ANG, DAL
RN^70@3362%&	33,600	1/2	C, N, R	H, J, K, C, E	B, D	S	P, R	ANG, DAL

RN^70@3402%&	34,000	1/2	C, N, R	H, J, K, C, E	B, D, F	S	P, R	ANG, DAL
RN^70@3442%&	34,400	1/2	C, N, R	H, J, K, C, E	B, D	S	P, R	ANG, DAL
RN^70@3482%&	34,800	1/2	C, N, R	H, J, K, C, E	B, D, F	S	P, R	ANG, DAL
RN^70@3522%&	35,200	1/2	C, N, R	H, J, K, C, E	B, D	S	P, R	ANG, DAL
RN^70@3572%&	35,700	1/2	C, N, R	H, J, K, C, E	B, D, F	S	P, R	ANG, DAL
RN^70@3612%&	36,100	1/2	C, N, R	H, J, K, C, E	B, D	S	P, R	ANG, DAL
RN^70@3652%&	36,500	1/2	C, N, R	H, J, K, C, E	B, D, F	S	P, R	ANG, DAL
RN^70@3702%&	37,000	1/2	C, N, R	H, J, K, C, E	B, D	S	P, R	ANG, DAL
RN^70@3742%&	37,400	1/2	C, N, R	H, J, K, C, E	B, D, F	S	P, R	ANG, DAL
RN^70@3792%&	37,900	1/2	C, N, R	H, J, K, C, E	B, D	S	P, R	ANG, DAL
RN^70@3832%&	38,300	1/2	C, N, R	H, J, K, C, E	B, D, F	S	P, R	ANG, DAL
RN^70@3882%&	38,800	1/2	C, N, R	H, J, K, C, E	B, D	S	P, R	ANG, DAL
RN^70@3922%&	39,200	1/2	C, N, R	H, J, K, C, E	B, D, F	S	P, R	ANG, DAL
RN^70@3972%&	39,700	1/2	C, N, R	H, J, K, C, E	B, D	S	P, R	ANG, DAL
RN^70@4022%&	40,200	1/2	C, N, R	H, J, K, C, E	B, D, F	S	P, R	ANG, DAL
RN^70@4072%&	40,700	1/2	C, N, R	H, J, K, C, E	B, D	S	P, R	ANG, DAL
RN^70@4122%&	41,200	1/2	C, N, R	H, J, K, C, E	B, D, F	S	P, R	ANG, DAL
RN^70@4172%&	41,700	1/2	C, N, R	H, J, K, C, E	B, D	S	P, R	ANG, DAL
RN^70@4222%&	42,200	1/2	C, N, R	H, J, K, C, E	B, D, F	S	P, R	ANG, DAL
RN^70@4272%&	42,700	1/2	C, N, R	H, J, K, C, E	B, D	S	P, R	ANG, DAL
RN^70@4322%&	43,200	1/2	C, N, R	H, J, K, C, E	B, D, F	S	P, R	ANG, DAL
RN^70@4372%&	43,700	1/2	C, N, R	H, J, K, C, E	B, D	S	P, R	ANG, DAL
RN^70@4422%&	44,200	1/2	C, N, R	H, J, K, C, E	B, D, F	S	P, R	ANG, DAL
RN^70@4482%&	44,800	1/2	C, N, R	H, J, K, C, E	B, D	S	P, R	ANG, DAL
RN^70@4532%&	45,300	1/2	C, N, R	H, J, K, C, E	B, D, F	S	P, R	ANG, DAL
RN^70@4592%&	45,900	1/2	C, N, R	H, J, K, C, E	B, D	S	P, R	ANG, DAL
RN^70@4642%&	46,400	1/2	C, N, R	H, J, K, C, E	B, D, F	S	P, R	ANG, DAL
RN^70@4702%&	47,000	1/2	C, N, R	H, J, K, C, E	B, D	S	P, R	ANG, DAL
RN^70@4752%&	47,500	1/2	C, N, R	H, J, K, C, E	B, D, F	S	P, R	ANG, DAL
RN^70@4812%&	48,100	1/2	C, N, R	H, J, K, C, E	B, D	S	P, R	ANG, DAL
RN^70@4872%&	48,700	1/2	C, N, R	H, J, K, C, E	B, D, F	S	P, R	ANG, DAL
RN^70@4932%&	49,300	1/2	C, N, R	H, J, K, C, E	B, D	S	P, R	ANG, DAL
RN^70@4992%&	49,900	1/2	C, N, R	H, J, K, C, E	B, D, F	S	P, R	ANG, DAL
RN^70@5052%&	50,500	1/2	C, N, R	H, J, K, C, E	B, D	S	P, R	ANG, DAL
RN^70@5112%&	51,100	1/2	C, N, R	H, J, K, C, E	B, D, F	S	P, R	ANG, DAL
RN^70@5172%&	51,700	1/2	C, N, R	H, J, K, C, E	B, D	S	P, R	ANG, DAL
RN^70@5232%&	52,300	1/2	C, N, R	H, J, K, C, E	B, D, F	S	P, R	ANG, DAL
RN^70@5302%&	53,000	1/2	C, N, R	H, J, K, C, E	B, D	S	P, R	ANG, DAL
RN^70@5362%&	53,600	1/2	C, N, R	H, J, K, C, E	B, D, F	S	P, R	ANG, DAL
RN^70@5422%&	54,200	1/2	C, N, R	H, J, K, C, E	B, D	S	P, R	ANG, DAL
RN^70@5492%&	54,900	1/2	C, N, R	H, J, K, C, E	B, D, F	S	P, R	ANG, DAL
RN^70@5562%&	55,600	1/2	C, N, R	H, J, K, C, E	B, D	S	P, R	ANG, DAL
RN^70@5622%&	56,200	1/2	C, N, R	H, J, K, C, E	B, D, F	S	P, R	ANG, DAL
RN^70@5692%&	56,900	1/2	C, N, R	H, J, K, C, E	B, D	S	P, R	ANG, DAL
RN^70@5762%&	57,600	1/2	C, N, R	H, J, K, C, E	B, D, F	S	P, R	ANG, DAL
RN^70@5832%&	58,300	1/2	C, N, R	H, J, K, C, E	B, D	S	P, R	ANG, DAL
RN^70@5902%&	59,000	1/2	C, N, R	H, J, K, C, E	B, D, F	S	P, R	ANG, DAL

RN^70@5972%&	59,700	1/2	C, N, R	H, J, K, C, E	B, D	S	P, R	ANG, DAL
RN^70@6042%&	60,400	1/2	C, N, R	H, J, K, C, E	B, D, F	S	P, R	ANG, DAL
RN^70@6122%&	61,200	1/2	C, N, R	H, J, K, C, E	B, D	S	P, R	ANG, DAL
RN^70@6192%&	61,900	1/2	C, N, R	H, J, K, C, E	B, D, F	S	P, R	ANG, DAL
RN^70@6262%&	62,600	1/2	C, N, R	H, J, K, C, E	B, D	S	P, R	ANG, DAL
RN^70@6342%&	63,400	1/2	C, N, R	H, J, K, C, E	B, D, F	S	P, R	ANG, DAL
RN^70@6422%&	64,200	1/2	C, N, R	H, J, K, C, E	B, D	S	P, R	ANG, DAL
RN^70@6492%&	64,900	1/2	C, N, R	H, J, K, C, E	B, D, F	S	P, R	ANG, DAL
RN^70@6572%&	65,700	1/2	C, N, R	H, J, K, C, E	B, D	S	P, R	ANG, DAL
RN^70@6652%&	66,500	1/2	C, N, R	H, J, K, C, E	B, D, F	S	P, R	ANG, DAL
RN^70@6732%&	67,300	1/2	C, N, R	H, J, K, C, E	B, D	S	P, R	ANG, DAL
RN^70@6812%&	68,100	1/2	C, N, R	H, J, K, C, E	B, D, F	S	P, R	ANG, DAL
RN^70@6902%&	69,000	1/2	C, N, R	H, J, K, C, E	B, D	S	P, R	ANG, DAL
RN^70@6982%&	69,800	1/2	C, N, R	H, J, K, C, E	B, D, F	S	P, R	ANG, DAL
RN^70@7062%&	70,600	1/2	C, N, R	H, J, K, C, E	B, D	S	P, R	ANG, DAL
RN^70@7152%&	71,500	1/2	C, N, R	H, J, K, C, E	B, D, F	S	P, R	ANG, DAL
RN^70@7232%&	72,300	1/2	C, N, R	H, J, K, C, E	B, D	S	P, R	ANG, DAL
RN^70@7322%&	73,200	1/2	C, N, R	H, J, K, C, E	B, D, F	S	P, R	ANG, DAL
RN^70@7412%&	74,100	1/2	C, N, R	H, J, K, C, E	B, D	S	P, R	ANG, DAL
RN^70@7502%&	75,000	1/2	C, N, R	H, J, K, C, E	B, D, F	S	P, R	ANG, DAL
RN^70@7592%&	75,900	1/2	C, N, R	H, J, K, C, E	B, D	S	P, R	ANG, DAL
RN^70@7682%&	76,800	1/2	C, N, R	H, J, K, C, E	B, D, F	S	P, R	ANG, DAL
RN^70@7772%&	77,700	1/2	C, N, R	H, J, K, C, E	B, D	S	P, R	ANG, DAL
RN^70@7872%&	78,700	1/2	C, N, R	H, J, K, C, E	B, D, F	S	P, R	ANG, DAL
RN^70@7962%&	79,600	1/2	C, N, R	H, J, K, C, E	B, D	S	P, R	ANG, DAL
RN^70@8062%&	80,600	1/2	C, N, R	H, J, K, C, E	B, D, F	S	P, R	ANG, DAL
RN^70@8162%&	81,600	1/2	C, N, R	H, J, K, C, E	B, D	S	P, R	ANG, DAL
RN^70@8252%&	82,500	1/2	C, N, R	H, J, K, C, E	B, D, F	S	P, R	ANG, DAL
RN^70@8352%&	83,500	1/2	C, N, R	H, J, K, C, E	B, D	S	P, R	ANG, DAL
RN^70@8452%&	84,500	1/2	C, N, R	H, J, K, C, E	B, D, F	S	P, R	ANG, DAL
RN^70@8562%&	85,600	1/2	C, N, R	H, J, K, C, E	B, D	S	P, R	ANG, DAL
RN^70@8662%&	86,600	1/2	C, N, R	H, J, K, C, E	B, D, F	S	P, R	ANG, DAL
RN^70@8762%&	87,600	1/2	C, N, R	H, J, K, C, E	B, D	S	P, R	ANG, DAL
RN^70@8872%&	88,700	1/2	C, N, R	H, J, K, C, E	B, D, F	S	P, R	ANG, DAL
RN^70@8982%&	89,800	1/2	C, N, R	H, J, K, C, E	B, D	S	P, R	ANG, DAL
RN^70@9092%&	90,900	1/2	C, N, R	H, J, K, C, E	B, D, F	S	P, R	ANG, DAL
RN^70@9202%&	92,000	1/2	C, N, R	H, J, K, C, E	B, D	S	P, R	ANG, DAL
RN^70@9312%&	93,100	1/2	C, N, R	H, J, K, C, E	B, D, F	S	P, R	ANG, DAL
RN^70@9422%&	94,200	1/2	C, N, R	H, J, K, C, E	B, D	S	P, R	ANG, DAL
RN^70@9532%&	95,300	1/2	C, N, R	H, J, K, C, E	B, D, F	S	P, R	ANG, DAL
RN^70@9652%&	96,500	1/2	C, N, R	H, J, K, C, E	B, D	S	P, R	ANG, DAL
RN^70@9762%&	97,600	1/2	C, N, R	H, J, K, C, E	B, D, F	S	P, R	ANG, DAL
RN^70@9882%&	98,800	1/2	C, N, R	H, J, K, C, E	B, D	S	P, R	ANG, DAL
RN^70@1003%&	100,000	1/2	C, N, R	H, J, K, C, E	B, D, F	S	P, R	ANG, DAL
RN^70@1013%&	101,000	1/2	C, N, R	H, J, K, C, E	B, D	S	P, R	ANG, DAL
RN^70@1023%&	102,000	1/2	C, N, R	H, J, K, C, E	B, D, F	S	P, R	ANG, DAL
RN^70@1043%&	104,000	1/2	C, N, R	H, J, K, C, E	B, D	S	P, R	ANG, DAL

RN^70@1053%&	105,000	1/2	C, N, R	H, J, K, C, E	B, D, F	S	P, R	ANG, DAL
RN^70@1063%&	106,000	1/2	C, N, R	H, J, K, C, E	B, D	S	P, R	ANG, DAL
RN^70@1073%&	107,000	1/2	C, N, R	H, J, K, C, E	B, D, F	S	P, R	ANG, DAL
RN^70@1093%&	109,000	1/2	C, N, R	H, J, K, C, E	B, D	S	P, R	ANG, DAL
RN^70@1103%&	110,000	1/2	C, N, R	H, J, K, C, E	B, D, F	S	P, R	ANG, DAL
RN^70@1113%&	111,000	1/2	C, N, R	H, J, K, C, E	B, D	S	P, R	ANG, DAL
RN^70@1133%&	113,000	1/2	C, N, R	H, J, K, C, E	B, D, F	S	P, R	ANG, DAL
RN^70@1143%&	114,000	1/2	C, N, R	H, J, K, C, E	B, D	S	P, R	ANG, DAL
RN^70@1153%&	115,000	1/2	C, N, R	H, J, K, C, E	B, D, F	S	P, R	ANG, DAL
RN^70@1173%&	117,000	1/2	C, N, R	H, J, K, C, E	B, D	S	P, R	ANG, DAL
RN^70@1183%&	118,000	1/2	C, N, R	H, J, K, C, E	B, D, F	S	P, R	ANG, DAL
RN^70@1203%&	120,000	1/2	C, N, R	H, J, K, C, E	B, D	S	P, R	ANG, DAL
RN^70@1213%&	121,000	1/2	C, N, R	H, J, K, C, E	B, D, F	S	P, R	ANG, DAL
RN^70@1233%&	123,000	1/2	C, N, R	H, J, K, C, E	B, D	S	P, R	ANG, DAL
RN^70@1243%&	124,000	1/2	C, N, R	H, J, K, C, E	B, D, F	S	P, R	ANG, DAL
RN^70@1263%&	126,000	1/2	C, N, R	H, J, K, C, E	B, D	S	P, R	ANG, DAL
RN^70@1273%&	127,000	1/2	C, N, R	H, J, K, C, E	B, D, F	S	P, R	ANG, DAL
RN^70@1293%&	129,000	1/2	C, N, R	H, J, K, C, E	B, D	S	P, R	ANG, DAL
RN^70@1303%&	130,000	1/2	C, N, R	H, J, K, C, E	B, D, F	S	P, R	ANG, DAL
RN^70@1323%&	132,000	1/2	C, N, R	H, J, K, C, E	B, D	S	P, R	ANG, DAL
RN^70@1333%&	133,000	1/2	C, N, R	H, J, K, C, E	B, D, F	S	P, R	ANG, DAL
RN^70@1353%&	135,000	1/2	C, N, R	H, J, K, C, E	B, D	S	P, R	ANG, DAL
RN^70@1373%&	137,000	1/2	C, N, R	H, J, K, C, E	B, D, F	S	P, R	ANG, DAL
RN^70@1383%&	138,000	1/2	C, N, R	H, J, K, C, E	B, D	S	P, R	ANG, DAL
RN^70@1403%&	140,000	1/2	C, N, R	H, J, K, C, E	B, D, F	S	P, R	ANG, DAL
RN^70@1423%&	142,000	1/2	C, N, R	H, J, K, C, E	B, D	S	P, R	ANG, DAL
RN^70@1433%&	143,000	1/2	C, N, R	H, J, K, C, E	B, D, F	S	P, R	ANG, DAL
RN^70@1453%&	145,000	1/2	C, N, R	H, J, K, C, E	B, D	S	P, R	ANG, DAL
RN^70@1473%&	147,000	1/2	C, N, R	H, J, K, C, E	B, D, F	S	P, R	ANG, DAL
RN^70@1493%&	149,000	1/2	C, N, R	H, J, K, C, E	B, D	S	P, R	ANG, DAL
RN^70@1503%&	150,000	1/2	C, N, R	H, J, K, C, E	B, D, F	S	P, R	ANG, DAL
RN^70@1523%&	152,000	1/2	C, N, R	H, J, K, C, E	B, D	S	P, R	ANG, DAL
RN^70@1543%&	154,000	1/2	C, N, R	H, J, K, C, E	B, D, F	S	P, R	ANG, DAL
RN^70@1563%&	156,000	1/2	C, N, R	H, J, K, C, E	B, D	S	P, R	ANG, DAL
RN^70@1583%&	158,000	1/2	C, N, R	H, J, K, C, E	B, D, F	S	P, R	ANG, DAL
RN^70@1603%&	160,000	1/2	C, N, R	H, J, K, C, E	B, D	S	P, R	ANG, DAL
RN^70@1623%&	162,000	1/2	C, N, R	H, J, K, C, E	B, D, F	S	P, R	ANG, DAL
RN^70@1643%&	164,000	1/2	C, N, R	H, J, K, C, E	B, D	S	P, R	ANG, DAL
RN^70@1653%&	165,000	1/2	C, N, R	H, J, K, C, E	B, D, F	S	P, R	ANG, DAL
RN^70@1673%&	167,000	1/2	C, N, R	H, J, K, C, E	B, D	S	P, R	ANG, DAL
RN^70@1693%&	169,000	1/2	C, N, R	H, J, K, C, E	B, D, F	S	P, R	ANG, DAL
RN^70@1723%&	172,000	1/2	C, N, R	H, J, K, C, E	B, D	S	P, R	ANG, DAL
RN^70@1743%&	174,000	1/2	C, N, R	H, J, K, C, E	B, D, F	S	P, R	ANG, DAL
RN^70@1763%&	176,000	1/2	C, N, R	H, J, K, C, E	B, D	S	P, R	ANG, DAL
RN^70@1783%&	178,000	1/2	C, N, R	H, J, K, C, E	B, D, F	S	P, R	ANG, DAL
RN^70@1803%&	180,000	1/2	C, N, R	H, J, K, C, E	B, D	S	P, R	ANG, DAL
RN^70@1823%&	182,000	1/2	C, N, R	H, J, K, C, E	B, D, F	S	P, R	ANG, DAL

RN^70@1843%&	184,000	1/2	C, N, R	H, J, K, C, E	B, D	S	P, R	ANG, DAL
RN^70@1873%&	187,000	1/2	C, N, R	H, J, K, C, E	B, D, F	S	P, R	ANG, DAL
RN^70@1893%&	189,000	1/2	C, N, R	H, J, K, C, E	B, D	S	P, R	ANG, DAL
RN^70@1913%&	191,000	1/2	C, N, R	H, J, K, C, E	B, D, F	S	P, R	ANG, DAL
RN^70@1933%&	193,000	1/2	C, N, R	H, J, K, C, E	B, D	S	P, R	ANG, DAL
RN^70@1963%&	196,000	1/2	C, N, R	H, J, K, C, E	B, D, F	S	P, R	ANG, DAL
RN^70@1983%&	198,000	1/2	C, N, R	H, J, K, C, E	B, D	S	P, R	ANG, DAL
RN^70@2003%&	200,000	1/2	C, N, R	H, J, K, C, E	B, D, F	S	P, R	ANG, DAL
RN^70@2033%&	203,000	1/2	C, N, R	H, J, K, C, E	B, D	S	P, R	ANG, DAL
RN^70@2053%&	205,000	1/2	C, N, R	H, J, K, C, E	B, D, F	S	P, R	ANG, DAL
RN^70@2083%&	208,000	1/2	C, N, R	H, J, K, C, E	B, D	S	P, R	ANG, DAL
RN^70@2103%&	210,000	1/2	C, N, R	H, J, K, C, E	B, D, F	S	P, R	ANG, DAL
RN^70@2133%&	213,000	1/2	C, N, R	H, J, K, C, E	B, D	S	P, R	ANG, DAL
RN^70@2153%&	215,000	1/2	C, N, R	H, J, K, C, E	B, D, F	S	P, R	ANG, DAL
RN^70@2183%&	218,000	1/2	C, N, R	H, J, K, C, E	B, D	S	P, R	ANG, DAL
RN^70@2213%&	221,000	1/2	C, N, R	H, J, K, C, E	B, D, F	S	P, R	ANG, DAL
RN^70@2233%&	223,000	1/2	C, N, R	H, J, K, C, E	B, D	S	P, R	ANG, DAL
RN^70@2263%&	226,000	1/2	C, N, R	H, J, K, C, E	B, D, F	S	P, R	ANG, DAL
RN^70@2293%&	229,000	1/2	C, N, R	H, J, K, C, E	B, D	S	P, R	ANG, DAL
RN^70@2323%&	232,000	1/2	C, N, R	H, J, K, C, E	B, D, F	S	P, R	ANG, DAL
RN^70@2343%&	234,000	1/2	C, N, R	H, J, K, C, E	B, D	S	P, R	ANG, DAL
RN^70@2373%&	237,000	1/2	C, N, R	H, J, K, C, E	B, D, F	S	P, R	ANG, DAL
RN^70@2403%&	240,000	1/2	C, N, R	H, J, K, C, E	B, D	S	P, R	ANG, DAL
RN^70@2433%&	243,000	1/2	C, N, R	H, J, K, C, E	B, D, F	S	P, R	ANG, DAL
RN^70@2463%&	246,000	1/2	C, N, R	H, J, K, C, E	B, D	S	P, R	ANG, DAL
RN^70@2493%&	249,000	1/2	C, N, R	H, J, K, C, E	B, D, F	S	P, R	ANG, DAL
RN^70@2523%&	252,000	1/2	C, N, R	H, J, K, C, E	B, D	S	P, R	ANG, DAL
RN^70@2553%&	255,000	1/2	C, N, R	H, J, K, C, E	B, D, F	S	P, R	ANG, DAL
RN^70@2583%&	258,000	1/2	C, N, R	H, J, K, C, E	B, D	S	P, R	ANG, DAL
RN^70@2613%&	261,000	1/2	C, N, R	H, J, K, C, E	B, D, F	S	P, R	ANG, DAL
RN^70@2643%&	264,000	1/2	C, N, R	H, J, K, C, E	B, D	S	P, R	ANG, DAL
RN^70@2673%&	267,000	1/2	C, N, R	H, J, K, C, E	B, D, F	S	P, R	ANG, DAL
RN^70@2713%&	271,000	1/2	C, N, R	H, J, K, C, E	B, D	S	P, R	ANG, DAL
RN^70@2743%&	274,000	1/2	C, N, R	H, J, K, C, E	B, D, F	S	P, R	ANG, DAL
RN^70@2773%&	277,000	1/2	C, N, R	H, J, K, C, E	B, D	S	P, R	ANG, DAL
RN^70@2803%&	280,000	1/2	C, N, R	H, J, K, C, E	B, D, F	S	P, R	ANG, DAL
RN^70@2843%&	284,000	1/2	C, N, R	H, J, K, C, E	B, D	S	P, R	ANG, DAL
RN^70@2873%&	287,000	1/2	C, N, R	H, J, K, C, E	B, D, F	S	P, R	ANG, DAL
RN^70@2913%&	291,000	1/2	C, N, R	H, J, K, C, E	B, D	S	P, R	ANG, DAL
RN^70@2943%&	294,000	1/2	C, N, R	H, J, K, C, E	B, D, F	S	P, R	ANG, DAL
RN^70@2983%&	298,000	1/2	C, N, R	H, J, K, C, E	B, D	S	P, R	ANG, DAL
RN^70@3013%&	301,000	1/2	C, N, R	H, J, K, C, E	B, D, F	S	P, R	ANG, DAL
RN^70@3053%&	305,000	1/2	C, N, R	H, J, K, C, E	B, D	S	P, R	ANG, DAL
RN^70@3093%&	309,000	1/2	C, N, R	H, J, K, C, E	B, D, F	S	P, R	ANG, DAL
RN^70@3123%&	312,000	1/2	C, N, R	H, J, K, C, E	B, D	S	P, R	ANG, DAL
RN^70@3163%&	316,000	1/2	C, N, R	H, J, K, C, E	B, D, F	S	P, R	ANG, DAL
RN^70@3203%&	320,000	1/2	C, N, R	H, J, K, C, E	B, D	S	P, R	ANG, DAL

RN^70@3243%&	324,000	1/2	C, N, R	H, J, K, C, E	B, D, F	S	P, R	ANG, DAL
RN^70@3283%&	328,000	1/2	C, N, R	H, J, K, C, E	B, D	S	P, R	ANG, DAL
RN^70@3323%&	332,000	1/2	C, N, R	H, J, K, C, E	B, D, F	S	P, R	ANG, DAL
RN^70@3363%&	336,000	1/2	C, N, R	H, J, K, C, E	B, D	S	P, R	ANG, DAL
RN^70@3403%&	340,000	1/2	C, N, R	H, J, K, C, E	B, D, F	S	P, R	ANG, DAL
RN^70@3443%&	344,000	1/2	C, N, R	H, J, K, C, E	B, D	S	P, R	ANG, DAL
RN^70@3483%&	348,000	1/2	C, N, R	H, J, K, C, E	B, D, F	S	P, R	ANG, DAL
RN^70@3523%&	352,000	1/2	C, N, R	H, J, K, C, E	B, D	S	P, R	ANG, DAL
RN^70@3573%&	357,000	1/2	C, N, R	H, J, K, C, E	B, D, F	S	P, R	ANG, DAL
RN^70@3613%&	361,000	1/2	C, N, R	H, J, K, C, E	B, D	S	P, R	ANG, DAL
RN^70@3653%&	365,000	1/2	C, N, R	H, J, K, C, E	B, D, F	S	P, R	ANG, DAL
RN^70@3703%&	370,000	1/2	C, N, R	H, J, K, C, E	B, D	S	P, R	ANG, DAL
RN^70@3743%&	374,000	1/2	C, N, R	H, J, K, C, E	B, D, F	S	P, R	ANG, DAL
RN^70@3793%&	379,000	1/2	C, N, R	H, J, K, C, E	B, D	S	P, R	ANG, DAL
RN^70@3833%&	383,000	1/2	C, N, R	H, J, K, C, E	B, D, F	S	P, R	ANG, DAL
RN^70@3883%&	388,000	1/2	C, N, R	H, J, K, C, E	B, D	S	P, R	ANG, DAL
RN^70@3923%&	392,000	1/2	C, N, R	H, J, K, C, E	B, D, F	S	P, R	ANG, DAL
RN^70@3973%&	397,000	1/2	C, N, R	H, J, K, C, E	B, D	S	P, R	ANG, DAL
RN^70@4023%&	402,000	1/2	C, N, R	H, J, K, C, E	B, D, F	S	P, R	ANG, DAL
RN^70@4073%&	407,000	1/2	C, N, R	H, J, K, C, E	B, D	S	P, R	ANG, DAL
RN^70@4123%&	412,000	1/2	C, N, R	H, J, K, C, E	B, D, F	S	P, R	ANG, DAL
RN^70@4173%&	417,000	1/2	C, N, R	H, J, K, C, E	B, D	S	P, R	ANG, DAL
RN^70@4223%&	422,000	1/2	C, N, R	H, J, K, C, E	B, D, F	S	P, R	ANG, DAL
RN^70@4273%&	427,000	1/2	C, N, R	H, J, K, C, E	B, D	S	P, R	ANG, DAL
RN^70@4323%&	432,000	1/2	C, N, R	H, J, K, C, E	B, D, F	S	P, R	ANG, DAL
RN^70@4373%&	437,000	1/2	C, N, R	H, J, K, C, E	B, D	S	P, R	ANG, DAL
RN^70@4423%&	442,000	1/2	C, N, R	H, J, K, C, E	B, D, F	S	P, R	ANG, DAL
RN^70@4483%&	448,000	1/2	C, N, R	H, J, K, C, E	B, D	S	P, R	ANG, DAL
RN^70@4533%&	453,000	1/2	C, N, R	H, J, K, C, E	B, D, F	S	P, R	ANG, DAL
RN^70@4593%&	459,000	1/2	C, N, R	H, J, K, C, E	B, D	S	P, R	ANG, DAL
RN^70@4643%&	464,000	1/2	C, N, R	H, J, K, C, E	B, D, F	S	P, R	ANG, DAL
RN^70@4703%&	470,000	1/2	C, N, R	H, J, K, C, E	B, D	S	P, R	ANG, DAL
RN^70@4753%&	475,000	1/2	C, N, R	H, J, K, C, E	B, D, F	S	P, R	ANG, DAL
RN^70@4813%&	481,000	1/2	C, N, R	H, J, K, C, E	B, D	S	P, R	ANG, DAL
RN^70@4873%&	487,000	1/2	C, N, R	H, J, K, C, E	B, D, F	S	P, R	ANG, DAL
RN^70@4933%&	493,000	1/2	C, N, R	H, J, K, C, E	B, D	S	P, R	ANG, DAL
RN^70@4993%&	499,000	1/2	C, N, R	H, J, K, C, E	B, D, F	S	P, R	ANG, DAL
RN^70@5053%&	505,000	1/2	C, N, R	H, J, K, C, E	B, D	S	P, R	ANG, DAL
RN^70@5113%&	511,000	1/2	C, N, R	H, J, K, C, E	B, D, F	S	P, R	ANG, DAL
RN^70@5173%&	517,000	1/2	C, N, R	H, J, K, C, E	B, D	S	P, R	ANG, DAL
RN^70@5233%&	523,000	1/2	C, N, R	H, J, K, C, E	B, D, F	S	P, R	ANG, DAL
RN^70@5303%&	530,000	1/2	C, N, R	H, J, K, C, E	B, D	S	P, R	ANG, DAL
RN^70@5363%&	536,000	1/2	C, N, R	H, J, K, C, E	B, D, F	S	P, R	ANG, DAL
RN^70@5423%&	542,000	1/2	C, N, R	H, J, K, C, E	B, D	S	P, R	ANG, DAL
RN^70@5493%&	549,000	1/2	C, N, R	H, J, K, C, E	B, D, F	S	P, R	ANG, DAL
RN^70@5563%&	556,000	1/2	C, N, R	H, J, K, C, E	B, D	S	P, R	ANG, DAL
RN^70@5623%&	562,000	1/2	C, N, R	H, J, K, C, E	B, D, F	S	P, R	ANG, DAL

RN^70@5693%&	569,000	1/2	C, N, R	H, J, K, C, E	B, D	S	P, R	ANG, DAL
RN^70@5763%&	576,000	1/2	C, N, R	H, J, K, C, E	B, D, F	S	P, R	ANG, DAL
RN^70@5833%&	583,000	1/2	C, N, R	H, J, K, C, E	B, D	S	P, R	ANG, DAL
RN^70@5903%&	590,000	1/2	C, N, R	H, J, K, C, E	B, D, F	S	P, R	ANG, DAL
RN^70@5973%&	597,000	1/2	C, N, R	H, J, K, C, E	B, D	S	P, R	ANG, DAL
RN^70@6043%&	604,000	1/2	C, N, R	H, J, K, C, E	B, D, F	S	P, R	ANG, DAL
RN^70@6123%&	612,000	1/2	C, N, R	H, J, K, C, E	B, D	S	P, R	ANG, DAL
RN^70@6193%&	619,000	1/2	C, N, R	H, J, K, C, E	B, D, F	S	P, R	ANG, DAL
RN^70@6263%&	626,000	1/2	C, N, R	H, J, K, C, E	B, D	S	P, R	ANG, DAL
RN^70@6343%&	634,000	1/2	C, N, R	H, J, K, C, E	B, D, F	S	P, R	ANG, DAL
RN^70@6423%&	642,000	1/2	C, N, R	H, J, K, C, E	B, D	S	P, R	ANG, DAL
RN^70@6493%&	649,000	1/2	C, N, R	H, J, K, C, E	B, D, F	S	P, R	ANG, DAL
RN^70@6573%&	657,000	1/2	C, N, R	H, J, K, C, E	B, D	S	P, R	ANG, DAL
RN^70@6653%&	665,000	1/2	C, N, R	H, J, K, C, E	B, D, F	S	P, R	ANG, DAL
RN^70@6733%&	673,000	1/2	C, N, R	H, J, K, C, E	B, D	S	P, R	ANG, DAL
RN^70@6813%&	681,000	1/2	C, N, R	H, J, K, C, E	B, D, F	S	P, R	ANG, DAL
RN^70@6903%&	690,000	1/2	C, N, R	H, J, K, C, E	B, D	S	P, R	ANG, DAL
RN^70@6983%&	698,000	1/2	C, N, R	H, J, K, C, E	B, D, F	S	P, R	ANG, DAL
RN^70@7063%&	706,000	1/2	C, N, R	H, J, K, C, E	B, D	S	P, R	ANG, DAL
RN^70@7153%&	715,000	1/2	C, N, R	H, J, K, C, E	B, D, F	S	P, R	ANG, DAL
RN^70@7233%&	723,000	1/2	C, N, R	H, J, K, C, E	B, D	S	P, R	ANG, DAL
RN^70@7323%&	732,000	1/2	C, N, R	H, J, K, C, E	B, D, F	S	P, R	ANG, DAL
RN^70@7413%&	741,000	1/2	C, N, R	H, J, K, C, E	B, D	S	P, R	ANG, DAL
RN^70@7503%&	750,000	1/2	C, N, R	H, J, K, C, E	B, D, F	S	P, R	ANG, DAL
RN^70@7593%&	759,000	1/2	C, N, R	H, J, K, C, E	B, D	S	P, R	ANG, DAL
RN^70@7683%&	768,000	1/2	C, N, R	H, J, K, C, E	B, D, F	S	P, R	ANG, DAL
RN^70@7773%&	777,000	1/2	C, N, R	H, J, K, C, E	B, D	S	P, R	ANG, DAL
RN^70@7873%&	787,000	1/2	C, N, R	H, J, K, C, E	B, D, F	S	P, R	ANG, DAL
RN^70@7963%&	796,000	1/2	C, N, R	H, J, K, C, E	B, D	S	P, R	ANG, DAL
RN^70@8063%&	806,000	1/2	C, N, R	H, J, K, C, E	B, D, F	S	P, R	ANG, DAL
RN^70@8163%&	816,000	1/2	C, N, R	H, J, K, C, E	B, D	S	P, R	ANG, DAL
RN^70@8253%&	825,000	1/2	C, N, R	H, J, K, C, E	B, D, F	S	P, R	ANG, DAL
RN^70@8353%&	835,000	1/2	C, N, R	H, J, K, C, E	B, D	S	P, R	ANG, DAL
RN^70@8453%&	845,000	1/2	C, N, R	H, J, K, C, E	B, D, F	S	P, R	ANG, DAL
RN^70@8563%&	856,000	1/2	C, N, R	H, J, K, C, E	B, D	S	P, R	ANG, DAL
RN^70@8663%&	866,000	1/2	C, N, R	H, J, K, C, E	B, D, F	S	P, R	ANG, DAL
RN^70@8763%&	876,000	1/2	C, N, R	H, J, K, C, E	B, D	S	P, R	ANG, DAL
RN^70@8873%&	887,000	1/2	C, N, R	H, J, K, C, E	B, D, F	S	P, R	ANG, DAL
RN^70@8983%&	898,000	1/2	C, N, R	H, J, K, C, E	B, D	S	P, R	ANG, DAL
RN^70@9093%&	909,000	1/2	C, N, R	H, J, K, C, E	B, D, F	S	P, R	ANG, DAL
RN^70@9203%&	920,000	1/2	C, N, R	H, J, K, C, E	B, D	S	P, R	ANG, DAL
RN^70@9313%&	931,000	1/2	C, N, R	H, J, K, C, E	B, D, F	S	P, R	ANG, DAL
RN^70@9423%&	942,000	1/2	C, N, R	H, J, K, C, E	B, D	S	P, R	ANG, DAL
RN^70@9533%&	953,000	1/2	C, N, R	H, J, K, C, E	B, D, F	S	P, R	ANG, DAL
RN^70@9653%&	965,000	1/2	C, N, R	H, J, K, C, E	B, D	S	P, R	ANG, DAL
RN^70@9763%&	976,000	1/2	C, N, R	H, J, K, C, E	B, D, F	S	P, R	ANG, DAL
RN^70@9883%&	988,000	1/2	C, N, R	H, J, K, C, E	B, D	S	P, R	ANG, DAL

RN^70@1004%&	1,000,000	1/2	C, N, R	H, J, K, C, E	B, D, F	S	P, R	ANG, DAL
RN^70@1014%&	1,010,000	1/2	C, N, R	H, J, K, C, E	B, D	S	P, R	ANG, DAL
RN^70@1024%&	1,020,000	1/2	C, N, R	H, J, K, C, E	B, D, F	S	P, R	ANG, DAL
RN^70@1044%&	1,040,000	1/2	C, N, R	H, J, K, C, E	B, D	S	P, R	ANG, DAL
RN^70@1054%&	1,050,000	1/2	C, N, R	H, J, K, C, E	B, D, F	S	P, R	ANG, DAL
RN^70@1064%&	1,060,000	1/2	C, N, R	H, J, K, C, E	B, D	S	P, R	ANG, DAL
RN^70@1074%&	1,070,000	1/2	C, N, R	H, J, K, C, E	B, D, F	S	P, R	ANG, DAL
RN^70@1094%&	1,090,000	1/2	C, N, R	H, J, K, C, E	B, D	S	P, R	ANG, DAL
RN^70@1104%&	1,100,000	1/2	C, N, R	H, J, K, C, E	B, D, F	S	P, R	ANG, DAL
RN^70@1114%&	1,110,000	1/2	C, N, R	H, J, K, C, E	B, D	S	P, R	ANG, DAL
RN^70@1134%&	1,130,000	1/2	C, N, R	H, J, K, C, E	B, D, F	S	P, R	ANG, DAL
RN^70@1144%&	1,140,000	1/2	C, N, R	H, J, K, C, E	B, D	S	P, R	ANG, DAL
RN^70@1154%&	1,150,000	1/2	C, N, R	H, J, K, C, E	B, D, F	S	P, R	ANG, DAL
RN^70@1174%&	1,170,000	1/2	C, N, R	H, J, K, C, E	B, D	S	P, R	ANG, DAL
RN^70@1184%&	1,180,000	1/2	C, N, R	H, J, K, C, E	B, D, F	S	P, R	ANG, DAL
RN^70@1204%&	1,200,000	1/2	C, N, R	H, J, K, C, E	B, D	S	P, R	ANG, DAL
RN^70@1214%&	1,210,000	1/2	C, N, R	H, J, K, C, E	B, D, F	S	P, R	ANG, DAL
RN^70@1234%&	1,230,000	1/2	C, N, R	H, J, K, C, E	B, D	S	P, R	ANG, DAL
RN^70@1244%&	1,240,000	1/2	C, N, R	H, J, K, C, E	B, D, F	S	P, R	ANG, DAL
RN^70@1264%&	1,260,000	1/2	C, N, R	H, J, K, C, E	B, D	S	P, R	ANG, DAL
RN^70@1274%&	1,270,000	1/2	C, N, R	H, J, K, C, E	B, D, F	S	P, R	ANG, DAL
RN^70@1294%&	1,290,000	1/2	C, N, R	H, J, K, C, E	B, D	S	P, R	ANG, DAL
RN^70@1304%&	1,300,000	1/2	C, N, R	H, J, K, C, E	B, D, F	S	P, R	ANG, DAL
RN^70@1324%&	1,320,000	1/2	C, N, R	H, J, K, C, E	B, D	S	P, R	ANG, DAL
RN^70@1334%&	1,330,000	1/2	C, N, R	H, J, K, C, E	B, D, F	S	P, R	ANG, DAL
RN^70@1354%&	1,350,000	1/2	C, N, R	H, J, K, C, E	B, D	S	P, R	ANG, DAL
RN^70@1374%&	1,370,000	1/2	C, N, R	H, J, K, C, E	B, D, F	S	P, R	ANG, DAL
RN^70@1384%&	1,380,000	1/2	C, N, R	H, J, K, C, E	B, D	S	P, R	ANG, DAL
RN^70@1404%&	1,400,000	1/2	C, N, R	H, J, K, C, E	B, D, F	S	P, R	ANG, DAL
RN^70@1424%&	1,420,000	1/2	C, N, R	H, J, K, C, E	B, D	S	P, R	ANG, DAL
RN^70@1434%&	1,430,000	1/2	C, N, R	H, J, K, C, E	B, D, F	S	P, R	ANG, DAL
RN^70@1454%&	1,450,000	1/2	C, N, R	H, J, K, C, E	B, D	S	P, R	ANG, DAL
RN^70@1474%&	1,470,000	1/2	C, N, R	H, J, K, C, E	B, D, F	S	P, R	ANG, DAL
RN^70@1494%&	1,490,000	1/2	C, N, R	H, J, K, C, E	B, D	S	P, R	ANG, DAL
RN^70@1504%&	1,500,000	1/2	C, N, R	H, J, K, C, E	B, D, F	S	P, R	ANG, DAL
RN^70@1524%&	1,520,000	1/2	C, N, R	H, J, K, C, E	B, D	S	P, R	ANG, DAL
RN^70@1544%&	1,540,000	1/2	C, N, R	H, J, K, C, E	B, D, F	S	P, R	ANG, DAL
RN^70@1564%&	1,560,000	1/2	C, N, R	H, J, K, C, E	B, D	S	P, R	ANG, DAL
RN^70@1584%&	1,580,000	1/2	C, N, R	H, J, K, C, E	B, D, F	S	P, R	ANG, DAL
RN^70@1604%&	1,600,000	1/2	C, N, R	H, J, K, C, E	B, D	S	P, R	ANG, DAL
RN^70@1624%&	1,620,000	1/2	C, N, R	H, J, K, C, E	B, D, F	S	P, R	ANG, DAL
RN^70@1644%&	1,640,000	1/2	C, N, R	H, J, K, C, E	B, D	S	P, R	ANG, DAL
RN^70@1654%&	1,650,000	1/2	C, N, R	H, J, K, C, E	B, D, F	S	P, R	ANG, DAL
RN^70@1674%&	1,670,000	1/2	C, N, R	H, J, K, C, E	B, D	S	P, R	ANG, DAL
RN^70@1694%&	1,690,000	1/2	C, N, R	H, J, K, C, E	B, D, F	S	P, R	ANG, DAL
RN^70@1724%&	1,720,000	1/2	C, N, R	H, J, K, C, E	B, D	S	P, R	ANG, DAL
RN^70@1744%&	1,740,000	1/2	C, N, R	H, J, K, C, E	B, D, F	S	P, R	ANG, DAL

RN^70@1764%&	1,760,000	1/2	C, N, R	H, J, K, C, E	B, D	S	P, R	ANG, DAL
RN^70@1784%&	1,780,000	1/2	C, N, R	H, J, K, C, E	B, D, F	S	P, R	ANG, DAL
RN^70@1804%&	1,800,000	1/2	C, N, R	H, J, K, C, E	B, D	S	P, R	ANG, DAL
RN^70@1824%&	1,820,000	1/2	C, N, R	H, J, K, C, E	B, D, F	S	P, R	ANG, DAL
RN^70@1844%&	1,840,000	1/2	C, N, R	H, J, K, C, E	B, D	S	P, R	ANG, DAL
RN^70@1874%&	1,870,000	1/2	C, N, R	H, J, K, C, E	B, D, F	S	P, R	ANG, DAL
RN^70@1894%&	1,890,000	1/2	C, N, R	H, J, K, C, E	B, D	S	P, R	ANG, DAL
RN^70@1914%&	1,910,000	1/2	C, N, R	H, J, K, C, E	B, D, F	S	P, R	ANG, DAL
RN^70@1934%&	1,930,000	1/2	C, N, R	H, J, K, C, E	B, D	S	P, R	ANG, DAL
RN^70@1964%&	1,960,000	1/2	C, N, R	H, J, K, C, E	B, D, F	S	P, R	ANG, DAL
RN^70@1984%&	1,980,000	1/2	C, N, R	H, J, K, C, E	B, D	S	P, R	ANG, DAL
RN^70@2004%&	2,000,000	1/2	C, N, R	H, J, K, C, E	B, D, F	S	P, R	ANG, DAL
RN^70@2034%&	2,030,000	1/2	C, N, R	H, J, K, C, E	B, D	S	P, R	ANG, DAL
RN^70@2054%&	2,050,000	1/2	C, N, R	H, J, K, C, E	B, D, F	S	P, R	ANG, DAL
RN^70@2084%&	2,080,000	1/2	C, N, R	H, J, K, C, E	B, D	S	P, R	ANG, DAL
RN^70@2104%&	2,100,000	1/2	C, N, R	H, J, K, C, E	B, D, F	S	P, R	ANG, DAL
RN^70@2134%&	2,130,000	1/2	C, N, R	H, J, K, C, E	B, D	S	P, R	ANG, DAL
RN^70@2154%&	2,150,000	1/2	C, N, R	H, J, K, C, E	B, D, F	S	P, R	ANG, DAL
RN^70@2184%&	2,180,000	1/2	C, N, R	H, J, K, C, E	B, D	S	P, R	ANG, DAL
RN^70@2214%&	2,210,000	1/2	C, N, R	H, J, K, C, E	B, D, F	S	P, R	ANG, DAL
RN^70@2234%&	2,230,000	1/2	C, N, R	H, J, K, C, E	B, D	S	P, R	ANG, DAL
RN^70@2264%&	2,260,000	1/2	C, N, R	H, J, K, C, E	B, D, F	S	P, R	ANG, DAL
RN^70@2294%&	2,290,000	1/2	C, N, R	H, J, K, C, E	B, D	S	P, R	ANG, DAL
RN^70@2324%&	2,320,000	1/2	C, N, R	H, J, K, C, E	B, D, F	S	P, R	ANG, DAL
RN^70@2344%&	2,340,000	1/2	C, N, R	H, J, K, C, E	B, D	S	P, R	ANG, DAL
RN^70@2374%&	2,370,000	1/2	C, N, R	H, J, K, C, E	B, D, F	S	P, R	ANG, DAL
RN^70@2404%&	2,400,000	1/2	C, N, R	H, J, K, C, E	B, D	S	P, R	ANG, DAL
RN^70@2434%&	2,430,000	1/2	C, N, R	H, J, K, C, E	B, D, F	S	P, R	ANG, DAL
RN^70@2464%&	2,460,000	1/2	C, N, R	H, J, K, C, E	B, D	S	P, R	ANG, DAL
RN^70@2494%&	2,490,000	1/2	C, N, R	H, J, K, C, E	B, D, F	S	P, R	ANG, DAL
RN^70@2524%&	2,520,000	1/2	C, N, R	H, J, K, C, E	B, D	S	P, R	ANG, DAL
RN^70@2554%&	2,550,000	1/2	C, N, R	H, J, K, C, E	B, D, F	S	P, R	ANG, DAL
RN^70@2584%&	2,580,000	1/2	C, N, R	H, J, K, C, E	B, D	S	P, R	ANG, DAL
RN^70@2614%&	2,610,000	1/2	C, N, R	H, J, K, C, E	B, D, F	S	P, R	ANG, DAL
RN^70@2644%&	2,640,000	1/2	C, N, R	H, J, K, C, E	B, D	S	P, R	ANG, DAL
RN^70@2674%&	2,670,000	1/2	C, N, R	H, J, K, C, E	B, D, F	S	P, R	ANG, DAL
RN^70@2714%&	2,710,000	1/2	C, N, R	H, J, K, C, E	B, D	S	P, R	ANG, DAL
RN^70@2744%&	2,740,000	1/2	C, N, R	H, J, K, C, E	B, D, F	S	P, R	ANG, DAL
RN^70@2774%&	2,770,000	1/2	C, N, R	H, J, K, C, E	B, D	S	P, R	ANG, DAL
RN^70@2804%&	2,800,000	1/2	C, N, R	H, J, K, C, E	B, D, F	S	P, R	ANG, DAL
RN^70@2844%&	2,840,000	1/2	C, N, R	H, J, K, C, E	B, D	S	P, R	ANG, DAL
RN^70@2874%&	2,870,000	1/2	C, N, R	H, J, K, C, E	B, D, F	S	P, R	ANG, DAL
RN^70@2914%&	2,910,000	1/2	C, N, R	H, J, K, C, E	B, D	S	P, R	ANG, DAL
RN^70@2944%&	2,940,000	1/2	C, N, R	H, J, K, C, E	B, D, F	S	P, R	ANG, DAL
RN^70@2984%&	2,980,000	1/2	C, N, R	H, J, K, C, E	B, D	S	P, R	ANG, DAL
RN^70@3014%&	3,010,000	1/2	C, N, R	H, J, K, C, E	B, D, F	S	P, R	ANG, DAL
RN^70@3054%&	3,050,000	1/2	N, R	C, E	B, D	S	P, R	ANG

RN^70@3094%&	3,090,000	1/2	N, R	C, E	B, D, F	S	P, R	ANG
RN^70@3124%&	3,120,000	1/2	N, R	C, E	B, D	S	P, R	ANG
RN^70@3164%&	3,160,000	1/2	N, R	C, E	B, D, F	S	P, R	ANG
RN^70@3204%&	3,200,000	1/2	N, R	C, E	B, D	S	P, R	ANG
RN^70@3244%&	3,240,000	1/2	N, R	C, E	B, D, F	S	P, R	ANG
RN^70@3284%&	3,280,000	1/2	N, R	C, E	B, D	S	P, R	ANG
RN^70@3324%&	3,320,000	1/2	N, R	C, E	B, D, F	S	P, R	ANG
RN^70@3364%&	3,360,000	1/2	N, R	C, E	B, D	S	P, R	ANG
RN^70@3404%&	3,400,000	1/2	N, R	C, E	B, D, F	S	P, R	ANG
RN^70@3444%&	3,440,000	1/2	N, R	C, E	B, D	S	P, R	ANG
RN^70@3484%&	3,480,000	1/2	N, R	C, E	B, D, F	S	P, R	ANG
RN^70@3524%&	3,520,000	1/2	N, R	C, E	B, D	S	P, R	ANG
RN^70@3574%&	3,570,000	1/2	N, R	C, E	B, D, F	S	P, R	ANG
RN^70@3614%&	3,610,000	1/2	N, R	C, E	B, D	S	P, R	ANG
RN^70@3654%&	3,650,000	1/2	N, R	C, E	B, D, F	S	P, R	ANG
RN^70@3704%&	3,700,000	1/2	N, R	C, E	B, D	S	P, R	ANG
RN^70@3744%&	3,740,000	1/2	N, R	C, E	B, D, F	S	P, R	ANG
RN^70@3794%&	3,790,000	1/2	N, R	C, E	B, D	S	P, R	ANG
RN^70@3834%&	3,830,000	1/2	N, R	C, E	B, D, F	S	P, R	ANG
RN^70@3884%&	3,880,000	1/2	N, R	C, E	B, D	S	P, R	ANG
RN^70@3924%&	3,920,000	1/2	N, R	C, E	B, D, F	S	P, R	ANG
RN^70@3974%&	3,970,000	1/2	N, R	C, E	B, D	S	P, R	ANG
RN^70@4024%&	4,020,000	1/2	N, R	C, E	B, D, F	S	P, R	ANG
RN^70@4074%&	4,070,000	1/2	N, R	C, E	B, D	S	P, R	ANG
RN^70@4124%&	4,120,000	1/2	N, R	C, E	B, D, F	S	P, R	ANG
RN^70@4174%&	4,170,000	1/2	N, R	C, E	B, D	S	P, R	ANG
RN^70@4224%&	4,220,000	1/2	N, R	C, E	B, D, F	S	P, R	ANG
RN^70@4274%&	4,270,000	1/2	N, R	C, E	B, D	S	P, R	ANG
RN^70@4324%&	4,320,000	1/2	N, R	C, E	B, D, F	S	P, R	ANG
RN^70@4374%&	4,370,000	1/2	N, R	C, E	B, D	S	P, R	ANG
RN^70@4424%&	4,420,000	1/2	N, R	C, E	B, D, F	S	P, R	ANG
RN^70@4484%&	4,480,000	1/2	N, R	C, E	B, D	S	P, R	ANG
RN^70@4534%&	4,530,000	1/2	N, R	C, E	B, D, F	S	P, R	ANG
RN^70@4594%&	4,590,000	1/2	N, R	C, E	B, D	S	P, R	ANG
RN^70@4644%&	4,640,000	1/2	N, R	C, E	B, D, F	S	P, R	ANG
RN^70@4704%&	4,700,000	1/2	N, R	C, E	B, D	S	P, R	ANG
RN^70@4754%&	4,750,000	1/2	N, R	C, E	B, D, F	S	P, R	ANG
RN^70@4814%&	4,810,000	1/2	N, R	C, E	B, D	S	P, R	ANG
RN^70@4874%&	4,870,000	1/2	N, R	C, E	B, D, F	S	P, R	ANG
RN^70@4934%&	4,930,000	1/2	N, R	C, E	B, D	S	P, R	ANG
RN^70@4994%&	4,990,000	1/2	N, R	C, E	B, D, F	S	P, R	ANG

RN^70 RESISTORS DECADE BREAKDOWN

Click on the link below to see the associated parts selection listing:

Resistance Range
10.0 Ohms through 98.8 Ohms
100 Ohms through 988 Ohms
1,000 Ohms through 9,880 Ohms
10,000 Ohms through 98,800 Ohms
100,000 Ohms through 988,000 Ohms
1,000,000 Ohms through 4,990,000 Ohms

RN^70 Film Resistors: 10.0 Ohms through 98.8 Ohms

	Resistance	Power	Term.	Char.	Resistance	Level 1	Level 2	
Part Number	Value (Ohms)	Rating (W)	Type (^)	(@)	Tolerance (%)	(FRL) (&)	(FRL) (&)	Manufacturer
RN^70@10R0%&	10.0	1/2	C	H, J, K	B, D, F	S	P, R	DAL
RN^70@10R1%&	10.1	1/2	C	H, J, K	B, D	S	P, R	DAL
RN^70@10R2%&	10.2	1/2	C	H, J, K	B, D, F	S	P, R	DAL
RN^70@10R4%&	10.4	1/2	C	H, J, K	B, D	S	P, R	DAL
RN^70@10R5%&	10.5	1/2	C	H, J, K	B, D, F	S	P, R	DAL
RN^70@10R6%&	10.6	1/2	C	H, J, K	B, D	S	P, R	DAL
RN^70@10R7%&	10.7	1/2	C	H, J, K	B, D, F	S	P, R	DAL
RN^70@10R9%&	10.9	1/2	C	H, J, K	B, D	S	P, R	DAL
RN^70@11R0%&	11.0	1/2	C	H, J, K	B, D, F	S	P, R	DAL
	Resistance	Power	Term.	Char.	Resistance	Level 1	Level 2	
Part Number	Value (Ohms)	Rating (W)	Type (^)	(@)	Tolerance (%)	(FRL) (&)	(FRL) (&)	Manufacturer
RN^70@11R1%&	11.1	1/2	C	H, J, K	B, D	S	P, R	DAL
RN^70@11R3%&	11.3	1/2	C	H, J, K	B, D, F	S	P, R	DAL
RN^70@11R4%&	11.4	1/2	C	H, J, K	B, D	S	P, R	DAL
RN^70@11R5%&	11.5	1/2	C	H, J, K	B, D, F	S	P, R	DAL
RN^70@11R7%&	11.7	1/2	C	H, J, K	B, D	S	P, R	DAL
RN^70@11R8%&	11.8	1/2	C	H, J, K	B, D, F	S	P, R	DAL
RN^70@12R0%&	12.0	1/2	C	H, J, K	B, D	S	P, R	DAL
RN^70@12R1%&	12.1	1/2	C	H, J, K	B, D, F	S	P, R	DAL
RN^70@12R3%&	12.3	1/2	C	H, J, K	B, D	S	P, R	DAL
	Resistance	Power	Term.	Char.	Resistance	Level 1	Level 2	
Part Number	Value (Ohms)	Rating (W)	Type (^)	(@)	Tolerance (%)	(FRL) (&)	(FRL) (&)	Manufacturer
RN^70@12R4%&	12.4	1/2	C	H, J, K	B, D, F	S	P, R	DAL
RN^70@12R6%&	12.6	1/2	C	H, J, K	B, D	S	P, R	DAL
RN^70@12R7%&	12.7	1/2	C	H, J, K	B, D, F	S	P, R	DAL
RN^70@12R9%&	12.9	1/2	C	H, J, K	B, D	S	P, R	DAL
RN^70@13R0%&	13.0	1/2	C	H, J, K	B, D, F	S	P, R	DAL
RN^70@13R2%&	13.2	1/2	C	H, J, K	B, D	S	P, R	DAL
RN^70@13R3%&	13.3	1/2	C	H, J, K	B, D, F	S	P, R	DAL
RN^70@13R5%&	13.5	1/2	C	H, J, K	B, D	S	P, R	DAL
RN^70@13R7%&	13.7	1/2	C	H, J, K	B, D, F	S	P, R	DAL
	Resistance	Power	Term.	Char.	Resistance	Level 1	Level 2	
Part Number	Value (Ohms)	Rating (W)	Type (^)	(@)	Tolerance (%)	(FRL) (&)	(FRL) (&)	Manufacturer

RN^70@13R8%&	13.8	1/2	C	H, J, K	B, D	S	P, R	DAL
RN^70@14R0%&	14.0	1/2	C	H, J, K	B, D, F	S	P, R	DAL
RN^70@14R2%&	14.2	1/2	C	H, J, K	B, D	S	P, R	DAL
RN^70@14R3%&	14.3	1/2	C	H, J, K	B, D, F	S	P, R	DAL
RN^70@14R5%&	14.5	1/2	C	H, J, K	B, D	S	P, R	DAL
RN^70@14R7%&	14.7	1/2	C	H, J, K	B, D, F	S	P, R	DAL
RN^70@14R9%&	14.9	1/2	C	H, J, K	B, D	S	P, R	DAL
RN^70@15R0%&	15.0	1/2	C	H, J, K	B, D, F	S	P, R	DAL
RN^70@15R2%&	15.2	1/2	C	H, J, K	B, D	S	P, R	DAL
	Resistance	Power	Term.	Char.	Resistance	Level 1	Level 2	
Part Number	Value (Ohms)	Rating (W)	Type (^)	(@)	Tolerance (%)	(FRL) (&)	(FRL) (&)	Manufacturer
RN^70@15R4%&	15.4	1/2	C	H, J, K	B, D, F	S	P, R	DAL
RN^70@15R6%&	15.6	1/2	C	H, J, K	B, D	S	P, R	DAL
RN^70@15R8%&	15.8	1/2	C	H, J, K	B, D, F	S	P, R	DAL
RN^70@16R0%&	16.0	1/2	C	H, J, K	B, D	S	P, R	DAL
RN^70@16R2%&	16.2	1/2	C	H, J, K	B, D, F	S	P, R	DAL
RN^70@16R4%&	16.4	1/2	C	H, J, K	B, D	S	P, R	DAL
RN^70@16R5%&	16.5	1/2	C	H, J, K	B, D, F	S	P, R	DAL
RN^70@16R7%&	16.7	1/2	C	H, J, K	B, D	S	P, R	DAL
RN^70@16R9%&	16.9	1/2	C	H, J, K	B, D, F	S	P, R	DAL
	Resistance	Power	Term.	Char.	Resistance	Level 1	Level 2	
Part Number	Value (Ohms)	Rating (W)	Type (^)	(@)	Tolerance (%)	(FRL) (&)	(FRL) (&)	Manufacturer
RN^70@17R2%&	17.2	1/2	C	H, J, K	B, D	S	P, R	DAL
RN^70@17R4%&	17.4	1/2	C	H, J, K	B, D, F	S	P, R	DAL
RN^70@17R6%&	17.6	1/2	C	H, J, K	B, D	S	P, R	DAL
RN^70@17R8%&	17.8	1/2	C	H, J, K	B, D, F	S	P, R	DAL
RN^70@18R0%&	18.0	1/2	C	H, J, K	B, D	S	P, R	DAL
RN^70@18R2%&	18.2	1/2	C	H, J, K	B, D, F	S	P, R	DAL
RN^70@18R4%&	18.4	1/2	C	H, J, K	B, D	S	P, R	DAL
RN^70@18R7%&	18.7	1/2	C	H, J, K	B, D, F	S	P, R	DAL
RN^70@18R9%&	18.9	1/2	C	H, J, K	B, D	S	P, R	DAL
	Resistance	Power	Term.	Char.	Resistance	Level 1	Level 2	
Part Number	Value (Ohms)	Rating (W)	Type (^)	(@)	Tolerance (%)	(FRL) (&)	(FRL) (&)	Manufacturer
RN^70@19R1%&	19.1	1/2	C	H, J, K	B, D, F	S	P, R	DAL
RN^70@19R3%&	19.3	1/2	C	H, J, K	B, D	S	P, R	DAL
RN^70@19R6%&	19.6	1/2	C	H, J, K	B, D, F	S	P, R	DAL
RN^70@19R8%&	19.8	1/2	C	H, J, K	B, D	S	P, R	DAL
RN^70@20R0%&	20.0	1/2	C	H, J, K	B, D, F	S	P, R	DAL
RN^70@20R3%&	20.3	1/2	C	H, J, K	B, D	S	P, R	DAL
RN^70@20R5%&	20.5	1/2	C	H, J, K	B, D, F	S	P, R	DAL
RN^70@20R8%&	20.8	1/2	C	H, J, K	B, D	S	P, R	DAL
RN^70@21R0%&	21.0	1/2	C	H, J, K	B, D, F	S	P, R	DAL
	Resistance	Power	Term.	Char.	Resistance	Level 1	Level 2	
Part Number	Value (Ohms)	Rating (W)	Type (^)	(@)	Tolerance (%)	(FRL) (&)	(FRL) (&)	Manufacturer
	Resistance	Power	Term.	Char.	Resistance	Level 1	Level 2	
Part Number	Value (Ohms)	Rating (W)	Type (^)	(@)	Tolerance (%)	(FRL) (&)	(FRL) (&)	Manufacturer
RN^70@21R3%&	21.3	1/2	C	H, J, K	B, D	S	P, R	DAL

RN^70@21R5%&	21.5	1/2	C	H, J, K	B, D, F	S	P, R	DAL
RN^70@21R8%&	21.8	1/2	C	H, J, K	B, D	S	P, R	DAL
RN^70@22R1%&	22.1	1/2	C	H, J, K	B, D, F	S	P, R	DAL
RN^70@22R3%&	22.3	1/2	C	H, J, K	B, D	S	P, R	DAL
RN^70@22R6%&	22.6	1/2	C	H, J, K	B, D, F	S	P, R	DAL
RN^70@22R9%&	22.9	1/2	C	H, J, K	B, D	S	P, R	DAL
RN^70@23R2%&	23.2	1/2	C	H, J, K	B, D, F	S	P, R	DAL
RN^70@23R4%&	23.4	1/2	C	H, J, K	B, D	S	P, R	DAL
	Resistance	Power	Term.	Char.	Resistance	Level 1	Level 2	
Part Number	Value (Ohms)	Rating (W)	Type (^)	(@)	Tolerance (%)	(FRL) (&)	(FRL) (&)	Manufacturer
RN^70@23R7%&	23.7	1/2	C	H, J, K	B, D, F	S	P, R	DAL
RN^70@24R0%&	24.0	1/2	C	H, J, K	B, D	S	P, R	DAL
RN^70@24R3%&	24.3	1/2	C	H, J, K	B, D, F	S	P, R	DAL
RN^70@24R6%&	24.6	1/2	C	H, J, K	B, D	S	P, R	DAL
RN^70@24R9%&	24.9	1/2	C, N, R	H, J, K, C, E	B, D, F	S	P, R	ANG, DAL
RN^70@25R2%&	25.2	1/2	C, N, R	H, J, K, C, E	B, D	S	P, R	ANG, DAL
RN^70@25R5%&	25.5	1/2	C, N, R	H, J, K, C, E	B, D, F	S	P, R	ANG, DAL
RN^70@25R8%&	25.8	1/2	C, N, R	H, J, K, C, E	B, D	S	P, R	ANG, DAL
RN^70@26R1%&	26.1	1/2	C, N, R	H, J, K, C, E	B, D, F	S	P, R	ANG, DAL
	Resistance	Power	Term.	Char.	Resistance	Level 1	Level 2	
Part Number	Value (Ohms)	Rating (W)	Type (^)	(@)	Tolerance (%)	(FRL) (&)	(FRL) (&)	Manufacturer
RN^70@26R4%&	26.4	1/2	C, N, R	H, J, K, C, E	B, D	S	P, R	ANG, DAL
RN^70@26R7%&	26.7	1/2	C, N, R	H, J, K, C, E	B, D, F	S	P, R	ANG, DAL
RN^70@27R1%&	27.1	1/2	C, N, R	H, J, K, C, E	B, D	S	P, R	ANG, DAL
RN^70@27R4%&	27.4	1/2	C, N, R	H, J, K, C, E	B, D, F	S	P, R	ANG, DAL
RN^70@27R7%&	27.7	1/2	C, N, R	H, J, K, C, E	B, D	S	P, R	ANG, DAL
RN^70@28R0%&	28.0	1/2	C, N, R	H, J, K, C, E	B, D, F	S	P, R	ANG, DAL
RN^70@28R4%&	28.4	1/2	C, N, R	H, J, K, C, E	B, D	S	P, R	ANG, DAL
RN^70@28R7%&	28.7	1/2	C, N, R	H, J, K, C, E	B, D, F	S	P, R	ANG, DAL
RN^70@29R1%&	29.1	1/2	C, N, R	H, J, K, C, E	B, D	S	P, R	ANG, DAL
	Resistance	Power	Term.	Char.	Resistance	Level 1	Level 2	
Part Number	Value (Ohms)	Rating (W)	Type (^)	(@)	Tolerance (%)	(FRL) (&)	(FRL) (&)	Manufacturer
RN^70@29R4%&	29.4	1/2	C, N, R	H, J, K, C, E	B, D, F	S	P, R	ANG, DAL
RN^70@29R8%&	29.8	1/2	C, N, R	H, J, K, C, E	B, D	S	P, R	ANG, DAL
RN^70@30R1%&	30.1	1/2	C, N, R	H, J, K, C, E	B, D, F	S	P, R	ANG, DAL
RN^70@30R5%&	30.5	1/2	C, N, R	H, J, K, C, E	B, D	S	P, R	ANG, DAL
RN^70@30R9%&	30.9	1/2	C, N, R	H, J, K, C, E	B, D, F	S	P, R	ANG, DAL
RN^70@31R2%&	31.2	1/2	C, N, R	H, J, K, C, E	B, D	S	P, R	ANG, DAL
RN^70@31R6%&	31.6	1/2	C, N, R	H, J, K, C, E	B, D, F	S	P, R	ANG, DAL
RN^70@32R0%&	32.0	1/2	C, N, R	H, J, K, C, E	B, D	S	P, R	ANG, DAL
RN^70@32R4%&	32.4	1/2	C, N, R	H, J, K, C, E	B, D, F	S	P, R	ANG, DAL
	Resistance	Power	Term.	Char.	Resistance	Level 1	Level 2	
Part Number	Value (Ohms)	Rating (W)	Type (^)	(@)	Tolerance (%)	(FRL) (&)	(FRL) (&)	Manufacturer
RN^70@32R8%&	32.8	1/2	C, N, R	H, J, K, C, E	B, D	S	P, R	ANG, DAL
RN^70@33R2%&	33.2	1/2	C, N, R	H, J, K, C, E	B, D, F	S	P, R	ANG, DAL
RN^70@33R6%&	33.6	1/2	C, N, R	H, J, K, C, E	B, D	S	P, R	ANG, DAL
RN^70@34R0%&	34.0	1/2	C, N, R	H, J, K, C, E	B, D, F	S	P, R	ANG, DAL

RN^70@34R4%&	34.4	1/2	C, N, R	H, J, K, C, E	B, D	S	P, R	ANG, DAL
RN^70@34R8%&	34.8	1/2	C, N, R	H, J, K, C, E	B, D, F	S	P, R	ANG, DAL
RN^70@35R2%&	35.2	1/2	C, N, R	H, J, K, C, E	B, D	S	P, R	ANG, DAL
RN^70@35R7%&	35.7	1/2	C, N, R	H, J, K, C, E	B, D, F	S	P, R	ANG, DAL
RN^70@36R1%&	36.1	1/2	C, N, R	H, J, K, C, E	B, D	S	P, R	ANG, DAL
	Resistance	Power	Term.	Char.	Resistance	Level 1	Level 2	
Part Number	Value (Ohms)	Rating (W)	Type (^)	(@)	Tolerance (%)	(FRL) (&)	(FRL) (&)	Manufacturer
RN^70@36R5%&	36.5	1/2	C, N, R	H, J, K, C, E	B, D, F	S	P, R	ANG, DAL
RN^70@37R0%&	37.0	1/2	C, N, R	H, J, K, C, E	B, D	S	P, R	ANG, DAL
RN^70@37R4%&	37.4	1/2	C, N, R	H, J, K, C, E	B, D, F	S	P, R	ANG, DAL
RN^70@37R9%&	37.9	1/2	C, N, R	H, J, K, C, E	B, D	S	P, R	ANG, DAL
RN^70@38R3%&	38.3	1/2	C, N, R	H, J, K, C, E	B, D, F	S	P, R	ANG, DAL
RN^70@38R8%&	38.8	1/2	C, N, R	H, J, K, C, E	B, D	S	P, R	ANG, DAL
RN^70@39R2%&	39.2	1/2	C, N, R	H, J, K, C, E	B, D, F	S	P, R	ANG, DAL
RN^70@39R7%&	39.7	1/2	C, N, R	H, J, K, C, E	B, D	S	P, R	ANG, DAL
RN^70@40R2%&	40.2	1/2	C, N, R	H, J, K, C, E	B, D, F	S	P, R	ANG, DAL
	Resistance	Power	Term.	Char.	Resistance	Level 1	Level 2	
Part Number	Value (Ohms)	Rating (W)	Type (^)	(@)	Tolerance (%)	(FRL) (&)	(FRL) (&)	Manufacturer
	Resistance	Power	Term.	Char.	Resistance	Level 1	Level 2	
Part Number	Value (Ohms)	Rating (W)	Type (^)	(@)	Tolerance (%)	(FRL) (&)	(FRL) (&)	Manufacturer
RN^70@40R7%&	40.7	1/2	C, N, R	H, J, K, C, E	B, D	S	P, R	ANG, DAL
RN^70@41R2%&	41.2	1/2	C, N, R	H, J, K, C, E	B, D, F	S	P, R	ANG, DAL
RN^70@41R7%&	41.7	1/2	C, N, R	H, J, K, C, E	B, D	S	P, R	ANG, DAL
RN^70@42R2%&	42.2	1/2	C, N, R	H, J, K, C, E	B, D, F	S	P, R	ANG, DAL
RN^70@42R7%&	42.7	1/2	C, N, R	H, J, K, C, E	B, D	S	P, R	ANG, DAL
RN^70@43R2%&	43.2	1/2	C, N, R	H, J, K, C, E	B, D, F	S	P, R	ANG, DAL
RN^70@43R7%&	43.7	1/2	C, N, R	H, J, K, C, E	B, D	S	P, R	ANG, DAL
RN^70@44R2%&	44.2	1/2	C, N, R	H, J, K, C, E	B, D, F	S	P, R	ANG, DAL
RN^70@44R8%&	44.8	1/2	C, N, R	H, J, K, C, E	B, D	S	P, R	ANG, DAL
	Resistance	Power	Term.	Char.	Resistance	Level 1	Level 2	
Part Number	Value (Ohms)	Rating (W)	Type (^)	(@)	Tolerance (%)	(FRL) (&)	(FRL) (&)	Manufacturer
RN^70@45R3%&	45.3	1/2	C, N, R	H, J, K, C, E	B, D, F	S	P, R	ANG, DAL
RN^70@45R9%&	45.9	1/2	C, N, R	H, J, K, C, E	B, D	S	P, R	ANG, DAL
RN^70@46R4%&	46.4	1/2	C, N, R	H, J, K, C, E	B, D, F	S	P, R	ANG, DAL
RN^70@47R0%&	47.0	1/2	C, N, R	H, J, K, C, E	B, D	S	P, R	ANG, DAL
RN^70@47R5%&	47.5	1/2	C, N, R	H, J, K, C, E	B, D, F	S	P, R	ANG, DAL
RN^70@48R1%&	48.1	1/2	C, N, R	H, J, K, C, E	B, D	S	P, R	ANG, DAL
RN^70@48R7%&	48.7	1/2	C, N, R	H, J, K, C, E	B, D, F	S	P, R	ANG, DAL
RN^70@49R3%&	49.3	1/2	C, N, R	H, J, K, C, E	B, D	S	P, R	ANG, DAL
RN^70@49R9%&	49.9	1/2	C, N, R	H, J, K, C, E	B, D, F	S	P, R	ANG, DAL
	Resistance	Power	Term.	Char.	Resistance	Level 1	Level 2	
Part Number	Value (Ohms)	Rating (W)	Type (^)	(@)	Tolerance (%)	(FRL) (&)	(FRL) (&)	Manufacturer
RN^70@50R5%&	50.5	1/2	C, N, R	H, J, K, C, E	B, D	S	P, R	ANG, DAL
RN^70@51R1%&	51.1	1/2	C, N, R	H, J, K, C, E	B, D, F	S	P, R	ANG, DAL
RN^70@51R7%&	51.7	1/2	C, N, R	H, J, K, C, E	B, D	S	P, R	ANG, DAL
RN^70@52R3%&	52.3	1/2	C, N, R	H, J, K, C, E	B, D, F	S	P, R	ANG, DAL
RN^70@53R0%&	53.0	1/2	C, N, R	H, J, K, C, E	B, D	S	P, R	ANG, DAL

RN^70@53R6%&	53.6	1/2	C, N, R	H, J, K, C, E	B, D, F	S	P, R	ANG, DAL
RN^70@54R2%&	54.2	1/2	C, N, R	H, J, K, C, E	B, D	S	P, R	ANG, DAL
RN^70@54R9%&	54.9	1/2	C, N, R	H, J, K, C, E	B, D, F	S	P, R	ANG, DAL
RN^70@55R6%&	55.6	1/2	C, N, R	H, J, K, C, E	B, D	S	P, R	ANG, DAL
	Resistance	Power	Term.	Char.	Resistance	Level 1	Level 2	
Part Number	Value (Ohms)	Rating (W)	Type (^)	(@)	Tolerance (%)	(FRL) (&)	(FRL) (&)	Manufacturer
RN^70@56R2%&	56.2	1/2	C, N, R	H, J, K, C, E	B, D, F	S	P, R	ANG, DAL
RN^70@56R9%&	56.9	1/2	C, N, R	H, J, K, C, E	B, D	S	P, R	ANG, DAL
RN^70@57R6%&	57.6	1/2	C, N, R	H, J, K, C, E	B, D, F	S	P, R	ANG, DAL
RN^70@58R3%&	58.3	1/2	C, N, R	H, J, K, C, E	B, D	S	P, R	ANG, DAL
RN^70@59R0%&	59.0	1/2	C, N, R	H, J, K, C, E	B, D, F	S	P, R	ANG, DAL
RN^70@59R7%&	59.7	1/2	C, N, R	H, J, K, C, E	B, D	S	P, R	ANG, DAL
RN^70@60R4%&	60.4	1/2	C, N, R	H, J, K, C, E	B, D, F	S	P, R	ANG, DAL
RN^70@61R2%&	61.2	1/2	C, N, R	H, J, K, C, E	B, D	S	P, R	ANG, DAL
RN^70@61R9%&	61.9	1/2	C, N, R	H, J, K, C, E	B, D, F	S	P, R	ANG, DAL
	Resistance	Power	Term.	Char.	Resistance	Level 1	Level 2	
Part Number	Value (Ohms)	Rating (W)	Type (^)	(@)	Tolerance (%)	(FRL) (&)	(FRL) (&)	Manufacturer
RN^70@62R6%&	62.6	1/2	C, N, R	H, J, K, C, E	B, D	S	P, R	ANG, DAL
RN^70@63R4%&	63.4	1/2	C, N, R	H, J, K, C, E	B, D, F	S	P, R	ANG, DAL
RN^70@64R2%&	64.2	1/2	C, N, R	H, J, K, C, E	B, D	S	P, R	ANG, DAL
RN^70@64R9%&	64.9	1/2	C, N, R	H, J, K, C, E	B, D, F	S	P, R	ANG, DAL
RN^70@65R7%&	65.7	1/2	C, N, R	H, J, K, C, E	B, D	S	P, R	ANG, DAL
RN^70@66R5%&	66.5	1/2	C, N, R	H, J, K, C, E	B, D, F	S	P, R	ANG, DAL
RN^70@67R3%&	67.3	1/2	C, N, R	H, J, K, C, E	B, D	S	P, R	ANG, DAL
RN^70@68R1%&	68.1	1/2	C, N, R	H, J, K, C, E	B, D, F	S	P, R	ANG, DAL
RN^70@69R0%&	69.0	1/2	C, N, R	H, J, K, C, E	B, D	S	P, R	ANG, DAL
	Resistance	Power	Term.	Char.	Resistance	Level 1	Level 2	
Part Number	Value (Ohms)	Rating (W)	Type (^)	(@)	Tolerance (%)	(FRL) (&)	(FRL) (&)	Manufacturer
RN^70@69R8%&	69.8	1/2	C, N, R	H, J, K, C, E	B, D, F	S	P, R	ANG, DAL
RN^70@70R6%&	70.6	1/2	C, N, R	H, J, K, C, E	B, D	S	P, R	ANG, DAL
RN^70@71R5%&	71.5	1/2	C, N, R	H, J, K, C, E	B, D, F	S	P, R	ANG, DAL
RN^70@72R3%&	72.3	1/2	C, N, R	H, J, K, C, E	B, D	S	P, R	ANG, DAL
RN^70@73R2%&	73.2	1/2	C, N, R	H, J, K, C, E	B, D, F	S	P, R	ANG, DAL
RN^70@74R1%&	74.1	1/2	C, N, R	H, J, K, C, E	B, D	S	P, R	ANG, DAL
RN^70@75R0%&	75.0	1/2	C, N, R	H, J, K, C, E	B, D, F	S	P, R	ANG, DAL
RN^70@75R9%&	75.9	1/2	C, N, R	H, J, K, C, E	B, D	S	P, R	ANG, DAL
RN^70@76R8%&	76.8	1/2	C, N, R	H, J, K, C, E	B, D, F	S	P, R	ANG, DAL
	Resistance	Power	Term.	Char.	Resistance	Level 1	Level 2	
Part Number	Value (Ohms)	Rating (W)	Type (^)	(@)	Tolerance (%)	(FRL) (&)	(FRL) (&)	Manufacturer
	Resistance	Power	Term.	Char.	Resistance	Level 1	Level 2	
Part Number	Value (Ohms)	Rating (W)	Type (^)	(@)	Tolerance (%)	(FRL) (&)	(FRL) (&)	Manufacturer
RN^70@77R7%&	77.7	1/2	C, N, R	H, J, K, C, E	B, D	S	P, R	ANG, DAL
RN^70@78R7%&	78.7	1/2	C, N, R	H, J, K, C, E	B, D, F	S	P, R	ANG, DAL
RN^70@79R6%&	79.6	1/2	C, N, R	H, J, K, C, E	B, D	S	P, R	ANG, DAL
RN^70@80R6%&	80.6	1/2	C, N, R	H, J, K, C, E	B, D, F	S	P, R	ANG, DAL
RN^70@81R6%&	81.6	1/2	C, N, R	H, J, K, C, E	B, D	S	P, R	ANG, DAL
RN^70@82R5%&	82.5	1/2	C, N, R	H, J, K, C, E	B, D, F	S	P, R	ANG, DAL

RN^70@83R5%&	83.5	1/2	C, N, R	H, J, K, C, E	B, D	S	P, R	ANG, DAL
RN^70@84R5%&	84.5	1/2	C, N, R	H, J, K, C, E	B, D, F	S	P, R	ANG, DAL
RN^70@85R6%&	85.6	1/2	C, N, R	H, J, K, C, E	B, D	S	P, R	ANG, DAL
	Resistance	Power	Term.	Char.	Resistance	Level 1	Level 2	
Part Number	Value (Ohms)	Rating (W)	Type (^)	(@)	Tolerance (%)	(FRL) (&)	(FRL) (&)	Manufacturer
RN^70@86R6%&	86.6	1/2	C, N, R	H, J, K, C, E	B, D, F	S	P, R	ANG, DAL
RN^70@87R6%&	87.6	1/2	C, N, R	H, J, K, C, E	B, D	S	P, R	ANG, DAL
RN^70@88R7%&	88.7	1/2	C, N, R	H, J, K, C, E	B, D, F	S	P, R	ANG, DAL
RN^70@89R8%&	89.8	1/2	C, N, R	H, J, K, C, E	B, D	S	P, R	ANG, DAL
RN^70@90R9%&	90.9	1/2	C, N, R	H, J, K, C, E	B, D, F	S	P, R	ANG, DAL
RN^70@92R0%&	92.0	1/2	C, N, R	H, J, K, C, E	B, D	S	P, R	ANG, DAL
RN^70@93R1%&	93.1	1/2	C, N, R	H, J, K, C, E	B, D, F	S	P, R	ANG, DAL
RN^70@94R2%&	94.2	1/2	C, N, R	H, J, K, C, E	B, D	S	P, R	ANG, DAL
RN^70@95R3%&	95.3	1/2	C, N, R	H, J, K, C, E	B, D, F	S	P, R	ANG, DAL
	Resistance	Power	Term.	Char.	Resistance	Level 1	Level 2	
Part Number	Value (Ohms)	Rating (W)	Type (^)	(@)	Tolerance (%)	(FRL) (&)	(FRL) (&)	Manufacturer
RN^70@96R5%&	96.5	1/2	C, N, R	H, J, K, C, E	B, D	S	P, R	ANG, DAL
RN^70@97R6%&	97.6	1/2	C, N, R	H, J, K, C, E	B, D, F	S	P, R	ANG, DAL
RN^70@98R8%&	98.8	1/2	C, N, R	H, J, K, C, E	B, D	S	P, R	ANG, DAL
	Resistance	Power	Term.	Char.	Resistance	Level 1	Level 2	
Part Number	Value (Ohms)	Rating (W)	Type (^)	(@)	Tolerance (%)	(FRL) (&)	(FRL) (&)	Manufacturer
	Resistance	Power	Term.	Char.	Resistance	Level 1	Level 2	
Part Number	Value (Ohms)	Rating (W)	Type (^)	(@)	Tolerance (%)	(FRL) (&)	(FRL) (&)	Manufacturer
	Resistance	Power	Term.	Char.	Resistance	Level 1	Level 2	
Part Number	Value (Ohms)	Rating (W)	Type (^)	(@)	Tolerance (%)	(FRL) (&)	(FRL) (&)	Manufacturer

RN^70 Film Resistors: 100 Ohms through 988 Ohms

	Resistance	Power	Term.	Char.	Resistance	Level 1	Level 2	
Part Number	Value (Ohms)	Rating (W)	Type (^)	(@)	Tolerance (%)	(FRL) (&)	(FRL) (&)	Manufacturer
RN^70@1000%&	100	1/2	C, N, R	H, J, K, C, E	B, D, F	S	P, R	ANG, DAL
RN^70@1010%&	101	1/2	C, N, R	H, J, K, C, E	B, D	S	P, R	ANG, DAL
RN^70@1020%&	102	1/2	C, N, R	H, J, K, C, E	B, D, F	S	P, R	ANG, DAL
RN^70@1040%&	104	1/2	C, N, R	H, J, K, C, E	B, D	S	P, R	ANG, DAL
RN^70@1050%&	105	1/2	C, N, R	H, J, K, C, E	B, D, F	S	P, R	ANG, DAL
RN^70@1060%&	106	1/2	C, N, R	H, J, K, C, E	B, D	S	P, R	ANG, DAL
RN^70@1070%&	107	1/2	C, N, R	H, J, K, C, E	B, D, F	S	P, R	ANG, DAL
RN^70@1090%&	109	1/2	C, N, R	H, J, K, C, E	B, D	S	P, R	ANG, DAL
RN^70@1100%&	110	1/2	C, N, R	H, J, K, C, E	B, D, F	S	P, R	ANG, DAL
	Resistance	Power	Term.	Char.	Resistance	Level 1	Level 2	
Part Number	Value (Ohms)	Rating (W)	Type (^)	(@)	Tolerance (%)	(FRL) (&)	(FRL) (&)	Manufacturer
RN^70@1110%&	111	1/2	C, N, R	H, J, K, C, E	B, D	S	P, R	ANG, DAL
RN^70@1130%&	113	1/2	C, N, R	H, J, K, C, E	B, D, F	S	P, R	ANG, DAL
RN^70@1140%&	114	1/2	C, N, R	H, J, K, C, E	B, D	S	P, R	ANG, DAL
RN^70@1150%&	115	1/2	C, N, R	H, J, K, C, E	B, D, F	S	P, R	ANG, DAL

RN^70@1170%&	117	1/2	C, N, R	H, J, K, C, E	B, D	S	P, R	ANG, DAL
RN^70@1180%&	118	1/2	C, N, R	H, J, K, C, E	B, D, F	S	P, R	ANG, DAL
RN^70@1200%&	120	1/2	C, N, R	H, J, K, C, E	B, D	S	P, R	ANG, DAL
RN^70@1210%&	121	1/2	C, N, R	H, J, K, C, E	B, D, F	S	P, R	ANG, DAL
RN^70@1230%&	123	1/2	C, N, R	H, J, K, C, E	B, D	S	P, R	ANG, DAL
	Resistance	Power	Term.	Char.	Resistance	Level 1	Level 2	
Part Number	Value (Ohms)	Rating (W)	Type (^)	(@)	Tolerance (%)	(FRL) (&)	(FRL) (&)	Manufacturer
RN^70@1240%&	124	1/2	C, N, R	H, J, K, C, E	B, D, F	S	P, R	ANG, DAL
RN^70@1260%&	126	1/2	C, N, R	H, J, K, C, E	B, D	S	P, R	ANG, DAL
RN^70@1270%&	127	1/2	C, N, R	H, J, K, C, E	B, D, F	S	P, R	ANG, DAL
RN^70@1290%&	129	1/2	C, N, R	H, J, K, C, E	B, D	S	P, R	ANG, DAL
RN^70@1300%&	130	1/2	C, N, R	H, J, K, C, E	B, D, F	S	P, R	ANG, DAL
RN^70@1320%&	132	1/2	C, N, R	H, J, K, C, E	B, D	S	P, R	ANG, DAL
RN^70@1330%&	133	1/2	C, N, R	H, J, K, C, E	B, D, F	S	P, R	ANG, DAL
RN^70@1350%&	135	1/2	C, N, R	H, J, K, C, E	B, D	S	P, R	ANG, DAL
RN^70@1370%&	137	1/2	C, N, R	H, J, K, C, E	B, D, F	S	P, R	ANG, DAL
	Resistance	Power	Term.	Char.	Resistance	Level 1	Level 2	
Part Number	Value (Ohms)	Rating (W)	Type (^)	(@)	Tolerance (%)	(FRL) (&)	(FRL) (&)	Manufacturer
RN^70@1380%&	138	1/2	C, N, R	H, J, K, C, E	B, D	S	P, R	ANG, DAL
RN^70@1400%&	140	1/2	C, N, R	H, J, K, C, E	B, D, F	S	P, R	ANG, DAL
RN^70@1420%&	142	1/2	C, N, R	H, J, K, C, E	B, D	S	P, R	ANG, DAL
RN^70@1430%&	143	1/2	C, N, R	H, J, K, C, E	B, D, F	S	P, R	ANG, DAL
RN^70@1450%&	145	1/2	C, N, R	H, J, K, C, E	B, D	S	P, R	ANG, DAL
RN^70@1470%&	147	1/2	C, N, R	H, J, K, C, E	B, D, F	S	P, R	ANG, DAL
RN^70@1490%&	149	1/2	C, N, R	H, J, K, C, E	B, D	S	P, R	ANG, DAL
RN^70@1500%&	150	1/2	C, N, R	H, J, K, C, E	B, D, F	S	P, R	ANG, DAL
RN^70@1520%&	152	1/2	C, N, R	H, J, K, C, E	B, D	S	P, R	ANG, DAL
	Resistance	Power	Term.	Char.	Resistance	Level 1	Level 2	
Part Number	Value (Ohms)	Rating (W)	Type (^)	(@)	Tolerance (%)	(FRL) (&)	(FRL) (&)	Manufacturer
RN^70@1540%&	154	1/2	C, N, R	H, J, K, C, E	B, D, F	S	P, R	ANG, DAL
RN^70@1560%&	156	1/2	C, N, R	H, J, K, C, E	B, D	S	P, R	ANG, DAL
RN^70@1580%&	158	1/2	C, N, R	H, J, K, C, E	B, D, F	S	P, R	ANG, DAL
RN^70@1600%&	160	1/2	C, N, R	H, J, K, C, E	B, D	S	P, R	ANG, DAL
RN^70@1620%&	162	1/2	C, N, R	H, J, K, C, E	B, D, F	S	P, R	ANG, DAL
RN^70@1640%&	164	1/2	C, N, R	H, J, K, C, E	B, D	S	P, R	ANG, DAL
RN^70@1650%&	165	1/2	C, N, R	H, J, K, C, E	B, D, F	S	P, R	ANG, DAL
RN^70@1670%&	167	1/2	C, N, R	H, J, K, C, E	B, D	S	P, R	ANG, DAL
RN^70@1690%&	169	1/2	C, N, R	H, J, K, C, E	B, D, F	S	P, R	ANG, DAL
	Resistance	Power	Term.	Char.	Resistance	Level 1	Level 2	
Part Number	Value (Ohms)	Rating (W)	Type (^)	(@)	Tolerance (%)	(FRL) (&)	(FRL) (&)	Manufacturer
RN^70@1720%&	172	1/2	C, N, R	H, J, K, C, E	B, D	S	P, R	ANG, DAL
RN^70@1740%&	174	1/2	C, N, R	H, J, K, C, E	B, D, F	S	P, R	ANG, DAL
RN^70@1760%&	176	1/2	C, N, R	H, J, K, C, E	B, D	S	P, R	ANG, DAL
RN^70@1780%&	178	1/2	C, N, R	H, J, K, C, E	B, D, F	S	P, R	ANG, DAL
RN^70@1800%&	180	1/2	C, N, R	H, J, K, C, E	B, D	S	P, R	ANG, DAL
RN^70@1820%&	182	1/2	C, N, R	H, J, K, C, E	B, D, F	S	P, R	ANG, DAL
RN^70@1840%&	184	1/2	C, N, R	H, J, K, C, E	B, D	S	P, R	ANG, DAL

RN^70@1870%&	187	1/2	C, N, R	H, J, K, C, E	B, D, F	S	P, R	ANG, DAL
RN^70@1890%&	189	1/2	C, N, R	H, J, K, C, E	B, D	S	P, R	ANG, DAL
	Resistance	Power	Term.	Char.	Resistance	Level 1	Level 2	
Part Number	Value (Ohms)	Rating (W)	Type (^)	(@)	Tolerance (%)	(FRL) (&)	(FRL) (&)	Manufacturer
RN^70@1910%&	191	1/2	C, N, R	H, J, K, C, E	B, D, F	S	P, R	ANG, DAL
RN^70@1930%&	193	1/2	C, N, R	H, J, K, C, E	B, D	S	P, R	ANG, DAL
RN^70@1960%&	196	1/2	C, N, R	H, J, K, C, E	B, D, F	S	P, R	ANG, DAL
RN^70@1980%&	198	1/2	C, N, R	H, J, K, C, E	B, D	S	P, R	ANG, DAL
RN^70@2000%&	200	1/2	C, N, R	H, J, K, C, E	B, D, F	S	P, R	ANG, DAL
RN^70@2030%&	203	1/2	C, N, R	H, J, K, C, E	B, D	S	P, R	ANG, DAL
RN^70@2050%&	205	1/2	C, N, R	H, J, K, C, E	B, D, F	S	P, R	ANG, DAL
RN^70@2080%&	208	1/2	C, N, R	H, J, K, C, E	B, D	S	P, R	ANG, DAL
RN^70@2100%&	210	1/2	C, N, R	H, J, K, C, E	B, D, F	S	P, R	ANG, DAL
	Resistance	Power	Term.	Char.	Resistance	Level 1	Level 2	
Part Number	Value (Ohms)	Rating (W)	Type (^)	(@)	Tolerance (%)	(FRL) (&)	(FRL) (&)	Manufacturer
	Resistance	Power	Term.	Char.	Resistance	Level 1	Level 2	
Part Number	Value (Ohms)	Rating (W)	Type (^)	(@)	Tolerance (%)	(FRL) (&)	(FRL) (&)	Manufacturer
RN^70@2130%&	213	1/2	C, N, R	H, J, K, C, E	B, D	S	P, R	ANG, DAL
RN^70@2150%&	215	1/2	C, N, R	H, J, K, C, E	B, D, F	S	P, R	ANG, DAL
RN^70@2180%&	218	1/2	C, N, R	H, J, K, C, E	B, D	S	P, R	ANG, DAL
RN^70@2210%&	221	1/2	C, N, R	H, J, K, C, E	B, D, F	S	P, R	ANG, DAL
RN^70@2230%&	223	1/2	C, N, R	H, J, K, C, E	B, D	S	P, R	ANG, DAL
RN^70@2260%&	226	1/2	C, N, R	H, J, K, C, E	B, D, F	S	P, R	ANG, DAL
RN^70@2290%&	229	1/2	C, N, R	H, J, K, C, E	B, D	S	P, R	ANG, DAL
RN^70@2320%&	232	1/2	C, N, R	H, J, K, C, E	B, D, F	S	P, R	ANG, DAL
RN^70@2340%&	234	1/2	C, N, R	H, J, K, C, E	B, D	S	P, R	ANG, DAL
	Resistance	Power	Term.	Char.	Resistance	Level 1	Level 2	
Part Number	Value (Ohms)	Rating (W)	Type (^)	(@)	Tolerance (%)	(FRL) (&)	(FRL) (&)	Manufacturer
RN^70@2370%&	237	1/2	C, N, R	H, J, K, C, E	B, D, F	S	P, R	ANG, DAL
RN^70@2400%&	240	1/2	C, N, R	H, J, K, C, E	B, D	S	P, R	ANG, DAL
RN^70@2430%&	243	1/2	C, N, R	H, J, K, C, E	B, D, F	S	P, R	ANG, DAL
RN^70@2460%&	246	1/2	C, N, R	H, J, K, C, E	B, D	S	P, R	ANG, DAL
RN^70@2490%&	249	1/2	C, N, R	H, J, K, C, E	B, D, F	S	P, R	ANG, DAL
RN^70@2520%&	252	1/2	C, N, R	H, J, K, C, E	B, D	S	P, R	ANG, DAL
RN^70@2550%&	255	1/2	C, N, R	H, J, K, C, E	B, D, F	S	P, R	ANG, DAL
RN^70@2580%&	258	1/2	C, N, R	H, J, K, C, E	B, D	S	P, R	ANG, DAL
RN^70@2610%&	261	1/2	C, N, R	H, J, K, C, E	B, D, F	S	P, R	ANG, DAL
	Resistance	Power	Term.	Char.	Resistance	Level 1	Level 2	
Part Number	Value (Ohms)	Rating (W)	Type (^)	(@)	Tolerance (%)	(FRL) (&)	(FRL) (&)	Manufacturer
RN^70@2640%&	264	1/2	C, N, R	H, J, K, C, E	B, D	S	P, R	ANG, DAL
RN^70@2670%&	267	1/2	C, N, R	H, J, K, C, E	B, D, F	S	P, R	ANG, DAL
RN^70@2710%&	271	1/2	C, N, R	H, J, K, C, E	B, D	S	P, R	ANG, DAL
RN^70@2740%&	274	1/2	C, N, R	H, J, K, C, E	B, D, F	S	P, R	ANG, DAL
RN^70@2770%&	277	1/2	C, N, R	H, J, K, C, E	B, D	S	P, R	ANG, DAL
RN^70@2800%&	280	1/2	C, N, R	H, J, K, C, E	B, D, F	S	P, R	ANG, DAL
RN^70@2840%&	284	1/2	C, N, R	H, J, K, C, E	B, D	S	P, R	ANG, DAL
RN^70@2870%&	287	1/2	C, N, R	H, J, K, C, E	B, D, F	S	P, R	ANG, DAL

RN^70@2910%&	291	1/2	C, N, R	H, J, K, C, E	B, D	S	P, R	ANG, DAL
	Resistance	Power	Term.	Char.	Resistance	Level 1	Level 2	
Part Number	Value (Ohms)	Rating (W)	Type (^)	(@)	Tolerance (%)	(FRL) (&)	(FRL) (&)	Manufacturer
RN^70@2940%&	294	1/2	C, N, R	H, J, K, C, E	B, D, F	S	P, R	ANG, DAL
RN^70@2980%&	298	1/2	C, N, R	H, J, K, C, E	B, D	S	P, R	ANG, DAL
RN^70@3010%&	301	1/2	C, N, R	H, J, K, C, E	B, D, F	S	P, R	ANG, DAL
RN^70@3050%&	305	1/2	C, N, R	H, J, K, C, E	B, D	S	P, R	ANG, DAL
RN^70@3090%&	309	1/2	C, N, R	H, J, K, C, E	B, D, F	S	P, R	ANG, DAL
RN^70@3120%&	312	1/2	C, N, R	H, J, K, C, E	B, D	S	P, R	ANG, DAL
RN^70@3160%&	316	1/2	C, N, R	H, J, K, C, E	B, D, F	S	P, R	ANG, DAL
RN^70@3200%&	320	1/2	C, N, R	H, J, K, C, E	B, D	S	P, R	ANG, DAL
RN^70@3240%&	324	1/2	C, N, R	H, J, K, C, E	B, D, F	S	P, R	ANG, DAL
	Resistance	Power	Term.	Char.	Resistance	Level 1	Level 2	
Part Number	Value (Ohms)	Rating (W)	Type (^)	(@)	Tolerance (%)	(FRL) (&)	(FRL) (&)	Manufacturer
RN^70@3280%&	328	1/2	C, N, R	H, J, K, C, E	B, D	S	P, R	ANG, DAL
RN^70@3320%&	332	1/2	C, N, R	H, J, K, C, E	B, D, F	S	P, R	ANG, DAL
RN^70@3360%&	336	1/2	C, N, R	H, J, K, C, E	B, D	S	P, R	ANG, DAL
RN^70@3400%&	340	1/2	C, N, R	H, J, K, C, E	B, D, F	S	P, R	ANG, DAL
RN^70@3440%&	344	1/2	C, N, R	H, J, K, C, E	B, D	S	P, R	ANG, DAL
RN^70@3480%&	348	1/2	C, N, R	H, J, K, C, E	B, D, F	S	P, R	ANG, DAL
RN^70@3520%&	352	1/2	C, N, R	H, J, K, C, E	B, D	S	P, R	ANG, DAL
RN^70@3570%&	357	1/2	C, N, R	H, J, K, C, E	B, D, F	S	P, R	ANG, DAL
RN^70@3610%&	361	1/2	C, N, R	H, J, K, C, E	B, D	S	P, R	ANG, DAL
	Resistance	Power	Term.	Char.	Resistance	Level 1	Level 2	
Part Number	Value (Ohms)	Rating (W)	Type (^)	(@)	Tolerance (%)	(FRL) (&)	(FRL) (&)	Manufacturer
RN^70@3650%&	365	1/2	C, N, R	H, J, K, C, E	B, D, F	S	P, R	ANG, DAL
RN^70@3700%&	370	1/2	C, N, R	H, J, K, C, E	B, D	S	P, R	ANG, DAL
RN^70@3740%&	374	1/2	C, N, R	H, J, K, C, E	B, D, F	S	P, R	ANG, DAL
RN^70@3790%&	379	1/2	C, N, R	H, J, K, C, E	B, D	S	P, R	ANG, DAL
RN^70@3830%&	383	1/2	C, N, R	H, J, K, C, E	B, D, F	S	P, R	ANG, DAL
RN^70@3880%&	388	1/2	C, N, R	H, J, K, C, E	B, D	S	P, R	ANG, DAL
RN^70@3920%&	392	1/2	C, N, R	H, J, K, C, E	B, D, F	S	P, R	ANG, DAL
RN^70@3970%&	397	1/2	C, N, R	H, J, K, C, E	B, D	S	P, R	ANG, DAL
RN^70@4020%&	402	1/2	C, N, R	H, J, K, C, E	B, D, F	S	P, R	ANG, DAL
	Resistance	Power	Term.	Char.	Resistance	Level 1	Level 2	
Part Number	Value (Ohms)	Rating (W)	Type (^)	(@)	Tolerance (%)	(FRL) (&)	(FRL) (&)	Manufacturer
	Resistance	Power	Term.	Char.	Resistance	Level 1	Level 2	
Part Number	Value (Ohms)	Rating (W)	Type (^)	(@)	Tolerance (%)	(FRL) (&)	(FRL) (&)	Manufacturer
RN^70@4070%&	407	1/2	C, N, R	H, J, K, C, E	B, D	S	P, R	ANG, DAL
RN^70@4120%&	412	1/2	C, N, R	H, J, K, C, E	B, D, F	S	P, R	ANG, DAL
RN^70@4170%&	417	1/2	C, N, R	H, J, K, C, E	B, D	S	P, R	ANG, DAL
RN^70@4220%&	422	1/2	C, N, R	H, J, K, C, E	B, D, F	S	P, R	ANG, DAL
RN^70@4270%&	427	1/2	C, N, R	H, J, K, C, E	B, D	S	P, R	ANG, DAL
RN^70@4320%&	432	1/2	C, N, R	H, J, K, C, E	B, D, F	S	P, R	ANG, DAL
RN^70@4370%&	437	1/2	C, N, R	H, J, K, C, E	B, D	S	P, R	ANG, DAL
RN^70@4420%&	442	1/2	C, N, R	H, J, K, C, E	B, D, F	S	P, R	ANG, DAL
RN^70@4480%&	448	1/2	C, N, R	H, J, K, C, E	B, D	S	P, R	ANG, DAL

	Resistance	Power	Term.	Char.	Resistance	Level 1	Level 2	
Part Number	Value (Ohms)	Rating (W)	Type (^)	(@)	Tolerance (%)	(FRL) (&)	(FRL) (&)	Manufacturer
RN^70@4530%&	453	1/2	C, N, R	H, J, K, C, E	B, D, F	S	P, R	ANG, DAL
RN^70@4590%&	459	1/2	C, N, R	H, J, K, C, E	B, D	S	P, R	ANG, DAL
RN^70@4640%&	464	1/2	C, N, R	H, J, K, C, E	B, D, F	S	P, R	ANG, DAL
RN^70@4700%&	470	1/2	C, N, R	H, J, K, C, E	B, D	S	P, R	ANG, DAL
RN^70@4750%&	475	1/2	C, N, R	H, J, K, C, E	B, D, F	S	P, R	ANG, DAL
RN^70@4810%&	481	1/2	C, N, R	H, J, K, C, E	B, D	S	P, R	ANG, DAL
RN^70@4870%&	487	1/2	C, N, R	H, J, K, C, E	B, D, F	S	P, R	ANG, DAL
RN^70@4930%&	493	1/2	C, N, R	H, J, K, C, E	B, D	S	P, R	ANG, DAL
RN^70@4990%&	499	1/2	C, N, R	H, J, K, C, E	B, D, F	S	P, R	ANG, DAL
	Resistance	Power	Term.	Char.	Resistance	Level 1	Level 2	
Part Number	Value (Ohms)	Rating (W)	Type (^)	(@)	Tolerance (%)	(FRL) (&)	(FRL) (&)	Manufacturer
RN^70@5050%&	505	1/2	C, N, R	H, J, K, C, E	B, D	S	P, R	ANG, DAL
RN^70@5110%&	511	1/2	C, N, R	H, J, K, C, E	B, D, F	S	P, R	ANG, DAL
RN^70@5170%&	517	1/2	C, N, R	H, J, K, C, E	B, D	S	P, R	ANG, DAL
RN^70@5230%&	523	1/2	C, N, R	H, J, K, C, E	B, D, F	S	P, R	ANG, DAL
RN^70@5300%&	530	1/2	C, N, R	H, J, K, C, E	B, D	S	P, R	ANG, DAL
RN^70@5360%&	536	1/2	C, N, R	H, J, K, C, E	B, D, F	S	P, R	ANG, DAL
RN^70@5420%&	542	1/2	C, N, R	H, J, K, C, E	B, D	S	P, R	ANG, DAL
RN^70@5490%&	549	1/2	C, N, R	H, J, K, C, E	B, D, F	S	P, R	ANG, DAL
RN^70@5560%&	556	1/2	C, N, R	H, J, K, C, E	B, D	S	P, R	ANG, DAL
	Resistance	Power	Term.	Char.	Resistance	Level 1	Level 2	
Part Number	Value (Ohms)	Rating (W)	Type (^)	(@)	Tolerance (%)	(FRL) (&)	(FRL) (&)	Manufacturer
RN^70@5620%&	562	1/2	C, N, R	H, J, K, C, E	B, D, F	S	P, R	ANG, DAL
RN^70@5690%&	569	1/2	C, N, R	H, J, K, C, E	B, D	S	P, R	ANG, DAL
RN^70@5760%&	576	1/2	C, N, R	H, J, K, C, E	B, D, F	S	P, R	ANG, DAL
RN^70@5830%&	583	1/2	C, N, R	H, J, K, C, E	B, D	S	P, R	ANG, DAL
RN^70@5900%&	590	1/2	C, N, R	H, J, K, C, E	B, D, F	S	P, R	ANG, DAL
RN^70@5970%&	597	1/2	C, N, R	H, J, K, C, E	B, D	S	P, R	ANG, DAL
RN^70@6040%&	604	1/2	C, N, R	H, J, K, C, E	B, D, F	S	P, R	ANG, DAL
RN^70@6120%&	612	1/2	C, N, R	H, J, K, C, E	B, D	S	P, R	ANG, DAL
RN^70@6190%&	619	1/2	C, N, R	H, J, K, C, E	B, D, F	S	P, R	ANG, DAL
	Resistance	Power	Term.	Char.	Resistance	Level 1	Level 2	
Part Number	Value (Ohms)	Rating (W)	Type (^)	(@)	Tolerance (%)	(FRL) (&)	(FRL) (&)	Manufacturer
RN^70@6260%&	626	1/2	C, N, R	H, J, K, C, E	B, D	S	P, R	ANG, DAL
RN^70@6340%&	634	1/2	C, N, R	H, J, K, C, E	B, D, F	S	P, R	ANG, DAL
RN^70@6420%&	642	1/2	C, N, R	H, J, K, C, E	B, D	S	P, R	ANG, DAL
RN^70@6490%&	649	1/2	C, N, R	H, J, K, C, E	B, D, F	S	P, R	ANG, DAL
RN^70@6570%&	657	1/2	C, N, R	H, J, K, C, E	B, D	S	P, R	ANG, DAL
RN^70@6650%&	665	1/2	C, N, R	H, J, K, C, E	B, D, F	S	P, R	ANG, DAL
RN^70@6730%&	673	1/2	C, N, R	H, J, K, C, E	B, D	S	P, R	ANG, DAL
RN^70@6810%&	681	1/2	C, N, R	H, J, K, C, E	B, D, F	S	P, R	ANG, DAL
RN^70@6900%&	690	1/2	C, N, R	H, J, K, C, E	B, D	S	P, R	ANG, DAL
	Resistance	Power	Term.	Char.	Resistance	Level 1	Level 2	
Part Number	Value (Ohms)	Rating (W)	Type (^)	(@)	Tolerance (%)	(FRL) (&)	(FRL) (&)	Manufacturer
RN^70@6980%&	698	1/2	C, N, R	H, J, K, C, E	B, D, F	S	P, R	ANG, DAL

RN^70@7060%&	706	1/2	C, N, R	H, J, K, C, E	B, D	S	P, R	ANG, DAL
RN^70@7150%&	715	1/2	C, N, R	H, J, K, C, E	B, D, F	S	P, R	ANG, DAL
RN^70@7230%&	723	1/2	C, N, R	H, J, K, C, E	B, D	S	P, R	ANG, DAL
RN^70@7320%&	732	1/2	C, N, R	H, J, K, C, E	B, D, F	S	P, R	ANG, DAL
RN^70@7410%&	741	1/2	C, N, R	H, J, K, C, E	B, D	S	P, R	ANG, DAL
RN^70@7500%&	750	1/2	C, N, R	H, J, K, C, E	B, D, F	S	P, R	ANG, DAL
RN^70@7590%&	759	1/2	C, N, R	H, J, K, C, E	B, D	S	P, R	ANG, DAL
RN^70@7680%&	768	1/2	C, N, R	H, J, K, C, E	B, D, F	S	P, R	ANG, DAL
	Resistance	Power	Term.	Char.	Resistance	Level 1	Level 2	
Part Number	Value (Ohms)	Rating (W)	Type (^)	(@)	Tolerance (%)	(FRL) (&)	(FRL) (&)	Manufacturer
	Resistance	Power	Term.	Char.	Resistance	Level 1	Level 2	
Part Number	Value (Ohms)	Rating (W)	Type (^)	(@)	Tolerance (%)	(FRL) (&)	(FRL) (&)	Manufacturer
RN^70@7770%&	777	1/2	C, N, R	H, J, K, C, E	B, D	S	P, R	ANG, DAL
RN^70@7870%&	787	1/2	C, N, R	H, J, K, C, E	B, D, F	S	P, R	ANG, DAL
RN^70@7960%&	796	1/2	C, N, R	H, J, K, C, E	B, D	S	P, R	ANG, DAL
RN^70@8060%&	806	1/2	C, N, R	H, J, K, C, E	B, D, F	S	P, R	ANG, DAL
RN^70@8160%&	816	1/2	C, N, R	H, J, K, C, E	B, D	S	P, R	ANG, DAL
RN^70@8250%&	825	1/2	C, N, R	H, J, K, C, E	B, D, F	S	P, R	ANG, DAL
RN^70@8350%&	835	1/2	C, N, R	H, J, K, C, E	B, D	S	P, R	ANG, DAL
RN^70@8450%&	845	1/2	C, N, R	H, J, K, C, E	B, D, F	S	P, R	ANG, DAL
RN^70@8560%&	856	1/2	C, N, R	H, J, K, C, E	B, D	S	P, R	ANG, DAL
	Resistance	Power	Term.	Char.	Resistance	Level 1	Level 2	
Part Number	Value (Ohms)	Rating (W)	Type (^)	(@)	Tolerance (%)	(FRL) (&)	(FRL) (&)	Manufacturer
RN^70@8660%&	866	1/2	C, N, R	H, J, K, C, E	B, D, F	S	P, R	ANG, DAL
RN^70@8760%&	876	1/2	C, N, R	H, J, K, C, E	B, D	S	P, R	ANG, DAL
RN^70@8870%&	887	1/2	C, N, R	H, J, K, C, E	B, D, F	S	P, R	ANG, DAL
RN^70@8980%&	898	1/2	C, N, R	H, J, K, C, E	B, D	S	P, R	ANG, DAL
RN^70@9090%&	909	1/2	C, N, R	H, J, K, C, E	B, D, F	S	P, R	ANG, DAL
RN^70@9200%&	920	1/2	C, N, R	H, J, K, C, E	B, D	S	P, R	ANG, DAL
RN^70@9310%&	931	1/2	C, N, R	H, J, K, C, E	B, D, F	S	P, R	ANG, DAL
RN^70@9420%&	942	1/2	C, N, R	H, J, K, C, E	B, D	S	P, R	ANG, DAL
RN^70@9530%&	953	1/2	C, N, R	H, J, K, C, E	B, D, F	S	P, R	ANG, DAL
	Resistance	Power	Term.	Char.	Resistance	Level 1	Level 2	
Part Number	Value (Ohms)	Rating (W)	Type (^)	(@)	Tolerance (%)	(FRL) (&)	(FRL) (&)	Manufacturer
RN^70@9650%&	965	1/2	C, N, R	H, J, K, C, E	B, D	S	P, R	ANG, DAL
RN^70@9760%&	976	1/2	C, N, R	H, J, K, C, E	B, D, F	S	P, R	ANG, DAL
RN^70@9880%&	988	1/2	C, N, R	H, J, K, C, E	B, D	S	P, R	ANG, DAL
	Resistance	Power	Term.	Char.	Resistance	Level 1	Level 2	
Part Number	Value (Ohms)	Rating (W)	Type (^)	(@)	Tolerance (%)	(FRL) (&)	(FRL) (&)	Manufacturer
	Resistance	Power	Term.	Char.	Resistance	Level 1	Level 2	
Part Number	Value (Ohms)	Rating (W)	Type (^)	(@)	Tolerance (%)	(FRL) (&)	(FRL) (&)	Manufacturer
	Resistance	Power	Term.	Char.	Resistance	Level 1	Level 2	
Part Number	Value (Ohms)	Rating (W)	Type (^)	(@)	Tolerance (%)	(FRL) (&)	(FRL) (&)	Manufacturer

RN^70 Film Resistors: 1,000 Ohms through 9,880 Ohms

	Resistance	Power	Term.	Char.	Resistance	Level 1	Level 2	
Part Number	Value (Ohms)	Rating (W)	Type (^)	(@)	Tolerance (%)	(FRL) (&)	(FRL) (&)	Manufacturer
RN^70@1001%&	1,000	1/2	C, N, R	H, J, K, C, E	B, D, F	S	P, R	ANG, DAL
RN^70@1011%&	1,010	1/2	C, N, R	H, J, K, C, E	B, D	S	P, R	ANG, DAL
RN^70@1021%&	1,020	1/2	C, N, R	H, J, K, C, E	B, D, F	S	P, R	ANG, DAL
RN^70@1041%&	1,040	1/2	C, N, R	H, J, K, C, E	B, D	S	P, R	ANG, DAL
RN^70@1051%&	1,050	1/2	C, N, R	H, J, K, C, E	B, D, F	S	P, R	ANG, DAL
RN^70@1061%&	1,060	1/2	C, N, R	H, J, K, C, E	B, D	S	P, R	ANG, DAL
RN^70@1071%&	1,070	1/2	C, N, R	H, J, K, C, E	B, D, F	S	P, R	ANG, DAL
RN^70@1091%&	1,090	1/2	C, N, R	H, J, K, C, E	B, D	S	P, R	ANG, DAL
RN^70@1101%&	1,100	1/2	C, N, R	H, J, K, C, E	B, D, F	S	P, R	ANG, DAL
	Resistance	Power	Term.	Char.	Resistance	Level 1	Level 2	
Part Number	Value (Ohms)	Rating (W)	Type (^)	(@)	Tolerance (%)	(FRL) (&)	(FRL) (&)	Manufacturer
RN^70@1111%&	1,110	1/2	C, N, R	H, J, K, C, E	B, D	S	P, R	ANG, DAL
RN^70@1131%&	1,130	1/2	C, N, R	H, J, K, C, E	B, D, F	S	P, R	ANG, DAL
RN^70@1141%&	1,140	1/2	C, N, R	H, J, K, C, E	B, D	S	P, R	ANG, DAL
RN^70@1151%&	1,150	1/2	C, N, R	H, J, K, C, E	B, D, F	S	P, R	ANG, DAL
RN^70@1171%&	1,170	1/2	C, N, R	H, J, K, C, E	B, D	S	P, R	ANG, DAL
RN^70@1181%&	1,180	1/2	C, N, R	H, J, K, C, E	B, D, F	S	P, R	ANG, DAL
RN^70@1201%&	1,200	1/2	C, N, R	H, J, K, C, E	B, D	S	P, R	ANG, DAL
RN^70@1211%&	1,210	1/2	C, N, R	H, J, K, C, E	B, D, F	S	P, R	ANG, DAL
RN^70@1231%&	1,230	1/2	C, N, R	H, J, K, C, E	B, D	S	P, R	ANG, DAL
	Resistance	Power	Term.	Char.	Resistance	Level 1	Level 2	
Part Number	Value (Ohms)	Rating (W)	Type (^)	(@)	Tolerance (%)	(FRL) (&)	(FRL) (&)	Manufacturer
RN^70@1241%&	1,240	1/2	C, N, R	H, J, K, C, E	B, D, F	S	P, R	ANG, DAL
RN^70@1261%&	1,260	1/2	C, N, R	H, J, K, C, E	B, D	S	P, R	ANG, DAL
RN^70@1271%&	1,270	1/2	C, N, R	H, J, K, C, E	B, D, F	S	P, R	ANG, DAL
RN^70@1291%&	1,290	1/2	C, N, R	H, J, K, C, E	B, D	S	P, R	ANG, DAL
RN^70@1301%&	1,300	1/2	C, N, R	H, J, K, C, E	B, D, F	S	P, R	ANG, DAL
RN^70@1321%&	1,320	1/2	C, N, R	H, J, K, C, E	B, D	S	P, R	ANG, DAL
RN^70@1331%&	1,330	1/2	C, N, R	H, J, K, C, E	B, D, F	S	P, R	ANG, DAL
RN^70@1351%&	1,350	1/2	C, N, R	H, J, K, C, E	B, D	S	P, R	ANG, DAL
RN^70@1371%&	1,370	1/2	C, N, R	H, J, K, C, E	B, D, F	S	P, R	ANG, DAL
	Resistance	Power	Term.	Char.	Resistance	Level 1	Level 2	
Part Number	Value (Ohms)	Rating (W)	Type (^)	(@)	Tolerance (%)	(FRL) (&)	(FRL) (&)	Manufacturer
RN^70@1381%&	1,380	1/2	C, N, R	H, J, K, C, E	B, D	S	P, R	ANG, DAL
RN^70@1401%&	1,400	1/2	C, N, R	H, J, K, C, E	B, D, F	S	P, R	ANG, DAL
RN^70@1421%&	1,420	1/2	C, N, R	H, J, K, C, E	B, D	S	P, R	ANG, DAL
RN^70@1431%&	1,430	1/2	C, N, R	H, J, K, C, E	B, D, F	S	P, R	ANG, DAL
RN^70@1451%&	1,450	1/2	C, N, R	H, J, K, C, E	B, D	S	P, R	ANG, DAL
RN^70@1471%&	1,470	1/2	C, N, R	H, J, K, C, E	B, D, F	S	P, R	ANG, DAL
RN^70@1491%&	1,490	1/2	C, N, R	H, J, K, C, E	B, D	S	P, R	ANG, DAL
RN^70@1501%&	1,500	1/2	C, N, R	H, J, K, C, E	B, D, F	S	P, R	ANG, DAL
RN^70@1521%&	1,520	1/2	C, N, R	H, J, K, C, E	B, D	S	P, R	ANG, DAL
	Resistance	Power	Term.	Char.	Resistance	Level 1	Level 2	

Part Number	Value (Ohms)	Rating (W)	Type (^)	(@)	Tolerance (%)	(FRL) (&)	(FRL) (&)	Manufacturer
RN^70@1541%&	1,540	1/2	C, N, R	H, J, K, C, E	B, D, F	S	P, R	ANG, DAL
RN^70@1561%&	1,560	1/2	C, N, R	H, J, K, C, E	B, D	S	P, R	ANG, DAL
RN^70@1581%&	1,580	1/2	C, N, R	H, J, K, C, E	B, D, F	S	P, R	ANG, DAL
RN^70@1601%&	1,600	1/2	C, N, R	H, J, K, C, E	B, D	S	P, R	ANG, DAL
RN^70@1621%&	1,620	1/2	C, N, R	H, J, K, C, E	B, D, F	S	P, R	ANG, DAL
RN^70@1641%&	1,640	1/2	C, N, R	H, J, K, C, E	B, D	S	P, R	ANG, DAL
RN^70@1651%&	1,650	1/2	C, N, R	H, J, K, C, E	B, D, F	S	P, R	ANG, DAL
RN^70@1671%&	1,670	1/2	C, N, R	H, J, K, C, E	B, D	S	P, R	ANG, DAL
RN^70@1691%&	1,690	1/2	C, N, R	H, J, K, C, E	B, D, F	S	P, R	ANG, DAL
	Resistance	Power	Term.	Char.	Resistance	Level 1	Level 2	
Part Number	Value (Ohms)	Rating (W)	Type (^)	(@)	Tolerance (%)	(FRL) (&)	(FRL) (&)	Manufacturer
RN^70@1721%&	1,720	1/2	C, N, R	H, J, K, C, E	B, D	S	P, R	ANG, DAL
RN^70@1741%&	1,740	1/2	C, N, R	H, J, K, C, E	B, D, F	S	P, R	ANG, DAL
RN^70@1761%&	1,760	1/2	C, N, R	H, J, K, C, E	B, D	S	P, R	ANG, DAL
RN^70@1781%&	1,780	1/2	C, N, R	H, J, K, C, E	B, D, F	S	P, R	ANG, DAL
RN^70@1801%&	1,800	1/2	C, N, R	H, J, K, C, E	B, D	S	P, R	ANG, DAL
RN^70@1821%&	1,820	1/2	C, N, R	H, J, K, C, E	B, D, F	S	P, R	ANG, DAL
RN^70@1841%&	1,840	1/2	C, N, R	H, J, K, C, E	B, D	S	P, R	ANG, DAL
RN^70@1871%&	1,870	1/2	C, N, R	H, J, K, C, E	B, D, F	S	P, R	ANG, DAL
RN^70@1891%&	1,890	1/2	C, N, R	H, J, K, C, E	B, D	S	P, R	ANG, DAL
	Resistance	Power	Term.	Char.	Resistance	Level 1	Level 2	
Part Number	Value (Ohms)	Rating (W)	Type (^)	(@)	Tolerance (%)	(FRL) (&)	(FRL) (&)	Manufacturer
RN^70@1911%&	1,910	1/2	C, N, R	H, J, K, C, E	B, D, F	S	P, R	ANG, DAL
RN^70@1931%&	1,930	1/2	C, N, R	H, J, K, C, E	B, D	S	P, R	ANG, DAL
RN^70@1961%&	1,960	1/2	C, N, R	H, J, K, C, E	B, D, F	S	P, R	ANG, DAL
RN^70@1981%&	1,980	1/2	C, N, R	H, J, K, C, E	B, D	S	P, R	ANG, DAL
RN^70@2001%&	2,000	1/2	C, N, R	H, J, K, C, E	B, D, F	S	P, R	ANG, DAL
RN^70@2031%&	2,030	1/2	C, N, R	H, J, K, C, E	B, D	S	P, R	ANG, DAL
RN^70@2051%&	2,050	1/2	C, N, R	H, J, K, C, E	B, D, F	S	P, R	ANG, DAL
RN^70@2081%&	2,080	1/2	C, N, R	H, J, K, C, E	B, D	S	P, R	ANG, DAL
RN^70@2101%&	2,100	1/2	C, N, R	H, J, K, C, E	B, D, F	S	P, R	ANG, DAL
	Resistance	Power	Term.	Char.	Resistance	Level 1	Level 2	
Part Number	Value (Ohms)	Rating (W)	Type (^)	(@)	Tolerance (%)	(FRL) (&)	(FRL) (&)	Manufacturer
	Resistance	Power	Term.	Char.	Resistance	Level 1	Level 2	
Part Number	Value (Ohms)	Rating (W)	Type (^)	(@)	Tolerance (%)	(FRL) (&)	(FRL) (&)	Manufacturer
RN^70@2131%&	2,130	1/2	C, N, R	H, J, K, C, E	B, D	S	P, R	ANG, DAL
RN^70@2151%&	2,150	1/2	C, N, R	H, J, K, C, E	B, D, F	S	P, R	ANG, DAL
RN^70@2181%&	2,180	1/2	C, N, R	H, J, K, C, E	B, D	S	P, R	ANG, DAL
RN^70@2211%&	2,210	1/2	C, N, R	H, J, K, C, E	B, D, F	S	P, R	ANG, DAL
RN^70@2231%&	2,230	1/2	C, N, R	H, J, K, C, E	B, D	S	P, R	ANG, DAL
RN^70@2261%&	2,260	1/2	C, N, R	H, J, K, C, E	B, D, F	S	P, R	ANG, DAL
RN^70@2291%&	2,290	1/2	C, N, R	H, J, K, C, E	B, D	S	P, R	ANG, DAL
RN^70@2321%&	2,320	1/2	C, N, R	H, J, K, C, E	B, D, F	S	P, R	ANG, DAL
RN^70@2341%&	2,340	1/2	C, N, R	H, J, K, C, E	B, D	S	P, R	ANG, DAL
	Resistance	Power	Term.	Char.	Resistance	Level 1	Level 2	
Part Number	Value (Ohms)	Rating (W)	Type (^)	(@)	Tolerance (%)	(FRL) (&)	(FRL) (&)	Manufacturer

RN^70@2371%&	2,370	1/2	C, N, R	H, J, K, C, E	B, D, F	S	P, R	ANG, DAL
RN^70@2401%&	2,400	1/2	C, N, R	H, J, K, C, E	B, D	S	P, R	ANG, DAL
RN^70@2431%&	2,430	1/2	C, N, R	H, J, K, C, E	B, D, F	S	P, R	ANG, DAL
RN^70@2461%&	2,460	1/2	C, N, R	H, J, K, C, E	B, D	S	P, R	ANG, DAL
RN^70@2491%&	2,490	1/2	C, N, R	H, J, K, C, E	B, D, F	S	P, R	ANG, DAL
RN^70@2521%&	2,520	1/2	C, N, R	H, J, K, C, E	B, D	S	P, R	ANG, DAL
RN^70@2551%&	2,550	1/2	C, N, R	H, J, K, C, E	B, D, F	S	P, R	ANG, DAL
RN^70@2581%&	2,580	1/2	C, N, R	H, J, K, C, E	B, D	S	P, R	ANG, DAL
RN^70@2611%&	2,610	1/2	C, N, R	H, J, K, C, E	B, D, F	S	P, R	ANG, DAL
	Resistance	Power	Term.	Char.	Resistance	Level 1	Level 2	
Part Number	Value (Ohms)	Rating (W)	Type (^)	(@)	Tolerance (%)	(FRL) (&)	(FRL) (&)	Manufacturer
RN^70@2641%&	2,640	1/2	C, N, R	H, J, K, C, E	B, D	S	P, R	ANG, DAL
RN^70@2671%&	2,670	1/2	C, N, R	H, J, K, C, E	B, D, F	S	P, R	ANG, DAL
RN^70@2711%&	2,710	1/2	C, N, R	H, J, K, C, E	B, D	S	P, R	ANG, DAL
RN^70@2741%&	2,740	1/2	C, N, R	H, J, K, C, E	B, D, F	S	P, R	ANG, DAL
RN^70@2771%&	2,770	1/2	C, N, R	H, J, K, C, E	B, D	S	P, R	ANG, DAL
RN^70@2801%&	2,800	1/2	C, N, R	H, J, K, C, E	B, D, F	S	P, R	ANG, DAL
RN^70@2841%&	2,840	1/2	C, N, R	H, J, K, C, E	B, D	S	P, R	ANG, DAL
RN^70@2871%&	2,870	1/2	C, N, R	H, J, K, C, E	B, D, F	S	P, R	ANG, DAL
RN^70@2911%&	2,910	1/2	C, N, R	H, J, K, C, E	B, D	S	P, R	ANG, DAL
	Resistance	Power	Term.	Char.	Resistance	Level 1	Level 2	
Part Number	Value (Ohms)	Rating (W)	Type (^)	(@)	Tolerance (%)	(FRL) (&)	(FRL) (&)	Manufacturer
RN^70@2941%&	2,940	1/2	C, N, R	H, J, K, C, E	B, D, F	S	P, R	ANG, DAL
RN^70@2981%&	2,980	1/2	C, N, R	H, J, K, C, E	B, D	S	P, R	ANG, DAL
RN^70@3011%&	3,010	1/2	C, N, R	H, J, K, C, E	B, D, F	S	P, R	ANG, DAL
RN^70@3051%&	3,050	1/2	C, N, R	H, J, K, C, E	B, D	S	P, R	ANG, DAL
RN^70@3091%&	3,090	1/2	C, N, R	H, J, K, C, E	B, D, F	S	P, R	ANG, DAL
RN^70@3121%&	3,120	1/2	C, N, R	H, J, K, C, E	B, D	S	P, R	ANG, DAL
RN^70@3161%&	3,160	1/2	C, N, R	H, J, K, C, E	B, D, F	S	P, R	ANG, DAL
RN^70@3201%&	3,200	1/2	C, N, R	H, J, K, C, E	B, D	S	P, R	ANG, DAL
RN^70@3241%&	3,240	1/2	C, N, R	H, J, K, C, E	B, D, F	S	P, R	ANG, DAL
	Resistance	Power	Term.	Char.	Resistance	Level 1	Level 2	
Part Number	Value (Ohms)	Rating (W)	Type (^)	(@)	Tolerance (%)	(FRL) (&)	(FRL) (&)	Manufacturer
RN^70@3281%&	3,280	1/2	C, N, R	H, J, K, C, E	B, D	S	P, R	ANG, DAL
RN^70@3321%&	3,320	1/2	C, N, R	H, J, K, C, E	B, D, F	S	P, R	ANG, DAL
RN^70@3361%&	3,360	1/2	C, N, R	H, J, K, C, E	B, D	S	P, R	ANG, DAL
RN^70@3401%&	3,400	1/2	C, N, R	H, J, K, C, E	B, D, F	S	P, R	ANG, DAL
RN^70@3441%&	3,440	1/2	C, N, R	H, J, K, C, E	B, D	S	P, R	ANG, DAL
RN^70@3481%&	3,480	1/2	C, N, R	H, J, K, C, E	B, D, F	S	P, R	ANG, DAL
RN^70@3521%&	3,520	1/2	C, N, R	H, J, K, C, E	B, D	S	P, R	ANG, DAL
RN^70@3571%&	3,570	1/2	C, N, R	H, J, K, C, E	B, D, F	S	P, R	ANG, DAL
RN^70@3611%&	3,610	1/2	C, N, R	H, J, K, C, E	B, D	S	P, R	ANG, DAL
	Resistance	Power	Term.	Char.	Resistance	Level 1	Level 2	
Part Number	Value (Ohms)	Rating (W)	Type (^)	(@)	Tolerance (%)	(FRL) (&)	(FRL) (&)	Manufacturer
RN^70@3651%&	3,650	1/2	C, N, R	H, J, K, C, E	B, D, F	S	P, R	ANG, DAL
RN^70@3701%&	3,700	1/2	C, N, R	H, J, K, C, E	B, D	S	P, R	ANG, DAL
RN^70@3741%&	3,740	1/2	C, N, R	H, J, K, C, E	B, D, F	S	P, R	ANG, DAL

RN^70@3791%&	3,790	1/2	C, N, R	H, J, K, C, E	B, D	S	P, R	ANG, DAL
RN^70@3831%&	3,830	1/2	C, N, R	H, J, K, C, E	B, D, F	S	P, R	ANG, DAL
RN^70@3881%&	3,880	1/2	C, N, R	H, J, K, C, E	B, D	S	P, R	ANG, DAL
RN^70@3921%&	3,920	1/2	C, N, R	H, J, K, C, E	B, D, F	S	P, R	ANG, DAL
RN^70@3971%&	3,970	1/2	C, N, R	H, J, K, C, E	B, D	S	P, R	ANG, DAL
RN^70@4021%&	4,020	1/2	C, N, R	H, J, K, C, E	B, D, F	S	P, R	ANG, DAL
	Resistance	Power	Term.	Char.	Resistance	Level 1	Level 2	
Part Number	Value (Ohms)	Rating (W)	Type (^)	(@)	Tolerance (%)	(FRL) (&)	(FRL) (&)	Manufacturer
	Resistance	Power	Term.	Char.	Resistance	Level 1	Level 2	
Part Number	Value (Ohms)	Rating (W)	Type (^)	(@)	Tolerance (%)	(FRL) (&)	(FRL) (&)	Manufacturer
RN^70@4071%&	4,070	1/2	C, N, R	H, J, K, C, E	B, D	S	P, R	ANG, DAL
RN^70@4121%&	4,120	1/2	C, N, R	H, J, K, C, E	B, D, F	S	P, R	ANG, DAL
RN^70@4171%&	4,170	1/2	C, N, R	H, J, K, C, E	B, D	S	P, R	ANG, DAL
RN^70@4221%&	4,220	1/2	C, N, R	H, J, K, C, E	B, D, F	S	P, R	ANG, DAL
RN^70@4271%&	4,270	1/2	C, N, R	H, J, K, C, E	B, D	S	P, R	ANG, DAL
RN^70@4321%&	4,320	1/2	C, N, R	H, J, K, C, E	B, D, F	S	P, R	ANG, DAL
RN^70@4371%&	4,370	1/2	C, N, R	H, J, K, C, E	B, D	S	P, R	ANG, DAL
RN^70@4421%&	4,420	1/2	C, N, R	H, J, K, C, E	B, D, F	S	P, R	ANG, DAL
RN^70@4481%&	4,480	1/2	C, N, R	H, J, K, C, E	B, D	S	P, R	ANG, DAL
	Resistance	Power	Term.	Char.	Resistance	Level 1	Level 2	
Part Number	Value (Ohms)	Rating (W)	Type (^)	(@)	Tolerance (%)	(FRL) (&)	(FRL) (&)	Manufacturer
RN^70@4531%&	4,530	1/2	C, N, R	H, J, K, C, E	B, D, F	S	P, R	ANG, DAL
RN^70@4591%&	4,590	1/2	C, N, R	H, J, K, C, E	B, D	S	P, R	ANG, DAL
RN^70@4641%&	4,640	1/2	C, N, R	H, J, K, C, E	B, D, F	S	P, R	ANG, DAL
RN^70@4701%&	4,700	1/2	C, N, R	H, J, K, C, E	B, D	S	P, R	ANG, DAL
RN^70@4751%&	4,750	1/2	C, N, R	H, J, K, C, E	B, D, F	S	P, R	ANG, DAL
RN^70@4811%&	4,810	1/2	C, N, R	H, J, K, C, E	B, D	S	P, R	ANG, DAL
RN^70@4871%&	4,870	1/2	C, N, R	H, J, K, C, E	B, D, F	S	P, R	ANG, DAL
RN^70@4931%&	4,930	1/2	C, N, R	H, J, K, C, E	B, D	S	P, R	ANG, DAL
RN^70@4991%&	4,990	1/2	C, N, R	H, J, K, C, E	B, D, F	S	P, R	ANG, DAL
	Resistance	Power	Term.	Char.	Resistance	Level 1	Level 2	
Part Number	Value (Ohms)	Rating (W)	Type (^)	(@)	Tolerance (%)	(FRL) (&)	(FRL) (&)	Manufacturer
RN^70@5051%&	5,050	1/2	C, N, R	H, J, K, C, E	B, D	S	P, R	ANG, DAL
RN^70@5111%&	5,110	1/2	C, N, R	H, J, K, C, E	B, D, F	S	P, R	ANG, DAL
RN^70@5171%&	5,170	1/2	C, N, R	H, J, K, C, E	B, D	S	P, R	ANG, DAL
RN^70@5231%&	5,230	1/2	C, N, R	H, J, K, C, E	B, D, F	S	P, R	ANG, DAL
RN^70@5301%&	5,300	1/2	C, N, R	H, J, K, C, E	B, D	S	P, R	ANG, DAL
RN^70@5361%&	5,360	1/2	C, N, R	H, J, K, C, E	B, D, F	S	P, R	ANG, DAL
RN^70@5421%&	5,420	1/2	C, N, R	H, J, K, C, E	B, D	S	P, R	ANG, DAL
RN^70@5491%&	5,490	1/2	C, N, R	H, J, K, C, E	B, D, F	S	P, R	ANG, DAL
RN^70@5561%&	5,560	1/2	C, N, R	H, J, K, C, E	B, D	S	P, R	ANG, DAL
	Resistance	Power	Term.	Char.	Resistance	Level 1	Level 2	
Part Number	Value (Ohms)	Rating (W)	Type (^)	(@)	Tolerance (%)	(FRL) (&)	(FRL) (&)	Manufacturer
RN^70@5621%&	5,620	1/2	C, N, R	H, J, K, C, E	B, D, F	S	P, R	ANG, DAL
RN^70@5691%&	5,690	1/2	C, N, R	H, J, K, C, E	B, D	S	P, R	ANG, DAL
RN^70@5761%&	5,760	1/2	C, N, R	H, J, K, C, E	B, D, F	S	P, R	ANG, DAL
RN^70@5831%&	5,830	1/2	C, N, R	H, J, K, C, E	B, D	S	P, R	ANG, DAL

RN^70@5901%&	5,900	1/2	C, N, R	H, J, K, C, E	B, D, F	S	P, R	ANG, DAL
RN^70@5971%&	5,970	1/2	C, N, R	H, J, K, C, E	B, D	S	P, R	ANG, DAL
RN^70@6041%&	6,040	1/2	C, N, R	H, J, K, C, E	B, D, F	S	P, R	ANG, DAL
RN^70@6121%&	6,120	1/2	C, N, R	H, J, K, C, E	B, D	S	P, R	ANG, DAL
RN^70@6191%&	6,190	1/2	C, N, R	H, J, K, C, E	B, D, F	S	P, R	ANG, DAL
	Resistance	Power	Term.	Char.	Resistance	Level 1	Level 2	
Part Number	Value (Ohms)	Rating (W)	Type (^)	(@)	Tolerance (%)	(FRL) (&)	(FRL) (&)	Manufacturer
RN^70@6261%&	6,260	1/2	C, N, R	H, J, K, C, E	B, D	S	P, R	ANG, DAL
RN^70@6341%&	6,340	1/2	C, N, R	H, J, K, C, E	B, D, F	S	P, R	ANG, DAL
RN^70@6421%&	6,420	1/2	C, N, R	H, J, K, C, E	B, D	S	P, R	ANG, DAL
RN^70@6491%&	6,490	1/2	C, N, R	H, J, K, C, E	B, D, F	S	P, R	ANG, DAL
RN^70@6571%&	6,570	1/2	C, N, R	H, J, K, C, E	B, D	S	P, R	ANG, DAL
RN^70@6651%&	6,650	1/2	C, N, R	H, J, K, C, E	B, D, F	S	P, R	ANG, DAL
RN^70@6731%&	6,730	1/2	C, N, R	H, J, K, C, E	B, D	S	P, R	ANG, DAL
RN^70@6811%&	6,810	1/2	C, N, R	H, J, K, C, E	B, D, F	S	P, R	ANG, DAL
RN^70@6901%&	6,900	1/2	C, N, R	H, J, K, C, E	B, D	S	P, R	ANG, DAL
	Resistance	Power	Term.	Char.	Resistance	Level 1	Level 2	
Part Number	Value (Ohms)	Rating (W)	Type (^)	(@)	Tolerance (%)	(FRL) (&)	(FRL) (&)	Manufacturer
RN^70@6981%&	6,980	1/2	C, N, R	H, J, K, C, E	B, D, F	S	P, R	ANG, DAL
RN^70@7061%&	7,060	1/2	C, N, R	H, J, K, C, E	B, D	S	P, R	ANG, DAL
RN^70@7151%&	7,150	1/2	C, N, R	H, J, K, C, E	B, D, F	S	P, R	ANG, DAL
RN^70@7231%&	7,230	1/2	C, N, R	H, J, K, C, E	B, D	S	P, R	ANG, DAL
RN^70@7321%&	7,320	1/2	C, N, R	H, J, K, C, E	B, D, F	S	P, R	ANG, DAL
RN^70@7411%&	7,410	1/2	C, N, R	H, J, K, C, E	B, D	S	P, R	ANG, DAL
RN^70@7501%&	7,500	1/2	C, N, R	H, J, K, C, E	B, D, F	S	P, R	ANG, DAL
RN^70@7591%&	7,590	1/2	C, N, R	H, J, K, C, E	B, D	S	P, R	ANG, DAL
RN^70@7681%&	7,680	1/2	C, N, R	H, J, K, C, E	B, D, F	S	P, R	ANG, DAL
	Resistance	Power	Term.	Char.	Resistance	Level 1	Level 2	
Part Number	Value (Ohms)	Rating (W)	Type (^)	(@)	Tolerance (%)	(FRL) (&)	(FRL) (&)	Manufacturer
	Resistance	Power	Term.	Char.	Resistance	Level 1	Level 2	
Part Number	Value (Ohms)	Rating (W)	Type (^)	(@)	Tolerance (%)	(FRL) (&)	(FRL) (&)	Manufacturer
RN^70@7771%&	7,770	1/2	C, N, R	H, J, K, C, E	B, D	S	P, R	ANG, DAL
RN^70@7871%&	7,870	1/2	C, N, R	H, J, K, C, E	B, D, F	S	P, R	ANG, DAL
RN^70@7961%&	7,960	1/2	C, N, R	H, J, K, C, E	B, D	S	P, R	ANG, DAL
RN^70@8061%&	8,060	1/2	C, N, R	H, J, K, C, E	B, D, F	S	P, R	ANG, DAL
RN^70@8161%&	8,160	1/2	C, N, R	H, J, K, C, E	B, D	S	P, R	ANG, DAL
RN^70@8251%&	8,250	1/2	C, N, R	H, J, K, C, E	B, D, F	S	P, R	ANG, DAL
RN^70@8351%&	8,350	1/2	C, N, R	H, J, K, C, E	B, D	S	P, R	ANG, DAL
RN^70@8451%&	8,450	1/2	C, N, R	H, J, K, C, E	B, D, F	S	P, R	ANG, DAL
RN^70@8561%&	8,560	1/2	C, N, R	H, J, K, C, E	B, D	S	P, R	ANG, DAL
	Resistance	Power	Term.	Char.	Resistance	Level 1	Level 2	
Part Number	Value (Ohms)	Rating (W)	Type (^)	(@)	Tolerance (%)	(FRL) (&)	(FRL) (&)	Manufacturer
RN^70@8661%&	8,660	1/2	C, N, R	H, J, K, C, E	B, D, F	S	P, R	ANG, DAL
RN^70@8761%&	8,760	1/2	C, N, R	H, J, K, C, E	B, D	S	P, R	ANG, DAL
RN^70@8871%&	8,870	1/2	C, N, R	H, J, K, C, E	B, D, F	S	P, R	ANG, DAL
RN^70@8981%&	8,980	1/2	C, N, R	H, J, K, C, E	B, D	S	P, R	ANG, DAL
RN^70@9091%&	9,090	1/2	C, N, R	H, J, K, C, E	B, D, F	S	P, R	ANG, DAL

RN^70@9201%&	9,200	1/2	C, N, R	H, J, K, C, E	B, D	S	P, R	ANG, DAL
RN^70@9311%&	9,310	1/2	C, N, R	H, J, K, C, E	B, D, F	S	P, R	ANG, DAL
RN^70@9421%&	9,420	1/2	C, N, R	H, J, K, C, E	B, D	S	P, R	ANG, DAL
RN^70@9531%&	9,530	1/2	C, N, R	H, J, K, C, E	B, D, F	S	P, R	ANG, DAL
	Resistance	Power	Term.	Char.	Resistance	Level 1	Level 2	
Part Number	Value (Ohms)	Rating (W)	Type (^)	(@)	Tolerance (%)	(FRL) (&)	(FRL) (&)	Manufacturer
RN^70@9651%&	9,650	1/2	C, N, R	H, J, K, C, E	B, D	S	P, R	ANG, DAL
RN^70@9761%&	9,760	1/2	C, N, R	H, J, K, C, E	B, D, F	S	P, R	ANG, DAL
RN^70@9881%&	9,880	1/2	C, N, R	H, J, K, C, E	B, D	S	P, R	ANG, DAL
	Resistance	Power	Term.	Char.	Resistance	Level 1	Level 2	
Part Number	Value (Ohms)	Rating (W)	Type (^)	(@)	Tolerance (%)	(FRL) (&)	(FRL) (&)	Manufacturer
	Resistance	Power	Term.	Char.	Resistance	Level 1	Level 2	
Part Number	Value (Ohms)	Rating (W)	Type (^)	(@)	Tolerance (%)	(FRL) (&)	(FRL) (&)	Manufacturer
	Resistance	Power	Term.	Char.	Resistance	Level 1	Level 2	
Part Number	Value (Ohms)	Rating (W)	Type (^)	(@)	Tolerance (%)	(FRL) (&)	(FRL) (&)	Manufacturer

RN^70 Film Resistors: 10,000 Ohms through 98,800 Ohms

	Resistance	Power	Term.	Char.	Resistance	Level 1	Level 2	
Part Number	Value (Ohms)	Rating (W)	Type (^)	(@)	Tolerance (%)	(FRL) (&)	(FRL) (&)	Manufacturer
RN^70@1002%&	10,000	1/2	C, N, R	H, J, K, C, E	B, D, F	S	P, R	ANG, DAL
RN^70@1012%&	10,100	1/2	C, N, R	H, J, K, C, E	B, D	S	P, R	ANG, DAL
RN^70@1022%&	10,200	1/2	C, N, R	H, J, K, C, E	B, D, F	S	P, R	ANG, DAL
RN^70@1042%&	10,400	1/2	C, N, R	H, J, K, C, E	B, D	S	P, R	ANG, DAL
RN^70@1052%&	10,500	1/2	C, N, R	H, J, K, C, E	B, D, F	S	P, R	ANG, DAL
RN^70@1062%&	10,600	1/2	C, N, R	H, J, K, C, E	B, D	S	P, R	ANG, DAL
RN^70@1072%&	10,700	1/2	C, N, R	H, J, K, C, E	B, D, F	S	P, R	ANG, DAL
RN^70@1092%&	10,900	1/2	C, N, R	H, J, K, C, E	B, D	S	P, R	ANG, DAL
RN^70@1102%&	11,000	1/2	C, N, R	H, J, K, C, E	B, D, F	S	P, R	ANG, DAL
	Resistance	Power	Term.	Char.	Resistance	Level 1	Level 2	
Part Number	Value (Ohms)	Rating (W)	Type (^)	(@)	Tolerance (%)	(FRL) (&)	(FRL) (&)	Manufacturer
RN^70@1112%&	11,100	1/2	C, N, R	H, J, K, C, E	B, D	S	P, R	ANG, DAL
RN^70@1132%&	11,300	1/2	C, N, R	H, J, K, C, E	B, D, F	S	P, R	ANG, DAL
RN^70@1142%&	11,400	1/2	C, N, R	H, J, K, C, E	B, D	S	P, R	ANG, DAL
RN^70@1152%&	11,500	1/2	C, N, R	H, J, K, C, E	B, D, F	S	P, R	ANG, DAL
RN^70@1172%&	11,700	1/2	C, N, R	H, J, K, C, E	B, D	S	P, R	ANG, DAL
RN^70@1182%&	11,800	1/2	C, N, R	H, J, K, C, E	B, D, F	S	P, R	ANG, DAL
RN^70@1202%&	12,000	1/2	C, N, R	H, J, K, C, E	B, D	S	P, R	ANG, DAL
RN^70@1212%&	12,100	1/2	C, N, R	H, J, K, C, E	B, D, F	S	P, R	ANG, DAL
RN^70@1232%&	12,300	1/2	C, N, R	H, J, K, C, E	B, D	S	P, R	ANG, DAL
	Resistance	Power	Term.	Char.	Resistance	Level 1	Level 2	
Part Number	Value (Ohms)	Rating (W)	Type (^)	(@)	Tolerance (%)	(FRL) (&)	(FRL) (&)	Manufacturer
RN^70@1242%&	12,400	1/2	C, N, R	H, J, K, C, E	B, D, F	S	P, R	ANG, DAL
RN^70@1262%&	12,600	1/2	C, N, R	H, J, K, C, E	B, D	S	P, R	ANG, DAL
RN^70@1272%&	12,700	1/2	C, N, R	H, J, K, C, E	B, D, F	S	P, R	ANG, DAL

RN^70@1292%&	12,900	1/2	C, N, R	H, J, K, C, E	B, D	S	P, R	ANG, DAL
RN^70@1302%&	13,000	1/2	C, N, R	H, J, K, C, E	B, D, F	S	P, R	ANG, DAL
RN^70@1322%&	13,200	1/2	C, N, R	H, J, K, C, E	B, D	S	P, R	ANG, DAL
RN^70@1332%&	13,300	1/2	C, N, R	H, J, K, C, E	B, D, F	S	P, R	ANG, DAL
RN^70@1352%&	13,500	1/2	C, N, R	H, J, K, C, E	B, D	S	P, R	ANG, DAL
RN^70@1372%&	13,700	1/2	C, N, R	H, J, K, C, E	B, D, F	S	P, R	ANG, DAL
	Resistance	Power	Term.	Char.	Resistance	Level 1	Level 2	
Part Number	Value (Ohms)	Rating (W)	Type (^)	(@)	Tolerance (%)	(FRL) (&)	(FRL) (&)	Manufacturer
RN^70@1382%&	13,800	1/2	C, N, R	H, J, K, C, E	B, D	S	P, R	ANG, DAL
RN^70@1402%&	14,000	1/2	C, N, R	H, J, K, C, E	B, D, F	S	P, R	ANG, DAL
RN^70@1422%&	14,200	1/2	C, N, R	H, J, K, C, E	B, D	S	P, R	ANG, DAL
RN^70@1432%&	14,300	1/2	C, N, R	H, J, K, C, E	B, D, F	S	P, R	ANG, DAL
RN^70@1452%&	14,500	1/2	C, N, R	H, J, K, C, E	B, D	S	P, R	ANG, DAL
RN^70@1472%&	14,700	1/2	C, N, R	H, J, K, C, E	B, D, F	S	P, R	ANG, DAL
RN^70@1492%&	14,900	1/2	C, N, R	H, J, K, C, E	B, D	S	P, R	ANG, DAL
RN^70@1502%&	15,000	1/2	C, N, R	H, J, K, C, E	B, D, F	S	P, R	ANG, DAL
RN^70@1522%&	15,200	1/2	C, N, R	H, J, K, C, E	B, D	S	P, R	ANG, DAL
	Resistance	Power	Term.	Char.	Resistance	Level 1	Level 2	
Part Number	Value (Ohms)	Rating (W)	Type (^)	(@)	Tolerance (%)	(FRL) (&)	(FRL) (&)	Manufacturer
RN^70@1542%&	15,400	1/2	C, N, R	H, J, K, C, E	B, D, F	S	P, R	ANG, DAL
RN^70@1562%&	15,600	1/2	C, N, R	H, J, K, C, E	B, D	S	P, R	ANG, DAL
RN^70@1582%&	15,800	1/2	C, N, R	H, J, K, C, E	B, D, F	S	P, R	ANG, DAL
RN^70@1602%&	16,000	1/2	C, N, R	H, J, K, C, E	B, D	S	P, R	ANG, DAL
RN^70@1622%&	16,200	1/2	C, N, R	H, J, K, C, E	B, D, F	S	P, R	ANG, DAL
RN^70@1642%&	16,400	1/2	C, N, R	H, J, K, C, E	B, D	S	P, R	ANG, DAL
RN^70@1652%&	16,500	1/2	C, N, R	H, J, K, C, E	B, D, F	S	P, R	ANG, DAL
RN^70@1672%&	16,700	1/2	C, N, R	H, J, K, C, E	B, D	S	P, R	ANG, DAL
RN^70@1692%&	16,900	1/2	C, N, R	H, J, K, C, E	B, D, F	S	P, R	ANG, DAL
	Resistance	Power	Term.	Char.	Resistance	Level 1	Level 2	
Part Number	Value (Ohms)	Rating (W)	Type (^)	(@)	Tolerance (%)	(FRL) (&)	(FRL) (&)	Manufacturer
RN^70@1722%&	17,200	1/2	C, N, R	H, J, K, C, E	B, D	S	P, R	ANG, DAL
RN^70@1742%&	17,400	1/2	C, N, R	H, J, K, C, E	B, D, F	S	P, R	ANG, DAL
RN^70@1762%&	17,600	1/2	C, N, R	H, J, K, C, E	B, D	S	P, R	ANG, DAL
RN^70@1782%&	17,800	1/2	C, N, R	H, J, K, C, E	B, D, F	S	P, R	ANG, DAL
RN^70@1802%&	18,000	1/2	C, N, R	H, J, K, C, E	B, D	S	P, R	ANG, DAL
RN^70@1822%&	18,200	1/2	C, N, R	H, J, K, C, E	B, D, F	S	P, R	ANG, DAL
RN^70@1842%&	18,400	1/2	C, N, R	H, J, K, C, E	B, D	S	P, R	ANG, DAL
RN^70@1872%&	18,700	1/2	C, N, R	H, J, K, C, E	B, D, F	S	P, R	ANG, DAL
RN^70@1892%&	18,900	1/2	C, N, R	H, J, K, C, E	B, D	S	P, R	ANG, DAL
	Resistance	Power	Term.	Char.	Resistance	Level 1	Level 2	
Part Number	Value (Ohms)	Rating (W)	Type (^)	(@)	Tolerance (%)	(FRL) (&)	(FRL) (&)	Manufacturer
RN^70@1912%&	19,100	1/2	C, N, R	H, J, K, C, E	B, D, F	S	P, R	ANG, DAL
RN^70@1932%&	19,300	1/2	C, N, R	H, J, K, C, E	B, D	S	P, R	ANG, DAL
RN^70@1962%&	19,600	1/2	C, N, R	H, J, K, C, E	B, D, F	S	P, R	ANG, DAL
RN^70@1982%&	19,800	1/2	C, N, R	H, J, K, C, E	B, D	S	P, R	ANG, DAL
RN^70@2002%&	20,000	1/2	C, N, R	H, J, K, C, E	B, D, F	S	P, R	ANG, DAL
RN^70@2032%&	20,300	1/2	C, N, R	H, J, K, C, E	B, D	S	P, R	ANG, DAL

RN^70@2052%&	20,500	1/2	C, N, R	H, J, K, C, E	B, D, F	S	P, R	ANG, DAL
RN^70@2082%&	20,800	1/2	C, N, R	H, J, K, C, E	B, D	S	P, R	ANG, DAL
RN^70@2102%&	21,000	1/2	C, N, R	H, J, K, C, E	B, D, F	S	P, R	ANG, DAL
	Resistance	Power	Term.	Char.	Resistance	Level 1	Level 2	
Part Number	Value (Ohms)	Rating (W)	Type (^)	(@)	Tolerance (%)	(FRL) (&)	(FRL) (&)	Manufacturer
	Resistance	Power	Term.	Char.	Resistance	Level 1	Level 2	
Part Number	Value (Ohms)	Rating (W)	Type (^)	(@)	Tolerance (%)	(FRL) (&)	(FRL) (&)	Manufacturer
RN^70@2132%&	21,300	1/2	C, N, R	H, J, K, C, E	B, D	S	P, R	ANG, DAL
RN^70@2152%&	21,500	1/2	C, N, R	H, J, K, C, E	B, D, F	S	P, R	ANG, DAL
RN^70@2182%&	21,800	1/2	C, N, R	H, J, K, C, E	B, D	S	P, R	ANG, DAL
RN^70@2212%&	22,100	1/2	C, N, R	H, J, K, C, E	B, D, F	S	P, R	ANG, DAL
RN^70@2232%&	22,300	1/2	C, N, R	H, J, K, C, E	B, D	S	P, R	ANG, DAL
RN^70@2262%&	22,600	1/2	C, N, R	H, J, K, C, E	B, D, F	S	P, R	ANG, DAL
RN^70@2292%&	22,900	1/2	C, N, R	H, J, K, C, E	B, D	S	P, R	ANG, DAL
RN^70@2322%&	23,200	1/2	C, N, R	H, J, K, C, E	B, D, F	S	P, R	ANG, DAL
RN^70@2342%&	23,400	1/2	C, N, R	H, J, K, C, E	B, D	S	P, R	ANG, DAL
	Resistance	Power	Term.	Char.	Resistance	Level 1	Level 2	
Part Number	Value (Ohms)	Rating (W)	Type (^)	(@)	Tolerance (%)	(FRL) (&)	(FRL) (&)	Manufacturer
RN^70@2372%&	23,700	1/2	C, N, R	H, J, K, C, E	B, D, F	S	P, R	ANG, DAL
RN^70@2402%&	24,000	1/2	C, N, R	H, J, K, C, E	B, D	S	P, R	ANG, DAL
RN^70@2432%&	24,300	1/2	C, N, R	H, J, K, C, E	B, D, F	S	P, R	ANG, DAL
RN^70@2462%&	24,600	1/2	C, N, R	H, J, K, C, E	B, D	S	P, R	ANG, DAL
RN^70@2492%&	24,900	1/2	C, N, R	H, J, K, C, E	B, D, F	S	P, R	ANG, DAL
RN^70@2522%&	25,200	1/2	C, N, R	H, J, K, C, E	B, D	S	P, R	ANG, DAL
RN^70@2552%&	25,500	1/2	C, N, R	H, J, K, C, E	B, D, F	S	P, R	ANG, DAL
RN^70@2582%&	25,800	1/2	C, N, R	H, J, K, C, E	B, D	S	P, R	ANG, DAL
RN^70@2612%&	26,100	1/2	C, N, R	H, J, K, C, E	B, D, F	S	P, R	ANG, DAL
	Resistance	Power	Term.	Char.	Resistance	Level 1	Level 2	
Part Number	Value (Ohms)	Rating (W)	Type (^)	(@)	Tolerance (%)	(FRL) (&)	(FRL) (&)	Manufacturer
RN^70@2642%&	26,400	1/2	C, N, R	H, J, K, C, E	B, D	S	P, R	ANG, DAL
RN^70@2672%&	26,700	1/2	C, N, R	H, J, K, C, E	B, D, F	S	P, R	ANG, DAL
RN^70@2712%&	27,100	1/2	C, N, R	H, J, K, C, E	B, D	S	P, R	ANG, DAL
RN^70@2742%&	27,400	1/2	C, N, R	H, J, K, C, E	B, D, F	S	P, R	ANG, DAL
RN^70@2772%&	27,700	1/2	C, N, R	H, J, K, C, E	B, D	S	P, R	ANG, DAL
RN^70@2802%&	28,000	1/2	C, N, R	H, J, K, C, E	B, D, F	S	P, R	ANG, DAL
RN^70@2842%&	28,400	1/2	C, N, R	H, J, K, C, E	B, D	S	P, R	ANG, DAL
RN^70@2872%&	28,700	1/2	C, N, R	H, J, K, C, E	B, D, F	S	P, R	ANG, DAL
RN^70@2912%&	29,100	1/2	C, N, R	H, J, K, C, E	B, D	S	P, R	ANG, DAL
	Resistance	Power	Term.	Char.	Resistance	Level 1	Level 2	
Part Number	Value (Ohms)	Rating (W)	Type (^)	(@)	Tolerance (%)	(FRL) (&)	(FRL) (&)	Manufacturer
RN^70@2942%&	29,400	1/2	C, N, R	H, J, K, C, E	B, D, F	S	P, R	ANG, DAL
RN^70@2982%&	29,800	1/2	C, N, R	H, J, K, C, E	B, D	S	P, R	ANG, DAL
RN^70@3012%&	30,100	1/2	C, N, R	H, J, K, C, E	B, D, F	S	P, R	ANG, DAL
RN^70@3052%&	30,500	1/2	C, N, R	H, J, K, C, E	B, D	S	P, R	ANG, DAL
RN^70@3092%&	30,900	1/2	C, N, R	H, J, K, C, E	B, D, F	S	P, R	ANG, DAL
RN^70@3122%&	31,200	1/2	C, N, R	H, J, K, C, E	B, D	S	P, R	ANG, DAL
RN^70@3162%&	31,600	1/2	C, N, R	H, J, K, C, E	B, D, F	S	P, R	ANG, DAL

RN^70@3202%&	32,000	1/2	C, N, R	H, J, K, C, E	B, D	S	P, R	ANG, DAL
RN^70@3242%&	32,400	1/2	C, N, R	H, J, K, C, E	B, D, F	S	P, R	ANG, DAL
	Resistance	Power	Term.	Char.	Resistance	Level 1	Level 2	
Part Number	Value (Ohms)	Rating (W)	Type (^)	(@)	Tolerance (%)	(FRL) (&)	(FRL) (&)	Manufacturer
RN^70@3282%&	32,800	1/2	C, N, R	H, J, K, C, E	B, D	S	P, R	ANG, DAL
RN^70@3322%&	33,200	1/2	C, N, R	H, J, K, C, E	B, D, F	S	P, R	ANG, DAL
RN^70@3362%&	33,600	1/2	C, N, R	H, J, K, C, E	B, D	S	P, R	ANG, DAL
RN^70@3402%&	34,000	1/2	C, N, R	H, J, K, C, E	B, D, F	S	P, R	ANG, DAL
RN^70@3442%&	34,400	1/2	C, N, R	H, J, K, C, E	B, D	S	P, R	ANG, DAL
RN^70@3482%&	34,800	1/2	C, N, R	H, J, K, C, E	B, D, F	S	P, R	ANG, DAL
RN^70@3522%&	35,200	1/2	C, N, R	H, J, K, C, E	B, D	S	P, R	ANG, DAL
RN^70@3572%&	35,700	1/2	C, N, R	H, J, K, C, E	B, D, F	S	P, R	ANG, DAL
RN^70@3612%&	36,100	1/2	C, N, R	H, J, K, C, E	B, D	S	P, R	ANG, DAL
	Resistance	Power	Term.	Char.	Resistance	Level 1	Level 2	
Part Number	Value (Ohms)	Rating (W)	Type (^)	(@)	Tolerance (%)	(FRL) (&)	(FRL) (&)	Manufacturer
RN^70@3652%&	36,500	1/2	C, N, R	H, J, K, C, E	B, D, F	S	P, R	ANG, DAL
RN^70@3702%&	37,000	1/2	C, N, R	H, J, K, C, E	B, D	S	P, R	ANG, DAL
RN^70@3742%&	37,400	1/2	C, N, R	H, J, K, C, E	B, D, F	S	P, R	ANG, DAL
RN^70@3792%&	37,900	1/2	C, N, R	H, J, K, C, E	B, D	S	P, R	ANG, DAL
RN^70@3832%&	38,300	1/2	C, N, R	H, J, K, C, E	B, D, F	S	P, R	ANG, DAL
RN^70@3882%&	38,800	1/2	C, N, R	H, J, K, C, E	B, D	S	P, R	ANG, DAL
RN^70@3922%&	39,200	1/2	C, N, R	H, J, K, C, E	B, D, F	S	P, R	ANG, DAL
RN^70@3972%&	39,700	1/2	C, N, R	H, J, K, C, E	B, D	S	P, R	ANG, DAL
RN^70@4022%&	40,200	1/2	C, N, R	H, J, K, C, E	B, D, F	S	P, R	ANG, DAL
	Resistance	Power	Term.	Char.	Resistance	Level 1	Level 2	
Part Number	Value (Ohms)	Rating (W)	Type (^)	(@)	Tolerance (%)	(FRL) (&)	(FRL) (&)	Manufacturer
	Resistance	Power	Term.	Char.	Resistance	Level 1	Level 2	
Part Number	Value (Ohms)	Rating (W)	Type (^)	(@)	Tolerance (%)	(FRL) (&)	(FRL) (&)	Manufacturer
RN^70@4072%&	40,700	1/2	C, N, R	H, J, K, C, E	B, D	S	P, R	ANG, DAL
RN^70@4122%&	41,200	1/2	C, N, R	H, J, K, C, E	B, D, F	S	P, R	ANG, DAL
RN^70@4172%&	41,700	1/2	C, N, R	H, J, K, C, E	B, D	S	P, R	ANG, DAL
RN^70@4222%&	42,200	1/2	C, N, R	H, J, K, C, E	B, D, F	S	P, R	ANG, DAL
RN^70@4272%&	42,700	1/2	C, N, R	H, J, K, C, E	B, D	S	P, R	ANG, DAL
RN^70@4322%&	43,200	1/2	C, N, R	H, J, K, C, E	B, D, F	S	P, R	ANG, DAL
RN^70@4372%&	43,700	1/2	C, N, R	H, J, K, C, E	B, D	S	P, R	ANG, DAL
RN^70@4422%&	44,200	1/2	C, N, R	H, J, K, C, E	B, D, F	S	P, R	ANG, DAL
RN^70@4482%&	44,800	1/2	C, N, R	H, J, K, C, E	B, D	S	P, R	ANG, DAL
	Resistance	Power	Term.	Char.	Resistance	Level 1	Level 2	
Part Number	Value (Ohms)	Rating (W)	Type (^)	(@)	Tolerance (%)	(FRL) (&)	(FRL) (&)	Manufacturer
RN^70@4532%&	45,300	1/2	C, N, R	H, J, K, C, E	B, D, F	S	P, R	ANG, DAL
RN^70@4592%&	45,900	1/2	C, N, R	H, J, K, C, E	B, D	S	P, R	ANG, DAL
RN^70@4642%&	46,400	1/2	C, N, R	H, J, K, C, E	B, D, F	S	P, R	ANG, DAL
RN^70@4702%&	47,000	1/2	C, N, R	H, J, K, C, E	B, D	S	P, R	ANG, DAL
RN^70@4752%&	47,500	1/2	C, N, R	H, J, K, C, E	B, D, F	S	P, R	ANG, DAL
RN^70@4812%&	48,100	1/2	C, N, R	H, J, K, C, E	B, D	S	P, R	ANG, DAL
RN^70@4872%&	48,700	1/2	C, N, R	H, J, K, C, E	B, D, F	S	P, R	ANG, DAL
RN^70@4932%&	49,300	1/2	C, N, R	H, J, K, C, E	B, D	S	P, R	ANG, DAL

RN^70@4992%&	49,900	1/2	C, N, R	H, J, K, C, E	B, D, F	S	P, R	ANG, DAL
	Resistance	Power	Term.	Char.	Resistance	Level 1	Level 2	
Part Number	Value (Ohms)	Rating (W)	Type (^)	(@)	Tolerance (%)	(FRL) (&)	(FRL) (&)	Manufacturer
RN^70@5052%&	50,500	1/2	C, N, R	H, J, K, C, E	B, D	S	P, R	ANG, DAL
RN^70@5112%&	51,100	1/2	C, N, R	H, J, K, C, E	B, D, F	S	P, R	ANG, DAL
RN^70@5172%&	51,700	1/2	C, N, R	H, J, K, C, E	B, D	S	P, R	ANG, DAL
RN^70@5232%&	52,300	1/2	C, N, R	H, J, K, C, E	B, D, F	S	P, R	ANG, DAL
RN^70@5302%&	53,000	1/2	C, N, R	H, J, K, C, E	B, D	S	P, R	ANG, DAL
RN^70@5362%&	53,600	1/2	C, N, R	H, J, K, C, E	B, D, F	S	P, R	ANG, DAL
RN^70@5422%&	54,200	1/2	C, N, R	H, J, K, C, E	B, D	S	P, R	ANG, DAL
RN^70@5492%&	54,900	1/2	C, N, R	H, J, K, C, E	B, D, F	S	P, R	ANG, DAL
RN^70@5562%&	55,600	1/2	C, N, R	H, J, K, C, E	B, D	S	P, R	ANG, DAL
	Resistance	Power	Term.	Char.	Resistance	Level 1	Level 2	
Part Number	Value (Ohms)	Rating (W)	Type (^)	(@)	Tolerance (%)	(FRL) (&)	(FRL) (&)	Manufacturer
RN^70@5622%&	56,200	1/2	C, N, R	H, J, K, C, E	B, D, F	S	P, R	ANG, DAL
RN^70@5692%&	56,900	1/2	C, N, R	H, J, K, C, E	B, D	S	P, R	ANG, DAL
RN^70@5762%&	57,600	1/2	C, N, R	H, J, K, C, E	B, D, F	S	P, R	ANG, DAL
RN^70@5832%&	58,300	1/2	C, N, R	H, J, K, C, E	B, D	S	P, R	ANG, DAL
RN^70@5902%&	59,000	1/2	C, N, R	H, J, K, C, E	B, D, F	S	P, R	ANG, DAL
RN^70@5972%&	59,700	1/2	C, N, R	H, J, K, C, E	B, D	S	P, R	ANG, DAL
RN^70@6042%&	60,400	1/2	C, N, R	H, J, K, C, E	B, D, F	S	P, R	ANG, DAL
RN^70@6122%&	61,200	1/2	C, N, R	H, J, K, C, E	B, D	S	P, R	ANG, DAL
RN^70@6192%&	61,900	1/2	C, N, R	H, J, K, C, E	B, D, F	S	P, R	ANG, DAL
	Resistance	Power	Term.	Char.	Resistance	Level 1	Level 2	
Part Number	Value (Ohms)	Rating (W)	Type (^)	(@)	Tolerance (%)	(FRL) (&)	(FRL) (&)	Manufacturer
RN^70@6262%&	62,600	1/2	C, N, R	H, J, K, C, E	B, D	S	P, R	ANG, DAL
RN^70@6342%&	63,400	1/2	C, N, R	H, J, K, C, E	B, D, F	S	P, R	ANG, DAL
RN^70@6422%&	64,200	1/2	C, N, R	H, J, K, C, E	B, D	S	P, R	ANG, DAL
RN^70@6492%&	64,900	1/2	C, N, R	H, J, K, C, E	B, D, F	S	P, R	ANG, DAL
RN^70@6572%&	65,700	1/2	C, N, R	H, J, K, C, E	B, D	S	P, R	ANG, DAL
RN^70@6652%&	66,500	1/2	C, N, R	H, J, K, C, E	B, D, F	S	P, R	ANG, DAL
RN^70@6732%&	67,300	1/2	C, N, R	H, J, K, C, E	B, D	S	P, R	ANG, DAL
RN^70@6812%&	68,100	1/2	C, N, R	H, J, K, C, E	B, D, F	S	P, R	ANG, DAL
RN^70@6902%&	69,000	1/2	C, N, R	H, J, K, C, E	B, D	S	P, R	ANG, DAL
	Resistance	Power	Term.	Char.	Resistance	Level 1	Level 2	
Part Number	Value (Ohms)	Rating (W)	Type (^)	(@)	Tolerance (%)	(FRL) (&)	(FRL) (&)	Manufacturer
RN^70@6982%&	69,800	1/2	C, N, R	H, J, K, C, E	B, D, F	S	P, R	ANG, DAL
RN^70@7062%&	70,600	1/2	C, N, R	H, J, K, C, E	B, D	S	P, R	ANG, DAL
RN^70@7152%&	71,500	1/2	C, N, R	H, J, K, C, E	B, D, F	S	P, R	ANG, DAL
RN^70@7232%&	72,300	1/2	C, N, R	H, J, K, C, E	B, D	S	P, R	ANG, DAL
RN^70@7322%&	73,200	1/2	C, N, R	H, J, K, C, E	B, D, F	S	P, R	ANG, DAL
RN^70@7412%&	74,100	1/2	C, N, R	H, J, K, C, E	B, D	S	P, R	ANG, DAL
RN^70@7502%&	75,000	1/2	C, N, R	H, J, K, C, E	B, D, F	S	P, R	ANG, DAL
RN^70@7592%&	75,900	1/2	C, N, R	H, J, K, C, E	B, D	S	P, R	ANG, DAL
RN^70@7682%&	76,800	1/2	C, N, R	H, J, K, C, E	B, D, F	S	P, R	ANG, DAL
	Resistance	Power	Term.	Char.	Resistance	Level 1	Level 2	
Part Number	Value (Ohms)	Rating (W)	Type (^)	(@)	Tolerance (%)	(FRL) (&)	(FRL) (&)	Manufacturer

	Resistance	Power	Term.	Char.	Resistance	Level 1	Level 2	
Part Number	Value (Ohms)	Rating (W)	Type (^)	(@)	Tolerance (%)	(FRL) (&)	(FRL) (&)	Manufacturer
RN^70@7772%&	77,700	1/2	C, N, R	H, J, K, C, E	B, D	S	P, R	ANG, DAL
RN^70@7872%&	78,700	1/2	C, N, R	H, J, K, C, E	B, D, F	S	P, R	ANG, DAL
RN^70@7962%&	79,600	1/2	C, N, R	H, J, K, C, E	B, D	S	P, R	ANG, DAL
RN^70@8062%&	80,600	1/2	C, N, R	H, J, K, C, E	B, D, F	S	P, R	ANG, DAL
RN^70@8162%&	81,600	1/2	C, N, R	H, J, K, C, E	B, D	S	P, R	ANG, DAL
RN^70@8252%&	82,500	1/2	C, N, R	H, J, K, C, E	B, D, F	S	P, R	ANG, DAL
RN^70@8352%&	83,500	1/2	C, N, R	H, J, K, C, E	B, D	S	P, R	ANG, DAL
RN^70@8452%&	84,500	1/2	C, N, R	H, J, K, C, E	B, D, F	S	P, R	ANG, DAL
RN^70@8562%&	85,600	1/2	C, N, R	H, J, K, C, E	B, D	S	P, R	ANG, DAL
	Resistance	Power	Term.	Char.	Resistance	Level 1	Level 2	
Part Number	Value (Ohms)	Rating (W)	Type (^)	(@)	Tolerance (%)	(FRL) (&)	(FRL) (&)	Manufacturer
RN^70@8662%&	86,600	1/2	C, N, R	H, J, K, C, E	B, D, F	S	P, R	ANG, DAL
RN^70@8762%&	87,600	1/2	C, N, R	H, J, K, C, E	B, D	S	P, R	ANG, DAL
RN^70@8872%&	88,700	1/2	C, N, R	H, J, K, C, E	B, D, F	S	P, R	ANG, DAL
RN^70@8982%&	89,800	1/2	C, N, R	H, J, K, C, E	B, D	S	P, R	ANG, DAL
RN^70@9092%&	90,900	1/2	C, N, R	H, J, K, C, E	B, D, F	S	P, R	ANG, DAL
RN^70@9202%&	92,000	1/2	C, N, R	H, J, K, C, E	B, D	S	P, R	ANG, DAL
RN^70@9312%&	93,100	1/2	C, N, R	H, J, K, C, E	B, D, F	S	P, R	ANG, DAL
RN^70@9422%&	94,200	1/2	C, N, R	H, J, K, C, E	B, D	S	P, R	ANG, DAL
RN^70@9532%&	95,300	1/2	C, N, R	H, J, K, C, E	B, D, F	S	P, R	ANG, DAL
	Resistance	Power	Term.	Char.	Resistance	Level 1	Level 2	
Part Number	Value (Ohms)	Rating (W)	Type (^)	(@)	Tolerance (%)	(FRL) (&)	(FRL) (&)	Manufacturer
RN^70@9652%&	96,500	1/2	C, N, R	H, J, K, C, E	B, D	S	P, R	ANG, DAL
RN^70@9762%&	97,600	1/2	C, N, R	H, J, K, C, E	B, D, F	S	P, R	ANG, DAL
RN^70@9882%&	98,800	1/2	C, N, R	H, J, K, C, E	B, D	S	P, R	ANG, DAL
	Resistance	Power	Term.	Char.	Resistance	Level 1	Level 2	
Part Number	Value (Ohms)	Rating (W)	Type (^)	(@)	Tolerance (%)	(FRL) (&)	(FRL) (&)	Manufacturer
	Resistance	Power	Term.	Char.	Resistance	Level 1	Level 2	
Part Number	Value (Ohms)	Rating (W)	Type (^)	(@)	Tolerance (%)	(FRL) (&)	(FRL) (&)	Manufacturer
	Resistance	Power	Term.	Char.	Resistance	Level 1	Level 2	
Part Number	Value (Ohms)	Rating (W)	Type (^)	(@)	Tolerance (%)	(FRL) (&)	(FRL) (&)	Manufacturer

RN^70 Film Resistors: 100,000 Ohms through 988,000 Ohms

	Resistance	Power	Term.	Char.	Resistance	Level 1	Level 2	
Part Number	Value (Ohms)	Rating (W)	Type (^)	(@)	Tolerance (%)	(FRL) (&)	(FRL) (&)	Manufacturer
RN^70@1003%&	100,000	1/2	C, N, R	H, J, K, C, E	B, D, F	S	P, R	ANG, DAL
RN^70@1013%&	101,000	1/2	C, N, R	H, J, K, C, E	B, D	S	P, R	ANG, DAL
RN^70@1023%&	102,000	1/2	C, N, R	H, J, K, C, E	B, D, F	S	P, R	ANG, DAL
RN^70@1043%&	104,000	1/2	C, N, R	H, J, K, C, E	B, D	S	P, R	ANG, DAL
RN^70@1053%&	105,000	1/2	C, N, R	H, J, K, C, E	B, D, F	S	P, R	ANG, DAL
RN^70@1063%&	106,000	1/2	C, N, R	H, J, K, C, E	B, D	S	P, R	ANG, DAL
RN^70@1073%&	107,000	1/2	C, N, R	H, J, K, C, E	B, D, F	S	P, R	ANG, DAL

RN^70@1093%&	109,000	1/2	C, N, R	H, J, K, C, E	B, D	S	P, R	ANG, DAL
RN^70@1103%&	110,000	1/2	C, N, R	H, J, K, C, E	B, D, F	S	P, R	ANG, DAL
	Resistance	Power	Term.	Char.	Resistance	Level 1	Level 2	
Part Number	Value (Ohms)	Rating (W)	Type (^)	(@)	Tolerance (%)	(FRL) (&)	(FRL) (&)	Manufacturer
RN^70@1113%&	111,000	1/2	C, N, R	H, J, K, C, E	B, D	S	P, R	ANG, DAL
RN^70@1133%&	113,000	1/2	C, N, R	H, J, K, C, E	B, D, F	S	P, R	ANG, DAL
RN^70@1143%&	114,000	1/2	C, N, R	H, J, K, C, E	B, D	S	P, R	ANG, DAL
RN^70@1153%&	115,000	1/2	C, N, R	H, J, K, C, E	B, D, F	S	P, R	ANG, DAL
RN^70@1173%&	117,000	1/2	C, N, R	H, J, K, C, E	B, D	S	P, R	ANG, DAL
RN^70@1183%&	118,000	1/2	C, N, R	H, J, K, C, E	B, D, F	S	P, R	ANG, DAL
RN^70@1203%&	120,000	1/2	C, N, R	H, J, K, C, E	B, D	S	P, R	ANG, DAL
RN^70@1213%&	121,000	1/2	C, N, R	H, J, K, C, E	B, D, F	S	P, R	ANG, DAL
RN^70@1233%&	123,000	1/2	C, N, R	H, J, K, C, E	B, D	S	P, R	ANG, DAL
	Resistance	Power	Term.	Char.	Resistance	Level 1	Level 2	
Part Number	Value (Ohms)	Rating (W)	Type (^)	(@)	Tolerance (%)	(FRL) (&)	(FRL) (&)	Manufacturer
RN^70@1243%&	124,000	1/2	C, N, R	H, J, K, C, E	B, D, F	S	P, R	ANG, DAL
RN^70@1263%&	126,000	1/2	C, N, R	H, J, K, C, E	B, D	S	P, R	ANG, DAL
RN^70@1273%&	127,000	1/2	C, N, R	H, J, K, C, E	B, D, F	S	P, R	ANG, DAL
RN^70@1293%&	129,000	1/2	C, N, R	H, J, K, C, E	B, D	S	P, R	ANG, DAL
RN^70@1303%&	130,000	1/2	C, N, R	H, J, K, C, E	B, D, F	S	P, R	ANG, DAL
RN^70@1323%&	132,000	1/2	C, N, R	H, J, K, C, E	B, D	S	P, R	ANG, DAL
RN^70@1333%&	133,000	1/2	C, N, R	H, J, K, C, E	B, D, F	S	P, R	ANG, DAL
RN^70@1353%&	135,000	1/2	C, N, R	H, J, K, C, E	B, D	S	P, R	ANG, DAL
RN^70@1373%&	137,000	1/2	C, N, R	H, J, K, C, E	B, D, F	S	P, R	ANG, DAL
	Resistance	Power	Term.	Char.	Resistance	Level 1	Level 2	
Part Number	Value (Ohms)	Rating (W)	Type (^)	(@)	Tolerance (%)	(FRL) (&)	(FRL) (&)	Manufacturer
RN^70@1383%&	138,000	1/2	C, N, R	H, J, K, C, E	B, D	S	P, R	ANG, DAL
RN^70@1403%&	140,000	1/2	C, N, R	H, J, K, C, E	B, D, F	S	P, R	ANG, DAL
RN^70@1423%&	142,000	1/2	C, N, R	H, J, K, C, E	B, D	S	P, R	ANG, DAL
RN^70@1433%&	143,000	1/2	C, N, R	H, J, K, C, E	B, D, F	S	P, R	ANG, DAL
RN^70@1453%&	145,000	1/2	C, N, R	H, J, K, C, E	B, D	S	P, R	ANG, DAL
RN^70@1473%&	147,000	1/2	C, N, R	H, J, K, C, E	B, D, F	S	P, R	ANG, DAL
RN^70@1493%&	149,000	1/2	C, N, R	H, J, K, C, E	B, D	S	P, R	ANG, DAL
RN^70@1503%&	150,000	1/2	C, N, R	H, J, K, C, E	B, D, F	S	P, R	ANG, DAL
RN^70@1523%&	152,000	1/2	C, N, R	H, J, K, C, E	B, D	S	P, R	ANG, DAL
	Resistance	Power	Term.	Char.	Resistance	Level 1	Level 2	
Part Number	Value (Ohms)	Rating (W)	Type (^)	(@)	Tolerance (%)	(FRL) (&)	(FRL) (&)	Manufacturer
RN^70@1543%&	154,000	1/2	C, N, R	H, J, K, C, E	B, D, F	S	P, R	ANG, DAL
RN^70@1563%&	156,000	1/2	C, N, R	H, J, K, C, E	B, D	S	P, R	ANG, DAL
RN^70@1583%&	158,000	1/2	C, N, R	H, J, K, C, E	B, D, F	S	P, R	ANG, DAL
RN^70@1603%&	160,000	1/2	C, N, R	H, J, K, C, E	B, D	S	P, R	ANG, DAL
RN^70@1623%&	162,000	1/2	C, N, R	H, J, K, C, E	B, D, F	S	P, R	ANG, DAL
RN^70@1643%&	164,000	1/2	C, N, R	H, J, K, C, E	B, D	S	P, R	ANG, DAL
RN^70@1653%&	165,000	1/2	C, N, R	H, J, K, C, E	B, D, F	S	P, R	ANG, DAL
RN^70@1673%&	167,000	1/2	C, N, R	H, J, K, C, E	B, D	S	P, R	ANG, DAL
RN^70@1693%&	169,000	1/2	C, N, R	H, J, K, C, E	B, D, F	S	P, R	ANG, DAL
	Resistance	Power	Term.	Char.	Resistance	Level 1	Level 2	

Part Number	Value (Ohms)	Rating (W)	Type (^)	(@)	Tolerance (%)	(FRL) (&)	(FRL) (&)	Manufacturer
RN^70@1723%&	172,000	1/2	C, N, R	H, J, K, C, E	B, D	S	P, R	ANG, DAL
RN^70@1743%&	174,000	1/2	C, N, R	H, J, K, C, E	B, D, F	S	P, R	ANG, DAL
RN^70@1763%&	176,000	1/2	C, N, R	H, J, K, C, E	B, D	S	P, R	ANG, DAL
RN^70@1783%&	178,000	1/2	C, N, R	H, J, K, C, E	B, D, F	S	P, R	ANG, DAL
RN^70@1803%&	180,000	1/2	C, N, R	H, J, K, C, E	B, D	S	P, R	ANG, DAL
RN^70@1823%&	182,000	1/2	C, N, R	H, J, K, C, E	B, D, F	S	P, R	ANG, DAL
RN^70@1843%&	184,000	1/2	C, N, R	H, J, K, C, E	B, D	S	P, R	ANG, DAL
RN^70@1873%&	187,000	1/2	C, N, R	H, J, K, C, E	B, D, F	S	P, R	ANG, DAL
RN^70@1893%&	189,000	1/2	C, N, R	H, J, K, C, E	B, D	S	P, R	ANG, DAL
	Resistance	Power	Term.	Char.	Resistance	Level 1	Level 2	
Part Number	Value (Ohms)	Rating (W)	Type (^)	(@)	Tolerance (%)	(FRL) (&)	(FRL) (&)	Manufacturer
RN^70@1913%&	191,000	1/2	C, N, R	H, J, K, C, E	B, D, F	S	P, R	ANG, DAL
RN^70@1933%&	193,000	1/2	C, N, R	H, J, K, C, E	B, D	S	P, R	ANG, DAL
RN^70@1963%&	196,000	1/2	C, N, R	H, J, K, C, E	B, D, F	S	P, R	ANG, DAL
RN^70@1983%&	198,000	1/2	C, N, R	H, J, K, C, E	B, D	S	P, R	ANG, DAL
RN^70@2003%&	200,000	1/2	C, N, R	H, J, K, C, E	B, D, F	S	P, R	ANG, DAL
RN^70@2033%&	203,000	1/2	C, N, R	H, J, K, C, E	B, D	S	P, R	ANG, DAL
RN^70@2053%&	205,000	1/2	C, N, R	H, J, K, C, E	B, D, F	S	P, R	ANG, DAL
RN^70@2083%&	208,000	1/2	C, N, R	H, J, K, C, E	B, D	S	P, R	ANG, DAL
RN^70@2103%&	210,000	1/2	C, N, R	H, J, K, C, E	B, D, F	S	P, R	ANG, DAL
	Resistance	Power	Term.	Char.	Resistance	Level 1	Level 2	
Part Number	Value (Ohms)	Rating (W)	Type (^)	(@)	Tolerance (%)	(FRL) (&)	(FRL) (&)	Manufacturer
	Resistance	Power	Term.	Char.	Resistance	Level 1	Level 2	
Part Number	Value (Ohms)	Rating (W)	Type (^)	(@)	Tolerance (%)	(FRL) (&)	(FRL) (&)	Manufacturer
RN^70@2133%&	213,000	1/2	C, N, R	H, J, K, C, E	B, D	S	P, R	ANG, DAL
RN^70@2153%&	215,000	1/2	C, N, R	H, J, K, C, E	B, D, F	S	P, R	ANG, DAL
RN^70@2183%&	218,000	1/2	C, N, R	H, J, K, C, E	B, D	S	P, R	ANG, DAL
RN^70@2213%&	221,000	1/2	C, N, R	H, J, K, C, E	B, D, F	S	P, R	ANG, DAL
RN^70@2233%&	223,000	1/2	C, N, R	H, J, K, C, E	B, D	S	P, R	ANG, DAL
RN^70@2263%&	226,000	1/2	C, N, R	H, J, K, C, E	B, D, F	S	P, R	ANG, DAL
RN^70@2293%&	229,000	1/2	C, N, R	H, J, K, C, E	B, D	S	P, R	ANG, DAL
RN^70@2323%&	232,000	1/2	C, N, R	H, J, K, C, E	B, D, F	S	P, R	ANG, DAL
RN^70@2343%&	234,000	1/2	C, N, R	H, J, K, C, E	B, D	S	P, R	ANG, DAL
	Resistance	Power	Term.	Char.	Resistance	Level 1	Level 2	
Part Number	Value (Ohms)	Rating (W)	Type (^)	(@)	Tolerance (%)	(FRL) (&)	(FRL) (&)	Manufacturer
RN^70@2373%&	237,000	1/2	C, N, R	H, J, K, C, E	B, D, F	S	P, R	ANG, DAL
RN^70@2403%&	240,000	1/2	C, N, R	H, J, K, C, E	B, D	S	P, R	ANG, DAL
RN^70@2433%&	243,000	1/2	C, N, R	H, J, K, C, E	B, D, F	S	P, R	ANG, DAL
RN^70@2463%&	246,000	1/2	C, N, R	H, J, K, C, E	B, D	S	P, R	ANG, DAL
RN^70@2493%&	249,000	1/2	C, N, R	H, J, K, C, E	B, D, F	S	P, R	ANG, DAL
RN^70@2523%&	252,000	1/2	C, N, R	H, J, K, C, E	B, D	S	P, R	ANG, DAL
RN^70@2553%&	255,000	1/2	C, N, R	H, J, K, C, E	B, D, F	S	P, R	ANG, DAL
RN^70@2583%&	258,000	1/2	C, N, R	H, J, K, C, E	B, D	S	P, R	ANG, DAL
RN^70@2613%&	261,000	1/2	C, N, R	H, J, K, C, E	B, D, F	S	P, R	ANG, DAL
	Resistance	Power	Term.	Char.	Resistance	Level 1	Level 2	
Part Number	Value (Ohms)	Rating (W)	Type (^)	(@)	Tolerance (%)	(FRL) (&)	(FRL) (&)	Manufacturer

RN^70@2643%&	264,000	1/2	C, N, R	H, J, K, C, E	B, D	S	P, R	ANG, DAL
RN^70@2673%&	267,000	1/2	C, N, R	H, J, K, C, E	B, D, F	S	P, R	ANG, DAL
RN^70@2713%&	271,000	1/2	C, N, R	H, J, K, C, E	B, D	S	P, R	ANG, DAL
RN^70@2743%&	274,000	1/2	C, N, R	H, J, K, C, E	B, D, F	S	P, R	ANG, DAL
RN^70@2773%&	277,000	1/2	C, N, R	H, J, K, C, E	B, D	S	P, R	ANG, DAL
RN^70@2803%&	280,000	1/2	C, N, R	H, J, K, C, E	B, D, F	S	P, R	ANG, DAL
RN^70@2843%&	284,000	1/2	C, N, R	H, J, K, C, E	B, D	S	P, R	ANG, DAL
RN^70@2873%&	287,000	1/2	C, N, R	H, J, K, C, E	B, D, F	S	P, R	ANG, DAL
RN^70@2913%&	291,000	1/2	C, N, R	H, J, K, C, E	B, D	S	P, R	ANG, DAL
	Resistance	Power	Term.	Char.	Resistance	Level 1	Level 2	
Part Number	Value (Ohms)	Rating (W)	Type (^)	(@)	Tolerance (%)	(FRL) (&)	(FRL) (&)	Manufacturer
RN^70@2943%&	294,000	1/2	C, N, R	H, J, K, C, E	B, D, F	S	P, R	ANG, DAL
RN^70@2983%&	298,000	1/2	C, N, R	H, J, K, C, E	B, D	S	P, R	ANG, DAL
RN^70@3013%&	301,000	1/2	C, N, R	H, J, K, C, E	B, D, F	S	P, R	ANG, DAL
RN^70@3053%&	305,000	1/2	C, N, R	H, J, K, C, E	B, D	S	P, R	ANG, DAL
RN^70@3093%&	309,000	1/2	C, N, R	H, J, K, C, E	B, D, F	S	P, R	ANG, DAL
RN^70@3123%&	312,000	1/2	C, N, R	H, J, K, C, E	B, D	S	P, R	ANG, DAL
RN^70@3163%&	316,000	1/2	C, N, R	H, J, K, C, E	B, D, F	S	P, R	ANG, DAL
RN^70@3203%&	320,000	1/2	C, N, R	H, J, K, C, E	B, D	S	P, R	ANG, DAL
RN^70@3243%&	324,000	1/2	C, N, R	H, J, K, C, E	B, D, F	S	P, R	ANG, DAL
	Resistance	Power	Term.	Char.	Resistance	Level 1	Level 2	
Part Number	Value (Ohms)	Rating (W)	Type (^)	(@)	Tolerance (%)	(FRL) (&)	(FRL) (&)	Manufacturer
RN^70@3283%&	328,000	1/2	C, N, R	H, J, K, C, E	B, D	S	P, R	ANG, DAL
RN^70@3323%&	332,000	1/2	C, N, R	H, J, K, C, E	B, D, F	S	P, R	ANG, DAL
RN^70@3363%&	336,000	1/2	C, N, R	H, J, K, C, E	B, D	S	P, R	ANG, DAL
RN^70@3403%&	340,000	1/2	C, N, R	H, J, K, C, E	B, D, F	S	P, R	ANG, DAL
RN^70@3443%&	344,000	1/2	C, N, R	H, J, K, C, E	B, D	S	P, R	ANG, DAL
RN^70@3483%&	348,000	1/2	C, N, R	H, J, K, C, E	B, D, F	S	P, R	ANG, DAL
RN^70@3523%&	352,000	1/2	C, N, R	H, J, K, C, E	B, D	S	P, R	ANG, DAL
RN^70@3573%&	357,000	1/2	C, N, R	H, J, K, C, E	B, D, F	S	P, R	ANG, DAL
RN^70@3613%&	361,000	1/2	C, N, R	H, J, K, C, E	B, D	S	P, R	ANG, DAL
	Resistance	Power	Term.	Char.	Resistance	Level 1	Level 2	
Part Number	Value (Ohms)	Rating (W)	Type (^)	(@)	Tolerance (%)	(FRL) (&)	(FRL) (&)	Manufacturer
RN^70@3653%&	365,000	1/2	C, N, R	H, J, K, C, E	B, D, F	S	P, R	ANG, DAL
RN^70@3703%&	370,000	1/2	C, N, R	H, J, K, C, E	B, D	S	P, R	ANG, DAL
RN^70@3743%&	374,000	1/2	C, N, R	H, J, K, C, E	B, D, F	S	P, R	ANG, DAL
RN^70@3793%&	379,000	1/2	C, N, R	H, J, K, C, E	B, D	S	P, R	ANG, DAL
RN^70@3833%&	383,000	1/2	C, N, R	H, J, K, C, E	B, D, F	S	P, R	ANG, DAL
RN^70@3883%&	388,000	1/2	C, N, R	H, J, K, C, E	B, D	S	P, R	ANG, DAL
RN^70@3923%&	392,000	1/2	C, N, R	H, J, K, C, E	B, D, F	S	P, R	ANG, DAL
RN^70@3973%&	397,000	1/2	C, N, R	H, J, K, C, E	B, D	S	P, R	ANG, DAL
RN^70@4023%&	402,000	1/2	C, N, R	H, J, K, C, E	B, D, F	S	P, R	ANG, DAL
	Resistance	Power	Term.	Char.	Resistance	Level 1	Level 2	
Part Number	Value (Ohms)	Rating (W)	Type (^)	(@)	Tolerance (%)	(FRL) (&)	(FRL) (&)	Manufacturer
	Resistance	Power	Term.	Char.	Resistance	Level 1	Level 2	
Part Number	Value (Ohms)	Rating (W)	Type (^)	(@)	Tolerance (%)	(FRL) (&)	(FRL) (&)	Manufacturer
RN^70@4073%&	407,000	1/2	C, N, R	H, J, K, C, E	B, D	S	P, R	ANG, DAL

RN^70@4123%&	412,000	1/2	C, N, R	H, J, K, C, E	B, D, F	S	P, R	ANG, DAL
RN^70@4173%&	417,000	1/2	C, N, R	H, J, K, C, E	B, D	S	P, R	ANG, DAL
RN^70@4223%&	422,000	1/2	C, N, R	H, J, K, C, E	B, D, F	S	P, R	ANG, DAL
RN^70@4273%&	427,000	1/2	C, N, R	H, J, K, C, E	B, D	S	P, R	ANG, DAL
RN^70@4323%&	432,000	1/2	C, N, R	H, J, K, C, E	B, D, F	S	P, R	ANG, DAL
RN^70@4373%&	437,000	1/2	C, N, R	H, J, K, C, E	B, D	S	P, R	ANG, DAL
RN^70@4423%&	442,000	1/2	C, N, R	H, J, K, C, E	B, D, F	S	P, R	ANG, DAL
RN^70@4483%&	448,000	1/2	C, N, R	H, J, K, C, E	B, D	S	P, R	ANG, DAL
	Resistance	Power	Term.	Char.	Resistance	Level 1	Level 2	
Part Number	Value (Ohms)	Rating (W)	Type (^)	(@)	Tolerance (%)	(FRL) (&)	(FRL) (&)	Manufacturer
RN^70@4533%&	453,000	1/2	C, N, R	H, J, K, C, E	B, D, F	S	P, R	ANG, DAL
RN^70@4593%&	459,000	1/2	C, N, R	H, J, K, C, E	B, D	S	P, R	ANG, DAL
RN^70@4643%&	464,000	1/2	C, N, R	H, J, K, C, E	B, D, F	S	P, R	ANG, DAL
RN^70@4703%&	470,000	1/2	C, N, R	H, J, K, C, E	B, D	S	P, R	ANG, DAL
RN^70@4753%&	475,000	1/2	C, N, R	H, J, K, C, E	B, D, F	S	P, R	ANG, DAL
RN^70@4813%&	481,000	1/2	C, N, R	H, J, K, C, E	B, D	S	P, R	ANG, DAL
RN^70@4873%&	487,000	1/2	C, N, R	H, J, K, C, E	B, D, F	S	P, R	ANG, DAL
RN^70@4933%&	493,000	1/2	C, N, R	H, J, K, C, E	B, D	S	P, R	ANG, DAL
RN^70@4993%&	499,000	1/2	C, N, R	H, J, K, C, E	B, D, F	S	P, R	ANG, DAL
	Resistance	Power	Term.	Char.	Resistance	Level 1	Level 2	
Part Number	Value (Ohms)	Rating (W)	Type (^)	(@)	Tolerance (%)	(FRL) (&)	(FRL) (&)	Manufacturer
RN^70@5053%&	505,000	1/2	C, N, R	H, J, K, C, E	B, D	S	P, R	ANG, DAL
RN^70@5113%&	511,000	1/2	C, N, R	H, J, K, C, E	B, D, F	S	P, R	ANG, DAL
RN^70@5173%&	517,000	1/2	C, N, R	H, J, K, C, E	B, D	S	P, R	ANG, DAL
RN^70@5233%&	523,000	1/2	C, N, R	H, J, K, C, E	B, D, F	S	P, R	ANG, DAL
RN^70@5303%&	530,000	1/2	C, N, R	H, J, K, C, E	B, D	S	P, R	ANG, DAL
RN^70@5363%&	536,000	1/2	C, N, R	H, J, K, C, E	B, D, F	S	P, R	ANG, DAL
RN^70@5423%&	542,000	1/2	C, N, R	H, J, K, C, E	B, D	S	P, R	ANG, DAL
RN^70@5493%&	549,000	1/2	C, N, R	H, J, K, C, E	B, D, F	S	P, R	ANG, DAL
RN^70@5563%&	556,000	1/2	C, N, R	H, J, K, C, E	B, D	S	P, R	ANG, DAL
	Resistance	Power	Term.	Char.	Resistance	Level 1	Level 2	
Part Number	Value (Ohms)	Rating (W)	Type (^)	(@)	Tolerance (%)	(FRL) (&)	(FRL) (&)	Manufacturer
RN^70@5623%&	562,000	1/2	C, N, R	H, J, K, C, E	B, D, F	S	P, R	ANG, DAL
RN^70@5693%&	569,000	1/2	C, N, R	H, J, K, C, E	B, D	S	P, R	ANG, DAL
RN^70@5763%&	576,000	1/2	C, N, R	H, J, K, C, E	B, D, F	S	P, R	ANG, DAL
RN^70@5833%&	583,000	1/2	C, N, R	H, J, K, C, E	B, D	S	P, R	ANG, DAL
RN^70@5903%&	590,000	1/2	C, N, R	H, J, K, C, E	B, D, F	S	P, R	ANG, DAL
RN^70@5973%&	597,000	1/2	C, N, R	H, J, K, C, E	B, D	S	P, R	ANG, DAL
RN^70@6043%&	604,000	1/2	C, N, R	H, J, K, C, E	B, D, F	S	P, R	ANG, DAL
RN^70@6123%&	612,000	1/2	C, N, R	H, J, K, C, E	B, D	S	P, R	ANG, DAL
RN^70@6193%&	619,000	1/2	C, N, R	H, J, K, C, E	B, D, F	S	P, R	ANG, DAL
	Resistance	Power	Term.	Char.	Resistance	Level 1	Level 2	
Part Number	Value (Ohms)	Rating (W)	Type (^)	(@)	Tolerance (%)	(FRL) (&)	(FRL) (&)	Manufacturer
RN^70@6263%&	626,000	1/2	C, N, R	H, J, K, C, E	B, D	S	P, R	ANG, DAL
RN^70@6343%&	634,000	1/2	C, N, R	H, J, K, C, E	B, D, F	S	P, R	ANG, DAL
RN^70@6423%&	642,000	1/2	C, N, R	H, J, K, C, E	B, D	S	P, R	ANG, DAL
RN^70@6493%&	649,000	1/2	C, N, R	H, J, K, C, E	B, D, F	S	P, R	ANG, DAL

RN^70@6573%&	657,000	1/2	C, N, R	H, J, K, C, E	B, D	S	P, R	ANG, DAL
RN^70@6653%&	665,000	1/2	C, N, R	H, J, K, C, E	B, D, F	S	P, R	ANG, DAL
RN^70@6733%&	673,000	1/2	C, N, R	H, J, K, C, E	B, D	S	P, R	ANG, DAL
RN^70@6813%&	681,000	1/2	C, N, R	H, J, K, C, E	B, D, F	S	P, R	ANG, DAL
RN^70@6903%&	690,000	1/2	C, N, R	H, J, K, C, E	B, D	S	P, R	ANG, DAL
	Resistance	Power	Term.	Char.	Resistance	Level 1	Level 2	
Part Number	Value (Ohms)	Rating (W)	Type (^)	(@)	Tolerance (%)	(FRL) (&)	(FRL) (&)	Manufacturer
RN^70@6983%&	698,000	1/2	C, N, R	H, J, K, C, E	B, D, F	S	P, R	ANG, DAL
RN^70@7063%&	706,000	1/2	C, N, R	H, J, K, C, E	B, D	S	P, R	ANG, DAL
RN^70@7153%&	715,000	1/2	C, N, R	H, J, K, C, E	B, D, F	S	P, R	ANG, DAL
RN^70@7233%&	723,000	1/2	C, N, R	H, J, K, C, E	B, D	S	P, R	ANG, DAL
RN^70@7323%&	732,000	1/2	C, N, R	H, J, K, C, E	B, D, F	S	P, R	ANG, DAL
RN^70@7413%&	741,000	1/2	C, N, R	H, J, K, C, E	B, D	S	P, R	ANG, DAL
RN^70@7503%&	750,000	1/2	C, N, R	H, J, K, C, E	B, D, F	S	P, R	ANG, DAL
RN^70@7593%&	759,000	1/2	C, N, R	H, J, K, C, E	B, D	S	P, R	ANG, DAL
RN^70@7683%&	768,000	1/2	C, N, R	H, J, K, C, E	B, D, F	S	P, R	ANG, DAL
	Resistance	Power	Term.	Char.	Resistance	Level 1	Level 2	
Part Number	Value (Ohms)	Rating (W)	Type (^)	(@)	Tolerance (%)	(FRL) (&)	(FRL) (&)	Manufacturer
	Resistance	Power	Term.	Char.	Resistance	Level 1	Level 2	
Part Number	Value (Ohms)	Rating (W)	Type (^)	(@)	Tolerance (%)	(FRL) (&)	(FRL) (&)	Manufacturer
RN^70@7773%&	777,000	1/2	C, N, R	H, J, K, C, E	B, D	S	P, R	ANG, DAL
RN^70@7873%&	787,000	1/2	C, N, R	H, J, K, C, E	B, D, F	S	P, R	ANG, DAL
RN^70@7963%&	796,000	1/2	C, N, R	H, J, K, C, E	B, D	S	P, R	ANG, DAL
RN^70@8063%&	806,000	1/2	C, N, R	H, J, K, C, E	B, D, F	S	P, R	ANG, DAL
RN^70@8163%&	816,000	1/2	C, N, R	H, J, K, C, E	B, D	S	P, R	ANG, DAL
RN^70@8253%&	825,000	1/2	C, N, R	H, J, K, C, E	B, D, F	S	P, R	ANG, DAL
RN^70@8353%&	835,000	1/2	C, N, R	H, J, K, C, E	B, D	S	P, R	ANG, DAL
RN^70@8453%&	845,000	1/2	C, N, R	H, J, K, C, E	B, D, F	S	P, R	ANG, DAL
RN^70@8563%&	856,000	1/2	C, N, R	H, J, K, C, E	B, D	S	P, R	ANG, DAL
	Resistance	Power	Term.	Char.	Resistance	Level 1	Level 2	
Part Number	Value (Ohms)	Rating (W)	Type (^)	(@)	Tolerance (%)	(FRL) (&)	(FRL) (&)	Manufacturer
RN^70@8663%&	866,000	1/2	C, N, R	H, J, K, C, E	B, D, F	S	P, R	ANG, DAL
RN^70@8763%&	876,000	1/2	C, N, R	H, J, K, C, E	B, D	S	P, R	ANG, DAL
RN^70@8873%&	887,000	1/2	C, N, R	H, J, K, C, E	B, D, F	S	P, R	ANG, DAL
RN^70@8983%&	898,000	1/2	C, N, R	H, J, K, C, E	B, D	S	P, R	ANG, DAL
RN^70@9093%&	909,000	1/2	C, N, R	H, J, K, C, E	B, D, F	S	P, R	ANG, DAL
RN^70@9203%&	920,000	1/2	C, N, R	H, J, K, C, E	B, D	S	P, R	ANG, DAL
RN^70@9313%&	931,000	1/2	C, N, R	H, J, K, C, E	B, D, F	S	P, R	ANG, DAL
RN^70@9423%&	942,000	1/2	C, N, R	H, J, K, C, E	B, D	S	P, R	ANG, DAL
RN^70@9533%&	953,000	1/2	C, N, R	H, J, K, C, E	B, D, F	S	P, R	ANG, DAL
	Resistance	Power	Term.	Char.	Resistance	Level 1	Level 2	
Part Number	Value (Ohms)	Rating (W)	Type (^)	(@)	Tolerance (%)	(FRL) (&)	(FRL) (&)	Manufacturer
RN^70@9653%&	965,000	1/2	C, N, R	H, J, K, C, E	B, D	S	P, R	ANG, DAL
RN^70@9763%&	976,000	1/2	C, N, R	H, J, K, C, E	B, D, F	S	P, R	ANG, DAL
RN^70@9883%&	988,000	1/2	C, N, R	H, J, K, C, E	B, D	S	P, R	ANG, DAL
	Resistance	Power	Term.	Char.	Resistance	Level 1	Level 2	
Part Number	Value (Ohms)	Rating (W)	Type (^)	(@)	Tolerance (%)	(FRL) (&)	(FRL) (&)	Manufacturer

	Resistance	Power	Term.	Char.	Resistance	Level 1	Level 2	
Part Number	Value (Ohms)	Rating (W)	Type (^)	(@)	Tolerance (%)	(FRL) (&)	(FRL) (&)	Manufacturer
	Resistance	Power	Term.	Char.	Resistance	Level 1	Level 2	
Part Number	Value (Ohms)	Rating (W)	Type (^)	(@)	Tolerance (%)	(FRL) (&)	(FRL) (&)	Manufacturer

RN^70 Film Resistors: 1,000,000 Ohms through 4,990,000 Ohms

	Resistance	Power	Term.	Char.	Resistance	Level 1	Level 2	
Part Number	Value (Ohms)	Rating (W)	Type (^)	(@)	Tolerance (%)	(FRL) (&)	(FRL) (&)	Manufacturer
RN^70@1004%&	1,000,000	1/2	C, N, R	H, J, K, C, E	B, D, F	S	P, R	ANG, DAL
RN^70@1014%&	1,010,000	1/2	C, N, R	H, J, K, C, E	B, D	S	P, R	ANG, DAL
RN^70@1024%&	1,020,000	1/2	C, N, R	H, J, K, C, E	B, D, F	S	P, R	ANG, DAL
RN^70@1044%&	1,040,000	1/2	C, N, R	H, J, K, C, E	B, D	S	P, R	ANG, DAL
RN^70@1054%&	1,050,000	1/2	C, N, R	H, J, K, C, E	B, D, F	S	P, R	ANG, DAL
RN^70@1064%&	1,060,000	1/2	C, N, R	H, J, K, C, E	B, D	S	P, R	ANG, DAL
RN^70@1074%&	1,070,000	1/2	C, N, R	H, J, K, C, E	B, D, F	S	P, R	ANG, DAL
RN^70@1094%&	1,090,000	1/2	C, N, R	H, J, K, C, E	B, D	S	P, R	ANG, DAL
RN^70@1104%&	1,100,000	1/2	C, N, R	H, J, K, C, E	B, D, F	S	P, R	ANG, DAL
	Resistance	Power	Term.	Char.	Resistance	Level 1	Level 2	
Part Number	Value (Ohms)	Rating (W)	Type (^)	(@)	Tolerance (%)	(FRL) (&)	(FRL) (&)	Manufacturer
RN^70@1114%&	1,110,000	1/2	C, N, R	H, J, K, C, E	B, D	S	P, R	ANG, DAL
RN^70@1134%&	1,130,000	1/2	C, N, R	H, J, K, C, E	B, D, F	S	P, R	ANG, DAL
RN^70@1144%&	1,140,000	1/2	C, N, R	H, J, K, C, E	B, D	S	P, R	ANG, DAL
RN^70@1154%&	1,150,000	1/2	C, N, R	H, J, K, C, E	B, D, F	S	P, R	ANG, DAL
RN^70@1174%&	1,170,000	1/2	C, N, R	H, J, K, C, E	B, D	S	P, R	ANG, DAL
RN^70@1184%&	1,180,000	1/2	C, N, R	H, J, K, C, E	B, D, F	S	P, R	ANG, DAL
RN^70@1204%&	1,200,000	1/2	C, N, R	H, J, K, C, E	B, D	S	P, R	ANG, DAL
RN^70@1214%&	1,210,000	1/2	C, N, R	H, J, K, C, E	B, D, F	S	P, R	ANG, DAL
RN^70@1234%&	1,230,000	1/2	C, N, R	H, J, K, C, E	B, D	S	P, R	ANG, DAL
	Resistance	Power	Term.	Char.	Resistance	Level 1	Level 2	
Part Number	Value (Ohms)	Rating (W)	Type (^)	(@)	Tolerance (%)	(FRL) (&)	(FRL) (&)	Manufacturer
RN^70@1244%&	1,240,000	1/2	C, N, R	H, J, K, C, E	B, D, F	S	P, R	ANG, DAL
RN^70@1264%&	1,260,000	1/2	C, N, R	H, J, K, C, E	B, D	S	P, R	ANG, DAL
RN^70@1274%&	1,270,000	1/2	C, N, R	H, J, K, C, E	B, D, F	S	P, R	ANG, DAL
RN^70@1294%&	1,290,000	1/2	C, N, R	H, J, K, C, E	B, D	S	P, R	ANG, DAL
RN^70@1304%&	1,300,000	1/2	C, N, R	H, J, K, C, E	B, D, F	S	P, R	ANG, DAL
RN^70@1324%&	1,320,000	1/2	C, N, R	H, J, K, C, E	B, D	S	P, R	ANG, DAL
RN^70@1334%&	1,330,000	1/2	C, N, R	H, J, K, C, E	B, D, F	S	P, R	ANG, DAL
RN^70@1354%&	1,350,000	1/2	C, N, R	H, J, K, C, E	B, D	S	P, R	ANG, DAL
RN^70@1374%&	1,370,000	1/2	C, N, R	H, J, K, C, E	B, D, F	S	P, R	ANG, DAL
	Resistance	Power	Term.	Char.	Resistance	Level 1	Level 2	
Part Number	Value (Ohms)	Rating (W)	Type (^)	(@)	Tolerance (%)	(FRL) (&)	(FRL) (&)	Manufacturer
RN^70@1384%&	1,380,000	1/2	C, N, R	H, J, K, C, E	B, D	S	P, R	ANG, DAL
RN^70@1404%&	1,400,000	1/2	C, N, R	H, J, K, C, E	B, D, F	S	P, R	ANG, DAL
RN^70@1424%&	1,420,000	1/2	C, N, R	H, J, K, C, E	B, D	S	P, R	ANG, DAL

RN^70@1434%&	1,430,000	1/2	C, N, R	H, J, K, C, E	B, D, F	S	P, R	ANG, DAL
RN^70@1454%&	1,450,000	1/2	C, N, R	H, J, K, C, E	B, D	S	P, R	ANG, DAL
RN^70@1474%&	1,470,000	1/2	C, N, R	H, J, K, C, E	B, D, F	S	P, R	ANG, DAL
RN^70@1494%&	1,490,000	1/2	C, N, R	H, J, K, C, E	B, D	S	P, R	ANG, DAL
RN^70@1504%&	1,500,000	1/2	C, N, R	H, J, K, C, E	B, D, F	S	P, R	ANG, DAL
RN^70@1524%&	1,520,000	1/2	C, N, R	H, J, K, C, E	B, D	S	P, R	ANG, DAL
	Resistance	Power	Term.	Char.	Resistance	Level 1	Level 2	
Part Number	Value (Ohms)	Rating (W)	Type (^)	(@)	Tolerance (%)	(FRL) (&)	(FRL) (&)	Manufacturer
RN^70@1544%&	1,540,000	1/2	C, N, R	H, J, K, C, E	B, D, F	S	P, R	ANG, DAL
RN^70@1564%&	1,560,000	1/2	C, N, R	H, J, K, C, E	B, D	S	P, R	ANG, DAL
RN^70@1584%&	1,580,000	1/2	C, N, R	H, J, K, C, E	B, D, F	S	P, R	ANG, DAL
RN^70@1604%&	1,600,000	1/2	C, N, R	H, J, K, C, E	B, D	S	P, R	ANG, DAL
RN^70@1624%&	1,620,000	1/2	C, N, R	H, J, K, C, E	B, D, F	S	P, R	ANG, DAL
RN^70@1644%&	1,640,000	1/2	C, N, R	H, J, K, C, E	B, D	S	P, R	ANG, DAL
RN^70@1654%&	1,650,000	1/2	C, N, R	H, J, K, C, E	B, D, F	S	P, R	ANG, DAL
RN^70@1674%&	1,670,000	1/2	C, N, R	H, J, K, C, E	B, D	S	P, R	ANG, DAL
RN^70@1694%&	1,690,000	1/2	C, N, R	H, J, K, C, E	B, D, F	S	P, R	ANG, DAL
	Resistance	Power	Term.	Char.	Resistance	Level 1	Level 2	
Part Number	Value (Ohms)	Rating (W)	Type (^)	(@)	Tolerance (%)	(FRL) (&)	(FRL) (&)	Manufacturer
RN^70@1724%&	1,720,000	1/2	C, N, R	H, J, K, C, E	B, D	S	P, R	ANG, DAL
RN^70@1744%&	1,740,000	1/2	C, N, R	H, J, K, C, E	B, D, F	S	P, R	ANG, DAL
RN^70@1764%&	1,760,000	1/2	C, N, R	H, J, K, C, E	B, D	S	P, R	ANG, DAL
RN^70@1784%&	1,780,000	1/2	C, N, R	H, J, K, C, E	B, D, F	S	P, R	ANG, DAL
RN^70@1804%&	1,800,000	1/2	C, N, R	H, J, K, C, E	B, D	S	P, R	ANG, DAL
RN^70@1824%&	1,820,000	1/2	C, N, R	H, J, K, C, E	B, D, F	S	P, R	ANG, DAL
RN^70@1844%&	1,840,000	1/2	C, N, R	H, J, K, C, E	B, D	S	P, R	ANG, DAL
RN^70@1874%&	1,870,000	1/2	C, N, R	H, J, K, C, E	B, D, F	S	P, R	ANG, DAL
RN^70@1894%&	1,890,000	1/2	C, N, R	H, J, K, C, E	B, D	S	P, R	ANG, DAL
	Resistance	Power	Term.	Char.	Resistance	Level 1	Level 2	
Part Number	Value (Ohms)	Rating (W)	Type (^)	(@)	Tolerance (%)	(FRL) (&)	(FRL) (&)	Manufacturer
RN^70@1914%&	1,910,000	1/2	C, N, R	H, J, K, C, E	B, D, F	S	P, R	ANG, DAL
RN^70@1934%&	1,930,000	1/2	C, N, R	H, J, K, C, E	B, D	S	P, R	ANG, DAL
RN^70@1964%&	1,960,000	1/2	C, N, R	H, J, K, C, E	B, D, F	S	P, R	ANG, DAL
RN^70@1984%&	1,980,000	1/2	C, N, R	H, J, K, C, E	B, D	S	P, R	ANG, DAL
RN^70@2004%&	2,000,000	1/2	C, N, R	H, J, K, C, E	B, D, F	S	P, R	ANG, DAL
RN^70@2034%&	2,030,000	1/2	C, N, R	H, J, K, C, E	B, D	S	P, R	ANG, DAL
RN^70@2054%&	2,050,000	1/2	C, N, R	H, J, K, C, E	B, D, F	S	P, R	ANG, DAL
RN^70@2084%&	2,080,000	1/2	C, N, R	H, J, K, C, E	B, D	S	P, R	ANG, DAL
RN^70@2104%&	2,100,000	1/2	C, N, R	H, J, K, C, E	B, D, F	S	P, R	ANG, DAL
	Resistance	Power	Term.	Char.	Resistance	Level 1	Level 2	
Part Number	Value (Ohms)	Rating (W)	Type (^)	(@)	Tolerance (%)	(FRL) (&)	(FRL) (&)	Manufacturer
	Resistance	Power	Term.	Char.	Resistance	Level 1	Level 2	
Part Number	Value (Ohms)	Rating (W)	Type (^)	(@)	Tolerance (%)	(FRL) (&)	(FRL) (&)	Manufacturer
RN^70@2134%&	2,130,000	1/2	C, N, R	H, J, K, C, E	B, D	S	P, R	ANG, DAL
RN^70@2154%&	2,150,000	1/2	C, N, R	H, J, K, C, E	B, D, F	S	P, R	ANG, DAL
RN^70@2184%&	2,180,000	1/2	C, N, R	H, J, K, C, E	B, D	S	P, R	ANG, DAL
RN^70@2214%&	2,210,000	1/2	C, N, R	H, J, K, C, E	B, D, F	S	P, R	ANG, DAL

RN^70@2234%&	2,230,000	1/2	C, N, R	H, J, K, C, E	B, D	S	P, R	ANG, DAL
RN^70@2264%&	2,260,000	1/2	C, N, R	H, J, K, C, E	B, D, F	S	P, R	ANG, DAL
RN^70@2294%&	2,290,000	1/2	C, N, R	H, J, K, C, E	B, D	S	P, R	ANG, DAL
RN^70@2324%&	2,320,000	1/2	C, N, R	H, J, K, C, E	B, D, F	S	P, R	ANG, DAL
RN^70@2344%&	2,340,000	1/2	C, N, R	H, J, K, C, E	B, D	S	P, R	ANG, DAL
	Resistance	Power	Term.	Char.	Resistance	Level 1	Level 2	
Part Number	Value (Ohms)	Rating (W)	Type (^)	(@)	Tolerance (%)	(FRL) (&)	(FRL) (&)	Manufacturer
RN^70@2374%&	2,370,000	1/2	C, N, R	H, J, K, C, E	B, D, F	S	P, R	ANG, DAL
RN^70@2404%&	2,400,000	1/2	C, N, R	H, J, K, C, E	B, D	S	P, R	ANG, DAL
RN^70@2434%&	2,430,000	1/2	C, N, R	H, J, K, C, E	B, D, F	S	P, R	ANG, DAL
RN^70@2464%&	2,460,000	1/2	C, N, R	H, J, K, C, E	B, D	S	P, R	ANG, DAL
RN^70@2494%&	2,490,000	1/2	C, N, R	H, J, K, C, E	B, D, F	S	P, R	ANG, DAL
RN^70@2524%&	2,520,000	1/2	C, N, R	H, J, K, C, E	B, D	S	P, R	ANG, DAL
RN^70@2554%&	2,550,000	1/2	C, N, R	H, J, K, C, E	B, D, F	S	P, R	ANG, DAL
RN^70@2584%&	2,580,000	1/2	C, N, R	H, J, K, C, E	B, D	S	P, R	ANG, DAL
RN^70@2614%&	2,610,000	1/2	C, N, R	H, J, K, C, E	B, D, F	S	P, R	ANG, DAL
	Resistance	Power	Term.	Char.	Resistance	Level 1	Level 2	
Part Number	Value (Ohms)	Rating (W)	Type (^)	(@)	Tolerance (%)	(FRL) (&)	(FRL) (&)	Manufacturer
RN^70@2644%&	2,640,000	1/2	C, N, R	H, J, K, C, E	B, D	S	P, R	ANG, DAL
RN^70@2674%&	2,670,000	1/2	C, N, R	H, J, K, C, E	B, D, F	S	P, R	ANG, DAL
RN^70@2714%&	2,710,000	1/2	C, N, R	H, J, K, C, E	B, D	S	P, R	ANG, DAL
RN^70@2744%&	2,740,000	1/2	C, N, R	H, J, K, C, E	B, D, F	S	P, R	ANG, DAL
RN^70@2774%&	2,770,000	1/2	C, N, R	H, J, K, C, E	B, D	S	P, R	ANG, DAL
RN^70@2804%&	2,800,000	1/2	C, N, R	H, J, K, C, E	B, D, F	S	P, R	ANG, DAL
RN^70@2844%&	2,840,000	1/2	C, N, R	H, J, K, C, E	B, D	S	P, R	ANG, DAL
RN^70@2874%&	2,870,000	1/2	C, N, R	H, J, K, C, E	B, D, F	S	P, R	ANG, DAL
RN^70@2914%&	2,910,000	1/2	C, N, R	H, J, K, C, E	B, D	S	P, R	ANG, DAL
	Resistance	Power	Term.	Char.	Resistance	Level 1	Level 2	
Part Number	Value (Ohms)	Rating (W)	Type (^)	(@)	Tolerance (%)	(FRL) (&)	(FRL) (&)	Manufacturer
RN^70@2944%&	2,940,000	1/2	C, N, R	H, J, K, C, E	B, D, F	S	P, R	ANG, DAL
RN^70@2984%&	2,980,000	1/2	C, N, R	H, J, K, C, E	B, D	S	P, R	ANG, DAL
RN^70@3014%&	3,010,000	1/2	C, N, R	H, J, K, C, E	B, D, F	S	P, R	ANG, DAL
RN^70@3054%&	3,050,000	1/2	N, R	C, E	B, D	S	P, R	ANG
RN^70@3094%&	3,090,000	1/2	N, R	C, E	B, D, F	S	P, R	ANG
RN^70@3124%&	3,120,000	1/2	N, R	C, E	B, D	S	P, R	ANG
RN^70@3164%&	3,160,000	1/2	N, R	C, E	B, D, F	S	P, R	ANG
RN^70@3204%&	3,200,000	1/2	N, R	C, E	B, D	S	P, R	ANG
RN^70@3244%&	3,240,000	1/2	N, R	C, E	B, D, F	S	P, R	ANG
	Resistance	Power	Term.	Char.	Resistance	Level 1	Level 2	
Part Number	Value (Ohms)	Rating (W)	Type (^)	(@)	Tolerance (%)	(FRL) (&)	(FRL) (&)	Manufacturer
RN^70@3284%&	3,280,000	1/2	N, R	C, E	B, D	S	P, R	ANG
RN^70@3324%&	3,320,000	1/2	N, R	C, E	B, D, F	S	P, R	ANG
RN^70@3364%&	3,360,000	1/2	N, R	C, E	B, D	S	P, R	ANG
RN^70@3404%&	3,400,000	1/2	N, R	C, E	B, D, F	S	P, R	ANG
RN^70@3444%&	3,440,000	1/2	N, R	C, E	B, D	S	P, R	ANG
RN^70@3484%&	3,480,000	1/2	N, R	C, E	B, D, F	S	P, R	ANG
RN^70@3524%&	3,520,000	1/2	N, R	C, E	B, D	S	P, R	ANG

RN^70@3574%&	3,570,000	1/2	N, R	C, E	B, D, F	S	P, R	ANG
RN^70@3614%&	3,610,000	1/2	N, R	C, E	B, D	S	P, R	ANG
	Resistance	Power	Term.	Char.	Resistance	Level 1	Level 2	
Part Number	Value (Ohms)	Rating (W)	Type (^)	(@)	Tolerance (%)	(FRL) (&)	(FRL) (&)	Manufacturer
RN^70@3654%&	3,650,000	1/2	N, R	C, E	B, D, F	S	P, R	ANG
RN^70@3704%&	3,700,000	1/2	N, R	C, E	B, D	S	P, R	ANG
RN^70@3744%&	3,740,000	1/2	N, R	C, E	B, D, F	S	P, R	ANG
RN^70@3794%&	3,790,000	1/2	N, R	C, E	B, D	S	P, R	ANG
RN^70@3834%&	3,830,000	1/2	N, R	C, E	B, D, F	S	P, R	ANG
RN^70@3884%&	3,880,000	1/2	N, R	C, E	B, D	S	P, R	ANG
RN^70@3924%&	3,920,000	1/2	N, R	C, E	B, D, F	S	P, R	ANG
RN^70@3974%&	3,970,000	1/2	N, R	C, E	B, D	S	P, R	ANG
RN^70@4024%&	4,020,000	1/2	N, R	C, E	B, D, F	S	P, R	ANG
	Resistance	Power	Term.	Char.	Resistance	Level 1	Level 2	
Part Number	Value (Ohms)	Rating (W)	Type (^)	(@)	Tolerance (%)	(FRL) (&)	(FRL) (&)	Manufacturer
	Resistance	Power	Term.	Char.	Resistance	Level 1	Level 2	
Part Number	Value (Ohms)	Rating (W)	Type (^)	(@)	Tolerance (%)	(FRL) (&)	(FRL) (&)	Manufacturer
RN^70@4074%&	4,070,000	1/2	N, R	C, E	B, D	S	P, R	ANG
RN^70@4124%&	4,120,000	1/2	N, R	C, E	B, D, F	S	P, R	ANG
RN^70@4174%&	4,170,000	1/2	N, R	C, E	B, D	S	P, R	ANG
RN^70@4224%&	4,220,000	1/2	N, R	C, E	B, D, F	S	P, R	ANG
RN^70@4274%&	4,270,000	1/2	N, R	C, E	B, D	S	P, R	ANG
RN^70@4324%&	4,320,000	1/2	N, R	C, E	B, D, F	S	P, R	ANG
RN^70@4374%&	4,370,000	1/2	N, R	C, E	B, D	S	P, R	ANG
RN^70@4424%&	4,420,000	1/2	N, R	C, E	B, D, F	S	P, R	ANG
RN^70@4484%&	4,480,000	1/2	N, R	C, E	B, D	S	P, R	ANG
	Resistance	Power	Term.	Char.	Resistance	Level 1	Level 2	
Part Number	Value (Ohms)	Rating (W)	Type (^)	(@)	Tolerance (%)	(FRL) (&)	(FRL) (&)	Manufacturer
RN^70@4534%&	4,530,000	1/2	N, R	C, E	B, D, F	S	P, R	ANG
RN^70@4594%&	4,590,000	1/2	N, R	C, E	B, D	S	P, R	ANG
RN^70@4644%&	4,640,000	1/2	N, R	C, E	B, D, F	S	P, R	ANG
RN^70@4704%&	4,700,000	1/2	N, R	C, E	B, D	S	P, R	ANG
RN^70@4754%&	4,750,000	1/2	N, R	C, E	B, D, F	S	P, R	ANG
RN^70@4814%&	4,810,000	1/2	N, R	C, E	B, D	S	P, R	ANG
RN^70@4874%&	4,870,000	1/2	N, R	C, E	B, D, F	S	P, R	ANG
RN^70@4934%&	4,930,000	1/2	N, R	C, E	B, D	S	P, R	ANG
RN^70@4994%&	4,990,000	1/2	N, R	C, E	B, D, F	S	P, R	ANG
	Resistance	Power	Term.	Char.	Resistance	Level 1	Level 2	
Part Number	Value (Ohms)	Rating (W)	Type (^)	(@)	Tolerance (%)	(FRL) (&)	(FRL) (&)	Manufacturer
	Resistance	Power	Term.	Char.	Resistance	Level 1	Level 2	
Part Number	Value (Ohms)	Rating (W)	Type (^)	(@)	Tolerance (%)	(FRL) (&)	(FRL) (&)	Manufacturer
	Resistance	Power	Term.	Char.	Resistance	Level 1	Level 2	
Part Number	Value (Ohms)	Rating (W)	Type (^)	(@)	Tolerance (%)	(FRL) (&)	(FRL) (&)	Manufacturer
	Resistance	Power	Term.	Char.	Resistance	Level 1	Level 2	
Part Number	Value (Ohms)	Rating (W)	Type (^)	(@)	Tolerance (%)	(FRL) (&)	(FRL) (&)	Manufacturer
	Resistance	Power	Term.	Char.	Resistance	Level 1	Level 2	
Part Number	Value (Ohms)	Rating (W)	Type (^)	(@)	Tolerance (%)	(FRL) (&)	(FRL) (&)	Manufacturer

	Resistance	Power	Term.	Char.	Resistance	Level 1	Level 2	
Part Number	Value (Ohms)	Rating (W)	Type (^)	(@)	Tolerance (%)	(FRL) (&)	(FRL) (&)	Manufacturer
	Resistance	Power	Term.	Char.	Resistance	Level 1	Level 2	
Part Number	Value (Ohms)	Rating (W)	Type (^)	(@)	Tolerance (%)	(FRL) (&)	(FRL) (&)	Manufacturer
	Resistance	Power	Term.	Char.	Resistance	Level 1	Level 2	
Part Number	Value (Ohms)	Rating (W)	Type (^)	(@)	Tolerance (%)	(FRL) (&)	(FRL) (&)	Manufacturer
	Resistance	Power	Term.	Char.	Resistance	Level 1	Level 2	
Part Number	Value (Ohms)	Rating (W)	Type (^)	(@)	Tolerance (%)	(FRL) (&)	(FRL) (&)	Manufacturer
	Resistance	Power	Term.	Char.	Resistance	Level 1	Level 2	
Part Number	Value (Ohms)	Rating (W)	Type (^)	(@)	Tolerance (%)	(FRL) (&)	(FRL) (&)	Manufacturer
	Resistance	Power	Term.	Char.	Resistance	Level 1	Level 2	
Part Number	Value (Ohms)	Rating (W)	Type (^)	(@)	Tolerance (%)	(FRL) (&)	(FRL) (&)	Manufacturer

RNC90Y Film Resistors

	Resistance	Power	Resistance	Level 1	Level 2	
Part Number	Value (Ohms)	Rating (W)	Tolerance (%)	(FRL) (&)	(FRL) (&)	Manufacturer
RNC90Y4R9900%&	4.9900	0.3	V, T, A, B, D, F	S	P, R	VIS
RNC90Y5R0500%&	5.0500	0.3	V, T, A, B, D	S	P, R	VIS
RNC90Y5R1100%&	5.1100	0.3	V, T, A, B, D, F	S	P, R	VIS
RNC90Y5R1700%&	5.1700	0.3	V, T, A, B, D	S	P, R	VIS
RNC90Y5R2300%&	5.2300	0.3	V, T, A, B, D, F	S	P, R	VIS
RNC90Y5R3000%&	5.3000	0.3	V, T, A, B, D	S	P, R	VIS
RNC90Y5R3600%&	5.3600	0.3	V, T, A, B, D, F	S	P, R	VIS
RNC90Y5R4200%&	5.4200	0.3	V, T, A, B, D	S	P, R	VIS
RNC90Y5R4900%&	5.4900	0.3	V, T, A, B, D, F	S	P, R	VIS
RNC90Y5R5600%&	5.5600	0.3	V, T, A, B, D	S	P, R	VIS
RNC90Y5R6200%&	5.6200	0.3	V, T, A, B, D, F	S	P, R	VIS
RNC90Y5R6900%&	5.6900	0.3	V, T, A, B, D	S	P, R	VIS
RNC90Y5R7600%&	5.7600	0.3	V, T, A, B, D, F	S	P, R	VIS
RNC90Y5R8300%&	5.8300	0.3	V, T, A, B, D	S	P, R	VIS
RNC90Y5R9000%&	5.9000	0.3	V, T, A, B, D, F	S	P, R	VIS
RNC90Y5R9700%&	5.9700	0.3	V, T, A, B, D	S	P, R	VIS
RNC90Y6R0400%&	6.0400	0.3	V, T, A, B, D, F	S	P, R	VIS
RNC90Y6R1200%&	6.1200	0.3	V, T, A, B, D	S	P, R	VIS
RNC90Y6R1900%&	6.1900	0.3	V, T, A, B, D, F	S	P, R	VIS
RNC90Y6R2600%&	6.2600	0.3	V, T, A, B, D	S	P, R	VIS
RNC90Y6R3400%&	6.3400	0.3	V, T, A, B, D, F	S	P, R	VIS
RNC90Y6R4200%&	6.4200	0.3	V, T, A, B, D	S	P, R	VIS
RNC90Y6R4900%&	6.4900	0.3	V, T, A, B, D, F	S	P, R	VIS
RNC90Y6R5700%&	6.5700	0.3	V, T, A, B, D	S	P, R	VIS
RNC90Y6R6500%&	6.6500	0.3	V, T, A, B, D, F	S	P, R	VIS
RNC90Y6R7300%&	6.7300	0.3	V, T, A, B, D	S	P, R	VIS
RNC90Y6R8100%&	6.8100	0.3	V, T, A, B, D, F	S	P, R	VIS
RNC90Y6R9000%&	6.9000	0.3	V, T, A, B, D	S	P, R	VIS

RNC90Y6R9800%&	6.9800	0.3	V, T, A, B, D, F	S	P, R	VIS
RNC90Y7R0600%&	7.0600	0.3	V, T, A, B, D	S	P, R	VIS
RNC90Y7R1500%&	7.1500	0.3	V, T, A, B, D, F	S	P, R	VIS
RNC90Y7R2300%&	7.2300	0.3	V, T, A, B, D	S	P, R	VIS
RNC90Y7R3200%&	7.3200	0.3	V, T, A, B, D, F	S	P, R	VIS
RNC90Y7R4100%&	7.4100	0.3	V, T, A, B, D	S	P, R	VIS
RNC90Y7R5000%&	7.5000	0.3	V, T, A, B, D, F	S	P, R	VIS
RNC90Y7R5900%&	7.5900	0.3	V, T, A, B, D	S	P, R	VIS
RNC90Y7R6800%&	7.6800	0.3	V, T, A, B, D, F	S	P, R	VIS
RNC90Y7R7700%&	7.7700	0.3	V, T, A, B, D	S	P, R	VIS
RNC90Y7R8700%&	7.8700	0.3	V, T, A, B, D, F	S	P, R	VIS
RNC90Y7R9600%&	7.9600	0.3	V, T, A, B, D	S	P, R	VIS
RNC90Y8R0600%&	8.0600	0.3	V, T, A, B, D, F	S	P, R	VIS
RNC90Y8R1600%&	8.1600	0.3	V, T, A, B, D	S	P, R	VIS
RNC90Y8R2500%&	8.2500	0.3	V, T, A, B, D, F	S	P, R	VIS
RNC90Y8R3500%&	8.3500	0.3	V, T, A, B, D	S	P, R	VIS
RNC90Y8R4500%&	8.4500	0.3	V, T, A, B, D, F	S	P, R	VIS
RNC90Y8R5600%&	8.5600	0.3	V, T, A, B, D	S	P, R	VIS
RNC90Y8R6600%&	8.6600	0.3	V, T, A, B, D, F	S	P, R	VIS
RNC90Y8R7600%&	8.7600	0.3	V, T, A, B, D	S	P, R	VIS
RNC90Y8R8700%&	8.8700	0.3	V, T, A, B, D, F	S	P, R	VIS
RNC90Y8R9800%&	8.9800	0.3	V, T, A, B, D	S	P, R	VIS
RNC90Y9R0900%&	9.0900	0.3	V, T, A, B, D, F	S	P, R	VIS
RNC90Y9R2000%&	9.2000	0.3	V, T, A, B, D	S	P, R	VIS
RNC90Y9R3100%&	9.3100	0.3	V, T, A, B, D, F	S	P, R	VIS
RNC90Y9R4200%&	9.4200	0.3	V, T, A, B, D	S	P, R	VIS
RNC90Y9R5300%&	9.5300	0.3	V, T, A, B, D, F	S	P, R	VIS
RNC90Y9R6500%&	9.6500	0.3	V, T, A, B, D	S	P, R	VIS
RNC90Y9R7600%&	9.7600	0.3	V, T, A, B, D, F	S	P, R	VIS
RNC90Y9R8800%&	9.8800	0.3	V, T, A, B, D	S	P, R	VIS
RNC90Y10R000%&	10.000	0.3	V, T, A, B, D, F	S	P, R	VIS
RNC90Y10R100%&	10.100	0.3	V, T, A, B, D	S	P, R	VIS
RNC90Y10R200%&	10.200	0.3	V, T, A, B, D, F	S	P, R	VIS
RNC90Y10R400%&	10.400	0.3	V, T, A, B, D	S	P, R	VIS
RNC90Y10R500%&	10.500	0.3	V, T, A, B, D, F	S	P, R	VIS
RNC90Y10R600%&	10.600	0.3	V, T, A, B, D	S	P, R	VIS
RNC90Y10R700%&	10.700	0.3	V, T, A, B, D, F	S	P, R	VIS
RNC90Y10R900%&	10.900	0.3	V, T, A, B, D	S	P, R	VIS
RNC90Y11R000%&	11.000	0.3	V, T, A, B, D, F	S	P, R	VIS
RNC90Y11R100%&	11.100	0.3	V, T, A, B, D	S	P, R	VIS
RNC90Y11R300%&	11.300	0.3	V, T, A, B, D, F	S	P, R	VIS
RNC90Y11R400%&	11.400	0.3	V, T, A, B, D	S	P, R	VIS
RNC90Y11R500%&	11.500	0.3	V, T, A, B, D, F	S	P, R	VIS
RNC90Y11R700%&	11.700	0.3	V, T, A, B, D	S	P, R	VIS
RNC90Y11R800%&	11.800	0.3	V, T, A, B, D, F	S	P, R	VIS
RNC90Y12R000%&	12.000	0.3	V, T, A, B, D	S	P, R	VIS
RNC90Y12R100%&	12.100	0.3	V, T, A, B, D, F	S	P, R	VIS

RNC90Y12R300%&	12.300	0.3	V, T, A, B, D	S	P, R	VIS
RNC90Y12R400%&	12.400	0.3	V, T, A, B, D, F	S	P, R	VIS
RNC90Y12R600%&	12.600	0.3	V, T, A, B, D	S	P, R	VIS
RNC90Y12R700%&	12.700	0.3	V, T, A, B, D, F	S	P, R	VIS
RNC90Y12R900%&	12.900	0.3	V, T, A, B, D	S	P, R	VIS
RNC90Y13R000%&	13.000	0.3	V, T, A, B, D, F	S	P, R	VIS
RNC90Y13R200%&	13.200	0.3	V, T, A, B, D	S	P, R	VIS
RNC90Y13R300%&	13.300	0.3	V, T, A, B, D, F	S	P, R	VIS
RNC90Y13R500%&	13.500	0.3	V, T, A, B, D	S	P, R	VIS
RNC90Y13R700%&	13.700	0.3	V, T, A, B, D, F	S	P, R	VIS
RNC90Y13R800%&	13.800	0.3	V, T, A, B, D	S	P, R	VIS
RNC90Y14R000%&	14.000	0.3	V, T, A, B, D, F	S	P, R	VIS
RNC90Y14R200%&	14.200	0.3	V, T, A, B, D	S	P, R	VIS
RNC90Y14R300%&	14.300	0.3	V, T, A, B, D, F	S	P, R	VIS
RNC90Y14R500%&	14.500	0.3	V, T, A, B, D	S	P, R	VIS
RNC90Y14R700%&	14.700	0.3	V, T, A, B, D, F	S	P, R	VIS
RNC90Y14R900%&	14.900	0.3	V, T, A, B, D	S	P, R	VIS
RNC90Y15R000%&	15.000	0.3	V, T, A, B, D, F	S	P, R	VIS
RNC90Y15R200%&	15.200	0.3	V, T, A, B, D	S	P, R	VIS
RNC90Y15R400%&	15.400	0.3	V, T, A, B, D, F	S	P, R	VIS
RNC90Y15R600%&	15.600	0.3	V, T, A, B, D	S	P, R	VIS
RNC90Y15R800%&	15.800	0.3	V, T, A, B, D, F	S	P, R	VIS
RNC90Y16R000%&	16.000	0.3	V, T, A, B, D	S	P, R	VIS
RNC90Y16R200%&	16.200	0.3	V, T, A, B, D, F	S	P, R	VIS
RNC90Y16R400%&	16.400	0.3	V, T, A, B, D	S	P, R	VIS
RNC90Y16R500%&	16.500	0.3	V, T, A, B, D, F	S	P, R	VIS
RNC90Y16R700%&	16.700	0.3	V, T, A, B, D	S	P, R	VIS
RNC90Y16R900%&	16.900	0.3	V, T, A, B, D, F	S	P, R	VIS
RNC90Y17R200%&	17.200	0.3	V, T, A, B, D	S	P, R	VIS
RNC90Y17R400%&	17.400	0.3	V, T, A, B, D, F	S	P, R	VIS
RNC90Y17R600%&	17.600	0.3	V, T, A, B, D	S	P, R	VIS
RNC90Y17R800%&	17.800	0.3	V, T, A, B, D, F	S	P, R	VIS
RNC90Y18R000%&	18.000	0.3	V, T, A, B, D	S	P, R	VIS
RNC90Y18R200%&	18.200	0.3	V, T, A, B, D, F	S	P, R	VIS
RNC90Y18R400%&	18.400	0.3	V, T, A, B, D	S	P, R	VIS
RNC90Y18R700%&	18.700	0.3	V, T, A, B, D, F	S	P, R	VIS
RNC90Y18R900%&	18.900	0.3	V, T, A, B, D	S	P, R	VIS
RNC90Y19R100%&	19.100	0.3	V, T, A, B, D, F	S	P, R	VIS
RNC90Y19R300%&	19.300	0.3	V, T, A, B, D	S	P, R	VIS
RNC90Y19R600%&	19.600	0.3	V, T, A, B, D, F	S	P, R	VIS
RNC90Y19R800%&	19.800	0.3	V, T, A, B, D	S	P, R	VIS
RNC90Y20R000%&	20.000	0.3	V, T, A, B, D, F	S	P, R	VIS
RNC90Y20R300%&	20.300	0.3	V, T, A, B, D	S	P, R	VIS
RNC90Y20R500%&	20.500	0.3	V, T, A, B, D, F	S	P, R	VIS
RNC90Y20R800%&	20.800	0.3	V, T, A, B, D	S	P, R	VIS
RNC90Y21R000%&	21.000	0.3	V, T, A, B, D, F	S	P, R	VIS
RNC90Y21R300%&	21.300	0.3	V, T, A, B, D	S	P, R	VIS

RNC90Y21R500%&	21.500	0.3	V, T, A, B, D, F	S	P, R	VIS
RNC90Y21R800%&	21.800	0.3	V, T, A, B, D	S	P, R	VIS
RNC90Y22R100%&	22.100	0.3	V, T, A, B, D, F	S	P, R	VIS
RNC90Y22R300%&	22.300	0.3	V, T, A, B, D	S	P, R	VIS
RNC90Y22R600%&	22.600	0.3	V, T, A, B, D, F	S	P, R	VIS
RNC90Y22R900%&	22.900	0.3	V, T, A, B, D	S	P, R	VIS
RNC90Y23R200%&	23.200	0.3	V, T, A, B, D, F	S	P, R	VIS
RNC90Y23R400%&	23.400	0.3	V, T, A, B, D	S	P, R	VIS
RNC90Y23R700%&	23.700	0.3	V, T, A, B, D, F	S	P, R	VIS
RNC90Y24R000%&	24.000	0.3	V, T, A, B, D	S	P, R	VIS
RNC90Y24R300%&	24.300	0.3	V, T, A, B, D, F	S	P, R	VIS
RNC90Y24R600%&	24.600	0.3	V, T, A, B, D	S	P, R	VIS
RNC90Y24R900%&	24.900	0.3	V, T, A, B, D, F	S	P, R	VIS
RNC90Y25R200%&	25.200	0.3	V, T, A, B, D	S	P, R	VIS
RNC90Y25R500%&	25.500	0.3	V, T, A, B, D, F	S	P, R	VIS
RNC90Y25R800%&	25.800	0.3	V, T, A, B, D	S	P, R	VIS
RNC90Y26R100%&	26.100	0.3	V, T, A, B, D, F	S	P, R	VIS
RNC90Y26R400%&	26.400	0.3	V, T, A, B, D	S	P, R	VIS
RNC90Y26R700%&	26.700	0.3	V, T, A, B, D, F	S	P, R	VIS
RNC90Y27R100%&	27.100	0.3	V, T, A, B, D	S	P, R	VIS
RNC90Y27R400%&	27.400	0.3	V, T, A, B, D, F	S	P, R	VIS
RNC90Y27R700%&	27.700	0.3	V, T, A, B, D	S	P, R	VIS
RNC90Y28R000%&	28.000	0.3	V, T, A, B, D, F	S	P, R	VIS
RNC90Y28R400%&	28.400	0.3	V, T, A, B, D	S	P, R	VIS
RNC90Y28R700%&	28.700	0.3	V, T, A, B, D, F	S	P, R	VIS
RNC90Y29R100%&	29.100	0.3	V, T, A, B, D	S	P, R	VIS
RNC90Y29R400%&	29.400	0.3	V, T, A, B, D, F	S	P, R	VIS
RNC90Y29R800%&	29.800	0.3	V, T, A, B, D	S	P, R	VIS
RNC90Y30R100%&	30.100	0.3	V, T, A, B, D, F	S	P, R	VIS
RNC90Y30R500%&	30.500	0.3	V, T, A, B, D	S	P, R	VIS
RNC90Y30R900%&	30.900	0.3	V, T, A, B, D, F	S	P, R	VIS
RNC90Y31R200%&	31.200	0.3	V, T, A, B, D	S	P, R	VIS
RNC90Y31R600%&	31.600	0.3	V, T, A, B, D, F	S	P, R	VIS
RNC90Y32R000%&	32.000	0.3	V, T, A, B, D	S	P, R	VIS
RNC90Y32R400%&	32.400	0.3	V, T, A, B, D, F	S	P, R	VIS
RNC90Y32R800%&	32.800	0.3	V, T, A, B, D	S	P, R	VIS
RNC90Y33R200%&	33.200	0.3	V, T, A, B, D, F	S	P, R	VIS
RNC90Y33R600%&	33.600	0.3	V, T, A, B, D	S	P, R	VIS
RNC90Y34R000%&	34.000	0.3	V, T, A, B, D, F	S	P, R	VIS
RNC90Y34R400%&	34.400	0.3	V, T, A, B, D	S	P, R	VIS
RNC90Y34R800%&	34.800	0.3	V, T, A, B, D, F	S	P, R	VIS
RNC90Y35R200%&	35.200	0.3	V, T, A, B, D	S	P, R	VIS
RNC90Y35R700%&	35.700	0.3	V, T, A, B, D, F	S	P, R	VIS
RNC90Y36R100%&	36.100	0.3	V, T, A, B, D	S	P, R	VIS
RNC90Y36R500%&	36.500	0.3	V, T, A, B, D, F	S	P, R	VIS
RNC90Y37R000%&	37.000	0.3	V, T, A, B, D	S	P, R	VIS
RNC90Y37R400%&	37.400	0.3	V, T, A, B, D, F	S	P, R	VIS

RNC90Y37R900%&	37.900	0.3	V, T, A, B, D	S	P, R	VIS
RNC90Y38R300%&	38.300	0.3	V, T, A, B, D, F	S	P, R	VIS
RNC90Y38R800%&	38.800	0.3	V, T, A, B, D	S	P, R	VIS
RNC90Y39R200%&	39.200	0.3	V, T, A, B, D, F	S	P, R	VIS
RNC90Y39R700%&	39.700	0.3	V, T, A, B, D	S	P, R	VIS
RNC90Y40R200%&	40.200	0.3	V, T, A, B, D, F	S	P, R	VIS
RNC90Y40R700%&	40.700	0.3	V, T, A, B, D	S	P, R	VIS
RNC90Y41R200%&	41.200	0.3	V, T, A, B, D, F	S	P, R	VIS
RNC90Y41R700%&	41.700	0.3	V, T, A, B, D	S	P, R	VIS
RNC90Y42R200%&	42.200	0.3	V, T, A, B, D, F	S	P, R	VIS
RNC90Y42R700%&	42.700	0.3	V, T, A, B, D	S	P, R	VIS
RNC90Y43R200%&	43.200	0.3	V, T, A, B, D, F	S	P, R	VIS
RNC90Y43R700%&	43.700	0.3	V, T, A, B, D	S	P, R	VIS
RNC90Y44R200%&	44.200	0.3	V, T, A, B, D, F	S	P, R	VIS
RNC90Y44R800%&	44.800	0.3	V, T, A, B, D	S	P, R	VIS
RNC90Y45R300%&	45.300	0.3	V, T, A, B, D, F	S	P, R	VIS
RNC90Y45R900%&	45.900	0.3	V, T, A, B, D	S	P, R	VIS
RNC90Y46R400%&	46.400	0.3	V, T, A, B, D, F	S	P, R	VIS
RNC90Y47R000%&	47.000	0.3	V, T, A, B, D	S	P, R	VIS
RNC90Y47R500%&	47.500	0.3	V, T, A, B, D, F	S	P, R	VIS
RNC90Y48R100%&	48.100	0.3	V, T, A, B, D	S	P, R	VIS
RNC90Y48R700%&	48.700	0.3	V, T, A, B, D, F	S	P, R	VIS
RNC90Y49R300%&	49.300	0.3	V, T, A, B, D	S	P, R	VIS
RNC90Y49R900%&	49.900	0.3	V, T, A, B, D, F	S	P, R	VIS
RNC90Y50R500%&	50.500	0.3	V, T, A, B, D	S	P, R	VIS
RNC90Y51R100%&	51.100	0.3	V, T, A, B, D, F	S	P, R	VIS
RNC90Y51R700%&	51.700	0.3	V, T, A, B, D	S	P, R	VIS
RNC90Y52R300%&	52.300	0.3	V, T, A, B, D, F	S	P, R	VIS
RNC90Y53R000%&	53.000	0.3	V, T, A, B, D	S	P, R	VIS
RNC90Y53R600%&	53.600	0.3	V, T, A, B, D, F	S	P, R	VIS
RNC90Y54R200%&	54.200	0.3	V, T, A, B, D	S	P, R	VIS
RNC90Y54R900%&	54.900	0.3	V, T, A, B, D, F	S	P, R	VIS
RNC90Y55R600%&	55.600	0.3	V, T, A, B, D	S	P, R	VIS
RNC90Y56R200%&	56.200	0.3	V, T, A, B, D, F	S	P, R	VIS
RNC90Y56R900%&	56.900	0.3	V, T, A, B, D	S	P, R	VIS
RNC90Y57R600%&	57.600	0.3	V, T, A, B, D, F	S	P, R	VIS
RNC90Y58R300%&	58.300	0.3	V, T, A, B, D	S	P, R	VIS
RNC90Y59R000%&	59.000	0.3	V, T, A, B, D, F	S	P, R	VIS
RNC90Y59R700%&	59.700	0.3	V, T, A, B, D	S	P, R	VIS
RNC90Y60R400%&	60.400	0.3	V, T, A, B, D, F	S	P, R	VIS
RNC90Y61R200%&	61.200	0.3	V, T, A, B, D	S	P, R	VIS
RNC90Y61R900%&	61.900	0.3	V, T, A, B, D, F	S	P, R	VIS
RNC90Y62R600%&	62.600	0.3	V, T, A, B, D	S	P, R	VIS
RNC90Y63R400%&	63.400	0.3	V, T, A, B, D, F	S	P, R	VIS
RNC90Y64R200%&	64.200	0.3	V, T, A, B, D	S	P, R	VIS
RNC90Y64R900%&	64.900	0.3	V, T, A, B, D, F	S	P, R	VIS
RNC90Y65R700%&	65.700	0.3	V, T, A, B, D	S	P, R	VIS

RNC90Y66R500%&	66.500	0.3	V, T, A, B, D, F	S	P, R	VIS
RNC90Y67R300%&	67.300	0.3	V, T, A, B, D	S	P, R	VIS
RNC90Y68R100%&	68.100	0.3	V, T, A, B, D, F	S	P, R	VIS
RNC90Y69R000%&	69.000	0.3	V, T, A, B, D	S	P, R	VIS
RNC90Y69R800%&	69.800	0.3	V, T, A, B, D, F	S	P, R	VIS
RNC90Y70R600%&	70.600	0.3	V, T, A, B, D	S	P, R	VIS
RNC90Y71R500%&	71.500	0.3	V, T, A, B, D, F	S	P, R	VIS
RNC90Y72R300%&	72.300	0.3	V, T, A, B, D	S	P, R	VIS
RNC90Y73R200%&	73.200	0.3	V, T, A, B, D, F	S	P, R	VIS
RNC90Y74R100%&	74.100	0.3	V, T, A, B, D	S	P, R	VIS
RNC90Y75R000%&	75.000	0.3	V, T, A, B, D, F	S	P, R	VIS
RNC90Y75R900%&	75.900	0.3	V, T, A, B, D	S	P, R	VIS
RNC90Y76R800%&	76.800	0.3	V, T, A, B, D, F	S	P, R	VIS
RNC90Y77R700%&	77.700	0.3	V, T, A, B, D	S	P, R	VIS
RNC90Y78R700%&	78.700	0.3	V, T, A, B, D, F	S	P, R	VIS
RNC90Y79R600%&	79.600	0.3	V, T, A, B, D	S	P, R	VIS
RNC90Y80R600%&	80.600	0.3	V, T, A, B, D, F	S	P, R	VIS
RNC90Y81R600%&	81.600	0.3	V, T, A, B, D	S	P, R	VIS
RNC90Y82R500%&	82.500	0.3	V, T, A, B, D, F	S	P, R	VIS
RNC90Y83R500%&	83.500	0.3	V, T, A, B, D	S	P, R	VIS
RNC90Y84R500%&	84.500	0.3	V, T, A, B, D, F	S	P, R	VIS
RNC90Y85R600%&	85.600	0.3	V, T, A, B, D	S	P, R	VIS
RNC90Y86R600%&	86.600	0.3	V, T, A, B, D, F	S	P, R	VIS
RNC90Y87R600%&	87.600	0.3	V, T, A, B, D	S	P, R	VIS
RNC90Y88R700%&	88.700	0.3	V, T, A, B, D, F	S	P, R	VIS
RNC90Y89R800%&	89.800	0.3	V, T, A, B, D	S	P, R	VIS
RNC90Y90R900%&	90.900	0.3	V, T, A, B, D, F	S	P, R	VIS
RNC90Y92R000%&	92.000	0.3	V, T, A, B, D	S	P, R	VIS
RNC90Y93R100%&	93.100	0.3	V, T, A, B, D, F	S	P, R	VIS
RNC90Y94R200%&	94.200	0.3	V, T, A, B, D	S	P, R	VIS
RNC90Y95R300%&	95.300	0.3	V, T, A, B, D, F	S	P, R	VIS
RNC90Y96R500%&	96.500	0.3	V, T, A, B, D	S	P, R	VIS
RNC90Y97R600%&	97.600	0.3	V, T, A, B, D, F	S	P, R	VIS
RNC90Y98R800%&	98.800	0.3	V, T, A, B, D	S	P, R	VIS
RNC90Y100R00%&	100.00	0.3	V, T, A, B, D, F	S	P, R	VIS
RNC90Y101R00%&	101.00	0.3	V, T, A, B, D	S	P, R	VIS
RNC90Y102R00%&	102.00	0.3	V, T, A, B, D, F	S	P, R	VIS
RNC90Y104R00%&	104.00	0.3	V, T, A, B, D	S	P, R	VIS
RNC90Y105R00%&	105.00	0.3	V, T, A, B, D, F	S	P, R	VIS
RNC90Y106R00%&	106.00	0.3	V, T, A, B, D	S	P, R	VIS
RNC90Y107R00%&	107.00	0.3	V, T, A, B, D, F	S	P, R	VIS
RNC90Y109R00%&	109.00	0.3	V, T, A, B, D	S	P, R	VIS
RNC90Y110R00%&	110.00	0.3	V, T, A, B, D, F	S	P, R	VIS
RNC90Y111R00%&	111.00	0.3	V, T, A, B, D	S	P, R	VIS
RNC90Y113R00%&	113.00	0.3	V, T, A, B, D, F	S	P, R	VIS
RNC90Y114R00%&	114.00	0.3	V, T, A, B, D	S	P, R	VIS
RNC90Y115R00%&	115.00	0.3	V, T, A, B, D, F	S	P, R	VIS

RNC90Y117R00%&	117.00	0.3	V, T, A, B, D	S	P, R	VIS
RNC90Y118R00%&	118.00	0.3	V, T, A, B, D, F	S	P, R	VIS
RNC90Y120R00%&	120.00	0.3	V, T, A, B, D	S	P, R	VIS
RNC90Y121R00%&	121.00	0.3	V, T, A, B, D, F	S	P, R	VIS
RNC90Y123R00%&	123.00	0.3	V, T, A, B, D	S	P, R	VIS
RNC90Y124R00%&	124.00	0.3	V, T, A, B, D, F	S	P, R	VIS
RNC90Y126R00%&	126.00	0.3	V, T, A, B, D	S	P, R	VIS
RNC90Y127R00%&	127.00	0.3	V, T, A, B, D, F	S	P, R	VIS
RNC90Y129R00%&	129.00	0.3	V, T, A, B, D	S	P, R	VIS
RNC90Y130R00%&	130.00	0.3	V, T, A, B, D, F	S	P, R	VIS
RNC90Y132R00%&	132.00	0.3	V, T, A, B, D	S	P, R	VIS
RNC90Y133R00%&	133.00	0.3	V, T, A, B, D, F	S	P, R	VIS
RNC90Y135R00%&	135.00	0.3	V, T, A, B, D	S	P, R	VIS
RNC90Y137R00%&	137.00	0.3	V, T, A, B, D, F	S	P, R	VIS
RNC90Y138R00%&	138.00	0.3	V, T, A, B, D	S	P, R	VIS
RNC90Y140R00%&	140.00	0.3	V, T, A, B, D, F	S	P, R	VIS
RNC90Y142R00%&	142.00	0.3	V, T, A, B, D	S	P, R	VIS
RNC90Y143R00%&	143.00	0.3	V, T, A, B, D, F	S	P, R	VIS
RNC90Y145R00%&	145.00	0.3	V, T, A, B, D	S	P, R	VIS
RNC90Y147R00%&	147.00	0.3	V, T, A, B, D, F	S	P, R	VIS
RNC90Y149R00%&	149.00	0.3	V, T, A, B, D	S	P, R	VIS
RNC90Y150R00%&	150.00	0.3	V, T, A, B, D, F	S	P, R	VIS
RNC90Y152R00%&	152.00	0.3	V, T, A, B, D	S	P, R	VIS
RNC90Y154R00%&	154.00	0.3	V, T, A, B, D, F	S	P, R	VIS
RNC90Y156R00%&	156.00	0.3	V, T, A, B, D	S	P, R	VIS
RNC90Y158R00%&	158.00	0.3	V, T, A, B, D, F	S	P, R	VIS
RNC90Y160R00%&	160.00	0.3	V, T, A, B, D	S	P, R	VIS
RNC90Y162R00%&	162.00	0.3	V, T, A, B, D, F	S	P, R	VIS
RNC90Y164R00%&	164.00	0.3	V, T, A, B, D	S	P, R	VIS
RNC90Y165R00%&	165.00	0.3	V, T, A, B, D, F	S	P, R	VIS
RNC90Y167R00%&	167.00	0.3	V, T, A, B, D	S	P, R	VIS
RNC90Y169R00%&	169.00	0.3	V, T, A, B, D, F	S	P, R	VIS
RNC90Y172R00%&	172.00	0.3	V, T, A, B, D	S	P, R	VIS
RNC90Y174R00%&	174.00	0.3	V, T, A, B, D, F	S	P, R	VIS
RNC90Y176R00%&	176.00	0.3	V, T, A, B, D	S	P, R	VIS
RNC90Y178R00%&	178.00	0.3	V, T, A, B, D, F	S	P, R	VIS
RNC90Y180R00%&	180.00	0.3	V, T, A, B, D	S	P, R	VIS
RNC90Y182R00%&	182.00	0.3	V, T, A, B, D, F	S	P, R	VIS
RNC90Y184R00%&	184.00	0.3	V, T, A, B, D	S	P, R	VIS
RNC90Y187R00%&	187.00	0.3	V, T, A, B, D, F	S	P, R	VIS
RNC90Y189R00%&	189.00	0.3	V, T, A, B, D	S	P, R	VIS
RNC90Y191R00%&	191.00	0.3	V, T, A, B, D, F	S	P, R	VIS
RNC90Y193R00%&	193.00	0.3	V, T, A, B, D	S	P, R	VIS
RNC90Y196R00%&	196.00	0.3	V, T, A, B, D, F	S	P, R	VIS
RNC90Y198R00%&	198.00	0.3	V, T, A, B, D	S	P, R	VIS
RNC90Y200R00%&	200.00	0.3	V, T, A, B, D, F	S	P, R	VIS
RNC90Y203R00%&	203.00	0.3	V, T, A, B, D	S	P, R	VIS

RNC90Y205R00%&	205.00	0.3	V, T, A, B, D, F	S	P, R	VIS
RNC90Y208R00%&	208.00	0.3	V, T, A, B, D	S	P, R	VIS
RNC90Y210R00%&	210.00	0.3	V, T, A, B, D, F	S	P, R	VIS
RNC90Y213R00%&	213.00	0.3	V, T, A, B, D	S	P, R	VIS
RNC90Y215R00%&	215.00	0.3	V, T, A, B, D, F	S	P, R	VIS
RNC90Y218R00%&	218.00	0.3	V, T, A, B, D	S	P, R	VIS
RNC90Y221R00%&	221.00	0.3	V, T, A, B, D, F	S	P, R	VIS
RNC90Y223R00%&	223.00	0.3	V, T, A, B, D	S	P, R	VIS
RNC90Y226R00%&	226.00	0.3	V, T, A, B, D, F	S	P, R	VIS
RNC90Y229R00%&	229.00	0.3	V, T, A, B, D	S	P, R	VIS
RNC90Y232R00%&	232.00	0.3	V, T, A, B, D, F	S	P, R	VIS
RNC90Y234R00%&	234.00	0.3	V, T, A, B, D	S	P, R	VIS
RNC90Y237R00%&	237.00	0.3	V, T, A, B, D, F	S	P, R	VIS
RNC90Y240R00%&	240.00	0.3	V, T, A, B, D	S	P, R	VIS
RNC90Y243R00%&	243.00	0.3	V, T, A, B, D, F	S	P, R	VIS
RNC90Y246R00%&	246.00	0.3	V, T, A, B, D	S	P, R	VIS
RNC90Y249R00%&	249.00	0.3	V, T, A, B, D, F	S	P, R	VIS
RNC90Y252R00%&	252.00	0.3	V, T, A, B, D	S	P, R	VIS
RNC90Y255R00%&	255.00	0.3	V, T, A, B, D, F	S	P, R	VIS
RNC90Y258R00%&	258.00	0.3	V, T, A, B, D	S	P, R	VIS
RNC90Y261R00%&	261.00	0.3	V, T, A, B, D, F	S	P, R	VIS
RNC90Y264R00%&	264.00	0.3	V, T, A, B, D	S	P, R	VIS
RNC90Y267R00%&	267.00	0.3	V, T, A, B, D, F	S	P, R	VIS
RNC90Y271R00%&	271.00	0.3	V, T, A, B, D	S	P, R	VIS
RNC90Y274R00%&	274.00	0.3	V, T, A, B, D, F	S	P, R	VIS
RNC90Y277R00%&	277.00	0.3	V, T, A, B, D	S	P, R	VIS
RNC90Y280R00%&	280.00	0.3	V, T, A, B, D, F	S	P, R	VIS
RNC90Y284R00%&	284.00	0.3	V, T, A, B, D	S	P, R	VIS
RNC90Y287R00%&	287.00	0.3	V, T, A, B, D, F	S	P, R	VIS
RNC90Y291R00%&	291.00	0.3	V, T, A, B, D	S	P, R	VIS
RNC90Y294R00%&	294.00	0.3	V, T, A, B, D, F	S	P, R	VIS
RNC90Y298R00%&	298.00	0.3	V, T, A, B, D	S	P, R	VIS
RNC90Y301R00%&	301.00	0.3	V, T, A, B, D, F	S	P, R	VIS
RNC90Y305R00%&	305.00	0.3	V, T, A, B, D	S	P, R	VIS
RNC90Y309R00%&	309.00	0.3	V, T, A, B, D, F	S	P, R	VIS
RNC90Y312R00%&	312.00	0.3	V, T, A, B, D	S	P, R	VIS
RNC90Y316R00%&	316.00	0.3	V, T, A, B, D, F	S	P, R	VIS
RNC90Y320R00%&	320.00	0.3	V, T, A, B, D	S	P, R	VIS
RNC90Y324R00%&	324.00	0.3	V, T, A, B, D, F	S	P, R	VIS
RNC90Y328R00%&	328.00	0.3	V, T, A, B, D	S	P, R	VIS
RNC90Y332R00%&	332.00	0.3	V, T, A, B, D, F	S	P, R	VIS
RNC90Y336R00%&	336.00	0.3	V, T, A, B, D	S	P, R	VIS
RNC90Y340R00%&	340.00	0.3	V, T, A, B, D, F	S	P, R	VIS
RNC90Y344R00%&	344.00	0.3	V, T, A, B, D	S	P, R	VIS
RNC90Y348R00%&	348.00	0.3	V, T, A, B, D, F	S	P, R	VIS
RNC90Y352R00%&	352.00	0.3	V, T, A, B, D	S	P, R	VIS
RNC90Y357R00%&	357.00	0.3	V, T, A, B, D, F	S	P, R	VIS

RNC90Y361R00%&	361.00	0.3	V, T, A, B, D	S	P, R	VIS
RNC90Y365R00%&	365.00	0.3	V, T, A, B, D, F	S	P, R	VIS
RNC90Y370R00%&	370.00	0.3	V, T, A, B, D	S	P, R	VIS
RNC90Y374R00%&	374.00	0.3	V, T, A, B, D, F	S	P, R	VIS
RNC90Y379R00%&	379.00	0.3	V, T, A, B, D	S	P, R	VIS
RNC90Y383R00%&	383.00	0.3	V, T, A, B, D, F	S	P, R	VIS
RNC90Y388R00%&	388.00	0.3	V, T, A, B, D	S	P, R	VIS
RNC90Y392R00%&	392.00	0.3	V, T, A, B, D, F	S	P, R	VIS
RNC90Y397R00%&	397.00	0.3	V, T, A, B, D	S	P, R	VIS
RNC90Y402R00%&	402.00	0.3	V, T, A, B, D, F	S	P, R	VIS
RNC90Y407R00%&	407.00	0.3	V, T, A, B, D	S	P, R	VIS
RNC90Y412R00%&	412.00	0.3	V, T, A, B, D, F	S	P, R	VIS
RNC90Y417R00%&	417.00	0.3	V, T, A, B, D	S	P, R	VIS
RNC90Y422R00%&	422.00	0.3	V, T, A, B, D, F	S	P, R	VIS
RNC90Y427R00%&	427.00	0.3	V, T, A, B, D	S	P, R	VIS
RNC90Y432R00%&	432.00	0.3	V, T, A, B, D, F	S	P, R	VIS
RNC90Y437R00%&	437.00	0.3	V, T, A, B, D	S	P, R	VIS
RNC90Y442R00%&	442.00	0.3	V, T, A, B, D, F	S	P, R	VIS
RNC90Y448R00%&	448.00	0.3	V, T, A, B, D	S	P, R	VIS
RNC90Y453R00%&	453.00	0.3	V, T, A, B, D, F	S	P, R	VIS
RNC90Y459R00%&	459.00	0.3	V, T, A, B, D	S	P, R	VIS
RNC90Y464R00%&	464.00	0.3	V, T, A, B, D, F	S	P, R	VIS
RNC90Y470R00%&	470.00	0.3	V, T, A, B, D	S	P, R	VIS
RNC90Y475R00%&	475.00	0.3	V, T, A, B, D, F	S	P, R	VIS
RNC90Y481R00%&	481.00	0.3	V, T, A, B, D	S	P, R	VIS
RNC90Y487R00%&	487.00	0.3	V, T, A, B, D, F	S	P, R	VIS
RNC90Y493R00%&	493.00	0.3	V, T, A, B, D	S	P, R	VIS
RNC90Y499R00%&	499.00	0.3	V, T, A, B, D, F	S	P, R	VIS
RNC90Y505R00%&	505.00	0.3	V, T, A, B, D	S	P, R	VIS
RNC90Y511R00%&	511.00	0.3	V, T, A, B, D, F	S	P, R	VIS
RNC90Y517R00%&	517.00	0.3	V, T, A, B, D	S	P, R	VIS
RNC90Y523R00%&	523.00	0.3	V, T, A, B, D, F	S	P, R	VIS
RNC90Y530R00%&	530.00	0.3	V, T, A, B, D	S	P, R	VIS
RNC90Y536R00%&	536.00	0.3	V, T, A, B, D, F	S	P, R	VIS
RNC90Y542R00%&	542.00	0.3	V, T, A, B, D	S	P, R	VIS
RNC90Y549R00%&	549.00	0.3	V, T, A, B, D, F	S	P, R	VIS
RNC90Y556R00%&	556.00	0.3	V, T, A, B, D	S	P, R	VIS
RNC90Y562R00%&	562.00	0.3	V, T, A, B, D, F	S	P, R	VIS
RNC90Y569R00%&	569.00	0.3	V, T, A, B, D	S	P, R	VIS
RNC90Y576R00%&	576.00	0.3	V, T, A, B, D, F	S	P, R	VIS
RNC90Y583R00%&	583.00	0.3	V, T, A, B, D	S	P, R	VIS
RNC90Y590R00%&	590.00	0.3	V, T, A, B, D, F	S	P, R	VIS
RNC90Y597R00%&	597.00	0.3	V, T, A, B, D	S	P, R	VIS
RNC90Y604R00%&	604.00	0.3	V, T, A, B, D, F	S	P, R	VIS
RNC90Y612R00%&	612.00	0.3	V, T, A, B, D	S	P, R	VIS
RNC90Y619R00%&	619.00	0.3	V, T, A, B, D, F	S	P, R	VIS
RNC90Y626R00%&	626.00	0.3	V, T, A, B, D	S	P, R	VIS

RNC90Y634R00%&	634.00	0.3	V, T, A, B, D, F	S	P, R	VIS
RNC90Y642R00%&	642.00	0.3	V, T, A, B, D	S	P, R	VIS
RNC90Y649R00%&	649.00	0.3	V, T, A, B, D, F	S	P, R	VIS
RNC90Y657R00%&	657.00	0.3	V, T, A, B, D	S	P, R	VIS
RNC90Y665R00%&	665.00	0.3	V, T, A, B, D, F	S	P, R	VIS
RNC90Y673R00%&	673.00	0.3	V, T, A, B, D	S	P, R	VIS
RNC90Y681R00%&	681.00	0.3	V, T, A, B, D, F	S	P, R	VIS
RNC90Y690R00%&	690.00	0.3	V, T, A, B, D	S	P, R	VIS
RNC90Y698R00%&	698.00	0.3	V, T, A, B, D, F	S	P, R	VIS
RNC90Y706R00%&	706.00	0.3	V, T, A, B, D	S	P, R	VIS
RNC90Y715R00%&	715.00	0.3	V, T, A, B, D, F	S	P, R	VIS
RNC90Y723R00%&	723.00	0.3	V, T, A, B, D	S	P, R	VIS
RNC90Y732R00%&	732.00	0.3	V, T, A, B, D, F	S	P, R	VIS
RNC90Y741R00%&	741.00	0.3	V, T, A, B, D	S	P, R	VIS
RNC90Y750R00%&	750.00	0.3	V, T, A, B, D, F	S	P, R	VIS
RNC90Y759R00%&	759.00	0.3	V, T, A, B, D	S	P, R	VIS
RNC90Y767R00%&	767.00	0.3	V, T, A, B, D, F	S	P, R	VIS
RNC90Y776R00%&	776.00	0.3	V, T, A, B, D	S	P, R	VIS
RNC90Y786R00%&	786.00	0.3	V, T, A, B, D, F	S	P, R	VIS
RNC90Y795R00%&	795.00	0.3	V, T, A, B, D	S	P, R	VIS
RNC90Y805R00%&	805.00	0.3	V, T, A, B, D, F	S	P, R	VIS
RNC90Y815R00%&	815.00	0.3	V, T, A, B, D	S	P, R	VIS
RNC90Y824R00%&	824.00	0.3	V, T, A, B, D, F	S	P, R	VIS
RNC90Y834R00%&	834.00	0.3	V, T, A, B, D	S	P, R	VIS
RNC90Y844R00%&	844.00	0.3	V, T, A, B, D, F	S	P, R	VIS
RNC90Y855R00%&	855.00	0.3	V, T, A, B, D	S	P, R	VIS
RNC90Y865R00%&	865.00	0.3	V, T, A, B, D, F	S	P, R	VIS
RNC90Y875R00%&	875.00	0.3	V, T, A, B, D	S	P, R	VIS
RNC90Y886R00%&	886.00	0.3	V, T, A, B, D, F	S	P, R	VIS
RNC90Y898R00%&	898.00	0.3	V, T, A, B, D	S	P, R	VIS
RNC90Y908R00%&	908.00	0.3	V, T, A, B, D, F	S	P, R	VIS
RNC90Y919R00%&	919.00	0.3	V, T, A, B, D	S	P, R	VIS
RNC90Y930R00%&	930.00	0.3	V, T, A, B, D, F	S	P, R	VIS
RNC90Y941R00%&	941.00	0.3	V, T, A, B, D	S	P, R	VIS
RNC90Y952R00%&	952.00	0.3	V, T, A, B, D, F	S	P, R	VIS
RNC90Y964R00%&	964.00	0.3	V, T, A, B, D	S	P, R	VIS
RNC90Y975R00%&	975.00	0.3	V, T, A, B, D, F	S	P, R	VIS
RNC90Y988R00%&	988.00	0.3	V, T, A, B, D	S	P, R	VIS
RNC90Y1K000%&	1,000.0	0.3	V, T, A, B, D, F	S	P, R	VIS
RNC90Y1K100%&	1,010.0	0.3	V, T, A, B, D	S	P, R	VIS
RNC90Y1K200%&	1,020.0	0.3	V, T, A, B, D, F	S	P, R	VIS
RNC90Y1K400%&	1,040.0	0.3	V, T, A, B, D	S	P, R	VIS
RNC90Y1K500%&	1,050.0	0.3	V, T, A, B, D, F	S	P, R	VIS
RNC90Y1K600%&	1,060.0	0.3	V, T, A, B, D	S	P, R	VIS
RNC90Y1K700%&	1,070.0	0.3	V, T, A, B, D, F	S	P, R	VIS
RNC90Y1K900%&	1,090.0	0.3	V, T, A, B, D	S	P, R	VIS
RNC90Y1K000%&	1,100.0	0.3	V, T, A, B, D, F	S	P, R	VIS

RNC90Y1K100%&	1,110.0	0.3	V, T, A, B, D	S	P, R	VIS
RNC90Y1K300%&	1,130.0	0.3	V, T, A, B, D, F	S	P, R	VIS
RNC90Y1K400%&	1,140.0	0.3	V, T, A, B, D	S	P, R	VIS
RNC90Y1K500%&	1,150.0	0.3	V, T, A, B, D, F	S	P, R	VIS
RNC90Y1K700%&	1,170.0	0.3	V, T, A, B, D	S	P, R	VIS
RNC90Y1K800%&	1,180.0	0.3	V, T, A, B, D, F	S	P, R	VIS
RNC90Y1K000%&	1,200.0	0.3	V, T, A, B, D	S	P, R	VIS
RNC90Y1K100%&	1,210.0	0.3	V, T, A, B, D, F	S	P, R	VIS
RNC90Y1K300%&	1,230.0	0.3	V, T, A, B, D	S	P, R	VIS
RNC90Y1K400%&	1,240.0	0.3	V, T, A, B, D, F	S	P, R	VIS
RNC90Y1K600%&	1,260.0	0.3	V, T, A, B, D	S	P, R	VIS
RNC90Y1K700%&	1,270.0	0.3	V, T, A, B, D, F	S	P, R	VIS
RNC90Y1K900%&	1,290.0	0.3	V, T, A, B, D	S	P, R	VIS
RNC90Y1K000%&	1,300.0	0.3	V, T, A, B, D, F	S	P, R	VIS
RNC90Y1K200%&	1,320.0	0.3	V, T, A, B, D	S	P, R	VIS
RNC90Y1K300%&	1,330.0	0.3	V, T, A, B, D, F	S	P, R	VIS
RNC90Y1K500%&	1,350.0	0.3	V, T, A, B, D	S	P, R	VIS
RNC90Y1K700%&	1,370.0	0.3	V, T, A, B, D, F	S	P, R	VIS
RNC90Y1K800%&	1,380.0	0.3	V, T, A, B, D	S	P, R	VIS
RNC90Y1K000%&	1,400.0	0.3	V, T, A, B, D, F	S	P, R	VIS
RNC90Y1K200%&	1,420.0	0.3	V, T, A, B, D	S	P, R	VIS
RNC90Y1K300%&	1,430.0	0.3	V, T, A, B, D, F	S	P, R	VIS
RNC90Y1K500%&	1,450.0	0.3	V, T, A, B, D	S	P, R	VIS
RNC90Y1K700%&	1,470.0	0.3	V, T, A, B, D, F	S	P, R	VIS
RNC90Y1K900%&	1,490.0	0.3	V, T, A, B, D	S	P, R	VIS
RNC90Y1K000%&	1,500.0	0.3	V, T, A, B, D, F	S	P, R	VIS
RNC90Y1K200%&	1,520.0	0.3	V, T, A, B, D	S	P, R	VIS
RNC90Y1K400%&	1,540.0	0.3	V, T, A, B, D, F	S	P, R	VIS
RNC90Y1K600%&	1,560.0	0.3	V, T, A, B, D	S	P, R	VIS
RNC90Y1K800%&	1,580.0	0.3	V, T, A, B, D, F	S	P, R	VIS
RNC90Y1K000%&	1,600.0	0.3	V, T, A, B, D	S	P, R	VIS
RNC90Y1K200%&	1,620.0	0.3	V, T, A, B, D, F	S	P, R	VIS
RNC90Y1K400%&	1,640.0	0.3	V, T, A, B, D	S	P, R	VIS
RNC90Y1K500%&	1,650.0	0.3	V, T, A, B, D, F	S	P, R	VIS
RNC90Y1K700%&	1,670.0	0.3	V, T, A, B, D	S	P, R	VIS
RNC90Y1K900%&	1,690.0	0.3	V, T, A, B, D, F	S	P, R	VIS
RNC90Y1K200%&	1,720.0	0.3	V, T, A, B, D	S	P, R	VIS
RNC90Y1K400%&	1,740.0	0.3	V, T, A, B, D, F	S	P, R	VIS
RNC90Y1K600%&	1,760.0	0.3	V, T, A, B, D	S	P, R	VIS
RNC90Y1K800%&	1,780.0	0.3	V, T, A, B, D, F	S	P, R	VIS
RNC90Y1K000%&	1,800.0	0.3	V, T, A, B, D	S	P, R	VIS
RNC90Y1K200%&	1,820.0	0.3	V, T, A, B, D, F	S	P, R	VIS
RNC90Y1K400%&	1,840.0	0.3	V, T, A, B, D	S	P, R	VIS
RNC90Y1K700%&	1,870.0	0.3	V, T, A, B, D, F	S	P, R	VIS
RNC90Y1K900%&	1,890.0	0.3	V, T, A, B, D	S	P, R	VIS
RNC90Y1K100%&	1,910.0	0.3	V, T, A, B, D, F	S	P, R	VIS
RNC90Y1K300%&	1,930.0	0.3	V, T, A, B, D	S	P, R	VIS

RNC90Y1K600%&	1,960.0	0.3	V, T, A, B, D, F	S	P, R	VIS
RNC90Y1K800%&	1,980.0	0.3	V, T, A, B, D	S	P, R	VIS
RNC90Y2K000%&	2,000.0	0.3	V, T, A, B, D, F	S	P, R	VIS
RNC90Y2K300%&	2,030.0	0.3	V, T, A, B, D	S	P, R	VIS
RNC90Y2K500%&	2,050.0	0.3	V, T, A, B, D, F	S	P, R	VIS
RNC90Y2K800%&	2,080.0	0.3	V, T, A, B, D	S	P, R	VIS
RNC90Y2K000%&	2,100.0	0.3	V, T, A, B, D, F	S	P, R	VIS
RNC90Y2K300%&	2,130.0	0.3	V, T, A, B, D	S	P, R	VIS
RNC90Y2K500%&	2,150.0	0.3	V, T, A, B, D, F	S	P, R	VIS
RNC90Y2K800%&	2,180.0	0.3	V, T, A, B, D	S	P, R	VIS
RNC90Y2K100%&	2,210.0	0.3	V, T, A, B, D, F	S	P, R	VIS
RNC90Y2K300%&	2,230.0	0.3	V, T, A, B, D	S	P, R	VIS
RNC90Y2K600%&	2,260.0	0.3	V, T, A, B, D, F	S	P, R	VIS
RNC90Y2K900%&	2,290.0	0.3	V, T, A, B, D	S	P, R	VIS
RNC90Y2K200%&	2,320.0	0.3	V, T, A, B, D, F	S	P, R	VIS
RNC90Y2K400%&	2,340.0	0.3	V, T, A, B, D	S	P, R	VIS
RNC90Y2K700%&	2,370.0	0.3	V, T, A, B, D, F	S	P, R	VIS
RNC90Y2K000%&	2,400.0	0.3	V, T, A, B, D	S	P, R	VIS
RNC90Y2K300%&	2,430.0	0.3	V, T, A, B, D, F	S	P, R	VIS
RNC90Y2K600%&	2,460.0	0.3	V, T, A, B, D	S	P, R	VIS
RNC90Y2K900%&	2,490.0	0.3	V, T, A, B, D, F	S	P, R	VIS
RNC90Y2K200%&	2,520.0	0.3	V, T, A, B, D	S	P, R	VIS
RNC90Y2K500%&	2,550.0	0.3	V, T, A, B, D, F	S	P, R	VIS
RNC90Y2K800%&	2,580.0	0.3	V, T, A, B, D	S	P, R	VIS
RNC90Y2K100%&	2,610.0	0.3	V, T, A, B, D, F	S	P, R	VIS
RNC90Y2K400%&	2,640.0	0.3	V, T, A, B, D	S	P, R	VIS
RNC90Y2K700%&	2,670.0	0.3	V, T, A, B, D, F	S	P, R	VIS
RNC90Y2K100%&	2,710.0	0.3	V, T, A, B, D	S	P, R	VIS
RNC90Y2K400%&	2,740.0	0.3	V, T, A, B, D, F	S	P, R	VIS
RNC90Y2K700%&	2,770.0	0.3	V, T, A, B, D	S	P, R	VIS
RNC90Y2K000%&	2,800.0	0.3	V, T, A, B, D, F	S	P, R	VIS
RNC90Y2K400%&	2,840.0	0.3	V, T, A, B, D	S	P, R	VIS
RNC90Y2K700%&	2,870.0	0.3	V, T, A, B, D, F	S	P, R	VIS
RNC90Y2K100%&	2,910.0	0.3	V, T, A, B, D	S	P, R	VIS
RNC90Y2K400%&	2,940.0	0.3	V, T, A, B, D, F	S	P, R	VIS
RNC90Y2K800%&	2,980.0	0.3	V, T, A, B, D	S	P, R	VIS
RNC90Y3K100%&	3,010.0	0.3	V, T, A, B, D, F	S	P, R	VIS
RNC90Y3K500%&	3,050.0	0.3	V, T, A, B, D	S	P, R	VIS
RNC90Y3K900%&	3,090.0	0.3	V, T, A, B, D, F	S	P, R	VIS
RNC90Y3K200%&	3,120.0	0.3	V, T, A, B, D	S	P, R	VIS
RNC90Y3K600%&	3,160.0	0.3	V, T, A, B, D, F	S	P, R	VIS
RNC90Y3K000%&	3,200.0	0.3	V, T, A, B, D	S	P, R	VIS
RNC90Y3K400%&	3,240.0	0.3	V, T, A, B, D, F	S	P, R	VIS
RNC90Y3K800%&	3,280.0	0.3	V, T, A, B, D	S	P, R	VIS
RNC90Y3K200%&	3,320.0	0.3	V, T, A, B, D, F	S	P, R	VIS
RNC90Y3K600%&	3,360.0	0.3	V, T, A, B, D	S	P, R	VIS
RNC90Y3K000%&	3,400.0	0.3	V, T, A, B, D, F	S	P, R	VIS

RNC90Y3K400%&	3,440.0	0.3	V, T, A, B, D	S	P, R	VIS
RNC90Y3K800%&	3,480.0	0.3	V, T, A, B, D, F	S	P, R	VIS
RNC90Y3K200%&	3,520.0	0.3	V, T, A, B, D	S	P, R	VIS
RNC90Y3K700%&	3,570.0	0.3	V, T, A, B, D, F	S	P, R	VIS
RNC90Y3K100%&	3,610.0	0.3	V, T, A, B, D	S	P, R	VIS
RNC90Y3K500%&	3,650.0	0.3	V, T, A, B, D, F	S	P, R	VIS
RNC90Y3K000%&	3,700.0	0.3	V, T, A, B, D	S	P, R	VIS
RNC90Y3K400%&	3,740.0	0.3	V, T, A, B, D, F	S	P, R	VIS
RNC90Y3K900%&	3,790.0	0.3	V, T, A, B, D	S	P, R	VIS
RNC90Y3K300%&	3,830.0	0.3	V, T, A, B, D, F	S	P, R	VIS
RNC90Y3K800%&	3,880.0	0.3	V, T, A, B, D	S	P, R	VIS
RNC90Y3K200%&	3,920.0	0.3	V, T, A, B, D, F	S	P, R	VIS
RNC90Y3K700%&	3,970.0	0.3	V, T, A, B, D	S	P, R	VIS
RNC90Y4K200%&	4,020.0	0.3	V, T, A, B, D, F	S	P, R	VIS
RNC90Y4K700%&	4,070.0	0.3	V, T, A, B, D	S	P, R	VIS
RNC90Y4K200%&	4,120.0	0.3	V, T, A, B, D, F	S	P, R	VIS
RNC90Y4K700%&	4,170.0	0.3	V, T, A, B, D	S	P, R	VIS
RNC90Y4K200%&	4,220.0	0.3	V, T, A, B, D, F	S	P, R	VIS
RNC90Y4K700%&	4,270.0	0.3	V, T, A, B, D	S	P, R	VIS
RNC90Y4K200%&	4,320.0	0.3	V, T, A, B, D, F	S	P, R	VIS
RNC90Y4K700%&	4,370.0	0.3	V, T, A, B, D	S	P, R	VIS
RNC90Y4K200%&	4,420.0	0.3	V, T, A, B, D, F	S	P, R	VIS
RNC90Y4K800%&	4,480.0	0.3	V, T, A, B, D	S	P, R	VIS
RNC90Y4K300%&	4,530.0	0.3	V, T, A, B, D, F	S	P, R	VIS
RNC90Y4K900%&	4,590.0	0.3	V, T, A, B, D	S	P, R	VIS
RNC90Y4K400%&	4,640.0	0.3	V, T, A, B, D, F	S	P, R	VIS
RNC90Y4K000%&	4,700.0	0.3	V, T, A, B, D	S	P, R	VIS
RNC90Y4K500%&	4,750.0	0.3	V, T, A, B, D, F	S	P, R	VIS
RNC90Y4K100%&	4,810.0	0.3	V, T, A, B, D	S	P, R	VIS
RNC90Y4K700%&	4,870.0	0.3	V, T, A, B, D, F	S	P, R	VIS
RNC90Y4K300%&	4,930.0	0.3	V, T, A, B, D	S	P, R	VIS
RNC90Y4K900%&	4,990.0	0.3	V, T, A, B, D, F	S	P, R	VIS
RNC90Y5K500%&	5,050.0	0.3	V, T, A, B, D	S	P, R	VIS
RNC90Y5K100%&	5,110.0	0.3	V, T, A, B, D, F	S	P, R	VIS
RNC90Y5K700%&	5,170.0	0.3	V, T, A, B, D	S	P, R	VIS
RNC90Y5K300%&	5,230.0	0.3	V, T, A, B, D, F	S	P, R	VIS
RNC90Y5K000%&	5,300.0	0.3	V, T, A, B, D	S	P, R	VIS
RNC90Y5K600%&	5,360.0	0.3	V, T, A, B, D, F	S	P, R	VIS
RNC90Y5K200%&	5,420.0	0.3	V, T, A, B, D	S	P, R	VIS
RNC90Y5K900%&	5,490.0	0.3	V, T, A, B, D, F	S	P, R	VIS
RNC90Y5K600%&	5,560.0	0.3	V, T, A, B, D	S	P, R	VIS
RNC90Y5K200%&	5,620.0	0.3	V, T, A, B, D, F	S	P, R	VIS
RNC90Y5K900%&	5,690.0	0.3	V, T, A, B, D	S	P, R	VIS
RNC90Y5K600%&	5,760.0	0.3	V, T, A, B, D, F	S	P, R	VIS
RNC90Y5K300%&	5,830.0	0.3	V, T, A, B, D	S	P, R	VIS
RNC90Y5K000%&	5,900.0	0.3	V, T, A, B, D, F	S	P, R	VIS
RNC90Y5K700%&	5,970.0	0.3	V, T, A, B, D	S	P, R	VIS

RNC90Y6K400%&	6,040.0	0.3	V, T, A, B, D, F	S	P, R	VIS
RNC90Y6K200%&	6,120.0	0.3	V, T, A, B, D	S	P, R	VIS
RNC90Y6K900%&	6,190.0	0.3	V, T, A, B, D, F	S	P, R	VIS
RNC90Y6K600%&	6,260.0	0.3	V, T, A, B, D	S	P, R	VIS
RNC90Y6K400%&	6,340.0	0.3	V, T, A, B, D, F	S	P, R	VIS
RNC90Y6K200%&	6,420.0	0.3	V, T, A, B, D	S	P, R	VIS
RNC90Y6K900%&	6,490.0	0.3	V, T, A, B, D, F	S	P, R	VIS
RNC90Y6K700%&	6,570.0	0.3	V, T, A, B, D	S	P, R	VIS
RNC90Y6K500%&	6,650.0	0.3	V, T, A, B, D, F	S	P, R	VIS
RNC90Y6K300%&	6,730.0	0.3	V, T, A, B, D	S	P, R	VIS
RNC90Y6K100%&	6,810.0	0.3	V, T, A, B, D, F	S	P, R	VIS
RNC90Y6K000%&	6,900.0	0.3	V, T, A, B, D	S	P, R	VIS
RNC90Y6K800%&	6,980.0	0.3	V, T, A, B, D, F	S	P, R	VIS
RNC90Y7K600%&	7,060.0	0.3	V, T, A, B, D	S	P, R	VIS
RNC90Y7K500%&	7,150.0	0.3	V, T, A, B, D, F	S	P, R	VIS
RNC90Y7K300%&	7,230.0	0.3	V, T, A, B, D	S	P, R	VIS
RNC90Y7K200%&	7,320.0	0.3	V, T, A, B, D, F	S	P, R	VIS
RNC90Y7K100%&	7,410.0	0.3	V, T, A, B, D	S	P, R	VIS
RNC90Y7K000%&	7,500.0	0.3	V, T, A, B, D, F	S	P, R	VIS
RNC90Y7K900%&	7,590.0	0.3	V, T, A, B, D	S	P, R	VIS
RNC90Y7K800%&	7,680.0	0.3	V, T, A, B, D, F	S	P, R	VIS
RNC90Y7K700%&	7,770.0	0.3	V, T, A, B, D	S	P, R	VIS
RNC90Y7K700%&	7,870.0	0.3	V, T, A, B, D, F	S	P, R	VIS
RNC90Y7K600%&	7,960.0	0.3	V, T, A, B, D	S	P, R	VIS
RNC90Y8K600%&	8,060.0	0.3	V, T, A, B, D, F	S	P, R	VIS
RNC90Y8K600%&	8,160.0	0.3	V, T, A, B, D	S	P, R	VIS
RNC90Y8K500%&	8,250.0	0.3	V, T, A, B, D, F	S	P, R	VIS
RNC90Y8K500%&	8,350.0	0.3	V, T, A, B, D	S	P, R	VIS
RNC90Y8K500%&	8,450.0	0.3	V, T, A, B, D, F	S	P, R	VIS
RNC90Y8K600%&	8,560.0	0.3	V, T, A, B, D	S	P, R	VIS
RNC90Y8K600%&	8,660.0	0.3	V, T, A, B, D, F	S	P, R	VIS
RNC90Y8K600%&	8,760.0	0.3	V, T, A, B, D	S	P, R	VIS
RNC90Y8K700%&	8,870.0	0.3	V, T, A, B, D, F	S	P, R	VIS
RNC90Y8K800%&	8,980.0	0.3	V, T, A, B, D	S	P, R	VIS
RNC90Y9K900%&	9,090.0	0.3	V, T, A, B, D, F	S	P, R	VIS
RNC90Y9K000%&	9,200.0	0.3	V, T, A, B, D	S	P, R	VIS
RNC90Y9K100%&	9,310.0	0.3	V, T, A, B, D, F	S	P, R	VIS
RNC90Y9K200%&	9,420.0	0.3	V, T, A, B, D	S	P, R	VIS
RNC90Y9K300%&	9,530.0	0.3	V, T, A, B, D, F	S	P, R	VIS
RNC90Y9K500%&	9,650.0	0.3	V, T, A, B, D	S	P, R	VIS
RNC90Y9K600%&	9,760.0	0.3	V, T, A, B, D, F	S	P, R	VIS
RNC90Y9K800%&	9,880.0	0.3	V, T, A, B, D	S	P, R	VIS
RNC90Y10K000%&	10,000	0.3	V, T, A, B, D, F	S	P, R	VIS
RNC90Y10K100%&	10,100	0.3	V, T, A, B, D	S	P, R	VIS
RNC90Y10K200%&	10,200	0.3	V, T, A, B, D, F	S	P, R	VIS
RNC90Y10K400%&	10,400	0.3	V, T, A, B, D	S	P, R	VIS
RNC90Y10K500%&	10,500	0.3	V, T, A, B, D, F	S	P, R	VIS

RNC90Y10K600%&	10,600	0.3	V, T, A, B, D	S	P, R	VIS
RNC90Y10K700%&	10,700	0.3	V, T, A, B, D, F	S	P, R	VIS
RNC90Y10K900%&	10,900	0.3	V, T, A, B, D	S	P, R	VIS
RNC90Y11K000%&	11,000	0.3	V, T, A, B, D, F	S	P, R	VIS
RNC90Y11K100%&	11,100	0.3	V, T, A, B, D	S	P, R	VIS
RNC90Y11K300%&	11,300	0.3	V, T, A, B, D, F	S	P, R	VIS
RNC90Y11K400%&	11,400	0.3	V, T, A, B, D	S	P, R	VIS
RNC90Y11K500%&	11,500	0.3	V, T, A, B, D, F	S	P, R	VIS
RNC90Y11K700%&	11,700	0.3	V, T, A, B, D	S	P, R	VIS
RNC90Y11K800%&	11,800	0.3	V, T, A, B, D, F	S	P, R	VIS
RNC90Y12K000%&	12,000	0.3	V, T, A, B, D	S	P, R	VIS
RNC90Y12K100%&	12,100	0.3	V, T, A, B, D, F	S	P, R	VIS
RNC90Y12K300%&	12,300	0.3	V, T, A, B, D	S	P, R	VIS
RNC90Y12K400%&	12,400	0.3	V, T, A, B, D, F	S	P, R	VIS
RNC90Y12K600%&	12,600	0.3	V, T, A, B, D	S	P, R	VIS
RNC90Y12K700%&	12,700	0.3	V, T, A, B, D, F	S	P, R	VIS
RNC90Y12K900%&	12,900	0.3	V, T, A, B, D	S	P, R	VIS
RNC90Y13K000%&	13,000	0.3	V, T, A, B, D, F	S	P, R	VIS
RNC90Y13K200%&	13,200	0.3	V, T, A, B, D	S	P, R	VIS
RNC90Y13K300%&	13,300	0.3	V, T, A, B, D, F	S	P, R	VIS
RNC90Y13K500%&	13,500	0.3	V, T, A, B, D	S	P, R	VIS
RNC90Y13K700%&	13,700	0.3	V, T, A, B, D, F	S	P, R	VIS
RNC90Y13K800%&	13,800	0.3	V, T, A, B, D	S	P, R	VIS
RNC90Y14K000%&	14,000	0.3	V, T, A, B, D, F	S	P, R	VIS
RNC90Y14K200%&	14,200	0.3	V, T, A, B, D	S	P, R	VIS
RNC90Y14K300%&	14,300	0.3	V, T, A, B, D, F	S	P, R	VIS
RNC90Y14K500%&	14,500	0.3	V, T, A, B, D	S	P, R	VIS
RNC90Y14K700%&	14,700	0.3	V, T, A, B, D, F	S	P, R	VIS
RNC90Y14K900%&	14,900	0.3	V, T, A, B, D	S	P, R	VIS
RNC90Y15K000%&	15,000	0.3	V, T, A, B, D, F	S	P, R	VIS
RNC90Y15K200%&	15,200	0.3	V, T, A, B, D	S	P, R	VIS
RNC90Y15K400%&	15,400	0.3	V, T, A, B, D, F	S	P, R	VIS
RNC90Y15K600%&	15,600	0.3	V, T, A, B, D	S	P, R	VIS
RNC90Y15K800%&	15,800	0.3	V, T, A, B, D, F	S	P, R	VIS
RNC90Y16K000%&	16,000	0.3	V, T, A, B, D	S	P, R	VIS
RNC90Y16K200%&	16,200	0.3	V, T, A, B, D, F	S	P, R	VIS
RNC90Y16K400%&	16,400	0.3	V, T, A, B, D	S	P, R	VIS
RNC90Y16K500%&	16,500	0.3	V, T, A, B, D, F	S	P, R	VIS
RNC90Y16K700%&	16,700	0.3	V, T, A, B, D	S	P, R	VIS
RNC90Y16K900%&	16,900	0.3	V, T, A, B, D, F	S	P, R	VIS
RNC90Y17K200%&	17,200	0.3	V, T, A, B, D	S	P, R	VIS
RNC90Y17K400%&	17,400	0.3	V, T, A, B, D, F	S	P, R	VIS
RNC90Y17K600%&	17,600	0.3	V, T, A, B, D	S	P, R	VIS
RNC90Y17K800%&	17,800	0.3	V, T, A, B, D, F	S	P, R	VIS
RNC90Y18K000%&	18,000	0.3	V, T, A, B, D	S	P, R	VIS
RNC90Y18K200%&	18,200	0.3	V, T, A, B, D, F	S	P, R	VIS
RNC90Y18K400%&	18,400	0.3	V, T, A, B, D	S	P, R	VIS

RNC90Y18K700%&	18,700	0.3	V, T, A, B, D, F	S	P, R	VIS
RNC90Y18K900%&	18,900	0.3	V, T, A, B, D	S	P, R	VIS
RNC90Y19K100%&	19,100	0.3	V, T, A, B, D, F	S	P, R	VIS
RNC90Y19K300%&	19,300	0.3	V, T, A, B, D	S	P, R	VIS
RNC90Y19K600%&	19,600	0.3	V, T, A, B, D, F	S	P, R	VIS
RNC90Y19K800%&	19,800	0.3	V, T, A, B, D	S	P, R	VIS
RNC90Y20K000%&	20,000	0.3	V, T, A, B, D, F	S	P, R	VIS
RNC90Y20K300%&	20,300	0.3	V, T, A, B, D	S	P, R	VIS
RNC90Y20K500%&	20,500	0.3	V, T, A, B, D, F	S	P, R	VIS
RNC90Y20K800%&	20,800	0.3	V, T, A, B, D	S	P, R	VIS
RNC90Y21K000%&	21,000	0.3	V, T, A, B, D, F	S	P, R	VIS
RNC90Y21K300%&	21,300	0.3	V, T, A, B, D	S	P, R	VIS
RNC90Y21K500%&	21,500	0.3	V, T, A, B, D, F	S	P, R	VIS
RNC90Y21K800%&	21,800	0.3	V, T, A, B, D	S	P, R	VIS
RNC90Y22K100%&	22,100	0.3	V, T, A, B, D, F	S	P, R	VIS
RNC90Y22K300%&	22,300	0.3	V, T, A, B, D	S	P, R	VIS
RNC90Y22K600%&	22,600	0.3	V, T, A, B, D, F	S	P, R	VIS
RNC90Y22K900%&	22,900	0.3	V, T, A, B, D	S	P, R	VIS
RNC90Y23K200%&	23,200	0.3	V, T, A, B, D, F	S	P, R	VIS
RNC90Y23K400%&	23,400	0.3	V, T, A, B, D	S	P, R	VIS
RNC90Y23K700%&	23,700	0.3	V, T, A, B, D, F	S	P, R	VIS
RNC90Y24K000%&	24,000	0.3	V, T, A, B, D	S	P, R	VIS
RNC90Y24K300%&	24,300	0.3	V, T, A, B, D, F	S	P, R	VIS
RNC90Y24K600%&	24,600	0.3	V, T, A, B, D	S	P, R	VIS
RNC90Y24K900%&	24,900	0.3	V, T, A, B, D, F	S	P, R	VIS
RNC90Y25K200%&	25,200	0.3	V, T, A, B, D	S	P, R	VIS
RNC90Y25K500%&	25,500	0.3	V, T, A, B, D, F	S	P, R	VIS
RNC90Y25K800%&	25,800	0.3	V, T, A, B, D	S	P, R	VIS
RNC90Y26K100%&	26,100	0.3	V, T, A, B, D, F	S	P, R	VIS
RNC90Y26K400%&	26,400	0.3	V, T, A, B, D	S	P, R	VIS
RNC90Y26K700%&	26,700	0.3	V, T, A, B, D, F	S	P, R	VIS
RNC90Y27K100%&	27,100	0.3	V, T, A, B, D	S	P, R	VIS
RNC90Y27K400%&	27,400	0.3	V, T, A, B, D, F	S	P, R	VIS
RNC90Y27K700%&	27,700	0.3	V, T, A, B, D	S	P, R	VIS
RNC90Y28K000%&	28,000	0.3	V, T, A, B, D, F	S	P, R	VIS
RNC90Y28K400%&	28,400	0.3	V, T, A, B, D	S	P, R	VIS
RNC90Y28K700%&	28,700	0.3	V, T, A, B, D, F	S	P, R	VIS
RNC90Y29K100%&	29,100	0.3	V, T, A, B, D	S	P, R	VIS
RNC90Y29K400%&	29,400	0.3	V, T, A, B, D, F	S	P, R	VIS
RNC90Y29K800%&	29,800	0.3	V, T, A, B, D	S	P, R	VIS
RNC90Y30K100%&	30,100	0.3	V, T, A, B, D, F	S	P, R	VIS
RNC90Y30K500%&	30,500	0.3	V, T, A, B, D	S	P, R	VIS
RNC90Y30K900%&	30,900	0.3	V, T, A, B, D, F	S	P, R	VIS
RNC90Y31K200%&	31,200	0.3	V, T, A, B, D	S	P, R	VIS
RNC90Y31K600%&	31,600	0.3	V, T, A, B, D, F	S	P, R	VIS
RNC90Y32K000%&	32,000	0.3	V, T, A, B, D	S	P, R	VIS
RNC90Y32K400%&	32,400	0.3	V, T, A, B, D, F	S	P, R	VIS

RNC90Y32K800%&	32,800	0.3	V, T, A, B, D	S	P, R	VIS
RNC90Y33K200%&	33,200	0.3	V, T, A, B, D, F	S	P, R	VIS
RNC90Y33K600%&	33,600	0.3	V, T, A, B, D	S	P, R	VIS
RNC90Y34K000%&	34,000	0.3	V, T, A, B, D, F	S	P, R	VIS
RNC90Y34K400%&	34,400	0.3	V, T, A, B, D	S	P, R	VIS
RNC90Y34K800%&	34,800	0.3	V, T, A, B, D, F	S	P, R	VIS
RNC90Y35K200%&	35,200	0.3	V, T, A, B, D	S	P, R	VIS
RNC90Y35K700%&	35,700	0.3	V, T, A, B, D, F	S	P, R	VIS
RNC90Y36K100%&	36,100	0.3	V, T, A, B, D	S	P, R	VIS
RNC90Y36K500%&	36,500	0.3	V, T, A, B, D, F	S	P, R	VIS
RNC90Y37K000%&	37,000	0.3	V, T, A, B, D	S	P, R	VIS
RNC90Y37K400%&	37,400	0.3	V, T, A, B, D, F	S	P, R	VIS
RNC90Y37K900%&	37,900	0.3	V, T, A, B, D	S	P, R	VIS
RNC90Y38K300%&	38,300	0.3	V, T, A, B, D, F	S	P, R	VIS
RNC90Y38K800%&	38,800	0.3	V, T, A, B, D	S	P, R	VIS
RNC90Y39K200%&	39,200	0.3	V, T, A, B, D, F	S	P, R	VIS
RNC90Y39K700%&	39,700	0.3	V, T, A, B, D	S	P, R	VIS
RNC90Y40K200%&	40,200	0.3	V, T, A, B, D, F	S	P, R	VIS
RNC90Y40K700%&	40,700	0.3	V, T, A, B, D	S	P, R	VIS
RNC90Y41K200%&	41,200	0.3	V, T, A, B, D, F	S	P, R	VIS
RNC90Y41K700%&	41,700	0.3	V, T, A, B, D	S	P, R	VIS
RNC90Y42K200%&	42,200	0.3	V, T, A, B, D, F	S	P, R	VIS
RNC90Y42K700%&	42,700	0.3	V, T, A, B, D	S	P, R	VIS
RNC90Y43K200%&	43,200	0.3	V, T, A, B, D, F	S	P, R	VIS
RNC90Y43K700%&	43,700	0.3	V, T, A, B, D	S	P, R	VIS
RNC90Y44K200%&	44,200	0.3	V, T, A, B, D, F	S	P, R	VIS
RNC90Y44K800%&	44,800	0.3	V, T, A, B, D	S	P, R	VIS
RNC90Y45K300%&	45,300	0.3	V, T, A, B, D, F	S	P, R	VIS
RNC90Y45K900%&	45,900	0.3	V, T, A, B, D	S	P, R	VIS
RNC90Y46K400%&	46,400	0.3	V, T, A, B, D, F	S	P, R	VIS
RNC90Y47K000%&	47,000	0.3	V, T, A, B, D	S	P, R	VIS
RNC90Y47K500%&	47,500	0.3	V, T, A, B, D, F	S	P, R	VIS
RNC90Y48K100%&	48,100	0.3	V, T, A, B, D	S	P, R	VIS
RNC90Y48K700%&	48,700	0.3	V, T, A, B, D, F	S	P, R	VIS
RNC90Y49K300%&	49,300	0.3	V, T, A, B, D	S	P, R	VIS
RNC90Y49K900%&	49,900	0.3	V, T, A, B, D, F	S	P, R	VIS
RNC90Y50K500%&	50,500	0.3	V, T, A, B, D	S	P, R	VIS
RNC90Y51K100%&	51,100	0.3	V, T, A, B, D, F	S	P, R	VIS
RNC90Y51K700%&	51,700	0.3	V, T, A, B, D	S	P, R	VIS
RNC90Y52K300%&	52,300	0.3	V, T, A, B, D, F	S	P, R	VIS
RNC90Y53K000%&	53,000	0.3	V, T, A, B, D	S	P, R	VIS
RNC90Y53K600%&	53,600	0.3	V, T, A, B, D, F	S	P, R	VIS
RNC90Y54K200%&	54,200	0.3	V, T, A, B, D	S	P, R	VIS
RNC90Y54K900%&	54,900	0.3	V, T, A, B, D, F	S	P, R	VIS
RNC90Y55K600%&	55,600	0.3	V, T, A, B, D	S	P, R	VIS
RNC90Y56K200%&	56,200	0.3	V, T, A, B, D, F	S	P, R	VIS
RNC90Y56K900%&	56,900	0.3	V, T, A, B, D	S	P, R	VIS

RNC90Y57K600%&	57,600	0.3	V, T, A, B, D, F	S	P, R	VIS
RNC90Y58K300%&	58,300	0.3	V, T, A, B, D	S	P, R	VIS
RNC90Y59K000%&	59,000	0.3	V, T, A, B, D, F	S	P, R	VIS
RNC90Y59K700%&	59,700	0.3	V, T, A, B, D	S	P, R	VIS
RNC90Y60K400%&	60,400	0.3	V, T, A, B, D, F	S	P, R	VIS
RNC90Y61K200%&	61,200	0.3	V, T, A, B, D	S	P, R	VIS
RNC90Y61K900%&	61,900	0.3	V, T, A, B, D, F	S	P, R	VIS
RNC90Y62K600%&	62,600	0.3	V, T, A, B, D	S	P, R	VIS
RNC90Y63K400%&	63,400	0.3	V, T, A, B, D, F	S	P, R	VIS
RNC90Y64K200%&	64,200	0.3	V, T, A, B, D	S	P, R	VIS
RNC90Y64K900%&	64,900	0.3	V, T, A, B, D, F	S	P, R	VIS
RNC90Y65K700%&	65,700	0.3	V, T, A, B, D	S	P, R	VIS
RNC90Y66K500%&	66,500	0.3	V, T, A, B, D, F	S	P, R	VIS
RNC90Y67K300%&	67,300	0.3	V, T, A, B, D	S	P, R	VIS
RNC90Y68K100%&	68,100	0.3	V, T, A, B, D, F	S	P, R	VIS
RNC90Y69K000%&	69,000	0.3	V, T, A, B, D	S	P, R	VIS
RNC90Y69K800%&	69,800	0.3	V, T, A, B, D, F	S	P, R	VIS
RNC90Y70K600%&	70,600	0.3	V, T, A, B, D	S	P, R	VIS
RNC90Y71K500%&	71,500	0.3	V, T, A, B, D, F	S	P, R	VIS
RNC90Y72K300%&	72,300	0.3	V, T, A, B, D	S	P, R	VIS
RNC90Y73K200%&	73,200	0.3	V, T, A, B, D, F	S	P, R	VIS
RNC90Y74K100%&	74,100	0.3	V, T, A, B, D	S	P, R	VIS
RNC90Y75K000%&	75,000	0.3	V, T, A, B, D, F	S	P, R	VIS
RNC90Y75K900%&	75,900	0.3	V, T, A, B, D	S	P, R	VIS
RNC90Y76K800%&	76,800	0.3	V, T, A, B, D, F	S	P, R	VIS
RNC90Y77K700%&	77,700	0.3	V, T, A, B, D	S	P, R	VIS
RNC90Y78K700%&	78,700	0.3	V, T, A, B, D, F	S	P, R	VIS
RNC90Y79K600%&	79,600	0.3	V, T, A, B, D	S	P, R	VIS
RNC90Y80K600%&	80,600	0.3	V, T, A, B, D, F	S	P, R	VIS
RNC90Y81K600%&	81,600	0.3	V, T, A, B, D	S	P, R	VIS
RNC90Y82K500%&	82,500	0.3	V, T, A, B, D, F	S	P, R	VIS
RNC90Y83K500%&	83,500	0.3	V, T, A, B, D	S	P, R	VIS
RNC90Y84K500%&	84,500	0.3	V, T, A, B, D, F	S	P, R	VIS
RNC90Y85K600%&	85,600	0.3	V, T, A, B, D	S	P, R	VIS
RNC90Y86K600%&	86,600	0.3	V, T, A, B, D, F	S	P, R	VIS
RNC90Y87K600%&	87,600	0.3	V, T, A, B, D	S	P, R	VIS
RNC90Y88K700%&	88,700	0.3	V, T, A, B, D, F	S	P, R	VIS
RNC90Y89K800%&	89,800	0.3	V, T, A, B, D	S	P, R	VIS
RNC90Y90K900%&	90,900	0.3	V, T, A, B, D, F	S	P, R	VIS
RNC90Y92K000%&	92,000	0.3	V, T, A, B, D	S	P, R	VIS
RNC90Y93K100%&	93,100	0.3	V, T, A, B, D, F	S	P, R	VIS
RNC90Y94K200%&	94,200	0.3	V, T, A, B, D	S	P, R	VIS
RNC90Y95K300%&	95,300	0.3	V, T, A, B, D, F	S	P, R	VIS
RNC90Y96K500%&	96,500	0.3	V, T, A, B, D	S	P, R	VIS
RNC90Y97K600%&	97,600	0.3	V, T, A, B, D, F	S	P, R	VIS
RNC90Y98K800%&	98,800	0.3	V, T, A, B, D	S	P, R	VIS
RNC90Y100K00%&	100,000	0.3	V, T, A, B, D, F	S	P, R	VIS

RNC90Y101K00%&	101,000	0.3	V, T, A, B, D	S	P, R	-
RNC90Y102K00%&	102,000	0.3	V, T, A, B, D, F	S	P, R	-
RNC90Y104K00%&	104,000	0.3	V, T, A, B, D	S	P, R	-
RNC90Y105K00%&	105,000	0.3	V, T, A, B, D, F	S	P, R	-
RNC90Y106K00%&	106,000	0.3	V, T, A, B, D	S	P, R	-
RNC90Y107K00%&	107,000	0.3	V, T, A, B, D, F	S	P, R	-
RNC90Y109K00%&	109,000	0.3	V, T, A, B, D	S	P, R	-
RNC90Y110K00%&	110,000	0.3	V, T, A, B, D, F	S	P, R	-
RNC90Y111K00%&	111,000	0.3	V, T, A, B, D	S	P, R	-
RNC90Y113K00%&	113,000	0.3	V, T, A, B, D, F	S	P, R	-
RNC90Y114K00%&	114,000	0.3	V, T, A, B, D	S	P, R	-
RNC90Y115K00%&	115,000	0.3	V, T, A, B, D, F	S	P, R	-
RNC90Y117K00%&	117,000	0.3	V, T, A, B, D	S	P, R	-
RNC90Y118K00%&	118,000	0.3	V, T, A, B, D, F	S	P, R	-
RNC90Y120K00%&	120,000	0.3	V, T, A, B, D	S	P, R	-
RNC90Y121K00%&	121,000	0.3	V, T, A, B, D, F	S	P, R	-
RNC90Y123K00%&	123,000	0.3	V, T, A, B, D	S	P, R	-
RNC90Y124K00%&	124,000	0.3	V, T, A, B, D, F	S	P, R	-
RNC90Y126K00%&	126,000	0.3	V, T, A, B, D	S	P, R	-
RNC90Y127K00%&	127,000	0.3	V, T, A, B, D, F	S	P, R	-
RNC90Y129K00%&	129,000	0.3	V, T, A, B, D	S	P, R	-
RNC90Y130K00%&	130,000	0.3	V, T, A, B, D, F	S	P, R	-
RNC90Y132K00%&	132,000	0.3	V, T, A, B, D	S	P, R	-
RNC90Y133K00%&	133,000	0.3	V, T, A, B, D, F	S	P, R	-
RNC90Y135K00%&	135,000	0.3	V, T, A, B, D	S	P, R	-
RNC90Y137K00%&	137,000	0.3	V, T, A, B, D, F	S	P, R	-
RNC90Y138K00%&	138,000	0.3	V, T, A, B, D	S	P, R	-
RNC90Y140K00%&	140,000	0.3	V, T, A, B, D, F	S	P, R	-
RNC90Y142K00%&	142,000	0.3	V, T, A, B, D	S	P, R	-
RNC90Y143K00%&	143,000	0.3	V, T, A, B, D, F	S	P, R	-
RNC90Y145K00%&	145,000	0.3	V, T, A, B, D	S	P, R	-
RNC90Y147K00%&	147,000	0.3	V, T, A, B, D, F	S	P, R	-
RNC90Y149K00%&	149,000	0.3	V, T, A, B, D	S	P, R	-
RNC90Y150K00%&	150,000	0.3	V, T, A, B, D, F	S	P, R	-
RNC90Y152K00%&	152,000	0.3	V, T, A, B, D	S	P, R	-
RNC90Y154K00%&	154,000	0.3	V, T, A, B, D, F	S	P, R	-
RNC90Y156K00%&	156,000	0.3	V, T, A, B, D	S	P, R	-
RNC90Y158K00%&	158,000	0.3	V, T, A, B, D, F	S	P, R	-
RNC90Y160K00%&	160,000	0.3	V, T, A, B, D	S	P, R	-
RNC90Y162K00%&	162,000	0.3	V, T, A, B, D, F	S	P, R	-
RNC90Y164K00%&	164,000	0.3	V, T, A, B, D	S	P, R	-
RNC90Y165K00%&	165,000	0.3	V, T, A, B, D, F	S	P, R	-
RNC90Y167K00%&	167,000	0.3	V, T, A, B, D	S	P, R	-
RNC90Y169K00%&	169,000	0.3	V, T, A, B, D, F	S	P, R	-
RNC90Y172K00%&	172,000	0.3	V, T, A, B, D	S	P, R	-
RNC90Y174K00%&	174,000	0.3	V, T, A, B, D, F	S	P, R	-
RNC90Y176K00%&	176,000	0.3	V, T, A, B, D	S	P, R	-

RNC90Y178K00%&	178,000	0.3	V, T, A, B, D, F	S	P, R	-
RNC90Y180K00%&	180,000	0.3	V, T, A, B, D	S	P, R	-
RNC90Y182K00%&	182,000	0.3	V, T, A, B, D, F	S	P, R	-
RNC90Y184K00%&	184,000	0.3	V, T, A, B, D	S	P, R	-
RNC90Y187K00%&	187,000	0.3	V, T, A, B, D, F	S	P, R	-
RNC90Y189K00%&	189,000	0.3	V, T, A, B, D	S	P, R	-
RNC90Y191K00%&	191,000	0.3	V, T, A, B, D, F	S	P, R	-
RNC90Y193K00%&	193,000	0.3	V, T, A, B, D	S	P, R	-
RNC90Y196K00%&	196,000	0.3	V, T, A, B, D, F	S	P, R	-
RNC90Y198K00%&	198,000	0.3	V, T, A, B, D	S	P, R	-
RNC90Y200K00%&	200,000	0.3	V, T, A, B, D, F	S	P, R	-

RNC90Y RESISTORS DECADE BREAKDOWN

Click on the link below to see the associated parts selection listing:

Resistance Range
4.9900 Ohms through 9.8800 Ohms
10.000 Ohms through 98.800 Ohms
100.00 Ohms through 988.00 Ohms
1,000.0 Ohms through 9,880.0 Ohms
10,000 Ohms through 98,800 Ohms
100,000 Ohms through 200,000 Ohms

Physical Dimensions Table

Style RNC90Y

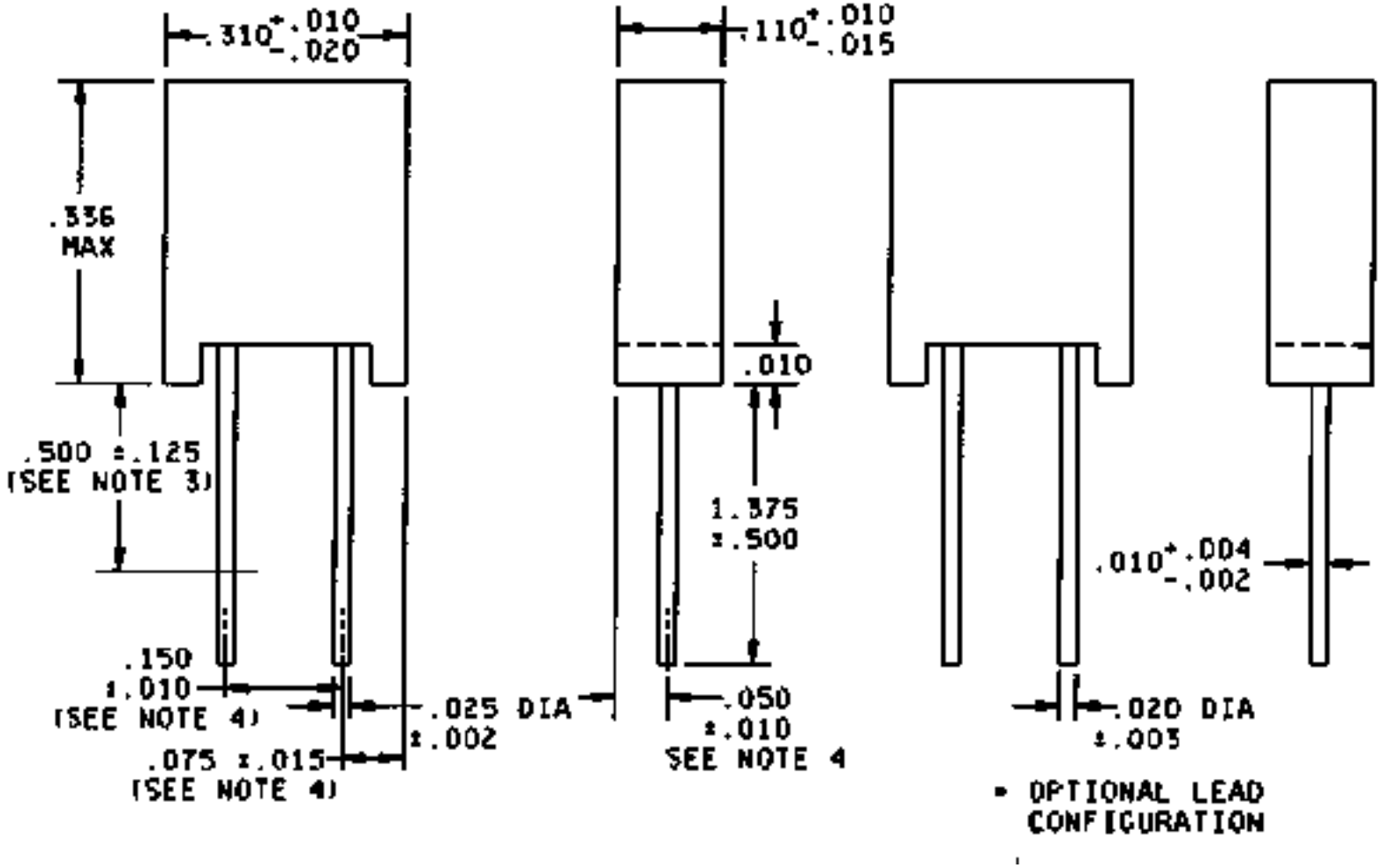

NOTES:

1. Dimensions are in inches.
2. Metric equivalents are given for general information only.
3. Resistance measurement point.
4. The lead measurements shall be made at the point of emergence from the body.
5. Style of standoffs is optional.

	Resistance	Power	Resistance	Level 1	Level 2	
Part Number	Value (Ohms)	Rating (W)	Tolerance (%)	(FRL) (&)	(FRL) (&)	Manufacturer
RNC90Y4R9900%&	4.9900	0.3	V, T, A, B, D, F	-	P, R	VIS
RNC90Y5R0500%&	5.0500	0.3	V, T, A, B, D	-	P, R	VIS
RNC90Y5R1100%&	5.1100	0.3	V, T, A, B, D, F	-	P, R	VIS
RNC90Y5R1700%&	5.1700	0.3	V, T, A, B, D	-	P, R	VIS
RNC90Y5R2300%&	5.2300	0.3	V, T, A, B, D, F	-	P, R	VIS
RNC90Y5R3000%&	5.3000	0.3	V, T, A, B, D	-	P, R	VIS
RNC90Y5R3600%&	5.3600	0.3	V, T, A, B, D, F	-	P, R	VIS
RNC90Y5R4200%&	5.4200	0.3	V, T, A, B, D	-	P, R	VIS
RNC90Y5R4900%&	5.4900	0.3	V, T, A, B, D, F	-	P, R	VIS
RNC90Y5R5600%&	5.5600	0.3	V, T, A, B, D	-	P, R	VIS
RNC90Y5R6200%&	5.6200	0.3	V, T, A, B, D, F	-	P, R	VIS
RNC90Y5R6900%&	5.6900	0.3	V, T, A, B, D	-	P, R	VIS
RNC90Y5R7600%&	5.7600	0.3	V, T, A, B, D, F	-	P, R	VIS
RNC90Y5R8300%&	5.8300	0.3	V, T, A, B, D	-	P, R	VIS
	Resistance	Power	Resistance	Level 1	Level 2	
Part Number	Value (Ohms)	Rating (W)	Tolerance (%)	(FRL) (&)	(FRL) (&)	Manufacturer
RNC90Y5R9000%&	5.9000	0.3	V, T, A, B, D, F	-	P, R	VIS
RNC90Y5R9700%&	5.9700	0.3	V, T, A, B, D	-	P, R	VIS
RNC90Y6R0400%&	6.0400	0.3	V, T, A, B, D, F	-	P, R	VIS
RNC90Y6R1200%&	6.1200	0.3	V, T, A, B, D	-	P, R	VIS
RNC90Y6R1900%&	6.1900	0.3	V, T, A, B, D, F	-	P, R	VIS
RNC90Y6R2600%&	6.2600	0.3	V, T, A, B, D	-	P, R	VIS
RNC90Y6R3400%&	6.3400	0.3	V, T, A, B, D, F	-	P, R	VIS
RNC90Y6R4200%&	6.4200	0.3	V, T, A, B, D	-	P, R	VIS
RNC90Y6R4900%&	6.4900	0.3	V, T, A, B, D, F	-	P, R	VIS
RNC90Y6R5700%&	6.5700	0.3	V, T, A, B, D	-	P, R	VIS
RNC90Y6R6500%&	6.6500	0.3	V, T, A, B, D, F	-	P, R	VIS
RNC90Y6R7300%&	6.7300	0.3	V, T, A, B, D	-	P, R	VIS
RNC90Y6R8100%&	6.8100	0.3	V, T, A, B, D, F	-	P, R	VIS
RNC90Y6R9000%&	6.9000	0.3	V, T, A, B, D	-	P, R	VIS
RNC90Y6R9800%&	6.9800	0.3	V, T, A, B, D, F	-	P, R	VIS
RNC90Y7R0600%&	7.0600	0.3	V, T, A, B, D	-	P, R	VIS
RNC90Y7R1500%&	7.1500	0.3	V, T, A, B, D, F	-	P, R	VIS
RNC90Y7R2300%&	7.2300	0.3	V, T, A, B, D	-	P, R	VIS
	Resistance	Power	Resistance	Level 1	Level 2	
Part Number	Value (Ohms)	Rating (W)	Tolerance (%)	(FRL) (&)	(FRL) (&)	Manufacturer
RNC90Y7R3200%&	7.3200	0.3	V, T, A, B, D, F	-	P, R	VIS
RNC90Y7R4100%&	7.4100	0.3	V, T, A, B, D	-	P, R	VIS
RNC90Y7R5000%&	7.5000	0.3	V, T, A, B, D, F	-	P, R	VIS
RNC90Y7R5900%&	7.5900	0.3	V, T, A, B, D	-	P, R	VIS
RNC90Y7R6800%&	7.6800	0.3	V, T, A, B, D, F	-	P, R	VIS
RNC90Y7R7700%&	7.7700	0.3	V, T, A, B, D	-	P, R	VIS

RNC90Y7R8700%&	7.8700	0.3	V, T, A, B, D, F	-	P, R	VIS
RNC90Y7R9600%&	7.9600	0.3	V, T, A, B, D	-	P, R	VIS
RNC90Y8R0600%&	8.0600	0.3	V, T, A, B, D, F	-	P, R	VIS
RNC90Y8R1600%&	8.1600	0.3	V, T, A, B, D	-	P, R	VIS
RNC90Y8R2500%&	8.2500	0.3	V, T, A, B, D, F	-	P, R	VIS
RNC90Y8R3500%&	8.3500	0.3	V, T, A, B, D	-	P, R	VIS
RNC90Y8R4500%&	8.4500	0.3	V, T, A, B, D, F	-	P, R	VIS
RNC90Y8R5600%&	8.5600	0.3	V, T, A, B, D	-	P, R	VIS
RNC90Y8R6600%&	8.6600	0.3	V, T, A, B, D, F	-	P, R	VIS
RNC90Y8R7600%&	8.7600	0.3	V, T, A, B, D	-	P, R	VIS
RNC90Y8R8700%&	8.8700	0.3	V, T, A, B, D, F	-	P, R	VIS
RNC90Y8R9800%&	8.9800	0.3	V, T, A, B, D	-	P, R	VIS
	Resistance	Power	Resistance	Level 1	Level 2	
Part Number	Value (Ohms)	Rating (W)	Tolerance (%)	(FRL) (&)	(FRL) (&)	Manufacturer
RNC90Y9R0900%&	9.0900	0.3	V, T, A, B, D, F	-	P, R	VIS
RNC90Y9R2000%&	9.2000	0.3	V, T, A, B, D	-	P, R	VIS
RNC90Y9R3100%&	9.3100	0.3	V, T, A, B, D, F	-	P, R	VIS
RNC90Y9R4200%&	9.4200	0.3	V, T, A, B, D	-	P, R	VIS
RNC90Y9R5300%&	9.5300	0.3	V, T, A, B, D, F	-	P, R	VIS
RNC90Y9R6500%&	9.6500	0.3	V, T, A, B, D	-	P, R	VIS
RNC90Y9R7600%&	9.7600	0.3	V, T, A, B, D, F	-	P, R	VIS
RNC90Y9R8800%&	9.8800	0.3	V, T, A, B, D	-	P, R	VIS

RNC90Y Film Resistors: 10.000 Ohms through 98.800 Ohms

	Resistance	Power	Resistance	Level 1	Level 2	
Part Number	Value (Ohms)	Rating (W)	Tolerance (%)	(FRL) (&)	(FRL) (&)	Manufacturer
RNC90Y10R000%&	10.000	0.3	V, T, A, B, D, F	-	P, R	VIS
RNC90Y10R100%&	10.100	0.3	V, T, A, B, D	-	P, R	VIS
RNC90Y10R200%&	10.200	0.3	V, T, A, B, D, F	-	P, R	VIS
RNC90Y10R400%&	10.400	0.3	V, T, A, B, D	-	P, R	VIS
RNC90Y10R500%&	10.500	0.3	V, T, A, B, D, F	-	P, R	VIS
RNC90Y10R600%&	10.600	0.3	V, T, A, B, D	-	P, R	VIS
RNC90Y10R700%&	10.700	0.3	V, T, A, B, D, F	-	P, R	VIS
RNC90Y10R900%&	10.900	0.3	V, T, A, B, D	-	P, R	VIS
RNC90Y11R000%&	11.000	0.3	V, T, A, B, D, F	-	P, R	VIS
RNC90Y11R100%&	11.100	0.3	V, T, A, B, D	-	P, R	VIS
RNC90Y11R300%&	11.300	0.3	V, T, A, B, D, F	-	P, R	VIS
RNC90Y11R400%&	11.400	0.3	V, T, A, B, D	-	P, R	VIS
RNC90Y11R500%&	11.500	0.3	V, T, A, B, D, F	-	P, R	VIS
RNC90Y11R700%&	11.700	0.3	V, T, A, B, D	-	P, R	VIS
	Resistance	Power	Resistance	Level 1	Level 2	
Part Number	Value (Ohms)	Rating (W)	Tolerance (%)	(FRL) (&)	(FRL) (&)	Manufacturer
RNC90Y11R800%&	11.800	0.3	V, T, A, B, D, F	-	P, R	VIS
RNC90Y12R000%&	12.000	0.3	V, T, A, B, D	-	P, R	VIS

RNC90Y12R100%&	12.100	0.3	V, T, A, B, D, F	-	P, R	VIS
RNC90Y12R300%&	12.300	0.3	V, T, A, B, D	-	P, R	VIS
RNC90Y12R400%&	12.400	0.3	V, T, A, B, D, F	-	P, R	VIS
RNC90Y12R600%&	12.600	0.3	V, T, A, B, D	-	P, R	VIS
RNC90Y12R700%&	12.700	0.3	V, T, A, B, D, F	-	P, R	VIS
RNC90Y12R900%&	12.900	0.3	V, T, A, B, D	-	P, R	VIS
RNC90Y13R000%&	13.000	0.3	V, T, A, B, D, F	-	P, R	VIS
RNC90Y13R200%&	13.200	0.3	V, T, A, B, D	-	P, R	VIS
RNC90Y13R300%&	13.300	0.3	V, T, A, B, D, F	-	P, R	VIS
RNC90Y13R500%&	13.500	0.3	V, T, A, B, D	-	P, R	VIS
RNC90Y13R700%&	13.700	0.3	V, T, A, B, D, F	-	P, R	VIS
RNC90Y13R800%&	13.800	0.3	V, T, A, B, D	-	P, R	VIS
RNC90Y14R000%&	14.000	0.3	V, T, A, B, D, F	-	P, R	VIS
RNC90Y14R200%&	14.200	0.3	V, T, A, B, D	-	P, R	VIS
RNC90Y14R300%&	14.300	0.3	V, T, A, B, D, F	-	P, R	VIS
RNC90Y14R500%&	14.500	0.3	V, T, A, B, D	-	P, R	VIS
	Resistance	Power	Resistance	Level 1	Level 2	
Part Number	Value (Ohms)	Rating (W)	Tolerance (%)	(FRL) (&)	(FRL) (&)	Manufacturer
RNC90Y14R700%&	14.700	0.3	V, T, A, B, D, F	-	P, R	VIS
RNC90Y14R900%&	14.900	0.3	V, T, A, B, D	-	P, R	VIS
RNC90Y15R000%&	15.000	0.3	V, T, A, B, D, F	-	P, R	VIS
RNC90Y15R200%&	15.200	0.3	V, T, A, B, D	-	P, R	VIS
RNC90Y15R400%&	15.400	0.3	V, T, A, B, D, F	-	P, R	VIS
RNC90Y15R600%&	15.600	0.3	V, T, A, B, D	-	P, R	VIS
RNC90Y15R800%&	15.800	0.3	V, T, A, B, D, F	-	P, R	VIS
RNC90Y16R000%&	16.000	0.3	V, T, A, B, D	-	P, R	VIS
RNC90Y16R200%&	16.200	0.3	V, T, A, B, D, F	-	P, R	VIS
RNC90Y16R400%&	16.400	0.3	V, T, A, B, D	-	P, R	VIS
RNC90Y16R500%&	16.500	0.3	V, T, A, B, D, F	-	P, R	VIS
RNC90Y16R700%&	16.700	0.3	V, T, A, B, D	-	P, R	VIS
RNC90Y16R900%&	16.900	0.3	V, T, A, B, D, F	-	P, R	VIS
RNC90Y17R200%&	17.200	0.3	V, T, A, B, D	-	P, R	VIS
RNC90Y17R400%&	17.400	0.3	V, T, A, B, D, F	-	P, R	VIS
RNC90Y17R600%&	17.600	0.3	V, T, A, B, D	-	P, R	VIS
RNC90Y17R800%&	17.800	0.3	V, T, A, B, D, F	-	P, R	VIS
RNC90Y18R000%&	18.000	0.3	V, T, A, B, D	-	P, R	VIS
	Resistance	Power	Resistance	Level 1	Level 2	
Part Number	Value (Ohms)	Rating (W)	Tolerance (%)	(FRL) (&)	(FRL) (&)	Manufacturer
RNC90Y18R200%&	18.200	0.3	V, T, A, B, D, F	-	P, R	VIS
RNC90Y18R400%&	18.400	0.3	V, T, A, B, D	-	P, R	VIS
RNC90Y18R700%&	18.700	0.3	V, T, A, B, D, F	-	P, R	VIS
RNC90Y18R900%&	18.900	0.3	V, T, A, B, D	-	P, R	VIS
RNC90Y19R100%&	19.100	0.3	V, T, A, B, D, F	-	P, R	VIS
RNC90Y19R300%&	19.300	0.3	V, T, A, B, D	-	P, R	VIS
RNC90Y19R600%&	19.600	0.3	V, T, A, B, D, F	-	P, R	VIS
RNC90Y19R800%&	19.800	0.3	V, T, A, B, D	-	P, R	VIS
RNC90Y20R000%&	20.000	0.3	V, T, A, B, D, F	-	P, R	VIS

RNC90Y20R300%&	20.300	0.3	V, T, A, B, D	-	P, R	VIS
RNC90Y20R500%&	20.500	0.3	V, T, A, B, D, F	-	P, R	VIS
RNC90Y20R800%&	20.800	0.3	V, T, A, B, D	-	P, R	VIS
RNC90Y21R000%&	21.000	0.3	V, T, A, B, D, F	-	P, R	VIS
RNC90Y21R300%&	21.300	0.3	V, T, A, B, D	-	P, R	VIS
RNC90Y21R500%&	21.500	0.3	V, T, A, B, D, F	-	P, R	VIS
RNC90Y21R800%&	21.800	0.3	V, T, A, B, D	-	P, R	VIS
RNC90Y22R100%&	22.100	0.3	V, T, A, B, D, F	-	P, R	VIS
RNC90Y22R300%&	22.300	0.3	V, T, A, B, D	-	P, R	VIS
	Resistance	Power	Resistance	Level 1	Level 2	
Part Number	Value (Ohms)	Rating (W)	Tolerance (%)	(FRL) (&)	(FRL) (&)	Manufacturer
RNC90Y22R600%&	22.600	0.3	V, T, A, B, D, F	-	P, R	VIS
RNC90Y22R900%&	22.900	0.3	V, T, A, B, D	-	P, R	VIS
RNC90Y23R200%&	23.200	0.3	V, T, A, B, D, F	-	P, R	VIS
RNC90Y23R400%&	23.400	0.3	V, T, A, B, D	-	P, R	VIS
RNC90Y23R700%&	23.700	0.3	V, T, A, B, D, F	-	P, R	VIS
RNC90Y24R000%&	24.000	0.3	V, T, A, B, D	-	P, R	VIS
RNC90Y24R300%&	24.300	0.3	V, T, A, B, D, F	-	P, R	VIS
RNC90Y24R600%&	24.600	0.3	V, T, A, B, D	-	P, R	VIS
RNC90Y24R900%&	24.900	0.3	V, T, A, B, D, F	-	P, R	VIS
RNC90Y25R200%&	25.200	0.3	V, T, A, B, D	-	P, R	VIS
RNC90Y25R500%&	25.500	0.3	V, T, A, B, D, F	-	P, R	VIS
RNC90Y25R800%&	25.800	0.3	V, T, A, B, D	-	P, R	VIS
RNC90Y26R100%&	26.100	0.3	V, T, A, B, D, F	-	P, R	VIS
RNC90Y26R400%&	26.400	0.3	V, T, A, B, D	-	P, R	VIS
RNC90Y26R700%&	26.700	0.3	V, T, A, B, D, F	-	P, R	VIS
RNC90Y27R100%&	27.100	0.3	V, T, A, B, D	-	P, R	VIS
RNC90Y27R400%&	27.400	0.3	V, T, A, B, D, F	-	P, R	VIS
RNC90Y27R700%&	27.700	0.3	V, T, A, B, D	-	P, R	VIS
	Resistance	Power	Resistance	Level 1	Level 2	
Part Number	Value (Ohms)	Rating (W)	Tolerance (%)	(FRL) (&)	(FRL) (&)	Manufacturer
RNC90Y28R000%&	28.000	0.3	V, T, A, B, D, F	-	P, R	VIS
RNC90Y28R400%&	28.400	0.3	V, T, A, B, D	-	P, R	VIS
RNC90Y28R700%&	28.700	0.3	V, T, A, B, D, F	-	P, R	VIS
RNC90Y29R100%&	29.100	0.3	V, T, A, B, D	-	P, R	VIS
RNC90Y29R400%&	29.400	0.3	V, T, A, B, D, F	-	P, R	VIS
RNC90Y29R800%&	29.800	0.3	V, T, A, B, D	-	P, R	VIS
RNC90Y30R100%&	30.100	0.3	V, T, A, B, D, F	-	P, R	VIS
RNC90Y30R500%&	30.500	0.3	V, T, A, B, D	-	P, R	VIS
RNC90Y30R900%&	30.900	0.3	V, T, A, B, D, F	-	P, R	VIS
RNC90Y31R200%&	31.200	0.3	V, T, A, B, D	-	P, R	VIS
RNC90Y31R600%&	31.600	0.3	V, T, A, B, D, F	-	P, R	VIS
RNC90Y32R000%&	32.000	0.3	V, T, A, B, D	-	P, R	VIS
RNC90Y32R400%&	32.400	0.3	V, T, A, B, D, F	-	P, R	VIS
RNC90Y32R800%&	32.800	0.3	V, T, A, B, D	-	P, R	VIS
RNC90Y33R200%&	33.200	0.3	V, T, A, B, D, F	-	P, R	VIS
RNC90Y33R600%&	33.600	0.3	V, T, A, B, D	-	P, R	VIS

RNC90Y34R000%&	34.000	0.3	V, T, A, B, D, F	-	P, R	VIS
RNC90Y34R400%&	34.400	0.3	V, T, A, B, D	-	P, R	VIS
	Resistance	Power	Resistance	Level 1	Level 2	
Part Number	Value (Ohms)	Rating (W)	Tolerance (%)	(FRL) (&)	(FRL) (&)	Manufacturer
RNC90Y34R800%&	34.800	0.3	V, T, A, B, D, F	-	P, R	VIS
RNC90Y35R200%&	35.200	0.3	V, T, A, B, D	-	P, R	VIS
RNC90Y35R700%&	35.700	0.3	V, T, A, B, D, F	-	P, R	VIS
RNC90Y36R100%&	36.100	0.3	V, T, A, B, D	-	P, R	VIS
RNC90Y36R500%&	36.500	0.3	V, T, A, B, D, F	-	P, R	VIS
RNC90Y37R000%&	37.000	0.3	V, T, A, B, D	-	P, R	VIS
RNC90Y37R400%&	37.400	0.3	V, T, A, B, D, F	-	P, R	VIS
RNC90Y37R900%&	37.900	0.3	V, T, A, B, D	-	P, R	VIS
RNC90Y38R300%&	38.300	0.3	V, T, A, B, D, F	-	P, R	VIS
RNC90Y38R800%&	38.800	0.3	V, T, A, B, D	-	P, R	VIS
RNC90Y39R200%&	39.200	0.3	V, T, A, B, D, F	-	P, R	VIS
RNC90Y39R700%&	39.700	0.3	V, T, A, B, D	-	P, R	VIS
RNC90Y40R200%&	40.200	0.3	V, T, A, B, D, F	-	P, R	VIS
RNC90Y40R700%&	40.700	0.3	V, T, A, B, D	-	P, R	VIS
RNC90Y41R200%&	41.200	0.3	V, T, A, B, D, F	-	P, R	VIS
RNC90Y41R700%&	41.700	0.3	V, T, A, B, D	-	P, R	VIS
RNC90Y42R200%&	42.200	0.3	V, T, A, B, D, F	-	P, R	VIS
RNC90Y42R700%&	42.700	0.3	V, T, A, B, D	-	P, R	VIS
	Resistance	Power	Resistance	Level 1	Level 2	
Part Number	Value (Ohms)	Rating (W)	Tolerance (%)	(FRL) (&)	(FRL) (&)	Manufacturer
RNC90Y43R200%&	43.200	0.3	V, T, A, B, D, F	-	P, R	VIS
RNC90Y43R700%&	43.700	0.3	V, T, A, B, D	-	P, R	VIS
RNC90Y44R200%&	44.200	0.3	V, T, A, B, D, F	-	P, R	VIS
RNC90Y44R800%&	44.800	0.3	V, T, A, B, D	-	P, R	VIS
RNC90Y45R300%&	45.300	0.3	V, T, A, B, D, F	-	P, R	VIS
RNC90Y45R900%&	45.900	0.3	V, T, A, B, D	-	P, R	VIS
RNC90Y46R400%&	46.400	0.3	V, T, A, B, D, F	-	P, R	VIS
RNC90Y47R000%&	47.000	0.3	V, T, A, B, D	-	P, R	VIS
RNC90Y47R500%&	47.500	0.3	V, T, A, B, D, F	-	P, R	VIS
RNC90Y48R100%&	48.100	0.3	V, T, A, B, D	-	P, R	VIS
RNC90Y48R700%&	48.700	0.3	V, T, A, B, D, F	-	P, R	VIS
RNC90Y49R300%&	49.300	0.3	V, T, A, B, D	-	P, R	VIS
RNC90Y49R900%&	49.900	0.3	V, T, A, B, D, F	-	P, R	VIS
RNC90Y50R500%&	50.500	0.3	V, T, A, B, D	-	P, R	VIS
RNC90Y51R100%&	51.100	0.3	V, T, A, B, D, F	-	P, R	VIS
RNC90Y51R700%&	51.700	0.3	V, T, A, B, D	-	P, R	VIS
RNC90Y52R300%&	52.300	0.3	V, T, A, B, D, F	-	P, R	VIS
RNC90Y53R000%&	53.000	0.3	V, T, A, B, D	-	P, R	VIS
	Resistance	Power	Resistance	Level 1	Level 2	
Part Number	Value (Ohms)	Rating (W)	Tolerance (%)	(FRL) (&)	(FRL) (&)	Manufacturer
RNC90Y53R600%&	53.600	0.3	V, T, A, B, D, F	-	P, R	VIS
RNC90Y54R200%&	54.200	0.3	V, T, A, B, D	-	P, R	VIS
RNC90Y54R900%&	54.900	0.3	V, T, A, B, D, F	-	P, R	VIS

RNC90Y55R600%&	55.600	0.3	V, T, A, B, D	-	P, R	VIS
RNC90Y56R200%&	56.200	0.3	V, T, A, B, D, F	-	P, R	VIS
RNC90Y56R900%&	56.900	0.3	V, T, A, B, D	-	P, R	VIS
RNC90Y57R600%&	57.600	0.3	V, T, A, B, D, F	-	P, R	VIS
RNC90Y58R300%&	58.300	0.3	V, T, A, B, D	-	P, R	VIS
RNC90Y59R000%&	59.000	0.3	V, T, A, B, D, F	-	P, R	VIS
RNC90Y59R700%&	59.700	0.3	V, T, A, B, D	-	P, R	VIS
RNC90Y60R400%&	60.400	0.3	V, T, A, B, D, F	-	P, R	VIS
RNC90Y61R200%&	61.200	0.3	V, T, A, B, D	-	P, R	VIS
RNC90Y61R900%&	61.900	0.3	V, T, A, B, D, F	-	P, R	VIS
RNC90Y62R600%&	62.600	0.3	V, T, A, B, D	-	P, R	VIS
RNC90Y63R400%&	63.400	0.3	V, T, A, B, D, F	-	P, R	VIS
RNC90Y64R200%&	64.200	0.3	V, T, A, B, D	-	P, R	VIS
RNC90Y64R900%&	64.900	0.3	V, T, A, B, D, F	-	P, R	VIS
RNC90Y65R700%&	65.700	0.3	V, T, A, B, D	-	P, R	VIS
	Resistance	Power	Resistance	Level 1	Level 2	
Part Number	Value (Ohms)	Rating (W)	Tolerance (%)	(FRL) (&)	(FRL) (&)	Manufacturer
RNC90Y66R500%&	66.500	0.3	V, T, A, B, D, F	-	P, R	VIS
RNC90Y67R300%&	67.300	0.3	V, T, A, B, D	-	P, R	VIS
RNC90Y68R100%&	68.100	0.3	V, T, A, B, D, F	-	P, R	VIS
RNC90Y69R000%&	69.000	0.3	V, T, A, B, D	-	P, R	VIS
RNC90Y69R800%&	69.800	0.3	V, T, A, B, D, F	-	P, R	VIS
RNC90Y70R600%&	70.600	0.3	V, T, A, B, D	-	P, R	VIS
RNC90Y71R500%&	71.500	0.3	V, T, A, B, D, F	-	P, R	VIS
RNC90Y72R300%&	72.300	0.3	V, T, A, B, D	-	P, R	VIS
RNC90Y73R200%&	73.200	0.3	V, T, A, B, D, F	-	P, R	VIS
RNC90Y74R100%&	74.100	0.3	V, T, A, B, D	-	P, R	VIS
RNC90Y75R000%&	75.000	0.3	V, T, A, B, D, F	-	P, R	VIS
RNC90Y75R900%&	75.900	0.3	V, T, A, B, D	-	P, R	VIS
RNC90Y76R800%&	76.800	0.3	V, T, A, B, D, F	-	P, R	VIS
RNC90Y77R700%&	77.700	0.3	V, T, A, B, D	-	P, R	VIS
RNC90Y78R700%&	78.700	0.3	V, T, A, B, D, F	-	P, R	VIS
RNC90Y79R600%&	79.600	0.3	V, T, A, B, D	-	P, R	VIS
RNC90Y80R600%&	80.600	0.3	V, T, A, B, D, F	-	P, R	VIS
RNC90Y81R600%&	81.600	0.3	V, T, A, B, D	-	P, R	VIS
	Resistance	Power	Resistance	Level 1	Level 2	
Part Number	Value (Ohms)	Rating (W)	Tolerance (%)	(FRL) (&)	(FRL) (&)	Manufacturer
RNC90Y82R500%&	82.500	0.3	V, T, A, B, D, F	-	P, R	VIS
RNC90Y83R500%&	83.500	0.3	V, T, A, B, D	-	P, R	VIS
RNC90Y84R500%&	84.500	0.3	V, T, A, B, D, F	-	P, R	VIS
RNC90Y85R600%&	85.600	0.3	V, T, A, B, D	-	P, R	VIS
RNC90Y86R600%&	86.600	0.3	V, T, A, B, D, F	-	P, R	VIS
RNC90Y87R600%&	87.600	0.3	V, T, A, B, D	-	P, R	VIS
RNC90Y88R700%&	88.700	0.3	V, T, A, B, D, F	-	P, R	VIS
RNC90Y89R800%&	89.800	0.3	V, T, A, B, D	-	P, R	VIS
RNC90Y90R900%&	90.900	0.3	V, T, A, B, D, F	-	P, R	VIS
RNC90Y92R000%&	92.000	0.3	V, T, A, B, D	-	P, R	VIS

RNC90Y93R100%&	93.100	0.3	V, T, A, B, D, F	-	P, R	VIS
RNC90Y94R200%&	94.200	0.3	V, T, A, B, D	-	P, R	VIS
RNC90Y95R300%&	95.300	0.3	V, T, A, B, D, F	-	P, R	VIS
RNC90Y96R500%&	96.500	0.3	V, T, A, B, D	-	P, R	VIS
RNC90Y97R600%&	97.600	0.3	V, T, A, B, D, F	-	P, R	VIS
RNC90Y98R800%&	98.800	0.3	V, T, A, B, D	-	P, R	VIS

RNC90Y Film Resistors: 100.00 Ohms through 988.00 Ohms

	Resistance	Power	Resistance	Level 1	Level 2	
Part Number	Value (Ohms)	Rating (W)	Tolerance (%)	(FRL) (&)	(FRL) (&)	Manufacturer
RNC90Y100R00%&	100.00	0.3	V, T, A, B, D, F	-	P, R	VIS, WIL
RNC90Y101R00%&	101.00	0.3	V, T, A, B, D	-	P, R	VIS, WIL
RNC90Y102R00%&	102.00	0.3	V, T, A, B, D, F	-	P, R	VIS, WIL
RNC90Y104R00%&	104.00	0.3	V, T, A, B, D	-	P, R	VIS, WIL
RNC90Y105R00%&	105.00	0.3	V, T, A, B, D, F	-	P, R	VIS, WIL
RNC90Y106R00%&	106.00	0.3	V, T, A, B, D	-	P, R	VIS, WIL
RNC90Y107R00%&	107.00	0.3	V, T, A, B, D, F	-	P, R	VIS, WIL
RNC90Y109R00%&	109.00	0.3	V, T, A, B, D	-	P, R	VIS, WIL
RNC90Y110R00%&	110.00	0.3	V, T, A, B, D, F	-	P, R	VIS, WIL
RNC90Y111R00%&	111.00	0.3	V, T, A, B, D	-	P, R	VIS, WIL
RNC90Y113R00%&	113.00	0.3	V, T, A, B, D, F	-	P, R	VIS, WIL
RNC90Y114R00%&	114.00	0.3	V, T, A, B, D	-	P, R	VIS, WIL
RNC90Y115R00%&	115.00	0.3	V, T, A, B, D, F	-	P, R	VIS, WIL
RNC90Y117R00%&	117.00	0.3	V, T, A, B, D	-	P, R	VIS, WIL
	Resistance	Power	Resistance	Level 1	Level 2	
Part Number	Value (Ohms)	Rating (W)	Tolerance (%)	(FRL) (&)	(FRL) (&)	Manufacturer
RNC90Y118R00%&	118.00	0.3	V, T, A, B, D, F	-	P, R	VIS, WIL
RNC90Y120R00%&	120.00	0.3	V, T, A, B, D	-	P, R	VIS, WIL
RNC90Y121R00%&	121.00	0.3	V, T, A, B, D, F	-	P, R	VIS, WIL
RNC90Y123R00%&	123.00	0.3	V, T, A, B, D	-	P, R	VIS, WIL
RNC90Y124R00%&	124.00	0.3	V, T, A, B, D, F	-	P, R	VIS, WIL
RNC90Y126R00%&	126.00	0.3	V, T, A, B, D	-	P, R	VIS, WIL
RNC90Y127R00%&	127.00	0.3	V, T, A, B, D, F	-	P, R	VIS, WIL
RNC90Y129R00%&	129.00	0.3	V, T, A, B, D	-	P, R	VIS, WIL
RNC90Y130R00%&	130.00	0.3	V, T, A, B, D, F	-	P, R	VIS, WIL
RNC90Y132R00%&	132.00	0.3	V, T, A, B, D	-	P, R	VIS, WIL
RNC90Y133R00%&	133.00	0.3	V, T, A, B, D, F	-	P, R	VIS, WIL
RNC90Y135R00%&	135.00	0.3	V, T, A, B, D	-	P, R	VIS, WIL
RNC90Y137R00%&	137.00	0.3	V, T, A, B, D, F	-	P, R	VIS, WIL
RNC90Y138R00%&	138.00	0.3	V, T, A, B, D	-	P, R	VIS, WIL
RNC90Y140R00%&	140.00	0.3	V, T, A, B, D, F	-	P, R	VIS, WIL
RNC90Y142R00%&	142.00	0.3	V, T, A, B, D	-	P, R	VIS, WIL
RNC90Y143R00%&	143.00	0.3	V, T, A, B, D, F	-	P, R	VIS, WIL
RNC90Y145R00%&	145.00	0.3	V, T, A, B, D	-	P, R	VIS, WIL

	Resistance	Power	Resistance	Level 1	Level 2	
Part Number	Value (Ohms)	Rating (W)	Tolerance (%)	(FRL) (&)	(FRL) (&)	Manufacturer
RNC90Y147R00%&	147.00	0.3	V, T, A, B, D, F	-	P, R	VIS, WIL
RNC90Y149R00%&	149.00	0.3	V, T, A, B, D	-	P, R	VIS, WIL
RNC90Y150R00%&	150.00	0.3	V, T, A, B, D, F	-	P, R	VIS, WIL
RNC90Y152R00%&	152.00	0.3	V, T, A, B, D	-	P, R	VIS, WIL
RNC90Y154R00%&	154.00	0.3	V, T, A, B, D, F	-	P, R	VIS, WIL
RNC90Y156R00%&	156.00	0.3	V, T, A, B, D	-	P, R	VIS, WIL
RNC90Y158R00%&	158.00	0.3	V, T, A, B, D, F	-	P, R	VIS, WIL
RNC90Y160R00%&	160.00	0.3	V, T, A, B, D	-	P, R	VIS, WIL
RNC90Y162R00%&	162.00	0.3	V, T, A, B, D, F	-	P, R	VIS, WIL
RNC90Y164R00%&	164.00	0.3	V, T, A, B, D	-	P, R	VIS, WIL
RNC90Y165R00%&	165.00	0.3	V, T, A, B, D, F	-	P, R	VIS, WIL
RNC90Y167R00%&	167.00	0.3	V, T, A, B, D	-	P, R	VIS, WIL
RNC90Y169R00%&	169.00	0.3	V, T, A, B, D, F	-	P, R	VIS, WIL
RNC90Y172R00%&	172.00	0.3	V, T, A, B, D	-	P, R	VIS, WIL
RNC90Y174R00%&	174.00	0.3	V, T, A, B, D, F	-	P, R	VIS, WIL
RNC90Y176R00%&	176.00	0.3	V, T, A, B, D	-	P, R	VIS, WIL
RNC90Y178R00%&	178.00	0.3	V, T, A, B, D, F	-	P, R	VIS, WIL
RNC90Y180R00%&	180.00	0.3	V, T, A, B, D	-	P, R	VIS, WIL
	Resistance	Power	Resistance	Level 1	Level 2	
Part Number	Value (Ohms)	Rating (W)	Tolerance (%)	(FRL) (&)	(FRL) (&)	Manufacturer
RNC90Y182R00%&	182.00	0.3	V, T, A, B, D, F	-	P, R	VIS, WIL
RNC90Y184R00%&	184.00	0.3	V, T, A, B, D	-	P, R	VIS, WIL
RNC90Y187R00%&	187.00	0.3	V, T, A, B, D, F	-	P, R	VIS, WIL
RNC90Y189R00%&	189.00	0.3	V, T, A, B, D	-	P, R	VIS, WIL
RNC90Y191R00%&	191.00	0.3	V, T, A, B, D, F	-	P, R	VIS, WIL
RNC90Y193R00%&	193.00	0.3	V, T, A, B, D	-	P, R	VIS, WIL
RNC90Y196R00%&	196.00	0.3	V, T, A, B, D, F	-	P, R	VIS, WIL
RNC90Y198R00%&	198.00	0.3	V, T, A, B, D	-	P, R	VIS, WIL
RNC90Y200R00%&	200.00	0.3	V, T, A, B, D, F	-	P, R	VIS, WIL
RNC90Y203R00%&	203.00	0.3	V, T, A, B, D	-	P, R	VIS, WIL
RNC90Y205R00%&	205.00	0.3	V, T, A, B, D, F	-	P, R	VIS, WIL
RNC90Y208R00%&	208.00	0.3	V, T, A, B, D	-	P, R	VIS, WIL
RNC90Y210R00%&	210.00	0.3	V, T, A, B, D, F	-	P, R	VIS, WIL
RNC90Y213R00%&	213.00	0.3	V, T, A, B, D	-	P, R	VIS, WIL
RNC90Y215R00%&	215.00	0.3	V, T, A, B, D, F	-	P, R	VIS, WIL
RNC90Y218R00%&	218.00	0.3	V, T, A, B, D	-	P, R	VIS, WIL
RNC90Y221R00%&	221.00	0.3	V, T, A, B, D, F	-	P, R	VIS, WIL
RNC90Y223R00%&	223.00	0.3	V, T, A, B, D	-	P, R	VIS, WIL
	Resistance	Power	Resistance	Level 1	Level 2	
Part Number	Value (Ohms)	Rating (W)	Tolerance (%)	(FRL) (&)	(FRL) (&)	Manufacturer
RNC90Y226R00%&	226.00	0.3	V, T, A, B, D, F	-	P, R	VIS, WIL
RNC90Y229R00%&	229.00	0.3	V, T, A, B, D	-	P, R	VIS, WIL
RNC90Y232R00%&	232.00	0.3	V, T, A, B, D, F	-	P, R	VIS, WIL
RNC90Y234R00%&	234.00	0.3	V, T, A, B, D	-	P, R	VIS, WIL
RNC90Y237R00%&	237.00	0.3	V, T, A, B, D, F	-	P, R	VIS, WIL

RNC90Y240R00%&	240.00	0.3	V, T, A, B, D	-	P, R	VIS, WIL
RNC90Y243R00%&	243.00	0.3	V, T, A, B, D, F	-	P, R	VIS, WIL
RNC90Y246R00%&	246.00	0.3	V, T, A, B, D	-	P, R	VIS, WIL
RNC90Y249R00%&	249.00	0.3	V, T, A, B, D, F	-	P, R	VIS, WIL
RNC90Y252R00%&	252.00	0.3	V, T, A, B, D	-	P, R	VIS, WIL
RNC90Y255R00%&	255.00	0.3	V, T, A, B, D, F	-	P, R	VIS, WIL
RNC90Y258R00%&	258.00	0.3	V, T, A, B, D	-	P, R	VIS, WIL
RNC90Y261R00%&	261.00	0.3	V, T, A, B, D, F	-	P, R	VIS, WIL
RNC90Y264R00%&	264.00	0.3	V, T, A, B, D	-	P, R	VIS, WIL
RNC90Y267R00%&	267.00	0.3	V, T, A, B, D, F	-	P, R	VIS, WIL
RNC90Y271R00%&	271.00	0.3	V, T, A, B, D	-	P, R	VIS, WIL
RNC90Y274R00%&	274.00	0.3	V, T, A, B, D, F	-	P, R	VIS, WIL
RNC90Y277R00%&	277.00	0.3	V, T, A, B, D	-	P, R	VIS, WIL
	Resistance	Power	Resistance	Level 1	Level 2	
Part Number	Value (Ohms)	Rating (W)	Tolerance (%)	(FRL) (&)	(FRL) (&)	Manufacturer
RNC90Y280R00%&	280.00	0.3	V, T, A, B, D, F	-	P, R	VIS, WIL
RNC90Y284R00%&	284.00	0.3	V, T, A, B, D	-	P, R	VIS, WIL
RNC90Y287R00%&	287.00	0.3	V, T, A, B, D, F	-	P, R	VIS, WIL
RNC90Y291R00%&	291.00	0.3	V, T, A, B, D	-	P, R	VIS, WIL
RNC90Y294R00%&	294.00	0.3	V, T, A, B, D, F	-	P, R	VIS, WIL
RNC90Y298R00%&	298.00	0.3	V, T, A, B, D	-	P, R	VIS, WIL
RNC90Y301R00%&	301.00	0.3	V, T, A, B, D, F	-	P, R	VIS, WIL
RNC90Y305R00%&	305.00	0.3	V, T, A, B, D	-	P, R	VIS, WIL
RNC90Y309R00%&	309.00	0.3	V, T, A, B, D, F	-	P, R	VIS, WIL
RNC90Y312R00%&	312.00	0.3	V, T, A, B, D	-	P, R	VIS, WIL
RNC90Y316R00%&	316.00	0.3	V, T, A, B, D, F	-	P, R	VIS, WIL
RNC90Y320R00%&	320.00	0.3	V, T, A, B, D	-	P, R	VIS, WIL
RNC90Y324R00%&	324.00	0.3	V, T, A, B, D, F	-	P, R	VIS, WIL
RNC90Y328R00%&	328.00	0.3	V, T, A, B, D	-	P, R	VIS, WIL
RNC90Y332R00%&	332.00	0.3	V, T, A, B, D, F	-	P, R	VIS, WIL
RNC90Y336R00%&	336.00	0.3	V, T, A, B, D	-	P, R	VIS, WIL
RNC90Y340R00%&	340.00	0.3	V, T, A, B, D, F	-	P, R	VIS, WIL
RNC90Y344R00%&	344.00	0.3	V, T, A, B, D	-	P, R	VIS, WIL
	Resistance	Power	Resistance	Level 1	Level 2	
Part Number	Value (Ohms)	Rating (W)	Tolerance (%)	(FRL) (&)	(FRL) (&)	Manufacturer
RNC90Y348R00%&	348.00	0.3	V, T, A, B, D, F	-	P, R	VIS, WIL
RNC90Y352R00%&	352.00	0.3	V, T, A, B, D	-	P, R	VIS, WIL
RNC90Y357R00%&	357.00	0.3	V, T, A, B, D, F	-	P, R	VIS, WIL
RNC90Y361R00%&	361.00	0.3	V, T, A, B, D	-	P, R	VIS, WIL
RNC90Y365R00%&	365.00	0.3	V, T, A, B, D, F	-	P, R	VIS, WIL
RNC90Y370R00%&	370.00	0.3	V, T, A, B, D	-	P, R	VIS, WIL
RNC90Y374R00%&	374.00	0.3	V, T, A, B, D, F	-	P, R	VIS, WIL
RNC90Y379R00%&	379.00	0.3	V, T, A, B, D	-	P, R	VIS, WIL
RNC90Y383R00%&	383.00	0.3	V, T, A, B, D, F	-	P, R	VIS, WIL
RNC90Y388R00%&	388.00	0.3	V, T, A, B, D	-	P, R	VIS, WIL
RNC90Y392R00%&	392.00	0.3	V, T, A, B, D, F	-	P, R	VIS, WIL
RNC90Y397R00%&	397.00	0.3	V, T, A, B, D	-	P, R	VIS, WIL

RNC90Y402R00%&	402.00	0.3	V, T, A, B, D, F	-	P, R	VIS, WIL
RNC90Y407R00%&	407.00	0.3	V, T, A, B, D	-	P, R	VIS, WIL
RNC90Y412R00%&	412.00	0.3	V, T, A, B, D, F	-	P, R	VIS, WIL
RNC90Y417R00%&	417.00	0.3	V, T, A, B, D	-	P, R	VIS, WIL
RNC90Y422R00%&	422.00	0.3	V, T, A, B, D, F	-	P, R	VIS, WIL
RNC90Y427R00%&	427.00	0.3	V, T, A, B, D	-	P, R	VIS, WIL
	Resistance	Power	Resistance	Level 1	Level 2	
Part Number	Value (Ohms)	Rating (W)	Tolerance (%)	(FRL) (&)	(FRL) (&)	Manufacturer
RNC90Y432R00%&	432.00	0.3	V, T, A, B, D, F	-	P, R	VIS, WIL
RNC90Y437R00%&	437.00	0.3	V, T, A, B, D	-	P, R	VIS, WIL
RNC90Y442R00%&	442.00	0.3	V, T, A, B, D, F	-	P, R	VIS, WIL
RNC90Y448R00%&	448.00	0.3	V, T, A, B, D	-	P, R	VIS, WIL
RNC90Y453R00%&	453.00	0.3	V, T, A, B, D, F	-	P, R	VIS, WIL
RNC90Y459R00%&	459.00	0.3	V, T, A, B, D	-	P, R	VIS, WIL
RNC90Y464R00%&	464.00	0.3	V, T, A, B, D, F	-	P, R	VIS, WIL
RNC90Y470R00%&	470.00	0.3	V, T, A, B, D	-	P, R	VIS, WIL
RNC90Y475R00%&	475.00	0.3	V, T, A, B, D, F	-	P, R	VIS, WIL
RNC90Y481R00%&	481.00	0.3	V, T, A, B, D	-	P, R	VIS, WIL
RNC90Y487R00%&	487.00	0.3	V, T, A, B, D, F	-	P, R	VIS, WIL
RNC90Y493R00%&	493.00	0.3	V, T, A, B, D	-	P, R	VIS, WIL
RNC90Y499R00%&	499.00	0.3	V, T, A, B, D, F	-	P, R	VIS, WIL
RNC90Y505R00%&	505.00	0.3	V, T, A, B, D	-	P, R	VIS, WIL
RNC90Y511R00%&	511.00	0.3	V, T, A, B, D, F	-	P, R	VIS, WIL
RNC90Y517R00%&	517.00	0.3	V, T, A, B, D	-	P, R	VIS, WIL
RNC90Y523R00%&	523.00	0.3	V, T, A, B, D, F	-	P, R	VIS, WIL
RNC90Y530R00%&	530.00	0.3	V, T, A, B, D	-	P, R	VIS, WIL
	Resistance	Power	Resistance	Level 1	Level 2	
Part Number	Value (Ohms)	Rating (W)	Tolerance (%)	(FRL) (&)	(FRL) (&)	Manufacturer
RNC90Y536R00%&	536.00	0.3	V, T, A, B, D, F	-	P, R	VIS, WIL
RNC90Y542R00%&	542.00	0.3	V, T, A, B, D	-	P, R	VIS, WIL
RNC90Y549R00%&	549.00	0.3	V, T, A, B, D, F	-	P, R	VIS, WIL
RNC90Y556R00%&	556.00	0.3	V, T, A, B, D	-	P, R	VIS, WIL
RNC90Y562R00%&	562.00	0.3	V, T, A, B, D, F	-	P, R	VIS, WIL
RNC90Y569R00%&	569.00	0.3	V, T, A, B, D	-	P, R	VIS, WIL
RNC90Y576R00%&	576.00	0.3	V, T, A, B, D, F	-	P, R	VIS, WIL
RNC90Y583R00%&	583.00	0.3	V, T, A, B, D	-	P, R	VIS, WIL
RNC90Y590R00%&	590.00	0.3	V, T, A, B, D, F	-	P, R	VIS, WIL
RNC90Y597R00%&	597.00	0.3	V, T, A, B, D	-	P, R	VIS, WIL
RNC90Y604R00%&	604.00	0.3	V, T, A, B, D, F	-	P, R	VIS, WIL
RNC90Y612R00%&	612.00	0.3	V, T, A, B, D	-	P, R	VIS, WIL
RNC90Y619R00%&	619.00	0.3	V, T, A, B, D, F	-	P, R	VIS, WIL
RNC90Y626R00%&	626.00	0.3	V, T, A, B, D	-	P, R	VIS, WIL
RNC90Y634R00%&	634.00	0.3	V, T, A, B, D, F	-	P, R	VIS, WIL
RNC90Y642R00%&	642.00	0.3	V, T, A, B, D	-	P, R	VIS, WIL
RNC90Y649R00%&	649.00	0.3	V, T, A, B, D, F	-	P, R	VIS, WIL
RNC90Y657R00%&	657.00	0.3	V, T, A, B, D	-	P, R	VIS, WIL
	Resistance	Power	Resistance	Level 1	Level 2	

Part Number	Value (Ohms)	Rating (W)	Tolerance (%)	(FRL) (&)	(FRL) (&)	Manufacturer
RNC90Y665R00%&	665.00	0.3	V, T, A, B, D, F	-	P, R	VIS, WIL
RNC90Y673R00%&	673.00	0.3	V, T, A, B, D	-	P, R	VIS, WIL
RNC90Y681R00%&	681.00	0.3	V, T, A, B, D, F	-	P, R	VIS, WIL
RNC90Y690R00%&	690.00	0.3	V, T, A, B, D	-	P, R	VIS, WIL
RNC90Y698R00%&	698.00	0.3	V, T, A, B, D, F	-	P, R	VIS, WIL
RNC90Y706R00%&	706.00	0.3	V, T, A, B, D	-	P, R	VIS, WIL
RNC90Y715R00%&	715.00	0.3	V, T, A, B, D, F	-	P, R	VIS, WIL
RNC90Y723R00%&	723.00	0.3	V, T, A, B, D	-	P, R	VIS, WIL
RNC90Y732R00%&	732.00	0.3	V, T, A, B, D, F	-	P, R	VIS, WIL
RNC90Y741R00%&	741.00	0.3	V, T, A, B, D	-	P, R	VIS, WIL
RNC90Y750R00%&	750.00	0.3	V, T, A, B, D, F	-	P, R	VIS, WIL
RNC90Y759R00%&	759.00	0.3	V, T, A, B, D	-	P, R	VIS, WIL
RNC90Y767R00%&	767.00	0.3	V, T, A, B, D, F	-	P, R	VIS, WIL
RNC90Y776R00%&	776.00	0.3	V, T, A, B, D	-	P, R	VIS, WIL
RNC90Y786R00%&	786.00	0.3	V, T, A, B, D, F	-	P, R	VIS, WIL
RNC90Y795R00%&	795.00	0.3	V, T, A, B, D	-	P, R	VIS, WIL
RNC90Y805R00%&	805.00	0.3	V, T, A, B, D, F	-	P, R	VIS, WIL
RNC90Y815R00%&	815.00	0.3	V, T, A, B, D	-	P, R	VIS, WIL
	Resistance	Power	Resistance	Level 1	Level 2	
Part Number	Value (Ohms)	Rating (W)	Tolerance (%)	(FRL) (&)	(FRL) (&)	Manufacturer
RNC90Y824R00%&	824.00	0.3	V, T, A, B, D, F	-	P, R	VIS, WIL
RNC90Y834R00%&	834.00	0.3	V, T, A, B, D	-	P, R	VIS, WIL
RNC90Y844R00%&	844.00	0.3	V, T, A, B, D, F	-	P, R	VIS, WIL
RNC90Y855R00%&	855.00	0.3	V, T, A, B, D	-	P, R	VIS, WIL
RNC90Y865R00%&	865.00	0.3	V, T, A, B, D, F	-	P, R	VIS, WIL
RNC90Y875R00%&	875.00	0.3	V, T, A, B, D	-	P, R	VIS, WIL
RNC90Y886R00%&	886.00	0.3	V, T, A, B, D, F	-	P, R	VIS, WIL
RNC90Y898R00%&	898.00	0.3	V, T, A, B, D	-	P, R	VIS, WIL
RNC90Y908R00%&	908.00	0.3	V, T, A, B, D, F	-	P, R	VIS, WIL
RNC90Y919R00%&	919.00	0.3	V, T, A, B, D	-	P, R	VIS, WIL
RNC90Y930R00%&	930.00	0.3	V, T, A, B, D, F	-	P, R	VIS, WIL
RNC90Y941R00%&	941.00	0.3	V, T, A, B, D	-	P, R	VIS, WIL
RNC90Y952R00%&	952.00	0.3	V, T, A, B, D, F	-	P, R	VIS, WIL
RNC90Y964R00%&	964.00	0.3	V, T, A, B, D	-	P, R	VIS, WIL
RNC90Y975R00%&	975.00	0.3	V, T, A, B, D, F	-	P, R	VIS, WIL
RNC90Y988R00%&	988.00	0.3	V, T, A, B, D	-	P, R	VIS, WIL

RNC90Y Film Resistors: 1,000.0 Ohms through 9,880.0 Ohms

	Resistance	Power	Resistance	Level 1	Level 2	
Part Number	Value (Ohms)	Rating (W)	Tolerance (%)	(FRL) (&)	(FRL) (&)	Manufacturer
RNC90Y1K0000%&	1,000.0	0.3	V, T, A, B, D, F	-	P, R	VIS, WIL
RNC90Y1K0100%&	1,010.0	0.3	V, T, A, B, D	-	P, R	VIS, WIL
RNC90Y1K0200%&	1,020.0	0.3	V, T, A, B, D, F	-	P, R	VIS, WIL

RNC90Y1K0400%&	1,040.0	0.3	V, T, A, B, D	-	P, R	VIS, WIL
RNC90Y1K0500%&	1,050.0	0.3	V, T, A, B, D, F	-	P, R	VIS, WIL
RNC90Y1K0600%&	1,060.0	0.3	V, T, A, B, D	-	P, R	VIS, WIL
RNC90Y1K0700%&	1,070.0	0.3	V, T, A, B, D, F	-	P, R	VIS, WIL
RNC90Y1K0900%&	1,090.0	0.3	V, T, A, B, D	-	P, R	VIS, WIL
RNC90Y1K1000%&	1,100.0	0.3	V, T, A, B, D, F	-	P, R	VIS, WIL
RNC90Y1K1100%&	1,110.0	0.3	V, T, A, B, D	-	P, R	VIS, WIL
RNC90Y1K1300%&	1,130.0	0.3	V, T, A, B, D, F	-	P, R	VIS, WIL
RNC90Y1K1400%&	1,140.0	0.3	V, T, A, B, D	-	P, R	VIS, WIL
RNC90Y1K1500%&	1,150.0	0.3	V, T, A, B, D, F	-	P, R	VIS, WIL
RNC90Y1K1700%&	1,170.0	0.3	V, T, A, B, D	-	P, R	VIS, WIL
	Resistance	Power	Resistance	Level 1	Level 2	
Part Number	Value (Ohms)	Rating (W)	Tolerance (%)	(FRL) (&)	(FRL) (&)	Manufacturer
RNC90Y1K1800%&	1,180.0	0.3	V, T, A, B, D, F	-	P, R	VIS, WIL
RNC90Y1K2000%&	1,200.0	0.3	V, T, A, B, D	-	P, R	VIS, WIL
RNC90Y1K2100%&	1,210.0	0.3	V, T, A, B, D, F	-	P, R	VIS, WIL
RNC90Y1K2300%&	1,230.0	0.3	V, T, A, B, D	-	P, R	VIS, WIL
RNC90Y1K2400%&	1,240.0	0.3	V, T, A, B, D, F	-	P, R	VIS, WIL
RNC90Y1K2600%&	1,260.0	0.3	V, T, A, B, D	-	P, R	VIS, WIL
RNC90Y1K2700%&	1,270.0	0.3	V, T, A, B, D, F	-	P, R	VIS, WIL
RNC90Y1K2900%&	1,290.0	0.3	V, T, A, B, D	-	P, R	VIS, WIL
RNC90Y1K3000%&	1,300.0	0.3	V, T, A, B, D, F	-	P, R	VIS, WIL
RNC90Y1K3200%&	1,320.0	0.3	V, T, A, B, D	-	P, R	VIS, WIL
RNC90Y1K3300%&	1,330.0	0.3	V, T, A, B, D, F	-	P, R	VIS, WIL
RNC90Y1K3500%&	1,350.0	0.3	V, T, A, B, D	-	P, R	VIS, WIL
RNC90Y1K3700%&	1,370.0	0.3	V, T, A, B, D, F	-	P, R	VIS, WIL
RNC90Y1K3800%&	1,380.0	0.3	V, T, A, B, D	-	P, R	VIS, WIL
RNC90Y1K4000%&	1,400.0	0.3	V, T, A, B, D, F	-	P, R	VIS, WIL
RNC90Y1K4200%&	1,420.0	0.3	V, T, A, B, D	-	P, R	VIS, WIL
RNC90Y1K4300%&	1,430.0	0.3	V, T, A, B, D, F	-	P, R	VIS, WIL
RNC90Y1K4500%&	1,450.0	0.3	V, T, A, B, D	-	P, R	VIS, WIL
	Resistance	Power	Resistance	Level 1	Level 2	
Part Number	Value (Ohms)	Rating (W)	Tolerance (%)	(FRL) (&)	(FRL) (&)	Manufacturer
RNC90Y1K4700%&	1,470.0	0.3	V, T, A, B, D, F	-	P, R	VIS, WIL
RNC90Y1K4900%&	1,490.0	0.3	V, T, A, B, D	-	P, R	VIS, WIL
RNC90Y1K5000%&	1,500.0	0.3	V, T, A, B, D, F	-	P, R	VIS, WIL
RNC90Y1K5200%&	1,520.0	0.3	V, T, A, B, D	-	P, R	VIS, WIL
RNC90Y1K5400%&	1,540.0	0.3	V, T, A, B, D, F	-	P, R	VIS, WIL
RNC90Y1K5600%&	1,560.0	0.3	V, T, A, B, D	-	P, R	VIS, WIL
RNC90Y1K5800%&	1,580.0	0.3	V, T, A, B, D, F	-	P, R	VIS, WIL
RNC90Y1K6000%&	1,600.0	0.3	V, T, A, B, D	-	P, R	VIS, WIL
RNC90Y1K6200%&	1,620.0	0.3	V, T, A, B, D, F	-	P, R	VIS, WIL
RNC90Y1K6400%&	1,640.0	0.3	V, T, A, B, D	-	P, R	VIS, WIL
RNC90Y1K6500%&	1,650.0	0.3	V, T, A, B, D, F	-	P, R	VIS, WIL
RNC90Y1K6700%&	1,670.0	0.3	V, T, A, B, D	-	P, R	VIS, WIL
RNC90Y1K6900%&	1,690.0	0.3	V, T, A, B, D, F	-	P, R	VIS, WIL
RNC90Y1K7200%&	1,720.0	0.3	V, T, A, B, D	-	P, R	VIS, WIL

RNC90Y1K7400%&	1,740.0	0.3	V, T, A, B, D, F	-	P, R	VIS, WIL
RNC90Y1K7600%&	1,760.0	0.3	V, T, A, B, D	-	P, R	VIS, WIL
RNC90Y1K7800%&	1,780.0	0.3	V, T, A, B, D, F	-	P, R	VIS, WIL
RNC90Y1K8000%&	1,800.0	0.3	V, T, A, B, D	-	P, R	VIS, WIL
	Resistance	Power	Resistance	Level 1	Level 2	
Part Number	Value (Ohms)	Rating (W)	Tolerance (%)	(FRL) (&)	(FRL) (&)	Manufacturer
RNC90Y1K8200%&	1,820.0	0.3	V, T, A, B, D, F	-	P, R	VIS, WIL
RNC90Y1K8400%&	1,840.0	0.3	V, T, A, B, D	-	P, R	VIS, WIL
RNC90Y1K8700%&	1,870.0	0.3	V, T, A, B, D, F	-	P, R	VIS, WIL
RNC90Y1K8900%&	1,890.0	0.3	V, T, A, B, D	-	P, R	VIS, WIL
RNC90Y1K9100%&	1,910.0	0.3	V, T, A, B, D, F	-	P, R	VIS, WIL
RNC90Y1K9300%&	1,930.0	0.3	V, T, A, B, D	-	P, R	VIS, WIL
RNC90Y1K9600%&	1,960.0	0.3	V, T, A, B, D, F	-	P, R	VIS, WIL
RNC90Y1K9800%&	1,980.0	0.3	V, T, A, B, D	-	P, R	VIS, WIL
RNC90Y2K0000%&	2,000.0	0.3	V, T, A, B, D, F	-	P, R	VIS, WIL
RNC90Y2K0300%&	2,030.0	0.3	V, T, A, B, D	-	P, R	VIS, WIL
RNC90Y2K0500%&	2,050.0	0.3	V, T, A, B, D, F	-	P, R	VIS, WIL
RNC90Y2K0800%&	2,080.0	0.3	V, T, A, B, D	-	P, R	VIS, WIL
RNC90Y2K1000%&	2,100.0	0.3	V, T, A, B, D, F	-	P, R	VIS, WIL
RNC90Y2K1300%&	2,130.0	0.3	V, T, A, B, D	-	P, R	VIS, WIL
RNC90Y2K1500%&	2,150.0	0.3	V, T, A, B, D, F	-	P, R	VIS, WIL
RNC90Y2K1800%&	2,180.0	0.3	V, T, A, B, D	-	P, R	VIS, WIL
RNC90Y2K2100%&	2,210.0	0.3	V, T, A, B, D, F	-	P, R	VIS, WIL
RNC90Y2K2300%&	2,230.0	0.3	V, T, A, B, D	-	P, R	VIS, WIL
	Resistance	Power	Resistance	Level 1	Level 2	
Part Number	Value (Ohms)	Rating (W)	Tolerance (%)	(FRL) (&)	(FRL) (&)	Manufacturer
RNC90Y2K2600%&	2,260.0	0.3	V, T, A, B, D, F	-	P, R	VIS, WIL
RNC90Y2K2900%&	2,290.0	0.3	V, T, A, B, D	-	P, R	VIS, WIL
RNC90Y2K3200%&	2,320.0	0.3	V, T, A, B, D, F	-	P, R	VIS, WIL
RNC90Y2K3400%&	2,340.0	0.3	V, T, A, B, D	-	P, R	VIS, WIL
RNC90Y2K3700%&	2,370.0	0.3	V, T, A, B, D, F	-	P, R	VIS, WIL
RNC90Y2K4000%&	2,400.0	0.3	V, T, A, B, D	-	P, R	VIS, WIL
RNC90Y2K4300%&	2,430.0	0.3	V, T, A, B, D, F	-	P, R	VIS, WIL
RNC90Y2K4600%&	2,460.0	0.3	V, T, A, B, D	-	P, R	VIS, WIL
RNC90Y2K4900%&	2,490.0	0.3	V, T, A, B, D, F	-	P, R	VIS, WIL
RNC90Y2K5200%&	2,520.0	0.3	V, T, A, B, D	-	P, R	VIS, WIL
RNC90Y2K5500%&	2,550.0	0.3	V, T, A, B, D, F	-	P, R	VIS, WIL
RNC90Y2K5800%&	2,580.0	0.3	V, T, A, B, D	-	P, R	VIS, WIL
RNC90Y2K6100%&	2,610.0	0.3	V, T, A, B, D, F	-	P, R	VIS, WIL
RNC90Y2K6400%&	2,640.0	0.3	V, T, A, B, D	-	P, R	VIS, WIL
RNC90Y2K6700%&	2,670.0	0.3	V, T, A, B, D, F	-	P, R	VIS, WIL
RNC90Y2K7100%&	2,710.0	0.3	V, T, A, B, D	-	P, R	VIS, WIL
RNC90Y2K7400%&	2,740.0	0.3	V, T, A, B, D, F	-	P, R	VIS, WIL
RNC90Y2K7700%&	2,770.0	0.3	V, T, A, B, D	-	P, R	VIS, WIL
	Resistance	Power	Resistance	Level 1	Level 2	
Part Number	Value (Ohms)	Rating (W)	Tolerance (%)	(FRL) (&)	(FRL) (&)	Manufacturer
RNC90Y2K8000%&	2,800.0	0.3	V, T, A, B, D, F	-	P, R	VIS, WIL

RNC90Y2K8400%&	2,840.0	0.3	V, T, A, B, D	-	P, R	VIS, WIL
RNC90Y2K8700%&	2,870.0	0.3	V, T, A, B, D, F	-	P, R	VIS, WIL
RNC90Y2K9100%&	2,910.0	0.3	V, T, A, B, D	-	P, R	VIS, WIL
RNC90Y2K9400%&	2,940.0	0.3	V, T, A, B, D, F	-	P, R	VIS, WIL
RNC90Y2K9800%&	2,980.0	0.3	V, T, A, B, D	-	P, R	VIS, WIL
RNC90Y3K0100%&	3,010.0	0.3	V, T, A, B, D, F	-	P, R	VIS, WIL
RNC90Y3K0500%&	3,050.0	0.3	V, T, A, B, D	-	P, R	VIS, WIL
RNC90Y3K0900%&	3,090.0	0.3	V, T, A, B, D, F	-	P, R	VIS, WIL
RNC90Y3K1200%&	3,120.0	0.3	V, T, A, B, D	-	P, R	VIS, WIL
RNC90Y3K1600%&	3,160.0	0.3	V, T, A, B, D, F	-	P, R	VIS, WIL
RNC90Y3K2000%&	3,200.0	0.3	V, T, A, B, D	-	P, R	VIS, WIL
RNC90Y3K2400%&	3,240.0	0.3	V, T, A, B, D, F	-	P, R	VIS, WIL
RNC90Y3K2800%&	3,280.0	0.3	V, T, A, B, D	-	P, R	VIS, WIL
RNC90Y3K3200%&	3,320.0	0.3	V, T, A, B, D, F	-	P, R	VIS, WIL
RNC90Y3K3600%&	3,360.0	0.3	V, T, A, B, D	-	P, R	VIS, WIL
RNC90Y3K4000%&	3,400.0	0.3	V, T, A, B, D, F	-	P, R	VIS, WIL
RNC90Y3K4400%&	3,440.0	0.3	V, T, A, B, D	-	P, R	VIS, WIL
	Resistance	Power	Resistance	Level 1	Level 2	
Part Number	Value (Ohms)	Rating (W)	Tolerance (%)	(FRL) (&)	(FRL) (&)	Manufacturer
RNC90Y3K4800%&	3,480.0	0.3	V, T, A, B, D, F	-	P, R	VIS, WIL
RNC90Y3K5200%&	3,520.0	0.3	V, T, A, B, D	-	P, R	VIS, WIL
RNC90Y3K5700%&	3,570.0	0.3	V, T, A, B, D, F	-	P, R	VIS, WIL
RNC90Y3K6100%&	3,610.0	0.3	V, T, A, B, D	-	P, R	VIS, WIL
RNC90Y3K6500%&	3,650.0	0.3	V, T, A, B, D, F	-	P, R	VIS, WIL
RNC90Y3K700%&	3,700.0	0.3	V, T, A, B, D	-	P, R	VIS, WIL
RNC90Y3K7400%&	3,740.0	0.3	V, T, A, B, D, F	-	P, R	VIS, WIL
RNC90Y3K7900%&	3,790.0	0.3	V, T, A, B, D	-	P, R	VIS, WIL
RNC90Y3K8300%&	3,830.0	0.3	V, T, A, B, D, F	-	P, R	VIS, WIL
RNC90Y3K8800%&	3,880.0	0.3	V, T, A, B, D	-	P, R	VIS, WIL
RNC90Y3K9200%&	3,920.0	0.3	V, T, A, B, D, F	-	P, R	VIS, WIL
RNC90Y3K9700%&	3,970.0	0.3	V, T, A, B, D	-	P, R	VIS, WIL
RNC90Y4K0200%&	4,020.0	0.3	V, T, A, B, D, F	-	P, R	VIS, WIL
RNC90Y4K0700%&	4,070.0	0.3	V, T, A, B, D	-	P, R	VIS, WIL
RNC90Y4K1200%&	4,120.0	0.3	V, T, A, B, D, F	-	P, R	VIS, WIL
RNC90Y4K1700%&	4,170.0	0.3	V, T, A, B, D	-	P, R	VIS, WIL
RNC90Y4K2200%&	4,220.0	0.3	V, T, A, B, D, F	-	P, R	VIS, WIL
RNC90Y4K2700%&	4,270.0	0.3	V, T, A, B, D	-	P, R	VIS, WIL
	Resistance	Power	Resistance	Level 1	Level 2	
Part Number	Value (Ohms)	Rating (W)	Tolerance (%)	(FRL) (&)	(FRL) (&)	Manufacturer
RNC90Y4K3200%&	4,320.0	0.3	V, T, A, B, D, F	-	P, R	VIS, WIL
RNC90Y4K3700%&	4,370.0	0.3	V, T, A, B, D	-	P, R	VIS, WIL
RNC90Y4K4200%&	4,420.0	0.3	V, T, A, B, D, F	-	P, R	VIS, WIL
RNC90Y4K4800%&	4,480.0	0.3	V, T, A, B, D	-	P, R	VIS, WIL
RNC90Y4K5300%&	4,530.0	0.3	V, T, A, B, D, F	-	P, R	VIS, WIL
RNC90Y4K5900%&	4,590.0	0.3	V, T, A, B, D	-	P, R	VIS, WIL
RNC90Y4K6400%&	4,640.0	0.3	V, T, A, B, D, F	-	P, R	VIS, WIL
RNC90Y4K7000%&	4,700.0	0.3	V, T, A, B, D	-	P, R	VIS, WIL

RNC90Y4K7500%&	4,750.0	0.3	V, T, A, B, D, F	-	P, R	VIS, WIL
RNC90Y4K8100%&	4,810.0	0.3	V, T, A, B, D	-	P, R	VIS, WIL
RNC90Y4K8700%&	4,870.0	0.3	V, T, A, B, D, F	-	P, R	VIS, WIL
RNC90Y4K9300%&	4,930.0	0.3	V, T, A, B, D	-	P, R	VIS, WIL
RNC90Y4K9900%&	4,990.0	0.3	V, T, A, B, D, F	-	P, R	VIS, WIL
RNC90Y5K0500%&	5,050.0	0.3	V, T, A, B, D	-	P, R	VIS, WIL
RNC90Y5K1100%&	5,110.0	0.3	V, T, A, B, D, F	-	P, R	VIS, WIL
RNC90Y5K1700%&	5,170.0	0.3	V, T, A, B, D	-	P, R	VIS, WIL
RNC90Y5K2300%&	5,230.0	0.3	V, T, A, B, D, F	-	P, R	VIS, WIL
RNC90Y5K3000%&	5,300.0	0.3	V, T, A, B, D	-	P, R	VIS, WIL
	Resistance	Power	Resistance	Level 1	Level 2	
Part Number	Value (Ohms)	Rating (W)	Tolerance (%)	(FRL) (&)	(FRL) (&)	Manufacturer
RNC90Y5K3600%&	5,360.0	0.3	V, T, A, B, D, F	-	P, R	VIS, WIL
RNC90Y5K4200%&	5,420.0	0.3	V, T, A, B, D	-	P, R	VIS, WIL
RNC90Y5K4900%&	5,490.0	0.3	V, T, A, B, D, F	-	P, R	VIS, WIL
RNC90Y5K5600%&	5,560.0	0.3	V, T, A, B, D	-	P, R	VIS, WIL
RNC90Y5K6200%&	5,620.0	0.3	V, T, A, B, D, F	-	P, R	VIS, WIL
RNC90Y5K6900%&	5,690.0	0.3	V, T, A, B, D	-	P, R	VIS, WIL
RNC90Y5K7600%&	5,760.0	0.3	V, T, A, B, D, F	-	P, R	VIS, WIL
RNC90Y5K8300%&	5,830.0	0.3	V, T, A, B, D	-	P, R	VIS, WIL
RNC90Y5K9000%&	5,900.0	0.3	V, T, A, B, D, F	-	P, R	VIS, WIL
RNC90Y5K9700%&	5,970.0	0.3	V, T, A, B, D	-	P, R	VIS, WIL
RNC90Y6K0400%&	6,040.0	0.3	V, T, A, B, D, F	-	P, R	VIS, WIL
RNC90Y6K1200%&	6,120.0	0.3	V, T, A, B, D	-	P, R	VIS, WIL
RNC90Y6K1900%&	6,190.0	0.3	V, T, A, B, D, F	-	P, R	VIS, WIL
RNC90Y6K2600%&	6,260.0	0.3	V, T, A, B, D	-	P, R	VIS, WIL
RNC90Y6K3400%&	6,340.0	0.3	V, T, A, B, D, F	-	P, R	VIS, WIL
RNC90Y6K4200%&	6,420.0	0.3	V, T, A, B, D	-	P, R	VIS, WIL
RNC90Y6K4900%&	6,490.0	0.3	V, T, A, B, D, F	-	P, R	VIS, WIL
RNC90Y6K5700%&	6,570.0	0.3	V, T, A, B, D	-	P, R	VIS, WIL
	Resistance	Power	Resistance	Level 1	Level 2	
Part Number	Value (Ohms)	Rating (W)	Tolerance (%)	(FRL) (&)	(FRL) (&)	Manufacturer
RNC90Y6K6500%&	6,650.0	0.3	V, T, A, B, D, F	-	P, R	VIS, WIL
RNC90Y6K7300%&	6,730.0	0.3	V, T, A, B, D	-	P, R	VIS, WIL
RNC90Y6K8100%&	6,810.0	0.3	V, T, A, B, D, F	-	P, R	VIS, WIL
RNC90Y6K9000%&	6,900.0	0.3	V, T, A, B, D	-	P, R	VIS, WIL
RNC90Y6K9800%&	6,980.0	0.3	V, T, A, B, D, F	-	P, R	VIS, WIL
RNC90Y7K0600%&	7,060.0	0.3	V, T, A, B, D	-	P, R	VIS, WIL
RNC90Y7K1500%&	7,150.0	0.3	V, T, A, B, D, F	-	P, R	VIS, WIL
RNC90Y7K2300%&	7,230.0	0.3	V, T, A, B, D	-	P, R	VIS, WIL
RNC90Y7K3200%&	7,320.0	0.3	V, T, A, B, D, F	-	P, R	VIS, WIL
RNC90Y7K4100%&	7,410.0	0.3	V, T, A, B, D	-	P, R	VIS, WIL
RNC90Y7K5000%&	7,500.0	0.3	V, T, A, B, D, F	-	P, R	VIS, WIL
RNC90Y7K5900%&	7,590.0	0.3	V, T, A, B, D	-	P, R	VIS, WIL
RNC90Y7K6800%&	7,680.0	0.3	V, T, A, B, D, F	-	P, R	VIS, WIL
RNC90Y7K7700%&	7,770.0	0.3	V, T, A, B, D	-	P, R	VIS, WIL
RNC90Y7K8700%&	7,870.0	0.3	V, T, A, B, D, F	-	P, R	VIS, WIL

RNC90Y7K9600%&	7,960.0	0.3	V, T, A, B, D	-	P, R	VIS, WIL
RNC90Y8K0600%&	8,060.0	0.3	V, T, A, B, D, F	-	P, R	VIS, WIL
RNC90Y8K1600%&	8,160.0	0.3	V, T, A, B, D	-	P, R	VIS, WIL
	Resistance	Power	Resistance	Level 1	Level 2	
Part Number	Value (Ohms)	Rating (W)	Tolerance (%)	(FRL) (&)	(FRL) (&)	Manufacturer
RNC90Y8K2500%&	8,250.0	0.3	V, T, A, B, D, F	-	P, R	VIS, WIL
RNC90Y8K3500%&	8,350.0	0.3	V, T, A, B, D	-	P, R	VIS, WIL
RNC90Y8K4500%&	8,450.0	0.3	V, T, A, B, D, F	-	P, R	VIS, WIL
RNC90Y8K5600%&	8,560.0	0.3	V, T, A, B, D	-	P, R	VIS, WIL
RNC90Y8K6600%&	8,660.0	0.3	V, T, A, B, D, F	-	P, R	VIS, WIL
RNC90Y8K7600%&	8,760.0	0.3	V, T, A, B, D	-	P, R	VIS, WIL
RNC90Y8K8700%&	8,870.0	0.3	V, T, A, B, D, F	-	P, R	VIS, WIL
RNC90Y8K9800%&	8,980.0	0.3	V, T, A, B, D	-	P, R	VIS, WIL
RNC90Y9K0900%&	9,090.0	0.3	V, T, A, B, D, F	-	P, R	VIS, WIL
RNC90Y9K2000%&	9,200.0	0.3	V, T, A, B, D	-	P, R	VIS, WIL
RNC90Y9K3100%&	9,310.0	0.3	V, T, A, B, D, F	-	P, R	VIS, WIL
RNC90Y9K4200%&	9,420.0	0.3	V, T, A, B, D	-	P, R	VIS, WIL
RNC90Y9K5300%&	9,530.0	0.3	V, T, A, B, D, F	-	P, R	VIS, WIL
RNC90Y9K6500%&	9,650.0	0.3	V, T, A, B, D	-	P, R	VIS, WIL
RNC90Y9K7600%&	9,760.0	0.3	V, T, A, B, D, F	-	P, R	VIS, WIL
RNC90Y9K8800%&	9,880.0	0.3	V, T, A, B, D	-	P, R	VIS, WIL

RNC90Y Film Resistors: 10,000 Ohms through 98,800 Ohms

	Resistance	Power	Resistance	Level 1	Level 2	
Part Number	Value (Ohms)	Rating (W)	Tolerance (%)	(FRL) (&)	(FRL) (&)	Manufacturer
RNC90Y10K000%&	10,000	0.3	V, T, A, B, D, F	-	P, R	VIS, WIL
RNC90Y10K100%&	10,100	0.3	V, T, A, B, D	-	P, R	VIS, WIL
RNC90Y10K200%&	10,200	0.3	V, T, A, B, D, F	-	P, R	VIS, WIL
RNC90Y10K400%&	10,400	0.3	V, T, A, B, D	-	P, R	VIS, WIL
RNC90Y10K500%&	10,500	0.3	V, T, A, B, D, F	-	P, R	VIS, WIL
RNC90Y10K600%&	10,600	0.3	V, T, A, B, D	-	P, R	VIS, WIL
RNC90Y10K700%&	10,700	0.3	V, T, A, B, D, F	-	P, R	VIS, WIL
RNC90Y10K900%&	10,900	0.3	V, T, A, B, D	-	P, R	VIS, WIL
RNC90Y11K000%&	11,000	0.3	V, T, A, B, D, F	-	P, R	VIS, WIL
RNC90Y11K100%&	11,100	0.3	V, T, A, B, D	-	P, R	VIS, WIL
RNC90Y11K300%&	11,300	0.3	V, T, A, B, D, F	-	P, R	VIS, WIL
RNC90Y11K400%&	11,400	0.3	V, T, A, B, D	-	P, R	VIS, WIL
RNC90Y11K500%&	11,500	0.3	V, T, A, B, D, F	-	P, R	VIS, WIL
RNC90Y11K700%&	11,700	0.3	V, T, A, B, D	-	P, R	VIS, WIL
	Resistance	Power	Resistance	Level 1	Level 2	
Part Number	Value (Ohms)	Rating (W)	Tolerance (%)	(FRL) (&)	(FRL) (&)	Manufacturer
RNC90Y11K800%&	11,800	0.3	V, T, A, B, D, F	-	P, R	VIS, WIL
RNC90Y12K000%&	12,000	0.3	V, T, A, B, D	-	P, R	VIS, WIL
RNC90Y12K100%&	12,100	0.3	V, T, A, B, D, F	-	P, R	VIS, WIL

RNC90Y12K300%&	12,300	0.3	V, T, A, B, D	-	P, R	VIS, WIL
RNC90Y12K400%&	12,400	0.3	V, T, A, B, D, F	-	P, R	VIS, WIL
RNC90Y12K600%&	12,600	0.3	V, T, A, B, D	-	P, R	VIS, WIL
RNC90Y12K700%&	12,700	0.3	V, T, A, B, D, F	-	P, R	VIS, WIL
RNC90Y12K900%&	12,900	0.3	V, T, A, B, D	-	P, R	VIS, WIL
RNC90Y13K000%&	13,000	0.3	V, T, A, B, D, F	-	P, R	VIS, WIL
RNC90Y13K200%&	13,200	0.3	V, T, A, B, D	-	P, R	VIS, WIL
RNC90Y13K300%&	13,300	0.3	V, T, A, B, D, F	-	P, R	VIS, WIL
RNC90Y13K500%&	13,500	0.3	V, T, A, B, D	-	P, R	VIS, WIL
RNC90Y13K700%&	13,700	0.3	V, T, A, B, D, F	-	P, R	VIS, WIL
RNC90Y13K800%&	13,800	0.3	V, T, A, B, D	-	P, R	VIS, WIL
RNC90Y14K000%&	14,000	0.3	V, T, A, B, D, F	-	P, R	VIS, WIL
RNC90Y14K200%&	14,200	0.3	V, T, A, B, D	-	P, R	VIS, WIL
RNC90Y14K300%&	14,300	0.3	V, T, A, B, D, F	-	P, R	VIS, WIL
RNC90Y14K500%&	14,500	0.3	V, T, A, B, D	-	P, R	VIS, WIL
	Resistance	Power	Resistance	Level 1	Level 2	
Part Number	Value (Ohms)	Rating (W)	Tolerance (%)	(FRL) (&)	(FRL) (&)	Manufacturer
RNC90Y14K700%&	14,700	0.3	V, T, A, B, D, F	-	P, R	VIS, WIL
RNC90Y14K900%&	14,900	0.3	V, T, A, B, D	-	P, R	VIS, WIL
RNC90Y15K000%&	15,000	0.3	V, T, A, B, D, F	-	P, R	VIS, WIL
RNC90Y15K200%&	15,200	0.3	V, T, A, B, D	-	P, R	VIS, WIL
RNC90Y15K400%&	15,400	0.3	V, T, A, B, D, F	-	P, R	VIS, WIL
RNC90Y15K600%&	15,600	0.3	V, T, A, B, D	-	P, R	VIS, WIL
RNC90Y15K800%&	15,800	0.3	V, T, A, B, D, F	-	P, R	VIS, WIL
RNC90Y16K000%&	16,000	0.3	V, T, A, B, D	-	P, R	VIS, WIL
RNC90Y16K200%&	16,200	0.3	V, T, A, B, D, F	-	P, R	VIS, WIL
RNC90Y16K400%&	16,400	0.3	V, T, A, B, D	-	P, R	VIS, WIL
RNC90Y16K500%&	16,500	0.3	V, T, A, B, D, F	-	P, R	VIS, WIL
RNC90Y16K700%&	16,700	0.3	V, T, A, B, D	-	P, R	VIS, WIL
RNC90Y16K900%&	16,900	0.3	V, T, A, B, D, F	-	P, R	VIS, WIL
RNC90Y17K200%&	17,200	0.3	V, T, A, B, D	-	P, R	VIS, WIL
RNC90Y17K400%&	17,400	0.3	V, T, A, B, D, F	-	P, R	VIS, WIL
RNC90Y17K600%&	17,600	0.3	V, T, A, B, D	-	P, R	VIS, WIL
RNC90Y17K800%&	17,800	0.3	V, T, A, B, D, F	-	P, R	VIS, WIL
RNC90Y18K000%&	18,000	0.3	V, T, A, B, D	-	P, R	VIS, WIL
	Resistance	Power	Resistance	Level 1	Level 2	
Part Number	Value (Ohms)	Rating (W)	Tolerance (%)	(FRL) (&)	(FRL) (&)	Manufacturer
RNC90Y18K200%&	18,200	0.3	V, T, A, B, D, F	-	P, R	VIS, WIL
RNC90Y18K400%&	18,400	0.3	V, T, A, B, D	-	P, R	VIS, WIL
RNC90Y18K700%&	18,700	0.3	V, T, A, B, D, F	-	P, R	VIS, WIL
RNC90Y18K900%&	18,900	0.3	V, T, A, B, D	-	P, R	VIS, WIL
RNC90Y19K100%&	19,100	0.3	V, T, A, B, D, F	-	P, R	VIS, WIL
RNC90Y19K300%&	19,300	0.3	V, T, A, B, D	-	P, R	VIS, WIL
RNC90Y19K600%&	19,600	0.3	V, T, A, B, D, F	-	P, R	VIS, WIL
RNC90Y19K800%&	19,800	0.3	V, T, A, B, D	-	P, R	VIS, WIL
RNC90Y20K000%&	20,000	0.3	V, T, A, B, D, F	-	P, R	VIS, WIL
RNC90Y20K300%&	20,300	0.3	V, T, A, B, D	-	P, R	VIS, WIL

RNC90Y20K500%&	20,500	0.3	V, T, A, B, D, F	-	P, R	VIS, WIL
RNC90Y20K800%&	20,800	0.3	V, T, A, B, D	-	P, R	VIS, WIL
RNC90Y21K000%&	21,000	0.3	V, T, A, B, D, F	-	P, R	VIS, WIL
RNC90Y21K300%&	21,300	0.3	V, T, A, B, D	-	P, R	VIS, WIL
RNC90Y21K500%&	21,500	0.3	V, T, A, B, D, F	-	P, R	VIS, WIL
RNC90Y21K800%&	21,800	0.3	V, T, A, B, D	-	P, R	VIS, WIL
RNC90Y22K100%&	22,100	0.3	V, T, A, B, D, F	-	P, R	VIS, WIL
RNC90Y22K300%&	22,300	0.3	V, T, A, B, D	-	P, R	VIS, WIL
	Resistance	Power	Resistance	Level 1	Level 2	
Part Number	Value (Ohms)	Rating (W)	Tolerance (%)	(FRL) (&)	(FRL) (&)	Manufacturer
RNC90Y22K600%&	22,600	0.3	V, T, A, B, D, F	-	P, R	VIS, WIL
RNC90Y22K900%&	22,900	0.3	V, T, A, B, D	-	P, R	VIS, WIL
RNC90Y23K200%&	23,200	0.3	V, T, A, B, D, F	-	P, R	VIS, WIL
RNC90Y23K400%&	23,400	0.3	V, T, A, B, D	-	P, R	VIS, WIL
RNC90Y23K700%&	23,700	0.3	V, T, A, B, D, F	-	P, R	VIS, WIL
RNC90Y24K000%&	24,000	0.3	V, T, A, B, D	-	P, R	VIS, WIL
RNC90Y24K300%&	24,300	0.3	V, T, A, B, D, F	-	P, R	VIS, WIL
RNC90Y24K600%&	24,600	0.3	V, T, A, B, D	-	P, R	VIS, WIL
RNC90Y24K900%&	24,900	0.3	V, T, A, B, D, F	-	P, R	VIS, WIL
RNC90Y25K200%&	25,200	0.3	V, T, A, B, D	-	P, R	VIS, WIL
RNC90Y25K500%&	25,500	0.3	V, T, A, B, D, F	-	P, R	VIS, WIL
RNC90Y25K800%&	25,800	0.3	V, T, A, B, D	-	P, R	VIS, WIL
RNC90Y26K100%&	26,100	0.3	V, T, A, B, D, F	-	P, R	VIS, WIL
RNC90Y26K400%&	26,400	0.3	V, T, A, B, D	-	P, R	VIS, WIL
RNC90Y26K700%&	26,700	0.3	V, T, A, B, D, F	-	P, R	VIS, WIL
RNC90Y27K100%&	27,100	0.3	V, T, A, B, D	-	P, R	VIS, WIL
RNC90Y27K400%&	27,400	0.3	V, T, A, B, D, F	-	P, R	VIS, WIL
RNC90Y27K700%&	27,700	0.3	V, T, A, B, D	-	P, R	VIS, WIL
	Resistance	Power	Resistance	Level 1	Level 2	
Part Number	Value (Ohms)	Rating (W)	Tolerance (%)	(FRL) (&)	(FRL) (&)	Manufacturer
RNC90Y28K000%&	28,000	0.3	V, T, A, B, D, F	-	P, R	VIS, WIL
RNC90Y28K400%&	28,400	0.3	V, T, A, B, D	-	P, R	VIS, WIL
RNC90Y28K700%&	28,700	0.3	V, T, A, B, D, F	-	P, R	VIS, WIL
RNC90Y29K100%&	29,100	0.3	V, T, A, B, D	-	P, R	VIS, WIL
RNC90Y29K400%&	29,400	0.3	V, T, A, B, D, F	-	P, R	VIS, WIL
RNC90Y29K800%&	29,800	0.3	V, T, A, B, D	-	P, R	VIS, WIL
RNC90Y30K100%&	30,100	0.3	V, T, A, B, D, F	-	P, R	VIS, WIL
RNC90Y30K500%&	30,500	0.3	V, T, A, B, D	-	P, R	VIS, WIL
RNC90Y30K900%&	30,900	0.3	V, T, A, B, D, F	-	P, R	VIS, WIL
RNC90Y31K200%&	31,200	0.3	V, T, A, B, D	-	P, R	VIS, WIL
RNC90Y31K600%&	31,600	0.3	V, T, A, B, D, F	-	P, R	VIS, WIL
RNC90Y32K000%&	32,000	0.3	V, T, A, B, D	-	P, R	VIS, WIL
RNC90Y32K400%&	32,400	0.3	V, T, A, B, D, F	-	P, R	VIS, WIL
RNC90Y32K800%&	32,800	0.3	V, T, A, B, D	-	P, R	VIS, WIL
RNC90Y33K200%&	33,200	0.3	V, T, A, B, D, F	-	P, R	VIS, WIL
RNC90Y33K600%&	33,600	0.3	V, T, A, B, D	-	P, R	VIS, WIL
RNC90Y34K000%&	34,000	0.3	V, T, A, B, D, F	-	P, R	VIS, WIL

RNC90Y34K400%&	34,400	0.3	V, T, A, B, D	-	P, R	VIS, WIL
	Resistance	Power	Resistance	Level 1	Level 2	
Part Number	Value (Ohms)	Rating (W)	Tolerance (%)	(FRL) (&)	(FRL) (&)	Manufacturer
RNC90Y34K800%&	34,800	0.3	V, T, A, B, D, F	-	P, R	VIS, WIL
RNC90Y35K200%&	35,200	0.3	V, T, A, B, D	-	P, R	VIS, WIL
RNC90Y35K700%&	35,700	0.3	V, T, A, B, D, F	-	P, R	VIS, WIL
RNC90Y36K100%&	36,100	0.3	V, T, A, B, D	-	P, R	VIS, WIL
RNC90Y36K500%&	36,500	0.3	V, T, A, B, D, F	-	P, R	VIS, WIL
RNC90Y37K000%&	37,000	0.3	V, T, A, B, D	-	P, R	VIS, WIL
RNC90Y37K400%&	37,400	0.3	V, T, A, B, D, F	-	P, R	VIS, WIL
RNC90Y37K900%&	37,900	0.3	V, T, A, B, D	-	P, R	VIS, WIL
RNC90Y38K300%&	38,300	0.3	V, T, A, B, D, F	-	P, R	VIS, WIL
RNC90Y38K800%&	38,800	0.3	V, T, A, B, D	-	P, R	VIS, WIL
RNC90Y39K200%&	39,200	0.3	V, T, A, B, D, F	-	P, R	VIS, WIL
RNC90Y39K700%&	39,700	0.3	V, T, A, B, D	-	P, R	VIS, WIL
RNC90Y40K200%&	40,200	0.3	V, T, A, B, D, F	-	P, R	VIS, WIL
RNC90Y40K700%&	40,700	0.3	V, T, A, B, D	-	P, R	VIS, WIL
RNC90Y41K200%&	41,200	0.3	V, T, A, B, D, F	-	P, R	VIS, WIL
RNC90Y41K700%&	41,700	0.3	V, T, A, B, D	-	P, R	VIS, WIL
RNC90Y42K200%&	42,200	0.3	V, T, A, B, D, F	-	P, R	VIS, WIL
RNC90Y42K700%&	42,700	0.3	V, T, A, B, D	-	P, R	VIS, WIL
	Resistance	Power	Resistance	Level 1	Level 2	
Part Number	Value (Ohms)	Rating (W)	Tolerance (%)	(FRL) (&)	(FRL) (&)	Manufacturer
RNC90Y43K200%&	43,200	0.3	V, T, A, B, D, F	-	P, R	VIS, WIL
RNC90Y43K700%&	43,700	0.3	V, T, A, B, D	-	P, R	VIS, WIL
RNC90Y44K200%&	44,200	0.3	V, T, A, B, D, F	-	P, R	VIS, WIL
RNC90Y44K800%&	44,800	0.3	V, T, A, B, D	-	P, R	VIS, WIL
RNC90Y45K300%&	45,300	0.3	V, T, A, B, D, F	-	P, R	VIS, WIL
RNC90Y45K900%&	45,900	0.3	V, T, A, B, D	-	P, R	VIS, WIL
RNC90Y46K400%&	46,400	0.3	V, T, A, B, D, F	-	P, R	VIS, WIL
RNC90Y47K000%&	47,000	0.3	V, T, A, B, D	-	P, R	VIS, WIL
RNC90Y47K500%&	47,500	0.3	V, T, A, B, D, F	-	P, R	VIS, WIL
RNC90Y48K100%&	48,100	0.3	V, T, A, B, D	-	P, R	VIS, WIL
RNC90Y48K700%&	48,700	0.3	V, T, A, B, D, F	-	P, R	VIS, WIL
RNC90Y49K300%&	49,300	0.3	V, T, A, B, D	-	P, R	VIS, WIL
RNC90Y49K900%&	49,900	0.3	V, T, A, B, D, F	-	P, R	VIS, WIL
RNC90Y50K500%&	50,500	0.3	V, T, A, B, D	-	P, R	VIS, WIL
RNC90Y51K100%&	51,100	0.3	V, T, A, B, D, F	-	P, R	VIS, WIL
RNC90Y51K700%&	51,700	0.3	V, T, A, B, D	-	P, R	VIS, WIL
RNC90Y52K300%&	52,300	0.3	V, T, A, B, D, F	-	P, R	VIS, WIL
RNC90Y53K000%&	53,000	0.3	V, T, A, B, D	-	P, R	VIS, WIL
	Resistance	Power	Resistance	Level 1	Level 2	
Part Number	Value (Ohms)	Rating (W)	Tolerance (%)	(FRL) (&)	(FRL) (&)	Manufacturer
RNC90Y53K600%&	53,600	0.3	V, T, A, B, D, F	-	P, R	VIS, WIL
RNC90Y54K200%&	54,200	0.3	V, T, A, B, D	-	P, R	VIS, WIL
RNC90Y54K900%&	54,900	0.3	V, T, A, B, D, F	-	P, R	VIS, WIL
RNC90Y55K600%&	55,600	0.3	V, T, A, B, D	-	P, R	VIS, WIL

RNC90Y56K200%&	56,200	0.3	V, T, A, B, D, F	-	P, R	VIS, WIL
RNC90Y56K900%&	56,900	0.3	V, T, A, B, D	-	P, R	VIS, WIL
RNC90Y57K600%&	57,600	0.3	V, T, A, B, D, F	-	P, R	VIS, WIL
RNC90Y58K300%&	58,300	0.3	V, T, A, B, D	-	P, R	VIS, WIL
RNC90Y59K000%&	59,000	0.3	V, T, A, B, D, F	-	P, R	VIS, WIL
RNC90Y59K700%&	59,700	0.3	V, T, A, B, D	-	P, R	VIS, WIL
RNC90Y60K400%&	60,400	0.3	V, T, A, B, D, F	-	P, R	VIS, WIL
RNC90Y61K200%&	61,200	0.3	V, T, A, B, D	-	P, R	VIS, WIL
RNC90Y61K900%&	61,900	0.3	V, T, A, B, D, F	-	P, R	VIS, WIL
RNC90Y62K600%&	62,600	0.3	V, T, A, B, D	-	P, R	VIS, WIL
RNC90Y63K400%&	63,400	0.3	V, T, A, B, D, F	-	P, R	VIS, WIL
RNC90Y64K200%&	64,200	0.3	V, T, A, B, D	-	P, R	VIS, WIL
RNC90Y64K900%&	64,900	0.3	V, T, A, B, D, F	-	P, R	VIS, WIL
RNC90Y65K700%&	65,700	0.3	V, T, A, B, D	-	P, R	VIS, WIL
	Resistance	Power	Resistance	Level 1	Level 2	
Part Number	Value (Ohms)	Rating (W)	Tolerance (%)	(FRL) (&)	(FRL) (&)	Manufacturer
RNC90Y66K500%&	66,500	0.3	V, T, A, B, D, F	-	P, R	VIS, WIL
RNC90Y67K300%&	67,300	0.3	V, T, A, B, D	-	P, R	VIS, WIL
RNC90Y68K100%&	68,100	0.3	V, T, A, B, D, F	-	P, R	VIS, WIL
RNC90Y69K000%&	69,000	0.3	V, T, A, B, D	-	P, R	VIS, WIL
RNC90Y69K800%&	69,800	0.3	V, T, A, B, D, F	-	P, R	VIS, WIL
RNC90Y70K600%&	70,600	0.3	V, T, A, B, D	-	P, R	VIS, WIL
RNC90Y71K500%&	71,500	0.3	V, T, A, B, D, F	-	P, R	VIS, WIL
RNC90Y72K300%&	72,300	0.3	V, T, A, B, D	-	P, R	VIS, WIL
RNC90Y73K200%&	73,200	0.3	V, T, A, B, D, F	-	P, R	VIS, WIL
RNC90Y74K100%&	74,100	0.3	V, T, A, B, D	-	P, R	VIS, WIL
RNC90Y75K000%&	75,000	0.3	V, T, A, B, D, F	-	P, R	VIS, WIL
RNC90Y75K900%&	75,900	0.3	V, T, A, B, D	-	P, R	VIS, WIL
RNC90Y76K800%&	76,800	0.3	V, T, A, B, D, F	-	P, R	VIS, WIL
RNC90Y77K700%&	77,700	0.3	V, T, A, B, D	-	P, R	VIS, WIL
RNC90Y78K700%&	78,700	0.3	V, T, A, B, D, F	-	P, R	VIS, WIL
RNC90Y79K600%&	79,600	0.3	V, T, A, B, D	-	P, R	VIS, WIL
RNC90Y80K600%&	80,600	0.3	V, T, A, B, D, F	-	P, R	VIS, WIL
RNC90Y81K600%&	81,600	0.3	V, T, A, B, D	-	P, R	VIS, WIL
	Resistance	Power	Resistance	Level 1	Level 2	
Part Number	Value (Ohms)	Rating (W)	Tolerance (%)	(FRL) (&)	(FRL) (&)	Manufacturer
RNC90Y82K500%&	82,500	0.3	V, T, A, B, D, F	-	P, R	VIS, WIL
RNC90Y83K500%&	83,500	0.3	V, T, A, B, D	-	P, R	VIS, WIL
RNC90Y84K500%&	84,500	0.3	V, T, A, B, D, F	-	P, R	VIS, WIL
RNC90Y85K600%&	85,600	0.3	V, T, A, B, D	-	P, R	VIS, WIL
RNC90Y86K600%&	86,600	0.3	V, T, A, B, D, F	-	P, R	VIS, WIL
RNC90Y87K600%&	87,600	0.3	V, T, A, B, D	-	P, R	VIS, WIL
RNC90Y88K700%&	88,700	0.3	V, T, A, B, D, F	-	P, R	VIS, WIL
RNC90Y89K800%&	89,800	0.3	V, T, A, B, D	-	P, R	VIS, WIL
RNC90Y90K900%&	90,900	0.3	V, T, A, B, D, F	-	P, R	VIS, WIL
RNC90Y92K000%&	92,000	0.3	V, T, A, B, D	-	P, R	VIS, WIL
RNC90Y93K100%&	93,100	0.3	V, T, A, B, D, F	-	P, R	VIS, WIL

RNC90Y94K200%&	94,200	0.3	V, T, A, B, D	-	P, R	VIS, WIL
RNC90Y95K300%&	95,300	0.3	V, T, A, B, D, F	-	P, R	VIS, WIL
RNC90Y96K500%&	96,500	0.3	V, T, A, B, D	-	P, R	VIS, WIL
RNC90Y97K600%&	97,600	0.3	V, T, A, B, D, F	-	P, R	VIS, WIL
RNC90Y98K800%&	98,800	0.3	V, T, A, B, D	-	P, R	VIS, WIL
	Resistance	Power	Resistance	Level 1	Level 2	
Part Number	Value (Ohms)	Rating (W)	Tolerance (%)	(FRL) (&)	(FRL) (&)	Manufacturer

RNC90Y Film Resistors: 100,000 Ohms through 200,000 Ohms

	Resistance	Power	Resistance	Level 1	Level 2	
Part Number	Value (Ohms)	Rating (W)	Tolerance (%)	(FRL) (&)	(FRL) (&)	Manufacturer
RNC90Y100K00%&	100,000	0.3	V, T, A, B, D, F	-	P, R	VIS, WIL
RNC90Y101K00%&	101,000	0.3	V, T, A, B, D	-	P, R	-
RNC90Y102K00%&	102,000	0.3	V, T, A, B, D, F	-	P, R	-
RNC90Y104K00%&	104,000	0.3	V, T, A, B, D	-	P, R	-
RNC90Y105K00%&	105,000	0.3	V, T, A, B, D, F	-	P, R	-
RNC90Y106K00%&	106,000	0.3	V, T, A, B, D	-	P, R	-
RNC90Y107K00%&	107,000	0.3	V, T, A, B, D, F	-	P, R	-
RNC90Y109K00%&	109,000	0.3	V, T, A, B, D	-	P, R	-
RNC90Y110K00%&	110,000	0.3	V, T, A, B, D, F	-	P, R	-
RNC90Y111K00%&	111,000	0.3	V, T, A, B, D	-	P, R	-
RNC90Y113K00%&	113,000	0.3	V, T, A, B, D, F	-	P, R	-
RNC90Y114K00%&	114,000	0.3	V, T, A, B, D	-	P, R	-
RNC90Y115K00%&	115,000	0.3	V, T, A, B, D, F	-	P, R	-
RNC90Y117K00%&	117,000	0.3	V, T, A, B, D	-	P, R	-
	Re-i-tance	Power	Re-i-tance	Level 1	Level 2	
Part Number	Value (Ohm-)	Rating (W)	Tolerance (%)	(FRL) (&)	(FRL) (&)	Manufacturer
RNC90Y118K00%&	118,000	0.3	V, T, A, B, D, F	-	P, R	-
RNC90Y120K00%&	120,000	0.3	V, T, A, B, D	-	P, R	-
RNC90Y121K00%&	121,000	0.3	V, T, A, B, D, F	-	P, R	-
RNC90Y123K00%&	123,000	0.3	V, T, A, B, D	-	P, R	-
RNC90Y124K00%&	124,000	0.3	V, T, A, B, D, F	-	P, R	-
RNC90Y126K00%&	126,000	0.3	V, T, A, B, D	-	P, R	-
RNC90Y127K00%&	127,000	0.3	V, T, A, B, D, F	-	P, R	-
RNC90Y129K00%&	129,000	0.3	V, T, A, B, D	-	P, R	-
RNC90Y130K00%&	130,000	0.3	V, T, A, B, D, F	-	P, R	-
RNC90Y132K00%&	132,000	0.3	V, T, A, B, D	-	P, R	-
RNC90Y133K00%&	133,000	0.3	V, T, A, B, D, F	-	P, R	-
RNC90Y135K00%&	135,000	0.3	V, T, A, B, D	-	P, R	-
RNC90Y137K00%&	137,000	0.3	V, T, A, B, D, F	-	P, R	-
RNC90Y138K00%&	138,000	0.3	V, T, A, B, D	-	P, R	-
RNC90Y140K00%&	140,000	0.3	V, T, A, B, D, F	-	P, R	-
RNC90Y142K00%&	142,000	0.3	V, T, A, B, D	-	P, R	-
RNC90Y143K00%&	143,000	0.3	V, T, A, B, D, F	-	P, R	-

RNC90Y145K00%&	145,000	0.3	V, T, A, B, D	-	P, R	-
	Re-i-tance	Power	Re-i-tance	Level 1	Level 2	
Part Number	Value (Ohm-)	Rating (W)	Tolerance (%)	(FRL) (&)	(FRL) (&)	Manufacturer
RNC90Y147K00%&	147,000	0.3	V, T, A, B, D, F	-	P, R	-
RNC90Y149K00%&	149,000	0.3	V, T, A, B, D	-	P, R	-
RNC90Y150K00%&	150,000	0.3	V, T, A, B, D, F	-	P, R	-
RNC90Y152K00%&	152,000	0.3	V, T, A, B, D	-	P, R	-
RNC90Y154K00%&	154,000	0.3	V, T, A, B, D, F	-	P, R	-
RNC90Y156K00%&	156,000	0.3	V, T, A, B, D	-	P, R	-
RNC90Y158K00%&	158,000	0.3	V, T, A, B, D, F	-	P, R	-
RNC90Y160K00%&	160,000	0.3	V, T, A, B, D	-	P, R	-
RNC90Y162K00%&	162,000	0.3	V, T, A, B, D, F	-	P, R	-
RNC90Y164K00%&	164,000	0.3	V, T, A, B, D	-	P, R	-
RNC90Y165K00%&	165,000	0.3	V, T, A, B, D, F	-	P, R	-
RNC90Y167K00%&	167,000	0.3	V, T, A, B, D	-	P, R	-
RNC90Y169K00%&	169,000	0.3	V, T, A, B, D, F	-	P, R	-
RNC90Y172K00%&	172,000	0.3	V, T, A, B, D	-	P, R	-
RNC90Y174K00%&	174,000	0.3	V, T, A, B, D, F	-	P, R	-
RNC90Y176K00%&	176,000	0.3	V, T, A, B, D	-	P, R	-
RNC90Y178K00%&	178,000	0.3	V, T, A, B, D, F	-	P, R	-
RNC90Y180K00%&	180,000	0.3	V, T, A, B, D	-	P, R	-
	Re-i-tance	Power	Re-i-tance	Level 1	Level 2	
Part Number	Value (Ohm-)	Rating (W)	Tolerance (%)	(FRL) (&)	(FRL) (&)	Manufacturer
RNC90Y182K00%&	182,000	0.3	V, T, A, B, D, F	-	P, R	-
RNC90Y184K00%&	184,000	0.3	V, T, A, B, D	-	P, R	-
RNC90Y187K00%&	187,000	0.3	V, T, A, B, D, F	-	P, R	-
RNC90Y189K00%&	189,000	0.3	V, T, A, B, D	-	P, R	-
RNC90Y191K00%&	191,000	0.3	V, T, A, B, D, F	-	P, R	-
RNC90Y193K00%&	193,000	0.3	V, T, A, B, D	-	P, R	-
RNC90Y196K00%&	196,000	0.3	V, T, A, B, D, F	-	P, R	-
RNC90Y198K00%&	198,000	0.3	V, T, A, B, D	-	P, R	-
RNC90Y200K00%&	200,000	0.3	V, T, A, B, D, F	-	P, R	-
	Re-i-tance	Power	Re-i-tance	Level 1	Level 2	
Part Number	Value (Ohm-)	Rating (W)	Tolerance (%)	(FRL) (&)	(FRL) (&)	Manufacturer

Physical Dimensions Table

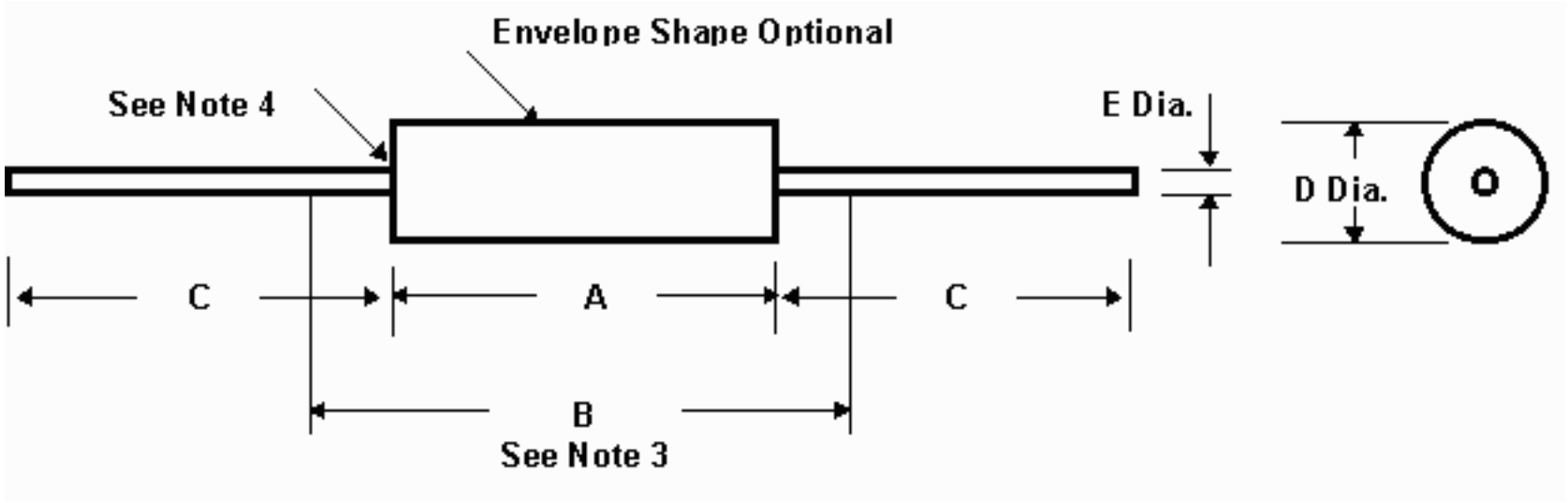

Resistor Style	A	B (max)	C	D	E
RN_50	0.180+/-0.020 (for char. C & E) 0.150+/-0.020 (for char. H,J,K)	0.225	1.250+/-0.266	0.065+/-0.015	0.016+/-0.002
RN_55	0.250+0.031, -0.046	0.379	1.500+/-0.125	0.109+/-0.031	0.025+/-0.002
RN_60	0.375+0.062, -0.115	0.561	1.500+/-0.125	0.125+/-0.040	0.025+/-0.002
RN_65	0.625+0.031, -0.094	0.780	1.500+/-0.125	0.188+0.062, -0.031	0.025+/-0.002
RN_70	0.750+0.125, -0.250	0.939	1.500+/-0.125	0.250+0.078, -0.090	0.032+/-0.002
Click Here for RNC90					

NOTES:

1. Dimensions are in inches.
2. Metric equivalents are given for general information only.
3. The maximum length is "clean lead" to "clean lead".
4. The end of the body shall be the point at which the body diameter equals the nearest drill size larger than 250% of the nominal lead diameter.
5. Lead length for new design and tape and reel packaging shall be 1.00" + 0.625", -0.0".
6. Lead concentric tolerance is to be measured at the point of lead egress from the resistor body.

APPLICATION NOTES FOR MIL-PRF-55342

1) All combinations of termination type, characteristic, tolerance, and failure rate may not be available. Consult the latest Qualified Products List (QPL-55342) for availability.

2) Space Level Product: MIL-PRF-55342 includes a Space Level Quality option designated by the letter "T" in the failure rate level character of the part number. "T" level product receives additional screening and inspection at the manufacturer prior to delivery. This inspection includes additional testing beyond the basic requirements, specifically

Power Conditioning

In addition, suppliers are required to maintain "S" failure rate level, qualify product through 100 thermal cycles and certify that their product meets the outgassing requirements of NASA Publication 1124. Consult with the supplier to determine their current "T" level qualification status.

3) Resistors may be mounted individually on a test board, fiberglass base, and connected to conductor areas by means of solder preforms, conductive cement, or wire bonding. Users are cautioned that the substrate and chip component must have compatible temperature coefficients of expansion to reduce the strain level imposed on the solder connections. They may also be directly connected to other components on the same test board by means of wire bonding using the test board as a base or carrier for the resistor.

4) Stacking of resistors is discouraged since experience indicates that failure may occur due to electrolytic action in the bonding adhesive. This action occurs from the increase in temperature caused by stacking in conjunction with the operating voltage across the resistor. The bonding adhesive at the resistor chip interface chemically reacts with the active resistor material changing the noise and resistance values and eventually the resistor will open. If stacking resistors, care should be taken to compensate for the lower heat dissipation capabilities by derating the wattage rating.

5) Close tolerance resistors (i.e., +/-0.1%) should be mounted on a test board by a method which produces the least heating effect over a short period of time to avoid permanent changes in resistance.

6) It is recommended that the film side of the resistors be mounted up when they are placed onto printed circuit boards. This is due to the effect of thermal stressing on epoxies used to hold them in place when mounted on the bottom of printed circuit boards. Resistor films can be torn from the substrate during thermal cycling, substantially altering the value of the resistor.

7) Electrostatic charge effects. Under relatively low humidity conditions, some types of film resistors, particularly those with small dimensions and high sheet resistivity materials, are prone to sudden significant changes in resistance (usually reductions in value) and to changes in temperature coefficient of resistance as a result of discharge of static charges built up on associated objects during handling, packaging, or shipping. Substitution of more suitable implements and materials can help minimize this problem. For example, use of cotton gloves, static eliminator devices, air humidifiers, and operator and workbench grounding systems can reduce static buildup during handling. Means of alleviating static problems during shipment include elimination of loose packaging of resistors and use of metal foil (conductive) and static dissipation packaging materials. Direct shipments to the government is controlled by MIL-DTL-39032 which specifies a preventive packaging procedure.

Part Number Ordering Information, example and explanation:

M55342K02B10E5S where,

M55342	K	02	B	10E5	S
Specification Established Reliability Resistors Conforming to MIL-PRF-55342)	Characteristic	Specification Sheet Number	Termination Type	Resistance Value (Ohms) and Tolerance	Failure Rate Level

** Note: The part number for RM1206 style (MIL-PRF-55342/7) begins with "D55342". The part number for all other styles begins with the standard "M55342".

Part number ordering options are developed using the following criteria:

Style	Detail Specification
RM0505	MIL-PRF-55342/2
RM1505	MIL-PRF-55342/4
RM2208	MIL-PRF-55342/5
RM0705	MIL-PRF-55342/6
RM1206	MIL-PRF-55342/7
RM2010	MIL-PRF-55342/8
RM2512	MIL-PRF-55342/9
RM1010	MIL-PRF-55342/10

Termination Type
B = Base Metallization Barrier (Solderable)
C = Palladium/Silver or Platinum/Silver (Epoxy Bondable)
W = Gold (Wire Bondable)

Characteristic	Resistance Temperature Characteristic (Referenced to +25deg.C)
E	+/-25 parts per million/deg.C
H	+/-50 parts per million/deg.C
K	+/-100 parts per million/deg.C
M	+/-300 parts per million/deg.C

Resistance Tolerance (+/- %)	Resitance Multiplier	Symbol
1.0	x 1	D
1.0	x 1,000	E
1.0	x 1,000,000	F
2.0	x 1	G
2.0	x 1,000	H
2.0	x 1,000,000	T
5.0	x 1	J
5.0	x 1,000	K
5.0	x 1,000,000	L
10.0	x 1	M
10.0	x 1,000	N
10.0	x 1,000,000	P

Failure Rate Level
P = 0.1%/1000 hrs (Level 2)
R = 0.01%/1000 hrs (Level 2)
S = 0.001%/1000 hrs (Level 1)
T = Space Level (See Application Notes)

Resistance Values:

Resistance values in ohms are identified by four characters consisting of three digits and a letter. The letter is used simultaneously as a decimal point, multiplier, and a resistance tolerance designator in accordance with the above table. All of the digits preceding and following the letter represent significant figures. The following table shows examples for the 1.0% tolerance designator.

Designator for 1.0 Percent Tolerance	Resistance (Ohms)
1D00 to 9D88	1.00 to 9.88 inclusive

10D0 to 98D8	10.0 to 98.8 inclusive
100D to 988D	100 to 988 inclusive
1E00 to 9E88	1,000 to 9,880 inclusive
10E0 to 98E8	10,000 to 98,800 inclusive
100E to 988E	100,000 to 988,000 inclusive
1F00 to 9F88	1,000,000 to 9,880,000 inclusive
10F0 to 98F8	10,000,000 to 98,800,000 inclusive

Revision History for MIL-PRF-55342 Listing in the NPSL

06/27/01	Added section for RM1005 (per M55342/3) Improved application note regarding ESD sensitivity per MIL-PRF-55342 notes
09/15/98	Added Space Level ("T" Level) parts to the selection table since State of the Art has qualified.
07/27/98	Added application note warning that thin film resistor types are electrostatic sensitive (ESD).
04/29/98	Made corrections to the part listings for the 100 kohm to 1 Mohm decade range. This range of values inadvertently was listed with the same part numbers as used by the 10 kohm to 100 kohm range. Als
03/02/98	Added dimensional drawings to this section Added application notes 3, 4, 5 and 6
11/28/97	Made changes indicating the specification conversion to a performance specification (MIL-PRF-55342 instead of MIL-R-55342)
10/14/97	Initial Release of MIL-R-55342 Section in the NPSL

Go to -

NEPP

|

NPSL

|

Resistors

MIL-PRF-55342, RESISTORS

Fixed, Resistor, Film, Chip, Established Reliability

RM Styles

Part Number/Ordering Explanation

Important! Application Notes

Revision History for MIL-PRF-55342 Listing in the NPSL

Last Revision: 06/27/01

Click on the link below to see the associated parts selection listing:

Style	Detail Specification	Description (Length x Diameter) [Click the Link Below for Dimensional Drawings]
RM0505	MIL-PRF-55342/2	50 mW (char. K, M), 25 mW (char. E, H), Chip, (0.050" x 0.050") 5.6 ohms to 1 Mohm
RM1005	MIL-PRF-55342/3	100 mW (char. K, M), 50 mW (char. E, H), Chip, (0.010" x 0.050") 5.6 ohms to 1 Mohm
RM1505	MIL-PRF-55342/4	150 mW (char. K, M), 100 mW (char. E, H), Chip, (0.150" x 0.050") 5.6 ohms to 4.7 Mohms
RM2208	MIL-PRF-55342/5	225 mW (char. K, M), 200 mW (char. E, H), Chip, (0.220" x 0.080") 5.6 ohms to 15 Mohms
RM0705	MIL-PRF-55342/6	100 mW (char. K, M), 50 mW (char. E, H), Chip, (0.070" x 0.050") 5.6 ohms to 1 Mohm
RM1206	MIL-PRF-55342/7	250 mW (char. K, M), 125 mW (char. E, H), Chip, (0.126" x 0.063") 5.6 ohms to 5.62 Mohms
RM2010	MIL-PRF-55342/8	800 mW (char. K, M), 400 mW (char. E, H), Chip, (0.200" x 0.100") 5.6 ohms to 15 Mohms

RM2512	MIL-PRF-55342/9	1000 mW (char. K, M), 500 mW (char. E, H), Chip, (0.250" x 0.120") 5.6 ohms to 15 Mohms
RM1010	MIL-PRF-55342/10	500 mW (char. K, M), 250 mW (char. E, H), Chip, (0.100" x 0.100") 5.49 ohms to 5.62 Mohms

MIL-PRF-55342/2 (RM0505) Film Chip Resistors

	Resistance	Power	Char.	Term.	Res. Tol./	Level 1	Level 2	
Part Number	Value (Ohms)	Rating (mW)	(^)	Type (@)	Multiplier (#)	FRL (&)	FRL (&)	Manufacturer
M55342^02@5#60&	5.60	25 (char. E, H) or 50 (char. K, M)	E, H, K, M	B, C, W	G, J, M	S	P, R	DAL,MSI,SOA
M55342^02@5#62&	5.62	25 (char. E, H) or 50 (char. K, M)	E, H, K, M	B, C, W	D	S	P, R	DAL,MSI,SOA
M55342^02@5#76&	5.76	25 (char. E, H) or 50 (char. K, M)	E, H, K, M	B, C, W	D	S	P, R	DAL,MSI,SOA
M55342^02@5#90&	5.90	25 (char. E, H) or 50 (char. K, M)	E, H, K, M	B, C, W	D	S	P, R	DAL,MSI,SOA
M55342^02@6#04&	6.04	25 (char. E, H) or 50 (char. K, M)	E, H, K, M	B, C, W	D	S	P, R	DAL,MSI,SOA
M55342^02@6#19&	6.19	25 (char. E, H) or 50 (char. K, M)	E, H, K, M	B, C, W	D	S	P, R	DAL,MSI,SOA
M55342^02@6#20&	6.20	25 (char. E, H) or 50 (char. K, M)	E, H, K, M	B, C, W	G, J	S	P, R	DAL,MSI,SOA
M55342^02@6#34&	6.34	25 (char. E, H) or 50 (char. K, M)	E, H, K, M	B, C, W	D	S	P, R	DAL,MSI,SOA
M55342^02@6#49&	6.49	25 (char. E, H) or 50 (char. K, M)	E, H, K, M	B, C, W	D	S	P, R	DAL,MSI,SOA
M55342^02@6#65&	6.65	25 (char. E, H) or 50 (char. K, M)	E, H, K, M	B, C, W	D	S	P, R	DAL,MSI,SOA
M55342^02@6#80&	6.80	25 (char. E, H) or 50 (char. K, M)	E, H, K, M	B, C, W	G, J, M	S	P, R	DAL,MSI,SOA
M55342^02@6#81&	6.81	25 (char. E, H) or 50 (char. K, M)	E, H, K, M	B, C, W	D	S	P, R	DAL,MSI,SOA
M55342^02@6#98&	6.98	25 (char. E, H) or 50 (char. K, M)	E, H, K, M	B, C, W	D	S	P, R	DAL,MSI,SOA
M55342^02@7#15&	7.15	25 (char. E, H) or 50 (char. K, M)	E, H, K, M	B, C, W	D	S	P, R	DAL,MSI,SOA
M55342^02@7#32&	7.32	25 (char. E, H) or 50 (char. K, M)	E, H, K, M	B, C, W	D	S	P, R	DAL,MSI,SOA
M55342^02@7#50&	7.50	25 (char. E, H) or 50 (char. K, M)	E, H, K, M	B, C, W	D, G, J	S	P, R	DAL,MSI,SOA
M55342^02@7#68&	7.68	25 (char. E, H) or 50 (char. K, M)	E, H, K, M	B, C, W	D	S	P, R	DAL,MSI,SOA
M55342^02@7#87&	7.87	25 (char. E, H) or 50 (char. K, M)	E, H, K, M	B, C, W	D	S	P, R	DAL,MSI,SOA
M55342^02@8#06&	8.06	25 (char. E, H) or 50 (char. K, M)	E, H, K, M	B, C, W	D	S	P, R	DAL,MSI,SOA
M55342^02@8#20&	8.20	25 (char. E, H) or 50 (char. K, M)	E, H, K, M	B, C, W	G, J, M	S	P, R	DAL,MSI,SOA
M55342^02@8#25&	8.25	25 (char. E, H) or 50 (char. K, M)	E, H, K, M	B, C, W	D	S	P, R	DAL,MSI,SOA
M55342^02@8#45&	8.45	25 (char. E, H) or 50 (char. K, M)	E, H, K, M	B, C, W	D	S	P, R	DAL,MSI,SOA
M55342^02@8#66&	8.66	25 (char. E, H) or 50 (char. K, M)	E, H, K, M	B, C, W	D	S	P, R	DAL,MSI,SOA
M55342^02@8#87&	8.87	25 (char. E, H) or 50 (char. K, M)	E, H, K, M	B, C, W	D	S	P, R	DAL,MSI,SOA
M55342^02@9#09&	9.09	25 (char. E, H) or 50 (char. K, M)	E, H, K, M	B, C, W	D	S	P, R	DAL,MSI,SOA
M55342^02@9#10&	9.10	25 (char. E, H) or 50 (char. K, M)	E, H, K, M	B, C, W	G, J	S	P, R	DAL,MSI,SOA
M55342^02@9#31&	9.31	25 (char. E, H) or 50 (char. K, M)	E, H, K, M	B, C, W	D	S	P, R	DAL,MSI,SOA
M55342^02@9#53&	9.53	25 (char. E, H) or 50 (char. K, M)	E, H, K, M	B, C, W	D	S	P, R	DAL,MSI,SOA
M55342^02@9#76&	9.76	25 (char. E, H) or 50 (char. K, M)	E, H, K, M	B, C, W	D	S	P, R	DAL,MSI,SOA
M55342^02@10#0&	10.0	25 (char. E, H) or 50 (char. K, M)	E, H, K, M	B, C, W	D, G, J, M	S	P, R	DAL,MSI,SOA
M55342^02@10#2&	10.2	25 (char. E, H) or 50 (char. K, M)	E, H, K, M	B, C, W	D	S	P, R	DAL,MSI,SOA
M55342^02@10#5&	10.5	25 (char. E, H) or 50 (char. K, M)	E, H, K, M	B, C, W	D	S	P, R	DAL,MSI,SOA
M55342^02@10#7&	10.7	25 (char. E, H) or 50 (char. K, M)	E, H, K, M	B, C, W	D	S	P, R	DAL,MSI,SOA
M55342^02@11#0&	11.0	25 (char. E, H) or 50 (char. K, M)	E, H, K, M	B, C, W	D, G, J	S	P, R	DAL,MSI,SOA
M55342^02@11#3&	11.3	25 (char. E, H) or 50 (char. K, M)	E, H, K, M	B, C, W	D	S	P, R	DAL,MSI,SOA
M55342^02@11#5&	11.5	25 (char. E, H) or 50 (char. K, M)	E, H, K, M	B, C, W	D	S	P, R	DAL,MSI,SOA
M55342^02@11#8&	11.8	25 (char. E, H) or 50 (char. K, M)	E, H, K, M	B, C, W	D	S	P, R	DAL,MSI,SOA
M55342^02@12#0&	12.0	25 (char. E, H) or 50 (char. K, M)	E, H, K, M	B, C, W	G, J, M	S	P, R	DAL,MSI,SOA

M55342^02@12#1&	12.1	25 (char. E, H) or 50 (char. K, M)	E, H, K, M	B, C, W	D	S	P, R	DAL,MSI,SOA
M55342^02@12#4&	12.4	25 (char. E, H) or 50 (char. K, M)	E, H, K, M	B, C, W	D	S	P, R	DAL,MSI,SOA
M55342^02@12#7&	12.7	25 (char. E, H) or 50 (char. K, M)	E, H, K, M	B, C, W	D	S	P, R	DAL,MSI,SOA
M55342^02@13#0&	13.0	25 (char. E, H) or 50 (char. K, M)	E, H, K, M	B, C, W	D, G, J	S	P, R	DAL,MSI,SOA
M55342^02@13#3&	13.3	25 (char. E, H) or 50 (char. K, M)	E, H, K, M	B, C, W	D	S	P, R	DAL,MSI,SOA
M55342^02@13#7&	13.7	25 (char. E, H) or 50 (char. K, M)	E, H, K, M	B, C, W	D	S	P, R	DAL,MSI,SOA
M55342^02@14#0&	14.0	25 (char. E, H) or 50 (char. K, M)	E, H, K, M	B, C, W	D	S	P, R	DAL,MSI,SOA
M55342^02@14#3&	14.3	25 (char. E, H) or 50 (char. K, M)	E, H, K, M	B, C, W	D	S	P, R	DAL,MSI,SOA
M55342^02@14#7&	14.7	25 (char. E, H) or 50 (char. K, M)	E, H, K, M	B, C, W	D	S	P, R	DAL,MSI,SOA
M55342^02@15#0&	15.0	25 (char. E, H) or 50 (char. K, M)	E, H, K, M	B, C, W	D, G, J, M	S	P, R	DAL,MSI,SOA
M55342^02@15#4&	15.4	25 (char. E, H) or 50 (char. K, M)	E, H, K, M	B, C, W	D	S	P, R	DAL,MSI,SOA
M55342^02@15#8&	15.8	25 (char. E, H) or 50 (char. K, M)	E, H, K, M	B, C, W	D	S	P, R	DAL,MSI,SOA
M55342^02@16#0&	16.0	25 (char. E, H) or 50 (char. K, M)	E, H, K, M	B, C, W	G, J	S	P, R	DAL,MSI,SOA
M55342^02@16#2&	16.2	25 (char. E, H) or 50 (char. K, M)	E, H, K, M	B, C, W	D	S	P, R	DAL,MSI,SOA
M55342^02@16#5&	16.5	25 (char. E, H) or 50 (char. K, M)	E, H, K, M	B, C, W	D	S	P, R	DAL,MSI,SOA
M55342^02@16#9&	16.9	25 (char. E, H) or 50 (char. K, M)	E, H, K, M	B, C, W	D	S	P, R	DAL,MSI,SOA
M55342^02@17#4&	17.4	25 (char. E, H) or 50 (char. K, M)	E, H, K, M	B, C, W	D	S	P, R	DAL,MSI,SOA
M55342^02@17#8&	17.8	25 (char. E, H) or 50 (char. K, M)	E, H, K, M	B, C, W	D	S	P, R	DAL,MSI,SOA
M55342^02@18#0&	18.0	25 (char. E, H) or 50 (char. K, M)	E, H, K, M	B, C, W	G, J, M	S	P, R	DAL,MSI,SOA
M55342^02@18#2&	18.2	25 (char. E, H) or 50 (char. K, M)	E, H, K, M	B, C, W	D	S	P, R	DAL,MSI,SOA
M55342^02@18#7&	18.7	25 (char. E, H) or 50 (char. K, M)	E, H, K, M	B, C, W	D	S	P, R	DAL,MSI,SOA
M55342^02@19#1&	19.1	25 (char. E, H) or 50 (char. K, M)	E, H, K, M	B, C, W	D	S	P, R	DAL,MSI,SOA
M55342^02@19#6&	19.6	25 (char. E, H) or 50 (char. K, M)	E, H, K, M	B, C, W	D	S	P, R	DAL,MSI,SOA
M55342^02@20#0&	20.0	25 (char. E, H) or 50 (char. K, M)	E, H, K, M	B, C, W	D, G, J, M	S	P, R	DAL,MSI,OHM,SOA
M55342^02@20#5&	20.5	25 (char. E, H) or 50 (char. K, M)	E, H, K, M	B, C, W	D	S	P, R	DAL,MSI,OHM,SOA
M55342^02@21#0&	21.0	25 (char. E, H) or 50 (char. K, M)	E, H, K, M	B, C, W	D	S	P, R	DAL,MSI,OHM,SOA
M55342^02@21#5&	21.5	25 (char. E, H) or 50 (char. K, M)	E, H, K, M	B, C, W	D	S	P, R	DAL,MSI,OHM,SOA
M55342^02@22#0&	22.0	25 (char. E, H) or 50 (char. K, M)	E, H, K, M	B, C, W	G, J, M	S	P, R	DAL,MSI,OHM,SOA
M55342^02@22#1&	22.1	25 (char. E, H) or 50 (char. K, M)	E, H, K, M	B, C, W	D	S	P, R	DAL,MSI,OHM,SOA
M55342^02@22#6&	22.6	25 (char. E, H) or 50 (char. K, M)	E, H, K, M	B, C, W	D	S	P, R	DAL,MSI,OHM,SOA
M55342^02@23#2&	23.2	25 (char. E, H) or 50 (char. K, M)	E, H, K, M	B, C, W	D	S	P, R	DAL,MSI,OHM,SOA
M55342^02@23#7&	23.7	25 (char. E, H) or 50 (char. K, M)	E, H, K, M	B, C, W	D	S	P, R	DAL,MSI,OHM,SOA
M55342^02@24#0&	24.0	25 (char. E, H) or 50 (char. K, M)	E, H, K, M	B, C, W	G, J	S	P, R	DAL,MSI,OHM,SOA
M55342^02@24#3&	24.3	25 (char. E, H) or 50 (char. K, M)	E, H, K, M	B, C, W	D	S	P, R	DAL,MSI,OHM,SOA
M55342^02@24#9&	24.9	25 (char. E, H) or 50 (char. K, M)	E, H, K, M	B, C, W	D	S	P, R	DAL,MSI,OHM,SOA
M55342^02@25#5&	25.5	25 (char. E, H) or 50 (char. K, M)	E, H, K, M	B, C, W	D	S	P, R	DAL,MSI,OHM,SOA
M55342^02@26#1&	26.1	25 (char. E, H) or 50 (char. K, M)	E, H, K, M	B, C, W	D	S	P, R	DAL,MSI,OHM,SOA
M55342^02@26#7&	26.7	25 (char. E, H) or 50 (char. K, M)	E, H, K, M	B, C, W	D	S	P, R	DAL,MSI,OHM,SOA
M55342^02@27#0&	27.0	25 (char. E, H) or 50 (char. K, M)	E, H, K, M	B, C, W	G, J, M	S	P, R	DAL,MSI,OHM,SOA
M55342^02@27#4&	27.4	25 (char. E, H) or 50 (char. K, M)	E, H, K, M	B, C, W	D	S	P, R	DAL,MSI,OHM,SOA
M55342^02@28#0&	28.0	25 (char. E, H) or 50 (char. K, M)	E, H, K, M	B, C, W	D	S	P, R	DAL,MSI,OHM,SOA
M55342^02@28#7&	28.7	25 (char. E, H) or 50 (char. K, M)	E, H, K, M	B, C, W	D	S	P, R	DAL,MSI,OHM,SOA
M55342^02@29#4&	29.4	25 (char. E, H) or 50 (char. K, M)	E, H, K, M	B, C, W	D	S	P, R	DAL,MSI,OHM,SOA
M55342^02@30#0&	30.0	25 (char. E, H) or 50 (char. K, M)	E, H, K, M	B, C, W	G, J	S	P, R	DAL,MSI,OHM,SOA
M55342^02@30#1&	30.1	25 (char. E, H) or 50 (char. K, M)	E, H, K, M	B, C, W	D	S	P, R	DAL,MSI,OHM,SOA
M55342^02@30#9&	30.9	25 (char. E, H) or 50 (char. K, M)	E, H, K, M	B, C, W	D	S	P, R	DAL,MSI,OHM,SOA
M55342^02@31#6&	31.6	25 (char. E, H) or 50 (char. K, M)	E, H, K, M	B, C, W	D	S	P, R	DAL,MSI,OHM,SOA

M55342^02@32#4&	32.4	25 (char. E, H) or 50 (char. K, M)	E, H, K, M	B, C, W	D	S	P, R	DAL,MSI,OHM,SOA
M55342^02@33#0&	33.0	25 (char. E, H) or 50 (char. K, M)	E, H, K, M	B, C, W	G, J, M	S	P, R	DAL,MSI,OHM,SOA
M55342^02@33#2&	33.2	25 (char. E, H) or 50 (char. K, M)	E, H, K, M	B, C, W	D	S	P, R	DAL,MSI,OHM,SOA
M55342^02@34#0&	34.0	25 (char. E, H) or 50 (char. K, M)	E, H, K, M	B, C, W	D	S	P, R	DAL,MSI,OHM,SOA
M55342^02@34#8&	34.8	25 (char. E, H) or 50 (char. K, M)	E, H, K, M	B, C, W	D	S	P, R	DAL,MSI,OHM,SOA
M55342^02@35#7&	35.7	25 (char. E, H) or 50 (char. K, M)	E, H, K, M	B, C, W	D	S	P, R	DAL,MSI,OHM,SOA
M55342^02@36#0&	36.0	25 (char. E, H) or 50 (char. K, M)	E, H, K, M	B, C, W	G, J	S	P, R	DAL,MSI,OHM,SOA
M55342^02@36#5&	36.5	25 (char. E, H) or 50 (char. K, M)	E, H, K, M	B, C, W	D	S	P, R	DAL,MSI,OHM,SOA
M55342^02@37#4&	37.4	25 (char. E, H) or 50 (char. K, M)	E, H, K, M	B, C, W	D	S	P, R	DAL,MSI,OHM,SOA
M55342^02@38#3&	38.3	25 (char. E, H) or 50 (char. K, M)	E, H, K, M	B, C, W	D	S	P, R	DAL,MSI,OHM,SOA
M55342^02@39#0&	39.0	25 (char. E, H) or 50 (char. K, M)	E, H, K, M	B, C, W	G, J, M	S	P, R	DAL,MSI,OHM,SOA
M55342^02@39#2&	39.2	25 (char. E, H) or 50 (char. K, M)	E, H, K, M	B, C, W	D	S	P, R	DAL,MSI,OHM,SOA
M55342^02@40#2&	40.2	25 (char. E, H) or 50 (char. K, M)	E, H, K, M	B, C, W	D	S	P, R	DAL,MSI,OHM,SOA
M55342^02@41#2&	41.2	25 (char. E, H) or 50 (char. K, M)	E, H, K, M	B, C, W	D	S	P, R	DAL,MSI,OHM,SOA
M55342^02@42#2&	42.2	25 (char. E, H) or 50 (char. K, M)	E, H, K, M	B, C, W	D	S	P, R	DAL,MSI,OHM,SOA
M55342^02@43#0&	43.0	25 (char. E, H) or 50 (char. K, M)	E, H, K, M	B, C, W	G, J	S	P, R	DAL,MSI,OHM,SOA
M55342^02@43#2&	43.2	25 (char. E, H) or 50 (char. K, M)	E, H, K, M	B, C, W	D	S	P, R	DAL,MSI,OHM,SOA
M55342^02@44#2&	44.2	25 (char. E, H) or 50 (char. K, M)	E, H, K, M	B, C, W	D	S	P, R	DAL,MSI,OHM,SOA
M55342^02@45#3&	45.3	25 (char. E, H) or 50 (char. K, M)	E, H, K, M	B, C, W	D	S	P, R	DAL,MSI,OHM,SOA
M55342^02@46#4&	46.4	25 (char. E, H) or 50 (char. K, M)	E, H, K, M	B, C, W	D	S	P, R	DAL,MSI,OHM,SOA
M55342^02@47#0&	47.0	25 (char. E, H) or 50 (char. K, M)	E, H, K, M	B, C, W	G, J, M	S	P, R	DAL,MSI,OHM,SOA
M55342^02@47#5&	47.5	25 (char. E, H) or 50 (char. K, M)	E, H, K, M	B, C, W	D	S	P, R	DAL,MSI,OHM,SOA
M55342^02@48#7&	48.7	25 (char. E, H) or 50 (char. K, M)	E, H, K, M	B, C, W	D	S	P, R	DAL,MSI,OHM,SOA
M55342^02@49#9&	49.9	25 (char. E, H) or 50 (char. K, M)	E, H, K, M	B, C, W	D	S	P, R	DAL,MSI,OHM,SOA
M55342^02@51#0&	51.0	25 (char. E, H) or 50 (char. K, M)	E, H, K, M	B, C, W	G, J	S	P, R	DAL,MSI,OHM,SOA
M55342^02@51#1&	51.1	25 (char. E, H) or 50 (char. K, M)	E, H, K, M	B, C, W	D	S	P, R	DAL,MSI,OHM,SOA
M55342^02@52#3&	52.3	25 (char. E, H) or 50 (char. K, M)	E, H, K, M	B, C, W	D	S	P, R	DAL,MSI,OHM,SOA
M55342^02@53#6&	53.6	25 (char. E, H) or 50 (char. K, M)	E, H, K, M	B, C, W	D	S	P, R	DAL,MSI,OHM,SOA
M55342^02@54#9&	54.9	25 (char. E, H) or 50 (char. K, M)	E, H, K, M	B, C, W	D	S	P, R	DAL,MSI,OHM,SOA
M55342^02@56#0&	56.0	25 (char. E, H) or 50 (char. K, M)	E, H, K, M	B, C, W	G, J, M	S	P, R	DAL,MSI,OHM,SOA
M55342^02@56#2&	56.2	25 (char. E, H) or 50 (char. K, M)	E, H, K, M	B, C, W	D	S	P, R	DAL,MSI,OHM,SOA
M55342^02@57#6&	57.6	25 (char. E, H) or 50 (char. K, M)	E, H, K, M	B, C, W	D	S	P, R	DAL,MSI,OHM,SOA
M55342^02@59#0&	59.0	25 (char. E, H) or 50 (char. K, M)	E, H, K, M	B, C, W	D	S	P, R	DAL,MSI,OHM,SOA
M55342^02@60#4&	60.4	25 (char. E, H) or 50 (char. K, M)	E, H, K, M	B, C, W	D	S	P, R	DAL,MSI,OHM,SOA
M55342^02@61#9&	61.9	25 (char. E, H) or 50 (char. K, M)	E, H, K, M	B, C, W	D	S	P, R	DAL,MSI,OHM,SOA
M55342^02@62#0&	62.0	25 (char. E, H) or 50 (char. K, M)	E, H, K, M	B, C, W	G, J	S	P, R	DAL,MSI,OHM,SOA
M55342^02@63#4&	63.4	25 (char. E, H) or 50 (char. K, M)	E, H, K, M	B, C, W	D	S	P, R	DAL,MSI,OHM,SOA
M55342^02@64#9&	64.9	25 (char. E, H) or 50 (char. K, M)	E, H, K, M	B, C, W	D	S	P, R	DAL,MSI,OHM,SOA
M55342^02@66#5&	66.5	25 (char. E, H) or 50 (char. K, M)	E, H, K, M	B, C, W	D	S	P, R	DAL,MSI,OHM,SOA
M55342^02@68#0&	68.0	25 (char. E, H) or 50 (char. K, M)	E, H, K, M	B, C, W	G, J, M	S	P, R	DAL,MSI,OHM,SOA
M55342^02@68#1&	68.1	25 (char. E, H) or 50 (char. K, M)	E, H, K, M	B, C, W	D	S	P, R	DAL,MSI,OHM,SOA
M55342^02@69#8&	69.8	25 (char. E, H) or 50 (char. K, M)	E, H, K, M	B, C, W	D	S	P, R	DAL,MSI,OHM,SOA
M55342^02@71#5&	71.5	25 (char. E, H) or 50 (char. K, M)	E, H, K, M	B, C, W	D	S	P, R	DAL,MSI,OHM,SOA
M55342^02@73#2&	73.2	25 (char. E, H) or 50 (char. K, M)	E, H, K, M	B, C, W	D	S	P, R	DAL,MSI,OHM,SOA
M55342^02@75#0&	75.0	25 (char. E, H) or 50 (char. K, M)	E, H, K, M	B, C, W	D, G, J	S	P, R	DAL,MSI,OHM,SOA
M55342^02@76#8&	76.8	25 (char. E, H) or 50 (char. K, M)	E, H, K, M	B, C, W	D	S	P, R	DAL,MSI,OHM,SOA
M55342^02@78#7&	78.7	25 (char. E, H) or 50 (char. K, M)	E, H, K, M	B, C, W	D	S	P, R	DAL,MSI,OHM,SOA

M55342^02@80#6&	80.6	25 (char. E, H) or 50 (char. K, M)	E, H, K, M	B, C, W	D	S	P, R	DAL,MSI,OHM,SOA
M55342^02@82#0&	82.0	25 (char. E, H) or 50 (char. K, M)	E, H, K, M	B, C, W	G, J, M	S	P, R	DAL,MSI,OHM,SOA
M55342^02@82#5&	82.5	25 (char. E, H) or 50 (char. K, M)	E, H, K, M	B, C, W	D	S	P, R	DAL,MSI,OHM,SOA
M55342^02@84#5&	84.5	25 (char. E, H) or 50 (char. K, M)	E, H, K, M	B, C, W	D	S	P, R	DAL,MSI,OHM,SOA
M55342^02@86#6&	86.6	25 (char. E, H) or 50 (char. K, M)	E, H, K, M	B, C, W	D	S	P, R	DAL,MSI,OHM,SOA
M55342^02@88#7&	88.7	25 (char. E, H) or 50 (char. K, M)	E, H, K, M	B, C, W	D	S	P, R	DAL,MSI,OHM,SOA
M55342^02@90#9&	90.9	25 (char. E, H) or 50 (char. K, M)	E, H, K, M	B, C, W	D	S	P, R	DAL,MSI,OHM,SOA
M55342^02@91#0&	91.0	25 (char. E, H) or 50 (char. K, M)	E, H, K, M	B, C, W	G, J	S	P, R	DAL,MSI,OHM,SOA
M55342^02@93#1&	93.1	25 (char. E, H) or 50 (char. K, M)	E, H, K, M	B, C, W	D	S	P, R	DAL,MSI,OHM,SOA
M55342^02@95#3&	95.3	25 (char. E, H) or 50 (char. K, M)	E, H, K, M	B, C, W	D	S	P, R	DAL,MSI,OHM,SOA
M55342^02@97#6&	97.6	25 (char. E, H) or 50 (char. K, M)	E, H, K, M	B, C, W	D	S	P, R	DAL,MSI,OHM,SOA
M55342^02@100#&	100	25 (char. E, H) or 50 (char. K, M)	E, H, K, M	B, C, W	D, G, J, M	S	P, R	DAL,MSI,OHM,SOA
M55342^02@102#&	102	25 (char. E, H) or 50 (char. K, M)	E, H, K, M	B, C, W	D	S	P, R	DAL,MSI,OHM,SOA
M55342^02@105#&	105	25 (char. E, H) or 50 (char. K, M)	E, H, K, M	B, C, W	D	S	P, R	DAL,MSI,OHM,SOA
M55342^02@107#&	107	25 (char. E, H) or 50 (char. K, M)	E, H, K, M	B, C, W	D	S	P, R	DAL,MSI,OHM,SOA
M55342^02@110#&	110	25 (char. E, H) or 50 (char. K, M)	E, H, K, M	B, C, W	D, G, J	S	P, R	DAL,MSI,OHM,SOA
M55342^02@113#&	113	25 (char. E, H) or 50 (char. K, M)	E, H, K, M	B, C, W	D	S	P, R	DAL,MSI,OHM,SOA
M55342^02@115#&	115	25 (char. E, H) or 50 (char. K, M)	E, H, K, M	B, C, W	D	S	P, R	DAL,MSI,OHM,SOA
M55342^02@118#&	118	25 (char. E, H) or 50 (char. K, M)	E, H, K, M	B, C, W	D	S	P, R	DAL,MSI,OHM,SOA
M55342^02@120#&	120	25 (char. E, H) or 50 (char. K, M)	E, H, K, M	B, C, W	G, J, M	S	P, R	DAL,MSI,OHM,SOA
M55342^02@121#&	121	25 (char. E, H) or 50 (char. K, M)	E, H, K, M	B, C, W	D	S	P, R	DAL,MSI,OHM,SOA
M55342^02@124#&	124	25 (char. E, H) or 50 (char. K, M)	E, H, K, M	B, C, W	D	S	P, R	DAL,MSI,OHM,SOA
M55342^02@127#&	127	25 (char. E, H) or 50 (char. K, M)	E, H, K, M	B, C, W	D	S	P, R	DAL,MSI,OHM,SOA
M55342^02@130#&	130	25 (char. E, H) or 50 (char. K, M)	E, H, K, M	B, C, W	D, G, J	S	P, R	DAL,MSI,OHM,SOA
M55342^02@133#&	133	25 (char. E, H) or 50 (char. K, M)	E, H, K, M	B, C, W	D	S	P, R	DAL,MSI,OHM,SOA
M55342^02@137#&	137	25 (char. E, H) or 50 (char. K, M)	E, H, K, M	B, C, W	D	S	P, R	DAL,MSI,OHM,SOA
M55342^02@140#&	140	25 (char. E, H) or 50 (char. K, M)	E, H, K, M	B, C, W	D	S	P, R	DAL,MSI,OHM,SOA
M55342^02@143#&	143	25 (char. E, H) or 50 (char. K, M)	E, H, K, M	B, C, W	D	S	P, R	DAL,MSI,OHM,SOA
M55342^02@147#&	147	25 (char. E, H) or 50 (char. K, M)	E, H, K, M	B, C, W	D	S	P, R	DAL,MSI,OHM,SOA
M55342^02@150#&	150	25 (char. E, H) or 50 (char. K, M)	E, H, K, M	B, C, W	D, G, J, M	S	P, R	DAL,MSI,OHM,SOA
M55342^02@154#&	154	25 (char. E, H) or 50 (char. K, M)	E, H, K, M	B, C, W	D	S	P, R	DAL,MSI,OHM,SOA
M55342^02@158#&	158	25 (char. E, H) or 50 (char. K, M)	E, H, K, M	B, C, W	D	S	P, R	DAL,MSI,OHM,SOA
M55342^02@160#&	160	25 (char. E, H) or 50 (char. K, M)	E, H, K, M	B, C, W	G, J	S	P, R	DAL,MSI,OHM,SOA
M55342^02@162#&	162	25 (char. E, H) or 50 (char. K, M)	E, H, K, M	B, C, W	D	S	P, R	DAL,MSI,OHM,SOA
M55342^02@165#&	165	25 (char. E, H) or 50 (char. K, M)	E, H, K, M	B, C, W	D	S	P, R	DAL,MSI,OHM,SOA
M55342^02@169#&	169	25 (char. E, H) or 50 (char. K, M)	E, H, K, M	B, C, W	D	S	P, R	DAL,MSI,OHM,SOA
M55342^02@174#&	174	25 (char. E, H) or 50 (char. K, M)	E, H, K, M	B, C, W	D	S	P, R	DAL,MSI,OHM,SOA
M55342^02@178#&	178	25 (char. E, H) or 50 (char. K, M)	E, H, K, M	B, C, W	D	S	P, R	DAL,MSI,OHM,SOA
M55342^02@180#&	180	25 (char. E, H) or 50 (char. K, M)	E, H, K, M	B, C, W	G, J, M	S	P, R	DAL,MSI,OHM,SOA
M55342^02@182#&	182	25 (char. E, H) or 50 (char. K, M)	E, H, K, M	B, C, W	D	S	P, R	DAL,MSI,OHM,SOA
M55342^02@187#&	187	25 (char. E, H) or 50 (char. K, M)	E, H, K, M	B, C, W	D	S	P, R	DAL,MSI,OHM,SOA
M55342^02@191#&	191	25 (char. E, H) or 50 (char. K, M)	E, H, K, M	B, C, W	D	S	P, R	DAL,MSI,OHM,SOA
M55342^02@196#&	196	25 (char. E, H) or 50 (char. K, M)	E, H, K, M	B, C, W	D	S	P, R	DAL,MSI,OHM,SOA
M55342^02@200#&	200	25 (char. E, H) or 50 (char. K, M)	E, H, K, M	B, C, W	D, G, J, M	S	P, R	DAL,MSI,OHM,SOA
M55342^02@205#&	205	25 (char. E, H) or 50 (char. K, M)	E, H, K, M	B, C, W	D	S	P, R	DAL,MSI,OHM,SOA
M55342^02@210#&	210	25 (char. E, H) or 50 (char. K, M)	E, H, K, M	B, C, W	D	S	P, R	DAL,MSI,OHM,SOA
M55342^02@215#&	215	25 (char. E, H) or 50 (char. K, M)	E, H, K, M	B, C, W	D	S	P, R	DAL,MSI,OHM,SOA

M55342^02@220#&	220	25 (char. E, H) or 50 (char. K, M)	E, H, K, M	B, C, W	G, J, M	S	P, R	DAL,MSI,OHM,SOA
M55342^02@221#&	221	25 (char. E, H) or 50 (char. K, M)	E, H, K, M	B, C, W	D	S	P, R	DAL,MSI,OHM,SOA
M55342^02@226#&	226	25 (char. E, H) or 50 (char. K, M)	E, H, K, M	B, C, W	D	S	P, R	DAL,MSI,OHM,SOA
M55342^02@232#&	232	25 (char. E, H) or 50 (char. K, M)	E, H, K, M	B, C, W	D	S	P, R	DAL,MSI,OHM,SOA
M55342^02@237#&	237	25 (char. E, H) or 50 (char. K, M)	E, H, K, M	B, C, W	D	S	P, R	DAL,MSI,OHM,SOA
M55342^02@240#&	240	25 (char. E, H) or 50 (char. K, M)	E, H, K, M	B, C, W	G, J	S	P, R	DAL,MSI,OHM,SOA
M55342^02@243#&	243	25 (char. E, H) or 50 (char. K, M)	E, H, K, M	B, C, W	D	S	P, R	DAL,MSI,OHM,SOA
M55342^02@249#&	249	25 (char. E, H) or 50 (char. K, M)	E, H, K, M	B, C, W	D	S	P, R	DAL,MSI,OHM,SOA
M55342^02@255#&	255	25 (char. E, H) or 50 (char. K, M)	E, H, K, M	B, C, W	D	S	P, R	DAL,MSI,OHM,SOA
M55342^02@261#&	261	25 (char. E, H) or 50 (char. K, M)	E, H, K, M	B, C, W	D	S	P, R	DAL,MSI,OHM,SOA
M55342^02@267#&	267	25 (char. E, H) or 50 (char. K, M)	E, H, K, M	B, C, W	D	S	P, R	DAL,MSI,OHM,SOA
M55342^02@270#&	270	25 (char. E, H) or 50 (char. K, M)	E, H, K, M	B, C, W	G, J, M	S	P, R	DAL,MSI,OHM,SOA
M55342^02@274#&	274	25 (char. E, H) or 50 (char. K, M)	E, H, K, M	B, C, W	D	S	P, R	DAL,MSI,OHM,SOA
M55342^02@280#&	280	25 (char. E, H) or 50 (char. K, M)	E, H, K, M	B, C, W	D	S	P, R	DAL,MSI,OHM,SOA
M55342^02@287#&	287	25 (char. E, H) or 50 (char. K, M)	E, H, K, M	B, C, W	D	S	P, R	DAL,MSI,OHM,SOA
M55342^02@294#&	294	25 (char. E, H) or 50 (char. K, M)	E, H, K, M	B, C, W	D	S	P, R	DAL,MSI,OHM,SOA
M55342^02@300#&	300	25 (char. E, H) or 50 (char. K, M)	E, H, K, M	B, C, W	G, J	S	P, R	DAL,MSI,OHM,SOA
M55342^02@301#&	301	25 (char. E, H) or 50 (char. K, M)	E, H, K, M	B, C, W	D	S	P, R	DAL,MSI,OHM,SOA
M55342^02@309#&	309	25 (char. E, H) or 50 (char. K, M)	E, H, K, M	B, C, W	D	S	P, R	DAL,MSI,OHM,SOA
M55342^02@316#&	316	25 (char. E, H) or 50 (char. K, M)	E, H, K, M	B, C, W	D	S	P, R	DAL,MSI,OHM,SOA
M55342^02@324#&	324	25 (char. E, H) or 50 (char. K, M)	E, H, K, M	B, C, W	D	S	P, R	DAL,MSI,OHM,SOA
M55342^02@330#&	330	25 (char. E, H) or 50 (char. K, M)	E, H, K, M	B, C, W	G, J, M	S	P, R	DAL,MSI,OHM,SOA
M55342^02@332#&	332	25 (char. E, H) or 50 (char. K, M)	E, H, K, M	B, C, W	D	S	P, R	DAL,MSI,OHM,SOA
M55342^02@340#&	340	25 (char. E, H) or 50 (char. K, M)	E, H, K, M	B, C, W	D	S	P, R	DAL,MSI,OHM,SOA
M55342^02@348#&	348	25 (char. E, H) or 50 (char. K, M)	E, H, K, M	B, C, W	D	S	P, R	DAL,MSI,OHM,SOA
M55342^02@357#&	357	25 (char. E, H) or 50 (char. K, M)	E, H, K, M	B, C, W	D	S	P, R	DAL,MSI,OHM,SOA
M55342^02@360#&	360	25 (char. E, H) or 50 (char. K, M)	E, H, K, M	B, C, W	G, J	S	P, R	DAL,MSI,OHM,SOA
M55342^02@365#&	365	25 (char. E, H) or 50 (char. K, M)	E, H, K, M	B, C, W	D	S	P, R	DAL,MSI,OHM,SOA
M55342^02@374#&	374	25 (char. E, H) or 50 (char. K, M)	E, H, K, M	B, C, W	D	S	P, R	DAL,MSI,OHM,SOA
M55342^02@383#&	383	25 (char. E, H) or 50 (char. K, M)	E, H, K, M	B, C, W	D	S	P, R	DAL,MSI,OHM,SOA
M55342^02@390#&	390	25 (char. E, H) or 50 (char. K, M)	E, H, K, M	B, C, W	G, J, M	S	P, R	DAL,MSI,OHM,SOA
M55342^02@392#&	392	25 (char. E, H) or 50 (char. K, M)	E, H, K, M	B, C, W	D	S	P, R	DAL,MSI,OHM,SOA
M55342^02@402#&	402	25 (char. E, H) or 50 (char. K, M)	E, H, K, M	B, C, W	D	S	P, R	DAL,MSI,OHM,SOA
M55342^02@412#&	412	25 (char. E, H) or 50 (char. K, M)	E, H, K, M	B, C, W	D	S	P, R	DAL,MSI,OHM,SOA
M55342^02@422#&	422	25 (char. E, H) or 50 (char. K, M)	E, H, K, M	B, C, W	D	S	P, R	DAL,MSI,OHM,SOA
M55342^02@430#&	430	25 (char. E, H) or 50 (char. K, M)	E, H, K, M	B, C, W	G, J	S	P, R	DAL,MSI,OHM,SOA
M55342^02@432#&	432	25 (char. E, H) or 50 (char. K, M)	E, H, K, M	B, C, W	D	S	P, R	DAL,MSI,OHM,SOA
M55342^02@442#&	442	25 (char. E, H) or 50 (char. K, M)	E, H, K, M	B, C, W	D	S	P, R	DAL,MSI,OHM,SOA
M55342^02@453#&	453	25 (char. E, H) or 50 (char. K, M)	E, H, K, M	B, C, W	D	S	P, R	DAL,MSI,OHM,SOA
M55342^02@464#&	464	25 (char. E, H) or 50 (char. K, M)	E, H, K, M	B, C, W	D	S	P, R	DAL,MSI,OHM,SOA
M55342^02@470#&	470	25 (char. E, H) or 50 (char. K, M)	E, H, K, M	B, C, W	G, J, M	S	P, R	DAL,MSI,OHM,SOA
M55342^02@475#&	475	25 (char. E, H) or 50 (char. K, M)	E, H, K, M	B, C, W	D	S	P, R	DAL,MSI,OHM,SOA
M55342^02@487#&	487	25 (char. E, H) or 50 (char. K, M)	E, H, K, M	B, C, W	D	S	P, R	DAL,MSI,OHM,SOA
M55342^02@499#&	499	25 (char. E, H) or 50 (char. K, M)	E, H, K, M	B, C, W	D	S	P, R	DAL,MSI,OHM,SOA
M55342^02@510#&	510	25 (char. E, H) or 50 (char. K, M)	E, H, K, M	B, C, W	G, J	S	P, R	DAL,MSI,OHM,SOA
M55342^02@511#&	511	25 (char. E, H) or 50 (char. K, M)	E, H, K, M	B, C, W	D	S	P, R	DAL,MSI,OHM,SOA
M55342^02@523#&	523	25 (char. E, H) or 50 (char. K, M)	E, H, K, M	B, C, W	D	S	P, R	DAL,MSI,OHM,SOA

M55342^02@536#&	536	25 (char. E, H) or 50 (char. K, M)	E, H, K, M	B, C, W	D	S	P, R	DAL,MSI,OHM,SOA
M55342^02@549#&	549	25 (char. E, H) or 50 (char. K, M)	E, H, K, M	B, C, W	D	S	P, R	DAL,MSI,OHM,SOA
M55342^02@560#&	560	25 (char. E, H) or 50 (char. K, M)	E, H, K, M	B, C, W	G, J, M	S	P, R	DAL,MSI,OHM,SOA
M55342^02@562#&	562	25 (char. E, H) or 50 (char. K, M)	E, H, K, M	B, C, W	D	S	P, R	DAL,MSI,OHM,SOA
M55342^02@576#&	576	25 (char. E, H) or 50 (char. K, M)	E, H, K, M	B, C, W	D	S	P, R	DAL,MSI,OHM,SOA
M55342^02@590#&	590	25 (char. E, H) or 50 (char. K, M)	E, H, K, M	B, C, W	D	S	P, R	DAL,MSI,OHM,SOA
M55342^02@604#&	604	25 (char. E, H) or 50 (char. K, M)	E, H, K, M	B, C, W	D	S	P, R	DAL,MSI,OHM,SOA
M55342^02@619#&	619	25 (char. E, H) or 50 (char. K, M)	E, H, K, M	B, C, W	D	S	P, R	DAL,MSI,OHM,SOA
M55342^02@620#&	620	25 (char. E, H) or 50 (char. K, M)	E, H, K, M	B, C, W	G, J	S	P, R	DAL,MSI,OHM,SOA
M55342^02@634#&	634	25 (char. E, H) or 50 (char. K, M)	E, H, K, M	B, C, W	D	S	P, R	DAL,MSI,OHM,SOA
M55342^02@649#&	649	25 (char. E, H) or 50 (char. K, M)	E, H, K, M	B, C, W	D	S	P, R	DAL,MSI,OHM,SOA
M55342^02@665#&	665	25 (char. E, H) or 50 (char. K, M)	E, H, K, M	B, C, W	D	S	P, R	DAL,MSI,OHM,SOA
M55342^02@680#&	680	25 (char. E, H) or 50 (char. K, M)	E, H, K, M	B, C, W	G, J, M	S	P, R	DAL,MSI,OHM,SOA
M55342^02@681#&	681	25 (char. E, H) or 50 (char. K, M)	E, H, K, M	B, C, W	D	S	P, R	DAL,MSI,OHM,SOA
M55342^02@698#&	698	25 (char. E, H) or 50 (char. K, M)	E, H, K, M	B, C, W	D	S	P, R	DAL,MSI,OHM,SOA
M55342^02@715#&	715	25 (char. E, H) or 50 (char. K, M)	E, H, K, M	B, C, W	D	S	P, R	DAL,MSI,OHM,SOA
M55342^02@732#&	732	25 (char. E, H) or 50 (char. K, M)	E, H, K, M	B, C, W	D	S	P, R	DAL,MSI,OHM,SOA
M55342^02@750#&	750	25 (char. E, H) or 50 (char. K, M)	E, H, K, M	B, C, W	D, G, J	S	P, R	DAL,MSI,OHM,SOA
M55342^02@768#&	768	25 (char. E, H) or 50 (char. K, M)	E, H, K, M	B, C, W	D	S	P, R	DAL,MSI,OHM,SOA
M55342^02@787#&	787	25 (char. E, H) or 50 (char. K, M)	E, H, K, M	B, C, W	D	S	P, R	DAL,MSI,OHM,SOA
M55342^02@806#&	806	25 (char. E, H) or 50 (char. K, M)	E, H, K, M	B, C, W	D	S	P, R	DAL,MSI,OHM,SOA
M55342^02@820#&	820	25 (char. E, H) or 50 (char. K, M)	E, H, K, M	B, C, W	G, J, M	S	P, R	DAL,MSI,OHM,SOA
M55342^02@825#&	825	25 (char. E, H) or 50 (char. K, M)	E, H, K, M	B, C, W	D	S	P, R	DAL,MSI,OHM,SOA
M55342^02@845#&	845	25 (char. E, H) or 50 (char. K, M)	E, H, K, M	B, C, W	D	S	P, R	DAL,MSI,OHM,SOA
M55342^02@866#&	866	25 (char. E, H) or 50 (char. K, M)	E, H, K, M	B, C, W	D	S	P, R	DAL,MSI,OHM,SOA
M55342^02@887#&	887	25 (char. E, H) or 50 (char. K, M)	E, H, K, M	B, C, W	D	S	P, R	DAL,MSI,OHM,SOA
M55342^02@909#&	909	25 (char. E, H) or 50 (char. K, M)	E, H, K, M	B, C, W	D	S	P, R	DAL,MSI,OHM,SOA
M55342^02@910#&	910	25 (char. E, H) or 50 (char. K, M)	E, H, K, M	B, C, W	G, J	S	P, R	DAL,MSI,OHM,SOA
M55342^02@931#&	931	25 (char. E, H) or 50 (char. K, M)	E, H, K, M	B, C, W	D	S	P, R	DAL,MSI,OHM,SOA
M55342^02@953#&	953	25 (char. E, H) or 50 (char. K, M)	E, H, K, M	B, C, W	D	S	P, R	DAL,MSI,OHM,SOA
M55342^02@976#&	976	25 (char. E, H) or 50 (char. K, M)	E, H, K, M	B, C, W	D	S	P, R	DAL,MSI,OHM,SOA
M55342^02@1#00&	1,000	25 (char. E, H) or 50 (char. K, M)	E, H, K, M	B, C, W	E, H, K, N	S	P, R	DAL,MSI,OHM,SOA
M55342^02@1#02&	1,020	25 (char. E, H) or 50 (char. K, M)	E, H, K, M	B, C, W	E	S	P, R	DAL,MSI,OHM,SOA
M55342^02@1#05&	1,050	25 (char. E, H) or 50 (char. K, M)	E, H, K, M	B, C, W	E	S	P, R	DAL,MSI,OHM,SOA
M55342^02@1#07&	1,070	25 (char. E, H) or 50 (char. K, M)	E, H, K, M	B, C, W	E	S	P, R	DAL,MSI,OHM,SOA
M55342^02@1#10&	1,100	25 (char. E, H) or 50 (char. K, M)	E, H, K, M	B, C, W	E, H, K	S	P, R	DAL,MSI,OHM,SOA
M55342^02@1#13&	1,130	25 (char. E, H) or 50 (char. K, M)	E, H, K, M	B, C, W	E	S	P, R	DAL,MSI,OHM,SOA
M55342^02@1#15&	1,150	25 (char. E, H) or 50 (char. K, M)	E, H, K, M	B, C, W	E	S	P, R	DAL,MSI,OHM,SOA
M55342^02@1#18&	1,180	25 (char. E, H) or 50 (char. K, M)	E, H, K, M	B, C, W	E	S	P, R	DAL,MSI,OHM,SOA
M55342^02@1#20&	1,200	25 (char. E, H) or 50 (char. K, M)	E, H, K, M	B, C, W	H, K, N	S	P, R	DAL,MSI,OHM,SOA
M55342^02@1#21&	1,210	25 (char. E, H) or 50 (char. K, M)	E, H, K, M	B, C, W	E	S	P, R	DAL,MSI,OHM,SOA
M55342^02@1#24&	1,240	25 (char. E, H) or 50 (char. K, M)	E, H, K, M	B, C, W	E	S	P, R	DAL,MSI,OHM,SOA
M55342^02@1#27&	1,270	25 (char. E, H) or 50 (char. K, M)	E, H, K, M	B, C, W	E	S	P, R	DAL,MSI,OHM,SOA
M55342^02@1#30&	1,300	25 (char. E, H) or 50 (char. K, M)	E, H, K, M	B, C, W	E, H, K	S	P, R	DAL,MSI,OHM,SOA
M55342^02@1#33&	1,330	25 (char. E, H) or 50 (char. K, M)	E, H, K, M	B, C, W	E	S	P, R	DAL,MSI,OHM,SOA
M55342^02@1#37&	1,370	25 (char. E, H) or 50 (char. K, M)	E, H, K, M	B, C, W	E	S	P, R	DAL,MSI,OHM,SOA
M55342^02@1#40&	1,400	25 (char. E, H) or 50 (char. K, M)	E, H, K, M	B, C, W	E	S	P, R	DAL,MSI,OHM,SOA

M55342^02@1#43&	1,430	25 (char. E, H) or 50 (char. K, M)	E, H, K, M	B, C, W	E	S	P, R	DAL,MSI,OHM,SOA
M55342^02@1#47&	1,470	25 (char. E, H) or 50 (char. K, M)	E, H, K, M	B, C, W	E	S	P, R	DAL,MSI,OHM,SOA
M55342^02@1#50&	1,500	25 (char. E, H) or 50 (char. K, M)	E, H, K, M	B, C, W	E, H, K, N	S	P, R	DAL,MSI,OHM,SOA
M55342^02@1#54&	1,540	25 (char. E, H) or 50 (char. K, M)	E, H, K, M	B, C, W	E	S	P, R	DAL,MSI,OHM,SOA
M55342^02@1#58&	1,580	25 (char. E, H) or 50 (char. K, M)	E, H, K, M	B, C, W	E	S	P, R	DAL,MSI,OHM,SOA
M55342^02@1#60&	1,600	25 (char. E, H) or 50 (char. K, M)	E, H, K, M	B, C, W	H, K	S	P, R	DAL,MSI,OHM,SOA
M55342^02@1#62&	1,620	25 (char. E, H) or 50 (char. K, M)	E, H, K, M	B, C, W	E	S	P, R	DAL,MSI,OHM,SOA
M55342^02@1#65&	1,650	25 (char. E, H) or 50 (char. K, M)	E, H, K, M	B, C, W	E	S	P, R	DAL,MSI,OHM,SOA
M55342^02@1#69&	1,690	25 (char. E, H) or 50 (char. K, M)	E, H, K, M	B, C, W	E	S	P, R	DAL,MSI,OHM,SOA
M55342^02@1#74&	1,740	25 (char. E, H) or 50 (char. K, M)	E, H, K, M	B, C, W	E	S	P, R	DAL,MSI,OHM,SOA
M55342^02@1#78&	1,780	25 (char. E, H) or 50 (char. K, M)	E, H, K, M	B, C, W	E	S	P, R	DAL,MSI,OHM,SOA
M55342^02@1#80&	1,800	25 (char. E, H) or 50 (char. K, M)	E, H, K, M	B, C, W	H, K, N	S	P, R	DAL,MSI,OHM,SOA
M55342^02@1#82&	1,820	25 (char. E, H) or 50 (char. K, M)	E, H, K, M	B, C, W	E	S	P, R	DAL,MSI,OHM,SOA
M55342^02@1#87&	1,870	25 (char. E, H) or 50 (char. K, M)	E, H, K, M	B, C, W	E	S	P, R	DAL,MSI,OHM,SOA
M55342^02@1#91&	1,910	25 (char. E, H) or 50 (char. K, M)	E, H, K, M	B, C, W	E	S	P, R	DAL,MSI,OHM,SOA
M55342^02@1#96&	1,960	25 (char. E, H) or 50 (char. K, M)	E, H, K, M	B, C, W	E	S	P, R	DAL,MSI,OHM,SOA
M55342^02@2#00&	2,000	25 (char. E, H) or 50 (char. K, M)	E, H, K, M	B, C, W	E, H, K, N	S	P, R	DAL,MSI,OHM,SOA
M55342^02@2#05&	2,050	25 (char. E, H) or 50 (char. K, M)	E, H, K, M	B, C, W	E	S	P, R	DAL,MSI,OHM,SOA
M55342^02@2#10&	2,100	25 (char. E, H) or 50 (char. K, M)	E, H, K, M	B, C, W	E	S	P, R	DAL,MSI,OHM,SOA
M55342^02@2#15&	2,150	25 (char. E, H) or 50 (char. K, M)	E, H, K, M	B, C, W	E	S	P, R	DAL,MSI,OHM,SOA
M55342^02@2#20&	2,200	25 (char. E, H) or 50 (char. K, M)	E, H, K, M	B, C, W	H, K, N	S	P, R	DAL,MSI,OHM,SOA
M55342^02@2#21&	2,210	25 (char. E, H) or 50 (char. K, M)	E, H, K, M	B, C, W	E	S	P, R	DAL,MSI,OHM,SOA
M55342^02@2#26&	2,260	25 (char. E, H) or 50 (char. K, M)	E, H, K, M	B, C, W	E	S	P, R	DAL,MSI,OHM,SOA
M55342^02@2#32&	2,320	25 (char. E, H) or 50 (char. K, M)	E, H, K, M	B, C, W	E	S	P, R	DAL,MSI,OHM,SOA
M55342^02@2#37&	2,370	25 (char. E, H) or 50 (char. K, M)	E, H, K, M	B, C, W	E	S	P, R	DAL,MSI,OHM,SOA
M55342^02@2#40&	2,400	25 (char. E, H) or 50 (char. K, M)	E, H, K, M	B, C, W	H, K	S	P, R	DAL,MSI,OHM,SOA
M55342^02@2#43&	2,430	25 (char. E, H) or 50 (char. K, M)	E, H, K, M	B, C, W	E	S	P, R	DAL,MSI,OHM,SOA
M55342^02@2#49&	2,490	25 (char. E, H) or 50 (char. K, M)	E, H, K, M	B, C, W	E	S	P, R	DAL,MSI,OHM,SOA
M55342^02@2#55&	2,550	25 (char. E, H) or 50 (char. K, M)	E, H, K, M	B, C, W	E	S	P, R	DAL,MSI,OHM,SOA
M55342^02@2#61&	2,610	25 (char. E, H) or 50 (char. K, M)	E, H, K, M	B, C, W	E	S	P, R	DAL,MSI,OHM,SOA
M55342^02@2#67&	2,670	25 (char. E, H) or 50 (char. K, M)	E, H, K, M	B, C, W	E	S	P, R	DAL,MSI,OHM,SOA
M55342^02@2#70&	2,700	25 (char. E, H) or 50 (char. K, M)	E, H, K, M	B, C, W	H, K, N	S	P, R	DAL,MSI,OHM,SOA
M55342^02@2#74&	2,740	25 (char. E, H) or 50 (char. K, M)	E, H, K, M	B, C, W	E	S	P, R	DAL,MSI,OHM,SOA
M55342^02@2#80&	2,800	25 (char. E, H) or 50 (char. K, M)	E, H, K, M	B, C, W	E	S	P, R	DAL,MSI,OHM,SOA
M55342^02@2#87&	2,870	25 (char. E, H) or 50 (char. K, M)	E, H, K, M	B, C, W	E	S	P, R	DAL,MSI,OHM,SOA
M55342^02@2#94&	2,940	25 (char. E, H) or 50 (char. K, M)	E, H, K, M	B, C, W	E	S	P, R	DAL,MSI,OHM,SOA
M55342^02@3#00&	3,000	25 (char. E, H) or 50 (char. K, M)	E, H, K, M	B, C, W	H, K	S	P, R	DAL,MSI,OHM,SOA
M55342^02@3#01&	3,010	25 (char. E, H) or 50 (char. K, M)	E, H, K, M	B, C, W	E	S	P, R	DAL,MSI,OHM,SOA
M55342^02@3#09&	3,090	25 (char. E, H) or 50 (char. K, M)	E, H, K, M	B, C, W	E	S	P, R	DAL,MSI,OHM,SOA
M55342^02@3#16&	3,160	25 (char. E, H) or 50 (char. K, M)	E, H, K, M	B, C, W	E	S	P, R	DAL,MSI,OHM,SOA
M55342^02@3#24&	3,240	25 (char. E, H) or 50 (char. K, M)	E, H, K, M	B, C, W	E	S	P, R	DAL,MSI,OHM,SOA
M55342^02@3#30&	3,300	25 (char. E, H) or 50 (char. K, M)	E, H, K, M	B, C, W	H, K, N	S	P, R	DAL,MSI,OHM,SOA
M55342^02@3#32&	3,320	25 (char. E, H) or 50 (char. K, M)	E, H, K, M	B, C, W	E	S	P, R	DAL,MSI,OHM,SOA
M55342^02@3#40&	3,400	25 (char. E, H) or 50 (char. K, M)	E, H, K, M	B, C, W	E	S	P, R	DAL,MSI,OHM,SOA
M55342^02@3#48&	3,480	25 (char. E, H) or 50 (char. K, M)	E, H, K, M	B, C, W	E	S	P, R	DAL,MSI,OHM,SOA
M55342^02@3#57&	3,570	25 (char. E, H) or 50 (char. K, M)	E, H, K, M	B, C, W	E	S	P, R	DAL,MSI,OHM,SOA
M55342^02@3#60&	3,600	25 (char. E, H) or 50 (char. K, M)	E, H, K, M	B, C, W	H, K	S	P, R	DAL,MSI,OHM,SOA

M55342^02@3#65&	3,650	25 (char. E, H) or 50 (char. K, M)	E, H, K, M	B, C, W	E	S	P, R	DAL,MSI,OHM,SOA
M55342^02@3#74&	3,740	25 (char. E, H) or 50 (char. K, M)	E, H, K, M	B, C, W	E	S	P, R	DAL,MSI,OHM,SOA
M55342^02@3#83&	3,830	25 (char. E, H) or 50 (char. K, M)	E, H, K, M	B, C, W	E	S	P, R	DAL,MSI,OHM,SOA
M55342^02@3#90&	3,900	25 (char. E, H) or 50 (char. K, M)	E, H, K, M	B, C, W	H, K, N	S	P, R	DAL,MSI,OHM,SOA
M55342^02@3#92&	3,920	25 (char. E, H) or 50 (char. K, M)	E, H, K, M	B, C, W	E	S	P, R	DAL,MSI,OHM,SOA
M55342^02@4#02&	4,020	25 (char. E, H) or 50 (char. K, M)	E, H, K, M	B, C, W	E	S	P, R	DAL,MSI,OHM,SOA
M55342^02@4#12&	4,120	25 (char. E, H) or 50 (char. K, M)	E, H, K, M	B, C, W	E	S	P, R	DAL,MSI,OHM,SOA
M55342^02@4#22&	4,220	25 (char. E, H) or 50 (char. K, M)	E, H, K, M	B, C, W	E	S	P, R	DAL,MSI,OHM,SOA
M55342^02@4#30&	4,300	25 (char. E, H) or 50 (char. K, M)	E, H, K, M	B, C, W	H, K	S	P, R	DAL,MSI,OHM,SOA
M55342^02@4#32&	4,320	25 (char. E, H) or 50 (char. K, M)	E, H, K, M	B, C, W	E	S	P, R	DAL,MSI,OHM,SOA
M55342^02@4#42&	4,420	25 (char. E, H) or 50 (char. K, M)	E, H, K, M	B, C, W	E	S	P, R	DAL,MSI,OHM,SOA
M55342^02@4#53&	4,530	25 (char. E, H) or 50 (char. K, M)	E, H, K, M	B, C, W	E	S	P, R	DAL,MSI,OHM,SOA
M55342^02@4#64&	4,640	25 (char. E, H) or 50 (char. K, M)	E, H, K, M	B, C, W	E	S	P, R	DAL,MSI,OHM,SOA
M55342^02@4#70&	4,700	25 (char. E, H) or 50 (char. K, M)	E, H, K, M	B, C, W	H, K, N	S	P, R	DAL,MSI,OHM,SOA
M55342^02@4#75&	4,750	25 (char. E, H) or 50 (char. K, M)	E, H, K, M	B, C, W	E	S	P, R	DAL,MSI,OHM,SOA
M55342^02@4#87&	4,870	25 (char. E, H) or 50 (char. K, M)	E, H, K, M	B, C, W	E	S	P, R	DAL,MSI,OHM,SOA
M55342^02@4#99&	4,990	25 (char. E, H) or 50 (char. K, M)	E, H, K, M	B, C, W	E	S	P, R	DAL,MSI,OHM,SOA
M55342^02@5#10&	5,100	25 (char. E, H) or 50 (char. K, M)	E, H, K, M	B, C, W	H, K	S	P, R	DAL,MSI,OHM,SOA
M55342^02@5#11&	5,110	25 (char. E, H) or 50 (char. K, M)	E, H, K, M	B, C, W	E	S	P, R	DAL,MSI,OHM,SOA
M55342^02@5#23&	5,230	25 (char. E, H) or 50 (char. K, M)	E, H, K, M	B, C, W	E	S	P, R	DAL,MSI,OHM,SOA
M55342^02@5#36&	5,360	25 (char. E, H) or 50 (char. K, M)	E, H, K, M	B, C, W	E	S	P, R	DAL,MSI,OHM,SOA
M55342^02@5#49&	5,490	25 (char. E, H) or 50 (char. K, M)	E, H, K, M	B, C, W	E	S	P, R	DAL,MSI,OHM,SOA
M55342^02@5#60&	5,600	25 (char. E, H) or 50 (char. K, M)	E, H, K, M	B, C, W	H, K, N	S	P, R	DAL,MSI,OHM,SOA
M55342^02@5#62&	5,620	25 (char. E, H) or 50 (char. K, M)	E, H, K, M	B, C, W	E	S	P, R	DAL,MSI,OHM,SOA
M55342^02@5#76&	5,760	25 (char. E, H) or 50 (char. K, M)	E, H, K, M	B, C, W	E	S	P, R	DAL,MSI,OHM,SOA
M55342^02@5#90&	5,900	25 (char. E, H) or 50 (char. K, M)	E, H, K, M	B, C, W	E	S	P, R	DAL,MSI,OHM,SOA
M55342^02@6#04&	6,040	25 (char. E, H) or 50 (char. K, M)	E, H, K, M	B, C, W	E	S	P, R	DAL,MSI,OHM,SOA
M55342^02@6#19&	6,190	25 (char. E, H) or 50 (char. K, M)	E, H, K, M	B, C, W	E	S	P, R	DAL,MSI,OHM,SOA
M55342^02@6#20&	6,200	25 (char. E, H) or 50 (char. K, M)	E, H, K, M	B, C, W	H, K	S	P, R	DAL,MSI,OHM,SOA
M55342^02@6#34&	6,340	25 (char. E, H) or 50 (char. K, M)	E, H, K, M	B, C, W	E	S	P, R	DAL,MSI,OHM,SOA
M55342^02@6#49&	6,490	25 (char. E, H) or 50 (char. K, M)	E, H, K, M	B, C, W	E	S	P, R	DAL,MSI,OHM,SOA
M55342^02@6#65&	6,650	25 (char. E, H) or 50 (char. K, M)	E, H, K, M	B, C, W	E	S	P, R	DAL,MSI,OHM,SOA
M55342^02@6#80&	6,800	25 (char. E, H) or 50 (char. K, M)	E, H, K, M	B, C, W	H, K, N	S	P, R	DAL,MSI,OHM,SOA
M55342^02@6#81&	6,810	25 (char. E, H) or 50 (char. K, M)	E, H, K, M	B, C, W	E	S	P, R	DAL,MSI,OHM,SOA
M55342^02@6#98&	6,980	25 (char. E, H) or 50 (char. K, M)	E, H, K, M	B, C, W	E	S	P, R	DAL,MSI,OHM,SOA
M55342^02@7#15&	7,150	25 (char. E, H) or 50 (char. K, M)	E, H, K, M	B, C, W	E	S	P, R	DAL,MSI,OHM,SOA
M55342^02@7#32&	7,320	25 (char. E, H) or 50 (char. K, M)	E, H, K, M	B, C, W	E	S	P, R	DAL,MSI,OHM,SOA
M55342^02@7#50&	7,500	25 (char. E, H) or 50 (char. K, M)	E, H, K, M	B, C, W	E, H, K	S	P, R	DAL,MSI,OHM,SOA
M55342^02@7#68&	7,680	25 (char. E, H) or 50 (char. K, M)	E, H, K, M	B, C, W	E	S	P, R	DAL,MSI,OHM,SOA
M55342^02@7#87&	7,870	25 (char. E, H) or 50 (char. K, M)	E, H, K, M	B, C, W	E	S	P, R	DAL,MSI,OHM,SOA
M55342^02@8#06&	8,060	25 (char. E, H) or 50 (char. K, M)	E, H, K, M	B, C, W	E	S	P, R	DAL,MSI,OHM,SOA
M55342^02@8#20&	8,200	25 (char. E, H) or 50 (char. K, M)	E, H, K, M	B, C, W	H, K, N	S	P, R	DAL,MSI,OHM,SOA
M55342^02@8#25&	8,250	25 (char. E, H) or 50 (char. K, M)	E, H, K, M	B, C, W	E	S	P, R	DAL,MSI,OHM,SOA
M55342^02@8#45&	8,450	25 (char. E, H) or 50 (char. K, M)	E, H, K, M	B, C, W	E	S	P, R	DAL,MSI,OHM,SOA
M55342^02@8#66&	8,660	25 (char. E, H) or 50 (char. K, M)	E, H, K, M	B, C, W	E	S	P, R	DAL,MSI,OHM,SOA
M55342^02@8#87&	8,870	25 (char. E, H) or 50 (char. K, M)	E, H, K, M	B, C, W	E	S	P, R	DAL,MSI,OHM,SOA
M55342^02@9#09&	9,090	25 (char. E, H) or 50 (char. K, M)	E, H, K, M	B, C, W	E	S	P, R	DAL,MSI,OHM,SOA

M55342^02@9#10&	9,100	25 (char. E, H) or 50 (char. K, M)	E, H, K, M	B, C, W	H, K	S	P, R	DAL,MSI,OHM,SOA
M55342^02@9#31&	9,310	25 (char. E, H) or 50 (char. K, M)	E, H, K, M	B, C, W	E	S	P, R	DAL,MSI,OHM,SOA
M55342^02@9#53&	9,530	25 (char. E, H) or 50 (char. K, M)	E, H, K, M	B, C, W	E	S	P, R	DAL,MSI,OHM,SOA
M55342^02@9#76&	9,760	25 (char. E, H) or 50 (char. K, M)	E, H, K, M	B, C, W	E	S	P, R	DAL,MSI,OHM,SOA
M55342^02@10#0&	10,000	25 (char. E, H) or 50 (char. K, M)	E, H, K, M	B, C, W	E, H, K, N	S	P, R	DAL,MSI,OHM,SOA
M55342^02@10#2&	10,200	25 (char. E, H) or 50 (char. K, M)	E, H, K, M	B, C, W	E	S	P, R	DAL,MSI,OHM,SOA
M55342^02@10#5&	10,500	25 (char. E, H) or 50 (char. K, M)	E, H, K, M	B, C, W	E	S	P, R	DAL,MSI,OHM,SOA
M55342^02@10#7&	10,700	25 (char. E, H) or 50 (char. K, M)	E, H, K, M	B, C, W	E	S	P, R	DAL,MSI,OHM,SOA
M55342^02@11#0&	11,000	25 (char. E, H) or 50 (char. K, M)	E, H, K, M	B, C, W	E, H, K	S	P, R	DAL,MSI,OHM,SOA
M55342^02@11#3&	11,300	25 (char. E, H) or 50 (char. K, M)	E, H, K, M	B, C, W	E	S	P, R	DAL,MSI,OHM,SOA
M55342^02@11#5&	11,500	25 (char. E, H) or 50 (char. K, M)	E, H, K, M	B, C, W	E	S	P, R	DAL,MSI,OHM,SOA
M55342^02@11#8&	11,800	25 (char. E, H) or 50 (char. K, M)	E, H, K, M	B, C, W	E	S	P, R	DAL,MSI,OHM,SOA
M55342^02@12#0&	12,000	25 (char. E, H) or 50 (char. K, M)	E, H, K, M	B, C, W	H, K, N	S	P, R	DAL,MSI,OHM,SOA
M55342^02@12#1&	12,100	25 (char. E, H) or 50 (char. K, M)	E, H, K, M	B, C, W	E	S	P, R	DAL,MSI,OHM,SOA
M55342^02@12#4&	12,400	25 (char. E, H) or 50 (char. K, M)	E, H, K, M	B, C, W	E	S	P, R	DAL,MSI,OHM,SOA
M55342^02@12#7&	12,700	25 (char. E, H) or 50 (char. K, M)	E, H, K, M	B, C, W	E	S	P, R	DAL,MSI,OHM,SOA
M55342^02@13#0&	13,000	25 (char. E, H) or 50 (char. K, M)	E, H, K, M	B, C, W	E, H, K	S	P, R	DAL,MSI,OHM,SOA
M55342^02@13#3&	13,300	25 (char. E, H) or 50 (char. K, M)	E, H, K, M	B, C, W	E	S	P, R	DAL,MSI,OHM,SOA
M55342^02@13#7&	13,700	25 (char. E, H) or 50 (char. K, M)	E, H, K, M	B, C, W	E	S	P, R	DAL,MSI,OHM,SOA
M55342^02@14#0&	14,000	25 (char. E, H) or 50 (char. K, M)	E, H, K, M	B, C, W	E	S	P, R	DAL,MSI,OHM,SOA
M55342^02@14#3&	14,300	25 (char. E, H) or 50 (char. K, M)	E, H, K, M	B, C, W	E	S	P, R	DAL,MSI,OHM,SOA
M55342^02@14#7&	14,700	25 (char. E, H) or 50 (char. K, M)	E, H, K, M	B, C, W	E	S	P, R	DAL,MSI,OHM,SOA
M55342^02@15#0&	15,000	25 (char. E, H) or 50 (char. K, M)	E, H, K, M	B, C, W	E, H, K, N	S	P, R	DAL,MSI,OHM,SOA
M55342^02@15#4&	15,400	25 (char. E, H) or 50 (char. K, M)	E, H, K, M	B, C, W	E	S	P, R	DAL,MSI,OHM,SOA
M55342^02@15#8&	15,800	25 (char. E, H) or 50 (char. K, M)	E, H, K, M	B, C, W	E	S	P, R	DAL,MSI,OHM,SOA
M55342^02@16#0&	16,000	25 (char. E, H) or 50 (char. K, M)	E, H, K, M	B, C, W	H, K	S	P, R	DAL,MSI,OHM,SOA
M55342^02@16#2&	16,200	25 (char. E, H) or 50 (char. K, M)	E, H, K, M	B, C, W	E	S	P, R	DAL,MSI,OHM,SOA
M55342^02@16#5&	16,500	25 (char. E, H) or 50 (char. K, M)	E, H, K, M	B, C, W	E	S	P, R	DAL,MSI,OHM,SOA
M55342^02@16#9&	16,900	25 (char. E, H) or 50 (char. K, M)	E, H, K, M	B, C, W	E	S	P, R	DAL,MSI,OHM,SOA
M55342^02@17#4&	17,400	25 (char. E, H) or 50 (char. K, M)	E, H, K, M	B, C, W	E	S	P, R	DAL,MSI,OHM,SOA
M55342^02@17#8&	17,800	25 (char. E, H) or 50 (char. K, M)	E, H, K, M	B, C, W	E	S	P, R	DAL,MSI,OHM,SOA
M55342^02@18#0&	18,000	25 (char. E, H) or 50 (char. K, M)	E, H, K, M	B, C, W	H, K, N	S	P, R	DAL,MSI,OHM,SOA
M55342^02@18#2&	18,200	25 (char. E, H) or 50 (char. K, M)	E, H, K, M	B, C, W	E	S	P, R	DAL,MSI,OHM,SOA
M55342^02@18#7&	18,700	25 (char. E, H) or 50 (char. K, M)	E, H, K, M	B, C, W	E	S	P, R	DAL,MSI,OHM,SOA
M55342^02@19#1&	19,100	25 (char. E, H) or 50 (char. K, M)	E, H, K, M	B, C, W	E	S	P, R	DAL,MSI,OHM,SOA
M55342^02@19#6&	19,600	25 (char. E, H) or 50 (char. K, M)	E, H, K, M	B, C, W	E	S	P, R	DAL,MSI,OHM,SOA
M55342^02@20#0&	20,000	25 (char. E, H) or 50 (char. K, M)	E, H, K, M	B, C, W	E, H, K, N	S	P, R	DAL,MSI,OHM,SOA
M55342^02@20#5&	20,500	25 (char. E, H) or 50 (char. K, M)	E, H, K, M	B, C, W	E	S	P, R	DAL,MSI,OHM,SOA
M55342^02@21#0&	21,000	25 (char. E, H) or 50 (char. K, M)	E, H, K, M	B, C, W	E	S	P, R	DAL,MSI,OHM,SOA
M55342^02@21#5&	21,500	25 (char. E, H) or 50 (char. K, M)	E, H, K, M	B, C, W	E	S	P, R	DAL,MSI,OHM,SOA
M55342^02@22#0&	22,000	25 (char. E, H) or 50 (char. K, M)	E, H, K, M	B, C, W	H, K, N	S	P, R	DAL,MSI,OHM,SOA
M55342^02@22#1&	22,100	25 (char. E, H) or 50 (char. K, M)	E, H, K, M	B, C, W	E	S	P, R	DAL,MSI,OHM,SOA
M55342^02@22#6&	22,600	25 (char. E, H) or 50 (char. K, M)	E, H, K, M	B, C, W	E	S	P, R	DAL,MSI,OHM,SOA
M55342^02@23#2&	23,200	25 (char. E, H) or 50 (char. K, M)	E, H, K, M	B, C, W	E	S	P, R	DAL,MSI,OHM,SOA
M55342^02@23#7&	23,700	25 (char. E, H) or 50 (char. K, M)	E, H, K, M	B, C, W	E	S	P, R	DAL,MSI,OHM,SOA
M55342^02@24#0&	24,000	25 (char. E, H) or 50 (char. K, M)	E, H, K, M	B, C, W	H, K	S	P, R	DAL,MSI,OHM,SOA
M55342^02@24#3&	24,300	25 (char. E, H) or 50 (char. K, M)	E, H, K, M	B, C, W	E	S	P, R	DAL,MSI,OHM,SOA

M55342^02@24#9&	24,900	25 (char. E, H) or 50 (char. K, M)	E, H, K, M	B, C, W	E	S	P, R	DAL,MSI,OHM,SOA
M55342^02@25#5&	25,500	25 (char. E, H) or 50 (char. K, M)	E, H, K, M	B, C, W	E	S	P, R	DAL,MSI,OHM,SOA
M55342^02@26#1&	26,100	25 (char. E, H) or 50 (char. K, M)	E, H, K, M	B, C, W	E	S	P, R	DAL,MSI,OHM,SOA
M55342^02@26#7&	26,700	25 (char. E, H) or 50 (char. K, M)	E, H, K, M	B, C, W	E	S	P, R	DAL,MSI,OHM,SOA
M55342^02@27#0&	27,000	25 (char. E, H) or 50 (char. K, M)	E, H, K, M	B, C, W	H, K, N	S	P, R	DAL,MSI,OHM,SOA
M55342^02@27#4&	27,400	25 (char. E, H) or 50 (char. K, M)	E, H, K, M	B, C, W	E	S	P, R	DAL,MSI,OHM,SOA
M55342^02@28#0&	28,000	25 (char. E, H) or 50 (char. K, M)	E, H, K, M	B, C, W	E	S	P, R	DAL,MSI,OHM,SOA
M55342^02@28#7&	28,700	25 (char. E, H) or 50 (char. K, M)	E, H, K, M	B, C, W	E	S	P, R	DAL,MSI,OHM,SOA
M55342^02@29#4&	29,400	25 (char. E, H) or 50 (char. K, M)	E, H, K, M	B, C, W	E	S	P, R	DAL,MSI,OHM,SOA
M55342^02@30#0&	30,000	25 (char. E, H) or 50 (char. K, M)	E, H, K, M	B, C, W	H, K	S	P, R	DAL,MSI,OHM,SOA
M55342^02@30#1&	30,100	25 (char. E, H) or 50 (char. K, M)	E, H, K, M	B, C, W	E	S	P, R	DAL,MSI,OHM,SOA
M55342^02@30#9&	30,900	25 (char. E, H) or 50 (char. K, M)	E, H, K, M	B, C, W	E	S	P, R	DAL,MSI,OHM,SOA
M55342^02@31#6&	31,600	25 (char. E, H) or 50 (char. K, M)	E, H, K, M	B, C, W	E	S	P, R	DAL,MSI,OHM,SOA
M55342^02@32#4&	32,400	25 (char. E, H) or 50 (char. K, M)	E, H, K, M	B, C, W	E	S	P, R	DAL,MSI,OHM,SOA
M55342^02@33#0&	33,000	25 (char. E, H) or 50 (char. K, M)	E, H, K, M	B, C, W	H, K, N	S	P, R	DAL,MSI,OHM,SOA
M55342^02@33#2&	33,200	25 (char. E, H) or 50 (char. K, M)	E, H, K, M	B, C, W	E	S	P, R	DAL,MSI,OHM,SOA
M55342^02@34#0&	34,000	25 (char. E, H) or 50 (char. K, M)	E, H, K, M	B, C, W	E	S	P, R	DAL,MSI,OHM,SOA
M55342^02@34#8&	34,800	25 (char. E, H) or 50 (char. K, M)	E, H, K, M	B, C, W	E	S	P, R	DAL,MSI,OHM,SOA
M55342^02@35#7&	35,700	25 (char. E, H) or 50 (char. K, M)	E, H, K, M	B, C, W	E	S	P, R	DAL,MSI,OHM,SOA
M55342^02@36#0&	36,000	25 (char. E, H) or 50 (char. K, M)	E, H, K, M	B, C, W	H, K	S	P, R	DAL,MSI,OHM,SOA
M55342^02@36#5&	36,500	25 (char. E, H) or 50 (char. K, M)	E, H, K, M	B, C, W	E	S	P, R	DAL,MSI,OHM,SOA
M55342^02@37#4&	37,400	25 (char. E, H) or 50 (char. K, M)	E, H, K, M	B, C, W	E	S	P, R	DAL,MSI,OHM,SOA
M55342^02@38#3&	38,300	25 (char. E, H) or 50 (char. K, M)	E, H, K, M	B, C, W	E	S	P, R	DAL,MSI,OHM,SOA
M55342^02@39#0&	39,000	25 (char. E, H) or 50 (char. K, M)	E, H, K, M	B, C, W	H, K, N	S	P, R	DAL,MSI,OHM,SOA
M55342^02@39#2&	39,200	25 (char. E, H) or 50 (char. K, M)	E, H, K, M	B, C, W	E	S	P, R	DAL,MSI,OHM,SOA
M55342^02@40#2&	40,200	25 (char. E, H) or 50 (char. K, M)	E, H, K, M	B, C, W	E	S	P, R	DAL,MSI,OHM,SOA
M55342^02@41#2&	41,200	25 (char. E, H) or 50 (char. K, M)	E, H, K, M	B, C, W	E	S	P, R	DAL,MSI,OHM,SOA
M55342^02@42#2&	42,200	25 (char. E, H) or 50 (char. K, M)	E, H, K, M	B, C, W	E	S	P, R	DAL,MSI,OHM,SOA
M55342^02@43#0&	43,000	25 (char. E, H) or 50 (char. K, M)	E, H, K, M	B, C, W	H, K	S	P, R	DAL,MSI,OHM,SOA
M55342^02@43#2&	43,200	25 (char. E, H) or 50 (char. K, M)	E, H, K, M	B, C, W	E	S	P, R	DAL,MSI,OHM,SOA
M55342^02@44#2&	44,200	25 (char. E, H) or 50 (char. K, M)	E, H, K, M	B, C, W	E	S	P, R	DAL,MSI,OHM,SOA
M55342^02@45#3&	45,300	25 (char. E, H) or 50 (char. K, M)	E, H, K, M	B, C, W	E	S	P, R	DAL,MSI,OHM,SOA
M55342^02@46#4&	46,400	25 (char. E, H) or 50 (char. K, M)	E, H, K, M	B, C, W	E	S	P, R	DAL,MSI,OHM,SOA
M55342^02@47#0&	47,000	25 (char. E, H) or 50 (char. K, M)	E, H, K, M	B, C, W	H, K, N	S	P, R	DAL,MSI,OHM,SOA
M55342^02@47#5&	47,500	25 (char. E, H) or 50 (char. K, M)	E, H, K, M	B, C, W	E	S	P, R	DAL,MSI,OHM,SOA
M55342^02@48#7&	48,700	25 (char. E, H) or 50 (char. K, M)	E, H, K, M	B, C, W	E	S	P, R	DAL,MSI,OHM,SOA
M55342^02@49#9&	49,900	25 (char. E, H) or 50 (char. K, M)	E, H, K, M	B, C, W	E	S	P, R	DAL,MSI,OHM,SOA
M55342^02@51#0&	51,000	25 (char. E, H) or 50 (char. K, M)	E, H, K, M	B, C, W	H, K	S	P, R	DAL,MSI,OHM,SOA
M55342^02@51#1&	51,100	25 (char. E, H) or 50 (char. K, M)	E, H, K, M	B, C, W	E	S	P, R	DAL,MSI,OHM,SOA
M55342^02@52#3&	52,300	25 (char. E, H) or 50 (char. K, M)	E, H, K, M	B, C, W	E	S	P, R	DAL,MSI,OHM,SOA
M55342^02@53#6&	53,600	25 (char. E, H) or 50 (char. K, M)	E, H, K, M	B, C, W	E	S	P, R	DAL,MSI,OHM,SOA
M55342^02@54#9&	54,900	25 (char. E, H) or 50 (char. K, M)	E, H, K, M	B, C, W	E	S	P, R	DAL,MSI,OHM,SOA
M55342^02@56#0&	56,000	25 (char. E, H) or 50 (char. K, M)	E, H, K, M	B, C, W	H, K, N	S	P, R	DAL,MSI,OHM,SOA
M55342^02@56#2&	56,200	25 (char. E, H) or 50 (char. K, M)	E, H, K, M	B, C, W	E	S	P, R	DAL,MSI,OHM,SOA
M55342^02@57#6&	57,600	25 (char. E, H) or 50 (char. K, M)	E, H, K, M	B, C, W	E	S	P, R	DAL,MSI,OHM,SOA
M55342^02@59#0&	59,000	25 (char. E, H) or 50 (char. K, M)	E, H, K, M	B, C, W	E	S	P, R	DAL,MSI,OHM,SOA
M55342^02@60#4&	60,400	25 (char. E, H) or 50 (char. K, M)	E, H, K, M	B, C, W	E	S	P, R	DAL,MSI,OHM,SOA

M55342^02@61#9&	61,900	25 (char. E, H) or 50 (char. K, M)	E, H, K, M	B, C, W	E	S	P, R	DAL,MSI,OHM,SOA
M55342^02@62#0&	62,000	25 (char. E, H) or 50 (char. K, M)	E, H, K, M	B, C, W	H, K	S	P, R	DAL,MSI,OHM,SOA
M55342^02@63#4&	63,400	25 (char. E, H) or 50 (char. K, M)	E, H, K, M	B, C, W	E	S	P, R	DAL,MSI,OHM,SOA
M55342^02@64#9&	64,900	25 (char. E, H) or 50 (char. K, M)	E, H, K, M	B, C, W	E	S	P, R	DAL,MSI,OHM,SOA
M55342^02@66#5&	66,500	25 (char. E, H) or 50 (char. K, M)	E, H, K, M	B, C, W	E	S	P, R	DAL,MSI,OHM,SOA
M55342^02@68#0&	68,000	25 (char. E, H) or 50 (char. K, M)	E, H, K, M	B, C, W	H, K, N	S	P, R	DAL,MSI,OHM,SOA
M55342^02@68#1&	68,100	25 (char. E, H) or 50 (char. K, M)	E, H, K, M	B, C, W	E	S	P, R	DAL,MSI,OHM,SOA
M55342^02@69#8&	69,800	25 (char. E, H) or 50 (char. K, M)	E, H, K, M	B, C, W	E	S	P, R	DAL,MSI,OHM,SOA
M55342^02@71#5&	71,500	25 (char. E, H) or 50 (char. K, M)	E, H, K, M	B, C, W	E	S	P, R	DAL,MSI,OHM,SOA
M55342^02@73#2&	73,200	25 (char. E, H) or 50 (char. K, M)	E, H, K, M	B, C, W	E	S	P, R	DAL,MSI,OHM,SOA
M55342^02@75#0&	75,000	25 (char. E, H) or 50 (char. K, M)	E, H, K, M	B, C, W	E, H, K	S	P, R	DAL,MSI,OHM,SOA
M55342^02@76#8&	76,800	25 (char. E, H) or 50 (char. K, M)	E, H, K, M	B, C, W	E	S	P, R	DAL,MSI,OHM,SOA
M55342^02@78#7&	78,700	25 (char. E, H) or 50 (char. K, M)	E, H, K, M	B, C, W	E	S	P, R	DAL,MSI,OHM,SOA
M55342^02@80#6&	80,600	25 (char. E, H) or 50 (char. K, M)	E, H, K, M	B, C, W	E	S	P, R	DAL,MSI,OHM,SOA
M55342^02@82#0&	82,000	25 (char. E, H) or 50 (char. K, M)	E, H, K, M	B, C, W	H, K, N	S	P, R	DAL,MSI,OHM,SOA
M55342^02@82#5&	82,500	25 (char. E, H) or 50 (char. K, M)	E, H, K, M	B, C, W	E	S	P, R	DAL,MSI,OHM,SOA
M55342^02@84#5&	84,500	25 (char. E, H) or 50 (char. K, M)	E, H, K, M	B, C, W	E	S	P, R	DAL,MSI,OHM,SOA
M55342^02@86#6&	86,600	25 (char. E, H) or 50 (char. K, M)	E, H, K, M	B, C, W	E	S	P, R	DAL,MSI,OHM,SOA
M55342^02@88#7&	88,700	25 (char. E, H) or 50 (char. K, M)	E, H, K, M	B, C, W	E	S	P, R	DAL,MSI,OHM,SOA
M55342^02@90#9&	90,900	25 (char. E, H) or 50 (char. K, M)	E, H, K, M	B, C, W	E	S	P, R	DAL,MSI,OHM,SOA
M55342^02@91#0&	91,000	25 (char. E, H) or 50 (char. K, M)	E, H, K, M	B, C, W	H, K	S	P, R	DAL,MSI,OHM,SOA
M55342^02@93#1&	93,100	25 (char. E, H) or 50 (char. K, M)	E, H, K, M	B, C, W	E	S	P, R	DAL,MSI,OHM,SOA
M55342^02@95#3&	95,300	25 (char. E, H) or 50 (char. K, M)	E, H, K, M	B, C, W	E	S	P, R	DAL,MSI,OHM,SOA
M55342^02@97#6&	97,600	25 (char. E, H) or 50 (char. K, M)	E, H, K, M	B, C, W	E	S	P, R	DAL,MSI,OHM,SOA
M55342^02@100#&	100,000	25 (char. E, H) or 50 (char. K, M)	E, H, K, M	B, C, W	E, H, K, N	S	P, R	DAL,MSI,OHM,SOA
M55342^02@102#&	102,000	25 (char. E, H) or 50 (char. K, M)	E, H, K, M	B, C, W	E	S	P, R	DAL,MSI,OHM,SOA
M55342^02@105#&	105,000	25 (char. E, H) or 50 (char. K, M)	E, H, K, M	B, C, W	E	S	P, R	DAL,MSI,OHM,SOA
M55342^02@107#&	107,000	25 (char. E, H) or 50 (char. K, M)	E, H, K, M	B, C, W	E	S	P, R	DAL,MSI,OHM,SOA
M55342^02@110#&	110,000	25 (char. E, H) or 50 (char. K, M)	E, H, K, M	B, C, W	E, H, K	S	P, R	DAL,MSI,OHM,SOA
M55342^02@113#&	113,000	25 (char. E, H) or 50 (char. K, M)	E, H, K, M	B, C, W	E	S	P, R	DAL,MSI,OHM,SOA
M55342^02@115#&	115,000	25 (char. E, H) or 50 (char. K, M)	E, H, K, M	B, C, W	E	S	P, R	DAL,MSI,OHM,SOA
M55342^02@118#&	118,000	25 (char. E, H) or 50 (char. K, M)	E, H, K, M	B, C, W	E	S	P, R	DAL,MSI,OHM,SOA
M55342^02@120#&	120,000	25 (char. E, H) or 50 (char. K, M)	E, H, K, M	B, C, W	H, K, N	S	P, R	DAL,MSI,OHM,SOA
M55342^02@121#&	121,000	25 (char. E, H) or 50 (char. K, M)	E, H, K, M	B, C, W	E	S	P, R	DAL,MSI,OHM,SOA
M55342^02@124#&	124,000	25 (char. E, H) or 50 (char. K, M)	E, H, K, M	B, C, W	E	S	P, R	DAL,MSI,OHM,SOA
M55342^02@127#&	127,000	25 (char. E, H) or 50 (char. K, M)	E, H, K, M	B, C, W	E	S	P, R	DAL,MSI,OHM,SOA
M55342^02@130#&	130,000	25 (char. E, H) or 50 (char. K, M)	E, H, K, M	B, C, W	E, H, K	S	P, R	DAL,MSI,OHM,SOA
M55342^02@133#&	133,000	25 (char. E, H) or 50 (char. K, M)	E, H, K, M	B, C, W	E	S	P, R	DAL,MSI,OHM,SOA
M55342^02@137#&	137,000	25 (char. E, H) or 50 (char. K, M)	E, H, K, M	B, C, W	E	S	P, R	DAL,MSI,OHM,SOA
M55342^02@140#&	140,000	25 (char. E, H) or 50 (char. K, M)	E, H, K, M	B, C, W	E	S	P, R	DAL,MSI,OHM,SOA
M55342^02@143#&	143,000	25 (char. E, H) or 50 (char. K, M)	E, H, K, M	B, C, W	E	S	P, R	DAL,MSI,OHM,SOA
M55342^02@147#&	147,000	25 (char. E, H) or 50 (char. K, M)	E, H, K, M	B, C, W	E	S	P, R	DAL,MSI,OHM,SOA
M55342^02@150#&	150,000	25 (char. E, H) or 50 (char. K, M)	E, H, K, M	B, C, W	E, H, K, N	S	P, R	DAL,MSI,OHM,SOA
M55342^02@154#&	154,000	25 (char. E, H) or 50 (char. K, M)	E, H, K, M	B, C, W	E	S	P, R	DAL,MSI,OHM,SOA
M55342^02@158#&	158,000	25 (char. E, H) or 50 (char. K, M)	E, H, K, M	B, C, W	E	S	P, R	DAL,MSI,OHM,SOA
M55342^02@160#&	160,000	25 (char. E, H) or 50 (char. K, M)	E, H, K, M	B, C, W	H, K	S	P, R	DAL,MSI,OHM,SOA
M55342^02@162#&	162,000	25 (char. E, H) or 50 (char. K, M)	E, H, K, M	B, C, W	E	S	P, R	DAL,MSI,OHM,SOA

M55342^02@165#&	165,000	25 (char. E, H) or 50 (char. K, M)	E, H, K, M	B, C, W	E	S	P, R	DAL,MSI,OHM,SOA
M55342^02@169#&	169,000	25 (char. E, H) or 50 (char. K, M)	E, H, K, M	B, C, W	E	S	P, R	DAL,MSI,OHM,SOA
M55342^02@174#&	174,000	25 (char. E, H) or 50 (char. K, M)	E, H, K, M	B, C, W	E	S	P, R	DAL,MSI,OHM,SOA
M55342^02@178#&	178,000	25 (char. E, H) or 50 (char. K, M)	E, H, K, M	B, C, W	E	S	P, R	DAL,MSI,OHM,SOA
M55342^02@180#&	180,000	25 (char. E, H) or 50 (char. K, M)	E, H, K, M	B, C, W	H, K, N	S	P, R	DAL,MSI,OHM,SOA
M55342^02@182#&	182,000	25 (char. E, H) or 50 (char. K, M)	E, H, K, M	B, C, W	E	S	P, R	DAL,MSI,OHM,SOA
M55342^02@187#&	187,000	25 (char. E, H) or 50 (char. K, M)	E, H, K, M	B, C, W	E	S	P, R	DAL,MSI,OHM,SOA
M55342^02@191#&	191,000	25 (char. E, H) or 50 (char. K, M)	E, H, K, M	B, C, W	E	S	P, R	DAL,MSI,OHM,SOA
M55342^02@196#&	196,000	25 (char. E, H) or 50 (char. K, M)	E, H, K, M	B, C, W	E	S	P, R	DAL,MSI,OHM,SOA
M55342^02@200#&	200,000	25 (char. E, H) or 50 (char. K, M)	E, H, K, M	B, C, W	E, H, K, N	S	P, R	DAL,MSI,OHM,SOA
M55342^02@205#&	205,000	25 (char. E, H) or 50 (char. K, M)	E, H, K, M	B, C, W	E	S	P, R	DAL,MSI,OHM,SOA
M55342^02@210#&	210,000	25 (char. E, H) or 50 (char. K, M)	E, H, K, M	B, C, W	E	S	P, R	DAL,MSI,OHM,SOA
M55342^02@215#&	215,000	25 (char. E, H) or 50 (char. K, M)	E, H, K, M	B, C, W	E	S	P, R	DAL,MSI,OHM,SOA
M55342^02@220#&	220,000	25 (char. E, H) or 50 (char. K, M)	E, H, K, M	B, C, W	H, K, N	S	P, R	DAL,MSI,OHM,SOA
M55342^02@221#&	221,000	25 (char. E, H) or 50 (char. K, M)	E, H, K, M	B, C, W	E	S	P, R	DAL,MSI,OHM,SOA
M55342^02@226#&	226,000	25 (char. E, H) or 50 (char. K, M)	E, H, K, M	B, C, W	E	S	P, R	DAL,MSI,OHM,SOA
M55342^02@232#&	232,000	25 (char. E, H) or 50 (char. K, M)	E, H, K, M	B, C, W	E	S	P, R	DAL,MSI,OHM,SOA
M55342^02@237#&	237,000	25 (char. E, H) or 50 (char. K, M)	E, H, K, M	B, C, W	E	S	P, R	DAL,MSI,OHM,SOA
M55342^02@240#&	240,000	25 (char. E, H) or 50 (char. K, M)	E, H, K, M	B, C, W	H, K	S	P, R	DAL,MSI,OHM,SOA
M55342^02@243#&	243,000	25 (char. E, H) or 50 (char. K, M)	E, H, K, M	B, C, W	E	S	P, R	DAL,MSI,OHM,SOA
M55342^02@249#&	249,000	25 (char. E, H) or 50 (char. K, M)	E, H, K, M	B, C, W	E	S	P, R	DAL,MSI,OHM,SOA
M55342^02@255#&	255,000	25 (char. E, H) or 50 (char. K, M)	E, H, K, M	B, C, W	E	S	P, R	DAL,MSI,OHM,SOA
M55342^02@261#&	261,000	25 (char. E, H) or 50 (char. K, M)	E, H, K, M	B, C, W	E	S	P, R	DAL,MSI,OHM,SOA
M55342^02@267#&	267,000	25 (char. E, H) or 50 (char. K, M)	E, H, K, M	B, C, W	E	S	P, R	DAL,MSI,OHM,SOA
M55342^02@270#&	270,000	25 (char. E, H) or 50 (char. K, M)	E, H, K, M	B, C, W	H, K, N	S	P, R	DAL,MSI,OHM,SOA
M55342^02@274#&	274,000	25 (char. E, H) or 50 (char. K, M)	E, H, K, M	B, C, W	E	S	P, R	DAL,MSI,OHM,SOA
M55342^02@280#&	280,000	25 (char. E, H) or 50 (char. K, M)	E, H, K, M	B, C, W	E	S	P, R	DAL,MSI,OHM,SOA
M55342^02@287#&	287,000	25 (char. E, H) or 50 (char. K, M)	E, H, K, M	B, C, W	E	S	P, R	DAL,MSI,OHM,SOA
M55342^02@294#&	294,000	25 (char. E, H) or 50 (char. K, M)	E, H, K, M	B, C, W	E	S	P, R	DAL,MSI,OHM,SOA
M55342^02@300#&	300,000	25 (char. E, H) or 50 (char. K, M)	E, H, K, M	B, C, W	H, K	S	P, R	DAL,MSI,OHM,SOA
M55342^02@301#&	301,000	25 (char. E, H) or 50 (char. K, M)	E, H, K, M	B, C, W	E	S	P, R	DAL,MSI,OHM,SOA
M55342^02@309#&	309,000	25 (char. E, H) or 50 (char. K, M)	E, H, K, M	B, C, W	E	S	P, R	DAL,MSI,OHM,SOA
M55342^02@316#&	316,000	25 (char. E, H) or 50 (char. K, M)	E, H, K, M	B, C, W	E	S	P, R	DAL,MSI,OHM,SOA
M55342^02@324#&	324,000	25 (char. E, H) or 50 (char. K, M)	E, H, K, M	B, C, W	E	S	P, R	DAL,MSI,OHM,SOA
M55342^02@330#&	330,000	25 (char. E, H) or 50 (char. K, M)	E, H, K, M	B, C, W	H, K, N	S	P, R	DAL,MSI,OHM,SOA
M55342^02@332#&	332,000	25 (char. E, H) or 50 (char. K, M)	E, H, K, M	B, C, W	E	S	P, R	DAL,MSI,OHM,SOA
M55342^02@340#&	340,000	25 (char. E, H) or 50 (char. K, M)	E, H, K, M	B, C, W	E	S	P, R	DAL,MSI,OHM,SOA
M55342^02@348#&	348,000	25 (char. E, H) or 50 (char. K, M)	E, H, K, M	B, C, W	E	S	P, R	DAL,MSI,OHM,SOA
M55342^02@357#&	357,000	25 (char. E, H) or 50 (char. K, M)	E, H, K, M	B, C, W	E	S	P, R	DAL,MSI,OHM,SOA
M55342^02@360#&	360,000	25 (char. E, H) or 50 (char. K, M)	E, H, K, M	B, C, W	H, K	S	P, R	DAL,MSI,OHM,SOA
M55342^02@365#&	365,000	25 (char. E, H) or 50 (char. K, M)	E, H, K, M	B, C, W	E	S	P, R	DAL,MSI,OHM,SOA
M55342^02@374#&	374,000	25 (char. E, H) or 50 (char. K, M)	E, H, K, M	B, C, W	E	S	P, R	DAL,MSI,OHM,SOA
M55342^02@383#&	383,000	25 (char. E, H) or 50 (char. K, M)	E, H, K, M	B, C, W	E	S	P, R	DAL,MSI,OHM,SOA
M55342^02@390#&	390,000	25 (char. E, H) or 50 (char. K, M)	E, H, K, M	B, C, W	H, K, N	S	P, R	DAL,MSI,OHM,SOA
M55342^02@392#&	392,000	25 (char. E, H) or 50 (char. K, M)	E, H, K, M	B, C, W	E	S	P, R	DAL,MSI,OHM,SOA
M55342^02@402#&	402,000	25 (char. E, H) or 50 (char. K, M)	E, H, K, M	B, C, W	E	S	P, R	DAL,MSI,OHM,SOA
M55342^02@412#&	412,000	25 (char. E, H) or 50 (char. K, M)	E, H, K, M	B, C, W	E	S	P, R	DAL,MSI,OHM,SOA

M55342^02@422#&	422,000	25 (char. E, H) or 50 (char. K, M)	E, H, K, M	B, C, W	E	S	P, R	DAL,MSI,OHM,SOA
M55342^02@430#&	430,000	25 (char. E, H) or 50 (char. K, M)	E, H, K, M	B, C, W	H, K	S	P, R	DAL,MSI,OHM,SOA
M55342^02@432#&	432,000	25 (char. E, H) or 50 (char. K, M)	E, H, K, M	B, C, W	E	S	P, R	DAL,MSI,OHM,SOA
M55342^02@442#&	442,000	25 (char. E, H) or 50 (char. K, M)	E, H, K, M	B, C, W	E	S	P, R	DAL,MSI,OHM,SOA
M55342^02@453#&	453,000	25 (char. E, H) or 50 (char. K, M)	E, H, K, M	B, C, W	E	S	P, R	DAL,MSI,OHM,SOA
M55342^02@464#&	464,000	25 (char. E, H) or 50 (char. K, M)	E, H, K, M	B, C, W	E	S	P, R	DAL,MSI,OHM,SOA
M55342^02@470#&	470,000	25 (char. E, H) or 50 (char. K, M)	E, H, K, M	B, C, W	H, K, N	S	P, R	DAL,MSI,OHM,SOA
M55342^02@475#&	475,000	25 (char. E, H) or 50 (char. K, M)	E, H, K, M	B, C, W	E	S	P, R	MSI
M55342^02@487#&	487,000	25 (char. E, H) or 50 (char. K, M)	E, H, K, M	B, C, W	E	S	P, R	--
M55342^02@499#&	499,000	25 (char. E, H) or 50 (char. K, M)	E, H, K, M	B, C, W	E	S	P, R	--
M55342^02@510#&	510,000	25 (char. E, H) or 50 (char. K, M)	E, H, K, M	B, C, W	H, K	S	P, R	--
M55342^02@511#&	511,000	25 (char. E, H) or 50 (char. K, M)	E, H, K, M	B, C, W	E	S	P, R	--
M55342^02@523#&	523,000	25 (char. E, H) or 50 (char. K, M)	E, H, K, M	B, C, W	E	S	P, R	--
M55342^02@536#&	536,000	25 (char. E, H) or 50 (char. K, M)	E, H, K, M	B, C, W	E	S	P, R	--
M55342^02@549#&	549,000	25 (char. E, H) or 50 (char. K, M)	E, H, K, M	B, C, W	E	S	P, R	--
M55342^02@560#&	560,000	25 (char. E, H) or 50 (char. K, M)	E, H, K, M	B, C, W	H, K, N	S	P, R	--
M55342^02@562#&	562,000	25 (char. E, H) or 50 (char. K, M)	E, H, K, M	B, C, W	E	S	P, R	--
M55342^02@576#&	576,000	25 (char. E, H) or 50 (char. K, M)	E, H, K, M	B, C, W	E	S	P, R	--
M55342^02@590#&	590,000	25 (char. E, H) or 50 (char. K, M)	E, H, K, M	B, C, W	E	S	P, R	--
M55342^02@604#&	604,000	25 (char. E, H) or 50 (char. K, M)	E, H, K, M	B, C, W	E	S	P, R	--
M55342^02@619#&	619,000	25 (char. E, H) or 50 (char. K, M)	E, H, K, M	B, C, W	E	S	P, R	--
M55342^02@620#&	620,000	25 (char. E, H) or 50 (char. K, M)	E, H, K, M	B, C, W	H, K	S	P, R	--
M55342^02@634#&	634,000	25 (char. E, H) or 50 (char. K, M)	E, H, K, M	B, C, W	E	S	P, R	--
M55342^02@649#&	649,000	25 (char. E, H) or 50 (char. K, M)	E, H, K, M	B, C, W	E	S	P, R	--
M55342^02@665#&	665,000	25 (char. E, H) or 50 (char. K, M)	E, H, K, M	B, C, W	E	S	P, R	--
M55342^02@680#&	680,000	25 (char. E, H) or 50 (char. K, M)	E, H, K, M	B, C, W	H, K, N	S	P, R	--
M55342^02@681#&	681,000	25 (char. E, H) or 50 (char. K, M)	E, H, K, M	B, C, W	E	S	P, R	--
M55342^02@698#&	698,000	25 (char. E, H) or 50 (char. K, M)	E, H, K, M	B, C, W	E	S	P, R	--
M55342^02@715#&	715,000	25 (char. E, H) or 50 (char. K, M)	E, H, K, M	B, C, W	E	S	P, R	--
M55342^02@732#&	732,000	25 (char. E, H) or 50 (char. K, M)	E, H, K, M	B, C, W	E	S	P, R	--
M55342^02@750#&	750,000	25 (char. E, H) or 50 (char. K, M)	E, H, K, M	B, C, W	E, H, K	S	P, R	--
M55342^02@768#&	768,000	25 (char. E, H) or 50 (char. K, M)	E, H, K, M	B, C, W	E	S	P, R	--
M55342^02@787#&	787,000	25 (char. E, H) or 50 (char. K, M)	E, H, K, M	B, C, W	E	S	P, R	--
M55342^02@806#&	806,000	25 (char. E, H) or 50 (char. K, M)	E, H, K, M	B, C, W	E	S	P, R	--
M55342^02@820#&	820,000	25 (char. E, H) or 50 (char. K, M)	E, H, K, M	B, C, W	H, K, N	S	P, R	--
M55342^02@825#&	825,000	25 (char. E, H) or 50 (char. K, M)	E, H, K, M	B, C, W	E	S	P, R	--
M55342^02@845#&	845,000	25 (char. E, H) or 50 (char. K, M)	E, H, K, M	B, C, W	E	S	P, R	--
M55342^02@866#&	866,000	25 (char. E, H) or 50 (char. K, M)	E, H, K, M	B, C, W	E	S	P, R	--
M55342^02@887#&	887,000	25 (char. E, H) or 50 (char. K, M)	E, H, K, M	B, C, W	E	S	P, R	--
M55342^02@909#&	909,000	25 (char. E, H) or 50 (char. K, M)	E, H, K, M	B, C, W	E	S	P, R	--
M55342^02@910#&	910,000	25 (char. E, H) or 50 (char. K, M)	E, H, K, M	B, C, W	H, K	S	P, R	--
M55342^02@931#&	931,000	25 (char. E, H) or 50 (char. K, M)	E, H, K, M	B, C, W	E	S	P, R	--
M55342^02@953#&	953,000	25 (char. E, H) or 50 (char. K, M)	E, H, K, M	B, C, W	E	S	P, R	--
M55342^02@976#&	976,000	25 (char. E, H) or 50 (char. K, M)	E, H, K, M	B, C, W	E	S	P, R	--
M55342^02@100#&	1,000,000	25 (char. E, H) or 50 (char. K, M)	E, H, K, M	B, C, W	E, T, L, P	S	P, R	--

RM0505 RESISTORS

DECADE BREAKDOWN

Click on the link below to see the associated parts selection listing:

Resistance Range
5.60 Ohms through 9.76 Ohms
10.0 Ohms through 97.6 Ohms
100 Ohms through 976 Ohms
1,000 Ohms through 9,760 Ohms
10,000 Ohms through 97,600 Ohms
100,000 Ohms through 1,000,000 Ohms

MIL-PRF-55342/2 (RM0505) Film Chip Resistors: 5.6 Ohms Through 9.76 Ohms

	Resistance	Power	Char.	Term.	Res. Tol./	Level 1	Level 2	
Part Number	Value (Ohms)	Rating (mW)	(^)	Type (@)	Multiplier (#)	FRL (&)	FRL (&)	Manufacturer
M55342^02@5#60&	5.60	25 (char. E, H) or 50 (char. K, M)	E, H, K, M	B, C, W	G, J, M	S, T	P, R	DAL,MSI,SOA
M55342^02@5#62&	5.62	25 (char. E, H) or 50 (char. K, M)	E, H, K, M	B, C, W	D	S, T	P, R	DAL,MSI,SOA
M55342^02@5#76&	5.76	25 (char. E, H) or 50 (char. K, M)	E, H, K, M	B, C, W	D	S, T	P, R	DAL,MSI,SOA
M55342^02@5#90&	5.90	25 (char. E, H) or 50 (char. K, M)	E, H, K, M	B, C, W	D	S, T	P, R	DAL,MSI,SOA
M55342^02@6#04&	6.04	25 (char. E, H) or 50 (char. K, M)	E, H, K, M	B, C, W	D	S, T	P, R	DAL,MSI,SOA
M55342^02@6#19&	6.19	25 (char. E, H) or 50 (char. K, M)	E, H, K, M	B, C, W	D	S, T	P, R	DAL,MSI,SOA
M55342^02@6#20&	6.20	25 (char. E, H) or 50 (char. K, M)	E, H, K, M	B, C, W	G, J	S, T	P, R	DAL,MSI,SOA
M55342^02@6#34&	6.34	25 (char. E, H) or 50 (char. K, M)	E, H, K, M	B, C, W	D	S, T	P, R	DAL,MSI,SOA
M55342^02@6#49&	6.49	25 (char. E, H) or 50 (char. K, M)	E, H, K, M	B, C, W	D	S, T	P, R	DAL,MSI,SOA
M55342^02@6#65&	6.65	25 (char. E, H) or 50 (char. K, M)	E, H, K, M	B, C, W	D	S, T	P, R	DAL,MSI,SOA
M55342^02@6#80&	6.80	25 (char. E, H) or 50 (char. K, M)	E, H, K, M	B, C, W	G, J, M	S, T	P, R	DAL,MSI,SOA
M55342^02@6#81&	6.81	25 (char. E, H) or 50 (char. K, M)	E, H, K, M	B, C, W	D	S, T	P, R	DAL,MSI,SOA
M55342^02@6#98&	6.98	25 (char. E, H) or 50 (char. K, M)	E, H, K, M	B, C, W	D	S, T	P, R	DAL,MSI,SOA
M55342^02@7#15&	7.15	25 (char. E, H) or 50 (char. K, M)	E, H, K, M	B, C, W	D	S, T	P, R	DAL,MSI,SOA
	Resistance	Power	Char.	Term.	Res. Tol./	Level 1	Level 2	
Part Number	Value (Ohms)	Rating (mW)	(^)	Type (@)	Multiplier (#)	FRL (&)	FRL (&)	Manufacturer
M55342^02@7#32&	7.32	25 (char. E, H) or 50 (char. K, M)	E, H, K, M	B, C, W	D	S, T	P, R	DAL,MSI,SOA
M55342^02@7#50&	7.50	25 (char. E, H) or 50 (char. K, M)	E, H, K, M	B, C, W	D, G, J	S, T	P, R	DAL,MSI,SOA
M55342^02@7#68&	7.68	25 (char. E, H) or 50 (char. K, M)	E, H, K, M	B, C, W	D	S, T	P, R	DAL,MSI,SOA
M55342^02@7#87&	7.87	25 (char. E, H) or 50 (char. K, M)	E, H, K, M	B, C, W	D	S, T	P, R	DAL,MSI,SOA
M55342^02@8#06&	8.06	25 (char. E, H) or 50 (char. K, M)	E, H, K, M	B, C, W	D	S, T	P, R	DAL,MSI,SOA
M55342^02@8#20&	8.20	25 (char. E, H) or 50 (char. K, M)	E, H, K, M	B, C, W	G, J, M	S, T	P, R	DAL,MSI,SOA
M55342^02@8#25&	8.25	25 (char. E, H) or 50 (char. K, M)	E, H, K, M	B, C, W	D	S, T	P, R	DAL,MSI,SOA
M55342^02@8#45&	8.45	25 (char. E, H) or 50 (char. K, M)	E, H, K, M	B, C, W	D	S, T	P, R	DAL,MSI,SOA
M55342^02@8#66&	8.66	25 (char. E, H) or 50 (char. K, M)	E, H, K, M	B, C, W	D	S, T	P, R	DAL,MSI,SOA
M55342^02@8#87&	8.87	25 (char. E, H) or 50 (char. K, M)	E, H, K, M	B, C, W	D	S, T	P, R	DAL,MSI,SOA
M55342^02@9#09&	9.09	25 (char. E, H) or 50 (char. K, M)	E, H, K, M	B, C, W	D	S, T	P, R	DAL,MSI,SOA
M55342^02@9#10&	9.10	25 (char. E, H) or 50 (char. K, M)	E, H, K, M	B, C, W	G, J	S, T	P, R	DAL,MSI,SOA

M55342^02@9#31&	9.31	25 (char. E, H) or 50 (char. K, M)	E, H, K, M	B, C, W	D	S, T	P, R	DAL,MSI,SOA
M55342^02@9#53&	9.53	25 (char. E, H) or 50 (char. K, M)	E, H, K, M	B, C, W	D	S, T	P, R	DAL,MSI,SOA
M55342^02@9#76&	9.76	25 (char. E, H) or 50 (char. K, M)	E, H, K, M	B, C, W	D	S, T	P, R	DAL,MSI,SOA
	Resistance	Power	Char.	Term.	Res. Tol./	Level 1	Level 2	
Part Number	Value (Ohms)	Rating (mW)	(^)	Type (@)	Multiplier (#)	FRL (&)	FRL (&)	Manufacturer

MIL-PRF-55342/2 (RM0505) Film Chip Resistors: 10.0 Ohms Through 97.6 Ohms

	Resistance	Power	Char.	Term.	Res. Tol./	Level 1	Level 2	
Part Number	Value (Ohms)	Rating (mW)	(^)	Type (@)	Multiplier (#)	FRL (&)	FRL (&)	Manufacturer
M55342^02@10#0&	10.0	25 (char. E, H) or 50 (char. K, M)	E, H, K, M	B, C, W	D, G, J, M	S, T	P, R	DAL,MSI,SOA
M55342^02@10#2&	10.2	25 (char. E, H) or 50 (char. K, M)	E, H, K, M	B, C, W	D	S, T	P, R	DAL,MSI,SOA
M55342^02@10#5&	10.5	25 (char. E, H) or 50 (char. K, M)	E, H, K, M	B, C, W	D	S, T	P, R	DAL,MSI,SOA
M55342^02@10#7&	10.7	25 (char. E, H) or 50 (char. K, M)	E, H, K, M	B, C, W	D	S, T	P, R	DAL,MSI,SOA
M55342^02@11#0&	11.0	25 (char. E, H) or 50 (char. K, M)	E, H, K, M	B, C, W	D, G, J	S, T	P, R	DAL,MSI,SOA
M55342^02@11#3&	11.3	25 (char. E, H) or 50 (char. K, M)	E, H, K, M	B, C, W	D	S, T	P, R	DAL,MSI,SOA
M55342^02@11#5&	11.5	25 (char. E, H) or 50 (char. K, M)	E, H, K, M	B, C, W	D	S, T	P, R	DAL,MSI,SOA
M55342^02@11#8&	11.8	25 (char. E, H) or 50 (char. K, M)	E, H, K, M	B, C, W	D	S, T	P, R	DAL,MSI,SOA
M55342^02@12#0&	12.0	25 (char. E, H) or 50 (char. K, M)	E, H, K, M	B, C, W	G, J, M	S, T	P, R	DAL,MSI,SOA
	Resistance	Power	Char.	Term.	Res. Tol./	Level 1	Level 2	
Part Number	Value (Ohms)	Rating (mW)	(^)	Type (@)	Multiplier (#)	FRL (&)	FRL (&)	Manufacturer
M55342^02@12#1&	12.1	25 (char. E, H) or 50 (char. K, M)	E, H, K, M	B, C, W	D	S, T	P, R	DAL,MSI,SOA
M55342^02@12#4&	12.4	25 (char. E, H) or 50 (char. K, M)	E, H, K, M	B, C, W	D	S, T	P, R	DAL,MSI,SOA
M55342^02@12#7&	12.7	25 (char. E, H) or 50 (char. K, M)	E, H, K, M	B, C, W	D	S, T	P, R	DAL,MSI,SOA
M55342^02@13#0&	13.0	25 (char. E, H) or 50 (char. K, M)	E, H, K, M	B, C, W	D, G, J	S, T	P, R	DAL,MSI,SOA
M55342^02@13#3&	13.3	25 (char. E, H) or 50 (char. K, M)	E, H, K, M	B, C, W	D	S, T	P, R	DAL,MSI,SOA
M55342^02@13#7&	13.7	25 (char. E, H) or 50 (char. K, M)	E, H, K, M	B, C, W	D	S, T	P, R	DAL,MSI,SOA
M55342^02@14#0&	14.0	25 (char. E, H) or 50 (char. K, M)	E, H, K, M	B, C, W	D	S, T	P, R	DAL,MSI,SOA
M55342^02@14#3&	14.3	25 (char. E, H) or 50 (char. K, M)	E, H, K, M	B, C, W	D	S, T	P, R	DAL,MSI,SOA
M55342^02@14#7&	14.7	25 (char. E, H) or 50 (char. K, M)	E, H, K, M	B, C, W	D	S, T	P, R	DAL,MSI,SOA
	Resistance	Power	Char.	Term.	Res. Tol./	Level 1	Level 2	
Part Number	Value (Ohms)	Rating (mW)	(^)	Type (@)	Multiplier (#)	FRL (&)	FRL (&)	Manufacturer
M55342^02@15#0&	15.0	25 (char. E, H) or 50 (char. K, M)	E, H, K, M	B, C, W	D, G, J, M	S, T	P, R	DAL,MSI,SOA
M55342^02@15#4&	15.4	25 (char. E, H) or 50 (char. K, M)	E, H, K, M	B, C, W	D	S, T	P, R	DAL,MSI,SOA
M55342^02@15#8&	15.8	25 (char. E, H) or 50 (char. K, M)	E, H, K, M	B, C, W	D	S, T	P, R	DAL,MSI,SOA
M55342^02@16#0&	16.0	25 (char. E, H) or 50 (char. K, M)	E, H, K, M	B, C, W	G, J	S, T	P, R	DAL,MSI,SOA
M55342^02@16#2&	16.2	25 (char. E, H) or 50 (char. K, M)	E, H, K, M	B, C, W	D	S, T	P, R	DAL,MSI,SOA
M55342^02@16#5&	16.5	25 (char. E, H) or 50 (char. K, M)	E, H, K, M	B, C, W	D	S, T	P, R	DAL,MSI,SOA
M55342^02@16#9&	16.9	25 (char. E, H) or 50 (char. K, M)	E, H, K, M	B, C, W	D	S, T	P, R	DAL,MSI,SOA
M55342^02@17#4&	17.4	25 (char. E, H) or 50 (char. K, M)	E, H, K, M	B, C, W	D	S, T	P, R	DAL,MSI,SOA
M55342^02@17#8&	17.8	25 (char. E, H) or 50 (char. K, M)	E, H, K, M	B, C, W	D	S, T	P, R	DAL,MSI,SOA
	Resistance	Power	Char.	Term.	Res. Tol./	Level 1	Level 2	
Part Number	Value (Ohms)	Rating (mW)	(^)	Type (@)	Multiplier (#)	FRL (&)	FRL (&)	Manufacturer
M55342^02@18#0&	18.0	25 (char. E, H) or 50 (char. K, M)	E, H, K, M	B, C, W	G, J, M	S, T	P, R	DAL,MSI,SOA
M55342^02@18#2&	18.2	25 (char. E, H) or 50 (char. K, M)	E, H, K, M	B, C, W	D	S, T	P, R	DAL,MSI,SOA

M55342^02@18#7&	18.7	25 (char. E, H) or 50 (char. K, M)	E, H, K, M	B, C, W	D	S, T	P, R	DAL,MSI,SOA
M55342^02@19#1&	19.1	25 (char. E, H) or 50 (char. K, M)	E, H, K, M	B, C, W	D	S, T	P, R	DAL,MSI,SOA
M55342^02@19#6&	19.6	25 (char. E, H) or 50 (char. K, M)	E, H, K, M	B, C, W	D	S, T	P, R	DAL,MSI,SOA
M55342^02@20#0&	20.0	25 (char. E, H) or 50 (char. K, M)	E, H, K, M	B, C, W	D, G, J, M	S, T	P, R	DAL,MSI,OHM,SOA
M55342^02@20#5&	20.5	25 (char. E, H) or 50 (char. K, M)	E, H, K, M	B, C, W	D	S, T	P, R	DAL,MSI,OHM,SOA
M55342^02@21#0&	21.0	25 (char. E, H) or 50 (char. K, M)	E, H, K, M	B, C, W	D	S, T	P, R	DAL,MSI,OHM,SOA
M55342^02@21#5&	21.5	25 (char. E, H) or 50 (char. K, M)	E, H, K, M	B, C, W	D	S, T	P, R	DAL,MSI,OHM,SOA
	Resistance	Power	Char.	Term.	Res. Tol./	Level 1	Level 2	
Part Number	Value (Ohms)	Rating (mW)	(^)	Type (@)	Multiplier (#)	FRL (&)	FRL (&)	Manufacturer
M55342^02@22#0&	22.0	25 (char. E, H) or 50 (char. K, M)	E, H, K, M	B, C, W	G, J, M	S, T	P, R	DAL,MSI,OHM,SOA
M55342^02@22#1&	22.1	25 (char. E, H) or 50 (char. K, M)	E, H, K, M	B, C, W	D	S, T	P, R	DAL,MSI,OHM,SOA
M55342^02@22#6&	22.6	25 (char. E, H) or 50 (char. K, M)	E, H, K, M	B, C, W	D	S, T	P, R	DAL,MSI,OHM,SOA
M55342^02@23#2&	23.2	25 (char. E, H) or 50 (char. K, M)	E, H, K, M	B, C, W	D	S, T	P, R	DAL,MSI,OHM,SOA
M55342^02@23#7&	23.7	25 (char. E, H) or 50 (char. K, M)	E, H, K, M	B, C, W	D	S, T	P, R	DAL,MSI,OHM,SOA
M55342^02@24#0&	24.0	25 (char. E, H) or 50 (char. K, M)	E, H, K, M	B, C, W	G, J	S, T	P, R	DAL,MSI,OHM,SOA
M55342^02@24#3&	24.3	25 (char. E, H) or 50 (char. K, M)	E, H, K, M	B, C, W	D	S, T	P, R	DAL,MSI,OHM,SOA
M55342^02@24#9&	24.9	25 (char. E, H) or 50 (char. K, M)	E, H, K, M	B, C, W	D	S, T	P, R	DAL,MSI,OHM,SOA
M55342^02@25#5&	25.5	25 (char. E, H) or 50 (char. K, M)	E, H, K, M	B, C, W	D	S, T	P, R	DAL,MSI,OHM,SOA
	Resistance	Power	Char.	Term.	Res. Tol./	Level 1	Level 2	
Part Number	Value (Ohms)	Rating (mW)	(^)	Type (@)	Multiplier (#)	FRL (&)	FRL (&)	Manufacturer
M55342^02@26#1&	26.1	25 (char. E, H) or 50 (char. K, M)	E, H, K, M	B, C, W	D	S, T	P, R	DAL,MSI,OHM,SOA
M55342^02@26#7&	26.7	25 (char. E, H) or 50 (char. K, M)	E, H, K, M	B, C, W	D	S, T	P, R	DAL,MSI,OHM,SOA
M55342^02@27#0&	27.0	25 (char. E, H) or 50 (char. K, M)	E, H, K, M	B, C, W	G, J, M	S, T	P, R	DAL,MSI,OHM,SOA
M55342^02@27#4&	27.4	25 (char. E, H) or 50 (char. K, M)	E, H, K, M	B, C, W	D	S, T	P, R	DAL,MSI,OHM,SOA
M55342^02@28#0&	28.0	25 (char. E, H) or 50 (char. K, M)	E, H, K, M	B, C, W	D	S, T	P, R	DAL,MSI,OHM,SOA
M55342^02@28#7&	28.7	25 (char. E, H) or 50 (char. K, M)	E, H, K, M	B, C, W	D	S, T	P, R	DAL,MSI,OHM,SOA
M55342^02@29#4&	29.4	25 (char. E, H) or 50 (char. K, M)	E, H, K, M	B, C, W	D	S, T	P, R	DAL,MSI,OHM,SOA
M55342^02@30#0&	30.0	25 (char. E, H) or 50 (char. K, M)	E, H, K, M	B, C, W	G, J	S, T	P, R	DAL,MSI,OHM,SOA
M55342^02@30#1&	30.1	25 (char. E, H) or 50 (char. K, M)	E, H, K, M	B, C, W	D	S, T	P, R	DAL,MSI,OHM,SOA
	Resistance	Power	Char.	Term.	Res. Tol./	Level 1	Level 2	
Part Number	Value (Ohms)	Rating (mW)	(^)	Type (@)	Multiplier (#)	FRL (&)	FRL (&)	Manufacturer
M55342^02@30#9&	30.9	25 (char. E, H) or 50 (char. K, M)	E, H, K, M	B, C, W	D	S, T	P, R	DAL,MSI,OHM,SOA
M55342^02@31#6&	31.6	25 (char. E, H) or 50 (char. K, M)	E, H, K, M	B, C, W	D	S, T	P, R	DAL,MSI,OHM,SOA
M55342^02@32#4&	32.4	25 (char. E, H) or 50 (char. K, M)	E, H, K, M	B, C, W	D	S, T	P, R	DAL,MSI,OHM,SOA
M55342^02@33#0&	33.0	25 (char. E, H) or 50 (char. K, M)	E, H, K, M	B, C, W	G, J, M	S, T	P, R	DAL,MSI,OHM,SOA
M55342^02@33#2&	33.2	25 (char. E, H) or 50 (char. K, M)	E, H, K, M	B, C, W	D	S, T	P, R	DAL,MSI,OHM,SOA
M55342^02@34#0&	34.0	25 (char. E, H) or 50 (char. K, M)	E, H, K, M	B, C, W	D	S, T	P, R	DAL,MSI,OHM,SOA
M55342^02@34#8&	34.8	25 (char. E, H) or 50 (char. K, M)	E, H, K, M	B, C, W	D	S, T	P, R	DAL,MSI,OHM,SOA
M55342^02@35#7&	35.7	25 (char. E, H) or 50 (char. K, M)	E, H, K, M	B, C, W	D	S, T	P, R	DAL,MSI,OHM,SOA
M55342^02@36#0&	36.0	25 (char. E, H) or 50 (char. K, M)	E, H, K, M	B, C, W	G, J	S, T	P, R	DAL,MSI,OHM,SOA
	Resistance	Power	Char.	Term.	Res. Tol./	Level 1	Level 2	
Part Number	Value (Ohms)	Rating (mW)	(^)	Type (@)	Multiplier (#)	FRL (&)	FRL (&)	Manufacturer
M55342^02@36#5&	36.5	25 (char. E, H) or 50 (char. K, M)	E, H, K, M	B, C, W	D	S, T	P, R	DAL,MSI,OHM,SOA
M55342^02@37#4&	37.4	25 (char. E, H) or 50 (char. K, M)	E, H, K, M	B, C, W	D	S, T	P, R	DAL,MSI,OHM,SOA
M55342^02@38#3&	38.3	25 (char. E, H) or 50 (char. K, M)	E, H, K, M	B, C, W	D	S, T	P, R	DAL,MSI,OHM,SOA
M55342^02@39#0&	39.0	25 (char. E, H) or 50 (char. K, M)	E, H, K, M	B, C, W	G, J, M	S, T	P, R	DAL,MSI,OHM,SOA
M55342^02@39#2&	39.2	25 (char. E, H) or 50 (char. K, M)	E, H, K, M	B, C, W	D	S, T	P, R	DAL,MSI,OHM,SOA

M55342^02@40#2&	40.2	25 (char. E, H) or 50 (char. K, M)	E, H, K, M	B, C, W	D	S, T	P, R	DAL,MSI,OHM,SOA
M55342^02@41#2&	41.2	25 (char. E, H) or 50 (char. K, M)	E, H, K, M	B, C, W	D	S, T	P, R	DAL,MSI,OHM,SOA
M55342^02@42#2&	42.2	25 (char. E, H) or 50 (char. K, M)	E, H, K, M	B, C, W	D	S, T	P, R	DAL,MSI,OHM,SOA
M55342^02@43#0&	43.0	25 (char. E, H) or 50 (char. K, M)	E, H, K, M	B, C, W	G, J	S, T	P, R	DAL,MSI,OHM,SOA
	Resistance	Power	Char.	Term.	Res. Tol./	Level 1	Level 2	
Part Number	Value (Ohms)	Rating (mW)	(^)	Type (@)	Multiplier (#)	FRL (&)	FRL (&)	Manufacturer
M55342^02@43#2&	43.2	25 (char. E, H) or 50 (char. K, M)	E, H, K, M	B, C, W	D	S, T	P, R	DAL,MSI,OHM,SOA
M55342^02@44#2&	44.2	25 (char. E, H) or 50 (char. K, M)	E, H, K, M	B, C, W	D	S, T	P, R	DAL,MSI,OHM,SOA
M55342^02@45#3&	45.3	25 (char. E, H) or 50 (char. K, M)	E, H, K, M	B, C, W	D	S, T	P, R	DAL,MSI,OHM,SOA
M55342^02@46#4&	46.4	25 (char. E, H) or 50 (char. K, M)	E, H, K, M	B, C, W	D	S, T	P, R	DAL,MSI,OHM,SOA
M55342^02@47#0&	47.0	25 (char. E, H) or 50 (char. K, M)	E, H, K, M	B, C, W	G, J, M	S, T	P, R	DAL,MSI,OHM,SOA
M55342^02@47#5&	47.5	25 (char. E, H) or 50 (char. K, M)	E, H, K, M	B, C, W	D	S, T	P, R	DAL,MSI,OHM,SOA
M55342^02@48#7&	48.7	25 (char. E, H) or 50 (char. K, M)	E, H, K, M	B, C, W	D	S, T	P, R	DAL,MSI,OHM,SOA
M55342^02@49#9&	49.9	25 (char. E, H) or 50 (char. K, M)	E, H, K, M	B, C, W	D	S, T	P, R	DAL,MSI,OHM,SOA
M55342^02@51#0&	51.0	25 (char. E, H) or 50 (char. K, M)	E, H, K, M	B, C, W	G, J	S, T	P, R	DAL,MSI,OHM,SOA
	Resistance	Power	Char.	Term.	Res. Tol./	Level 1	Level 2	
Part Number	Value (Ohms)	Rating (mW)	(^)	Type (@)	Multiplier (#)	FRL (&)	FRL (&)	Manufacturer
M55342^02@51#1&	51.1	25 (char. E, H) or 50 (char. K, M)	E, H, K, M	B, C, W	D	S, T	P, R	DAL,MSI,OHM,SOA
M55342^02@52#3&	52.3	25 (char. E, H) or 50 (char. K, M)	E, H, K, M	B, C, W	D	S, T	P, R	DAL,MSI,OHM,SOA
M55342^02@53#6&	53.6	25 (char. E, H) or 50 (char. K, M)	E, H, K, M	B, C, W	D	S, T	P, R	DAL,MSI,OHM,SOA
M55342^02@54#9&	54.9	25 (char. E, H) or 50 (char. K, M)	E, H, K, M	B, C, W	D	S, T	P, R	DAL,MSI,OHM,SOA
M55342^02@56#0&	56.0	25 (char. E, H) or 50 (char. K, M)	E, H, K, M	B, C, W	G, J, M	S, T	P, R	DAL,MSI,OHM,SOA
M55342^02@56#2&	56.2	25 (char. E, H) or 50 (char. K, M)	E, H, K, M	B, C, W	D	S, T	P, R	DAL,MSI,OHM,SOA
M55342^02@57#6&	57.6	25 (char. E, H) or 50 (char. K, M)	E, H, K, M	B, C, W	D	S, T	P, R	DAL,MSI,OHM,SOA
M55342^02@59#0&	59.0	25 (char. E, H) or 50 (char. K, M)	E, H, K, M	B, C, W	D	S, T	P, R	DAL,MSI,OHM,SOA
M55342^02@60#4&	60.4	25 (char. E, H) or 50 (char. K, M)	E, H, K, M	B, C, W	D	S, T	P, R	DAL,MSI,OHM,SOA
	Resistance	Power	Char.	Term.	Res. Tol./	Level 1	Level 2	
Part Number	Value (Ohms)	Rating (mW)	(^)	Type (@)	Multiplier (#)	FRL (&)	FRL (&)	Manufacturer
M55342^02@61#9&	61.9	25 (char. E, H) or 50 (char. K, M)	E, H, K, M	B, C, W	D	S, T	P, R	DAL,MSI,OHM,SOA
M55342^02@62#0&	62.0	25 (char. E, H) or 50 (char. K, M)	E, H, K, M	B, C, W	G, J	S, T	P, R	DAL,MSI,OHM,SOA
M55342^02@63#4&	63.4	25 (char. E, H) or 50 (char. K, M)	E, H, K, M	B, C, W	D	S, T	P, R	DAL,MSI,OHM,SOA
M55342^02@64#9&	64.9	25 (char. E, H) or 50 (char. K, M)	E, H, K, M	B, C, W	D	S, T	P, R	DAL,MSI,OHM,SOA
M55342^02@66#5&	66.5	25 (char. E, H) or 50 (char. K, M)	E, H, K, M	B, C, W	D	S, T	P, R	DAL,MSI,OHM,SOA
M55342^02@68#0&	68.0	25 (char. E, H) or 50 (char. K, M)	E, H, K, M	B, C, W	G, J, M	S, T	P, R	DAL,MSI,OHM,SOA
M55342^02@68#1&	68.1	25 (char. E, H) or 50 (char. K, M)	E, H, K, M	B, C, W	D	S, T	P, R	DAL,MSI,OHM,SOA
M55342^02@69#8&	69.8	25 (char. E, H) or 50 (char. K, M)	E, H, K, M	B, C, W	D	S, T	P, R	DAL,MSI,OHM,SOA
M55342^02@71#5&	71.5	25 (char. E, H) or 50 (char. K, M)	E, H, K, M	B, C, W	D	S, T	P, R	DAL,MSI,OHM,SOA
	Resistance	Power	Char.	Term.	Res. Tol./	Level 1	Level 2	
Part Number	Value (Ohms)	Rating (mW)	(^)	Type (@)	Multiplier (#)	FRL (&)	FRL (&)	Manufacturer
M55342^02@73#2&	73.2	25 (char. E, H) or 50 (char. K, M)	E, H, K, M	B, C, W	D	S, T	P, R	DAL,MSI,OHM,SOA
M55342^02@75#0&	75.0	25 (char. E, H) or 50 (char. K, M)	E, H, K, M	B, C, W	D, G, J	S, T	P, R	DAL,MSI,OHM,SOA
M55342^02@76#8&	76.8	25 (char. E, H) or 50 (char. K, M)	E, H, K, M	B, C, W	D	S, T	P, R	DAL,MSI,OHM,SOA
M55342^02@78#7&	78.7	25 (char. E, H) or 50 (char. K, M)	E, H, K, M	B, C, W	D	S, T	P, R	DAL,MSI,OHM,SOA
M55342^02@80#6&	80.6	25 (char. E, H) or 50 (char. K, M)	E, H, K, M	B, C, W	D	S, T	P, R	DAL,MSI,OHM,SOA
M55342^02@82#0&	82.0	25 (char. E, H) or 50 (char. K, M)	E, H, K, M	B, C, W	G, J, M	S, T	P, R	DAL,MSI,OHM,SOA
M55342^02@82#5&	82.5	25 (char. E, H) or 50 (char. K, M)	E, H, K, M	B, C, W	D	S, T	P, R	DAL,MSI,OHM,SOA
M55342^02@84#5&	84.5	25 (char. E, H) or 50 (char. K, M)	E, H, K, M	B, C, W	D	S, T	P, R	DAL,MSI,OHM,SOA

M55342^02@86#6&	86.6	25 (char. E, H) or 50 (char. K, M)	E, H, K, M	B, C, W	D	S, T	P, R	DAL,MSI,OHM,SOA
	Resistance	Power	Char.	Term.	Res. Tol./	Level 1	Level 2	
Part Number	Value (Ohms)	Rating (mW)	(^)	Type (@)	Multiplier (#)	FRL (&)	FRL (&)	Manufacturer
M55342^02@88#7&	88.7	25 (char. E, H) or 50 (char. K, M)	E, H, K, M	B, C, W	D	S, T	P, R	DAL,MSI,OHM,SOA
M55342^02@90#9&	90.9	25 (char. E, H) or 50 (char. K, M)	E, H, K, M	B, C, W	D	S, T	P, R	DAL,MSI,OHM,SOA
M55342^02@91#0&	91.0	25 (char. E, H) or 50 (char. K, M)	E, H, K, M	B, C, W	G, J	S, T	P, R	DAL,MSI,OHM,SOA
M55342^02@93#1&	93.1	25 (char. E, H) or 50 (char. K, M)	E, H, K, M	B, C, W	D	S, T	P, R	DAL,MSI,OHM,SOA
M55342^02@95#3&	95.3	25 (char. E, H) or 50 (char. K, M)	E, H, K, M	B, C, W	D	S, T	P, R	DAL,MSI,OHM,SOA
M55342^02@97#6&	97.6	25 (char. E, H) or 50 (char. K, M)	E, H, K, M	B, C, W	D	S, T	P, R	DAL,MSI,OHM,SOA
	Resistance	Power	Char.	Term.	Res. Tol./	Level 1	Level 2	
Part Number	Value (Ohms)	Rating (mW)	(^)	Type (@)	Multiplier (#)	FRL (&)	FRL (&)	Manufacturer

MIL-PRF-55342/2 (RM0505) Film Chip Resistors: 100 Ohms Through 976 Ohms

	Resistance	Power	Char.	Term.	Res. Tol./	Level 1	Level 2	
Part Number	Value (Ohms)	Rating (mW)	(^)	Type (@)	Multiplier (#)	FRL (&)	FRL (&)	Manufacturer
M55342^02@100#&	100	25 (char. E, H) or 50 (char. K, M)	E, H, K, M	B, C, W	D, G, J, M	S, T	P, R	DAL,MSI,OHM,SOA
M55342^02@102#&	102	25 (char. E, H) or 50 (char. K, M)	E, H, K, M	B, C, W	D	S, T	P, R	DAL,MSI,OHM,SOA
M55342^02@105#&	105	25 (char. E, H) or 50 (char. K, M)	E, H, K, M	B, C, W	D	S, T	P, R	DAL,MSI,OHM,SOA
M55342^02@107#&	107	25 (char. E, H) or 50 (char. K, M)	E, H, K, M	B, C, W	D	S, T	P, R	DAL,MSI,OHM,SOA
M55342^02@110#&	110	25 (char. E, H) or 50 (char. K, M)	E, H, K, M	B, C, W	D, G, J	S, T	P, R	DAL,MSI,OHM,SOA
M55342^02@113#&	113	25 (char. E, H) or 50 (char. K, M)	E, H, K, M	B, C, W	D	S, T	P, R	DAL,MSI,OHM,SOA
M55342^02@115#&	115	25 (char. E, H) or 50 (char. K, M)	E, H, K, M	B, C, W	D	S, T	P, R	DAL,MSI,OHM,SOA
M55342^02@118#&	118	25 (char. E, H) or 50 (char. K, M)	E, H, K, M	B, C, W	D	S, T	P, R	DAL,MSI,OHM,SOA
M55342^02@120#&	120	25 (char. E, H) or 50 (char. K, M)	E, H, K, M	B, C, W	G, J, M	S, T	P, R	DAL,MSI,OHM,SOA
	Resistance	Power	Char.	Term.	Res. Tol./	Level 1	Level 2	
Part Number	Value (Ohms)	Rating (mW)	(^)	Type (@)	Multiplier (#)	FRL (&)	FRL (&)	Manufacturer
M55342^02@121#&	121	25 (char. E, H) or 50 (char. K, M)	E, H, K, M	B, C, W	D	S, T	P, R	DAL,MSI,OHM,SOA
M55342^02@124#&	124	25 (char. E, H) or 50 (char. K, M)	E, H, K, M	B, C, W	D	S, T	P, R	DAL,MSI,OHM,SOA
M55342^02@127#&	127	25 (char. E, H) or 50 (char. K, M)	E, H, K, M	B, C, W	D	S, T	P, R	DAL,MSI,OHM,SOA
M55342^02@130#&	130	25 (char. E, H) or 50 (char. K, M)	E, H, K, M	B, C, W	D, G, J	S, T	P, R	DAL,MSI,OHM,SOA
M55342^02@133#&	133	25 (char. E, H) or 50 (char. K, M)	E, H, K, M	B, C, W	D	S, T	P, R	DAL,MSI,OHM,SOA
M55342^02@137#&	137	25 (char. E, H) or 50 (char. K, M)	E, H, K, M	B, C, W	D	S, T	P, R	DAL,MSI,OHM,SOA
M55342^02@140#&	140	25 (char. E, H) or 50 (char. K, M)	E, H, K, M	B, C, W	D	S, T	P, R	DAL,MSI,OHM,SOA
M55342^02@143#&	143	25 (char. E, H) or 50 (char. K, M)	E, H, K, M	B, C, W	D	S, T	P, R	DAL,MSI,OHM,SOA
M55342^02@147#&	147	25 (char. E, H) or 50 (char. K, M)	E, H, K, M	B, C, W	D	S, T	P, R	DAL,MSI,OHM,SOA
	Resistance	Power	Char.	Term.	Res. Tol./	Level 1	Level 2	
Part Number	Value (Ohms)	Rating (mW)	(^)	Type (@)	Multiplier (#)	FRL (&)	FRL (&)	Manufacturer
M55342^02@150#&	150	25 (char. E, H) or 50 (char. K, M)	E, H, K, M	B, C, W	D, G, J, M	S, T	P, R	DAL,MSI,OHM,SOA
M55342^02@154#&	154	25 (char. E, H) or 50 (char. K, M)	E, H, K, M	B, C, W	D	S, T	P, R	DAL,MSI,OHM,SOA
M55342^02@158#&	158	25 (char. E, H) or 50 (char. K, M)	E, H, K, M	B, C, W	D	S, T	P, R	DAL,MSI,OHM,SOA
M55342^02@160#&	160	25 (char. E, H) or 50 (char. K, M)	E, H, K, M	B, C, W	G, J	S, T	P, R	DAL,MSI,OHM,SOA
M55342^02@162#&	162	25 (char. E, H) or 50 (char. K, M)	E, H, K, M	B, C, W	D	S, T	P, R	DAL,MSI,OHM,SOA
M55342^02@165#&	165	25 (char. E, H) or 50 (char. K, M)	E, H, K, M	B, C, W	D	S, T	P, R	DAL,MSI,OHM,SOA
M55342^02@169#&	169	25 (char. E, H) or 50 (char. K, M)	E, H, K, M	B, C, W	D	S, T	P, R	DAL,MSI,OHM,SOA

M55342^02@174#&	174	25 (char. E, H) or 50 (char. K, M)	E, H, K, M	B, C, W	D	S, T	P, R	DAL,MSI,OHM,SOA
M55342^02@178#&	178	25 (char. E, H) or 50 (char. K, M)	E, H, K, M	B, C, W	D	S, T	P, R	DAL,MSI,OHM,SOA
	Resistance	Power	Char.	Term.	Res. Tol./	Level 1	Level 2	
Part Number	Value (Ohms)	Rating (mW)	(^)	Type (@)	Multiplier (#)	FRL (&)	FRL (&)	Manufacturer
M55342^02@180#&	180	25 (char. E, H) or 50 (char. K, M)	E, H, K, M	B, C, W	G, J, M	S, T	P, R	DAL,MSI,OHM,SOA
M55342^02@182#&	182	25 (char. E, H) or 50 (char. K, M)	E, H, K, M	B, C, W	D	S, T	P, R	DAL,MSI,OHM,SOA
M55342^02@187#&	187	25 (char. E, H) or 50 (char. K, M)	E, H, K, M	B, C, W	D	S, T	P, R	DAL,MSI,OHM,SOA
M55342^02@191#&	191	25 (char. E, H) or 50 (char. K, M)	E, H, K, M	B, C, W	D	S, T	P, R	DAL,MSI,OHM,SOA
M55342^02@196#&	196	25 (char. E, H) or 50 (char. K, M)	E, H, K, M	B, C, W	D	S, T	P, R	DAL,MSI,OHM,SOA
M55342^02@200#&	200	25 (char. E, H) or 50 (char. K, M)	E, H, K, M	B, C, W	D, G, J, M	S, T	P, R	DAL,MSI,OHM,SOA
M55342^02@205#&	205	25 (char. E, H) or 50 (char. K, M)	E, H, K, M	B, C, W	D	S, T	P, R	DAL,MSI,OHM,SOA
M55342^02@210#&	210	25 (char. E, H) or 50 (char. K, M)	E, H, K, M	B, C, W	D	S, T	P, R	DAL,MSI,OHM,SOA
M55342^02@215#&	215	25 (char. E, H) or 50 (char. K, M)	E, H, K, M	B, C, W	D	S, T	P, R	DAL,MSI,OHM,SOA
	Resistance	Power	Char.	Term.	Res. Tol./	Level 1	Level 2	
Part Number	Value (Ohms)	Rating (mW)	(^)	Type (@)	Multiplier (#)	FRL (&)	FRL (&)	Manufacturer
M55342^02@220#&	220	25 (char. E, H) or 50 (char. K, M)	E, H, K, M	B, C, W	G, J, M	S, T	P, R	DAL,MSI,OHM,SOA
M55342^02@221#&	221	25 (char. E, H) or 50 (char. K, M)	E, H, K, M	B, C, W	D	S, T	P, R	DAL,MSI,OHM,SOA
M55342^02@226#&	226	25 (char. E, H) or 50 (char. K, M)	E, H, K, M	B, C, W	D	S, T	P, R	DAL,MSI,OHM,SOA
M55342^02@232#&	232	25 (char. E, H) or 50 (char. K, M)	E, H, K, M	B, C, W	D	S, T	P, R	DAL,MSI,OHM,SOA
M55342^02@237#&	237	25 (char. E, H) or 50 (char. K, M)	E, H, K, M	B, C, W	D	S, T	P, R	DAL,MSI,OHM,SOA
M55342^02@240#&	240	25 (char. E, H) or 50 (char. K, M)	E, H, K, M	B, C, W	G, J	S, T	P, R	DAL,MSI,OHM,SOA
M55342^02@243#&	243	25 (char. E, H) or 50 (char. K, M)	E, H, K, M	B, C, W	D	S, T	P, R	DAL,MSI,OHM,SOA
M55342^02@249#&	249	25 (char. E, H) or 50 (char. K, M)	E, H, K, M	B, C, W	D	S, T	P, R	DAL,MSI,OHM,SOA
M55342^02@255#&	255	25 (char. E, H) or 50 (char. K, M)	E, H, K, M	B, C, W	D	S, T	P, R	DAL,MSI,OHM,SOA
	Resistance	Power	Char.	Term.	Res. Tol./	Level 1	Level 2	
Part Number	Value (Ohms)	Rating (mW)	(^)	Type (@)	Multiplier (#)	FRL (&)	FRL (&)	Manufacturer
M55342^02@261#&	261	25 (char. E, H) or 50 (char. K, M)	E, H, K, M	B, C, W	D	S, T	P, R	DAL,MSI,OHM,SOA
M55342^02@267#&	267	25 (char. E, H) or 50 (char. K, M)	E, H, K, M	B, C, W	D	S, T	P, R	DAL,MSI,OHM,SOA
M55342^02@270#&	270	25 (char. E, H) or 50 (char. K, M)	E, H, K, M	B, C, W	G, J, M	S, T	P, R	DAL,MSI,OHM,SOA
M55342^02@274#&	274	25 (char. E, H) or 50 (char. K, M)	E, H, K, M	B, C, W	D	S, T	P, R	DAL,MSI,OHM,SOA
M55342^02@280#&	280	25 (char. E, H) or 50 (char. K, M)	E, H, K, M	B, C, W	D	S, T	P, R	DAL,MSI,OHM,SOA
M55342^02@287#&	287	25 (char. E, H) or 50 (char. K, M)	E, H, K, M	B, C, W	D	S, T	P, R	DAL,MSI,OHM,SOA
M55342^02@294#&	294	25 (char. E, H) or 50 (char. K, M)	E, H, K, M	B, C, W	D	S, T	P, R	DAL,MSI,OHM,SOA
M55342^02@300#&	300	25 (char. E, H) or 50 (char. K, M)	E, H, K, M	B, C, W	G, J	S, T	P, R	DAL,MSI,OHM,SOA
M55342^02@301#&	301	25 (char. E, H) or 50 (char. K, M)	E, H, K, M	B, C, W	D	S, T	P, R	DAL,MSI,OHM,SOA
	Resistance	Power	Char.	Term.	Res. Tol./	Level 1	Level 2	
Part Number	Value (Ohms)	Rating (mW)	(^)	Type (@)	Multiplier (#)	FRL (&)	FRL (&)	Manufacturer
M55342^02@309#&	309	25 (char. E, H) or 50 (char. K, M)	E, H, K, M	B, C, W	D	S, T	P, R	DAL,MSI,OHM,SOA
M55342^02@316#&	316	25 (char. E, H) or 50 (char. K, M)	E, H, K, M	B, C, W	D	S, T	P, R	DAL,MSI,OHM,SOA
M55342^02@324#&	324	25 (char. E, H) or 50 (char. K, M)	E, H, K, M	B, C, W	D	S, T	P, R	DAL,MSI,OHM,SOA
M55342^02@330#&	330	25 (char. E, H) or 50 (char. K, M)	E, H, K, M	B, C, W	G, J, M	S, T	P, R	DAL,MSI,OHM,SOA
M55342^02@332#&	332	25 (char. E, H) or 50 (char. K, M)	E, H, K, M	B, C, W	D	S, T	P, R	DAL,MSI,OHM,SOA
M55342^02@340#&	340	25 (char. E, H) or 50 (char. K, M)	E, H, K, M	B, C, W	D	S, T	P, R	DAL,MSI,OHM,SOA
M55342^02@348#&	348	25 (char. E, H) or 50 (char. K, M)	E, H, K, M	B, C, W	D	S, T	P, R	DAL,MSI,OHM,SOA
M55342^02@357#&	357	25 (char. E, H) or 50 (char. K, M)	E, H, K, M	B, C, W	D	S, T	P, R	DAL,MSI,OHM,SOA
M55342^02@360#&	360	25 (char. E, H) or 50 (char. K, M)	E, H, K, M	B, C, W	G, J	S, T	P, R	DAL,MSI,OHM,SOA
	Resistance	Power	Char.	Term.	Res. Tol./	Level 1	Level 2	

Part Number	Value (Ohms)	Rating (mW)	(^)	Type (@)	Multiplier (#)	FRL (&)	FRL (&)	Manufacturer
M55342^02@365#&	365	25 (char. E, H) or 50 (char. K, M)	E, H, K, M	B, C, W	D	S, T	P, R	DAL,MSI,OHM,SOA
M55342^02@374#&	374	25 (char. E, H) or 50 (char. K, M)	E, H, K, M	B, C, W	D	S, T	P, R	DAL,MSI,OHM,SOA
M55342^02@383#&	383	25 (char. E, H) or 50 (char. K, M)	E, H, K, M	B, C, W	D	S, T	P, R	DAL,MSI,OHM,SOA
M55342^02@390#&	390	25 (char. E, H) or 50 (char. K, M)	E, H, K, M	B, C, W	G, J, M	S, T	P, R	DAL,MSI,OHM,SOA
M55342^02@392#&	392	25 (char. E, H) or 50 (char. K, M)	E, H, K, M	B, C, W	D	S, T	P, R	DAL,MSI,OHM,SOA
M55342^02@402#&	402	25 (char. E, H) or 50 (char. K, M)	E, H, K, M	B, C, W	D	S, T	P, R	DAL,MSI,OHM,SOA
M55342^02@412#&	412	25 (char. E, H) or 50 (char. K, M)	E, H, K, M	B, C, W	D	S, T	P, R	DAL,MSI,OHM,SOA
M55342^02@422#&	422	25 (char. E, H) or 50 (char. K, M)	E, H, K, M	B, C, W	D	S, T	P, R	DAL,MSI,OHM,SOA
M55342^02@430#&	430	25 (char. E, H) or 50 (char. K, M)	E, H, K, M	B, C, W	G, J	S, T	P, R	DAL,MSI,OHM,SOA
	Resistance	Power	Char.	Term.	Res. Tol./	Level 1	Level 2	
Part Number	Value (Ohms)	Rating (mW)	(^)	Type (@)	Multiplier (#)	FRL (&)	FRL (&)	Manufacturer
M55342^02@432#&	432	25 (char. E, H) or 50 (char. K, M)	E, H, K, M	B, C, W	D	S, T	P, R	DAL,MSI,OHM,SOA
M55342^02@442#&	442	25 (char. E, H) or 50 (char. K, M)	E, H, K, M	B, C, W	D	S, T	P, R	DAL,MSI,OHM,SOA
M55342^02@453#&	453	25 (char. E, H) or 50 (char. K, M)	E, H, K, M	B, C, W	D	S, T	P, R	DAL,MSI,OHM,SOA
M55342^02@464#&	464	25 (char. E, H) or 50 (char. K, M)	E, H, K, M	B, C, W	D	S, T	P, R	DAL,MSI,OHM,SOA
M55342^02@470#&	470	25 (char. E, H) or 50 (char. K, M)	E, H, K, M	B, C, W	G, J, M	S, T	P, R	DAL,MSI,OHM,SOA
M55342^02@475#&	475	25 (char. E, H) or 50 (char. K, M)	E, H, K, M	B, C, W	D	S, T	P, R	DAL,MSI,OHM,SOA
M55342^02@487#&	487	25 (char. E, H) or 50 (char. K, M)	E, H, K, M	B, C, W	D	S, T	P, R	DAL,MSI,OHM,SOA
M55342^02@499#&	499	25 (char. E, H) or 50 (char. K, M)	E, H, K, M	B, C, W	D	S, T	P, R	DAL,MSI,OHM,SOA
M55342^02@510#&	510	25 (char. E, H) or 50 (char. K, M)	E, H, K, M	B, C, W	G, J	S, T	P, R	DAL,MSI,OHM,SOA
	Resistance	Power	Char.	Term.	Res. Tol./	Level 1	Level 2	
Part Number	Value (Ohms)	Rating (mW)	(^)	Type (@)	Multiplier (#)	FRL (&)	FRL (&)	Manufacturer
M55342^02@511#&	511	25 (char. E, H) or 50 (char. K, M)	E, H, K, M	B, C, W	D	S, T	P, R	DAL,MSI,OHM,SOA
M55342^02@523#&	523	25 (char. E, H) or 50 (char. K, M)	E, H, K, M	B, C, W	D	S, T	P, R	DAL,MSI,OHM,SOA
M55342^02@536#&	536	25 (char. E, H) or 50 (char. K, M)	E, H, K, M	B, C, W	D	S, T	P, R	DAL,MSI,OHM,SOA
M55342^02@549#&	549	25 (char. E, H) or 50 (char. K, M)	E, H, K, M	B, C, W	D	S, T	P, R	DAL,MSI,OHM,SOA
M55342^02@560#&	560	25 (char. E, H) or 50 (char. K, M)	E, H, K, M	B, C, W	G, J, M	S, T	P, R	DAL,MSI,OHM,SOA
M55342^02@562#&	562	25 (char. E, H) or 50 (char. K, M)	E, H, K, M	B, C, W	D	S, T	P, R	DAL,MSI,OHM,SOA
M55342^02@576#&	576	25 (char. E, H) or 50 (char. K, M)	E, H, K, M	B, C, W	D	S, T	P, R	DAL,MSI,OHM,SOA
M55342^02@590#&	590	25 (char. E, H) or 50 (char. K, M)	E, H, K, M	B, C, W	D	S, T	P, R	DAL,MSI,OHM,SOA
M55342^02@604#&	604	25 (char. E, H) or 50 (char. K, M)	E, H, K, M	B, C, W	D	S, T	P, R	DAL,MSI,OHM,SOA
	Resistance	Power	Char.	Term.	Res. Tol./	Level 1	Level 2	
Part Number	Value (Ohms)	Rating (mW)	(^)	Type (@)	Multiplier (#)	FRL (&)	FRL (&)	Manufacturer
M55342^02@619#&	619	25 (char. E, H) or 50 (char. K, M)	E, H, K, M	B, C, W	D	S, T	P, R	DAL,MSI,OHM,SOA
M55342^02@620#&	620	25 (char. E, H) or 50 (char. K, M)	E, H, K, M	B, C, W	G, J	S, T	P, R	DAL,MSI,OHM,SOA
M55342^02@634#&	634	25 (char. E, H) or 50 (char. K, M)	E, H, K, M	B, C, W	D	S, T	P, R	DAL,MSI,OHM,SOA
M55342^02@649#&	649	25 (char. E, H) or 50 (char. K, M)	E, H, K, M	B, C, W	D	S, T	P, R	DAL,MSI,OHM,SOA
M55342^02@665#&	665	25 (char. E, H) or 50 (char. K, M)	E, H, K, M	B, C, W	D	S, T	P, R	DAL,MSI,OHM,SOA
M55342^02@680#&	680	25 (char. E, H) or 50 (char. K, M)	E, H, K, M	B, C, W	G, J, M	S, T	P, R	DAL,MSI,OHM,SOA
M55342^02@681#&	681	25 (char. E, H) or 50 (char. K, M)	E, H, K, M	B, C, W	D	S, T	P, R	DAL,MSI,OHM,SOA
M55342^02@698#&	698	25 (char. E, H) or 50 (char. K, M)	E, H, K, M	B, C, W	D	S, T	P, R	DAL,MSI,OHM,SOA
M55342^02@715#&	715	25 (char. E, H) or 50 (char. K, M)	E, H, K, M	B, C, W	D	S, T	P, R	DAL,MSI,OHM,SOA
	Resistance	Power	Char.	Term.	Res. Tol./	Level 1	Level 2	
Part Number	Value (Ohms)	Rating (mW)	(^)	Type (@)	Multiplier (#)	FRL (&)	FRL (&)	Manufacturer
M55342^02@732#&	732	25 (char. E, H) or 50 (char. K, M)	E, H, K, M	B, C, W	D	S, T	P, R	DAL,MSI,OHM,SOA
M55342^02@750#&	750	25 (char. E, H) or 50 (char. K, M)	E, H, K, M	B, C, W	D, G, J	S, T	P, R	DAL,MSI,OHM,SOA

M55342^02@768#&	768	25 (char. E, H) or 50 (char. K, M)	E, H, K, M	B, C, W	D	S, T	P, R	DAL,MSI,OHM,SOA
M55342^02@787#&	787	25 (char. E, H) or 50 (char. K, M)	E, H, K, M	B, C, W	D	S, T	P, R	DAL,MSI,OHM,SOA
M55342^02@806#&	806	25 (char. E, H) or 50 (char. K, M)	E, H, K, M	B, C, W	D	S, T	P, R	DAL,MSI,OHM,SOA
M55342^02@820#&	820	25 (char. E, H) or 50 (char. K, M)	E, H, K, M	B, C, W	G, J, M	S, T	P, R	DAL,MSI,OHM,SOA
M55342^02@825#&	825	25 (char. E, H) or 50 (char. K, M)	E, H, K, M	B, C, W	D	S, T	P, R	DAL,MSI,OHM,SOA
M55342^02@845#&	845	25 (char. E, H) or 50 (char. K, M)	E, H, K, M	B, C, W	D	S, T	P, R	DAL,MSI,OHM,SOA
M55342^02@866#&	866	25 (char. E, H) or 50 (char. K, M)	E, H, K, M	B, C, W	D	S, T	P, R	DAL,MSI,OHM,SOA
	Resistance	Power	Char.	Term.	Res. Tol./	Level 1	Level 2	
Part Number	Value (Ohms)	Rating (mW)	(^)	Type (@)	Multiplier (#)	FRL (&)	FRL (&)	Manufacturer
M55342^02@887#&	887	25 (char. E, H) or 50 (char. K, M)	E, H, K, M	B, C, W	D	S, T	P, R	DAL,MSI,OHM,SOA
M55342^02@909#&	909	25 (char. E, H) or 50 (char. K, M)	E, H, K, M	B, C, W	D	S, T	P, R	DAL,MSI,OHM,SOA
M55342^02@910#&	910	25 (char. E, H) or 50 (char. K, M)	E, H, K, M	B, C, W	G, J	S, T	P, R	DAL,MSI,OHM,SOA
M55342^02@931#&	931	25 (char. E, H) or 50 (char. K, M)	E, H, K, M	B, C, W	D	S, T	P, R	DAL,MSI,OHM,SOA
M55342^02@953#&	953	25 (char. E, H) or 50 (char. K, M)	E, H, K, M	B, C, W	D	S, T	P, R	DAL,MSI,OHM,SOA
M55342^02@976#&	976	25 (char. E, H) or 50 (char. K, M)	E, H, K, M	B, C, W	D	S, T	P, R	DAL,MSI,OHM,SOA
	Resistance	Power	Char.	Term.	Res. Tol./	Level 1	Level 2	
Part Number	Value (Ohms)	Rating (mW)	(^)	Type (@)	Multiplier (#)	FRL (&)	FRL (&)	Manufacturer

MIL-PRF-55342/2 (RM0505) Film Chip Resistors: 1,000 Ohms Through 9,760 Ohms

	Resistance	Power	Char.	Term.	Res. Tol./	Level 1	Level 2	
Part Number	Value (Ohms)	Rating (mW)	(^)	Type (@)	Multiplier (#)	FRL (&)	FRL (&)	Manufacturer
M55342^02@1#00&	1,000	25 (char. E, H) or 50 (char. K, M)	E, H, K, M	B, C, W	E, H, K, N	S, T	P, R	DAL,MSI,OHM,SOA
M55342^02@1#02&	1,020	25 (char. E, H) or 50 (char. K, M)	E, H, K, M	B, C, W	E	S, T	P, R	DAL,MSI,OHM,SOA
M55342^02@1#05&	1,050	25 (char. E, H) or 50 (char. K, M)	E, H, K, M	B, C, W	E	S, T	P, R	DAL,MSI,OHM,SOA
M55342^02@1#07&	1,070	25 (char. E, H) or 50 (char. K, M)	E, H, K, M	B, C, W	E	S, T	P, R	DAL,MSI,OHM,SOA
M55342^02@1#10&	1,100	25 (char. E, H) or 50 (char. K, M)	E, H, K, M	B, C, W	E, H, K	S, T	P, R	DAL,MSI,OHM,SOA
M55342^02@1#13&	1,130	25 (char. E, H) or 50 (char. K, M)	E, H, K, M	B, C, W	E	S, T	P, R	DAL,MSI,OHM,SOA
M55342^02@1#15&	1,150	25 (char. E, H) or 50 (char. K, M)	E, H, K, M	B, C, W	E	S, T	P, R	DAL,MSI,OHM,SOA
M55342^02@1#18&	1,180	25 (char. E, H) or 50 (char. K, M)	E, H, K, M	B, C, W	E	S, T	P, R	DAL,MSI,OHM,SOA
M55342^02@1#20&	1,200	25 (char. E, H) or 50 (char. K, M)	E, H, K, M	B, C, W	H, K, N	S, T	P, R	DAL,MSI,OHM,SOA
	Resistance	Power	Char.	Term.	Res. Tol./	Level 1	Level 2	
Part Number	Value (Ohms)	Rating (mW)	(^)	Type (@)	Multiplier (#)	FRL (&)	FRL (&)	Manufacturer
M55342^02@1#21&	1,210	25 (char. E, H) or 50 (char. K, M)	E, H, K, M	B, C, W	E	S, T	P, R	DAL,MSI,OHM,SOA
M55342^02@1#24&	1,240	25 (char. E, H) or 50 (char. K, M)	E, H, K, M	B, C, W	E	S, T	P, R	DAL,MSI,OHM,SOA
M55342^02@1#27&	1,270	25 (char. E, H) or 50 (char. K, M)	E, H, K, M	B, C, W	E	S, T	P, R	DAL,MSI,OHM,SOA
M55342^02@1#30&	1,300	25 (char. E, H) or 50 (char. K, M)	E, H, K, M	B, C, W	E, H, K	S, T	P, R	DAL,MSI,OHM,SOA
M55342^02@1#33&	1,330	25 (char. E, H) or 50 (char. K, M)	E, H, K, M	B, C, W	E	S, T	P, R	DAL,MSI,OHM,SOA
M55342^02@1#37&	1,370	25 (char. E, H) or 50 (char. K, M)	E, H, K, M	B, C, W	E	S, T	P, R	DAL,MSI,OHM,SOA
M55342^02@1#40&	1,400	25 (char. E, H) or 50 (char. K, M)	E, H, K, M	B, C, W	E	S, T	P, R	DAL,MSI,OHM,SOA
M55342^02@1#43&	1,430	25 (char. E, H) or 50 (char. K, M)	E, H, K, M	B, C, W	E	S, T	P, R	DAL,MSI,OHM,SOA
M55342^02@1#47&	1,470	25 (char. E, H) or 50 (char. K, M)	E, H, K, M	B, C, W	E	S, T	P, R	DAL,MSI,OHM,SOA
	Resistance	Power	Char.	Term.	Res. Tol./	Level 1	Level 2	
Part Number	Value (Ohms)	Rating (mW)	(^)	Type (@)	Multiplier (#)	FRL (&)	FRL (&)	Manufacturer
M55342^02@1#50&	1,500	25 (char. E, H) or 50 (char. K, M)	E, H, K, M	B, C, W	E, H, K, N	S, T	P, R	DAL,MSI,OHM,SOA

M55342^02@1#54&	1,540	25 (char. E, H) or 50 (char. K, M)	E, H, K, M	B, C, W	E	S, T	P, R	DAL,MSI,OHM,SOA
M55342^02@1#58&	1,580	25 (char. E, H) or 50 (char. K, M)	E, H, K, M	B, C, W	E	S, T	P, R	DAL,MSI,OHM,SOA
M55342^02@1#60&	1,600	25 (char. E, H) or 50 (char. K, M)	E, H, K, M	B, C, W	H, K	S, T	P, R	DAL,MSI,OHM,SOA
M55342^02@1#62&	1,620	25 (char. E, H) or 50 (char. K, M)	E, H, K, M	B, C, W	E	S, T	P, R	DAL,MSI,OHM,SOA
M55342^02@1#65&	1,650	25 (char. E, H) or 50 (char. K, M)	E, H, K, M	B, C, W	E	S, T	P, R	DAL,MSI,OHM,SOA
M55342^02@1#69&	1,690	25 (char. E, H) or 50 (char. K, M)	E, H, K, M	B, C, W	E	S, T	P, R	DAL,MSI,OHM,SOA
M55342^02@1#74&	1,740	25 (char. E, H) or 50 (char. K, M)	E, H, K, M	B, C, W	E	S, T	P, R	DAL,MSI,OHM,SOA
M55342^02@1#78&	1,780	25 (char. E, H) or 50 (char. K, M)	E, H, K, M	B, C, W	E	S, T	P, R	DAL,MSI,OHM,SOA
	Resistance	Power	Char.	Term.	Res. Tol./	Level 1	Level 2	
Part Number	Value (Ohms)	Rating (mW)	(^)	Type (@)	Multiplier (#)	FRL (&)	FRL (&)	Manufacturer
M55342^02@1#80&	1,800	25 (char. E, H) or 50 (char. K, M)	E, H, K, M	B, C, W	H, K, N	S, T	P, R	DAL,MSI,OHM,SOA
M55342^02@1#82&	1,820	25 (char. E, H) or 50 (char. K, M)	E, H, K, M	B, C, W	E	S, T	P, R	DAL,MSI,OHM,SOA
M55342^02@1#87&	1,870	25 (char. E, H) or 50 (char. K, M)	E, H, K, M	B, C, W	E	S, T	P, R	DAL,MSI,OHM,SOA
M55342^02@1#91&	1,910	25 (char. E, H) or 50 (char. K, M)	E, H, K, M	B, C, W	E	S, T	P, R	DAL,MSI,OHM,SOA
M55342^02@1#96&	1,960	25 (char. E, H) or 50 (char. K, M)	E, H, K, M	B, C, W	E	S, T	P, R	DAL,MSI,OHM,SOA
M55342^02@2#00&	2,000	25 (char. E, H) or 50 (char. K, M)	E, H, K, M	B, C, W	E, H, K, N	S, T	P, R	DAL,MSI,OHM,SOA
M55342^02@2#05&	2,050	25 (char. E, H) or 50 (char. K, M)	E, H, K, M	B, C, W	E	S, T	P, R	DAL,MSI,OHM,SOA
M55342^02@2#10&	2,100	25 (char. E, H) or 50 (char. K, M)	E, H, K, M	B, C, W	E	S, T	P, R	DAL,MSI,OHM,SOA
M55342^02@2#15&	2,150	25 (char. E, H) or 50 (char. K, M)	E, H, K, M	B, C, W	E	S, T	P, R	DAL,MSI,OHM,SOA
	Resistance	Power	Char.	Term.	Res. Tol./	Level 1	Level 2	
Part Number	Value (Ohms)	Rating (mW)	(^)	Type (@)	Multiplier (#)	FRL (&)	FRL (&)	Manufacturer
M55342^02@2#20&	2,200	25 (char. E, H) or 50 (char. K, M)	E, H, K, M	B, C, W	H, K, N	S, T	P, R	DAL,MSI,OHM,SOA
M55342^02@2#21&	2,210	25 (char. E, H) or 50 (char. K, M)	E, H, K, M	B, C, W	E	S, T	P, R	DAL,MSI,OHM,SOA
M55342^02@2#26&	2,260	25 (char. E, H) or 50 (char. K, M)	E, H, K, M	B, C, W	E	S, T	P, R	DAL,MSI,OHM,SOA
M55342^02@2#32&	2,320	25 (char. E, H) or 50 (char. K, M)	E, H, K, M	B, C, W	E	S, T	P, R	DAL,MSI,OHM,SOA
M55342^02@2#37&	2,370	25 (char. E, H) or 50 (char. K, M)	E, H, K, M	B, C, W	E	S, T	P, R	DAL,MSI,OHM,SOA
M55342^02@2#40&	2,400	25 (char. E, H) or 50 (char. K, M)	E, H, K, M	B, C, W	H, K	S, T	P, R	DAL,MSI,OHM,SOA
M55342^02@2#43&	2,430	25 (char. E, H) or 50 (char. K, M)	E, H, K, M	B, C, W	E	S, T	P, R	DAL,MSI,OHM,SOA
M55342^02@2#49&	2,490	25 (char. E, H) or 50 (char. K, M)	E, H, K, M	B, C, W	E	S, T	P, R	DAL,MSI,OHM,SOA
M55342^02@2#55&	2,550	25 (char. E, H) or 50 (char. K, M)	E, H, K, M	B, C, W	E	S, T	P, R	DAL,MSI,OHM,SOA
	Resistance	Power	Char.	Term.	Res. Tol./	Level 1	Level 2	
Part Number	Value (Ohms)	Rating (mW)	(^)	Type (@)	Multiplier (#)	FRL (&)	FRL (&)	Manufacturer
M55342^02@2#61&	2,610	25 (char. E, H) or 50 (char. K, M)	E, H, K, M	B, C, W	E	S, T	P, R	DAL,MSI,OHM,SOA
M55342^02@2#67&	2,670	25 (char. E, H) or 50 (char. K, M)	E, H, K, M	B, C, W	E	S, T	P, R	DAL,MSI,OHM,SOA
M55342^02@2#70&	2,700	25 (char. E, H) or 50 (char. K, M)	E, H, K, M	B, C, W	H, K, N	S, T	P, R	DAL,MSI,OHM,SOA
M55342^02@2#74&	2,740	25 (char. E, H) or 50 (char. K, M)	E, H, K, M	B, C, W	E	S, T	P, R	DAL,MSI,OHM,SOA
M55342^02@2#80&	2,800	25 (char. E, H) or 50 (char. K, M)	E, H, K, M	B, C, W	E	S, T	P, R	DAL,MSI,OHM,SOA
M55342^02@2#87&	2,870	25 (char. E, H) or 50 (char. K, M)	E, H, K, M	B, C, W	E	S, T	P, R	DAL,MSI,OHM,SOA
M55342^02@2#94&	2,940	25 (char. E, H) or 50 (char. K, M)	E, H, K, M	B, C, W	E	S, T	P, R	DAL,MSI,OHM,SOA
M55342^02@3#00&	3,000	25 (char. E, H) or 50 (char. K, M)	E, H, K, M	B, C, W	H, K	S, T	P, R	DAL,MSI,OHM,SOA
M55342^02@3#01&	3,010	25 (char. E, H) or 50 (char. K, M)	E, H, K, M	B, C, W	E	S, T	P, R	DAL,MSI,OHM,SOA
	Resistance	Power	Char.	Term.	Res. Tol./	Level 1	Level 2	
Part Number	Value (Ohms)	Rating (mW)	(^)	Type (@)	Multiplier (#)	FRL (&)	FRL (&)	Manufacturer
M55342^02@3#09&	3,090	25 (char. E, H) or 50 (char. K, M)	E, H, K, M	B, C, W	E	S, T	P, R	DAL,MSI,OHM,SOA
M55342^02@3#16&	3,160	25 (char. E, H) or 50 (char. K, M)	E, H, K, M	B, C, W	E	S, T	P, R	DAL,MSI,OHM,SOA
M55342^02@3#24&	3,240	25 (char. E, H) or 50 (char. K, M)	E, H, K, M	B, C, W	E	S, T	P, R	DAL,MSI,OHM,SOA
M55342^02@3#30&	3,300	25 (char. E, H) or 50 (char. K, M)	E, H, K, M	B, C, W	H, K, N	S, T	P, R	DAL,MSI,OHM,SOA

M55342^02@3#32&	3,320	25 (char. E, H) or 50 (char. K, M)	E, H, K, M	B, C, W	E	S, T	P, R	DAL,MSI,OHM,SOA
M55342^02@3#40&	3,400	25 (char. E, H) or 50 (char. K, M)	E, H, K, M	B, C, W	E	S, T	P, R	DAL,MSI,OHM,SOA
M55342^02@3#48&	3,480	25 (char. E, H) or 50 (char. K, M)	E, H, K, M	B, C, W	E	S, T	P, R	DAL,MSI,OHM,SOA
M55342^02@3#57&	3,570	25 (char. E, H) or 50 (char. K, M)	E, H, K, M	B, C, W	E	S, T	P, R	DAL,MSI,OHM,SOA
M55342^02@3#60&	3,600	25 (char. E, H) or 50 (char. K, M)	E, H, K, M	B, C, W	H, K	S, T	P, R	DAL,MSI,OHM,SOA
	Resistance	Power	Char.	Term.	Res. Tol./	Level 1	Level 2	
Part Number	Value (Ohms)	Rating (mW)	(^)	Type (@)	Multiplier (#)	FRL (&)	FRL (&)	Manufacturer
M55342^02@3#65&	3,650	25 (char. E, H) or 50 (char. K, M)	E, H, K, M	B, C, W	E	S, T	P, R	DAL,MSI,OHM,SOA
M55342^02@3#74&	3,740	25 (char. E, H) or 50 (char. K, M)	E, H, K, M	B, C, W	E	S, T	P, R	DAL,MSI,OHM,SOA
M55342^02@3#83&	3,830	25 (char. E, H) or 50 (char. K, M)	E, H, K, M	B, C, W	E	S, T	P, R	DAL,MSI,OHM,SOA
M55342^02@3#90&	3,900	25 (char. E, H) or 50 (char. K, M)	E, H, K, M	B, C, W	H, K, N	S, T	P, R	DAL,MSI,OHM,SOA
M55342^02@3#92&	3,920	25 (char. E, H) or 50 (char. K, M)	E, H, K, M	B, C, W	E	S, T	P, R	DAL,MSI,OHM,SOA
M55342^02@4#02&	4,020	25 (char. E, H) or 50 (char. K, M)	E, H, K, M	B, C, W	E	S, T	P, R	DAL,MSI,OHM,SOA
M55342^02@4#12&	4,120	25 (char. E, H) or 50 (char. K, M)	E, H, K, M	B, C, W	E	S, T	P, R	DAL,MSI,OHM,SOA
M55342^02@4#22&	4,220	25 (char. E, H) or 50 (char. K, M)	E, H, K, M	B, C, W	E	S, T	P, R	DAL,MSI,OHM,SOA
M55342^02@4#30&	4,300	25 (char. E, H) or 50 (char. K, M)	E, H, K, M	B, C, W	H, K	S, T	P, R	DAL,MSI,OHM,SOA
	Resistance	Power	Char.	Term.	Res. Tol./	Level 1	Level 2	
Part Number	Value (Ohms)	Rating (mW)	(^)	Type (@)	Multiplier (#)	FRL (&)	FRL (&)	Manufacturer
M55342^02@4#32&	4,320	25 (char. E, H) or 50 (char. K, M)	E, H, K, M	B, C, W	E	S, T	P, R	DAL,MSI,OHM,SOA
M55342^02@4#42&	4,420	25 (char. E, H) or 50 (char. K, M)	E, H, K, M	B, C, W	E	S, T	P, R	DAL,MSI,OHM,SOA
M55342^02@4#53&	4,530	25 (char. E, H) or 50 (char. K, M)	E, H, K, M	B, C, W	E	S, T	P, R	DAL,MSI,OHM,SOA
M55342^02@4#64&	4,640	25 (char. E, H) or 50 (char. K, M)	E, H, K, M	B, C, W	E	S, T	P, R	DAL,MSI,OHM,SOA
M55342^02@4#70&	4,700	25 (char. E, H) or 50 (char. K, M)	E, H, K, M	B, C, W	H, K, N	S, T	P, R	DAL,MSI,OHM,SOA
M55342^02@4#75&	4,750	25 (char. E, H) or 50 (char. K, M)	E, H, K, M	B, C, W	E	S, T	P, R	DAL,MSI,OHM,SOA
M55342^02@4#87&	4,870	25 (char. E, H) or 50 (char. K, M)	E, H, K, M	B, C, W	E	S, T	P, R	DAL,MSI,OHM,SOA
M55342^02@4#99&	4,990	25 (char. E, H) or 50 (char. K, M)	E, H, K, M	B, C, W	E	S, T	P, R	DAL,MSI,OHM,SOA
M55342^02@5#10&	5,100	25 (char. E, H) or 50 (char. K, M)	E, H, K, M	B, C, W	H, K	S, T	P, R	DAL,MSI,OHM,SOA
	Resistance	Power	Char.	Term.	Res. Tol./	Level 1	Level 2	
Part Number	Value (Ohms)	Rating (mW)	(^)	Type (@)	Multiplier (#)	FRL (&)	FRL (&)	Manufacturer
M55342^02@5#11&	5,110	25 (char. E, H) or 50 (char. K, M)	E, H, K, M	B, C, W	E	S, T	P, R	DAL,MSI,OHM,SOA
M55342^02@5#23&	5,230	25 (char. E, H) or 50 (char. K, M)	E, H, K, M	B, C, W	E	S, T	P, R	DAL,MSI,OHM,SOA
M55342^02@5#36&	5,360	25 (char. E, H) or 50 (char. K, M)	E, H, K, M	B, C, W	E	S, T	P, R	DAL,MSI,OHM,SOA
M55342^02@5#49&	5,490	25 (char. E, H) or 50 (char. K, M)	E, H, K, M	B, C, W	E	S, T	P, R	DAL,MSI,OHM,SOA
M55342^02@5#60&	5,600	25 (char. E, H) or 50 (char. K, M)	E, H, K, M	B, C, W	H, K, N	S, T	P, R	DAL,MSI,OHM,SOA
M55342^02@5#62&	5,620	25 (char. E, H) or 50 (char. K, M)	E, H, K, M	B, C, W	E	S, T	P, R	DAL,MSI,OHM,SOA
M55342^02@5#76&	5,760	25 (char. E, H) or 50 (char. K, M)	E, H, K, M	B, C, W	E	S, T	P, R	DAL,MSI,OHM,SOA
M55342^02@5#90&	5,900	25 (char. E, H) or 50 (char. K, M)	E, H, K, M	B, C, W	E	S, T	P, R	DAL,MSI,OHM,SOA
M55342^02@6#04&	6,040	25 (char. E, H) or 50 (char. K, M)	E, H, K, M	B, C, W	E	S, T	P, R	DAL,MSI,OHM,SOA
	Resistance	Power	Char.	Term.	Res. Tol./	Level 1	Level 2	
Part Number	Value (Ohms)	Rating (mW)	(^)	Type (@)	Multiplier (#)	FRL (&)	FRL (&)	Manufacturer
M55342^02@6#19&	6,190	25 (char. E, H) or 50 (char. K, M)	E, H, K, M	B, C, W	E	S, T	P, R	DAL,MSI,OHM,SOA
M55342^02@6#20&	6,200	25 (char. E, H) or 50 (char. K, M)	E, H, K, M	B, C, W	H, K	S, T	P, R	DAL,MSI,OHM,SOA
M55342^02@6#34&	6,340	25 (char. E, H) or 50 (char. K, M)	E, H, K, M	B, C, W	E	S, T	P, R	DAL,MSI,OHM,SOA
M55342^02@6#49&	6,490	25 (char. E, H) or 50 (char. K, M)	E, H, K, M	B, C, W	E	S, T	P, R	DAL,MSI,OHM,SOA
M55342^02@6#65&	6,650	25 (char. E, H) or 50 (char. K, M)	E, H, K, M	B, C, W	E	S, T	P, R	DAL,MSI,OHM,SOA
M55342^02@6#80&	6,800	25 (char. E, H) or 50 (char. K, M)	E, H, K, M	B, C, W	H, K, N	S, T	P, R	DAL,MSI,OHM,SOA
M55342^02@6#81&	6,810	25 (char. E, H) or 50 (char. K, M)	E, H, K, M	B, C, W	E	S, T	P, R	DAL,MSI,OHM,SOA

M55342^02@6#98&	6,980	25 (char. E, H) or 50 (char. K, M)	E, H, K, M	B, C, W	E	S, T	P, R	DAL,MSI,OHM,SOA
M55342^02@7#15&	7,150	25 (char. E, H) or 50 (char. K, M)	E, H, K, M	B, C, W	E	S, T	P, R	DAL,MSI,OHM,SOA
	Resistance	Power	Char.	Term.	Res. Tol./	Level 1	Level 2	
Part Number	Value (Ohms)	Rating (mW)	(^)	Type (@)	Multiplier (#)	FRL (&)	FRL (&)	Manufacturer
M55342^02@7#32&	7,320	25 (char. E, H) or 50 (char. K, M)	E, H, K, M	B, C, W	E	S, T	P, R	DAL,MSI,OHM,SOA
M55342^02@7#50&	7,500	25 (char. E, H) or 50 (char. K, M)	E, H, K, M	B, C, W	E, H, K	S, T	P, R	DAL,MSI,OHM,SOA
M55342^02@7#68&	7,680	25 (char. E, H) or 50 (char. K, M)	E, H, K, M	B, C, W	E	S, T	P, R	DAL,MSI,OHM,SOA
M55342^02@7#87&	7,870	25 (char. E, H) or 50 (char. K, M)	E, H, K, M	B, C, W	E	S, T	P, R	DAL,MSI,OHM,SOA
M55342^02@8#06&	8,060	25 (char. E, H) or 50 (char. K, M)	E, H, K, M	B, C, W	E	S, T	P, R	DAL,MSI,OHM,SOA
M55342^02@8#20&	8,200	25 (char. E, H) or 50 (char. K, M)	E, H, K, M	B, C, W	H, K, N	S, T	P, R	DAL,MSI,OHM,SOA
M55342^02@8#25&	8,250	25 (char. E, H) or 50 (char. K, M)	E, H, K, M	B, C, W	E	S, T	P, R	DAL,MSI,OHM,SOA
M55342^02@8#45&	8,450	25 (char. E, H) or 50 (char. K, M)	E, H, K, M	B, C, W	E	S, T	P, R	DAL,MSI,OHM,SOA
M55342^02@8#66&	8,660	25 (char. E, H) or 50 (char. K, M)	E, H, K, M	B, C, W	E	S, T	P, R	DAL,MSI,OHM,SOA
	Resistance	Power	Char.	Term.	Res. Tol./	Level 1	Level 2	
Part Number	Value (Ohms)	Rating (mW)	(^)	Type (@)	Multiplier (#)	FRL (&)	FRL (&)	Manufacturer
M55342^02@8#87&	8,870	25 (char. E, H) or 50 (char. K, M)	E, H, K, M	B, C, W	E	S, T	P, R	DAL,MSI,OHM,SOA
M55342^02@9#09&	9,090	25 (char. E, H) or 50 (char. K, M)	E, H, K, M	B, C, W	E	S, T	P, R	DAL,MSI,OHM,SOA
M55342^02@9#10&	9,100	25 (char. E, H) or 50 (char. K, M)	E, H, K, M	B, C, W	H, K	S, T	P, R	DAL,MSI,OHM,SOA
M55342^02@9#31&	9,310	25 (char. E, H) or 50 (char. K, M)	E, H, K, M	B, C, W	E	S, T	P, R	DAL,MSI,OHM,SOA
M55342^02@9#53&	9,530	25 (char. E, H) or 50 (char. K, M)	E, H, K, M	B, C, W	E	S, T	P, R	DAL,MSI,OHM,SOA
M55342^02@9#76&	9,760	25 (char. E, H) or 50 (char. K, M)	E, H, K, M	B, C, W	E	S, T	P, R	DAL,MSI,OHM,SOA
	Resistance	Power	Char.	Term.	Res. Tol./	Level 1	Level 2	
Part Number	Value (Ohms)	Rating (mW)	(^)	Type (@)	Multiplier (#)	FRL (&)	FRL (&)	Manufacturer

MIL-PRF-55342/2 (RM0505) Film Chip Resistors: 10,000 Ohms Through 97,600 Ohms

	Resistance	Power	Char.	Term.	Res. Tol./	Level 1	Level 2	
Part Number	Value (Ohms)	Rating (mW)	(^)	Type (@)	Multiplier (#)	FRL (&)	FRL (&)	Manufacturer
M55342^02@10#0&	10,000	25 (char. E, H) or 50 (char. K, M)	E, H, K, M	B, C, W	E, H, K, N	S, T	P, R	DAL,MSI,OHM,SOA
M55342^02@10#2&	10,200	25 (char. E, H) or 50 (char. K, M)	E, H, K, M	B, C, W	E	S, T	P, R	DAL,MSI,OHM,SOA
M55342^02@10#5&	10,500	25 (char. E, H) or 50 (char. K, M)	E, H, K, M	B, C, W	E	S, T	P, R	DAL,MSI,OHM,SOA
M55342^02@10#7&	10,700	25 (char. E, H) or 50 (char. K, M)	E, H, K, M	B, C, W	E	S, T	P, R	DAL,MSI,OHM,SOA
M55342^02@11#0&	11,000	25 (char. E, H) or 50 (char. K, M)	E, H, K, M	B, C, W	E, H, K	S, T	P, R	DAL,MSI,OHM,SOA
M55342^02@11#3&	11,300	25 (char. E, H) or 50 (char. K, M)	E, H, K, M	B, C, W	E	S, T	P, R	DAL,MSI,OHM,SOA
M55342^02@11#5&	11,500	25 (char. E, H) or 50 (char. K, M)	E, H, K, M	B, C, W	E	S, T	P, R	DAL,MSI,OHM,SOA
M55342^02@11#8&	11,800	25 (char. E, H) or 50 (char. K, M)	E, H, K, M	B, C, W	E	S, T	P, R	DAL,MSI,OHM,SOA
M55342^02@12#0&	12,000	25 (char. E, H) or 50 (char. K, M)	E, H, K, M	B, C, W	H, K, N	S, T	P, R	DAL,MSI,OHM,SOA
	Resistance	Power	Char.	Term.	Res. Tol./	Level 1	Level 2	
Part Number	Value (Ohms)	Rating (mW)	(^)	Type (@)	Multiplier (#)	FRL (&)	FRL (&)	Manufacturer
M55342^02@12#1&	12,100	25 (char. E, H) or 50 (char. K, M)	E, H, K, M	B, C, W	E	S, T	P, R	DAL,MSI,OHM,SOA
M55342^02@12#4&	12,400	25 (char. E, H) or 50 (char. K, M)	E, H, K, M	B, C, W	E	S, T	P, R	DAL,MSI,OHM,SOA
M55342^02@12#7&	12,700	25 (char. E, H) or 50 (char. K, M)	E, H, K, M	B, C, W	E	S, T	P, R	DAL,MSI,OHM,SOA
M55342^02@13#0&	13,000	25 (char. E, H) or 50 (char. K, M)	E, H, K, M	B, C, W	E, H, K	S, T	P, R	DAL,MSI,OHM,SOA
M55342^02@13#3&	13,300	25 (char. E, H) or 50 (char. K, M)	E, H, K, M	B, C, W	E	S, T	P, R	DAL,MSI,OHM,SOA
M55342^02@13#7&	13,700	25 (char. E, H) or 50 (char. K, M)	E, H, K, M	B, C, W	E	S, T	P, R	DAL,MSI,OHM,SOA

M55342^02@14#0&	14,000	25 (char. E, H) or 50 (char. K, M)	E, H, K, M	B, C, W	E	S, T	P, R	DAL,MSI,OHM,SOA
M55342^02@14#3&	14,300	25 (char. E, H) or 50 (char. K, M)	E, H, K, M	B, C, W	E	S, T	P, R	DAL,MSI,OHM,SOA
M55342^02@14#7&	14,700	25 (char. E, H) or 50 (char. K, M)	E, H, K, M	B, C, W	E	S, T	P, R	DAL,MSI,OHM,SOA
	Resistance	Power	Char.	Term.	Res. Tol./	Level 1	Level 2	
Part Number	Value (Ohms)	Rating (mW)	(^)	Type (@)	Multiplier (#)	FRL (&)	FRL (&)	Manufacturer
M55342^02@15#0&	15,000	25 (char. E, H) or 50 (char. K, M)	E, H, K, M	B, C, W	E, H, K, N	S, T	P, R	DAL,MSI,OHM,SOA
M55342^02@15#4&	15,400	25 (char. E, H) or 50 (char. K, M)	E, H, K, M	B, C, W	E	S, T	P, R	DAL,MSI,OHM,SOA
M55342^02@15#8&	15,800	25 (char. E, H) or 50 (char. K, M)	E, H, K, M	B, C, W	E	S, T	P, R	DAL,MSI,OHM,SOA
M55342^02@16#0&	16,000	25 (char. E, H) or 50 (char. K, M)	E, H, K, M	B, C, W	H, K	S, T	P, R	DAL,MSI,OHM,SOA
M55342^02@16#2&	16,200	25 (char. E, H) or 50 (char. K, M)	E, H, K, M	B, C, W	E	S, T	P, R	DAL,MSI,OHM,SOA
M55342^02@16#5&	16,500	25 (char. E, H) or 50 (char. K, M)	E, H, K, M	B, C, W	E	S, T	P, R	DAL,MSI,OHM,SOA
M55342^02@16#9&	16,900	25 (char. E, H) or 50 (char. K, M)	E, H, K, M	B, C, W	E	S, T	P, R	DAL,MSI,OHM,SOA
M55342^02@17#4&	17,400	25 (char. E, H) or 50 (char. K, M)	E, H, K, M	B, C, W	E	S, T	P, R	DAL,MSI,OHM,SOA
M55342^02@17#8&	17,800	25 (char. E, H) or 50 (char. K, M)	E, H, K, M	B, C, W	E	S, T	P, R	DAL,MSI,OHM,SOA
	Resistance	Power	Char.	Term.	Res. Tol./	Level 1	Level 2	
Part Number	Value (Ohms)	Rating (mW)	(^)	Type (@)	Multiplier (#)	FRL (&)	FRL (&)	Manufacturer
M55342^02@18#0&	18,000	25 (char. E, H) or 50 (char. K, M)	E, H, K, M	B, C, W	H, K, N	S, T	P, R	DAL,MSI,OHM,SOA
M55342^02@18#2&	18,200	25 (char. E, H) or 50 (char. K, M)	E, H, K, M	B, C, W	E	S, T	P, R	DAL,MSI,OHM,SOA
M55342^02@18#7&	18,700	25 (char. E, H) or 50 (char. K, M)	E, H, K, M	B, C, W	E	S, T	P, R	DAL,MSI,OHM,SOA
M55342^02@19#1&	19,100	25 (char. E, H) or 50 (char. K, M)	E, H, K, M	B, C, W	E	S, T	P, R	DAL,MSI,OHM,SOA
M55342^02@19#6&	19,600	25 (char. E, H) or 50 (char. K, M)	E, H, K, M	B, C, W	E	S, T	P, R	DAL,MSI,OHM,SOA
M55342^02@20#0&	20,000	25 (char. E, H) or 50 (char. K, M)	E, H, K, M	B, C, W	E, H, K, N	S, T	P, R	DAL,MSI,OHM,SOA
M55342^02@20#5&	20,500	25 (char. E, H) or 50 (char. K, M)	E, H, K, M	B, C, W	E	S, T	P, R	DAL,MSI,OHM,SOA
M55342^02@21#0&	21,000	25 (char. E, H) or 50 (char. K, M)	E, H, K, M	B, C, W	E	S, T	P, R	DAL,MSI,OHM,SOA
M55342^02@21#5&	21,500	25 (char. E, H) or 50 (char. K, M)	E, H, K, M	B, C, W	E	S, T	P, R	DAL,MSI,OHM,SOA
	Resistance	Power	Char.	Term.	Res. Tol./	Level 1	Level 2	
Part Number	Value (Ohms)	Rating (mW)	(^)	Type (@)	Multiplier (#)	FRL (&)	FRL (&)	Manufacturer
M55342^02@22#0&	22,000	25 (char. E, H) or 50 (char. K, M)	E, H, K, M	B, C, W	H, K, N	S, T	P, R	DAL,MSI,OHM,SOA
M55342^02@22#1&	22,100	25 (char. E, H) or 50 (char. K, M)	E, H, K, M	B, C, W	E	S, T	P, R	DAL,MSI,OHM,SOA
M55342^02@22#6&	22,600	25 (char. E, H) or 50 (char. K, M)	E, H, K, M	B, C, W	E	S, T	P, R	DAL,MSI,OHM,SOA
M55342^02@23#2&	23,200	25 (char. E, H) or 50 (char. K, M)	E, H, K, M	B, C, W	E	S, T	P, R	DAL,MSI,OHM,SOA
M55342^02@23#7&	23,700	25 (char. E, H) or 50 (char. K, M)	E, H, K, M	B, C, W	E	S, T	P, R	DAL,MSI,OHM,SOA
M55342^02@24#0&	24,000	25 (char. E, H) or 50 (char. K, M)	E, H, K, M	B, C, W	H, K	S, T	P, R	DAL,MSI,OHM,SOA
M55342^02@24#3&	24,300	25 (char. E, H) or 50 (char. K, M)	E, H, K, M	B, C, W	E	S, T	P, R	DAL,MSI,OHM,SOA
M55342^02@24#9&	24,900	25 (char. E, H) or 50 (char. K, M)	E, H, K, M	B, C, W	E	S, T	P, R	DAL,MSI,OHM,SOA
M55342^02@25#5&	25,500	25 (char. E, H) or 50 (char. K, M)	E, H, K, M	B, C, W	E	S, T	P, R	DAL,MSI,OHM,SOA
	Resistance	Power	Char.	Term.	Res. Tol./	Level 1	Level 2	
Part Number	Value (Ohms)	Rating (mW)	(^)	Type (@)	Multiplier (#)	FRL (&)	FRL (&)	Manufacturer
M55342^02@26#1&	26,100	25 (char. E, H) or 50 (char. K, M)	E, H, K, M	B, C, W	E	S, T	P, R	DAL,MSI,OHM,SOA
M55342^02@26#7&	26,700	25 (char. E, H) or 50 (char. K, M)	E, H, K, M	B, C, W	E	S, T	P, R	DAL,MSI,OHM,SOA
M55342^02@27#0&	27,000	25 (char. E, H) or 50 (char. K, M)	E, H, K, M	B, C, W	H, K, N	S, T	P, R	DAL,MSI,OHM,SOA
M55342^02@27#4&	27,400	25 (char. E, H) or 50 (char. K, M)	E, H, K, M	B, C, W	E	S, T	P, R	DAL,MSI,OHM,SOA
M55342^02@28#0&	28,000	25 (char. E, H) or 50 (char. K, M)	E, H, K, M	B, C, W	E	S, T	P, R	DAL,MSI,OHM,SOA
M55342^02@28#7&	28,700	25 (char. E, H) or 50 (char. K, M)	E, H, K, M	B, C, W	E	S, T	P, R	DAL,MSI,OHM,SOA
M55342^02@29#4&	29,400	25 (char. E, H) or 50 (char. K, M)	E, H, K, M	B, C, W	E	S, T	P, R	DAL,MSI,OHM,SOA
M55342^02@30#0&	30,000	25 (char. E, H) or 50 (char. K, M)	E, H, K, M	B, C, W	H, K	S, T	P, R	DAL,MSI,OHM,SOA
M55342^02@30#1&	30,100	25 (char. E, H) or 50 (char. K, M)	E, H, K, M	B, C, W	E	S, T	P, R	DAL,MSI,OHM,SOA

	Resistance	Power	Char.	Term.	Res. Tol./	Level 1	Level 2	
Part Number	Value (Ohms)	Rating (mW)	(^)	Type (@)	Multiplier (#)	FRL (&)	FRL (&)	Manufacturer
M55342^02@30#9&	30,900	25 (char. E, H) or 50 (char. K, M)	E, H, K, M	B, C, W	E	S, T	P, R	DAL,MSI,OHM,SOA
M55342^02@31#6&	31,600	25 (char. E, H) or 50 (char. K, M)	E, H, K, M	B, C, W	E	S, T	P, R	DAL,MSI,OHM,SOA
M55342^02@32#4&	32,400	25 (char. E, H) or 50 (char. K, M)	E, H, K, M	B, C, W	E	S, T	P, R	DAL,MSI,OHM,SOA
M55342^02@33#0&	33,000	25 (char. E, H) or 50 (char. K, M)	E, H, K, M	B, C, W	H, K, N	S, T	P, R	DAL,MSI,OHM,SOA
M55342^02@33#2&	33,200	25 (char. E, H) or 50 (char. K, M)	E, H, K, M	B, C, W	E	S, T	P, R	DAL,MSI,OHM,SOA
M55342^02@34#0&	34,000	25 (char. E, H) or 50 (char. K, M)	E, H, K, M	B, C, W	E	S, T	P, R	DAL,MSI,OHM,SOA
M55342^02@34#8&	34,800	25 (char. E, H) or 50 (char. K, M)	E, H, K, M	B, C, W	E	S, T	P, R	DAL,MSI,OHM,SOA
M55342^02@35#7&	35,700	25 (char. E, H) or 50 (char. K, M)	E, H, K, M	B, C, W	E	S, T	P, R	DAL,MSI,OHM,SOA
M55342^02@36#0&	36,000	25 (char. E, H) or 50 (char. K, M)	E, H, K, M	B, C, W	H, K	S, T	P, R	DAL,MSI,OHM,SOA
	Resistance	Power	Char.	Term.	Res. Tol./	Level 1	Level 2	
Part Number	Value (Ohms)	Rating (mW)	(^)	Type (@)	Multiplier (#)	FRL (&)	FRL (&)	Manufacturer
M55342^02@36#5&	36,500	25 (char. E, H) or 50 (char. K, M)	E, H, K, M	B, C, W	E	S, T	P, R	DAL,MSI,OHM,SOA
M55342^02@37#4&	37,400	25 (char. E, H) or 50 (char. K, M)	E, H, K, M	B, C, W	E	S, T	P, R	DAL,MSI,OHM,SOA
M55342^02@38#3&	38,300	25 (char. E, H) or 50 (char. K, M)	E, H, K, M	B, C, W	E	S, T	P, R	DAL,MSI,OHM,SOA
M55342^02@39#0&	39,000	25 (char. E, H) or 50 (char. K, M)	E, H, K, M	B, C, W	H, K, N	S, T	P, R	DAL,MSI,OHM,SOA
M55342^02@39#2&	39,200	25 (char. E, H) or 50 (char. K, M)	E, H, K, M	B, C, W	E	S, T	P, R	DAL,MSI,OHM,SOA
M55342^02@40#2&	40,200	25 (char. E, H) or 50 (char. K, M)	E, H, K, M	B, C, W	E	S, T	P, R	DAL,MSI,OHM,SOA
M55342^02@41#2&	41,200	25 (char. E, H) or 50 (char. K, M)	E, H, K, M	B, C, W	E	S, T	P, R	DAL,MSI,OHM,SOA
M55342^02@42#2&	42,200	25 (char. E, H) or 50 (char. K, M)	E, H, K, M	B, C, W	E	S, T	P, R	DAL,MSI,OHM,SOA
M55342^02@43#0&	43,000	25 (char. E, H) or 50 (char. K, M)	E, H, K, M	B, C, W	H, K	S, T	P, R	DAL,MSI,OHM,SOA
	Resistance	Power	Char.	Term.	Res. Tol./	Level 1	Level 2	
Part Number	Value (Ohms)	Rating (mW)	(^)	Type (@)	Multiplier (#)	FRL (&)	FRL (&)	Manufacturer
M55342^02@43#2&	43,200	25 (char. E, H) or 50 (char. K, M)	E, H, K, M	B, C, W	E	S, T	P, R	DAL,MSI,OHM,SOA
M55342^02@44#2&	44,200	25 (char. E, H) or 50 (char. K, M)	E, H, K, M	B, C, W	E	S, T	P, R	DAL,MSI,OHM,SOA
M55342^02@45#3&	45,300	25 (char. E, H) or 50 (char. K, M)	E, H, K, M	B, C, W	E	S, T	P, R	DAL,MSI,OHM,SOA
M55342^02@46#4&	46,400	25 (char. E, H) or 50 (char. K, M)	E, H, K, M	B, C, W	E	S, T	P, R	DAL,MSI,OHM,SOA
M55342^02@47#0&	47,000	25 (char. E, H) or 50 (char. K, M)	E, H, K, M	B, C, W	H, K, N	S, T	P, R	DAL,MSI,OHM,SOA
M55342^02@47#5&	47,500	25 (char. E, H) or 50 (char. K, M)	E, H, K, M	B, C, W	E	S, T	P, R	DAL,MSI,OHM,SOA
M55342^02@48#7&	48,700	25 (char. E, H) or 50 (char. K, M)	E, H, K, M	B, C, W	E	S, T	P, R	DAL,MSI,OHM,SOA
M55342^02@49#9&	49,900	25 (char. E, H) or 50 (char. K, M)	E, H, K, M	B, C, W	E	S, T	P, R	DAL,MSI,OHM,SOA
M55342^02@51#0&	51,000	25 (char. E, H) or 50 (char. K, M)	E, H, K, M	B, C, W	H, K	S, T	P, R	DAL,MSI,OHM,SOA
	Resistance	Power	Char.	Term.	Res. Tol./	Level 1	Level 2	
Part Number	Value (Ohms)	Rating (mW)	(^)	Type (@)	Multiplier (#)	FRL (&)	FRL (&)	Manufacturer
M55342^02@51#1&	51,100	25 (char. E, H) or 50 (char. K, M)	E, H, K, M	B, C, W	E	S, T	P, R	DAL,MSI,OHM,SOA
M55342^02@52#3&	52,300	25 (char. E, H) or 50 (char. K, M)	E, H, K, M	B, C, W	E	S, T	P, R	DAL,MSI,OHM,SOA
M55342^02@53#6&	53,600	25 (char. E, H) or 50 (char. K, M)	E, H, K, M	B, C, W	E	S, T	P, R	DAL,MSI,OHM,SOA
M55342^02@54#9&	54,900	25 (char. E, H) or 50 (char. K, M)	E, H, K, M	B, C, W	E	S, T	P, R	DAL,MSI,OHM,SOA
M55342^02@56#0&	56,000	25 (char. E, H) or 50 (char. K, M)	E, H, K, M	B, C, W	H, K, N	S, T	P, R	DAL,MSI,OHM,SOA
M55342^02@56#2&	56,200	25 (char. E, H) or 50 (char. K, M)	E, H, K, M	B, C, W	E	S, T	P, R	DAL,MSI,OHM,SOA
M55342^02@57#6&	57,600	25 (char. E, H) or 50 (char. K, M)	E, H, K, M	B, C, W	E	S, T	P, R	DAL,MSI,OHM,SOA
M55342^02@59#0&	59,000	25 (char. E, H) or 50 (char. K, M)	E, H, K, M	B, C, W	E	S, T	P, R	DAL,MSI,OHM,SOA
M55342^02@60#4&	60,400	25 (char. E, H) or 50 (char. K, M)	E, H, K, M	B, C, W	E	S, T	P, R	DAL,MSI,OHM,SOA
	Resistance	Power	Char.	Term.	Res. Tol./	Level 1	Level 2	
Part Number	Value (Ohms)	Rating (mW)	(^)	Type (@)	Multiplier (#)	FRL (&)	FRL (&)	Manufacturer
M55342^02@61#9&	61,900	25 (char. E, H) or 50 (char. K, M)	E, H, K, M	B, C, W	E	S, T	P, R	DAL,MSI,OHM,SOA

M55342^02@62#0&	62,000	25 (char. E, H) or 50 (char. K, M)	E, H, K, M	B, C, W	H, K	S, T	P, R	DAL,MSI,OHM,SOA
M55342^02@63#4&	63,400	25 (char. E, H) or 50 (char. K, M)	E, H, K, M	B, C, W	E	S, T	P, R	DAL,MSI,OHM,SOA
M55342^02@64#9&	64,900	25 (char. E, H) or 50 (char. K, M)	E, H, K, M	B, C, W	E	S, T	P, R	DAL,MSI,OHM,SOA
M55342^02@66#5&	66,500	25 (char. E, H) or 50 (char. K, M)	E, H, K, M	B, C, W	E	S, T	P, R	DAL,MSI,OHM,SOA
M55342^02@68#0&	68,000	25 (char. E, H) or 50 (char. K, M)	E, H, K, M	B, C, W	H, K, N	S, T	P, R	DAL,MSI,OHM,SOA
M55342^02@68#1&	68,100	25 (char. E, H) or 50 (char. K, M)	E, H, K, M	B, C, W	E	S, T	P, R	DAL,MSI,OHM,SOA
M55342^02@69#8&	69,800	25 (char. E, H) or 50 (char. K, M)	E, H, K, M	B, C, W	E	S, T	P, R	DAL,MSI,OHM,SOA
M55342^02@71#5&	71,500	25 (char. E, H) or 50 (char. K, M)	E, H, K, M	B, C, W	E	S, T	P, R	DAL,MSI,OHM,SOA
	Resistance	Power	Char.	Term.	Res. Tol./	Level 1	Level 2	
Part Number	Value (Ohms)	Rating (mW)	(^)	Type (@)	Multiplier (#)	FRL (&)	FRL (&)	Manufacturer
M55342^02@73#2&	73,200	25 (char. E, H) or 50 (char. K, M)	E, H, K, M	B, C, W	E	S, T	P, R	DAL,MSI,OHM,SOA
M55342^02@75#0&	75,000	25 (char. E, H) or 50 (char. K, M)	E, H, K, M	B, C, W	E, H, K	S, T	P, R	DAL,MSI,OHM,SOA
M55342^02@76#8&	76,800	25 (char. E, H) or 50 (char. K, M)	E, H, K, M	B, C, W	E	S, T	P, R	DAL,MSI,OHM,SOA
M55342^02@78#7&	78,700	25 (char. E, H) or 50 (char. K, M)	E, H, K, M	B, C, W	E	S, T	P, R	DAL,MSI,OHM,SOA
M55342^02@80#6&	80,600	25 (char. E, H) or 50 (char. K, M)	E, H, K, M	B, C, W	E	S, T	P, R	DAL,MSI,OHM,SOA
M55342^02@82#0&	82,000	25 (char. E, H) or 50 (char. K, M)	E, H, K, M	B, C, W	H, K, N	S, T	P, R	DAL,MSI,OHM,SOA
M55342^02@82#5&	82,500	25 (char. E, H) or 50 (char. K, M)	E, H, K, M	B, C, W	E	S, T	P, R	DAL,MSI,OHM,SOA
M55342^02@84#5&	84,500	25 (char. E, H) or 50 (char. K, M)	E, H, K, M	B, C, W	E	S, T	P, R	DAL,MSI,OHM,SOA
M55342^02@86#6&	86,600	25 (char. E, H) or 50 (char. K, M)	E, H, K, M	B, C, W	E	S, T	P, R	DAL,MSI,OHM,SOA
	Resistance	Power	Char.	Term.	Res. Tol./	Level 1	Level 2	
Part Number	Value (Ohms)	Rating (mW)	(^)	Type (@)	Multiplier (#)	FRL (&)	FRL (&)	Manufacturer
M55342^02@88#7&	88,700	25 (char. E, H) or 50 (char. K, M)	E, H, K, M	B, C, W	E	S, T	P, R	DAL,MSI,OHM,SOA
M55342^02@90#9&	90,900	25 (char. E, H) or 50 (char. K, M)	E, H, K, M	B, C, W	E	S, T	P, R	DAL,MSI,OHM,SOA
M55342^02@91#0&	91,000	25 (char. E, H) or 50 (char. K, M)	E, H, K, M	B, C, W	H, K	S, T	P, R	DAL,MSI,OHM,SOA
M55342^02@93#1&	93,100	25 (char. E, H) or 50 (char. K, M)	E, H, K, M	B, C, W	E	S, T	P, R	DAL,MSI,OHM,SOA
M55342^02@95#3&	95,300	25 (char. E, H) or 50 (char. K, M)	E, H, K, M	B, C, W	E	S, T	P, R	DAL,MSI,OHM,SOA
M55342^02@97#6&	97,600	25 (char. E, H) or 50 (char. K, M)	E, H, K, M	B, C, W	E	S, T	P, R	DAL,MSI,OHM,SOA
	Resistance	Power	Char.	Term.	Res. Tol./	Level 1	Level 2	
Part Number	Value (Ohms)	Rating (mW)	(^)	Type (@)	Multiplier (#)	FRL (&)	FRL (&)	Manufacturer

MIL-PRF-55342/2 (RM0505) Film Chip Resistors: 100,000 Ohms Through 1,000,000 Ohms

	Resistance	Power	Char.	Term.	Res. Tol./	Level 1	Level 2	
Part Number	Value (Ohms)	Rating (mW)	(^)	Type (@)	Multiplier (#)	FRL (&)	FRL (&)	Manufacturer
M55342^02@100#&	100,000	25 (char. E, H) or 50 (char. K, M)	E, H, K, M	B, C, W	E, H, K, N	S, T	P, R	DAL,MSI,OHM,SOA
M55342^02@102#&	102,000	25 (char. E, H) or 50 (char. K, M)	E, H, K, M	B, C, W	E	S, T	P, R	DAL,MSI,OHM,SOA
M55342^02@105#&	105,000	25 (char. E, H) or 50 (char. K, M)	E, H, K, M	B, C, W	E	S, T	P, R	DAL,MSI,OHM,SOA
M55342^02@107#&	107,000	25 (char. E, H) or 50 (char. K, M)	E, H, K, M	B, C, W	E	S, T	P, R	DAL,MSI,OHM,SOA
M55342^02@110#&	110,000	25 (char. E, H) or 50 (char. K, M)	E, H, K, M	B, C, W	E, H, K	S, T	P, R	DAL,MSI,OHM,SOA
M55342^02@113#&	113,000	25 (char. E, H) or 50 (char. K, M)	E, H, K, M	B, C, W	E	S, T	P, R	DAL,MSI,OHM,SOA
M55342^02@115#&	115,000	25 (char. E, H) or 50 (char. K, M)	E, H, K, M	B, C, W	E	S, T	P, R	DAL,MSI,OHM,SOA
M55342^02@118#&	118,000	25 (char. E, H) or 50 (char. K, M)	E, H, K, M	B, C, W	E	S, T	P, R	DAL,MSI,OHM,SOA
	Resistance	Power	Char.	Term.	Res. Tol./	Level 1	Level 2	
Part Number	Value (Ohms)	Rating (mW)	(^)	Type (@)	Multiplier (#)	FRL (&)	FRL (&)	Manufacturer
M55342^02@120#&	120,000	25 (char. E, H) or 50 (char. K, M)	E, H, K, M	B, C, W	H, K, N	S, T	P, R	DAL,MSI,OHM,SOA

M55342^02@121#&	121,000	25 (char. E, H) or 50 (char. K, M)	E, H, K, M	B, C, W	E	S, T	P, R	DAL,MSI,OHM,SOA
M55342^02@124#&	124,000	25 (char. E, H) or 50 (char. K, M)	E, H, K, M	B, C, W	E	S, T	P, R	DAL,MSI,OHM,SOA
M55342^02@127#&	127,000	25 (char. E, H) or 50 (char. K, M)	E, H, K, M	B, C, W	E	S, T	P, R	DAL,MSI,OHM,SOA
M55342^02@130#&	130,000	25 (char. E, H) or 50 (char. K, M)	E, H, K, M	B, C, W	E, H, K	S, T	P, R	DAL,MSI,OHM,SOA
M55342^02@133#&	133,000	25 (char. E, H) or 50 (char. K, M)	E, H, K, M	B, C, W	E	S, T	P, R	DAL,MSI,OHM,SOA
M55342^02@137#&	137,000	25 (char. E, H) or 50 (char. K, M)	E, H, K, M	B, C, W	E	S, T	P, R	DAL,MSI,OHM,SOA
M55342^02@140#&	140,000	25 (char. E, H) or 50 (char. K, M)	E, H, K, M	B, C, W	E	S, T	P, R	DAL,MSI,OHM,SOA
	Resistance	Power	Char.	Term.	Res. Tol./	Level 1	Level 2	
Part Number	Value (Ohms)	Rating (mW)	(^)	Type (@)	Multiplier (#)	FRL (&)	FRL (&)	Manufacturer
M55342^02@143#&	143,000	25 (char. E, H) or 50 (char. K, M)	E, H, K, M	B, C, W	E	S, T	P, R	DAL,MSI,OHM,SOA
M55342^02@147#&	147,000	25 (char. E, H) or 50 (char. K, M)	E, H, K, M	B, C, W	E	S, T	P, R	DAL,MSI,OHM,SOA
M55342^02@150#&	150,000	25 (char. E, H) or 50 (char. K, M)	E, H, K, M	B, C, W	E, H, K, N	S, T	P, R	DAL,MSI,OHM,SOA
M55342^02@154#&	154,000	25 (char. E, H) or 50 (char. K, M)	E, H, K, M	B, C, W	E	S, T	P, R	DAL,MSI,OHM,SOA
M55342^02@158#&	158,000	25 (char. E, H) or 50 (char. K, M)	E, H, K, M	B, C, W	E	S, T	P, R	DAL,MSI,OHM,SOA
M55342^02@160#&	160,000	25 (char. E, H) or 50 (char. K, M)	E, H, K, M	B, C, W	H, K	S, T	P, R	DAL,MSI,OHM,SOA
M55342^02@162#&	162,000	25 (char. E, H) or 50 (char. K, M)	E, H, K, M	B, C, W	E	S, T	P, R	DAL,MSI,OHM,SOA
M55342^02@165#&	165,000	25 (char. E, H) or 50 (char. K, M)	E, H, K, M	B, C, W	E	S, T	P, R	DAL,MSI,OHM,SOA
M55342^02@169#&	169,000	25 (char. E, H) or 50 (char. K, M)	E, H, K, M	B, C, W	E	S, T	P, R	DAL,MSI,OHM,SOA
	Resistance	Power	Char.	Term.	Res. Tol./	Level 1	Level 2	
Part Number	Value (Ohms)	Rating (mW)	(^)	Type (@)	Multiplier (#)	FRL (&)	FRL (&)	Manufacturer
M55342^02@174#&	174,000	25 (char. E, H) or 50 (char. K, M)	E, H, K, M	B, C, W	E	S, T	P, R	DAL,MSI,OHM,SOA
M55342^02@178#&	178,000	25 (char. E, H) or 50 (char. K, M)	E, H, K, M	B, C, W	E	S, T	P, R	DAL,MSI,OHM,SOA
M55342^02@180#&	180,000	25 (char. E, H) or 50 (char. K, M)	E, H, K, M	B, C, W	H, K, N	S, T	P, R	DAL,MSI,OHM,SOA
M55342^02@182#&	182,000	25 (char. E, H) or 50 (char. K, M)	E, H, K, M	B, C, W	E	S, T	P, R	DAL,MSI,OHM,SOA
M55342^02@187#&	187,000	25 (char. E, H) or 50 (char. K, M)	E, H, K, M	B, C, W	E	S, T	P, R	DAL,MSI,OHM,SOA
M55342^02@191#&	191,000	25 (char. E, H) or 50 (char. K, M)	E, H, K, M	B, C, W	E	S, T	P, R	DAL,MSI,OHM,SOA
M55342^02@196#&	196,000	25 (char. E, H) or 50 (char. K, M)	E, H, K, M	B, C, W	E	S, T	P, R	DAL,MSI,OHM,SOA
M55342^02@200#&	200,000	25 (char. E, H) or 50 (char. K, M)	E, H, K, M	B, C, W	E, H, K, N	S, T	P, R	DAL,MSI,OHM,SOA
M55342^02@205#&	205,000	25 (char. E, H) or 50 (char. K, M)	E, H, K, M	B, C, W	E	S, T	P, R	DAL,MSI,OHM,SOA
	Resistance	Power	Char.	Term.	Res. Tol./	Level 1	Level 2	
Part Number	Value (Ohms)	Rating (mW)	(^)	Type (@)	Multiplier (#)	FRL (&)	FRL (&)	Manufacturer
M55342^02@210#&	210,000	25 (char. E, H) or 50 (char. K, M)	E, H, K, M	B, C, W	E	S, T	P, R	DAL,MSI,OHM,SOA
M55342^02@215#&	215,000	25 (char. E, H) or 50 (char. K, M)	E, H, K, M	B, C, W	E	S, T	P, R	DAL,MSI,OHM,SOA
M55342^02@220#&	220,000	25 (char. E, H) or 50 (char. K, M)	E, H, K, M	B, C, W	H, K, N	S, T	P, R	DAL,MSI,OHM,SOA
M55342^02@221#&	221,000	25 (char. E, H) or 50 (char. K, M)	E, H, K, M	B, C, W	E	S, T	P, R	DAL,MSI,OHM,SOA
M55342^02@226#&	226,000	25 (char. E, H) or 50 (char. K, M)	E, H, K, M	B, C, W	E	S, T	P, R	DAL,MSI,OHM,SOA
M55342^02@232#&	232,000	25 (char. E, H) or 50 (char. K, M)	E, H, K, M	B, C, W	E	S, T	P, R	DAL,MSI,OHM,SOA
M55342^02@237#&	237,000	25 (char. E, H) or 50 (char. K, M)	E, H, K, M	B, C, W	E	S, T	P, R	DAL,MSI,OHM,SOA
M55342^02@240#&	240,000	25 (char. E, H) or 50 (char. K, M)	E, H, K, M	B, C, W	H, K	S, T	P, R	DAL,MSI,OHM,SOA
M55342^02@243#&	243,000	25 (char. E, H) or 50 (char. K, M)	E, H, K, M	B, C, W	E	S, T	P, R	DAL,MSI,OHM,SOA
	Resistance	Power	Char.	Term.	Res. Tol./	Level 1	Level 2	
Part Number	Value (Ohms)	Rating (mW)	(^)	Type (@)	Multiplier (#)	FRL (&)	FRL (&)	Manufacturer
M55342^02@249#&	249,000	25 (char. E, H) or 50 (char. K, M)	E, H, K, M	B, C, W	E	S, T	P, R	DAL,MSI,OHM,SOA
M55342^02@255#&	255,000	25 (char. E, H) or 50 (char. K, M)	E, H, K, M	B, C, W	E	S, T	P, R	DAL,MSI,OHM,SOA
M55342^02@261#&	261,000	25 (char. E, H) or 50 (char. K, M)	E, H, K, M	B, C, W	E	S, T	P, R	DAL,MSI,OHM,SOA
M55342^02@267#&	267,000	25 (char. E, H) or 50 (char. K, M)	E, H, K, M	B, C, W	E	S, T	P, R	DAL,MSI,OHM,SOA
M55342^02@270#&	270,000	25 (char. E, H) or 50 (char. K, M)	E, H, K, M	B, C, W	H, K, N	S, T	P, R	DAL,MSI,OHM,SOA

M55342^02@274#&	274,000	25 (char. E, H) or 50 (char. K, M)	E, H, K, M	B, C, W	E	S, T	P, R	DAL,MSI,OHM,SOA
M55342^02@280#&	280,000	25 (char. E, H) or 50 (char. K, M)	E, H, K, M	B, C, W	E	S, T	P, R	DAL,MSI,OHM,SOA
M55342^02@287#&	287,000	25 (char. E, H) or 50 (char. K, M)	E, H, K, M	B, C, W	E	S, T	P, R	DAL,MSI,OHM,SOA
M55342^02@294#&	294,000	25 (char. E, H) or 50 (char. K, M)	E, H, K, M	B, C, W	E	S, T	P, R	DAL,MSI,OHM,SOA
	Resistance	Power	Char.	Term.	Res. Tol./	Level 1	Level 2	
Part Number	Value (Ohms)	Rating (mW)	(^)	Type (@)	Multiplier (#)	FRL (&)	FRL (&)	Manufacturer
M55342^02@300#&	300,000	25 (char. E, H) or 50 (char. K, M)	E, H, K, M	B, C, W	H, K	S, T	P, R	DAL,MSI,OHM,SOA
M55342^02@301#&	301,000	25 (char. E, H) or 50 (char. K, M)	E, H, K, M	B, C, W	E	S, T	P, R	DAL,MSI,OHM,SOA
M55342^02@309#&	309,000	25 (char. E, H) or 50 (char. K, M)	E, H, K, M	B, C, W	E	S, T	P, R	DAL,MSI,OHM,SOA
M55342^02@316#&	316,000	25 (char. E, H) or 50 (char. K, M)	E, H, K, M	B, C, W	E	S, T	P, R	DAL,MSI,OHM,SOA
M55342^02@324#&	324,000	25 (char. E, H) or 50 (char. K, M)	E, H, K, M	B, C, W	E	S, T	P, R	DAL,MSI,OHM,SOA
M55342^02@330#&	330,000	25 (char. E, H) or 50 (char. K, M)	E, H, K, M	B, C, W	H, K, N	S, T	P, R	DAL,MSI,OHM,SOA
M55342^02@332#&	332,000	25 (char. E, H) or 50 (char. K, M)	E, H, K, M	B, C, W	E	S, T	P, R	DAL,MSI,OHM,SOA
M55342^02@340#&	340,000	25 (char. E, H) or 50 (char. K, M)	E, H, K, M	B, C, W	E	S, T	P, R	DAL,MSI,OHM,SOA
M55342^02@348#&	348,000	25 (char. E, H) or 50 (char. K, M)	E, H, K, M	B, C, W	E	S, T	P, R	DAL,MSI,OHM,SOA
	Resistance	Power	Char.	Term.	Res. Tol./	Level 1	Level 2	
Part Number	Value (Ohms)	Rating (mW)	(^)	Type (@)	Multiplier (#)	FRL (&)	FRL (&)	Manufacturer
M55342^02@357#&	357,000	25 (char. E, H) or 50 (char. K, M)	E, H, K, M	B, C, W	E	S, T	P, R	DAL,MSI,OHM,SOA
M55342^02@360#&	360,000	25 (char. E, H) or 50 (char. K, M)	E, H, K, M	B, C, W	H, K	S, T	P, R	DAL,MSI,OHM,SOA
M55342^02@365#&	365,000	25 (char. E, H) or 50 (char. K, M)	E, H, K, M	B, C, W	E	S, T	P, R	DAL,MSI,OHM,SOA
M55342^02@374#&	374,000	25 (char. E, H) or 50 (char. K, M)	E, H, K, M	B, C, W	E	S, T	P, R	DAL,MSI,OHM,SOA
M55342^02@383#&	383,000	25 (char. E, H) or 50 (char. K, M)	E, H, K, M	B, C, W	E	S, T	P, R	DAL,MSI,OHM,SOA
M55342^02@390#&	390,000	25 (char. E, H) or 50 (char. K, M)	E, H, K, M	B, C, W	H, K, N	S, T	P, R	DAL,MSI,OHM,SOA
M55342^02@392#&	392,000	25 (char. E, H) or 50 (char. K, M)	E, H, K, M	B, C, W	E	S, T	P, R	DAL,MSI,OHM,SOA
M55342^02@402#&	402,000	25 (char. E, H) or 50 (char. K, M)	E, H, K, M	B, C, W	E	S, T	P, R	DAL,MSI,OHM,SOA
M55342^02@412#&	412,000	25 (char. E, H) or 50 (char. K, M)	E, H, K, M	B, C, W	E	S, T	P, R	DAL,MSI,OHM,SOA
	Resistance	Power	Char.	Term.	Res. Tol./	Level 1	Level 2	
Part Number	Value (Ohms)	Rating (mW)	(^)	Type (@)	Multiplier (#)	FRL (&)	FRL (&)	Manufacturer
M55342^02@422#&	422,000	25 (char. E, H) or 50 (char. K, M)	E, H, K, M	B, C, W	E	S, T	P, R	DAL,MSI,OHM,SOA
M55342^02@430#&	430,000	25 (char. E, H) or 50 (char. K, M)	E, H, K, M	B, C, W	H, K	S, T	P, R	DAL,MSI,OHM,SOA
M55342^02@432#&	432,000	25 (char. E, H) or 50 (char. K, M)	E, H, K, M	B, C, W	E	S, T	P, R	DAL,MSI,OHM,SOA
M55342^02@442#&	442,000	25 (char. E, H) or 50 (char. K, M)	E, H, K, M	B, C, W	E	S, T	P, R	DAL,MSI,OHM,SOA
M55342^02@453#&	453,000	25 (char. E, H) or 50 (char. K, M)	E, H, K, M	B, C, W	E	S, T	P, R	DAL,MSI,OHM,SOA
M55342^02@464#&	464,000	25 (char. E, H) or 50 (char. K, M)	E, H, K, M	B, C, W	E	S, T	P, R	DAL,MSI,OHM,SOA
M55342^02@470#&	470,000	25 (char. E, H) or 50 (char. K, M)	E, H, K, M	B, C, W	H, K, N	S, T	P, R	DAL,MSI,OHM,SOA
M55342^02@475#&	475,000	25 (char. E, H) or 50 (char. K, M)	E, H, K, M	B, C, W	E	S, T	P, R	MSI
M55342^02@487#&	487,000	25 (char. E, H) or 50 (char. K, M)	E, H, K, M	B, C, W	E	S, T	P, R	No Source Yet
	Resistance	Power	Char.	Term.	Res. Tol./	Level 1	Level 2	
Part Number	Value (Ohms)	Rating (mW)	(^)	Type (@)	Multiplier (#)	FRL (&)	FRL (&)	Manufacturer
M55342^02@499#&	499,000	25 (char. E, H) or 50 (char. K, M)	E, H, K, M	B, C, W	E	S, T	P, R	No Source Yet
M55342^02@510#&	510,000	25 (char. E, H) or 50 (char. K, M)	E, H, K, M	B, C, W	H, K	S, T	P, R	No Source Yet
M55342^02@511#&	511,000	25 (char. E, H) or 50 (char. K, M)	E, H, K, M	B, C, W	E	S, T	P, R	No Source Yet
M55342^02@523#&	523,000	25 (char. E, H) or 50 (char. K, M)	E, H, K, M	B, C, W	E	S, T	P, R	No Source Yet
M55342^02@536#&	536,000	25 (char. E, H) or 50 (char. K, M)	E, H, K, M	B, C, W	E	S, T	P, R	No Source Yet
M55342^02@549#&	549,000	25 (char. E, H) or 50 (char. K, M)	E, H, K, M	B, C, W	E	S, T	P, R	No Source Yet
M55342^02@560#&	560,000	25 (char. E, H) or 50 (char. K, M)	E, H, K, M	B, C, W	H, K, N	S, T	P, R	No Source Yet
M55342^02@562#&	562,000	25 (char. E, H) or 50 (char. K, M)	E, H, K, M	B, C, W	E	S, T	P, R	No Source Yet

M55342^02@576#&	576,000	25 (char. E, H) or 50 (char. K, M)	E, H, K, M	B, C, W	E	S, T	P, R	No Source Yet
	Resistance	Power	Char.	Term.	Res. Tol./	Level 1	Level 2	
Part Number	Value (Ohms)	Rating (mW)	(^)	Type (@)	Multiplier (#)	FRL (&)	FRL (&)	Manufacturer
M55342^02@590#&	590,000	25 (char. E, H) or 50 (char. K, M)	E, H, K, M	B, C, W	E	S, T	P, R	No Source Yet
M55342^02@604#&	604,000	25 (char. E, H) or 50 (char. K, M)	E, H, K, M	B, C, W	E	S, T	P, R	No Source Yet
M55342^02@619#&	619,000	25 (char. E, H) or 50 (char. K, M)	E, H, K, M	B, C, W	E	S, T	P, R	No Source Yet
M55342^02@620#&	620,000	25 (char. E, H) or 50 (char. K, M)	E, H, K, M	B, C, W	H, K	S, T	P, R	No Source Yet
M55342^02@634#&	634,000	25 (char. E, H) or 50 (char. K, M)	E, H, K, M	B, C, W	E	S, T	P, R	No Source Yet
M55342^02@649#&	649,000	25 (char. E, H) or 50 (char. K, M)	E, H, K, M	B, C, W	E	S, T	P, R	No Source Yet
M55342^02@665#&	665,000	25 (char. E, H) or 50 (char. K, M)	E, H, K, M	B, C, W	E	S, T	P, R	No Source Yet
M55342^02@680#&	680,000	25 (char. E, H) or 50 (char. K, M)	E, H, K, M	B, C, W	H, K, N	S, T	P, R	No Source Yet
M55342^02@681#&	681,000	25 (char. E, H) or 50 (char. K, M)	E, H, K, M	B, C, W	E	S, T	P, R	No Source Yet
	Resistance	Power	Char.	Term.	Res. Tol./	Level 1	Level 2	
Part Number	Value (Ohms)	Rating (mW)	(^)	Type (@)	Multiplier (#)	FRL (&)	FRL (&)	Manufacturer
M55342^02@698#&	698,000	25 (char. E, H) or 50 (char. K, M)	E, H, K, M	B, C, W	E	S, T	P, R	No Source Yet
M55342^02@715#&	715,000	25 (char. E, H) or 50 (char. K, M)	E, H, K, M	B, C, W	E	S, T	P, R	No Source Yet
M55342^02@732#&	732,000	25 (char. E, H) or 50 (char. K, M)	E, H, K, M	B, C, W	E	S, T	P, R	No Source Yet
M55342^02@750#&	750,000	25 (char. E, H) or 50 (char. K, M)	E, H, K, M	B, C, W	E, H, K	S, T	P, R	No Source Yet
M55342^02@768#&	768,000	25 (char. E, H) or 50 (char. K, M)	E, H, K, M	B, C, W	E	S, T	P, R	No Source Yet
M55342^02@787#&	787,000	25 (char. E, H) or 50 (char. K, M)	E, H, K, M	B, C, W	E	S, T	P, R	No Source Yet
M55342^02@806#&	806,000	25 (char. E, H) or 50 (char. K, M)	E, H, K, M	B, C, W	E	S, T	P, R	No Source Yet
M55342^02@820#&	820,000	25 (char. E, H) or 50 (char. K, M)	E, H, K, M	B, C, W	H, K, N	S, T	P, R	No Source Yet
M55342^02@825#&	825,000	25 (char. E, H) or 50 (char. K, M)	E, H, K, M	B, C, W	E	S, T	P, R	No Source Yet
	Resistance	Power	Char.	Term.	Res. Tol./	Level 1	Level 2	
Part Number	Value (Ohms)	Rating (mW)	(^)	Type (@)	Multiplier (#)	FRL (&)	FRL (&)	Manufacturer
M55342^02@845#&	845,000	25 (char. E, H) or 50 (char. K, M)	E, H, K, M	B, C, W	E	S, T	P, R	No Source Yet
M55342^02@866#&	866,000	25 (char. E, H) or 50 (char. K, M)	E, H, K, M	B, C, W	E	S, T	P, R	No Source Yet
M55342^02@887#&	887,000	25 (char. E, H) or 50 (char. K, M)	E, H, K, M	B, C, W	E	S, T	P, R	No Source Yet
M55342^02@909#&	909,000	25 (char. E, H) or 50 (char. K, M)	E, H, K, M	B, C, W	E	S, T	P, R	No Source Yet
M55342^02@910#&	910,000	25 (char. E, H) or 50 (char. K, M)	E, H, K, M	B, C, W	H, K	S, T	P, R	No Source Yet
M55342^02@931#&	931,000	25 (char. E, H) or 50 (char. K, M)	E, H, K, M	B, C, W	E	S, T	P, R	No Source Yet
M55342^02@953#&	953,000	25 (char. E, H) or 50 (char. K, M)	E, H, K, M	B, C, W	E	S, T	P, R	No Source Yet
M55342^02@976#&	976,000	25 (char. E, H) or 50 (char. K, M)	E, H, K, M	B, C, W	E	S, T	P, R	No Source Yet
M55342^02@1#00&	1,000,000	25 (char. E, H) or 50 (char. K, M)	E, H, K, M	B, C, W	F, T, L, P	S, T	P, R	No Source Yet
	Resistance	Power	Char.	Term.	Res. Tol./	Level 1	Level 2	
Part Number	Value (Ohms)	Rating (mW)	(^)	Type (@)	Multiplier (#)	FRL (&)	FRL (&)	Manufacturer

MIL-PRF-55342/6 (RM0705) Film Chip Resistors

5.60 Ohms Through 1,000,000 Ohms

	Resistance	Power	Char.	Term.	Resistance Tol./	Level 1	Level 2	
Part Number	Value (Ohms)	Rating (mW)	(^)	Type (@)	Multiplier (#)	FRL (&)	FRL (&)	Manufacturer
M55342^06@5#60&	5.60	50 (char. E, H) or 100 (char. K, M)	E, H, K, M	B, C, W	G, J, M	S	P, R	DAL,MSI,SOA
M55342^06@5#62&	5.62	50 (char. E, H) or 100 (char. K, M)	E, H, K, M	B, C, W	D	S	P, R	DAL,MSI,SOA
M55342^06@5#76&	5.76	50 (char. E, H) or 100 (char. K, M)	E, H, K, M	B, C, W	D	S	P, R	DAL,MSI,SOA

M55342^06@5#90&	5.90	50 (char. E, H) or 100 (char. K, M)	E, H, K, M	B, C, W	D	S	P, R	DAL,MSI,SOA
M55342^06@6#04&	6.04	50 (char. E, H) or 100 (char. K, M)	E, H, K, M	B, C, W	D	S	P, R	DAL,MSI,SOA
M55342^06@6#19&	6.19	50 (char. E, H) or 100 (char. K, M)	E, H, K, M	B, C, W	D	S	P, R	DAL,MSI,SOA
M55342^06@6#20&	6.20	50 (char. E, H) or 100 (char. K, M)	E, H, K, M	B, C, W	G, J	S	P, R	DAL,MSI,SOA
M55342^06@6#34&	6.34	50 (char. E, H) or 100 (char. K, M)	E, H, K, M	B, C, W	D	S	P, R	DAL,MSI,SOA
M55342^06@6#49&	6.49	50 (char. E, H) or 100 (char. K, M)	E, H, K, M	B, C, W	D	S	P, R	DAL,MSI,SOA
M55342^06@6#65&	6.65	50 (char. E, H) or 100 (char. K, M)	E, H, K, M	B, C, W	D	S	P, R	DAL,MSI,SOA
M55342^06@6#80&	6.80	50 (char. E, H) or 100 (char. K, M)	E, H, K, M	B, C, W	G, J, M	S	P, R	DAL,MSI,SOA
M55342^06@6#81&	6.81	50 (char. E, H) or 100 (char. K, M)	E, H, K, M	B, C, W	D	S	P, R	DAL,MSI,SOA
M55342^06@6#98&	6.98	50 (char. E, H) or 100 (char. K, M)	E, H, K, M	B, C, W	D	S	P, R	DAL,MSI,SOA
M55342^06@7#15&	7.15	50 (char. E, H) or 100 (char. K, M)	E, H, K, M	B, C, W	D	S	P, R	DAL,MSI,SOA
M55342^06@7#32&	7.32	50 (char. E, H) or 100 (char. K, M)	E, H, K, M	B, C, W	D	S	P, R	DAL,MSI,SOA
M55342^06@7#50&	7.50	50 (char. E, H) or 100 (char. K, M)	E, H, K, M	B, C, W	D, G, J	S	P, R	DAL,MSI,SOA
M55342^06@7#68&	7.68	50 (char. E, H) or 100 (char. K, M)	E, H, K, M	B, C, W	D	S	P, R	DAL,MSI,SOA
M55342^06@7#87&	7.87	50 (char. E, H) or 100 (char. K, M)	E, H, K, M	B, C, W	D	S	P, R	DAL,MSI,SOA
M55342^06@8#06&	8.06	50 (char. E, H) or 100 (char. K, M)	E, H, K, M	B, C, W	D	S	P, R	DAL,MSI,SOA
M55342^06@8#20&	8.20	50 (char. E, H) or 100 (char. K, M)	E, H, K, M	B, C, W	G, J, M	S	P, R	DAL,MSI,SOA
M55342^06@8#25&	8.25	50 (char. E, H) or 100 (char. K, M)	E, H, K, M	B, C, W	D	S	P, R	DAL,MSI,SOA
M55342^06@8#45&	8.45	50 (char. E, H) or 100 (char. K, M)	E, H, K, M	B, C, W	D	S	P, R	DAL,MSI,SOA
M55342^06@8#66&	8.66	50 (char. E, H) or 100 (char. K, M)	E, H, K, M	B, C, W	D	S	P, R	DAL,MSI,SOA
M55342^06@8#87&	8.87	50 (char. E, H) or 100 (char. K, M)	E, H, K, M	B, C, W	D	S	P, R	DAL,MSI,SOA
M55342^06@9#09&	9.09	50 (char. E, H) or 100 (char. K, M)	E, H, K, M	B, C, W	D	S	P, R	DAL,MSI,SOA
M55342^06@9#10&	9.10	50 (char. E, H) or 100 (char. K, M)	E, H, K, M	B, C, W	G, J	S	P, R	DAL,MSI,SOA
M55342^06@9#31&	9.31	50 (char. E, H) or 100 (char. K, M)	E, H, K, M	B, C, W	D	S	P, R	DAL,MSI,SOA
M55342^06@9#53&	9.53	50 (char. E, H) or 100 (char. K, M)	E, H, K, M	B, C, W	D	S	P, R	DAL,MSI,SOA
M55342^06@9#76&	9.76	50 (char. E, H) or 100 (char. K, M)	E, H, K, M	B, C, W	D	S	P, R	DAL,MSI,SOA
M55342^06@10#0&	10.0	50 (char. E, H) or 100 (char. K, M)	E, H, K, M	B, C, W	D, G, J, M	S	P, R	DAL,IRC2,MSI,SOA
M55342^06@10#2&	10.2	50 (char. E, H) or 100 (char. K, M)	E, H, K, M	B, C, W	D	S	P, R	DAL,IRC2,MSI,SOA
M55342^06@10#5&	10.5	50 (char. E, H) or 100 (char. K, M)	E, H, K, M	B, C, W	D	S	P, R	DAL,IRC2,MSI,SOA
M55342^06@10#7&	10.7	50 (char. E, H) or 100 (char. K, M)	E, H, K, M	B, C, W	D	S	P, R	DAL,IRC2,MSI,SOA
M55342^06@11#0&	11.0	50 (char. E, H) or 100 (char. K, M)	E, H, K, M	B, C, W	D, G, J	S	P, R	DAL,IRC2,MSI,SOA
M55342^06@11#3&	11.3	50 (char. E, H) or 100 (char. K, M)	E, H, K, M	B, C, W	D	S	P, R	DAL,IRC2,MSI,SOA
M55342^06@11#5&	11.5	50 (char. E, H) or 100 (char. K, M)	E, H, K, M	B, C, W	D	S	P, R	DAL,IRC2,MSI,SOA
M55342^06@11#8&	11.8	50 (char. E, H) or 100 (char. K, M)	E, H, K, M	B, C, W	D	S	P, R	DAL,IRC2,MSI,SOA
M55342^06@12#0&	12.0	50 (char. E, H) or 100 (char. K, M)	E, H, K, M	B, C, W	G, J, M	S	P, R	DAL,IRC2,MSI,SOA
M55342^06@12#1&	12.1	50 (char. E, H) or 100 (char. K, M)	E, H, K, M	B, C, W	D	S	P, R	DAL,IRC2,MSI,SOA
M55342^06@12#4&	12.4	50 (char. E, H) or 100 (char. K, M)	E, H, K, M	B, C, W	D	S	P, R	DAL,IRC2,MSI,SOA
M55342^06@12#7&	12.7	50 (char. E, H) or 100 (char. K, M)	E, H, K, M	B, C, W	D	S	P, R	DAL,IRC2,MSI,SOA
M55342^06@13#0&	13.0	50 (char. E, H) or 100 (char. K, M)	E, H, K, M	B, C, W	D, G, J	S	P, R	DAL,IRC2,MSI,SOA
M55342^06@13#3&	13.3	50 (char. E, H) or 100 (char. K, M)	E, H, K, M	B, C, W	D	S	P, R	DAL,IRC2,MSI,SOA
M55342^06@13#7&	13.7	50 (char. E, H) or 100 (char. K, M)	E, H, K, M	B, C, W	D	S	P, R	DAL,IRC2,MSI,SOA
M55342^06@14#0&	14.0	50 (char. E, H) or 100 (char. K, M)	E, H, K, M	B, C, W	D	S	P, R	DAL,IRC2,MSI,SOA
M55342^06@14#3&	14.3	50 (char. E, H) or 100 (char. K, M)	E, H, K, M	B, C, W	D	S	P, R	DAL,IRC2,MSI,SOA
M55342^06@14#7&	14.7	50 (char. E, H) or 100 (char. K, M)	E, H, K, M	B, C, W	D	S	P, R	DAL,IRC2,MSI,SOA
M55342^06@15#0&	15.0	50 (char. E, H) or 100 (char. K, M)	E, H, K, M	B, C, W	D, G, J, M	S	P, R	DAL,IRC2,MSI,SOA
M55342^06@15#4&	15.4	50 (char. E, H) or 100 (char. K, M)	E, H, K, M	B, C, W	D	S	P, R	DAL,IRC2,MSI,SOA
M55342^06@15#8&	15.8	50 (char. E, H) or 100 (char. K, M)	E, H, K, M	B, C, W	D	S	P, R	DAL,IRC2,MSI,SOA

M55342^06@16#0&	16.0	50 (char. E, H) or 100 (char. K, M)	E, H, K, M	B, C, W	G, J	S	P, R	DAL,IRC2,MSI,SOA
M55342^06@16#2&	16.2	50 (char. E, H) or 100 (char. K, M)	E, H, K, M	B, C, W	D	S	P, R	DAL,IRC2,MSI,SOA
M55342^06@16#5&	16.5	50 (char. E, H) or 100 (char. K, M)	E, H, K, M	B, C, W	D	S	P, R	DAL,IRC2,MSI,SOA
M55342^06@16#9&	16.9	50 (char. E, H) or 100 (char. K, M)	E, H, K, M	B, C, W	D	S	P, R	DAL,IRC2,MSI,SOA
M55342^06@17#4&	17.4	50 (char. E, H) or 100 (char. K, M)	E, H, K, M	B, C, W	D	S	P, R	DAL,IRC2,MSI,SOA
M55342^06@17#8&	17.8	50 (char. E, H) or 100 (char. K, M)	E, H, K, M	B, C, W	D	S	P, R	DAL,IRC2,MSI,SOA
M55342^06@18#0&	18.0	50 (char. E, H) or 100 (char. K, M)	E, H, K, M	B, C, W	G, J, M	S	P, R	DAL,IRC2,MSI,SOA
M55342^06@18#2&	18.2	50 (char. E, H) or 100 (char. K, M)	E, H, K, M	B, C, W	D	S	P, R	DAL,IRC2,MSI,SOA
M55342^06@18#7&	18.7	50 (char. E, H) or 100 (char. K, M)	E, H, K, M	B, C, W	D	S	P, R	DAL,IRC2,MSI,SOA
M55342^06@19#1&	19.1	50 (char. E, H) or 100 (char. K, M)	E, H, K, M	B, C, W	D	S	P, R	DAL,IRC2,MSI,SOA
M55342^06@19#6&	19.6	50 (char. E, H) or 100 (char. K, M)	E, H, K, M	B, C, W	D	S	P, R	DAL,IRC2,MSI,SOA
M55342^06@20#0&	20.0	50 (char. E, H) or 100 (char. K, M)	E, H, K, M	B, C, W	D, G, J, M	S	P, R	DAL,IRC2,MSI,OHM, SOA
M55342^06@20#5&	20.5	50 (char. E, H) or 100 (char. K, M)	E, H, K, M	B, C, W	D	S	P, R	DAL,IRC2,MSI,OHM, SOA
M55342^06@21#0&	21.0	50 (char. E, H) or 100 (char. K, M)	E, H, K, M	B, C, W	D	S	P, R	DAL,IRC2,MSI,OHM, SOA
M55342^06@21#5&	21.5	50 (char. E, H) or 100 (char. K, M)	E, H, K, M	B, C, W	D	S	P, R	DAL,IRC2,MSI,OHM, SOA
M55342^06@22#0&	22.0	50 (char. E, H) or 100 (char. K, M)	E, H, K, M	B, C, W	G, J, M	S	P, R	DAL,IRC2,MSI,OHM, SOA
M55342^06@22#1&	22.1	50 (char. E, H) or 100 (char. K, M)	E, H, K, M	B, C, W	D	S	P, R	DAL,IRC2,MSI,OHM, SOA
M55342^06@22#6&	22.6	50 (char. E, H) or 100 (char. K, M)	E, H, K, M	B, C, W	D	S	P, R	DAL,IRC2,MSI,OHM, SOA
M55342^06@23#2&	23.2	50 (char. E, H) or 100 (char. K, M)	E, H, K, M	B, C, W	D	S	P, R	DAL,IRC2,MSI,OHM, SOA
M55342^06@23#7&	23.7	50 (char. E, H) or 100 (char. K, M)	E, H, K, M	B, C, W	D	S	P, R	DAL,IRC2,MSI,OHM, SOA
M55342^06@24#0&	24.0	50 (char. E, H) or 100 (char. K, M)	E, H, K, M	B, C, W	G, J	S	P, R	DAL,IRC2,MSI,OHM, SOA
M55342^06@24#3&	24.3	50 (char. E, H) or 100 (char. K, M)	E, H, K, M	B, C, W	D	S	P, R	DAL,IRC2,MSI,OHM, SOA
M55342^06@24#9&	24.9	50 (char. E, H) or 100 (char. K, M)	E, H, K, M	B, C, W	D	S	P, R	DAL,IRC2,MSI,OHM, SOA
M55342^06@25#5&	25.5	50 (char. E, H) or 100 (char. K, M)	E, H, K, M	B, C, W	D	S	P, R	DAL,IRC2,MSI,OHM, SOA
M55342^06@26#1&	26.1	50 (char. E, H) or 100 (char. K, M)	E, H, K, M	B, C, W	D	S	P, R	DAL,IRC2,MSI,OHM, SOA
M55342^06@26#7&	26.7	50 (char. E, H) or 100 (char. K, M)	E, H, K, M	B, C, W	D	S	P, R	DAL,IRC2,MSI,OHM, SOA
M55342^06@27#0&	27.0	50 (char. E, H) or 100 (char. K, M)	E, H, K, M	B, C, W	G, J, M	S	P, R	DAL,IRC2,MSI,OHM, SOA
M55342^06@27#4&	27.4	50 (char. E, H) or 100 (char. K, M)	E, H, K, M	B, C, W	D	S	P, R	DAL,IRC2,MSI,OHM, SOA
M55342^06@28#0&	28.0	50 (char. E, H) or 100 (char. K, M)	E, H, K, M	B, C, W	D	S	P, R	DAL,IRC2,MSI,OHM, SOA
M55342^06@28#7&	28.7	50 (char. E, H) or 100 (char. K, M)	E, H, K, M	B, C, W	D	S	P, R	DAL,IRC2,MSI,OHM, SOA
M55342^06@29#4&	29.4	50 (char. E, H) or 100 (char. K, M)	E, H, K, M	B, C, W	D	S	P, R	DAL,IRC2,MSI,OHM, SOA
M55342^06@30#0&	30.0	50 (char. E, H) or 100 (char. K, M)	E, H, K, M	B, C, W	G, J	S	P, R	DAL,IRC2,MSI,OHM, SOA
M55342^06@30#1&	30.1	50 (char. E, H) or 100 (char. K, M)	E, H, K, M	B, C, W	D	S	P, R	DAL,IRC2,MSI,OHM, SOA
M55342^06@30#9&	30.9	50 (char. E, H) or 100 (char. K, M)	E, H, K, M	B, C, W	D	S	P, R	DAL,IRC2,MSI,OHM, SOA
M55342^06@31#6&	31.6	50 (char. E, H) or 100 (char. K, M)	E, H, K, M	B, C, W	D	S	P, R	DAL,IRC2,MSI,OHM, SOA
M55342^06@32#4&	32.4	50 (char. E, H) or 100 (char. K, M)	E, H, K, M	B, C, W	D	S	P, R	DAL,IRC2,MSI,OHM, SOA
M55342^06@33#0&	33.0	50 (char. E, H) or 100 (char. K, M)	E, H, K, M	B, C, W	G, J, M	S	P, R	DAL,IRC2,MSI,OHM, SOA
M55342^06@33#2&	33.2	50 (char. E, H) or 100 (char. K, M)	E, H, K, M	B, C, W	D	S	P, R	DAL,IRC2,MSI,OHM, SOA
M55342^06@34#0&	34.0	50 (char. E, H) or 100 (char. K, M)	E, H, K, M	B, C, W	D	S	P, R	DAL,IRC2,MSI,OHM, SOA
M55342^06@34#8&	34.8	50 (char. E, H) or 100 (char. K, M)	E, H, K, M	B, C, W	D	S	P, R	DAL,IRC2,MSI,OHM, SOA
M55342^06@35#7&	35.7	50 (char. E, H) or 100 (char. K, M)	E, H, K, M	B, C, W	D	S	P, R	DAL,IRC2,MSI,OHM, SOA
M55342^06@36#0&	36.0	50 (char. E, H) or 100 (char. K, M)	E, H, K, M	B, C, W	G, J	S	P, R	DAL,IRC2,MSI,OHM, SOA
M55342^06@36#5&	36.5	50 (char. E, H) or 100 (char. K, M)	E, H, K, M	B, C, W	D	S	P, R	DAL,IRC2,MSI,OHM, SOA
M55342^06@37#4&	37.4	50 (char. E, H) or 100 (char. K, M)	E, H, K, M	B, C, W	D	S	P, R	DAL,IRC2,MSI,OHM, SOA
M55342^06@38#3&	38.3	50 (char. E, H) or 100 (char. K, M)	E, H, K, M	B, C, W	D	S	P, R	DAL,IRC2,MSI,OHM, SOA
M55342^06@39#0&	39.0	50 (char. E, H) or 100 (char. K, M)	E, H, K, M	B, C, W	G, J, M	S	P, R	DAL,IRC2,MSI,OHM, SOA
M55342^06@39#2&	39.2	50 (char. E, H) or 100 (char. K, M)	E, H, K, M	B, C, W	D	S	P, R	DAL,IRC2,MSI,OHM, SOA

M55342^06@40#2&	40.2	50 (char. E, H) or 100 (char. K, M)	E, H, K, M	B, C, W	D	S	P, R	DAL,IRC2,MSI,OHM, SOA
M55342^06@41#2&	41.2	50 (char. E, H) or 100 (char. K, M)	E, H, K, M	B, C, W	D	S	P, R	DAL,IRC2,MSI,OHM, SOA
M55342^06@42#2&	42.2	50 (char. E, H) or 100 (char. K, M)	E, H, K, M	B, C, W	D	S	P, R	DAL,IRC2,MSI,OHM, SOA
M55342^06@43#0&	43.0	50 (char. E, H) or 100 (char. K, M)	E, H, K, M	B, C, W	G, J	S	P, R	DAL,IRC2,MSI,OHM, SOA
M55342^06@43#2&	43.2	50 (char. E, H) or 100 (char. K, M)	E, H, K, M	B, C, W	D	S	P, R	DAL,IRC2,MSI,OHM, SOA
M55342^06@44#2&	44.2	50 (char. E, H) or 100 (char. K, M)	E, H, K, M	B, C, W	D	S	P, R	DAL,IRC2,MSI,OHM, SOA
M55342^06@45#3&	45.3	50 (char. E, H) or 100 (char. K, M)	E, H, K, M	B, C, W	D	S	P, R	DAL,IRC2,MSI,OHM, SOA
M55342^06@46#4&	46.4	50 (char. E, H) or 100 (char. K, M)	E, H, K, M	B, C, W	D	S	P, R	DAL,IRC2,MSI,OHM, SOA
M55342^06@47#0&	47.0	50 (char. E, H) or 100 (char. K, M)	E, H, K, M	B, C, W	G, J, M	S	P, R	DAL,IRC2,MSI,OHM, SOA
M55342^06@47#5&	47.5	50 (char. E, H) or 100 (char. K, M)	E, H, K, M	B, C, W	D	S	P, R	DAL,IRC2,MSI,OHM, SOA
M55342^06@48#7&	48.7	50 (char. E, H) or 100 (char. K, M)	E, H, K, M	B, C, W	D	S	P, R	DAL,IRC2,MSI,OHM, SOA
M55342^06@49#9&	49.9	50 (char. E, H) or 100 (char. K, M)	E, H, K, M	B, C, W	D	S	P, R	DAL,IRC2,MSI,OHM, SOA
M55342^06@51#0&	51.0	50 (char. E, H) or 100 (char. K, M)	E, H, K, M	B, C, W	G, J	S	P, R	DAL,IRC2,MSI,OHM, SOA
M55342^06@51#1&	51.1	50 (char. E, H) or 100 (char. K, M)	E, H, K, M	B, C, W	D	S	P, R	DAL,IRC2,MSI,OHM, SOA
M55342^06@52#3&	52.3	50 (char. E, H) or 100 (char. K, M)	E, H, K, M	B, C, W	D	S	P, R	DAL,IRC2,MSI,OHM, SOA
M55342^06@53#6&	53.6	50 (char. E, H) or 100 (char. K, M)	E, H, K, M	B, C, W	D	S	P, R	DAL,IRC2,MSI,OHM, SOA
M55342^06@54#9&	54.9	50 (char. E, H) or 100 (char. K, M)	E, H, K, M	B, C, W	D	S	P, R	DAL,IRC2,MSI,OHM, SOA
M55342^06@56#0&	56.0	50 (char. E, H) or 100 (char. K, M)	E, H, K, M	B, C, W	G, J, M	S	P, R	DAL,IRC2,MSI,OHM, SOA
M55342^06@56#2&	56.2	50 (char. E, H) or 100 (char. K, M)	E, H, K, M	B, C, W	D	S	P, R	DAL,IRC2,MSI,OHM, SOA
M55342^06@57#6&	57.6	50 (char. E, H) or 100 (char. K, M)	E, H, K, M	B, C, W	D	S	P, R	DAL,IRC2,MSI,OHM, SOA
M55342^06@59#0&	59.0	50 (char. E, H) or 100 (char. K, M)	E, H, K, M	B, C, W	D	S	P, R	DAL,IRC2,MSI,OHM, SOA
M55342^06@60#4&	60.4	50 (char. E, H) or 100 (char. K, M)	E, H, K, M	B, C, W	D	S	P, R	DAL,IRC2,MSI,OHM, SOA
M55342^06@61#9&	61.9	50 (char. E, H) or 100 (char. K, M)	E, H, K, M	B, C, W	D	S	P, R	DAL,IRC2,MSI,OHM, SOA
M55342^06@62#0&	62.0	50 (char. E, H) or 100 (char. K, M)	E, H, K, M	B, C, W	G, J	S	P, R	DAL,IRC2,MSI,OHM, SOA
M55342^06@63#4&	63.4	50 (char. E, H) or 100 (char. K, M)	E, H, K, M	B, C, W	D	S	P, R	DAL,IRC2,MSI,OHM, SOA
M55342^06@64#9&	64.9	50 (char. E, H) or 100 (char. K, M)	E, H, K, M	B, C, W	D	S	P, R	DAL,IRC2,MSI,OHM, SOA
M55342^06@66#5&	66.5	50 (char. E, H) or 100 (char. K, M)	E, H, K, M	B, C, W	D	S	P, R	DAL,IRC2,MSI,OHM, SOA
M55342^06@68#0&	68.0	50 (char. E, H) or 100 (char. K, M)	E, H, K, M	B, C, W	G, J, M	S	P, R	DAL,IRC2,MSI,OHM, SOA
M55342^06@68#1&	68.1	50 (char. E, H) or 100 (char. K, M)	E, H, K, M	B, C, W	D	S	P, R	DAL,IRC2,MSI,OHM, SOA
M55342^06@69#8&	69.8	50 (char. E, H) or 100 (char. K, M)	E, H, K, M	B, C, W	D	S	P, R	DAL,IRC2,MSI,OHM, SOA
M55342^06@71#5&	71.5	50 (char. E, H) or 100 (char. K, M)	E, H, K, M	B, C, W	D	S	P, R	DAL,IRC2,MSI,OHM, SOA
M55342^06@73#2&	73.2	50 (char. E, H) or 100 (char. K, M)	E, H, K, M	B, C, W	D	S	P, R	DAL,IRC2,MSI,OHM, SOA
M55342^06@75#0&	75.0	50 (char. E, H) or 100 (char. K, M)	E, H, K, M	B, C, W	D, G, J	S	P, R	DAL,IRC2,MSI,OHM, SOA
M55342^06@76#8&	76.8	50 (char. E, H) or 100 (char. K, M)	E, H, K, M	B, C, W	D	S	P, R	DAL,IRC2,MSI,OHM, SOA
M55342^06@78#7&	78.7	50 (char. E, H) or 100 (char. K, M)	E, H, K, M	B, C, W	D	S	P, R	DAL,IRC2,MSI,OHM, SOA
M55342^06@80#6&	80.6	50 (char. E, H) or 100 (char. K, M)	E, H, K, M	B, C, W	D	S	P, R	DAL,IRC2,MSI,OHM, SOA
M55342^06@82#0&	82.0	50 (char. E, H) or 100 (char. K, M)	E, H, K, M	B, C, W	G, J, M	S	P, R	DAL,IRC2,MSI,OHM, SOA
M55342^06@82#5&	82.5	50 (char. E, H) or 100 (char. K, M)	E, H, K, M	B, C, W	D	S	P, R	DAL,IRC2,MSI,OHM, SOA
M55342^06@84#5&	84.5	50 (char. E, H) or 100 (char. K, M)	E, H, K, M	B, C, W	D	S	P, R	DAL,IRC2,MSI,OHM, SOA
M55342^06@86#6&	86.6	50 (char. E, H) or 100 (char. K, M)	E, H, K, M	B, C, W	D	S	P, R	DAL,IRC2,MSI,OHM, SOA
M55342^06@88#7&	88.7	50 (char. E, H) or 100 (char. K, M)	E, H, K, M	B, C, W	D	S	P, R	DAL,IRC2,MSI,OHM, SOA
M55342^06@90#9&	90.9	50 (char. E, H) or 100 (char. K, M)	E, H, K, M	B, C, W	D	S	P, R	DAL,IRC2,MSI,OHM, SOA
M55342^06@91#0&	91.0	50 (char. E, H) or 100 (char. K, M)	E, H, K, M	B, C, W	G, J	S	P, R	DAL,IRC2,MSI,OHM, SOA
M55342^06@93#1&	93.1	50 (char. E, H) or 100 (char. K, M)	E, H, K, M	B, C, W	D	S	P, R	DAL,IRC2,MSI,OHM, SOA
M55342^06@95#3&	95.3	50 (char. E, H) or 100 (char. K, M)	E, H, K, M	B, C, W	D	S	P, R	DAL,IRC2,MSI,OHM, SOA
M55342^06@97#6&	97.6	50 (char. E, H) or 100 (char. K, M)	E, H, K, M	B, C, W	D	S	P, R	DAL,IRC2,MSI,OHM, SOA
M55342^06@100#&	100	50 (char. E, H) or 100 (char. K, M)	E, H, K, M	B, C, W	D, G, J, M	S	P, R	DAL,IRC2,MSI,OHM, SOA

M55342^06@102#&	102	50 (char. E, H) or 100 (char. K, M)	E, H, K, M	B, C, W	D	S	P, R	DAL,IRC2,MSI,OHM, SOA
M55342^06@105#&	105	50 (char. E, H) or 100 (char. K, M)	E, H, K, M	B, C, W	D	S	P, R	DAL,IRC2,MSI,OHM, SOA
M55342^06@107#&	107	50 (char. E, H) or 100 (char. K, M)	E, H, K, M	B, C, W	D	S	P, R	DAL,IRC2,MSI,OHM, SOA
M55342^06@110#&	110	50 (char. E, H) or 100 (char. K, M)	E, H, K, M	B, C, W	D, G, J	S	P, R	DAL,IRC2,MSI,OHM, SOA
M55342^06@113#&	113	50 (char. E, H) or 100 (char. K, M)	E, H, K, M	B, C, W	D	S	P, R	DAL,IRC2,MSI,OHM, SOA
M55342^06@115#&	115	50 (char. E, H) or 100 (char. K, M)	E, H, K, M	B, C, W	D	S	P, R	DAL,IRC2,MSI,OHM, SOA
M55342^06@118#&	118	50 (char. E, H) or 100 (char. K, M)	E, H, K, M	B, C, W	D	S	P, R	DAL,IRC2,MSI,OHM, SOA
M55342^06@120#&	120	50 (char. E, H) or 100 (char. K, M)	E, H, K, M	B, C, W	G, J, M	S	P, R	DAL,IRC2,MSI,OHM, SOA
M55342^06@121#&	121	50 (char. E, H) or 100 (char. K, M)	E, H, K, M	B, C, W	D	S	P, R	DAL,IRC2,MSI,OHM, SOA
M55342^06@124#&	124	50 (char. E, H) or 100 (char. K, M)	E, H, K, M	B, C, W	D	S	P, R	DAL,IRC2,MSI,OHM, SOA
M55342^06@127#&	127	50 (char. E, H) or 100 (char. K, M)	E, H, K, M	B, C, W	D	S	P, R	DAL,IRC2,MSI,OHM, SOA
M55342^06@130#&	130	50 (char. E, H) or 100 (char. K, M)	E, H, K, M	B, C, W	D, G, J	S	P, R	DAL,IRC2,MSI,OHM, SOA
M55342^06@133#&	133	50 (char. E, H) or 100 (char. K, M)	E, H, K, M	B, C, W	D	S	P, R	DAL,IRC2,MSI,OHM, SOA
M55342^06@137#&	137	50 (char. E, H) or 100 (char. K, M)	E, H, K, M	B, C, W	D	S	P, R	DAL,IRC2,MSI,OHM, SOA
M55342^06@140#&	140	50 (char. E, H) or 100 (char. K, M)	E, H, K, M	B, C, W	D	S	P, R	DAL,IRC2,MSI,OHM, SOA
M55342^06@143#&	143	50 (char. E, H) or 100 (char. K, M)	E, H, K, M	B, C, W	D	S	P, R	DAL,IRC2,MSI,OHM, SOA
M55342^06@147#&	147	50 (char. E, H) or 100 (char. K, M)	E, H, K, M	B, C, W	D	S	P, R	DAL,IRC2,MSI,OHM, SOA
M55342^06@150#&	150	50 (char. E, H) or 100 (char. K, M)	E, H, K, M	B, C, W	D, G, J, M	S	P, R	DAL,IRC2,MSI,OHM, SOA
M55342^06@154#&	154	50 (char. E, H) or 100 (char. K, M)	E, H, K, M	B, C, W	D	S	P, R	DAL,IRC2,MSI,OHM, SOA
M55342^06@158#&	158	50 (char. E, H) or 100 (char. K, M)	E, H, K, M	B, C, W	D	S	P, R	DAL,IRC2,MSI,OHM, SOA
M55342^06@160#&	160	50 (char. E, H) or 100 (char. K, M)	E, H, K, M	B, C, W	G, J	S	P, R	DAL,IRC2,MSI,OHM, SOA
M55342^06@162#&	162	50 (char. E, H) or 100 (char. K, M)	E, H, K, M	B, C, W	D	S	P, R	DAL,IRC2,MSI,OHM, SOA
M55342^06@165#&	165	50 (char. E, H) or 100 (char. K, M)	E, H, K, M	B, C, W	D	S	P, R	DAL,IRC2,MSI,OHM, SOA
M55342^06@169#&	169	50 (char. E, H) or 100 (char. K, M)	E, H, K, M	B, C, W	D	S	P, R	DAL,IRC2,MSI,OHM, SOA
M55342^06@174#&	174	50 (char. E, H) or 100 (char. K, M)	E, H, K, M	B, C, W	D	S	P, R	DAL,IRC2,MSI,OHM, SOA
M55342^06@178#&	178	50 (char. E, H) or 100 (char. K, M)	E, H, K, M	B, C, W	D	S	P, R	DAL,IRC2,MSI,OHM, SOA
M55342^06@180#&	180	50 (char. E, H) or 100 (char. K, M)	E, H, K, M	B, C, W	G, J, M	S	P, R	DAL,IRC2,MSI,OHM, SOA
M55342^06@182#&	182	50 (char. E, H) or 100 (char. K, M)	E, H, K, M	B, C, W	D	S	P, R	DAL,IRC2,MSI,OHM, SOA
M55342^06@187#&	187	50 (char. E, H) or 100 (char. K, M)	E, H, K, M	B, C, W	D	S	P, R	DAL,IRC2,MSI,OHM, SOA
M55342^06@191#&	191	50 (char. E, H) or 100 (char. K, M)	E, H, K, M	B, C, W	D	S	P, R	DAL,IRC2,MSI,OHM, SOA
M55342^06@196#&	196	50 (char. E, H) or 100 (char. K, M)	E, H, K, M	B, C, W	D	S	P, R	DAL,IRC2,MSI,OHM, SOA
M55342^06@200#&	200	50 (char. E, H) or 100 (char. K, M)	E, H, K, M	B, C, W	D, G, J, M	S	P, R	DAL,IRC2,MSI,OHM, SOA
M55342^06@205#&	205	50 (char. E, H) or 100 (char. K, M)	E, H, K, M	B, C, W	D	S	P, R	DAL,IRC2,MSI,OHM, SOA
M55342^06@210#&	210	50 (char. E, H) or 100 (char. K, M)	E, H, K, M	B, C, W	D	S	P, R	DAL,IRC2,MSI,OHM, SOA
M55342^06@215#&	215	50 (char. E, H) or 100 (char. K, M)	E, H, K, M	B, C, W	D	S	P, R	DAL,IRC2,MSI,OHM, SOA
M55342^06@220#&	220	50 (char. E, H) or 100 (char. K, M)	E, H, K, M	B, C, W	G, J, M	S	P, R	DAL,IRC2,MSI,OHM, SOA
M55342^06@221#&	221	50 (char. E, H) or 100 (char. K, M)	E, H, K, M	B, C, W	D	S	P, R	DAL,IRC2,MSI,OHM, SOA
M55342^06@226#&	226	50 (char. E, H) or 100 (char. K, M)	E, H, K, M	B, C, W	D	S	P, R	DAL,IRC2,MSI,OHM, SOA
M55342^06@232#&	232	50 (char. E, H) or 100 (char. K, M)	E, H, K, M	B, C, W	D	S	P, R	DAL,IRC2,MSI,OHM, SOA
M55342^06@237#&	237	50 (char. E, H) or 100 (char. K, M)	E, H, K, M	B, C, W	D	S	P, R	DAL,IRC2,MSI,OHM, SOA
M55342^06@240#&	240	50 (char. E, H) or 100 (char. K, M)	E, H, K, M	B, C, W	G, J	S	P, R	DAL,IRC2,MSI,OHM, SOA
M55342^06@243#&	243	50 (char. E, H) or 100 (char. K, M)	E, H, K, M	B, C, W	D	S	P, R	DAL,IRC2,MSI,OHM, SOA
M55342^06@249#&	249	50 (char. E, H) or 100 (char. K, M)	E, H, K, M	B, C, W	D	S	P, R	DAL,IRC2,MSI,OHM, SOA
M55342^06@255#&	255	50 (char. E, H) or 100 (char. K, M)	E, H, K, M	B, C, W	D	S	P, R	DAL,IRC2,MSI,OHM, SOA
M55342^06@261#&	261	50 (char. E, H) or 100 (char. K, M)	E, H, K, M	B, C, W	D	S	P, R	DAL,IRC2,MSI,OHM, SOA
M55342^06@267#&	267	50 (char. E, H) or 100 (char. K, M)	E, H, K, M	B, C, W	D	S	P, R	DAL,IRC2,MSI,OHM, SOA
M55342^06@270#&	270	50 (char. E, H) or 100 (char. K, M)	E, H, K, M	B, C, W	G, J, M	S	P, R	DAL,IRC2,MSI,OHM, SOA

M55342^06@274#&	274	50 (char. E, H) or 100 (char. K, M)	E, H, K, M	B, C, W	D	S	P, R	DAL,IRC2,MSI,OHM, SOA
M55342^06@280#&	280	50 (char. E, H) or 100 (char. K, M)	E, H, K, M	B, C, W	D	S	P, R	DAL,IRC2,MSI,OHM, SOA
M55342^06@287#&	287	50 (char. E, H) or 100 (char. K, M)	E, H, K, M	B, C, W	D	S	P, R	DAL,IRC2,MSI,OHM, SOA
M55342^06@294#&	294	50 (char. E, H) or 100 (char. K, M)	E, H, K, M	B, C, W	D	S	P, R	DAL,IRC2,MSI,OHM, SOA
M55342^06@300#&	300	50 (char. E, H) or 100 (char. K, M)	E, H, K, M	B, C, W	G, J	S	P, R	DAL,IRC2,MSI,OHM, SOA
M55342^06@301#&	301	50 (char. E, H) or 100 (char. K, M)	E, H, K, M	B, C, W	D	S	P, R	DAL,IRC2,MSI,OHM, SOA
M55342^06@309#&	309	50 (char. E, H) or 100 (char. K, M)	E, H, K, M	B, C, W	D	S	P, R	DAL,IRC2,MSI,OHM, SOA
M55342^06@316#&	316	50 (char. E, H) or 100 (char. K, M)	E, H, K, M	B, C, W	D	S	P, R	DAL,IRC2,MSI,OHM, SOA
M55342^06@324#&	324	50 (char. E, H) or 100 (char. K, M)	E, H, K, M	B, C, W	D	S	P, R	DAL,IRC2,MSI,OHM, SOA
M55342^06@330#&	330	50 (char. E, H) or 100 (char. K, M)	E, H, K, M	B, C, W	G, J, M	S	P, R	DAL,IRC2,MSI,OHM, SOA
M55342^06@332#&	332	50 (char. E, H) or 100 (char. K, M)	E, H, K, M	B, C, W	D	S	P, R	DAL,IRC2,MSI,OHM, SOA
M55342^06@340#&	340	50 (char. E, H) or 100 (char. K, M)	E, H, K, M	B, C, W	D	S	P, R	DAL,IRC2,MSI,OHM, SOA
M55342^06@348#&	348	50 (char. E, H) or 100 (char. K, M)	E, H, K, M	B, C, W	D	S	P, R	DAL,IRC2,MSI,OHM, SOA
M55342^06@357#&	357	50 (char. E, H) or 100 (char. K, M)	E, H, K, M	B, C, W	D	S	P, R	DAL,IRC2,MSI,OHM, SOA
M55342^06@360#&	360	50 (char. E, H) or 100 (char. K, M)	E, H, K, M	B, C, W	G, J	S	P, R	DAL,IRC2,MSI,OHM, SOA
M55342^06@365#&	365	50 (char. E, H) or 100 (char. K, M)	E, H, K, M	B, C, W	D	S	P, R	DAL,IRC2,MSI,OHM, SOA
M55342^06@374#&	374	50 (char. E, H) or 100 (char. K, M)	E, H, K, M	B, C, W	D	S	P, R	DAL,IRC2,MSI,OHM, SOA
M55342^06@383#&	383	50 (char. E, H) or 100 (char. K, M)	E, H, K, M	B, C, W	D	S	P, R	DAL,IRC2,MSI,OHM, SOA
M55342^06@390#&	390	50 (char. E, H) or 100 (char. K, M)	E, H, K, M	B, C, W	G, J, M	S	P, R	DAL,IRC2,MSI,OHM, SOA
M55342^06@392#&	392	50 (char. E, H) or 100 (char. K, M)	E, H, K, M	B, C, W	D	S	P, R	DAL,IRC2,MSI,OHM, SOA
M55342^06@402#&	402	50 (char. E, H) or 100 (char. K, M)	E, H, K, M	B, C, W	D	S	P, R	DAL,IRC2,MSI,OHM, SOA
M55342^06@412#&	412	50 (char. E, H) or 100 (char. K, M)	E, H, K, M	B, C, W	D	S	P, R	DAL,IRC2,MSI,OHM, SOA
M55342^06@422#&	422	50 (char. E, H) or 100 (char. K, M)	E, H, K, M	B, C, W	D	S	P, R	DAL,IRC2,MSI,OHM, SOA
M55342^06@430#&	430	50 (char. E, H) or 100 (char. K, M)	E, H, K, M	B, C, W	G, J	S	P, R	DAL,IRC2,MSI,OHM, SOA
M55342^06@432#&	432	50 (char. E, H) or 100 (char. K, M)	E, H, K, M	B, C, W	D	S	P, R	DAL,IRC2,MSI,OHM, SOA
M55342^06@442#&	442	50 (char. E, H) or 100 (char. K, M)	E, H, K, M	B, C, W	D	S	P, R	DAL,IRC2,MSI,OHM, SOA
M55342^06@453#&	453	50 (char. E, H) or 100 (char. K, M)	E, H, K, M	B, C, W	D	S	P, R	DAL,IRC2,MSI,OHM, SOA
M55342^06@464#&	464	50 (char. E, H) or 100 (char. K, M)	E, H, K, M	B, C, W	D	S	P, R	DAL,IRC2,MSI,OHM, SOA
M55342^06@470#&	470	50 (char. E, H) or 100 (char. K, M)	E, H, K, M	B, C, W	G, J, M	S	P, R	DAL,IRC2,MSI,OHM, SOA
M55342^06@475#&	475	50 (char. E, H) or 100 (char. K, M)	E, H, K, M	B, C, W	D	S	P, R	DAL,IRC2,MSI,OHM, SOA
M55342^06@487#&	487	50 (char. E, H) or 100 (char. K, M)	E, H, K, M	B, C, W	D	S	P, R	DAL,IRC2,MSI,OHM, SOA
M55342^06@499#&	499	50 (char. E, H) or 100 (char. K, M)	E, H, K, M	B, C, W	D	S	P, R	DAL,IRC2,MSI,OHM, SOA
M55342^06@510#&	510	50 (char. E, H) or 100 (char. K, M)	E, H, K, M	B, C, W	G, J	S	P, R	DAL,IRC2,MSI,OHM, SOA
M55342^06@511#&	511	50 (char. E, H) or 100 (char. K, M)	E, H, K, M	B, C, W	D	S	P, R	DAL,IRC2,MSI,OHM, SOA
M55342^06@523#&	523	50 (char. E, H) or 100 (char. K, M)	E, H, K, M	B, C, W	D	S	P, R	DAL,IRC2,MSI,OHM, SOA
M55342^06@536#&	536	50 (char. E, H) or 100 (char. K, M)	E, H, K, M	B, C, W	D	S	P, R	DAL,IRC2,MSI,OHM, SOA
M55342^06@549#&	549	50 (char. E, H) or 100 (char. K, M)	E, H, K, M	B, C, W	D	S	P, R	DAL,IRC2,MSI,OHM, SOA
M55342^06@560#&	560	50 (char. E, H) or 100 (char. K, M)	E, H, K, M	B, C, W	G, J, M	S	P, R	DAL,IRC2,MSI,OHM, SOA
M55342^06@562#&	562	50 (char. E, H) or 100 (char. K, M)	E, H, K, M	B, C, W	D	S	P, R	DAL,IRC2,MSI,OHM, SOA
M55342^06@576#&	576	50 (char. E, H) or 100 (char. K, M)	E, H, K, M	B, C, W	D	S	P, R	DAL,IRC2,MSI,OHM, SOA
M55342^06@590#&	590	50 (char. E, H) or 100 (char. K, M)	E, H, K, M	B, C, W	D	S	P, R	DAL,IRC2,MSI,OHM, SOA
M55342^06@604#&	604	50 (char. E, H) or 100 (char. K, M)	E, H, K, M	B, C, W	D	S	P, R	DAL,IRC2,MSI,OHM, SOA
M55342^06@619#&	619	50 (char. E, H) or 100 (char. K, M)	E, H, K, M	B, C, W	D	S	P, R	DAL,IRC2,MSI,OHM, SOA
M55342^06@620#&	620	50 (char. E, H) or 100 (char. K, M)	E, H, K, M	B, C, W	G, J	S	P, R	DAL,IRC2,MSI,OHM, SOA
M55342^06@634#&	634	50 (char. E, H) or 100 (char. K, M)	E, H, K, M	B, C, W	D	S	P, R	DAL,IRC2,MSI,OHM, SOA
M55342^06@649#&	649	50 (char. E, H) or 100 (char. K, M)	E, H, K, M	B, C, W	D	S	P, R	DAL,IRC2,MSI,OHM, SOA
M55342^06@665#&	665	50 (char. E, H) or 100 (char. K, M)	E, H, K, M	B, C, W	D	S	P, R	DAL,IRC2,MSI,OHM, SOA

M55342^06@680#&	680	50 (char. E, H) or 100 (char. K, M)	E, H, K, M	B, C, W	G, J, M	S	P, R	DAL,IRC2,MSI,OHM, SOA
M55342^06@681#&	681	50 (char. E, H) or 100 (char. K, M)	E, H, K, M	B, C, W	D	S	P, R	DAL,IRC2,MSI,OHM, SOA
M55342^06@698#&	698	50 (char. E, H) or 100 (char. K, M)	E, H, K, M	B, C, W	D	S	P, R	DAL,IRC2,MSI,OHM, SOA
M55342^06@715#&	715	50 (char. E, H) or 100 (char. K, M)	E, H, K, M	B, C, W	D	S	P, R	DAL,IRC2,MSI,OHM, SOA
M55342^06@732#&	732	50 (char. E, H) or 100 (char. K, M)	E, H, K, M	B, C, W	D	S	P, R	DAL,IRC2,MSI,OHM, SOA
M55342^06@750#&	750	50 (char. E, H) or 100 (char. K, M)	E, H, K, M	B, C, W	D, G, J	S	P, R	DAL,IRC2,MSI,OHM, SOA
M55342^06@768#&	768	50 (char. E, H) or 100 (char. K, M)	E, H, K, M	B, C, W	D	S	P, R	DAL,IRC2,MSI,OHM, SOA
M55342^06@787#&	787	50 (char. E, H) or 100 (char. K, M)	E, H, K, M	B, C, W	D	S	P, R	DAL,IRC2,MSI,OHM, SOA
M55342^06@806#&	806	50 (char. E, H) or 100 (char. K, M)	E, H, K, M	B, C, W	D	S	P, R	DAL,IRC2,MSI,OHM, SOA
M55342^06@820#&	820	50 (char. E, H) or 100 (char. K, M)	E, H, K, M	B, C, W	G, J, M	S	P, R	DAL,IRC2,MSI,OHM, SOA
M55342^06@825#&	825	50 (char. E, H) or 100 (char. K, M)	E, H, K, M	B, C, W	D	S	P, R	DAL,IRC2,MSI,OHM, SOA
M55342^06@845#&	845	50 (char. E, H) or 100 (char. K, M)	E, H, K, M	B, C, W	D	S	P, R	DAL,IRC2,MSI,OHM, SOA
M55342^06@866#&	866	50 (char. E, H) or 100 (char. K, M)	E, H, K, M	B, C, W	D	S	P, R	DAL,IRC2,MSI,OHM, SOA
M55342^06@887#&	887	50 (char. E, H) or 100 (char. K, M)	E, H, K, M	B, C, W	D	S	P, R	DAL,IRC2,MSI,OHM, SOA
M55342^06@909#&	909	50 (char. E, H) or 100 (char. K, M)	E, H, K, M	B, C, W	D	S	P, R	DAL,IRC2,MSI,OHM, SOA
M55342^06@910#&	910	50 (char. E, H) or 100 (char. K, M)	E, H, K, M	B, C, W	G, J	S	P, R	DAL,IRC2,MSI,OHM, SOA
M55342^06@931#&	931	50 (char. E, H) or 100 (char. K, M)	E, H, K, M	B, C, W	D	S	P, R	DAL,IRC2,MSI,OHM, SOA
M55342^06@953#&	953	50 (char. E, H) or 100 (char. K, M)	E, H, K, M	B, C, W	D	S	P, R	DAL,IRC2,MSI,OHM, SOA
M55342^06@976#&	976	50 (char. E, H) or 100 (char. K, M)	E, H, K, M	B, C, W	D	S	P, R	DAL,IRC2,MSI,OHM, SOA
M55342^06@1#00&	1,000	50 (char. E, H) or 100 (char. K, M)	E, H, K, M	B, C, W	E, H, K, N	S	P, R	DAL,IRC2,MSI,OHM, SOA
M55342^06@1#02&	1,020	50 (char. E, H) or 100 (char. K, M)	E, H, K, M	B, C, W	E	S	P, R	DAL,IRC2,MSI,OHM, SOA
M55342^06@1#05&	1,050	50 (char. E, H) or 100 (char. K, M)	E, H, K, M	B, C, W	E	S	P, R	DAL,IRC2,MSI,OHM, SOA
M55342^06@1#07&	1,070	50 (char. E, H) or 100 (char. K, M)	E, H, K, M	B, C, W	E	S	P, R	DAL,IRC2,MSI,OHM, SOA
M55342^06@1#10&	1,100	50 (char. E, H) or 100 (char. K, M)	E, H, K, M	B, C, W	E, H, K	S	P, R	DAL,IRC2,MSI,OHM, SOA
M55342^06@1#13&	1,130	50 (char. E, H) or 100 (char. K, M)	E, H, K, M	B, C, W	E	S	P, R	DAL,IRC2,MSI,OHM, SOA
M55342^06@1#15&	1,150	50 (char. E, H) or 100 (char. K, M)	E, H, K, M	B, C, W	E	S	P, R	DAL,IRC2,MSI,OHM, SOA
M55342^06@1#18&	1,180	50 (char. E, H) or 100 (char. K, M)	E, H, K, M	B, C, W	E	S	P, R	DAL,IRC2,MSI,OHM, SOA
M55342^06@1#20&	1,200	50 (char. E, H) or 100 (char. K, M)	E, H, K, M	B, C, W	H, K, N	S	P, R	DAL,IRC2,MSI,OHM, SOA
M55342^06@1#21&	1,210	50 (char. E, H) or 100 (char. K, M)	E, H, K, M	B, C, W	E	S	P, R	DAL,IRC2,MSI,OHM, SOA
M55342^06@1#24&	1,240	50 (char. E, H) or 100 (char. K, M)	E, H, K, M	B, C, W	E	S	P, R	DAL,IRC2,MSI,OHM, SOA
M55342^06@1#27&	1,270	50 (char. E, H) or 100 (char. K, M)	E, H, K, M	B, C, W	E	S	P, R	DAL,IRC2,MSI,OHM, SOA
M55342^06@1#30&	1,300	50 (char. E, H) or 100 (char. K, M)	E, H, K, M	B, C, W	E, H, K	S	P, R	DAL,IRC2,MSI,OHM, SOA
M55342^06@1#33&	1,330	50 (char. E, H) or 100 (char. K, M)	E, H, K, M	B, C, W	E	S	P, R	DAL,IRC2,MSI,OHM, SOA
M55342^06@1#37&	1,370	50 (char. E, H) or 100 (char. K, M)	E, H, K, M	B, C, W	E	S	P, R	DAL,IRC2,MSI,OHM, SOA
M55342^06@1#40&	1,400	50 (char. E, H) or 100 (char. K, M)	E, H, K, M	B, C, W	E	S	P, R	DAL,IRC2,MSI,OHM, SOA
M55342^06@1#43&	1,430	50 (char. E, H) or 100 (char. K, M)	E, H, K, M	B, C, W	E	S	P, R	DAL,IRC2,MSI,OHM, SOA
M55342^06@1#47&	1,470	50 (char. E, H) or 100 (char. K, M)	E, H, K, M	B, C, W	E	S	P, R	DAL,IRC2,MSI,OHM, SOA
M55342^06@1#50&	1,500	50 (char. E, H) or 100 (char. K, M)	E, H, K, M	B, C, W	E, H, K, N	S	P, R	DAL,IRC2,MSI,OHM, SOA
M55342^06@1#54&	1,540	50 (char. E, H) or 100 (char. K, M)	E, H, K, M	B, C, W	E	S	P, R	DAL,IRC2,MSI,OHM, SOA
M55342^06@1#58&	1,580	50 (char. E, H) or 100 (char. K, M)	E, H, K, M	B, C, W	E	S	P, R	DAL,IRC2,MSI,OHM, SOA
M55342^06@1#60&	1,600	50 (char. E, H) or 100 (char. K, M)	E, H, K, M	B, C, W	H, K	S	P, R	DAL,IRC2,MSI,OHM, SOA
M55342^06@1#62&	1,620	50 (char. E, H) or 100 (char. K, M)	E, H, K, M	B, C, W	E	S	P, R	DAL,IRC2,MSI,OHM, SOA
M55342^06@1#65&	1,650	50 (char. E, H) or 100 (char. K, M)	E, H, K, M	B, C, W	E	S	P, R	DAL,IRC2,MSI,OHM, SOA
M55342^06@1#69&	1,690	50 (char. E, H) or 100 (char. K, M)	E, H, K, M	B, C, W	E	S	P, R	DAL,IRC2,MSI,OHM, SOA
M55342^06@1#74&	1,740	50 (char. E, H) or 100 (char. K, M)	E, H, K, M	B, C, W	E	S	P, R	DAL,IRC2,MSI,OHM, SOA
M55342^06@1#78&	1,780	50 (char. E, H) or 100 (char. K, M)	E, H, K, M	B, C, W	E	S	P, R	DAL,IRC2,MSI,OHM, SOA
M55342^06@1#80&	1,800	50 (char. E, H) or 100 (char. K, M)	E, H, K, M	B, C, W	H, K, N	S	P, R	DAL,IRC2,MSI,OHM, SOA

M55342^06@1#82&	1,820	50 (char. E, H) or 100 (char. K, M)	E, H, K, M	B, C, W	E	S	P, R	DAL,IRC2,MSI,OHM, SOA
M55342^06@1#87&	1,870	50 (char. E, H) or 100 (char. K, M)	E, H, K, M	B, C, W	E	S	P, R	DAL,IRC2,MSI,OHM, SOA
M55342^06@1#91&	1,910	50 (char. E, H) or 100 (char. K, M)	E, H, K, M	B, C, W	E	S	P, R	DAL,IRC2,MSI,OHM, SOA
M55342^06@1#96&	1,960	50 (char. E, H) or 100 (char. K, M)	E, H, K, M	B, C, W	E	S	P, R	DAL,IRC2,MSI,OHM, SOA
M55342^06@2#00&	2,000	50 (char. E, H) or 100 (char. K, M)	E, H, K, M	B, C, W	E, H, K, N	S	P, R	DAL,IRC2,MSI,OHM, SOA
M55342^06@2#05&	2,050	50 (char. E, H) or 100 (char. K, M)	E, H, K, M	B, C, W	E	S	P, R	DAL,IRC2,MSI,OHM, SOA
M55342^06@2#10&	2,100	50 (char. E, H) or 100 (char. K, M)	E, H, K, M	B, C, W	E	S	P, R	DAL,IRC2,MSI,OHM, SOA
M55342^06@2#15&	2,150	50 (char. E, H) or 100 (char. K, M)	E, H, K, M	B, C, W	E	S	P, R	DAL,IRC2,MSI,OHM, SOA
M55342^06@2#20&	2,200	50 (char. E, H) or 100 (char. K, M)	E, H, K, M	B, C, W	H, K, N	S	P, R	DAL,IRC2,MSI,OHM, SOA
M55342^06@2#21&	2,210	50 (char. E, H) or 100 (char. K, M)	E, H, K, M	B, C, W	E	S	P, R	DAL,IRC2,MSI,OHM, SOA
M55342^06@2#26&	2,260	50 (char. E, H) or 100 (char. K, M)	E, H, K, M	B, C, W	E	S	P, R	DAL,IRC2,MSI,OHM, SOA
M55342^06@2#32&	2,320	50 (char. E, H) or 100 (char. K, M)	E, H, K, M	B, C, W	E	S	P, R	DAL,IRC2,MSI,OHM, SOA
M55342^06@2#37&	2,370	50 (char. E, H) or 100 (char. K, M)	E, H, K, M	B, C, W	E	S	P, R	DAL,IRC2,MSI,OHM, SOA
M55342^06@2#40&	2,400	50 (char. E, H) or 100 (char. K, M)	E, H, K, M	B, C, W	H, K	S	P, R	DAL,IRC2,MSI,OHM, SOA
M55342^06@2#43&	2,430	50 (char. E, H) or 100 (char. K, M)	E, H, K, M	B, C, W	E	S	P, R	DAL,IRC2,MSI,OHM, SOA
M55342^06@2#49&	2,490	50 (char. E, H) or 100 (char. K, M)	E, H, K, M	B, C, W	E	S	P, R	DAL,IRC2,MSI,OHM, SOA
M55342^06@2#55&	2,550	50 (char. E, H) or 100 (char. K, M)	E, H, K, M	B, C, W	E	S	P, R	DAL,IRC2,MSI,OHM, SOA
M55342^06@2#61&	2,610	50 (char. E, H) or 100 (char. K, M)	E, H, K, M	B, C, W	E	S	P, R	DAL,IRC2,MSI,OHM, SOA
M55342^06@2#67&	2,670	50 (char. E, H) or 100 (char. K, M)	E, H, K, M	B, C, W	E	S	P, R	DAL,IRC2,MSI,OHM, SOA
M55342^06@2#70&	2,700	50 (char. E, H) or 100 (char. K, M)	E, H, K, M	B, C, W	H, K, N	S	P, R	DAL,IRC2,MSI,OHM, SOA
M55342^06@2#74&	2,740	50 (char. E, H) or 100 (char. K, M)	E, H, K, M	B, C, W	E	S	P, R	DAL,IRC2,MSI,OHM, SOA
M55342^06@2#80&	2,800	50 (char. E, H) or 100 (char. K, M)	E, H, K, M	B, C, W	E	S	P, R	DAL,IRC2,MSI,OHM, SOA
M55342^06@2#87&	2,870	50 (char. E, H) or 100 (char. K, M)	E, H, K, M	B, C, W	E	S	P, R	DAL,IRC2,MSI,OHM, SOA
M55342^06@2#94&	2,940	50 (char. E, H) or 100 (char. K, M)	E, H, K, M	B, C, W	E	S	P, R	DAL,IRC2,MSI,OHM, SOA
M55342^06@3#00&	3,000	50 (char. E, H) or 100 (char. K, M)	E, H, K, M	B, C, W	H, K	S	P, R	DAL,IRC2,MSI,OHM, SOA
M55342^06@3#01&	3,010	50 (char. E, H) or 100 (char. K, M)	E, H, K, M	B, C, W	E	S	P, R	DAL,IRC2,MSI,OHM, SOA
M55342^06@3#09&	3,090	50 (char. E, H) or 100 (char. K, M)	E, H, K, M	B, C, W	E	S	P, R	DAL,IRC2,MSI,OHM, SOA
M55342^06@3#16&	3,160	50 (char. E, H) or 100 (char. K, M)	E, H, K, M	B, C, W	E	S	P, R	DAL,IRC2,MSI,OHM, SOA
M55342^06@3#24&	3,240	50 (char. E, H) or 100 (char. K, M)	E, H, K, M	B, C, W	E	S	P, R	DAL,IRC2,MSI,OHM, SOA
M55342^06@3#30&	3,300	50 (char. E, H) or 100 (char. K, M)	E, H, K, M	B, C, W	H, K, N	S	P, R	DAL,IRC2,MSI,OHM, SOA
M55342^06@3#32&	3,320	50 (char. E, H) or 100 (char. K, M)	E, H, K, M	B, C, W	E	S	P, R	DAL,IRC2,MSI,OHM, SOA
M55342^06@3#40&	3,400	50 (char. E, H) or 100 (char. K, M)	E, H, K, M	B, C, W	E	S	P, R	DAL,IRC2,MSI,OHM, SOA
M55342^06@3#48&	3,480	50 (char. E, H) or 100 (char. K, M)	E, H, K, M	B, C, W	E	S	P, R	DAL,IRC2,MSI,OHM, SOA
M55342^06@3#57&	3,570	50 (char. E, H) or 100 (char. K, M)	E, H, K, M	B, C, W	E	S	P, R	DAL,IRC2,MSI,OHM, SOA
M55342^06@3#60&	3,600	50 (char. E, H) or 100 (char. K, M)	E, H, K, M	B, C, W	H, K	S	P, R	DAL,IRC2,MSI,OHM, SOA
M55342^06@3#65&	3,650	50 (char. E, H) or 100 (char. K, M)	E, H, K, M	B, C, W	E	S	P, R	DAL,IRC2,MSI,OHM, SOA
M55342^06@3#74&	3,740	50 (char. E, H) or 100 (char. K, M)	E, H, K, M	B, C, W	E	S	P, R	DAL,IRC2,MSI,OHM, SOA
M55342^06@3#83&	3,830	50 (char. E, H) or 100 (char. K, M)	E, H, K, M	B, C, W	E	S	P, R	DAL,IRC2,MSI,OHM, SOA
M55342^06@3#90&	3,900	50 (char. E, H) or 100 (char. K, M)	E, H, K, M	B, C, W	H, K, N	S	P, R	DAL,IRC2,MSI,OHM, SOA
M55342^06@3#92&	3,920	50 (char. E, H) or 100 (char. K, M)	E, H, K, M	B, C, W	E	S	P, R	DAL,IRC2,MSI,OHM, SOA
M55342^06@4#02&	4,020	50 (char. E, H) or 100 (char. K, M)	E, H, K, M	B, C, W	E	S	P, R	DAL,IRC2,MSI,OHM, SOA
M55342^06@4#12&	4,120	50 (char. E, H) or 100 (char. K, M)	E, H, K, M	B, C, W	E	S	P, R	DAL,IRC2,MSI,OHM, SOA
M55342^06@4#22&	4,220	50 (char. E, H) or 100 (char. K, M)	E, H, K, M	B, C, W	E	S	P, R	DAL,IRC2,MSI,OHM, SOA
M55342^06@4#30&	4,300	50 (char. E, H) or 100 (char. K, M)	E, H, K, M	B, C, W	H, K	S	P, R	DAL,IRC2,MSI,OHM, SOA
M55342^06@4#32&	4,320	50 (char. E, H) or 100 (char. K, M)	E, H, K, M	B, C, W	E	S	P, R	DAL,IRC2,MSI,OHM, SOA
M55342^06@4#42&	4,420	50 (char. E, H) or 100 (char. K, M)	E, H, K, M	B, C, W	E	S	P, R	DAL,IRC2,MSI,OHM, SOA
M55342^06@4#53&	4,530	50 (char. E, H) or 100 (char. K, M)	E, H, K, M	B, C, W	E	S	P, R	DAL,IRC2,MSI,OHM, SOA

M55342^06@4#64&	4,640	50 (char. E, H) or 100 (char. K, M)	E, H, K, M	B, C, W	E	S	P, R	DAL,IRC2,MSI,OHM, SOA
M55342^06@4#70&	4,700	50 (char. E, H) or 100 (char. K, M)	E, H, K, M	B, C, W	H, K, N	S	P, R	DAL,IRC2,MSI,OHM, SOA
M55342^06@4#75&	4,750	50 (char. E, H) or 100 (char. K, M)	E, H, K, M	B, C, W	E	S	P, R	DAL,IRC2,MSI,OHM, SOA
M55342^06@4#87&	4,870	50 (char. E, H) or 100 (char. K, M)	E, H, K, M	B, C, W	E	S	P, R	DAL,IRC2,MSI,OHM, SOA
M55342^06@4#99&	4,990	50 (char. E, H) or 100 (char. K, M)	E, H, K, M	B, C, W	E	S	P, R	DAL,IRC2,MSI,OHM, SOA
M55342^06@5#10&	5,100	50 (char. E, H) or 100 (char. K, M)	E, H, K, M	B, C, W	H, K	S	P, R	DAL,IRC2,MSI,OHM, SOA
M55342^06@5#11&	5,110	50 (char. E, H) or 100 (char. K, M)	E, H, K, M	B, C, W	E	S	P, R	DAL,IRC2,MSI,OHM, SOA
M55342^06@5#23&	5,230	50 (char. E, H) or 100 (char. K, M)	E, H, K, M	B, C, W	E	S	P, R	DAL,IRC2,MSI,OHM, SOA
M55342^06@5#36&	5,360	50 (char. E, H) or 100 (char. K, M)	E, H, K, M	B, C, W	E	S	P, R	DAL,IRC2,MSI,OHM, SOA
M55342^06@5#49&	5,490	50 (char. E, H) or 100 (char. K, M)	E, H, K, M	B, C, W	E	S	P, R	DAL,IRC2,MSI,OHM, SOA
M55342^06@5#60&	5,600	50 (char. E, H) or 100 (char. K, M)	E, H, K, M	B, C, W	H, K, N	S	P, R	DAL,IRC2,MSI,OHM, SOA
M55342^06@5#62&	5,620	50 (char. E, H) or 100 (char. K, M)	E, H, K, M	B, C, W	E	S	P, R	DAL,IRC2,MSI,OHM, SOA
M55342^06@5#76&	5,760	50 (char. E, H) or 100 (char. K, M)	E, H, K, M	B, C, W	E	S	P, R	DAL,IRC2,MSI,OHM, SOA
M55342^06@5#90&	5,900	50 (char. E, H) or 100 (char. K, M)	E, H, K, M	B, C, W	E	S	P, R	DAL,IRC2,MSI,OHM, SOA
M55342^06@6#04&	6,040	50 (char. E, H) or 100 (char. K, M)	E, H, K, M	B, C, W	E	S	P, R	DAL,IRC2,MSI,OHM, SOA
M55342^06@6#19&	6,190	50 (char. E, H) or 100 (char. K, M)	E, H, K, M	B, C, W	E	S	P, R	DAL,IRC2,MSI,OHM, SOA
M55342^06@6#20&	6,200	50 (char. E, H) or 100 (char. K, M)	E, H, K, M	B, C, W	H, K	S	P, R	DAL,IRC2,MSI,OHM, SOA
M55342^06@6#34&	6,340	50 (char. E, H) or 100 (char. K, M)	E, H, K, M	B, C, W	E	S	P, R	DAL,IRC2,MSI,OHM, SOA
M55342^06@6#49&	6,490	50 (char. E, H) or 100 (char. K, M)	E, H, K, M	B, C, W	E	S	P, R	DAL,IRC2,MSI,OHM, SOA
M55342^06@6#65&	6,650	50 (char. E, H) or 100 (char. K, M)	E, H, K, M	B, C, W	E	S	P, R	DAL,IRC2,MSI,OHM, SOA
M55342^06@6#80&	6,800	50 (char. E, H) or 100 (char. K, M)	E, H, K, M	B, C, W	H, K, N	S	P, R	DAL,IRC2,MSI,OHM, SOA
M55342^06@6#81&	6,810	50 (char. E, H) or 100 (char. K, M)	E, H, K, M	B, C, W	E	S	P, R	DAL,IRC2,MSI,OHM, SOA
M55342^06@6#98&	6,980	50 (char. E, H) or 100 (char. K, M)	E, H, K, M	B, C, W	E	S	P, R	DAL,IRC2,MSI,OHM, SOA
M55342^06@7#15&	7,150	50 (char. E, H) or 100 (char. K, M)	E, H, K, M	B, C, W	E	S	P, R	DAL,IRC2,MSI,OHM, SOA
M55342^06@7#32&	7,320	50 (char. E, H) or 100 (char. K, M)	E, H, K, M	B, C, W	E	S	P, R	DAL,IRC2,MSI,OHM, SOA
M55342^06@7#50&	7,500	50 (char. E, H) or 100 (char. K, M)	E, H, K, M	B, C, W	E, H, K	S	P, R	DAL,IRC2,MSI,OHM, SOA
M55342^06@7#68&	7,680	50 (char. E, H) or 100 (char. K, M)	E, H, K, M	B, C, W	E	S	P, R	DAL,IRC2,MSI,OHM, SOA
M55342^06@7#87&	7,870	50 (char. E, H) or 100 (char. K, M)	E, H, K, M	B, C, W	E	S	P, R	DAL,IRC2,MSI,OHM, SOA
M55342^06@8#06&	8,060	50 (char. E, H) or 100 (char. K, M)	E, H, K, M	B, C, W	E	S	P, R	DAL,IRC2,MSI,OHM, SOA
M55342^06@8#20&	8,200	50 (char. E, H) or 100 (char. K, M)	E, H, K, M	B, C, W	H, K, N	S	P, R	DAL,IRC2,MSI,OHM, SOA
M55342^06@8#25&	8,250	50 (char. E, H) or 100 (char. K, M)	E, H, K, M	B, C, W	E	S	P, R	DAL,IRC2,MSI,OHM, SOA
M55342^06@8#45&	8,450	50 (char. E, H) or 100 (char. K, M)	E, H, K, M	B, C, W	E	S	P, R	DAL,IRC2,MSI,OHM, SOA
M55342^06@8#66&	8,660	50 (char. E, H) or 100 (char. K, M)	E, H, K, M	B, C, W	E	S	P, R	DAL,IRC2,MSI,OHM, SOA
M55342^06@8#87&	8,870	50 (char. E, H) or 100 (char. K, M)	E, H, K, M	B, C, W	E	S	P, R	DAL,IRC2,MSI,OHM, SOA
M55342^06@9#09&	9,090	50 (char. E, H) or 100 (char. K, M)	E, H, K, M	B, C, W	E	S	P, R	DAL,IRC2,MSI,OHM, SOA
M55342^06@9#10&	9,100	50 (char. E, H) or 100 (char. K, M)	E, H, K, M	B, C, W	H, K	S	P, R	DAL,IRC2,MSI,OHM, SOA
M55342^06@9#31&	9,310	50 (char. E, H) or 100 (char. K, M)	E, H, K, M	B, C, W	E	S	P, R	DAL,IRC2,MSI,OHM, SOA
M55342^06@9#53&	9,530	50 (char. E, H) or 100 (char. K, M)	E, H, K, M	B, C, W	E	S	P, R	DAL,IRC2,MSI,OHM, SOA
M55342^06@9#76&	9,760	50 (char. E, H) or 100 (char. K, M)	E, H, K, M	B, C, W	E	S	P, R	DAL,IRC2,MSI,OHM, SOA
M55342^06@10#0&	10,000	50 (char. E, H) or 100 (char. K, M)	E, H, K, M	B, C, W	E, H, K, N	S	P, R	DAL,IRC2,MSI,OHM, SOA
M55342^06@10#2&	10,200	50 (char. E, H) or 100 (char. K, M)	E, H, K, M	B, C, W	E	S	P, R	DAL,IRC2,MSI,OHM, SOA
M55342^06@10#5&	10,500	50 (char. E, H) or 100 (char. K, M)	E, H, K, M	B, C, W	E	S	P, R	DAL,IRC2,MSI,OHM, SOA
M55342^06@10#7&	10,700	50 (char. E, H) or 100 (char. K, M)	E, H, K, M	B, C, W	E	S	P, R	DAL,IRC2,MSI,OHM, SOA
M55342^06@11#0&	11,000	50 (char. E, H) or 100 (char. K, M)	E, H, K, M	B, C, W	E, H, K	S	P, R	DAL,IRC2,MSI,OHM, SOA
M55342^06@11#3&	11,300	50 (char. E, H) or 100 (char. K, M)	E, H, K, M	B, C, W	E	S	P, R	DAL,IRC2,MSI,OHM, SOA
M55342^06@11#5&	11,500	50 (char. E, H) or 100 (char. K, M)	E, H, K, M	B, C, W	E	S	P, R	DAL,IRC2,MSI,OHM, SOA
M55342^06@11#8&	11,800	50 (char. E, H) or 100 (char. K, M)	E, H, K, M	B, C, W	E	S	P, R	DAL,IRC2,MSI,OHM, SOA

M55342^06@12#0&	12,000	50 (char. E, H) or 100 (char. K, M)	E, H, K, M	B, C, W	H, K, N	S	P, R	DAL,IRC2,MSI,OHM, SOA
M55342^06@12#1&	12,100	50 (char. E, H) or 100 (char. K, M)	E, H, K, M	B, C, W	E	S	P, R	DAL,IRC2,MSI,OHM, SOA
M55342^06@12#4&	12,400	50 (char. E, H) or 100 (char. K, M)	E, H, K, M	B, C, W	E	S	P, R	DAL,IRC2,MSI,OHM, SOA
M55342^06@12#7&	12,700	50 (char. E, H) or 100 (char. K, M)	E, H, K, M	B, C, W	E	S	P, R	DAL,IRC2,MSI,OHM, SOA
M55342^06@13#0&	13,000	50 (char. E, H) or 100 (char. K, M)	E, H, K, M	B, C, W	E, H, K	S	P, R	DAL,IRC2,MSI,OHM, SOA
M55342^06@13#3&	13,300	50 (char. E, H) or 100 (char. K, M)	E, H, K, M	B, C, W	E	S	P, R	DAL,IRC2,MSI,OHM, SOA
M55342^06@13#7&	13,700	50 (char. E, H) or 100 (char. K, M)	E, H, K, M	B, C, W	E	S	P, R	DAL,IRC2,MSI,OHM, SOA
M55342^06@14#0&	14,000	50 (char. E, H) or 100 (char. K, M)	E, H, K, M	B, C, W	E	S	P, R	DAL,IRC2,MSI,OHM, SOA
M55342^06@14#3&	14,300	50 (char. E, H) or 100 (char. K, M)	E, H, K, M	B, C, W	E	S	P, R	DAL,IRC2,MSI,OHM, SOA
M55342^06@14#7&	14,700	50 (char. E, H) or 100 (char. K, M)	E, H, K, M	B, C, W	E	S	P, R	DAL,IRC2,MSI,OHM, SOA
M55342^06@15#0&	15,000	50 (char. E, H) or 100 (char. K, M)	E, H, K, M	B, C, W	E, H, K, N	S	P, R	DAL,IRC2,MSI,OHM, SOA
M55342^06@15#4&	15,400	50 (char. E, H) or 100 (char. K, M)	E, H, K, M	B, C, W	E	S	P, R	DAL,IRC2,MSI,OHM, SOA
M55342^06@15#8&	15,800	50 (char. E, H) or 100 (char. K, M)	E, H, K, M	B, C, W	E	S	P, R	DAL,IRC2,MSI,OHM, SOA
M55342^06@16#0&	16,000	50 (char. E, H) or 100 (char. K, M)	E, H, K, M	B, C, W	H, K	S	P, R	DAL,IRC2,MSI,OHM, SOA
M55342^06@16#2&	16,200	50 (char. E, H) or 100 (char. K, M)	E, H, K, M	B, C, W	E	S	P, R	DAL,IRC2,MSI,OHM, SOA
M55342^06@16#5&	16,500	50 (char. E, H) or 100 (char. K, M)	E, H, K, M	B, C, W	E	S	P, R	DAL,IRC2,MSI,OHM, SOA
M55342^06@16#9&	16,900	50 (char. E, H) or 100 (char. K, M)	E, H, K, M	B, C, W	E	S	P, R	DAL,IRC2,MSI,OHM, SOA
M55342^06@17#4&	17,400	50 (char. E, H) or 100 (char. K, M)	E, H, K, M	B, C, W	E	S	P, R	DAL,IRC2,MSI,OHM, SOA
M55342^06@17#8&	17,800	50 (char. E, H) or 100 (char. K, M)	E, H, K, M	B, C, W	E	S	P, R	DAL,IRC2,MSI,OHM, SOA
M55342^06@18#0&	18,000	50 (char. E, H) or 100 (char. K, M)	E, H, K, M	B, C, W	H, K, N	S	P, R	DAL,IRC2,MSI,OHM, SOA
M55342^06@18#2&	18,200	50 (char. E, H) or 100 (char. K, M)	E, H, K, M	B, C, W	E	S	P, R	DAL,IRC2,MSI,OHM, SOA
M55342^06@18#7&	18,700	50 (char. E, H) or 100 (char. K, M)	E, H, K, M	B, C, W	E	S	P, R	DAL,IRC2,MSI,OHM, SOA
M55342^06@19#1&	19,100	50 (char. E, H) or 100 (char. K, M)	E, H, K, M	B, C, W	E	S	P, R	DAL,IRC2,MSI,OHM, SOA
M55342^06@19#6&	19,600	50 (char. E, H) or 100 (char. K, M)	E, H, K, M	B, C, W	E	S	P, R	DAL,IRC2,MSI,OHM, SOA
M55342^06@20#0&	20,000	50 (char. E, H) or 100 (char. K, M)	E, H, K, M	B, C, W	E, H, K, N	S	P, R	DAL,IRC2,MSI,OHM, SOA
M55342^06@20#5&	20,500	50 (char. E, H) or 100 (char. K, M)	E, H, K, M	B, C, W	E	S	P, R	DAL,IRC2,MSI,OHM, SOA
M55342^06@21#0&	21,000	50 (char. E, H) or 100 (char. K, M)	E, H, K, M	B, C, W	E	S	P, R	DAL,IRC2,MSI,OHM, SOA
M55342^06@21#5&	21,500	50 (char. E, H) or 100 (char. K, M)	E, H, K, M	B, C, W	E	S	P, R	DAL,IRC2,MSI,OHM, SOA
M55342^06@22#0&	22,000	50 (char. E, H) or 100 (char. K, M)	E, H, K, M	B, C, W	H, K, N	S	P, R	DAL,IRC2,MSI,OHM, SOA
M55342^06@22#1&	22,100	50 (char. E, H) or 100 (char. K, M)	E, H, K, M	B, C, W	E	S	P, R	DAL,IRC2,MSI,OHM, SOA
M55342^06@22#6&	22,600	50 (char. E, H) or 100 (char. K, M)	E, H, K, M	B, C, W	E	S	P, R	DAL,IRC2,MSI,OHM, SOA
M55342^06@23#2&	23,200	50 (char. E, H) or 100 (char. K, M)	E, H, K, M	B, C, W	E	S	P, R	DAL,IRC2,MSI,OHM, SOA
M55342^06@23#7&	23,700	50 (char. E, H) or 100 (char. K, M)	E, H, K, M	B, C, W	E	S	P, R	DAL,IRC2,MSI,OHM, SOA
M55342^06@24#0&	24,000	50 (char. E, H) or 100 (char. K, M)	E, H, K, M	B, C, W	H, K	S	P, R	DAL,IRC2,MSI,OHM, SOA
M55342^06@24#3&	24,300	50 (char. E, H) or 100 (char. K, M)	E, H, K, M	B, C, W	E	S	P, R	DAL,IRC2,MSI,OHM, SOA
M55342^06@24#9&	24,900	50 (char. E, H) or 100 (char. K, M)	E, H, K, M	B, C, W	E	S	P, R	DAL,IRC2,MSI,OHM, SOA
M55342^06@25#5&	25,500	50 (char. E, H) or 100 (char. K, M)	E, H, K, M	B, C, W	E	S	P, R	DAL,IRC2,MSI,OHM, SOA
M55342^06@26#1&	26,100	50 (char. E, H) or 100 (char. K, M)	E, H, K, M	B, C, W	E	S	P, R	DAL,IRC2,MSI,OHM, SOA
M55342^06@26#7&	26,700	50 (char. E, H) or 100 (char. K, M)	E, H, K, M	B, C, W	E	S	P, R	DAL,IRC2,MSI,OHM, SOA
M55342^06@27#0&	27,000	50 (char. E, H) or 100 (char. K, M)	E, H, K, M	B, C, W	H, K, N	S	P, R	DAL,IRC2,MSI,OHM, SOA
M55342^06@27#4&	27,400	50 (char. E, H) or 100 (char. K, M)	E, H, K, M	B, C, W	E	S	P, R	DAL,IRC2,MSI,OHM, SOA
M55342^06@28#0&	28,000	50 (char. E, H) or 100 (char. K, M)	E, H, K, M	B, C, W	E	S	P, R	DAL,IRC2,MSI,OHM, SOA
M55342^06@28#7&	28,700	50 (char. E, H) or 100 (char. K, M)	E, H, K, M	B, C, W	E	S	P, R	DAL,IRC2,MSI,OHM, SOA
M55342^06@29#4&	29,400	50 (char. E, H) or 100 (char. K, M)	E, H, K, M	B, C, W	E	S	P, R	DAL,IRC2,MSI,OHM, SOA
M55342^06@30#0&	30,000	50 (char. E, H) or 100 (char. K, M)	E, H, K, M	B, C, W	H, K	S	P, R	DAL,IRC2,MSI,OHM, SOA
M55342^06@30#1&	30,100	50 (char. E, H) or 100 (char. K, M)	E, H, K, M	B, C, W	E	S	P, R	DAL,IRC2,MSI,OHM, SOA
M55342^06@30#9&	30,900	50 (char. E, H) or 100 (char. K, M)	E, H, K, M	B, C, W	E	S	P, R	DAL,IRC2,MSI,OHM, SOA

M55342^06@31#6&	31,600	50 (char. E, H) or 100 (char. K, M)	E, H, K, M	B, C, W	E	S	P, R	DAL,IRC2,MSI,OHM, SOA
M55342^06@32#4&	32,400	50 (char. E, H) or 100 (char. K, M)	E, H, K, M	B, C, W	E	S	P, R	DAL,IRC2,MSI,OHM, SOA
M55342^06@33#0&	33,000	50 (char. E, H) or 100 (char. K, M)	E, H, K, M	B, C, W	H, K, N	S	P, R	DAL,IRC2,MSI,OHM, SOA
M55342^06@33#2&	33,200	50 (char. E, H) or 100 (char. K, M)	E, H, K, M	B, C, W	E	S	P, R	DAL,IRC2,MSI,OHM, SOA
M55342^06@34#0&	34,000	50 (char. E, H) or 100 (char. K, M)	E, H, K, M	B, C, W	E	S	P, R	DAL,IRC2,MSI,OHM, SOA
M55342^06@34#8&	34,800	50 (char. E, H) or 100 (char. K, M)	E, H, K, M	B, C, W	E	S	P, R	DAL,IRC2,MSI,OHM, SOA
M55342^06@35#7&	35,700	50 (char. E, H) or 100 (char. K, M)	E, H, K, M	B, C, W	E	S	P, R	DAL,IRC2,MSI,OHM, SOA
M55342^06@36#0&	36,000	50 (char. E, H) or 100 (char. K, M)	E, H, K, M	B, C, W	H, K	S	P, R	DAL,IRC2,MSI,OHM, SOA
M55342^06@36#5&	36,500	50 (char. E, H) or 100 (char. K, M)	E, H, K, M	B, C, W	E	S	P, R	DAL,IRC2,MSI,OHM, SOA
M55342^06@37#4&	37,400	50 (char. E, H) or 100 (char. K, M)	E, H, K, M	B, C, W	E	S	P, R	DAL,IRC2,MSI,OHM, SOA
M55342^06@38#3&	38,300	50 (char. E, H) or 100 (char. K, M)	E, H, K, M	B, C, W	E	S	P, R	DAL,IRC2,MSI,OHM, SOA
M55342^06@39#0&	39,000	50 (char. E, H) or 100 (char. K, M)	E, H, K, M	B, C, W	H, K, N	S	P, R	DAL,IRC2,MSI,OHM, SOA
M55342^06@39#2&	39,200	50 (char. E, H) or 100 (char. K, M)	E, H, K, M	B, C, W	E	S	P, R	DAL,IRC2,MSI,OHM, SOA
M55342^06@40#2&	40,200	50 (char. E, H) or 100 (char. K, M)	E, H, K, M	B, C, W	E	S	P, R	DAL,IRC2,MSI,OHM, SOA
M55342^06@41#2&	41,200	50 (char. E, H) or 100 (char. K, M)	E, H, K, M	B, C, W	E	S	P, R	DAL,IRC2,MSI,OHM, SOA
M55342^06@42#2&	42,200	50 (char. E, H) or 100 (char. K, M)	E, H, K, M	B, C, W	E	S	P, R	DAL,IRC2,MSI,OHM, SOA
M55342^06@43#0&	43,000	50 (char. E, H) or 100 (char. K, M)	E, H, K, M	B, C, W	H, K	S	P, R	DAL,IRC2,MSI,OHM, SOA
M55342^06@43#2&	43,200	50 (char. E, H) or 100 (char. K, M)	E, H, K, M	B, C, W	E	S	P, R	DAL,IRC2,MSI,OHM, SOA
M55342^06@44#2&	44,200	50 (char. E, H) or 100 (char. K, M)	E, H, K, M	B, C, W	E	S	P, R	DAL,IRC2,MSI,OHM, SOA
M55342^06@45#3&	45,300	50 (char. E, H) or 100 (char. K, M)	E, H, K, M	B, C, W	E	S	P, R	DAL,IRC2,MSI,OHM, SOA
M55342^06@46#4&	46,400	50 (char. E, H) or 100 (char. K, M)	E, H, K, M	B, C, W	E	S	P, R	DAL,IRC2,MSI,OHM, SOA
M55342^06@47#0&	47,000	50 (char. E, H) or 100 (char. K, M)	E, H, K, M	B, C, W	H, K, N	S	P, R	DAL,IRC2,MSI,OHM, SOA
M55342^06@47#5&	47,500	50 (char. E, H) or 100 (char. K, M)	E, H, K, M	B, C, W	E	S	P, R	DAL,IRC2,MSI,OHM, SOA
M55342^06@48#7&	48,700	50 (char. E, H) or 100 (char. K, M)	E, H, K, M	B, C, W	E	S	P, R	DAL,IRC2,MSI,OHM, SOA
M55342^06@49#9&	49,900	50 (char. E, H) or 100 (char. K, M)	E, H, K, M	B, C, W	E	S	P, R	DAL,IRC2,MSI,OHM, SOA
M55342^06@51#0&	51,000	50 (char. E, H) or 100 (char. K, M)	E, H, K, M	B, C, W	H, K	S	P, R	DAL,IRC2,MSI,OHM, SOA
M55342^06@51#1&	51,100	50 (char. E, H) or 100 (char. K, M)	E, H, K, M	B, C, W	E	S	P, R	DAL,IRC2,MSI,OHM, SOA
M55342^06@52#3&	52,300	50 (char. E, H) or 100 (char. K, M)	E, H, K, M	B, C, W	E	S	P, R	DAL,IRC2,MSI,OHM, SOA
M55342^06@53#6&	53,600	50 (char. E, H) or 100 (char. K, M)	E, H, K, M	B, C, W	E	S	P, R	DAL,IRC2,MSI,OHM, SOA
M55342^06@54#9&	54,900	50 (char. E, H) or 100 (char. K, M)	E, H, K, M	B, C, W	E	S	P, R	DAL,IRC2,MSI,OHM, SOA
M55342^06@56#0&	56,000	50 (char. E, H) or 100 (char. K, M)	E, H, K, M	B, C, W	H, K, N	S	P, R	DAL,IRC2,MSI,OHM, SOA
M55342^06@56#2&	56,200	50 (char. E, H) or 100 (char. K, M)	E, H, K, M	B, C, W	E	S	P, R	DAL,IRC2,MSI,OHM, SOA
M55342^06@57#6&	57,600	50 (char. E, H) or 100 (char. K, M)	E, H, K, M	B, C, W	E	S	P, R	DAL,IRC2,MSI,OHM, SOA
M55342^06@59#0&	59,000	50 (char. E, H) or 100 (char. K, M)	E, H, K, M	B, C, W	E	S	P, R	DAL,IRC2,MSI,OHM, SOA
M55342^06@60#4&	60,400	50 (char. E, H) or 100 (char. K, M)	E, H, K, M	B, C, W	E	S	P, R	DAL,IRC2,MSI,OHM, SOA
M55342^06@61#9&	61,900	50 (char. E, H) or 100 (char. K, M)	E, H, K, M	B, C, W	E	S	P, R	DAL,IRC2,MSI,OHM, SOA
M55342^06@62#0&	62,000	50 (char. E, H) or 100 (char. K, M)	E, H, K, M	B, C, W	H, K	S	P, R	DAL,IRC2,MSI,OHM, SOA
M55342^06@63#4&	63,400	50 (char. E, H) or 100 (char. K, M)	E, H, K, M	B, C, W	E	S	P, R	DAL,IRC2,MSI,OHM, SOA
M55342^06@64#9&	64,900	50 (char. E, H) or 100 (char. K, M)	E, H, K, M	B, C, W	E	S	P, R	DAL,IRC2,MSI,OHM, SOA
M55342^06@66#5&	66,500	50 (char. E, H) or 100 (char. K, M)	E, H, K, M	B, C, W	E	S	P, R	DAL,IRC2,MSI,OHM, SOA
M55342^06@68#0&	68,000	50 (char. E, H) or 100 (char. K, M)	E, H, K, M	B, C, W	H, K, N	S	P, R	DAL,IRC2,MSI,OHM, SOA
M55342^06@68#1&	68,100	50 (char. E, H) or 100 (char. K, M)	E, H, K, M	B, C, W	E	S	P, R	DAL,IRC2,MSI,OHM, SOA
M55342^06@69#8&	69,800	50 (char. E, H) or 100 (char. K, M)	E, H, K, M	B, C, W	E	S	P, R	DAL,IRC2,MSI,OHM, SOA
M55342^06@71#5&	71,500	50 (char. E, H) or 100 (char. K, M)	E, H, K, M	B, C, W	E	S	P, R	DAL,IRC2,MSI,OHM, SOA
M55342^06@73#2&	73,200	50 (char. E, H) or 100 (char. K, M)	E, H, K, M	B, C, W	E	S	P, R	DAL,IRC2,MSI,OHM, SOA
M55342^06@75#0&	75,000	50 (char. E, H) or 100 (char. K, M)	E, H, K, M	B, C, W	E, H, K	S	P, R	DAL,IRC2,MSI,OHM, SOA
M55342^06@76#8&	76,800	50 (char. E, H) or 100 (char. K, M)	E, H, K, M	B, C, W	E	S	P, R	DAL,IRC2,MSI,OHM, SOA

M55342^06@78#7&	78,700	50 (char. E, H) or 100 (char. K, M)	E, H, K, M	B, C, W	E	S	P, R	DAL,IRC2,MSI,OHM, SOA
M55342^06@80#6&	80,600	50 (char. E, H) or 100 (char. K, M)	E, H, K, M	B, C, W	E	S	P, R	DAL,IRC2,MSI,OHM, SOA
M55342^06@82#0&	82,000	50 (char. E, H) or 100 (char. K, M)	E, H, K, M	B, C, W	H, K, N	S	P, R	DAL,IRC2,MSI,OHM, SOA
M55342^06@82#5&	82,500	50 (char. E, H) or 100 (char. K, M)	E, H, K, M	B, C, W	E	S	P, R	DAL,IRC2,MSI,OHM, SOA
M55342^06@84#5&	84,500	50 (char. E, H) or 100 (char. K, M)	E, H, K, M	B, C, W	E	S	P, R	DAL,IRC2,MSI,OHM, SOA
M55342^06@86#6&	86,600	50 (char. E, H) or 100 (char. K, M)	E, H, K, M	B, C, W	E	S	P, R	DAL,IRC2,MSI,OHM, SOA
M55342^06@88#7&	88,700	50 (char. E, H) or 100 (char. K, M)	E, H, K, M	B, C, W	E	S	P, R	DAL,IRC2,MSI,OHM, SOA
M55342^06@90#9&	90,900	50 (char. E, H) or 100 (char. K, M)	E, H, K, M	B, C, W	E	S	P, R	DAL,IRC2,MSI,OHM, SOA
M55342^06@91#0&	91,000	50 (char. E, H) or 100 (char. K, M)	E, H, K, M	B, C, W	H, K	S	P, R	DAL,IRC2,MSI,OHM, SOA
M55342^06@93#1&	93,100	50 (char. E, H) or 100 (char. K, M)	E, H, K, M	B, C, W	E	S	P, R	DAL,IRC2,MSI,OHM, SOA
M55342^06@95#3&	95,300	50 (char. E, H) or 100 (char. K, M)	E, H, K, M	B, C, W	E	S	P, R	DAL,IRC2,MSI,OHM, SOA
M55342^06@97#6&	97,600	50 (char. E, H) or 100 (char. K, M)	E, H, K, M	B, C, W	E	S	P, R	DAL,IRC2,MSI,OHM, SOA
M55342^06@10#0&	100,000	50 (char. E, H) or 100 (char. K, M)	E, H, K, M	B, C, W	E, H, K, N	S	P, R	DAL,IRC2,MSI,OHM, SOA
M55342^06@10#2&	102,000	50 (char. E, H) or 100 (char. K, M)	E, H, K, M	B, C, W	E	S	P, R	DAL,IRC2,MSI,OHM, SOA
M55342^06@10#5&	105,000	50 (char. E, H) or 100 (char. K, M)	E, H, K, M	B, C, W	E	S	P, R	DAL,IRC2,MSI,OHM, SOA
M55342^06@10#7&	107,000	50 (char. E, H) or 100 (char. K, M)	E, H, K, M	B, C, W	E	S	P, R	DAL,IRC2,MSI,OHM, SOA
M55342^06@11#0&	110,000	50 (char. E, H) or 100 (char. K, M)	E, H, K, M	B, C, W	E, H, K	S	P, R	DAL,IRC2,MSI,OHM, SOA
M55342^06@11#3&	113,000	50 (char. E, H) or 100 (char. K, M)	E, H, K, M	B, C, W	E	S	P, R	DAL,IRC2,MSI,OHM, SOA
M55342^06@11#5&	115,000	50 (char. E, H) or 100 (char. K, M)	E, H, K, M	B, C, W	E	S	P, R	DAL,IRC2,MSI,OHM, SOA
M55342^06@11#8&	118,000	50 (char. E, H) or 100 (char. K, M)	E, H, K, M	B, C, W	E	S	P, R	DAL,IRC2,MSI,OHM, SOA
M55342^06@12#0&	120,000	50 (char. E, H) or 100 (char. K, M)	E, H, K, M	B, C, W	H, K, N	S	P, R	DAL,IRC2,MSI,OHM, SOA
M55342^06@12#1&	121,000	50 (char. E, H) or 100 (char. K, M)	E, H, K, M	B, C, W	E	S	P, R	DAL,IRC2,MSI,OHM, SOA
M55342^06@12#4&	124,000	50 (char. E, H) or 100 (char. K, M)	E, H, K, M	B, C, W	E	S	P, R	DAL,IRC2,MSI,OHM, SOA
M55342^06@12#7&	127,000	50 (char. E, H) or 100 (char. K, M)	E, H, K, M	B, C, W	E	S	P, R	DAL,MSI,OHM, SOA
M55342^06@13#0&	130,000	50 (char. E, H) or 100 (char. K, M)	E, H, K, M	B, C, W	E, H, K	S	P, R	DAL,MSI,OHM, SOA
M55342^06@13#3&	133,000	50 (char. E, H) or 100 (char. K, M)	E, H, K, M	B, C, W	E	S	P, R	DAL,MSI,OHM, SOA
M55342^06@13#7&	137,000	50 (char. E, H) or 100 (char. K, M)	E, H, K, M	B, C, W	E	S	P, R	DAL,MSI,OHM, SOA
M55342^06@14#0&	140,000	50 (char. E, H) or 100 (char. K, M)	E, H, K, M	B, C, W	E	S	P, R	DAL,MSI,OHM, SOA
M55342^06@14#3&	143,000	50 (char. E, H) or 100 (char. K, M)	E, H, K, M	B, C, W	E	S	P, R	DAL,MSI,OHM, SOA
M55342^06@14#7&	147,000	50 (char. E, H) or 100 (char. K, M)	E, H, K, M	B, C, W	E	S	P, R	DAL,MSI,OHM, SOA
M55342^06@15#0&	150,000	50 (char. E, H) or 100 (char. K, M)	E, H, K, M	B, C, W	E, H, K, N	S	P, R	DAL,MSI,OHM, SOA
M55342^06@15#4&	154,000	50 (char. E, H) or 100 (char. K, M)	E, H, K, M	B, C, W	E	S	P, R	DAL,MSI,OHM, SOA
M55342^06@15#8&	158,000	50 (char. E, H) or 100 (char. K, M)	E, H, K, M	B, C, W	E	S	P, R	DAL,MSI,OHM, SOA
M55342^06@16#0&	160,000	50 (char. E, H) or 100 (char. K, M)	E, H, K, M	B, C, W	H, K	S	P, R	DAL,MSI,OHM, SOA
M55342^06@16#2&	162,000	50 (char. E, H) or 100 (char. K, M)	E, H, K, M	B, C, W	E	S	P, R	DAL,MSI,OHM, SOA
M55342^06@16#5&	165,000	50 (char. E, H) or 100 (char. K, M)	E, H, K, M	B, C, W	E	S	P, R	DAL,MSI,OHM, SOA
M55342^06@16#9&	169,000	50 (char. E, H) or 100 (char. K, M)	E, H, K, M	B, C, W	E	S	P, R	DAL,MSI,OHM, SOA
M55342^06@17#4&	174,000	50 (char. E, H) or 100 (char. K, M)	E, H, K, M	B, C, W	E	S	P, R	DAL,MSI,OHM, SOA
M55342^06@17#8&	178,000	50 (char. E, H) or 100 (char. K, M)	E, H, K, M	B, C, W	E	S	P, R	DAL,MSI,OHM, SOA
M55342^06@18#0&	180,000	50 (char. E, H) or 100 (char. K, M)	E, H, K, M	B, C, W	H, K, N	S	P, R	DAL,MSI,OHM, SOA
M55342^06@18#2&	182,000	50 (char. E, H) or 100 (char. K, M)	E, H, K, M	B, C, W	E	S	P, R	DAL,MSI,OHM, SOA
M55342^06@18#7&	187,000	50 (char. E, H) or 100 (char. K, M)	E, H, K, M	B, C, W	E	S	P, R	DAL,MSI,OHM, SOA
M55342^06@19#1&	191,000	50 (char. E, H) or 100 (char. K, M)	E, H, K, M	B, C, W	E	S	P, R	DAL,MSI,OHM, SOA
M55342^06@19#6&	196,000	50 (char. E, H) or 100 (char. K, M)	E, H, K, M	B, C, W	E	S	P, R	DAL,MSI,OHM, SOA
M55342^06@20#0&	200,000	50 (char. E, H) or 100 (char. K, M)	E, H, K, M	B, C, W	E, H, K, N	S	P, R	DAL,MSI,OHM, SOA
M55342^06@20#5&	205,000	50 (char. E, H) or 100 (char. K, M)	E, H, K, M	B, C, W	E	S	P, R	DAL,MSI,OHM, SOA
M55342^06@21#0&	210,000	50 (char. E, H) or 100 (char. K, M)	E, H, K, M	B, C, W	E	S	P, R	DAL,MSI,OHM, SOA

M55342^06@21#5&	215,000	50 (char. E, H) or 100 (char. K, M)	E, H, K, M	B, C, W	E	S	P, R	DAL,MSI,OHM, SOA
M55342^06@22#0&	220,000	50 (char. E, H) or 100 (char. K, M)	E, H, K, M	B, C, W	H, K, N	S	P, R	DAL,MSI,OHM, SOA
M55342^06@22#1&	221,000	50 (char. E, H) or 100 (char. K, M)	E, H, K, M	B, C, W	E	S	P, R	DAL,MSI,OHM, SOA
M55342^06@22#6&	226,000	50 (char. E, H) or 100 (char. K, M)	E, H, K, M	B, C, W	E	S	P, R	DAL,MSI,OHM, SOA
M55342^06@23#2&	232,000	50 (char. E, H) or 100 (char. K, M)	E, H, K, M	B, C, W	E	S	P, R	DAL,MSI,OHM, SOA
M55342^06@23#7&	237,000	50 (char. E, H) or 100 (char. K, M)	E, H, K, M	B, C, W	E	S	P, R	DAL,MSI,OHM, SOA
M55342^06@24#0&	240,000	50 (char. E, H) or 100 (char. K, M)	E, H, K, M	B, C, W	H, K	S	P, R	DAL,MSI,OHM, SOA
M55342^06@24#3&	243,000	50 (char. E, H) or 100 (char. K, M)	E, H, K, M	B, C, W	E	S	P, R	DAL,MSI,OHM, SOA
M55342^06@24#9&	249,000	50 (char. E, H) or 100 (char. K, M)	E, H, K, M	B, C, W	E	S	P, R	DAL,MSI,OHM, SOA
M55342^06@25#5&	255,000	50 (char. E, H) or 100 (char. K, M)	E, H, K, M	B, C, W	E	S	P, R	DAL,MSI,OHM, SOA
M55342^06@26#1&	261,000	50 (char. E, H) or 100 (char. K, M)	E, H, K, M	B, C, W	E	S	P, R	DAL,MSI,OHM, SOA
M55342^06@26#7&	267,000	50 (char. E, H) or 100 (char. K, M)	E, H, K, M	B, C, W	E	S	P, R	DAL,MSI,OHM, SOA
M55342^06@27#0&	270,000	50 (char. E, H) or 100 (char. K, M)	E, H, K, M	B, C, W	H, K, N	S	P, R	DAL,MSI,OHM, SOA
M55342^06@27#4&	274,000	50 (char. E, H) or 100 (char. K, M)	E, H, K, M	B, C, W	E	S	P, R	DAL,MSI,OHM, SOA
M55342^06@28#0&	280,000	50 (char. E, H) or 100 (char. K, M)	E, H, K, M	B, C, W	E	S	P, R	DAL,MSI,OHM, SOA
M55342^06@28#7&	287,000	50 (char. E, H) or 100 (char. K, M)	E, H, K, M	B, C, W	E	S	P, R	DAL,MSI,OHM, SOA
M55342^06@29#4&	294,000	50 (char. E, H) or 100 (char. K, M)	E, H, K, M	B, C, W	E	S	P, R	DAL,MSI,OHM, SOA
M55342^06@30#0&	300,000	50 (char. E, H) or 100 (char. K, M)	E, H, K, M	B, C, W	H, K	S	P, R	DAL,MSI,OHM, SOA
M55342^06@30#1&	301,000	50 (char. E, H) or 100 (char. K, M)	E, H, K, M	B, C, W	E	S	P, R	DAL,MSI,OHM, SOA
M55342^06@30#9&	309,000	50 (char. E, H) or 100 (char. K, M)	E, H, K, M	B, C, W	E	S	P, R	DAL,MSI,OHM, SOA
M55342^06@31#6&	316,000	50 (char. E, H) or 100 (char. K, M)	E, H, K, M	B, C, W	E	S	P, R	DAL,MSI,OHM, SOA
M55342^06@32#4&	324,000	50 (char. E, H) or 100 (char. K, M)	E, H, K, M	B, C, W	E	S	P, R	DAL,MSI,OHM, SOA
M55342^06@33#0&	330,000	50 (char. E, H) or 100 (char. K, M)	E, H, K, M	B, C, W	H, K, N	S	P, R	DAL,MSI,OHM, SOA
M55342^06@33#2&	332,000	50 (char. E, H) or 100 (char. K, M)	E, H, K, M	B, C, W	E	S	P, R	DAL,MSI,OHM, SOA
M55342^06@34#0&	340,000	50 (char. E, H) or 100 (char. K, M)	E, H, K, M	B, C, W	E	S	P, R	DAL,MSI,OHM, SOA
M55342^06@34#8&	348,000	50 (char. E, H) or 100 (char. K, M)	E, H, K, M	B, C, W	E	S	P, R	DAL,MSI,OHM, SOA
M55342^06@35#7&	357,000	50 (char. E, H) or 100 (char. K, M)	E, H, K, M	B, C, W	E	S	P, R	DAL,MSI,OHM, SOA
M55342^06@36#0&	360,000	50 (char. E, H) or 100 (char. K, M)	E, H, K, M	B, C, W	H, K	S	P, R	DAL,MSI,OHM, SOA
M55342^06@36#5&	365,000	50 (char. E, H) or 100 (char. K, M)	E, H, K, M	B, C, W	E	S	P, R	DAL,MSI,OHM, SOA
M55342^06@37#4&	374,000	50 (char. E, H) or 100 (char. K, M)	E, H, K, M	B, C, W	E	S	P, R	DAL,MSI,OHM, SOA
M55342^06@38#3&	383,000	50 (char. E, H) or 100 (char. K, M)	E, H, K, M	B, C, W	E	S	P, R	DAL,MSI,OHM, SOA
M55342^06@39#0&	390,000	50 (char. E, H) or 100 (char. K, M)	E, H, K, M	B, C, W	H, K, N	S	P, R	DAL,MSI,OHM, SOA
M55342^06@39#2&	392,000	50 (char. E, H) or 100 (char. K, M)	E, H, K, M	B, C, W	E	S	P, R	DAL,MSI,OHM, SOA
M55342^06@40#2&	402,000	50 (char. E, H) or 100 (char. K, M)	E, H, K, M	B, C, W	E	S	P, R	DAL,MSI,OHM, SOA
M55342^06@41#2&	412,000	50 (char. E, H) or 100 (char. K, M)	E, H, K, M	B, C, W	E	S	P, R	DAL,MSI,OHM, SOA
M55342^06@42#2&	422,000	50 (char. E, H) or 100 (char. K, M)	E, H, K, M	B, C, W	E	S	P, R	DAL,MSI,OHM, SOA
M55342^06@43#0&	430,000	50 (char. E, H) or 100 (char. K, M)	E, H, K, M	B, C, W	H, K	S	P, R	DAL,MSI,OHM, SOA
M55342^06@43#2&	432,000	50 (char. E, H) or 100 (char. K, M)	E, H, K, M	B, C, W	E	S	P, R	DAL,MSI,OHM, SOA
M55342^06@44#2&	442,000	50 (char. E, H) or 100 (char. K, M)	E, H, K, M	B, C, W	E	S	P, R	DAL,MSI,OHM, SOA
M55342^06@45#3&	453,000	50 (char. E, H) or 100 (char. K, M)	E, H, K, M	B, C, W	E	S	P, R	DAL,MSI,OHM, SOA
M55342^06@46#4&	464,000	50 (char. E, H) or 100 (char. K, M)	E, H, K, M	B, C, W	E	S	P, R	DAL,MSI,OHM, SOA
M55342^06@47#0&	470,000	50 (char. E, H) or 100 (char. K, M)	E, H, K, M	B, C, W	H, K, N	S	P, R	DAL,MSI,OHM, SOA
M55342^06@47#5&	475,000	50 (char. E, H) or 100 (char. K, M)	E, H, K, M	B, C, W	E	S	P, R	DAL,MSI,OHM, SOA
M55342^06@48#7&	487,000	50 (char. E, H) or 100 (char. K, M)	E, H, K, M	B, C, W	E	S	P, R	DAL,MSI,OHM, SOA
M55342^06@49#9&	499,000	50 (char. E, H) or 100 (char. K, M)	E, H, K, M	B, C, W	E	S	P, R	DAL,MSI,OHM, SOA
M55342^06@51#0&	510,000	50 (char. E, H) or 100 (char. K, M)	E, H, K, M	B, C, W	H, K	S	P, R	DAL,MSI,SOA
M55342^06@51#1&	511,000	50 (char. E, H) or 100 (char. K, M)	E, H, K, M	B, C, W	E	S	P, R	DAL,MSI,SOA

M55342^06@52#3&	523,000	50 (char. E, H) or 100 (char. K, M)	E, H, K, M	B, C, W	E	S	P, R	DAL,MSI,SOA
M55342^06@53#6&	536,000	50 (char. E, H) or 100 (char. K, M)	E, H, K, M	B, C, W	E	S	P, R	DAL,MSI,SOA
M55342^06@54#9&	549,000	50 (char. E, H) or 100 (char. K, M)	E, H, K, M	B, C, W	E	S	P, R	DAL,MSI,SOA
M55342^06@56#0&	560,000	50 (char. E, H) or 100 (char. K, M)	E, H, K, M	B, C, W	H, K, N	S	P, R	DAL,MSI,SOA
M55342^06@56#2&	562,000	50 (char. E, H) or 100 (char. K, M)	E, H, K, M	B, C, W	E	S	P, R	DAL,MSI,SOA
M55342^06@57#6&	576,000	50 (char. E, H) or 100 (char. K, M)	E, H, K, M	B, C, W	E	S	P, R	DAL,MSI,SOA
M55342^06@59#0&	590,000	50 (char. E, H) or 100 (char. K, M)	E, H, K, M	B, C, W	E	S	P, R	DAL,MSI,SOA
M55342^06@60#4&	604,000	50 (char. E, H) or 100 (char. K, M)	E, H, K, M	B, C, W	E	S	P, R	DAL,MSI,SOA
M55342^06@61#9&	619,000	50 (char. E, H) or 100 (char. K, M)	E, H, K, M	B, C, W	E	S	P, R	DAL,MSI,SOA
M55342^06@62#0&	620,000	50 (char. E, H) or 100 (char. K, M)	E, H, K, M	B, C, W	H, K	S	P, R	DAL,MSI,SOA
M55342^06@63#4&	634,000	50 (char. E, H) or 100 (char. K, M)	E, H, K, M	B, C, W	E	S	P, R	DAL,MSI,SOA
M55342^06@64#9&	649,000	50 (char. E, H) or 100 (char. K, M)	E, H, K, M	B, C, W	E	S	P, R	DAL,MSI,SOA
M55342^06@66#5&	665,000	50 (char. E, H) or 100 (char. K, M)	E, H, K, M	B, C, W	E	S	P, R	DAL,MSI,SOA
M55342^06@68#0&	680,000	50 (char. E, H) or 100 (char. K, M)	E, H, K, M	B, C, W	H, K, N	S	P, R	DAL,MSI,SOA
M55342^06@68#1&	681,000	50 (char. E, H) or 100 (char. K, M)	E, H, K, M	B, C, W	E	S	P, R	DAL,MSI,SOA
M55342^06@69#8&	698,000	50 (char. E, H) or 100 (char. K, M)	E, H, K, M	B, C, W	E	S	P, R	DAL,MSI,SOA
M55342^06@71#5&	715,000	50 (char. E, H) or 100 (char. K, M)	E, H, K, M	B, C, W	E	S	P, R	DAL,MSI,SOA
M55342^06@73#2&	732,000	50 (char. E, H) or 100 (char. K, M)	E, H, K, M	B, C, W	E	S	P, R	DAL,MSI,SOA
M55342^06@75#0&	750,000	50 (char. E, H) or 100 (char. K, M)	E, H, K, M	B, C, W	E, H, K	S	P, R	DAL,MSI,SOA
M55342^06@76#8&	768,000	50 (char. E, H) or 100 (char. K, M)	E, H, K, M	B, C, W	E	S	P, R	DAL,MSI,SOA
M55342^06@78#7&	787,000	50 (char. E, H) or 100 (char. K, M)	E, H, K, M	B, C, W	E	S	P, R	DAL,MSI,SOA
M55342^06@80#6&	806,000	50 (char. E, H) or 100 (char. K, M)	E, H, K, M	B, C, W	E	S	P, R	DAL,MSI,SOA
M55342^06@82#0&	820,000	50 (char. E, H) or 100 (char. K, M)	E, H, K, M	B, C, W	H, K, N	S	P, R	DAL,MSI,SOA
M55342^06@82#5&	825,000	50 (char. E, H) or 100 (char. K, M)	E, H, K, M	B, C, W	E	S	P, R	DAL,MSI,SOA
M55342^06@84#5&	845,000	50 (char. E, H) or 100 (char. K, M)	E, H, K, M	B, C, W	E	S	P, R	DAL,MSI,SOA
M55342^06@86#6&	866,000	50 (char. E, H) or 100 (char. K, M)	E, H, K, M	B, C, W	E	S	P, R	DAL,MSI,SOA
M55342^06@88#7&	887,000	50 (char. E, H) or 100 (char. K, M)	E, H, K, M	B, C, W	E	S	P, R	DAL,MSI,SOA
M55342^06@90#9&	909,000	50 (char. E, H) or 100 (char. K, M)	E, H, K, M	B, C, W	E	S	P, R	DAL,MSI,SOA
M55342^06@91#0&	910,000	50 (char. E, H) or 100 (char. K, M)	E, H, K, M	B, C, W	H, K	S	P, R	DAL,MSI,SOA
M55342^06@93#1&	931,000	50 (char. E, H) or 100 (char. K, M)	E, H, K, M	B, C, W	E	S	P, R	DAL,MSI,SOA
M55342^06@95#3&	953,000	50 (char. E, H) or 100 (char. K, M)	E, H, K, M	B, C, W	E	S	P, R	DAL,MSI,SOA
M55342^06@97#6&	976,000	50 (char. E, H) or 100 (char. K, M)	E, H, K, M	B, C, W	E	S	P, R	DAL,MSI,SOA
M55342^06@1#00&	1,000,000	50 (char. E, H) or 100 (char. K, M)	E, H, K, M	B, C, W	E, T, L, P	S	P, R	DAL,MSI,SOA

RM0705 RESISTORS

DECADE BREAKDOWN

Click on the link below to see the associated parts selection listing:

Resistance Range
5.60 Ohms through 9.76 Ohms
10.0 Ohms through 97.6 Ohms
100 Ohms through 976 Ohms
1,000 Ohms through 9,760 Ohms
10,000 Ohms through 97,600 Ohms
100,000 Ohms through 1,000,000 Ohms

	Resistance	Power	Char.	Term.	Resistance Tol./	Level 1	Level 2	
Part Number	Value (Ohms)	Rating (mW)	(^)	Type (@)	Multiplier (#)	FRL (&)	FRL (&)	Manufacturer
M55342^06@5#60&	5.60	50 (char. E, H) or 100 (char. K, M)	E, H, K, M	B, C, W	G, J, M	S, T	P, R	DAL,MSI,SOA
M55342^06@5#62&	5.62	50 (char. E, H) or 100 (char. K, M)	E, H, K, M	B, C, W	D	S, T	P, R	DAL,MSI,SOA
M55342^06@5#76&	5.76	50 (char. E, H) or 100 (char. K, M)	E, H, K, M	B, C, W	D	S, T	P, R	DAL,MSI,SOA
M55342^06@5#90&	5.90	50 (char. E, H) or 100 (char. K, M)	E, H, K, M	B, C, W	D	S, T	P, R	DAL,MSI,SOA
M55342^06@6#04&	6.04	50 (char. E, H) or 100 (char. K, M)	E, H, K, M	B, C, W	D	S, T	P, R	DAL,MSI,SOA
M55342^06@6#19&	6.19	50 (char. E, H) or 100 (char. K, M)	E, H, K, M	B, C, W	D	S, T	P, R	DAL,MSI,SOA
M55342^06@6#20&	6.20	50 (char. E, H) or 100 (char. K, M)	E, H, K, M	B, C, W	G, J	S, T	P, R	DAL,MSI,SOA
M55342^06@6#34&	6.34	50 (char. E, H) or 100 (char. K, M)	E, H, K, M	B, C, W	D	S, T	P, R	DAL,MSI,SOA
	Resistance	Power	Char.	Term.	Resistance Tol./	Level 1	Level 2	
Part Number	Value (Ohms)	Rating (mW)	(^)	Type (@)	Multiplier (#)	FRL (&)	FRL (&)	Manufacturer
M55342^06@6#49&	6.49	50 (char. E, H) or 100 (char. K, M)	E, H, K, M	B, C, W	D	S, T	P, R	DAL,MSI,SOA
M55342^06@6#65&	6.65	50 (char. E, H) or 100 (char. K, M)	E, H, K, M	B, C, W	D	S, T	P, R	DAL,MSI,SOA
M55342^06@6#80&	6.80	50 (char. E, H) or 100 (char. K, M)	E, H, K, M	B, C, W	G, J, M	S, T	P, R	DAL,MSI,SOA
M55342^06@6#81&	6.81	50 (char. E, H) or 100 (char. K, M)	E, H, K, M	B, C, W	D	S, T	P, R	DAL,MSI,SOA
M55342^06@6#98&	6.98	50 (char. E, H) or 100 (char. K, M)	E, H, K, M	B, C, W	D	S, T	P, R	DAL,MSI,SOA
M55342^06@7#15&	7.15	50 (char. E, H) or 100 (char. K, M)	E, H, K, M	B, C, W	D	S, T	P, R	DAL,MSI,SOA
M55342^06@7#32&	7.32	50 (char. E, H) or 100 (char. K, M)	E, H, K, M	B, C, W	D	S, T	P, R	DAL,MSI,SOA
M55342^06@7#50&	7.50	50 (char. E, H) or 100 (char. K, M)	E, H, K, M	B, C, W	D, G, J	S, T	P, R	DAL,MSI,SOA
	Resistance	Power	Char.	Term.	Resistance Tol./	Level 1	Level 2	
Part Number	Value (Ohms)	Rating (mW)	(^)	Type (@)	Multiplier (#)	FRL (&)	FRL (&)	Manufacturer
M55342^06@7#68&	7.68	50 (char. E, H) or 100 (char. K, M)	E, H, K, M	B, C, W	D	S, T	P, R	DAL,MSI,SOA
M55342^06@7#87&	7.87	50 (char. E, H) or 100 (char. K, M)	E, H, K, M	B, C, W	D	S, T	P, R	DAL,MSI,SOA
M55342^06@8#06&	8.06	50 (char. E, H) or 100 (char. K, M)	E, H, K, M	B, C, W	D	S, T	P, R	DAL,MSI,SOA
M55342^06@8#20&	8.20	50 (char. E, H) or 100 (char. K, M)	E, H, K, M	B, C, W	G, J, M	S, T	P, R	DAL,MSI,SOA
M55342^06@8#25&	8.25	50 (char. E, H) or 100 (char. K, M)	E, H, K, M	B, C, W	D	S, T	P, R	DAL,MSI,SOA
M55342^06@8#45&	8.45	50 (char. E, H) or 100 (char. K, M)	E, H, K, M	B, C, W	D	S, T	P, R	DAL,MSI,SOA
M55342^06@8#66&	8.66	50 (char. E, H) or 100 (char. K, M)	E, H, K, M	B, C, W	D	S, T	P, R	DAL,MSI,SOA
M55342^06@8#87&	8.87	50 (char. E, H) or 100 (char. K, M)	E, H, K, M	B, C, W	D	S, T	P, R	DAL,MSI,SOA
M55342^06@9#09&	9.09	50 (char. E, H) or 100 (char. K, M)	E, H, K, M	B, C, W	D	S, T	P, R	DAL,MSI,SOA
	Resistance	Power	Char.	Term.	Resistance Tol./	Level 1	Level 2	
Part Number	Value (Ohms)	Rating (mW)	(^)	Type (@)	Multiplier (#)	FRL (&)	FRL (&)	Manufacturer
M55342^06@9#10&	9.10	50 (char. E, H) or 100 (char. K, M)	E, H, K, M	B, C, W	G, J	S, T	P, R	DAL,MSI,SOA
M55342^06@9#31&	9.31	50 (char. E, H) or 100 (char. K, M)	E, H, K, M	B, C, W	D	S, T	P, R	DAL,MSI,SOA
M55342^06@9#53&	9.53	50 (char. E, H) or 100 (char. K, M)	E, H, K, M	B, C, W	D	S, T	P, R	DAL,MSI,SOA
M55342^06@9#76&	9.76	50 (char. E, H) or 100 (char. K, M)	E, H, K, M	B, C, W	D	S, T	P, R	DAL,MSI,SOA
	Resistance	Power	Char.	Term.	Resistance Tol./	Level 1	Level 2	
Part Number	Value (Ohms)	Rating (mW)	(^)	Type (@)	Multiplier (#)	FRL (&)	FRL (&)	Manufacturer

	Resistance	Power	Char.	Term.	Resistance Tol./	Level 1	Level 2	
Part Number	Value (Ohms)	Rating (mW)	(^)	Type (@)	Multiplier (#)	FRL (&)	FRL (&)	Manufacturer
M55342^06@10#0&	10.0	50 (char. E, H) or 100 (char. K, M)	E, H, K, M	B, C, W	D, G, J, M	S, T	P, R	DAL,IRC2,MSI,SOA
M55342^06@10#2&	10.2	50 (char. E, H) or 100 (char. K, M)	E, H, K, M	B, C, W	D	S, T	P, R	DAL,IRC2,MSI,SOA
M55342^06@10#5&	10.5	50 (char. E, H) or 100 (char. K, M)	E, H, K, M	B, C, W	D	S, T	P, R	DAL,IRC2,MSI,SOA
M55342^06@10#7&	10.7	50 (char. E, H) or 100 (char. K, M)	E, H, K, M	B, C, W	D	S, T	P, R	DAL,IRC2,MSI,SOA
M55342^06@11#0&	11.0	50 (char. E, H) or 100 (char. K, M)	E, H, K, M	B, C, W	D, G, J	S, T	P, R	DAL,IRC2,MSI,SOA
M55342^06@11#3&	11.3	50 (char. E, H) or 100 (char. K, M)	E, H, K, M	B, C, W	D	S, T	P, R	DAL,IRC2,MSI,SOA
M55342^06@11#5&	11.5	50 (char. E, H) or 100 (char. K, M)	E, H, K, M	B, C, W	D	S, T	P, R	DAL,IRC2,MSI,SOA
M55342^06@11#8&	11.8	50 (char. E, H) or 100 (char. K, M)	E, H, K, M	B, C, W	D	S, T	P, R	DAL,IRC2,MSI,SOA
	Resistance	Power	Char.	Term.	Resistance Tol./	Level 1	Level 2	
Part Number	Value (Ohms)	Rating (mW)	(^)	Type (@)	Multiplier (#)	FRL (&)	FRL (&)	Manufacturer
M55342^06@12#0&	12.0	50 (char. E, H) or 100 (char. K, M)	E, H, K, M	B, C, W	G, J, M	S, T	P, R	DAL,IRC2,MSI,SOA
M55342^06@12#1&	12.1	50 (char. E, H) or 100 (char. K, M)	E, H, K, M	B, C, W	D	S, T	P, R	DAL,IRC2,MSI,SOA
M55342^06@12#4&	12.4	50 (char. E, H) or 100 (char. K, M)	E, H, K, M	B, C, W	D	S, T	P, R	DAL,IRC2,MSI,SOA
M55342^06@12#7&	12.7	50 (char. E, H) or 100 (char. K, M)	E, H, K, M	B, C, W	D	S, T	P, R	DAL,IRC2,MSI,SOA
M55342^06@13#0&	13.0	50 (char. E, H) or 100 (char. K, M)	E, H, K, M	B, C, W	D, G, J	S, T	P, R	DAL,IRC2,MSI,SOA
M55342^06@13#3&	13.3	50 (char. E, H) or 100 (char. K, M)	E, H, K, M	B, C, W	D	S, T	P, R	DAL,IRC2,MSI,SOA
M55342^06@13#7&	13.7	50 (char. E, H) or 100 (char. K, M)	E, H, K, M	B, C, W	D	S, T	P, R	DAL,IRC2,MSI,SOA
M55342^06@14#0&	14.0	50 (char. E, H) or 100 (char. K, M)	E, H, K, M	B, C, W	D	S, T	P, R	DAL,IRC2,MSI,SOA
	Resistance	Power	Char.	Term.	Resistance Tol./	Level 1	Level 2	
Part Number	Value (Ohms)	Rating (mW)	(^)	Type (@)	Multiplier (#)	FRL (&)	FRL (&)	Manufacturer
M55342^06@14#3&	14.3	50 (char. E, H) or 100 (char. K, M)	E, H, K, M	B, C, W	D	S, T	P, R	DAL,IRC2,MSI,SOA
M55342^06@14#7&	14.7	50 (char. E, H) or 100 (char. K, M)	E, H, K, M	B, C, W	D	S, T	P, R	DAL,IRC2,MSI,SOA
M55342^06@15#0&	15.0	50 (char. E, H) or 100 (char. K, M)	E, H, K, M	B, C, W	D, G, J, M	S, T	P, R	DAL,IRC2,MSI,SOA
M55342^06@15#4&	15.4	50 (char. E, H) or 100 (char. K, M)	E, H, K, M	B, C, W	D	S, T	P, R	DAL,IRC2,MSI,SOA
M55342^06@15#8&	15.8	50 (char. E, H) or 100 (char. K, M)	E, H, K, M	B, C, W	D	S, T	P, R	DAL,IRC2,MSI,SOA
M55342^06@16#0&	16.0	50 (char. E, H) or 100 (char. K, M)	E, H, K, M	B, C, W	G, J	S, T	P, R	DAL,IRC2,MSI,SOA
M55342^06@16#2&	16.2	50 (char. E, H) or 100 (char. K, M)	E, H, K, M	B, C, W	D	S, T	P, R	DAL,IRC2,MSI,SOA
M55342^06@16#5&	16.5	50 (char. E, H) or 100 (char. K, M)	E, H, K, M	B, C, W	D	S, T	P, R	DAL,IRC2,MSI,SOA
M55342^06@16#9&	16.9	50 (char. E, H) or 100 (char. K, M)	E, H, K, M	B, C, W	D	S, T	P, R	DAL,IRC2,MSI,SOA
	Resistance	Power	Char.	Term.	Resistance Tol./	Level 1	Level 2	
Part Number	Value (Ohms)	Rating (mW)	(^)	Type (@)	Multiplier (#)	FRL (&)	FRL (&)	Manufacturer
M55342^06@17#4&	17.4	50 (char. E, H) or 100 (char. K, M)	E, H, K, M	B, C, W	D	S, T	P, R	DAL,IRC2,MSI,SOA
M55342^06@17#8&	17.8	50 (char. E, H) or 100 (char. K, M)	E, H, K, M	B, C, W	D	S, T	P, R	DAL,IRC2,MSI,SOA
M55342^06@18#0&	18.0	50 (char. E, H) or 100 (char. K, M)	E, H, K, M	B, C, W	G, J, M	S, T	P, R	DAL,IRC2,MSI,SOA
M55342^06@18#2&	18.2	50 (char. E, H) or 100 (char. K, M)	E, H, K, M	B, C, W	D	S, T	P, R	DAL,IRC2,MSI,SOA
M55342^06@18#7&	18.7	50 (char. E, H) or 100 (char. K, M)	E, H, K, M	B, C, W	D	S, T	P, R	DAL,IRC2,MSI,SOA
M55342^06@19#1&	19.1	50 (char. E, H) or 100 (char. K, M)	E, H, K, M	B, C, W	D	S, T	P, R	DAL,IRC2,MSI,SOA
M55342^06@19#6&	19.6	50 (char. E, H) or 100 (char. K, M)	E, H, K, M	B, C, W	D	S, T	P, R	DAL,IRC2,MSI,SOA
M55342^06@20#0&	20.0	50 (char. E, H) or 100 (char. K, M)	E, H, K, M	B, C, W	D, G, J, M	S, T	P, R	DAL,IRC2,MSI,OHM, SOA
M55342^06@20#5&	20.5	50 (char. E, H) or 100 (char. K, M)	E, H, K, M	B, C, W	D	S, T	P, R	DAL,IRC2,MSI,OHM, SOA
	Resistance	Power	Char.	Term.	Resistance Tol./	Level 1	Level 2	
Part Number	Value (Ohms)	Rating (mW)	(^)	Type (@)	Multiplier (#)	FRL (&)	FRL (&)	Manufacturer
M55342^06@21#0&	21.0	50 (char. E, H) or 100 (char. K, M)	E, H, K, M	B, C, W	D	S, T	P, R	DAL,IRC2,MSI,OHM, SOA

M55342^06@21#5&	21.5	50 (char. E, H) or 100 (char. K, M)	E, H, K, M	B, C, W	D	S, T	P, R	DAL,IRC2,MSI,OHM, SOA
M55342^06@22#0&	22.0	50 (char. E, H) or 100 (char. K, M)	E, H, K, M	B, C, W	G, J, M	S, T	P, R	DAL,IRC2,MSI,OHM, SOA
M55342^06@22#1&	22.1	50 (char. E, H) or 100 (char. K, M)	E, H, K, M	B, C, W	D	S, T	P, R	DAL,IRC2,MSI,OHM, SOA
M55342^06@22#6&	22.6	50 (char. E, H) or 100 (char. K, M)	E, H, K, M	B, C, W	D	S, T	P, R	DAL,IRC2,MSI,OHM, SOA
M55342^06@23#2&	23.2	50 (char. E, H) or 100 (char. K, M)	E, H, K, M	B, C, W	D	S, T	P, R	DAL,IRC2,MSI,OHM, SOA
M55342^06@23#7&	23.7	50 (char. E, H) or 100 (char. K, M)	E, H, K, M	B, C, W	D	S, T	P, R	DAL,IRC2,MSI,OHM, SOA
M55342^06@24#0&	24.0	50 (char. E, H) or 100 (char. K, M)	E, H, K, M	B, C, W	G, J	S, T	P, R	DAL,IRC2,MSI,OHM, SOA
M55342^06@24#3&	24.3	50 (char. E, H) or 100 (char. K, M)	E, H, K, M	B, C, W	D	S, T	P, R	DAL,IRC2,MSI,OHM, SOA
	Resistance	Power	Char.	Term.	Resistance Tol./	Level 1	Level 2	
Part Number	Value (Ohms)	Rating (mW)	(^)	Type (@)	Multiplier (#)	FRL (&)	FRL (&)	Manufacturer
M55342^06@24#9&	24.9	50 (char. E, H) or 100 (char. K, M)	E, H, K, M	B, C, W	D	S, T	P, R	DAL,IRC2,MSI,OHM, SOA
M55342^06@25#5&	25.5	50 (char. E, H) or 100 (char. K, M)	E, H, K, M	B, C, W	D	S, T	P, R	DAL,IRC2,MSI,OHM, SOA
M55342^06@26#1&	26.1	50 (char. E, H) or 100 (char. K, M)	E, H, K, M	B, C, W	D	S, T	P, R	DAL,IRC2,MSI,OHM, SOA
M55342^06@26#7&	26.7	50 (char. E, H) or 100 (char. K, M)	E, H, K, M	B, C, W	D	S, T	P, R	DAL,IRC2,MSI,OHM, SOA
M55342^06@27#0&	27.0	50 (char. E, H) or 100 (char. K, M)	E, H, K, M	B, C, W	G, J, M	S, T	P, R	DAL,IRC2,MSI,OHM, SOA
M55342^06@27#4&	27.4	50 (char. E, H) or 100 (char. K, M)	E, H, K, M	B, C, W	D	S, T	P, R	DAL,IRC2,MSI,OHM, SOA
M55342^06@28#0&	28.0	50 (char. E, H) or 100 (char. K, M)	E, H, K, M	B, C, W	D	S, T	P, R	DAL,IRC2,MSI,OHM, SOA
M55342^06@28#7&	28.7	50 (char. E, H) or 100 (char. K, M)	E, H, K, M	B, C, W	D	S, T	P, R	DAL,IRC2,MSI,OHM, SOA
M55342^06@29#4&	29.4	50 (char. E, H) or 100 (char. K, M)	E, H, K, M	B, C, W	D	S, T	P, R	DAL,IRC2,MSI,OHM, SOA
	Resistance	Power	Char.	Term.	Resistance Tol./	Level 1	Level 2	
Part Number	Value (Ohms)	Rating (mW)	(^)	Type (@)	Multiplier (#)	FRL (&)	FRL (&)	Manufacturer
M55342^06@30#0&	30.0	50 (char. E, H) or 100 (char. K, M)	E, H, K, M	B, C, W	G, J	S, T	P, R	DAL,IRC2,MSI,OHM, SOA
M55342^06@30#1&	30.1	50 (char. E, H) or 100 (char. K, M)	E, H, K, M	B, C, W	D	S, T	P, R	DAL,IRC2,MSI,OHM, SOA
M55342^06@30#9&	30.9	50 (char. E, H) or 100 (char. K, M)	E, H, K, M	B, C, W	D	S, T	P, R	DAL,IRC2,MSI,OHM, SOA
M55342^06@31#6&	31.6	50 (char. E, H) or 100 (char. K, M)	E, H, K, M	B, C, W	D	S, T	P, R	DAL,IRC2,MSI,OHM, SOA
M55342^06@32#4&	32.4	50 (char. E, H) or 100 (char. K, M)	E, H, K, M	B, C, W	D	S, T	P, R	DAL,IRC2,MSI,OHM, SOA
M55342^06@33#0&	33.0	50 (char. E, H) or 100 (char. K, M)	E, H, K, M	B, C, W	G, J, M	S, T	P, R	DAL,IRC2,MSI,OHM, SOA
M55342^06@33#2&	33.2	50 (char. E, H) or 100 (char. K, M)	E, H, K, M	B, C, W	D	S, T	P, R	DAL,IRC2,MSI,OHM, SOA
M55342^06@34#0&	34.0	50 (char. E, H) or 100 (char. K, M)	E, H, K, M	B, C, W	D	S, T	P, R	DAL,IRC2,MSI,OHM, SOA
M55342^06@34#8&	34.8	50 (char. E, H) or 100 (char. K, M)	E, H, K, M	B, C, W	D	S, T	P, R	DAL,IRC2,MSI,OHM, SOA
	Resistance	Power	Char.	Term.	Resistance Tol./	Level 1	Level 2	
Part Number	Value (Ohms)	Rating (mW)	(^)	Type (@)	Multiplier (#)	FRL (&)	FRL (&)	Manufacturer
M55342^06@35#7&	35.7	50 (char. E, H) or 100 (char. K, M)	E, H, K, M	B, C, W	D	S, T	P, R	DAL,IRC2,MSI,OHM, SOA
M55342^06@36#0&	36.0	50 (char. E, H) or 100 (char. K, M)	E, H, K, M	B, C, W	G, J	S, T	P, R	DAL,IRC2,MSI,OHM, SOA
M55342^06@36#5&	36.5	50 (char. E, H) or 100 (char. K, M)	E, H, K, M	B, C, W	D	S, T	P, R	DAL,IRC2,MSI,OHM, SOA
M55342^06@37#4&	37.4	50 (char. E, H) or 100 (char. K, M)	E, H, K, M	B, C, W	D	S, T	P, R	DAL,IRC2,MSI,OHM, SOA
M55342^06@38#3&	38.3	50 (char. E, H) or 100 (char. K, M)	E, H, K, M	B, C, W	D	S, T	P, R	DAL,IRC2,MSI,OHM, SOA
M55342^06@39#0&	39.0	50 (char. E, H) or 100 (char. K, M)	E, H, K, M	B, C, W	G, J, M	S, T	P, R	DAL,IRC2,MSI,OHM, SOA
M55342^06@39#2&	39.2	50 (char. E, H) or 100 (char. K, M)	E, H, K, M	B, C, W	D	S, T	P, R	DAL,IRC2,MSI,OHM, SOA
M55342^06@40#2&	40.2	50 (char. E, H) or 100 (char. K, M)	E, H, K, M	B, C, W	D	S, T	P, R	DAL,IRC2,MSI,OHM, SOA
M55342^06@41#2&	41.2	50 (char. E, H) or 100 (char. K, M)	E, H, K, M	B, C, W	D	S, T	P, R	DAL,IRC2,MSI,OHM, SOA
	Resistance	Power	Char.	Term.	Resistance Tol./	Level 1	Level 2	
Part Number	Value (Ohms)	Rating (mW)	(^)	Type (@)	Multiplier (#)	FRL (&)	FRL (&)	Manufacturer
M55342^06@42#2&	42.2	50 (char. E, H) or 100 (char. K, M)	E, H, K, M	B, C, W	D	S, T	P, R	DAL,IRC2,MSI,OHM, SOA
M55342^06@43#0&	43.0	50 (char. E, H) or 100 (char. K, M)	E, H, K, M	B, C, W	G, J	S, T	P, R	DAL,IRC2,MSI,OHM, SOA
M55342^06@43#2&	43.2	50 (char. E, H) or 100 (char. K, M)	E, H, K, M	B, C, W	D	S, T	P, R	DAL,IRC2,MSI,OHM, SOA
M55342^06@44#2&	44.2	50 (char. E, H) or 100 (char. K, M)	E, H, K, M	B, C, W	D	S, T	P, R	DAL,IRC2,MSI,OHM, SOA

M55342^06@45#3&	45.3	50 (char. E, H) or 100 (char. K, M)	E, H, K, M	B, C, W	D	S, T	P, R	DAL,IRC2,MSI,OHM, SOA
M55342^06@46#4&	46.4	50 (char. E, H) or 100 (char. K, M)	E, H, K, M	B, C, W	D	S, T	P, R	DAL,IRC2,MSI,OHM, SOA
M55342^06@47#0&	47.0	50 (char. E, H) or 100 (char. K, M)	E, H, K, M	B, C, W	G, J, M	S, T	P, R	DAL,IRC2,MSI,OHM, SOA
M55342^06@47#5&	47.5	50 (char. E, H) or 100 (char. K, M)	E, H, K, M	B, C, W	D	S, T	P, R	DAL,IRC2,MSI,OHM, SOA
M55342^06@48#7&	48.7	50 (char. E, H) or 100 (char. K, M)	E, H, K, M	B, C, W	D	S, T	P, R	DAL,IRC2,MSI,OHM, SOA
	Resistance	Power	Char.	Term.	Resistance Tol./	Level 1	Level 2	
Part Number	Value (Ohms)	Rating (mW)	(^)	Type (@)	Multiplier (#)	FRL (&)	FRL (&)	Manufacturer
M55342^06@49#9&	49.9	50 (char. E, H) or 100 (char. K, M)	E, H, K, M	B, C, W	D	S, T	P, R	DAL,IRC2,MSI,OHM, SOA
M55342^06@51#0&	51.0	50 (char. E, H) or 100 (char. K, M)	E, H, K, M	B, C, W	G, J	S, T	P, R	DAL,IRC2,MSI,OHM, SOA
M55342^06@51#1&	51.1	50 (char. E, H) or 100 (char. K, M)	E, H, K, M	B, C, W	D	S, T	P, R	DAL,IRC2,MSI,OHM, SOA
M55342^06@52#3&	52.3	50 (char. E, H) or 100 (char. K, M)	E, H, K, M	B, C, W	D	S, T	P, R	DAL,IRC2,MSI,OHM, SOA
M55342^06@53#6&	53.6	50 (char. E, H) or 100 (char. K, M)	E, H, K, M	B, C, W	D	S, T	P, R	DAL,IRC2,MSI,OHM, SOA
M55342^06@54#9&	54.9	50 (char. E, H) or 100 (char. K, M)	E, H, K, M	B, C, W	D	S, T	P, R	DAL,IRC2,MSI,OHM, SOA
M55342^06@56#0&	56.0	50 (char. E, H) or 100 (char. K, M)	E, H, K, M	B, C, W	G, J, M	S, T	P, R	DAL,IRC2,MSI,OHM, SOA
M55342^06@56#2&	56.2	50 (char. E, H) or 100 (char. K, M)	E, H, K, M	B, C, W	D	S, T	P, R	DAL,IRC2,MSI,OHM, SOA
M55342^06@57#6&	57.6	50 (char. E, H) or 100 (char. K, M)	E, H, K, M	B, C, W	D	S, T	P, R	DAL,IRC2,MSI,OHM, SOA
	Resistance	Power	Char.	Term.	Resistance Tol./	Level 1	Level 2	
Part Number	Value (Ohms)	Rating (mW)	(^)	Type (@)	Multiplier (#)	FRL (&)	FRL (&)	Manufacturer
M55342^06@59#0&	59.0	50 (char. E, H) or 100 (char. K, M)	E, H, K, M	B, C, W	D	S, T	P, R	DAL,IRC2,MSI,OHM, SOA
M55342^06@60#4&	60.4	50 (char. E, H) or 100 (char. K, M)	E, H, K, M	B, C, W	D	S, T	P, R	DAL,IRC2,MSI,OHM, SOA
M55342^06@61#9&	61.9	50 (char. E, H) or 100 (char. K, M)	E, H, K, M	B, C, W	D	S, T	P, R	DAL,IRC2,MSI,OHM, SOA
M55342^06@62#0&	62.0	50 (char. E, H) or 100 (char. K, M)	E, H, K, M	B, C, W	G, J	S, T	P, R	DAL,IRC2,MSI,OHM, SOA
M55342^06@63#4&	63.4	50 (char. E, H) or 100 (char. K, M)	E, H, K, M	B, C, W	D	S, T	P, R	DAL,IRC2,MSI,OHM, SOA
M55342^06@64#9&	64.9	50 (char. E, H) or 100 (char. K, M)	E, H, K, M	B, C, W	D	S, T	P, R	DAL,IRC2,MSI,OHM, SOA
M55342^06@66#5&	66.5	50 (char. E, H) or 100 (char. K, M)	E, H, K, M	B, C, W	D	S, T	P, R	DAL,IRC2,MSI,OHM, SOA
M55342^06@68#0&	68.0	50 (char. E, H) or 100 (char. K, M)	E, H, K, M	B, C, W	G, J, M	S, T	P, R	DAL,IRC2,MSI,OHM, SOA
M55342^06@68#1&	68.1	50 (char. E, H) or 100 (char. K, M)	E, H, K, M	B, C, W	D	S, T	P, R	DAL,IRC2,MSI,OHM, SOA
	Resistance	Power	Char.	Term.	Resistance Tol./	Level 1	Level 2	
Part Number	Value (Ohms)	Rating (mW)	(^)	Type (@)	Multiplier (#)	FRL (&)	FRL (&)	Manufacturer
M55342^06@69#8&	69.8	50 (char. E, H) or 100 (char. K, M)	E, H, K, M	B, C, W	D	S, T	P, R	DAL,IRC2,MSI,OHM, SOA
M55342^06@71#5&	71.5	50 (char. E, H) or 100 (char. K, M)	E, H, K, M	B, C, W	D	S, T	P, R	DAL,IRC2,MSI,OHM, SOA
M55342^06@73#2&	73.2	50 (char. E, H) or 100 (char. K, M)	E, H, K, M	B, C, W	D	S, T	P, R	DAL,IRC2,MSI,OHM, SOA
M55342^06@75#0&	75.0	50 (char. E, H) or 100 (char. K, M)	E, H, K, M	B, C, W	D, G, J	S, T	P, R	DAL,IRC2,MSI,OHM, SOA
M55342^06@76#8&	76.8	50 (char. E, H) or 100 (char. K, M)	E, H, K, M	B, C, W	D	S, T	P, R	DAL,IRC2,MSI,OHM, SOA
M55342^06@78#7&	78.7	50 (char. E, H) or 100 (char. K, M)	E, H, K, M	B, C, W	D	S, T	P, R	DAL,IRC2,MSI,OHM, SOA
M55342^06@80#6&	80.6	50 (char. E, H) or 100 (char. K, M)	E, H, K, M	B, C, W	D	S, T	P, R	DAL,IRC2,MSI,OHM, SOA
M55342^06@82#0&	82.0	50 (char. E, H) or 100 (char. K, M)	E, H, K, M	B, C, W	G, J, M	S, T	P, R	DAL,IRC2,MSI,OHM, SOA
M55342^06@82#5&	82.5	50 (char. E, H) or 100 (char. K, M)	E, H, K, M	B, C, W	D	S, T	P, R	DAL,IRC2,MSI,OHM, SOA
	Resistance	Power	Char.	Term.	Resistance Tol./	Level 1	Level 2	
Part Number	Value (Ohms)	Rating (mW)	(^)	Type (@)	Multiplier (#)	FRL (&)	FRL (&)	Manufacturer
M55342^06@84#5&	84.5	50 (char. E, H) or 100 (char. K, M)	E, H, K, M	B, C, W	D	S, T	P, R	DAL,IRC2,MSI,OHM, SOA
M55342^06@86#6&	86.6	50 (char. E, H) or 100 (char. K, M)	E, H, K, M	B, C, W	D	S, T	P, R	DAL,IRC2,MSI,OHM, SOA
M55342^06@88#7&	88.7	50 (char. E, H) or 100 (char. K, M)	E, H, K, M	B, C, W	D	S, T	P, R	DAL,IRC2,MSI,OHM, SOA
M55342^06@90#9&	90.9	50 (char. E, H) or 100 (char. K, M)	E, H, K, M	B, C, W	D	S, T	P, R	DAL,IRC2,MSI,OHM, SOA
M55342^06@91#0&	91.0	50 (char. E, H) or 100 (char. K, M)	E, H, K, M	B, C, W	G, J	S, T	P, R	DAL,IRC2,MSI,OHM, SOA
M55342^06@93#1&	93.1	50 (char. E, H) or 100 (char. K, M)	E, H, K, M	B, C, W	D	S, T	P, R	DAL,IRC2,MSI,OHM, SOA
M55342^06@95#3&	95.3	50 (char. E, H) or 100 (char. K, M)	E, H, K, M	B, C, W	D	S, T	P, R	DAL,IRC2,MSI,OHM, SOA

M55342^06@97#6&	97.6	50 (char. E, H) or 100 (char. K, M)	E, H, K, M	B, C, W	D	S, T	P, R	DAL,IRC2,MSI,OHM, SOA
	Resistance	Power	Char.	Term.	Resistance Tol./	Level 1	Level 2	
Part Number	Value (Ohms)	Rating (mW)	(^)	Type (@)	Multiplier (#)	FRL (&)	FRL (&)	Manufacturer

MIL-PRF-55342/6 (RM0705) Film Chip Resistors: 100 Ohms Through 976 Ohms

	Resistance	Power	Char.	Term.	Resistance Tol./	Level 1	Level 2	
Part Number	Value (Ohms)	Rating (mW)	(^)	Type (@)	Multiplier (#)	FRL (&)	FRL (&)	Manufacturer
M55342^06@100#&	100	50 (char. E, H) or 100 (char. K, M)	E, H, K, M	B, C, W	D, G, J, M	S, T	P, R	DAL,IRC2,MSI,OHM, SOA
M55342^06@102#&	102	50 (char. E, H) or 100 (char. K, M)	E, H, K, M	B, C, W	D	S, T	P, R	DAL,IRC2,MSI,OHM, SOA
M55342^06@105#&	105	50 (char. E, H) or 100 (char. K, M)	E, H, K, M	B, C, W	D	S, T	P, R	DAL,IRC2,MSI,OHM, SOA
M55342^06@107#&	107	50 (char. E, H) or 100 (char. K, M)	E, H, K, M	B, C, W	D	S, T	P, R	DAL,IRC2,MSI,OHM, SOA
M55342^06@110#&	110	50 (char. E, H) or 100 (char. K, M)	E, H, K, M	B, C, W	D, G, J	S, T	P, R	DAL,IRC2,MSI,OHM, SOA
M55342^06@113#&	113	50 (char. E, H) or 100 (char. K, M)	E, H, K, M	B, C, W	D	S, T	P, R	DAL,IRC2,MSI,OHM, SOA
M55342^06@115#&	115	50 (char. E, H) or 100 (char. K, M)	E, H, K, M	B, C, W	D	S, T	P, R	DAL,IRC2,MSI,OHM, SOA
M55342^06@118#&	118	50 (char. E, H) or 100 (char. K, M)	E, H, K, M	B, C, W	D	S, T	P, R	DAL,IRC2,MSI,OHM, SOA
M55342^06@120#&	120	50 (char. E, H) or 100 (char. K, M)	E, H, K, M	B, C, W	G, J, M	S, T	P, R	DAL,IRC2,MSI,OHM, SOA
	Resistance	Power	Char.	Term.	Resistance Tol./	Level 1	Level 2	
Part Number	Value (Ohms)	Rating (mW)	(^)	Type (@)	Multiplier (#)	FRL (&)	FRL (&)	Manufacturer
M55342^06@121#&	121	50 (char. E, H) or 100 (char. K, M)	E, H, K, M	B, C, W	D	S, T	P, R	DAL,IRC2,MSI,OHM, SOA
M55342^06@124#&	124	50 (char. E, H) or 100 (char. K, M)	E, H, K, M	B, C, W	D	S, T	P, R	DAL,IRC2,MSI,OHM, SOA
M55342^06@127#&	127	50 (char. E, H) or 100 (char. K, M)	E, H, K, M	B, C, W	D	S, T	P, R	DAL,IRC2,MSI,OHM, SOA
M55342^06@130#&	130	50 (char. E, H) or 100 (char. K, M)	E, H, K, M	B, C, W	D, G, J	S, T	P, R	DAL,IRC2,MSI,OHM, SOA
M55342^06@133#&	133	50 (char. E, H) or 100 (char. K, M)	E, H, K, M	B, C, W	D	S, T	P, R	DAL,IRC2,MSI,OHM, SOA
M55342^06@137#&	137	50 (char. E, H) or 100 (char. K, M)	E, H, K, M	B, C, W	D	S, T	P, R	DAL,IRC2,MSI,OHM, SOA
M55342^06@140#&	140	50 (char. E, H) or 100 (char. K, M)	E, H, K, M	B, C, W	D	S, T	P, R	DAL,IRC2,MSI,OHM, SOA
M55342^06@143#&	143	50 (char. E, H) or 100 (char. K, M)	E, H, K, M	B, C, W	D	S, T	P, R	DAL,IRC2,MSI,OHM, SOA
M55342^06@147#&	147	50 (char. E, H) or 100 (char. K, M)	E, H, K, M	B, C, W	D	S, T	P, R	DAL,IRC2,MSI,OHM, SOA
	Resistance	Power	Char.	Term.	Resistance Tol./	Level 1	Level 2	
Part Number	Value (Ohms)	Rating (mW)	(^)	Type (@)	Multiplier (#)	FRL (&)	FRL (&)	Manufacturer
M55342^06@150#&	150	50 (char. E, H) or 100 (char. K, M)	E, H, K, M	B, C, W	D, G, J, M	S, T	P, R	DAL,IRC2,MSI,OHM, SOA
M55342^06@154#&	154	50 (char. E, H) or 100 (char. K, M)	E, H, K, M	B, C, W	D	S, T	P, R	DAL,IRC2,MSI,OHM, SOA
M55342^06@158#&	158	50 (char. E, H) or 100 (char. K, M)	E, H, K, M	B, C, W	D	S, T	P, R	DAL,IRC2,MSI,OHM, SOA
M55342^06@160#&	160	50 (char. E, H) or 100 (char. K, M)	E, H, K, M	B, C, W	G, J	S, T	P, R	DAL,IRC2,MSI,OHM, SOA
M55342^06@162#&	162	50 (char. E, H) or 100 (char. K, M)	E, H, K, M	B, C, W	D	S, T	P, R	DAL,IRC2,MSI,OHM, SOA
M55342^06@165#&	165	50 (char. E, H) or 100 (char. K, M)	E, H, K, M	B, C, W	D	S, T	P, R	DAL,IRC2,MSI,OHM, SOA
M55342^06@169#&	169	50 (char. E, H) or 100 (char. K, M)	E, H, K, M	B, C, W	D	S, T	P, R	DAL,IRC2,MSI,OHM, SOA
M55342^06@174#&	174	50 (char. E, H) or 100 (char. K, M)	E, H, K, M	B, C, W	D	S, T	P, R	DAL,IRC2,MSI,OHM, SOA
M55342^06@178#&	178	50 (char. E, H) or 100 (char. K, M)	E, H, K, M	B, C, W	D	S, T	P, R	DAL,IRC2,MSI,OHM, SOA
	Resistance	Power	Char.	Term.	Resistance Tol./	Level 1	Level 2	
Part Number	Value (Ohms)	Rating (mW)	(^)	Type (@)	Multiplier (#)	FRL (&)	FRL (&)	Manufacturer
M55342^06@180#&	180	50 (char. E, H) or 100 (char. K, M)	E, H, K, M	B, C, W	G, J, M	S, T	P, R	DAL,IRC2,MSI,OHM, SOA
M55342^06@182#&	182	50 (char. E, H) or 100 (char. K, M)	E, H, K, M	B, C, W	D	S, T	P, R	DAL,IRC2,MSI,OHM, SOA
M55342^06@187#&	187	50 (char. E, H) or 100 (char. K, M)	E, H, K, M	B, C, W	D	S, T	P, R	DAL,IRC2,MSI,OHM, SOA
M55342^06@191#&	191	50 (char. E, H) or 100 (char. K, M)	E, H, K, M	B, C, W	D	S, T	P, R	DAL,IRC2,MSI,OHM, SOA

M55342^06@196#&	196	50 (char. E, H) or 100 (char. K, M)	E, H, K, M	B, C, W	D	S, T	P, R	DAL,IRC2,MSI,OHM, SOA
M55342^06@200#&	200	50 (char. E, H) or 100 (char. K, M)	E, H, K, M	B, C, W	D, G, J, M	S, T	P, R	DAL,IRC2,MSI,OHM, SOA
M55342^06@205#&	205	50 (char. E, H) or 100 (char. K, M)	E, H, K, M	B, C, W	D	S, T	P, R	DAL,IRC2,MSI,OHM, SOA
M55342^06@210#&	210	50 (char. E, H) or 100 (char. K, M)	E, H, K, M	B, C, W	D	S, T	P, R	DAL,IRC2,MSI,OHM, SOA
M55342^06@215#&	215	50 (char. E, H) or 100 (char. K, M)	E, H, K, M	B, C, W	D	S, T	P, R	DAL,IRC2,MSI,OHM, SOA
	Resistance	Power	Char.	Term.	Resistance Tol./	Level 1	Level 2	
Part Number	Value (Ohms)	Rating (mW)	(^)	Type (@)	Multiplier (#)	FRL (&)	FRL (&)	Manufacturer
M55342^06@220#&	220	50 (char. E, H) or 100 (char. K, M)	E, H, K, M	B, C, W	G, J, M	S, T	P, R	DAL,IRC2,MSI,OHM, SOA
M55342^06@221#&	221	50 (char. E, H) or 100 (char. K, M)	E, H, K, M	B, C, W	D	S, T	P, R	DAL,IRC2,MSI,OHM, SOA
M55342^06@226#&	226	50 (char. E, H) or 100 (char. K, M)	E, H, K, M	B, C, W	D	S, T	P, R	DAL,IRC2,MSI,OHM, SOA
M55342^06@232#&	232	50 (char. E, H) or 100 (char. K, M)	E, H, K, M	B, C, W	D	S, T	P, R	DAL,IRC2,MSI,OHM, SOA
M55342^06@237#&	237	50 (char. E, H) or 100 (char. K, M)	E, H, K, M	B, C, W	D	S, T	P, R	DAL,IRC2,MSI,OHM, SOA
M55342^06@240#&	240	50 (char. E, H) or 100 (char. K, M)	E, H, K, M	B, C, W	G, J	S, T	P, R	DAL,IRC2,MSI,OHM, SOA
M55342^06@243#&	243	50 (char. E, H) or 100 (char. K, M)	E, H, K, M	B, C, W	D	S, T	P, R	DAL,IRC2,MSI,OHM, SOA
M55342^06@249#&	249	50 (char. E, H) or 100 (char. K, M)	E, H, K, M	B, C, W	D	S, T	P, R	DAL,IRC2,MSI,OHM, SOA
M55342^06@255#&	255	50 (char. E, H) or 100 (char. K, M)	E, H, K, M	B, C, W	D	S, T	P, R	DAL,IRC2,MSI,OHM, SOA
	Resistance	Power	Char.	Term.	Resistance Tol./	Level 1	Level 2	
Part Number	Value (Ohms)	Rating (mW)	(^)	Type (@)	Multiplier (#)	FRL (&)	FRL (&)	Manufacturer
M55342^06@261#&	261	50 (char. E, H) or 100 (char. K, M)	E, H, K, M	B, C, W	D	S, T	P, R	DAL,IRC2,MSI,OHM, SOA
M55342^06@267#&	267	50 (char. E, H) or 100 (char. K, M)	E, H, K, M	B, C, W	D	S, T	P, R	DAL,IRC2,MSI,OHM, SOA
M55342^06@270#&	270	50 (char. E, H) or 100 (char. K, M)	E, H, K, M	B, C, W	G, J, M	S, T	P, R	DAL,IRC2,MSI,OHM, SOA
M55342^06@274#&	274	50 (char. E, H) or 100 (char. K, M)	E, H, K, M	B, C, W	D	S, T	P, R	DAL,IRC2,MSI,OHM, SOA
M55342^06@280#&	280	50 (char. E, H) or 100 (char. K, M)	E, H, K, M	B, C, W	D	S, T	P, R	DAL,IRC2,MSI,OHM, SOA
M55342^06@287#&	287	50 (char. E, H) or 100 (char. K, M)	E, H, K, M	B, C, W	D	S, T	P, R	DAL,IRC2,MSI,OHM, SOA
M55342^06@294#&	294	50 (char. E, H) or 100 (char. K, M)	E, H, K, M	B, C, W	D	S, T	P, R	DAL,IRC2,MSI,OHM, SOA
M55342^06@300#&	300	50 (char. E, H) or 100 (char. K, M)	E, H, K, M	B, C, W	G, J	S, T	P, R	DAL,IRC2,MSI,OHM, SOA
M55342^06@301#&	301	50 (char. E, H) or 100 (char. K, M)	E, H, K, M	B, C, W	D	S, T	P, R	DAL,IRC2,MSI,OHM, SOA
	Resistance	Power	Char.	Term.	Resistance Tol./	Level 1	Level 2	
Part Number	Value (Ohms)	Rating (mW)	(^)	Type (@)	Multiplier (#)	FRL (&)	FRL (&)	Manufacturer
M55342^06@309#&	309	50 (char. E, H) or 100 (char. K, M)	E, H, K, M	B, C, W	D	S, T	P, R	DAL,IRC2,MSI,OHM, SOA
M55342^06@316#&	316	50 (char. E, H) or 100 (char. K, M)	E, H, K, M	B, C, W	D	S, T	P, R	DAL,IRC2,MSI,OHM, SOA
M55342^06@324#&	324	50 (char. E, H) or 100 (char. K, M)	E, H, K, M	B, C, W	D	S, T	P, R	DAL,IRC2,MSI,OHM, SOA
M55342^06@330#&	330	50 (char. E, H) or 100 (char. K, M)	E, H, K, M	B, C, W	G, J, M	S, T	P, R	DAL,IRC2,MSI,OHM, SOA
M55342^06@332#&	332	50 (char. E, H) or 100 (char. K, M)	E, H, K, M	B, C, W	D	S, T	P, R	DAL,IRC2,MSI,OHM, SOA
M55342^06@340#&	340	50 (char. E, H) or 100 (char. K, M)	E, H, K, M	B, C, W	D	S, T	P, R	DAL,IRC2,MSI,OHM, SOA
M55342^06@348#&	348	50 (char. E, H) or 100 (char. K, M)	E, H, K, M	B, C, W	D	S, T	P, R	DAL,IRC2,MSI,OHM, SOA
M55342^06@357#&	357	50 (char. E, H) or 100 (char. K, M)	E, H, K, M	B, C, W	D	S, T	P, R	DAL,IRC2,MSI,OHM, SOA
M55342^06@360#&	360	50 (char. E, H) or 100 (char. K, M)	E, H, K, M	B, C, W	G, J	S, T	P, R	DAL,IRC2,MSI,OHM, SOA
	Resistance	Power	Char.	Term.	Resistance Tol./	Level 1	Level 2	
Part Number	Value (Ohms)	Rating (mW)	(^)	Type (@)	Multiplier (#)	FRL (&)	FRL (&)	Manufacturer
M55342^06@365#&	365	50 (char. E, H) or 100 (char. K, M)	E, H, K, M	B, C, W	D	S, T	P, R	DAL,IRC2,MSI,OHM, SOA
M55342^06@374#&	374	50 (char. E, H) or 100 (char. K, M)	E, H, K, M	B, C, W	D	S, T	P, R	DAL,IRC2,MSI,OHM, SOA
M55342^06@383#&	383	50 (char. E, H) or 100 (char. K, M)	E, H, K, M	B, C, W	D	S, T	P, R	DAL,IRC2,MSI,OHM, SOA
M55342^06@390#&	390	50 (char. E, H) or 100 (char. K, M)	E, H, K, M	B, C, W	G, J, M	S, T	P, R	DAL,IRC2,MSI,OHM, SOA
M55342^06@392#&	392	50 (char. E, H) or 100 (char. K, M)	E, H, K, M	B, C, W	D	S, T	P, R	DAL,IRC2,MSI,OHM, SOA
M55342^06@402#&	402	50 (char. E, H) or 100 (char. K, M)	E, H, K, M	B, C, W	D	S, T	P, R	DAL,IRC2,MSI,OHM, SOA
M55342^06@412#&	412	50 (char. E, H) or 100 (char. K, M)	E, H, K, M	B, C, W	D	S, T	P, R	DAL,IRC2,MSI,OHM, SOA

M55342^06@422#&	422	50 (char. E, H) or 100 (char. K, M)	E, H, K, M	B, C, W	D	S, T	P, R	DAL,IRC2,MSI,OHM, SOA
M55342^06@430#&	430	50 (char. E, H) or 100 (char. K, M)	E, H, K, M	B, C, W	G, J	S, T	P, R	DAL,IRC2,MSI,OHM, SOA
	Resistance	Power	Char.	Term.	Resistance Tol./	Level 1	Level 2	
Part Number	Value (Ohms)	Rating (mW)	(^)	Type (@)	Multiplier (#)	FRL (&)	FRL (&)	Manufacturer
M55342^06@432#&	432	50 (char. E, H) or 100 (char. K, M)	E, H, K, M	B, C, W	D	S, T	P, R	DAL,IRC2,MSI,OHM, SOA
M55342^06@442#&	442	50 (char. E, H) or 100 (char. K, M)	E, H, K, M	B, C, W	D	S, T	P, R	DAL,IRC2,MSI,OHM, SOA
M55342^06@453#&	453	50 (char. E, H) or 100 (char. K, M)	E, H, K, M	B, C, W	D	S, T	P, R	DAL,IRC2,MSI,OHM, SOA
M55342^06@464#&	464	50 (char. E, H) or 100 (char. K, M)	E, H, K, M	B, C, W	D	S, T	P, R	DAL,IRC2,MSI,OHM, SOA
M55342^06@470#&	470	50 (char. E, H) or 100 (char. K, M)	E, H, K, M	B, C, W	G, J, M	S, T	P, R	DAL,IRC2,MSI,OHM, SOA
M55342^06@475#&	475	50 (char. E, H) or 100 (char. K, M)	E, H, K, M	B, C, W	D	S, T	P, R	DAL,IRC2,MSI,OHM, SOA
M55342^06@487#&	487	50 (char. E, H) or 100 (char. K, M)	E, H, K, M	B, C, W	D	S, T	P, R	DAL,IRC2,MSI,OHM, SOA
M55342^06@499#&	499	50 (char. E, H) or 100 (char. K, M)	E, H, K, M	B, C, W	D	S, T	P, R	DAL,IRC2,MSI,OHM, SOA
M55342^06@510#&	510	50 (char. E, H) or 100 (char. K, M)	E, H, K, M	B, C, W	G, J	S, T	P, R	DAL,IRC2,MSI,OHM, SOA
	Resistance	Power	Char.	Term.	Resistance Tol./	Level 1	Level 2	
Part Number	Value (Ohms)	Rating (mW)	(^)	Type (@)	Multiplier (#)	FRL (&)	FRL (&)	Manufacturer
M55342^06@511#&	511	50 (char. E, H) or 100 (char. K, M)	E, H, K, M	B, C, W	D	S, T	P, R	DAL,IRC2,MSI,OHM, SOA
M55342^06@523#&	523	50 (char. E, H) or 100 (char. K, M)	E, H, K, M	B, C, W	D	S, T	P, R	DAL,IRC2,MSI,OHM, SOA
M55342^06@536#&	536	50 (char. E, H) or 100 (char. K, M)	E, H, K, M	B, C, W	D	S, T	P, R	DAL,IRC2,MSI,OHM, SOA
M55342^06@549#&	549	50 (char. E, H) or 100 (char. K, M)	E, H, K, M	B, C, W	D	S, T	P, R	DAL,IRC2,MSI,OHM, SOA
M55342^06@560#&	560	50 (char. E, H) or 100 (char. K, M)	E, H, K, M	B, C, W	G, J, M	S, T	P, R	DAL,IRC2,MSI,OHM, SOA
M55342^06@562#&	562	50 (char. E, H) or 100 (char. K, M)	E, H, K, M	B, C, W	D	S, T	P, R	DAL,IRC2,MSI,OHM, SOA
M55342^06@576#&	576	50 (char. E, H) or 100 (char. K, M)	E, H, K, M	B, C, W	D	S, T	P, R	DAL,IRC2,MSI,OHM, SOA
M55342^06@590#&	590	50 (char. E, H) or 100 (char. K, M)	E, H, K, M	B, C, W	D	S, T	P, R	DAL,IRC2,MSI,OHM, SOA
M55342^06@604#&	604	50 (char. E, H) or 100 (char. K, M)	E, H, K, M	B, C, W	D	S, T	P, R	DAL,IRC2,MSI,OHM, SOA
	Resistance	Power	Char.	Term.	Resistance Tol./	Level 1	Level 2	
Part Number	Value (Ohms)	Rating (mW)	(^)	Type (@)	Multiplier (#)	FRL (&)	FRL (&)	Manufacturer
M55342^06@619#&	619	50 (char. E, H) or 100 (char. K, M)	E, H, K, M	B, C, W	D	S, T	P, R	DAL,IRC2,MSI,OHM, SOA
M55342^06@620#&	620	50 (char. E, H) or 100 (char. K, M)	E, H, K, M	B, C, W	G, J	S, T	P, R	DAL,IRC2,MSI,OHM, SOA
M55342^06@634#&	634	50 (char. E, H) or 100 (char. K, M)	E, H, K, M	B, C, W	D	S, T	P, R	DAL,IRC2,MSI,OHM, SOA
M55342^06@649#&	649	50 (char. E, H) or 100 (char. K, M)	E, H, K, M	B, C, W	D	S, T	P, R	DAL,IRC2,MSI,OHM, SOA
M55342^06@665#&	665	50 (char. E, H) or 100 (char. K, M)	E, H, K, M	B, C, W	D	S, T	P, R	DAL,IRC2,MSI,OHM, SOA
M55342^06@680#&	680	50 (char. E, H) or 100 (char. K, M)	E, H, K, M	B, C, W	G, J, M	S, T	P, R	DAL,IRC2,MSI,OHM, SOA
M55342^06@681#&	681	50 (char. E, H) or 100 (char. K, M)	E, H, K, M	B, C, W	D	S, T	P, R	DAL,IRC2,MSI,OHM, SOA
M55342^06@698#&	698	50 (char. E, H) or 100 (char. K, M)	E, H, K, M	B, C, W	D	S, T	P, R	DAL,IRC2,MSI,OHM, SOA
M55342^06@715#&	715	50 (char. E, H) or 100 (char. K, M)	E, H, K, M	B, C, W	D	S, T	P, R	DAL,IRC2,MSI,OHM, SOA
	Resistance	Power	Char.	Term.	Resistance Tol./	Level 1	Level 2	
Part Number	Value (Ohms)	Rating (mW)	(^)	Type (@)	Multiplier (#)	FRL (&)	FRL (&)	Manufacturer
M55342^06@732#&	732	50 (char. E, H) or 100 (char. K, M)	E, H, K, M	B, C, W	D	S, T	P, R	DAL,IRC2,MSI,OHM, SOA
M55342^06@750#&	750	50 (char. E, H) or 100 (char. K, M)	E, H, K, M	B, C, W	D, G, J	S, T	P, R	DAL,IRC2,MSI,OHM, SOA
M55342^06@768#&	768	50 (char. E, H) or 100 (char. K, M)	E, H, K, M	B, C, W	D	S, T	P, R	DAL,IRC2,MSI,OHM, SOA
M55342^06@787#&	787	50 (char. E, H) or 100 (char. K, M)	E, H, K, M	B, C, W	D	S, T	P, R	DAL,IRC2,MSI,OHM, SOA
M55342^06@806#&	806	50 (char. E, H) or 100 (char. K, M)	E, H, K, M	B, C, W	D	S, T	P, R	DAL,IRC2,MSI,OHM, SOA
M55342^06@820#&	820	50 (char. E, H) or 100 (char. K, M)	E, H, K, M	B, C, W	G, J, M	S, T	P, R	DAL,IRC2,MSI,OHM, SOA
M55342^06@825#&	825	50 (char. E, H) or 100 (char. K, M)	E, H, K, M	B, C, W	D	S, T	P, R	DAL,IRC2,MSI,OHM, SOA
M55342^06@845#&	845	50 (char. E, H) or 100 (char. K, M)	E, H, K, M	B, C, W	D	S, T	P, R	DAL,IRC2,MSI,OHM, SOA
M55342^06@866#&	866	50 (char. E, H) or 100 (char. K, M)	E, H, K, M	B, C, W	D	S, T	P, R	DAL,IRC2,MSI,OHM, SOA
	Resistance	Power	Char.	Term.	Resistance Tol./	Level 1	Level 2	

Part Number	Value (Ohms)	Rating (mW)	(^)	Type (@)	Multiplier (#)	FRL (&)	FRL (&)	Manufacturer
M55342^06@887#&	887	50 (char. E, H) or 100 (char. K, M)	E, H, K, M	B, C, W	D	S, T	P, R	DAL,IRC2,MSI,OHM, SOA
M55342^06@909#&	909	50 (char. E, H) or 100 (char. K, M)	E, H, K, M	B, C, W	D	S, T	P, R	DAL,IRC2,MSI,OHM, SOA
M55342^06@910#&	910	50 (char. E, H) or 100 (char. K, M)	E, H, K, M	B, C, W	G, J	S, T	P, R	DAL,IRC2,MSI,OHM, SOA
M55342^06@931#&	931	50 (char. E, H) or 100 (char. K, M)	E, H, K, M	B, C, W	D	S, T	P, R	DAL,IRC2,MSI,OHM, SOA
M55342^06@953#&	953	50 (char. E, H) or 100 (char. K, M)	E, H, K, M	B, C, W	D	S, T	P, R	DAL,IRC2,MSI,OHM, SOA
M55342^06@976#&	976	50 (char. E, H) or 100 (char. K, M)	E, H, K, M	B, C, W	D	S, T	P, R	DAL,IRC2,MSI,OHM, SOA
	Resistance	Power	Char.	Term.	Resistance Tol./	Level 1	Level 2	
Part Number	Value (Ohms)	Rating (mW)	(^)	Type (@)	Multiplier (#)	FRL (&)	FRL (&)	Manufacturer

MIL-PRF-55342/6 (RM0705) Film Chip Resistors: 1,000 Ohms Through 9,760 Ohms

	Resistance	Power	Char.	Term.	Resistance Tol./	Level 1	Level 2	
Part Number	Value (Ohms)	Rating (mW)	(^)	Type (@)	Multiplier (#)	FRL (&)	FRL (&)	Manufacturer
M55342^06@1#00&	1,000	50 (char. E, H) or 100 (char. K, M)	E, H, K, M	B, C, W	E, H, K, N	S, T	P, R	DAL,IRC2,MSI,OHM, SOA
M55342^06@1#02&	1,020	50 (char. E, H) or 100 (char. K, M)	E, H, K, M	B, C, W	E	S, T	P, R	DAL,IRC2,MSI,OHM, SOA
M55342^06@1#05&	1,050	50 (char. E, H) or 100 (char. K, M)	E, H, K, M	B, C, W	E	S, T	P, R	DAL,IRC2,MSI,OHM, SOA
M55342^06@1#07&	1,070	50 (char. E, H) or 100 (char. K, M)	E, H, K, M	B, C, W	E	S, T	P, R	DAL,IRC2,MSI,OHM, SOA
M55342^06@1#10&	1,100	50 (char. E, H) or 100 (char. K, M)	E, H, K, M	B, C, W	E, H, K	S, T	P, R	DAL,IRC2,MSI,OHM, SOA
M55342^06@1#13&	1,130	50 (char. E, H) or 100 (char. K, M)	E, H, K, M	B, C, W	E	S, T	P, R	DAL,IRC2,MSI,OHM, SOA
M55342^06@1#15&	1,150	50 (char. E, H) or 100 (char. K, M)	E, H, K, M	B, C, W	E	S, T	P, R	DAL,IRC2,MSI,OHM, SOA
M55342^06@1#18&	1,180	50 (char. E, H) or 100 (char. K, M)	E, H, K, M	B, C, W	E	S, T	P, R	DAL,IRC2,MSI,OHM, SOA
M55342^06@1#20&	1,200	50 (char. E, H) or 100 (char. K, M)	E, H, K, M	B, C, W	H, K, N	S, T	P, R	DAL,IRC2,MSI,OHM, SOA
	Resistance	Power	Char.	Term.	Resistance Tol./	Level 1	Level 2	
Part Number	Value (Ohms)	Rating (mW)	(^)	Type (@)	Multiplier (#)	FRL (&)	FRL (&)	Manufacturer
M55342^06@1#21&	1,210	50 (char. E, H) or 100 (char. K, M)	E, H, K, M	B, C, W	E	S, T	P, R	DAL,IRC2,MSI,OHM, SOA
M55342^06@1#24&	1,240	50 (char. E, H) or 100 (char. K, M)	E, H, K, M	B, C, W	E	S, T	P, R	DAL,IRC2,MSI,OHM, SOA
M55342^06@1#27&	1,270	50 (char. E, H) or 100 (char. K, M)	E, H, K, M	B, C, W	E	S, T	P, R	DAL,IRC2,MSI,OHM, SOA
M55342^06@1#30&	1,300	50 (char. E, H) or 100 (char. K, M)	E, H, K, M	B, C, W	E, H, K	S, T	P, R	DAL,IRC2,MSI,OHM, SOA
M55342^06@1#33&	1,330	50 (char. E, H) or 100 (char. K, M)	E, H, K, M	B, C, W	E	S, T	P, R	DAL,IRC2,MSI,OHM, SOA
M55342^06@1#37&	1,370	50 (char. E, H) or 100 (char. K, M)	E, H, K, M	B, C, W	E	S, T	P, R	DAL,IRC2,MSI,OHM, SOA
M55342^06@1#40&	1,400	50 (char. E, H) or 100 (char. K, M)	E, H, K, M	B, C, W	E	S, T	P, R	DAL,IRC2,MSI,OHM, SOA
M55342^06@1#43&	1,430	50 (char. E, H) or 100 (char. K, M)	E, H, K, M	B, C, W	E	S, T	P, R	DAL,IRC2,MSI,OHM, SOA
M55342^06@1#47&	1,470	50 (char. E, H) or 100 (char. K, M)	E, H, K, M	B, C, W	E	S, T	P, R	DAL,IRC2,MSI,OHM, SOA
	Resistance	Power	Char.	Term.	Resistance Tol./	Level 1	Level 2	
Part Number	Value (Ohms)	Rating (mW)	(^)	Type (@)	Multiplier (#)	FRL (&)	FRL (&)	Manufacturer
M55342^06@1#50&	1,500	50 (char. E, H) or 100 (char. K, M)	E, H, K, M	B, C, W	E, H, K, N	S, T	P, R	DAL,IRC2,MSI,OHM, SOA
M55342^06@1#54&	1,540	50 (char. E, H) or 100 (char. K, M)	E, H, K, M	B, C, W	E	S, T	P, R	DAL,IRC2,MSI,OHM, SOA
M55342^06@1#58&	1,580	50 (char. E, H) or 100 (char. K, M)	E, H, K, M	B, C, W	E	S, T	P, R	DAL,IRC2,MSI,OHM, SOA
M55342^06@1#60&	1,600	50 (char. E, H) or 100 (char. K, M)	E, H, K, M	B, C, W	H, K	S, T	P, R	DAL,IRC2,MSI,OHM, SOA
M55342^06@1#62&	1,620	50 (char. E, H) or 100 (char. K, M)	E, H, K, M	B, C, W	E	S, T	P, R	DAL,IRC2,MSI,OHM, SOA
M55342^06@1#65&	1,650	50 (char. E, H) or 100 (char. K, M)	E, H, K, M	B, C, W	E	S, T	P, R	DAL,IRC2,MSI,OHM, SOA
M55342^06@1#69&	1,690	50 (char. E, H) or 100 (char. K, M)	E, H, K, M	B, C, W	E	S, T	P, R	DAL,IRC2,MSI,OHM, SOA
M55342^06@1#74&	1,740	50 (char. E, H) or 100 (char. K, M)	E, H, K, M	B, C, W	E	S, T	P, R	DAL,IRC2,MSI,OHM, SOA
M55342^06@1#78&	1,780	50 (char. E, H) or 100 (char. K, M)	E, H, K, M	B, C, W	E	S, T	P, R	DAL,IRC2,MSI,OHM, SOA

	Resistance	Power	Char.	Term.	Resistance Tol./	Level 1	Level 2	
Part Number	Value (Ohms)	Rating (mW)	(^)	Type (@)	Multiplier (#)	FRL (&)	FRL (&)	Manufacturer
M55342^06@1#80&	1,800	50 (char. E, H) or 100 (char. K, M)	E, H, K, M	B, C, W	H, K, N	S, T	P, R	DAL,IRC2,MSI,OHM, SOA
M55342^06@1#82&	1,820	50 (char. E, H) or 100 (char. K, M)	E, H, K, M	B, C, W	E	S, T	P, R	DAL,IRC2,MSI,OHM, SOA
M55342^06@1#87&	1,870	50 (char. E, H) or 100 (char. K, M)	E, H, K, M	B, C, W	E	S, T	P, R	DAL,IRC2,MSI,OHM, SOA
M55342^06@1#91&	1,910	50 (char. E, H) or 100 (char. K, M)	E, H, K, M	B, C, W	E	S, T	P, R	DAL,IRC2,MSI,OHM, SOA
M55342^06@1#96&	1,960	50 (char. E, H) or 100 (char. K, M)	E, H, K, M	B, C, W	E	S, T	P, R	DAL,IRC2,MSI,OHM, SOA
M55342^06@2#00&	2,000	50 (char. E, H) or 100 (char. K, M)	E, H, K, M	B, C, W	E, H, K, N	S, T	P, R	DAL,IRC2,MSI,OHM, SOA
M55342^06@2#05&	2,050	50 (char. E, H) or 100 (char. K, M)	E, H, K, M	B, C, W	E	S, T	P, R	DAL,IRC2,MSI,OHM, SOA
M55342^06@2#10&	2,100	50 (char. E, H) or 100 (char. K, M)	E, H, K, M	B, C, W	E	S, T	P, R	DAL,IRC2,MSI,OHM, SOA
M55342^06@2#15&	2,150	50 (char. E, H) or 100 (char. K, M)	E, H, K, M	B, C, W	E	S, T	P, R	DAL,IRC2,MSI,OHM, SOA
	Resistance	Power	Char.	Term.	Resistance Tol./	Level 1	Level 2	
Part Number	Value (Ohms)	Rating (mW)	(^)	Type (@)	Multiplier (#)	FRL (&)	FRL (&)	Manufacturer
M55342^06@2#20&	2,200	50 (char. E, H) or 100 (char. K, M)	E, H, K, M	B, C, W	H, K, N	S, T	P, R	DAL,IRC2,MSI,OHM, SOA
M55342^06@2#21&	2,210	50 (char. E, H) or 100 (char. K, M)	E, H, K, M	B, C, W	E	S, T	P, R	DAL,IRC2,MSI,OHM, SOA
M55342^06@2#26&	2,260	50 (char. E, H) or 100 (char. K, M)	E, H, K, M	B, C, W	E	S, T	P, R	DAL,IRC2,MSI,OHM, SOA
M55342^06@2#32&	2,320	50 (char. E, H) or 100 (char. K, M)	E, H, K, M	B, C, W	E	S, T	P, R	DAL,IRC2,MSI,OHM, SOA
M55342^06@2#37&	2,370	50 (char. E, H) or 100 (char. K, M)	E, H, K, M	B, C, W	E	S, T	P, R	DAL,IRC2,MSI,OHM, SOA
M55342^06@2#40&	2,400	50 (char. E, H) or 100 (char. K, M)	E, H, K, M	B, C, W	H, K	S, T	P, R	DAL,IRC2,MSI,OHM, SOA
M55342^06@2#43&	2,430	50 (char. E, H) or 100 (char. K, M)	E, H, K, M	B, C, W	E	S, T	P, R	DAL,IRC2,MSI,OHM, SOA
M55342^06@2#49&	2,490	50 (char. E, H) or 100 (char. K, M)	E, H, K, M	B, C, W	E	S, T	P, R	DAL,IRC2,MSI,OHM, SOA
M55342^06@2#55&	2,550	50 (char. E, H) or 100 (char. K, M)	E, H, K, M	B, C, W	E	S, T	P, R	DAL,IRC2,MSI,OHM, SOA
	Resistance	Power	Char.	Term.	Resistance Tol./	Level 1	Level 2	
Part Number	Value (Ohms)	Rating (mW)	(^)	Type (@)	Multiplier (#)	FRL (&)	FRL (&)	Manufacturer
M55342^06@2#61&	2,610	50 (char. E, H) or 100 (char. K, M)	E, H, K, M	B, C, W	E	S, T	P, R	DAL,IRC2,MSI,OHM, SOA
M55342^06@2#67&	2,670	50 (char. E, H) or 100 (char. K, M)	E, H, K, M	B, C, W	E	S, T	P, R	DAL,IRC2,MSI,OHM, SOA
M55342^06@2#70&	2,700	50 (char. E, H) or 100 (char. K, M)	E, H, K, M	B, C, W	H, K, N	S, T	P, R	DAL,IRC2,MSI,OHM, SOA
M55342^06@2#74&	2,740	50 (char. E, H) or 100 (char. K, M)	E, H, K, M	B, C, W	E	S, T	P, R	DAL,IRC2,MSI,OHM, SOA
M55342^06@2#80&	2,800	50 (char. E, H) or 100 (char. K, M)	E, H, K, M	B, C, W	E	S, T	P, R	DAL,IRC2,MSI,OHM, SOA
M55342^06@2#87&	2,870	50 (char. E, H) or 100 (char. K, M)	E, H, K, M	B, C, W	E	S, T	P, R	DAL,IRC2,MSI,OHM, SOA
M55342^06@2#94&	2,940	50 (char. E, H) or 100 (char. K, M)	E, H, K, M	B, C, W	E	S, T	P, R	DAL,IRC2,MSI,OHM, SOA
M55342^06@3#00&	3,000	50 (char. E, H) or 100 (char. K, M)	E, H, K, M	B, C, W	H, K	S, T	P, R	DAL,IRC2,MSI,OHM, SOA
M55342^06@3#01&	3,010	50 (char. E, H) or 100 (char. K, M)	E, H, K, M	B, C, W	E	S, T	P, R	DAL,IRC2,MSI,OHM, SOA
	Resistance	Power	Char.	Term.	Resistance Tol./	Level 1	Level 2	
Part Number	Value (Ohms)	Rating (mW)	(^)	Type (@)	Multiplier (#)	FRL (&)	FRL (&)	Manufacturer
M55342^06@3#09&	3,090	50 (char. E, H) or 100 (char. K, M)	E, H, K, M	B, C, W	E	S, T	P, R	DAL,IRC2,MSI,OHM, SOA
M55342^06@3#16&	3,160	50 (char. E, H) or 100 (char. K, M)	E, H, K, M	B, C, W	E	S, T	P, R	DAL,IRC2,MSI,OHM, SOA
M55342^06@3#24&	3,240	50 (char. E, H) or 100 (char. K, M)	E, H, K, M	B, C, W	E	S, T	P, R	DAL,IRC2,MSI,OHM, SOA
M55342^06@3#30&	3,300	50 (char. E, H) or 100 (char. K, M)	E, H, K, M	B, C, W	H, K, N	S, T	P, R	DAL,IRC2,MSI,OHM, SOA
M55342^06@3#32&	3,320	50 (char. E, H) or 100 (char. K, M)	E, H, K, M	B, C, W	E	S, T	P, R	DAL,IRC2,MSI,OHM, SOA
M55342^06@3#40&	3,400	50 (char. E, H) or 100 (char. K, M)	E, H, K, M	B, C, W	E	S, T	P, R	DAL,IRC2,MSI,OHM, SOA
M55342^06@3#48&	3,480	50 (char. E, H) or 100 (char. K, M)	E, H, K, M	B, C, W	E	S, T	P, R	DAL,IRC2,MSI,OHM, SOA
M55342^06@3#57&	3,570	50 (char. E, H) or 100 (char. K, M)	E, H, K, M	B, C, W	E	S, T	P, R	DAL,IRC2,MSI,OHM, SOA
M55342^06@3#60&	3,600	50 (char. E, H) or 100 (char. K, M)	E, H, K, M	B, C, W	H, K	S, T	P, R	DAL,IRC2,MSI,OHM, SOA
	Resistance	Power	Char.	Term.	Resistance Tol./	Level 1	Level 2	
Part Number	Value (Ohms)	Rating (mW)	(^)	Type (@)	Multiplier (#)	FRL (&)	FRL (&)	Manufacturer
M55342^06@3#65&	3,650	50 (char. E, H) or 100 (char. K, M)	E, H, K, M	B, C, W	E	S, T	P, R	DAL,IRC2,MSI,OHM, SOA

M55342^06@3#74&	3,740	50 (char. E, H) or 100 (char. K, M)	E, H, K, M	B, C, W	E	S, T	P, R	DAL,IRC2,MSI,OHM, SOA
M55342^06@3#83&	3,830	50 (char. E, H) or 100 (char. K, M)	E, H, K, M	B, C, W	E	S, T	P, R	DAL,IRC2,MSI,OHM, SOA
M55342^06@3#90&	3,900	50 (char. E, H) or 100 (char. K, M)	E, H, K, M	B, C, W	H, K, N	S, T	P, R	DAL,IRC2,MSI,OHM, SOA
M55342^06@3#92&	3,920	50 (char. E, H) or 100 (char. K, M)	E, H, K, M	B, C, W	E	S, T	P, R	DAL,IRC2,MSI,OHM, SOA
M55342^06@4#02&	4,020	50 (char. E, H) or 100 (char. K, M)	E, H, K, M	B, C, W	E	S, T	P, R	DAL,IRC2,MSI,OHM, SOA
M55342^06@4#12&	4,120	50 (char. E, H) or 100 (char. K, M)	E, H, K, M	B, C, W	E	S, T	P, R	DAL,IRC2,MSI,OHM, SOA
M55342^06@4#22&	4,220	50 (char. E, H) or 100 (char. K, M)	E, H, K, M	B, C, W	E	S, T	P, R	DAL,IRC2,MSI,OHM, SOA
M55342^06@4#30&	4,300	50 (char. E, H) or 100 (char. K, M)	E, H, K, M	B, C, W	H, K	S, T	P, R	DAL,IRC2,MSI,OHM, SOA
	Resistance	Power	Char.	Term.	Resistance Tol./	Level 1	Level 2	
Part Number	Value (Ohms)	Rating (mW)	(^)	Type (@)	Multiplier (#)	FRL (&)	FRL (&)	Manufacturer
M55342^06@4#32&	4,320	50 (char. E, H) or 100 (char. K, M)	E, H, K, M	B, C, W	E	S, T	P, R	DAL,IRC2,MSI,OHM, SOA
M55342^06@4#42&	4,420	50 (char. E, H) or 100 (char. K, M)	E, H, K, M	B, C, W	E	S, T	P, R	DAL,IRC2,MSI,OHM, SOA
M55342^06@4#53&	4,530	50 (char. E, H) or 100 (char. K, M)	E, H, K, M	B, C, W	E	S, T	P, R	DAL,IRC2,MSI,OHM, SOA
M55342^06@4#64&	4,640	50 (char. E, H) or 100 (char. K, M)	E, H, K, M	B, C, W	E	S, T	P, R	DAL,IRC2,MSI,OHM, SOA
M55342^06@4#70&	4,700	50 (char. E, H) or 100 (char. K, M)	E, H, K, M	B, C, W	H, K, N	S, T	P, R	DAL,IRC2,MSI,OHM, SOA
M55342^06@4#75&	4,750	50 (char. E, H) or 100 (char. K, M)	E, H, K, M	B, C, W	E	S, T	P, R	DAL,IRC2,MSI,OHM, SOA
M55342^06@4#87&	4,870	50 (char. E, H) or 100 (char. K, M)	E, H, K, M	B, C, W	E	S, T	P, R	DAL,IRC2,MSI,OHM, SOA
M55342^06@4#99&	4,990	50 (char. E, H) or 100 (char. K, M)	E, H, K, M	B, C, W	E	S, T	P, R	DAL,IRC2,MSI,OHM, SOA
M55342^06@5#10&	5,100	50 (char. E, H) or 100 (char. K, M)	E, H, K, M	B, C, W	H, K	S, T	P, R	DAL,IRC2,MSI,OHM, SOA
	Resistance	Power	Char.	Term.	Resistance Tol./	Level 1	Level 2	
Part Number	Value (Ohms)	Rating (mW)	(^)	Type (@)	Multiplier (#)	FRL (&)	FRL (&)	Manufacturer
M55342^06@5#11&	5,110	50 (char. E, H) or 100 (char. K, M)	E, H, K, M	B, C, W	E	S, T	P, R	DAL,IRC2,MSI,OHM, SOA
M55342^06@5#23&	5,230	50 (char. E, H) or 100 (char. K, M)	E, H, K, M	B, C, W	E	S, T	P, R	DAL,IRC2,MSI,OHM, SOA
M55342^06@5#36&	5,360	50 (char. E, H) or 100 (char. K, M)	E, H, K, M	B, C, W	E	S, T	P, R	DAL,IRC2,MSI,OHM, SOA
M55342^06@5#49&	5,490	50 (char. E, H) or 100 (char. K, M)	E, H, K, M	B, C, W	E	S, T	P, R	DAL,IRC2,MSI,OHM, SOA
M55342^06@5#60&	5,600	50 (char. E, H) or 100 (char. K, M)	E, H, K, M	B, C, W	H, K, N	S, T	P, R	DAL,IRC2,MSI,OHM, SOA
M55342^06@5#62&	5,620	50 (char. E, H) or 100 (char. K, M)	E, H, K, M	B, C, W	E	S, T	P, R	DAL,IRC2,MSI,OHM, SOA
M55342^06@5#76&	5,760	50 (char. E, H) or 100 (char. K, M)	E, H, K, M	B, C, W	E	S, T	P, R	DAL,IRC2,MSI,OHM, SOA
M55342^06@5#90&	5,900	50 (char. E, H) or 100 (char. K, M)	E, H, K, M	B, C, W	E	S, T	P, R	DAL,IRC2,MSI,OHM, SOA
M55342^06@6#04&	6,040	50 (char. E, H) or 100 (char. K, M)	E, H, K, M	B, C, W	E	S, T	P, R	DAL,IRC2,MSI,OHM, SOA
	Resistance	Power	Char.	Term.	Resistance Tol./	Level 1	Level 2	
Part Number	Value (Ohms)	Rating (mW)	(^)	Type (@)	Multiplier (#)	FRL (&)	FRL (&)	Manufacturer
M55342^06@6#19&	6,190	50 (char. E, H) or 100 (char. K, M)	E, H, K, M	B, C, W	E	S, T	P, R	DAL,IRC2,MSI,OHM, SOA
M55342^06@6#20&	6,200	50 (char. E, H) or 100 (char. K, M)	E, H, K, M	B, C, W	H, K	S, T	P, R	DAL,IRC2,MSI,OHM, SOA
M55342^06@6#34&	6,340	50 (char. E, H) or 100 (char. K, M)	E, H, K, M	B, C, W	E	S, T	P, R	DAL,IRC2,MSI,OHM, SOA
M55342^06@6#49&	6,490	50 (char. E, H) or 100 (char. K, M)	E, H, K, M	B, C, W	E	S, T	P, R	DAL,IRC2,MSI,OHM, SOA
M55342^06@6#65&	6,650	50 (char. E, H) or 100 (char. K, M)	E, H, K, M	B, C, W	E	S, T	P, R	DAL,IRC2,MSI,OHM, SOA
M55342^06@6#80&	6,800	50 (char. E, H) or 100 (char. K, M)	E, H, K, M	B, C, W	H, K, N	S, T	P, R	DAL,IRC2,MSI,OHM, SOA
M55342^06@6#81&	6,810	50 (char. E, H) or 100 (char. K, M)	E, H, K, M	B, C, W	E	S, T	P, R	DAL,IRC2,MSI,OHM, SOA
M55342^06@6#98&	6,980	50 (char. E, H) or 100 (char. K, M)	E, H, K, M	B, C, W	E	S, T	P, R	DAL,IRC2,MSI,OHM, SOA
M55342^06@7#15&	7,150	50 (char. E, H) or 100 (char. K, M)	E, H, K, M	B, C, W	E	S, T	P, R	DAL,IRC2,MSI,OHM, SOA
	Resistance	Power	Char.	Term.	Resistance Tol./	Level 1	Level 2	
Part Number	Value (Ohms)	Rating (mW)	(^)	Type (@)	Multiplier (#)	FRL (&)	FRL (&)	Manufacturer
M55342^06@7#32&	7,320	50 (char. E, H) or 100 (char. K, M)	E, H, K, M	B, C, W	E	S, T	P, R	DAL,IRC2,MSI,OHM, SOA
M55342^06@7#50&	7,500	50 (char. E, H) or 100 (char. K, M)	E, H, K, M	B, C, W	E, H, K	S, T	P, R	DAL,IRC2,MSI,OHM, SOA
M55342^06@7#68&	7,680	50 (char. E, H) or 100 (char. K, M)	E, H, K, M	B, C, W	E	S, T	P, R	DAL,IRC2,MSI,OHM, SOA
M55342^06@7#87&	7,870	50 (char. E, H) or 100 (char. K, M)	E, H, K, M	B, C, W	E	S, T	P, R	DAL,IRC2,MSI,OHM, SOA

M55342^06@8#06&	8,060	50 (char. E, H) or 100 (char. K, M)	E, H, K, M	B, C, W	E	S, T	P, R	DAL,IRC2,MSI,OHM, SOA
M55342^06@8#20&	8,200	50 (char. E, H) or 100 (char. K, M)	E, H, K, M	B, C, W	H, K, N	S, T	P, R	DAL,IRC2,MSI,OHM, SOA
M55342^06@8#25&	8,250	50 (char. E, H) or 100 (char. K, M)	E, H, K, M	B, C, W	E	S, T	P, R	DAL,IRC2,MSI,OHM, SOA
M55342^06@8#45&	8,450	50 (char. E, H) or 100 (char. K, M)	E, H, K, M	B, C, W	E	S, T	P, R	DAL,IRC2,MSI,OHM, SOA
M55342^06@8#66&	8,660	50 (char. E, H) or 100 (char. K, M)	E, H, K, M	B, C, W	E	S, T	P, R	DAL,IRC2,MSI,OHM, SOA
	Resistance	Power	Char.	Term.	Resistance Tol./	Level 1	Level 2	
Part Number	Value (Ohms)	Rating (mW)	(^)	Type (@)	Multiplier (#)	FRL (&)	FRL (&)	Manufacturer
M55342^06@8#87&	8,870	50 (char. E, H) or 100 (char. K, M)	E, H, K, M	B, C, W	E	S, T	P, R	DAL,IRC2,MSI,OHM, SOA
M55342^06@9#09&	9,090	50 (char. E, H) or 100 (char. K, M)	E, H, K, M	B, C, W	E	S, T	P, R	DAL,IRC2,MSI,OHM, SOA
M55342^06@9#10&	9,100	50 (char. E, H) or 100 (char. K, M)	E, H, K, M	B, C, W	H, K	S, T	P, R	DAL,IRC2,MSI,OHM, SOA
M55342^06@9#31&	9,310	50 (char. E, H) or 100 (char. K, M)	E, H, K, M	B, C, W	E	S, T	P, R	DAL,IRC2,MSI,OHM, SOA
M55342^06@9#53&	9,530	50 (char. E, H) or 100 (char. K, M)	E, H, K, M	B, C, W	E	S, T	P, R	DAL,IRC2,MSI,OHM, SOA
M55342^06@9#76&	9,760	50 (char. E, H) or 100 (char. K, M)	E, H, K, M	B, C, W	E	S, T	P, R	DAL,IRC2,MSI,OHM, SOA
	Resistance	Power	Char.	Term.	Resistance Tol./	Level 1	Level 2	
Part Number	Value (Ohms)	Rating (mW)	(^)	Type (@)	Multiplier (#)	FRL (&)	FRL (&)	Manufacturer

MIL-PRF-55342/6 (RM0705) Film Chip Resistors: 10,000 Ohms Through 97,600 Ohms

	Resistance	Power	Char.	Term.	Resistance Tol./	Level 1	Level 2	
Part Number	Value (Ohms)	Rating (mW)	(^)	Type (@)	Multiplier (#)	FRL (&)	FRL (&)	Manufacturer
M55342^06@10#0&	10,000	50 (char. E, H) or 100 (char. K, M)	E, H, K, M	B, C, W	E, H, K, N	S, T	P, R	DAL,IRC2,MSI,OHM, SOA
M55342^06@10#2&	10,200	50 (char. E, H) or 100 (char. K, M)	E, H, K, M	B, C, W	E	S, T	P, R	DAL,IRC2,MSI,OHM, SOA
M55342^06@10#5&	10,500	50 (char. E, H) or 100 (char. K, M)	E, H, K, M	B, C, W	E	S, T	P, R	DAL,IRC2,MSI,OHM, SOA
M55342^06@10#7&	10,700	50 (char. E, H) or 100 (char. K, M)	E, H, K, M	B, C, W	E	S, T	P, R	DAL,IRC2,MSI,OHM, SOA
M55342^06@11#0&	11,000	50 (char. E, H) or 100 (char. K, M)	E, H, K, M	B, C, W	E, H, K	S, T	P, R	DAL,IRC2,MSI,OHM, SOA
M55342^06@11#3&	11,300	50 (char. E, H) or 100 (char. K, M)	E, H, K, M	B, C, W	E	S, T	P, R	DAL,IRC2,MSI,OHM, SOA
M55342^06@11#5&	11,500	50 (char. E, H) or 100 (char. K, M)	E, H, K, M	B, C, W	E	S, T	P, R	DAL,IRC2,MSI,OHM, SOA
M55342^06@11#8&	11,800	50 (char. E, H) or 100 (char. K, M)	E, H, K, M	B, C, W	E	S, T	P, R	DAL,IRC2,MSI,OHM, SOA
M55342^06@12#0&	12,000	50 (char. E, H) or 100 (char. K, M)	E, H, K, M	B, C, W	H, K, N	S, T	P, R	DAL,IRC2,MSI,OHM, SOA
	Resistance	Power	Char.	Term.	Resistance Tol./	Level 1	Level 2	
Part Number	Value (Ohms)	Rating (mW)	(^)	Type (@)	Multiplier (#)	FRL (&)	FRL (&)	Manufacturer
M55342^06@12#1&	12,100	50 (char. E, H) or 100 (char. K, M)	E, H, K, M	B, C, W	E	S, T	P, R	DAL,IRC2,MSI,OHM, SOA
M55342^06@12#4&	12,400	50 (char. E, H) or 100 (char. K, M)	E, H, K, M	B, C, W	E	S, T	P, R	DAL,IRC2,MSI,OHM, SOA
M55342^06@12#7&	12,700	50 (char. E, H) or 100 (char. K, M)	E, H, K, M	B, C, W	E	S, T	P, R	DAL,IRC2,MSI,OHM, SOA
M55342^06@13#0&	13,000	50 (char. E, H) or 100 (char. K, M)	E, H, K, M	B, C, W	E, H, K	S, T	P, R	DAL,IRC2,MSI,OHM, SOA
M55342^06@13#3&	13,300	50 (char. E, H) or 100 (char. K, M)	E, H, K, M	B, C, W	E	S, T	P, R	DAL,IRC2,MSI,OHM, SOA
M55342^06@13#7&	13,700	50 (char. E, H) or 100 (char. K, M)	E, H, K, M	B, C, W	E	S, T	P, R	DAL,IRC2,MSI,OHM, SOA
M55342^06@14#0&	14,000	50 (char. E, H) or 100 (char. K, M)	E, H, K, M	B, C, W	E	S, T	P, R	DAL,IRC2,MSI,OHM, SOA
M55342^06@14#3&	14,300	50 (char. E, H) or 100 (char. K, M)	E, H, K, M	B, C, W	E	S, T	P, R	DAL,IRC2,MSI,OHM, SOA
M55342^06@14#7&	14,700	50 (char. E, H) or 100 (char. K, M)	E, H, K, M	B, C, W	E	S, T	P, R	DAL,IRC2,MSI,OHM, SOA
	Resistance	Power	Char.	Term.	Resistance Tol./	Level 1	Level 2	
Part Number	Value (Ohms)	Rating (mW)	(^)	Type (@)	Multiplier (#)	FRL (&)	FRL (&)	Manufacturer
M55342^06@15#0&	15,000	50 (char. E, H) or 100 (char. K, M)	E, H, K, M	B, C, W	E, H, K, N	S, T	P, R	DAL,IRC2,MSI,OHM, SOA
M55342^06@15#4&	15,400	50 (char. E, H) or 100 (char. K, M)	E, H, K, M	B, C, W	E	S, T	P, R	DAL,IRC2,MSI,OHM, SOA
M55342^06@15#8&	15,800	50 (char. E, H) or 100 (char. K, M)	E, H, K, M	B, C, W	E	S, T	P, R	DAL,IRC2,MSI,OHM, SOA

M55342^06@16#0&	16,000	50 (char. E, H) or 100 (char. K, M)	E, H, K, M	B, C, W	H, K	S, T	P, R	DAL,IRC2,MSI,OHM, SOA
M55342^06@16#2&	16,200	50 (char. E, H) or 100 (char. K, M)	E, H, K, M	B, C, W	E	S, T	P, R	DAL,IRC2,MSI,OHM, SOA
M55342^06@16#5&	16,500	50 (char. E, H) or 100 (char. K, M)	E, H, K, M	B, C, W	E	S, T	P, R	DAL,IRC2,MSI,OHM, SOA
M55342^06@16#9&	16,900	50 (char. E, H) or 100 (char. K, M)	E, H, K, M	B, C, W	E	S, T	P, R	DAL,IRC2,MSI,OHM, SOA
M55342^06@17#4&	17,400	50 (char. E, H) or 100 (char. K, M)	E, H, K, M	B, C, W	E	S, T	P, R	DAL,IRC2,MSI,OHM, SOA
M55342^06@17#8&	17,800	50 (char. E, H) or 100 (char. K, M)	E, H, K, M	B, C, W	E	S, T	P, R	DAL,IRC2,MSI,OHM, SOA
	Resistance	Power	Char.	Term.	Resistance Tol./	Level 1	Level 2	
Part Number	Value (Ohms)	Rating (mW)	(^)	Type (@)	Multiplier (#)	FRL (&)	FRL (&)	Manufacturer
M55342^06@18#0&	18,000	50 (char. E, H) or 100 (char. K, M)	E, H, K, M	B, C, W	H, K, N	S, T	P, R	DAL,IRC2,MSI,OHM, SOA
M55342^06@18#2&	18,200	50 (char. E, H) or 100 (char. K, M)	E, H, K, M	B, C, W	E	S, T	P, R	DAL,IRC2,MSI,OHM, SOA
M55342^06@18#7&	18,700	50 (char. E, H) or 100 (char. K, M)	E, H, K, M	B, C, W	E	S, T	P, R	DAL,IRC2,MSI,OHM, SOA
M55342^06@19#1&	19,100	50 (char. E, H) or 100 (char. K, M)	E, H, K, M	B, C, W	E	S, T	P, R	DAL,IRC2,MSI,OHM, SOA
M55342^06@19#6&	19,600	50 (char. E, H) or 100 (char. K, M)	E, H, K, M	B, C, W	E	S, T	P, R	DAL,IRC2,MSI,OHM, SOA
M55342^06@20#0&	20,000	50 (char. E, H) or 100 (char. K, M)	E, H, K, M	B, C, W	E, H, K, N	S, T	P, R	DAL,IRC2,MSI,OHM, SOA
M55342^06@20#5&	20,500	50 (char. E, H) or 100 (char. K, M)	E, H, K, M	B, C, W	E	S, T	P, R	DAL,IRC2,MSI,OHM, SOA
M55342^06@21#0&	21,000	50 (char. E, H) or 100 (char. K, M)	E, H, K, M	B, C, W	E	S, T	P, R	DAL,IRC2,MSI,OHM, SOA
M55342^06@21#5&	21,500	50 (char. E, H) or 100 (char. K, M)	E, H, K, M	B, C, W	E	S, T	P, R	DAL,IRC2,MSI,OHM, SOA
	Resistance	Power	Char.	Term.	Resistance Tol./	Level 1	Level 2	
Part Number	Value (Ohms)	Rating (mW)	(^)	Type (@)	Multiplier (#)	FRL (&)	FRL (&)	Manufacturer
M55342^06@22#0&	22,000	50 (char. E, H) or 100 (char. K, M)	E, H, K, M	B, C, W	H, K, N	S, T	P, R	DAL,IRC2,MSI,OHM, SOA
M55342^06@22#1&	22,100	50 (char. E, H) or 100 (char. K, M)	E, H, K, M	B, C, W	E	S, T	P, R	DAL,IRC2,MSI,OHM, SOA
M55342^06@22#6&	22,600	50 (char. E, H) or 100 (char. K, M)	E, H, K, M	B, C, W	E	S, T	P, R	DAL,IRC2,MSI,OHM, SOA
M55342^06@23#2&	23,200	50 (char. E, H) or 100 (char. K, M)	E, H, K, M	B, C, W	E	S, T	P, R	DAL,IRC2,MSI,OHM, SOA
M55342^06@23#7&	23,700	50 (char. E, H) or 100 (char. K, M)	E, H, K, M	B, C, W	E	S, T	P, R	DAL,IRC2,MSI,OHM, SOA
M55342^06@24#0&	24,000	50 (char. E, H) or 100 (char. K, M)	E, H, K, M	B, C, W	H, K	S, T	P, R	DAL,IRC2,MSI,OHM, SOA
M55342^06@24#3&	24,300	50 (char. E, H) or 100 (char. K, M)	E, H, K, M	B, C, W	E	S, T	P, R	DAL,IRC2,MSI,OHM, SOA
M55342^06@24#9&	24,900	50 (char. E, H) or 100 (char. K, M)	E, H, K, M	B, C, W	E	S, T	P, R	DAL,IRC2,MSI,OHM, SOA
M55342^06@25#5&	25,500	50 (char. E, H) or 100 (char. K, M)	E, H, K, M	B, C, W	E	S, T	P, R	DAL,IRC2,MSI,OHM, SOA
	Resistance	Power	Char.	Term.	Resistance Tol./	Level 1	Level 2	
Part Number	Value (Ohms)	Rating (mW)	(^)	Type (@)	Multiplier (#)	FRL (&)	FRL (&)	Manufacturer
M55342^06@26#1&	26,100	50 (char. E, H) or 100 (char. K, M)	E, H, K, M	B, C, W	E	S, T	P, R	DAL,IRC2,MSI,OHM, SOA
M55342^06@26#7&	26,700	50 (char. E, H) or 100 (char. K, M)	E, H, K, M	B, C, W	E	S, T	P, R	DAL,IRC2,MSI,OHM, SOA
M55342^06@27#0&	27,000	50 (char. E, H) or 100 (char. K, M)	E, H, K, M	B, C, W	H, K, N	S, T	P, R	DAL,IRC2,MSI,OHM, SOA
M55342^06@27#4&	27,400	50 (char. E, H) or 100 (char. K, M)	E, H, K, M	B, C, W	E	S, T	P, R	DAL,IRC2,MSI,OHM, SOA
M55342^06@28#0&	28,000	50 (char. E, H) or 100 (char. K, M)	E, H, K, M	B, C, W	E	S, T	P, R	DAL,IRC2,MSI,OHM, SOA
M55342^06@28#7&	28,700	50 (char. E, H) or 100 (char. K, M)	E, H, K, M	B, C, W	E	S, T	P, R	DAL,IRC2,MSI,OHM, SOA
M55342^06@29#4&	29,400	50 (char. E, H) or 100 (char. K, M)	E, H, K, M	B, C, W	E	S, T	P, R	DAL,IRC2,MSI,OHM, SOA
M55342^06@30#0&	30,000	50 (char. E, H) or 100 (char. K, M)	E, H, K, M	B, C, W	H, K	S, T	P, R	DAL,IRC2,MSI,OHM, SOA
M55342^06@30#1&	30,100	50 (char. E, H) or 100 (char. K, M)	E, H, K, M	B, C, W	E	S, T	P, R	DAL,IRC2,MSI,OHM, SOA
	Resistance	Power	Char.	Term.	Resistance Tol./	Level 1	Level 2	
Part Number	Value (Ohms)	Rating (mW)	(^)	Type (@)	Multiplier (#)	FRL (&)	FRL (&)	Manufacturer
M55342^06@30#9&	30,900	50 (char. E, H) or 100 (char. K, M)	E, H, K, M	B, C, W	E	S, T	P, R	DAL,IRC2,MSI,OHM, SOA
M55342^06@31#6&	31,600	50 (char. E, H) or 100 (char. K, M)	E, H, K, M	B, C, W	E	S, T	P, R	DAL,IRC2,MSI,OHM, SOA
M55342^06@32#4&	32,400	50 (char. E, H) or 100 (char. K, M)	E, H, K, M	B, C, W	E	S, T	P, R	DAL,IRC2,MSI,OHM, SOA
M55342^06@33#0&	33,000	50 (char. E, H) or 100 (char. K, M)	E, H, K, M	B, C, W	H, K, N	S, T	P, R	DAL,IRC2,MSI,OHM, SOA
M55342^06@33#2&	33,200	50 (char. E, H) or 100 (char. K, M)	E, H, K, M	B, C, W	E	S, T	P, R	DAL,IRC2,MSI,OHM, SOA
M55342^06@34#0&	34,000	50 (char. E, H) or 100 (char. K, M)	E, H, K, M	B, C, W	E	S, T	P, R	DAL,IRC2,MSI,OHM, SOA

M55342^06@34#8&	34,800	50 (char. E, H) or 100 (char. K, M)	E, H, K, M	B, C, W	E	S, T	P, R	DAL,IRC2,MSI,OHM, SOA
M55342^06@35#7&	35,700	50 (char. E, H) or 100 (char. K, M)	E, H, K, M	B, C, W	E	S, T	P, R	DAL,IRC2,MSI,OHM, SOA
M55342^06@36#0&	36,000	50 (char. E, H) or 100 (char. K, M)	E, H, K, M	B, C, W	H, K	S, T	P, R	DAL,IRC2,MSI,OHM, SOA
	Resistance	Power	Char.	Term.	Resistance Tol./	Level 1	Level 2	
Part Number	Value (Ohms)	Rating (mW)	(^)	Type (@)	Multiplier (#)	FRL (&)	FRL (&)	Manufacturer
M55342^06@36#5&	36,500	50 (char. E, H) or 100 (char. K, M)	E, H, K, M	B, C, W	E	S, T	P, R	DAL,IRC2,MSI,OHM, SOA
M55342^06@37#4&	37,400	50 (char. E, H) or 100 (char. K, M)	E, H, K, M	B, C, W	E	S, T	P, R	DAL,IRC2,MSI,OHM, SOA
M55342^06@38#3&	38,300	50 (char. E, H) or 100 (char. K, M)	E, H, K, M	B, C, W	E	S, T	P, R	DAL,IRC2,MSI,OHM, SOA
M55342^06@39#0&	39,000	50 (char. E, H) or 100 (char. K, M)	E, H, K, M	B, C, W	H, K, N	S, T	P, R	DAL,IRC2,MSI,OHM, SOA
M55342^06@39#2&	39,200	50 (char. E, H) or 100 (char. K, M)	E, H, K, M	B, C, W	E	S, T	P, R	DAL,IRC2,MSI,OHM, SOA
M55342^06@40#2&	40,200	50 (char. E, H) or 100 (char. K, M)	E, H, K, M	B, C, W	E	S, T	P, R	DAL,IRC2,MSI,OHM, SOA
M55342^06@41#2&	41,200	50 (char. E, H) or 100 (char. K, M)	E, H, K, M	B, C, W	E	S, T	P, R	DAL,IRC2,MSI,OHM, SOA
M55342^06@42#2&	42,200	50 (char. E, H) or 100 (char. K, M)	E, H, K, M	B, C, W	E	S, T	P, R	DAL,IRC2,MSI,OHM, SOA
M55342^06@43#0&	43,000	50 (char. E, H) or 100 (char. K, M)	E, H, K, M	B, C, W	H, K	S, T	P, R	DAL,IRC2,MSI,OHM, SOA
	Resistance	Power	Char.	Term.	Resistance Tol./	Level 1	Level 2	
Part Number	Value (Ohms)	Rating (mW)	(^)	Type (@)	Multiplier (#)	FRL (&)	FRL (&)	Manufacturer
M55342^06@43#2&	43,200	50 (char. E, H) or 100 (char. K, M)	E, H, K, M	B, C, W	E	S, T	P, R	DAL,IRC2,MSI,OHM, SOA
M55342^06@44#2&	44,200	50 (char. E, H) or 100 (char. K, M)	E, H, K, M	B, C, W	E	S, T	P, R	DAL,IRC2,MSI,OHM, SOA
M55342^06@45#3&	45,300	50 (char. E, H) or 100 (char. K, M)	E, H, K, M	B, C, W	E	S, T	P, R	DAL,IRC2,MSI,OHM, SOA
M55342^06@46#4&	46,400	50 (char. E, H) or 100 (char. K, M)	E, H, K, M	B, C, W	E	S, T	P, R	DAL,IRC2,MSI,OHM, SOA
M55342^06@47#0&	47,000	50 (char. E, H) or 100 (char. K, M)	E, H, K, M	B, C, W	H, K, N	S, T	P, R	DAL,IRC2,MSI,OHM, SOA
M55342^06@47#5&	47,500	50 (char. E, H) or 100 (char. K, M)	E, H, K, M	B, C, W	E	S, T	P, R	DAL,IRC2,MSI,OHM, SOA
M55342^06@48#7&	48,700	50 (char. E, H) or 100 (char. K, M)	E, H, K, M	B, C, W	E	S, T	P, R	DAL,IRC2,MSI,OHM, SOA
M55342^06@49#9&	49,900	50 (char. E, H) or 100 (char. K, M)	E, H, K, M	B, C, W	E	S, T	P, R	DAL,IRC2,MSI,OHM, SOA
M55342^06@51#0&	51,000	50 (char. E, H) or 100 (char. K, M)	E, H, K, M	B, C, W	H, K	S, T	P, R	DAL,IRC2,MSI,OHM, SOA
	Resistance	Power	Char.	Term.	Resistance Tol./	Level 1	Level 2	
Part Number	Value (Ohms)	Rating (mW)	(^)	Type (@)	Multiplier (#)	FRL (&)	FRL (&)	Manufacturer
M55342^06@51#1&	51,100	50 (char. E, H) or 100 (char. K, M)	E, H, K, M	B, C, W	E	S, T	P, R	DAL,IRC2,MSI,OHM, SOA
M55342^06@52#3&	52,300	50 (char. E, H) or 100 (char. K, M)	E, H, K, M	B, C, W	E	S, T	P, R	DAL,IRC2,MSI,OHM, SOA
M55342^06@53#6&	53,600	50 (char. E, H) or 100 (char. K, M)	E, H, K, M	B, C, W	E	S, T	P, R	DAL,IRC2,MSI,OHM, SOA
M55342^06@54#9&	54,900	50 (char. E, H) or 100 (char. K, M)	E, H, K, M	B, C, W	E	S, T	P, R	DAL,IRC2,MSI,OHM, SOA
M55342^06@56#0&	56,000	50 (char. E, H) or 100 (char. K, M)	E, H, K, M	B, C, W	H, K, N	S, T	P, R	DAL,IRC2,MSI,OHM, SOA
M55342^06@56#2&	56,200	50 (char. E, H) or 100 (char. K, M)	E, H, K, M	B, C, W	E	S, T	P, R	DAL,IRC2,MSI,OHM, SOA
M55342^06@57#6&	57,600	50 (char. E, H) or 100 (char. K, M)	E, H, K, M	B, C, W	E	S, T	P, R	DAL,IRC2,MSI,OHM, SOA
M55342^06@59#0&	59,000	50 (char. E, H) or 100 (char. K, M)	E, H, K, M	B, C, W	E	S, T	P, R	DAL,IRC2,MSI,OHM, SOA
M55342^06@60#4&	60,400	50 (char. E, H) or 100 (char. K, M)	E, H, K, M	B, C, W	E	S, T	P, R	DAL,IRC2,MSI,OHM, SOA
	Resistance	Power	Char.	Term.	Resistance Tol./	Level 1	Level 2	
Part Number	Value (Ohms)	Rating (mW)	(^)	Type (@)	Multiplier (#)	FRL (&)	FRL (&)	Manufacturer
M55342^06@61#9&	61,900	50 (char. E, H) or 100 (char. K, M)	E, H, K, M	B, C, W	E	S, T	P, R	DAL,IRC2,MSI,OHM, SOA
M55342^06@62#0&	62,000	50 (char. E, H) or 100 (char. K, M)	E, H, K, M	B, C, W	H, K	S, T	P, R	DAL,IRC2,MSI,OHM, SOA
M55342^06@63#4&	63,400	50 (char. E, H) or 100 (char. K, M)	E, H, K, M	B, C, W	E	S, T	P, R	DAL,IRC2,MSI,OHM, SOA
M55342^06@64#9&	64,900	50 (char. E, H) or 100 (char. K, M)	E, H, K, M	B, C, W	E	S, T	P, R	DAL,IRC2,MSI,OHM, SOA
M55342^06@66#5&	66,500	50 (char. E, H) or 100 (char. K, M)	E, H, K, M	B, C, W	E	S, T	P, R	DAL,IRC2,MSI,OHM, SOA
M55342^06@68#0&	68,000	50 (char. E, H) or 100 (char. K, M)	E, H, K, M	B, C, W	H, K, N	S, T	P, R	DAL,IRC2,MSI,OHM, SOA
M55342^06@68#1&	68,100	50 (char. E, H) or 100 (char. K, M)	E, H, K, M	B, C, W	E	S, T	P, R	DAL,IRC2,MSI,OHM, SOA
M55342^06@69#8&	69,800	50 (char. E, H) or 100 (char. K, M)	E, H, K, M	B, C, W	E	S, T	P, R	DAL,IRC2,MSI,OHM, SOA
M55342^06@71#5&	71,500	50 (char. E, H) or 100 (char. K, M)	E, H, K, M	B, C, W	E	S, T	P, R	DAL,IRC2,MSI,OHM, SOA

	Resistance	Power	Char.	Term.	Resistance Tol./	Level 1	Level 2	
Part Number	Value (Ohms)	Rating (mW)	(^)	Type (@)	Multiplier (#)	FRL (&)	FRL (&)	Manufacturer
M55342^06@73#2&	73,200	50 (char. E, H) or 100 (char. K, M)	E, H, K, M	B, C, W	E	S, T	P, R	DAL,IRC2,MSI,OHM, SOA
M55342^06@75#0&	75,000	50 (char. E, H) or 100 (char. K, M)	E, H, K, M	B, C, W	E, H, K	S, T	P, R	DAL,IRC2,MSI,OHM, SOA
M55342^06@76#8&	76,800	50 (char. E, H) or 100 (char. K, M)	E, H, K, M	B, C, W	E	S, T	P, R	DAL,IRC2,MSI,OHM, SOA
M55342^06@78#7&	78,700	50 (char. E, H) or 100 (char. K, M)	E, H, K, M	B, C, W	E	S, T	P, R	DAL,IRC2,MSI,OHM, SOA
M55342^06@80#6&	80,600	50 (char. E, H) or 100 (char. K, M)	E, H, K, M	B, C, W	E	S, T	P, R	DAL,IRC2,MSI,OHM, SOA
M55342^06@82#0&	82,000	50 (char. E, H) or 100 (char. K, M)	E, H, K, M	B, C, W	H, K, N	S, T	P, R	DAL,IRC2,MSI,OHM, SOA
M55342^06@82#5&	82,500	50 (char. E, H) or 100 (char. K, M)	E, H, K, M	B, C, W	E	S, T	P, R	DAL,IRC2,MSI,OHM, SOA
M55342^06@84#5&	84,500	50 (char. E, H) or 100 (char. K, M)	E, H, K, M	B, C, W	E	S, T	P, R	DAL,IRC2,MSI,OHM, SOA
M55342^06@86#6&	86,600	50 (char. E, H) or 100 (char. K, M)	E, H, K, M	B, C, W	E	S, T	P, R	DAL,IRC2,MSI,OHM, SOA
	Resistance	Power	Char.	Term.	Resistance Tol./	Level 1	Level 2	
Part Number	Value (Ohms)	Rating (mW)	(^)	Type (@)	Multiplier (#)	FRL (&)	FRL (&)	Manufacturer
M55342^06@88#7&	88,700	50 (char. E, H) or 100 (char. K, M)	E, H, K, M	B, C, W	E	S, T	P, R	DAL,IRC2,MSI,OHM, SOA
M55342^06@90#9&	90,900	50 (char. E, H) or 100 (char. K, M)	E, H, K, M	B, C, W	E	S, T	P, R	DAL,IRC2,MSI,OHM, SOA
M55342^06@91#0&	91,000	50 (char. E, H) or 100 (char. K, M)	E, H, K, M	B, C, W	H, K	S, T	P, R	DAL,IRC2,MSI,OHM, SOA
M55342^06@93#1&	93,100	50 (char. E, H) or 100 (char. K, M)	E, H, K, M	B, C, W	E	S, T	P, R	DAL,IRC2,MSI,OHM, SOA
M55342^06@95#3&	95,300	50 (char. E, H) or 100 (char. K, M)	E, H, K, M	B, C, W	E	S, T	P, R	DAL,IRC2,MSI,OHM, SOA
M55342^06@97#6&	97,600	50 (char. E, H) or 100 (char. K, M)	E, H, K, M	B, C, W	E	S, T	P, R	DAL,IRC2,MSI,OHM, SOA
	Resistance	Power	Char.	Term.	Resistance Tol./	Level 1	Level 2	
Part Number	Value (Ohms)	Rating (mW)	(^)	Type (@)	Multiplier (#)	FRL (&)	FRL (&)	Manufacturer

MIL-PRF-55342/6 (RM0705) Film Chip Resistors: 100,000 Ohms Through 1,000,000 Ohms

	Resistance	Power	Char.	Term.	Resistance Tol./	Level 1	Level 2	
Part Number	Value (Ohms)	Rating (mW)	(^)	Type (@)	Multiplier (#)	FRL (&)	FRL (&)	Manufacturer
M55342^06@100#&	100,000	50 (char. E, H) or 100 (char. K, M)	E, H, K, M	B, C, W	E, H, K, N	S, T	P, R	DAL,IRC2,MSI,OHM, SOA
M55342^06@102#&	102,000	50 (char. E, H) or 100 (char. K, M)	E, H, K, M	B, C, W	E	S, T	P, R	DAL,IRC2,MSI,OHM, SOA
M55342^06@105#&	105,000	50 (char. E, H) or 100 (char. K, M)	E, H, K, M	B, C, W	E	S, T	P, R	DAL,IRC2,MSI,OHM, SOA
M55342^06@107#&	107,000	50 (char. E, H) or 100 (char. K, M)	E, H, K, M	B, C, W	E	S, T	P, R	DAL,IRC2,MSI,OHM, SOA
M55342^06@110#&	110,000	50 (char. E, H) or 100 (char. K, M)	E, H, K, M	B, C, W	E, H, K	S, T	P, R	DAL,IRC2,MSI,OHM, SOA
M55342^06@113#&	113,000	50 (char. E, H) or 100 (char. K, M)	E, H, K, M	B, C, W	E	S, T	P, R	DAL,IRC2,MSI,OHM, SOA
M55342^06@115#&	115,000	50 (char. E, H) or 100 (char. K, M)	E, H, K, M	B, C, W	E	S, T	P, R	DAL,IRC2,MSI,OHM, SOA
M55342^06@118#&	118,000	50 (char. E, H) or 100 (char. K, M)	E, H, K, M	B, C, W	E	S, T	P, R	DAL,IRC2,MSI,OHM, SOA
M55342^06@120#&	120,000	50 (char. E, H) or 100 (char. K, M)	E, H, K, M	B, C, W	H, K, N	S, T	P, R	DAL,IRC2,MSI,OHM, SOA
M55342^06@121#&	121,000	50 (char. E, H) or 100 (char. K, M)	E, H, K, M	B, C, W	E	S, T	P, R	DAL,IRC2,MSI,OHM, SOA
	Resistance	Power	Char.	Term.	Resistance Tol./	Level 1	Level 2	
Part Number	Value (Ohms)	Rating (mW)	(^)	Type (@)	Multiplier (#)	FRL (&)	FRL (&)	Manufacturer
M55342^06@124#&	124,000	50 (char. E, H) or 100 (char. K, M)	E, H, K, M	B, C, W	E	S, T	P, R	DAL,IRC2,MSI,OHM, SOA
M55342^06@127#&	127,000	50 (char. E, H) or 100 (char. K, M)	E, H, K, M	B, C, W	E	S, T	P, R	DAL,MSI,OHM,SOA
M55342^06@130#&	130,000	50 (char. E, H) or 100 (char. K, M)	E, H, K, M	B, C, W	E, H, K	S, T	P, R	DAL,MSI,OHM,SOA
M55342^06@133#&	133,000	50 (char. E, H) or 100 (char. K, M)	E, H, K, M	B, C, W	E	S, T	P, R	DAL,MSI,OHM,SOA
M55342^06@137#&	137,000	50 (char. E, H) or 100 (char. K, M)	E, H, K, M	B, C, W	E	S, T	P, R	DAL,MSI,OHM,SOA
M55342^06@140#&	140,000	50 (char. E, H) or 100 (char. K, M)	E, H, K, M	B, C, W	E	S, T	P, R	DAL,MSI,OHM,SOA
M55342^06@143#&	143,000	50 (char. E, H) or 100 (char. K, M)	E, H, K, M	B, C, W	E	S, T	P, R	DAL,MSI,OHM,SOA

M55342^06@147#&	147,000	50 (char. E, H) or 100 (char. K, M)	E, H, K, M	B, C, W	E	S, T	P, R	DAL,MSI,OHM,SOA
M55342^06@150#&	150,000	50 (char. E, H) or 100 (char. K, M)	E, H, K, M	B, C, W	E, H, K, N	S, T	P, R	DAL,MSI,OHM,SOA
	Resistance	Power	Char.	Term.	Resistance Tol./	Level 1	Level 2	
Part Number	Value (Ohms)	Rating (mW)	(^)	Type (@)	Multiplier (#)	FRL (&)	FRL (&)	Manufacturer
M55342^06@154#&	154,000	50 (char. E, H) or 100 (char. K, M)	E, H, K, M	B, C, W	E	S, T	P, R	DAL,MSI,OHM,SOA
M55342^06@158#&	158,000	50 (char. E, H) or 100 (char. K, M)	E, H, K, M	B, C, W	E	S, T	P, R	DAL,MSI,OHM,SOA
M55342^06@160#&	160,000	50 (char. E, H) or 100 (char. K, M)	E, H, K, M	B, C, W	H, K	S, T	P, R	DAL,MSI,OHM,SOA
M55342^06@162#&	162,000	50 (char. E, H) or 100 (char. K, M)	E, H, K, M	B, C, W	E	S, T	P, R	DAL,MSI,OHM,SOA
M55342^06@165#&	165,000	50 (char. E, H) or 100 (char. K, M)	E, H, K, M	B, C, W	E	S, T	P, R	DAL,MSI,OHM,SOA
M55342^06@169#&	169,000	50 (char. E, H) or 100 (char. K, M)	E, H, K, M	B, C, W	E	S, T	P, R	DAL,MSI,OHM,SOA
M55342^06@174#&	174,000	50 (char. E, H) or 100 (char. K, M)	E, H, K, M	B, C, W	E	S, T	P, R	DAL,MSI,OHM,SOA
M55342^06@178#&	178,000	50 (char. E, H) or 100 (char. K, M)	E, H, K, M	B, C, W	E	S, T	P, R	DAL,MSI,OHM,SOA
M55342^06@180#&	180,000	50 (char. E, H) or 100 (char. K, M)	E, H, K, M	B, C, W	H, K, N	S, T	P, R	DAL,MSI,OHM,SOA
	Resistance	Power	Char.	Term.	Resistance Tol./	Level 1	Level 2	
Part Number	Value (Ohms)	Rating (mW)	(^)	Type (@)	Multiplier (#)	FRL (&)	FRL (&)	Manufacturer
M55342^06@182#&	182,000	50 (char. E, H) or 100 (char. K, M)	E, H, K, M	B, C, W	E	S, T	P, R	DAL,MSI,OHM,SOA
M55342^06@187#&	187,000	50 (char. E, H) or 100 (char. K, M)	E, H, K, M	B, C, W	E	S, T	P, R	DAL,MSI,OHM,SOA
M55342^06@191#&	191,000	50 (char. E, H) or 100 (char. K, M)	E, H, K, M	B, C, W	E	S, T	P, R	DAL,MSI,OHM,SOA
M55342^06@196#&	196,000	50 (char. E, H) or 100 (char. K, M)	E, H, K, M	B, C, W	E	S, T	P, R	DAL,MSI,OHM,SOA
M55342^06@200#&	200,000	50 (char. E, H) or 100 (char. K, M)	E, H, K, M	B, C, W	E, H, K, N	S, T	P, R	DAL,MSI,OHM,SOA
M55342^06@205#&	205,000	50 (char. E, H) or 100 (char. K, M)	E, H, K, M	B, C, W	E	S, T	P, R	DAL,MSI,OHM,SOA
M55342^06@210#&	210,000	50 (char. E, H) or 100 (char. K, M)	E, H, K, M	B, C, W	E	S, T	P, R	DAL,MSI,OHM,SOA
M55342^06@215#&	215,000	50 (char. E, H) or 100 (char. K, M)	E, H, K, M	B, C, W	E	S, T	P, R	DAL,MSI,OHM,SOA
M55342^06@220#&	220,000	50 (char. E, H) or 100 (char. K, M)	E, H, K, M	B, C, W	H, K, N	S, T	P, R	DAL,MSI,OHM,SOA
	Resistance	Power	Char.	Term.	Resistance Tol./	Level 1	Level 2	
Part Number	Value (Ohms)	Rating (mW)	(^)	Type (@)	Multiplier (#)	FRL (&)	FRL (&)	Manufacturer
M55342^06@221#&	221,000	50 (char. E, H) or 100 (char. K, M)	E, H, K, M	B, C, W	E	S, T	P, R	DAL,MSI,OHM,SOA
M55342^06@226#&	226,000	50 (char. E, H) or 100 (char. K, M)	E, H, K, M	B, C, W	E	S, T	P, R	DAL,MSI,OHM,SOA
M55342^06@232#&	232,000	50 (char. E, H) or 100 (char. K, M)	E, H, K, M	B, C, W	E	S, T	P, R	DAL,MSI,OHM,SOA
M55342^06@237#&	237,000	50 (char. E, H) or 100 (char. K, M)	E, H, K, M	B, C, W	E	S, T	P, R	DAL,MSI,OHM,SOA
M55342^06@240#&	240,000	50 (char. E, H) or 100 (char. K, M)	E, H, K, M	B, C, W	H, K	S, T	P, R	DAL,MSI,OHM,SOA
M55342^06@243#&	243,000	50 (char. E, H) or 100 (char. K, M)	E, H, K, M	B, C, W	E	S, T	P, R	DAL,MSI,OHM,SOA
M55342^06@249#&	249,000	50 (char. E, H) or 100 (char. K, M)	E, H, K, M	B, C, W	E	S, T	P, R	DAL,MSI,OHM,SOA
M55342^06@255#&	255,000	50 (char. E, H) or 100 (char. K, M)	E, H, K, M	B, C, W	E	S, T	P, R	DAL,MSI,OHM,SOA
M55342^06@261#&	261,000	50 (char. E, H) or 100 (char. K, M)	E, H, K, M	B, C, W	E	S, T	P, R	DAL,MSI,OHM,SOA
	Resistance	Power	Char.	Term.	Resistance Tol./	Level 1	Level 2	
Part Number	Value (Ohms)	Rating (mW)	(^)	Type (@)	Multiplier (#)	FRL (&)	FRL (&)	Manufacturer
M55342^06@267#&	267,000	50 (char. E, H) or 100 (char. K, M)	E, H, K, M	B, C, W	E	S, T	P, R	DAL,MSI,OHM,SOA
M55342^06@270#&	270,000	50 (char. E, H) or 100 (char. K, M)	E, H, K, M	B, C, W	H, K, N	S, T	P, R	DAL,MSI,OHM,SOA
M55342^06@274#&	274,000	50 (char. E, H) or 100 (char. K, M)	E, H, K, M	B, C, W	E	S, T	P, R	DAL,MSI,OHM,SOA
M55342^06@280#&	280,000	50 (char. E, H) or 100 (char. K, M)	E, H, K, M	B, C, W	E	S, T	P, R	DAL,MSI,OHM,SOA
M55342^06@287#&	287,000	50 (char. E, H) or 100 (char. K, M)	E, H, K, M	B, C, W	E	S, T	P, R	DAL,MSI,OHM,SOA
M55342^06@294#&	294,000	50 (char. E, H) or 100 (char. K, M)	E, H, K, M	B, C, W	E	S, T	P, R	DAL,MSI,OHM,SOA
M55342^06@300#&	300,000	50 (char. E, H) or 100 (char. K, M)	E, H, K, M	B, C, W	H, K	S, T	P, R	DAL,MSI,OHM,SOA
M55342^06@301#&	301,000	50 (char. E, H) or 100 (char. K, M)	E, H, K, M	B, C, W	E	S, T	P, R	DAL,MSI,OHM,SOA
M55342^06@309#&	309,000	50 (char. E, H) or 100 (char. K, M)	E, H, K, M	B, C, W	E	S, T	P, R	DAL,MSI,OHM,SOA
	Resistance	Power	Char.	Term.	Resistance Tol./	Level 1	Level 2	

Part Number	Value (Ohms)	Rating (mW)	(^)	Type (@)	Multiplier (#)	FRL (&)	FRL (&)	Manufacturer
M55342^06@316#&	316,000	50 (char. E, H) or 100 (char. K, M)	E, H, K, M	B, C, W	E	S, T	P, R	DAL,MSI,OHM,SOA
M55342^06@324#&	324,000	50 (char. E, H) or 100 (char. K, M)	E, H, K, M	B, C, W	E	S, T	P, R	DAL,MSI,OHM,SOA
M55342^06@330#&	330,000	50 (char. E, H) or 100 (char. K, M)	E, H, K, M	B, C, W	H, K, N	S, T	P, R	DAL,MSI,OHM,SOA
M55342^06@332#&	332,000	50 (char. E, H) or 100 (char. K, M)	E, H, K, M	B, C, W	E	S, T	P, R	DAL,MSI,OHM,SOA
M55342^06@340#&	340,000	50 (char. E, H) or 100 (char. K, M)	E, H, K, M	B, C, W	E	S, T	P, R	DAL,MSI,OHM,SOA
M55342^06@348#&	348,000	50 (char. E, H) or 100 (char. K, M)	E, H, K, M	B, C, W	E	S, T	P, R	DAL,MSI,OHM,SOA
M55342^06@357#&	357,000	50 (char. E, H) or 100 (char. K, M)	E, H, K, M	B, C, W	E	S, T	P, R	DAL,MSI,OHM,SOA
M55342^06@360#&	360,000	50 (char. E, H) or 100 (char. K, M)	E, H, K, M	B, C, W	H, K	S, T	P, R	DAL,MSI,OHM,SOA
M55342^06@365#&	365,000	50 (char. E, H) or 100 (char. K, M)	E, H, K, M	B, C, W	E	S, T	P, R	DAL,MSI,OHM,SOA
	Resistance	Power	Char.	Term.	Resistance Tol./	Level 1	Level 2	
Part Number	Value (Ohms)	Rating (mW)	(^)	Type (@)	Multiplier (#)	FRL (&)	FRL (&)	Manufacturer
M55342^06@374#&	374,000	50 (char. E, H) or 100 (char. K, M)	E, H, K, M	B, C, W	E	S, T	P, R	DAL,MSI,OHM,SOA
M55342^06@383#&	383,000	50 (char. E, H) or 100 (char. K, M)	E, H, K, M	B, C, W	E	S, T	P, R	DAL,MSI,OHM,SOA
M55342^06@390#&	390,000	50 (char. E, H) or 100 (char. K, M)	E, H, K, M	B, C, W	H, K, N	S, T	P, R	DAL,MSI,OHM,SOA
M55342^06@392#&	392,000	50 (char. E, H) or 100 (char. K, M)	E, H, K, M	B, C, W	E	S, T	P, R	DAL,MSI,OHM,SOA
M55342^06@402#&	402,000	50 (char. E, H) or 100 (char. K, M)	E, H, K, M	B, C, W	E	S, T	P, R	DAL,MSI,OHM,SOA
M55342^06@412#&	412,000	50 (char. E, H) or 100 (char. K, M)	E, H, K, M	B, C, W	E	S, T	P, R	DAL,MSI,OHM,SOA
M55342^06@422#&	422,000	50 (char. E, H) or 100 (char. K, M)	E, H, K, M	B, C, W	E	S, T	P, R	DAL,MSI,OHM,SOA
M55342^06@430#&	430,000	50 (char. E, H) or 100 (char. K, M)	E, H, K, M	B, C, W	H, K	S, T	P, R	DAL,MSI,OHM,SOA
M55342^06@432#&	432,000	50 (char. E, H) or 100 (char. K, M)	E, H, K, M	B, C, W	E	S, T	P, R	DAL,MSI,OHM,SOA
	Resistance	Power	Char.	Term.	Resistance Tol./	Level 1	Level 2	
Part Number	Value (Ohms)	Rating (mW)	(^)	Type (@)	Multiplier (#)	FRL (&)	FRL (&)	Manufacturer
M55342^06@442#&	442,000	50 (char. E, H) or 100 (char. K, M)	E, H, K, M	B, C, W	E	S, T	P, R	DAL,MSI,OHM,SOA
M55342^06@453#&	453,000	50 (char. E, H) or 100 (char. K, M)	E, H, K, M	B, C, W	E	S, T	P, R	DAL,MSI,OHM,SOA
M55342^06@464#&	464,000	50 (char. E, H) or 100 (char. K, M)	E, H, K, M	B, C, W	E	S, T	P, R	DAL,MSI,OHM,SOA
M55342^06@470#&	470,000	50 (char. E, H) or 100 (char. K, M)	E, H, K, M	B, C, W	H, K, N	S, T	P, R	DAL,MSI,OHM,SOA
M55342^06@475#&	475,000	50 (char. E, H) or 100 (char. K, M)	E, H, K, M	B, C, W	E	S, T	P, R	DAL,MSI,OHM,SOA
M55342^06@487#&	487,000	50 (char. E, H) or 100 (char. K, M)	E, H, K, M	B, C, W	E	S, T	P, R	DAL,MSI,OHM,SOA
M55342^06@499#&	499,000	50 (char. E, H) or 100 (char. K, M)	E, H, K, M	B, C, W	E	S, T	P, R	DAL,MSI,OHM,SOA
M55342^06@510#&	510,000	50 (char. E, H) or 100 (char. K, M)	E, H, K, M	B, C, W	H, K	S, T	P, R	DAL,MSI,SOA
M55342^06@511#&	511,000	50 (char. E, H) or 100 (char. K, M)	E, H, K, M	B, C, W	E	S, T	P, R	DAL,MSI,SOA
	Resistance	Power	Char.	Term.	Resistance Tol./	Level 1	Level 2	
Part Number	Value (Ohms)	Rating (mW)	(^)	Type (@)	Multiplier (#)	FRL (&)	FRL (&)	Manufacturer
M55342^06@523#&	523,000	50 (char. E, H) or 100 (char. K, M)	E, H, K, M	B, C, W	E	S, T	P, R	DAL,MSI,SOA
M55342^06@536#&	536,000	50 (char. E, H) or 100 (char. K, M)	E, H, K, M	B, C, W	E	S, T	P, R	DAL,MSI,SOA
M55342^06@549#&	549,000	50 (char. E, H) or 100 (char. K, M)	E, H, K, M	B, C, W	E	S, T	P, R	DAL,MSI,SOA
M55342^06@560#&	560,000	50 (char. E, H) or 100 (char. K, M)	E, H, K, M	B, C, W	H, K, N	S, T	P, R	DAL,MSI,SOA
M55342^06@562#&	562,000	50 (char. E, H) or 100 (char. K, M)	E, H, K, M	B, C, W	E	S, T	P, R	DAL,MSI,SOA
M55342^06@576#&	576,000	50 (char. E, H) or 100 (char. K, M)	E, H, K, M	B, C, W	E	S, T	P, R	DAL,MSI,SOA
M55342^06@590#&	590,000	50 (char. E, H) or 100 (char. K, M)	E, H, K, M	B, C, W	E	S, T	P, R	DAL,MSI,SOA
M55342^06@604#&	604,000	50 (char. E, H) or 100 (char. K, M)	E, H, K, M	B, C, W	E	S, T	P, R	DAL,MSI,SOA
M55342^06@619#&	619,000	50 (char. E, H) or 100 (char. K, M)	E, H, K, M	B, C, W	E	S, T	P, R	DAL,MSI,SOA
	Resistance	Power	Char.	Term.	Resistance Tol./	Level 1	Level 2	
Part Number	Value (Ohms)	Rating (mW)	(^)	Type (@)	Multiplier (#)	FRL (&)	FRL (&)	Manufacturer
M55342^06@620#&	620,000	50 (char. E, H) or 100 (char. K, M)	E, H, K, M	B, C, W	H, K	S, T	P, R	DAL,MSI,SOA
M55342^06@634#&	634,000	50 (char. E, H) or 100 (char. K, M)	E, H, K, M	B, C, W	E	S, T	P, R	DAL,MSI,SOA

M55342^06@649#&	649,000	50 (char. E, H) or 100 (char. K, M)	E, H, K, M	B, C, W	E	S, T	P, R	DAL,MSI,SOA
M55342^06@665#&	665,000	50 (char. E, H) or 100 (char. K, M)	E, H, K, M	B, C, W	E	S, T	P, R	DAL,MSI,SOA
M55342^06@680#&	680,000	50 (char. E, H) or 100 (char. K, M)	E, H, K, M	B, C, W	H, K, N	S, T	P, R	DAL,MSI,SOA
M55342^06@681#&	681,000	50 (char. E, H) or 100 (char. K, M)	E, H, K, M	B, C, W	E	S, T	P, R	DAL,MSI,SOA
M55342^06@698#&	698,000	50 (char. E, H) or 100 (char. K, M)	E, H, K, M	B, C, W	E	S, T	P, R	DAL,MSI,SOA
M55342^06@715#&	715,000	50 (char. E, H) or 100 (char. K, M)	E, H, K, M	B, C, W	E	S, T	P, R	DAL,MSI,SOA
M55342^06@732#&	732,000	50 (char. E, H) or 100 (char. K, M)	E, H, K, M	B, C, W	E	S, T	P, R	DAL,MSI,SOA
	Resistance	Power	Char.	Term.	Resistance Tol./	Level 1	Level 2	
Part Number	Value (Ohms)	Rating (mW)	(^)	Type (@)	Multiplier (#)	FRL (&)	FRL (&)	Manufacturer
M55342^06@750#&	750,000	50 (char. E, H) or 100 (char. K, M)	E, H, K, M	B, C, W	E, H, K	S, T	P, R	DAL,MSI,SOA
M55342^06@768#&	768,000	50 (char. E, H) or 100 (char. K, M)	E, H, K, M	B, C, W	E	S, T	P, R	DAL,MSI,SOA
M55342^06@787#&	787,000	50 (char. E, H) or 100 (char. K, M)	E, H, K, M	B, C, W	E	S, T	P, R	DAL,MSI,SOA
M55342^06@806#&	806,000	50 (char. E, H) or 100 (char. K, M)	E, H, K, M	B, C, W	E	S, T	P, R	DAL,MSI,SOA
M55342^06@820#&	820,000	50 (char. E, H) or 100 (char. K, M)	E, H, K, M	B, C, W	H, K, N	S, T	P, R	DAL,MSI,SOA
M55342^06@825#&	825,000	50 (char. E, H) or 100 (char. K, M)	E, H, K, M	B, C, W	E	S, T	P, R	DAL,MSI,SOA
M55342^06@845#&	845,000	50 (char. E, H) or 100 (char. K, M)	E, H, K, M	B, C, W	E	S, T	P, R	DAL,MSI,SOA
M55342^06@866#&	866,000	50 (char. E, H) or 100 (char. K, M)	E, H, K, M	B, C, W	E	S, T	P, R	DAL,MSI,SOA
M55342^06@887#&	887,000	50 (char. E, H) or 100 (char. K, M)	E, H, K, M	B, C, W	E	S, T	P, R	DAL,MSI,SOA
	Resistance	Power	Char.	Term.	Resistance Tol./	Level 1	Level 2	
Part Number	Value (Ohms)	Rating (mW)	(^)	Type (@)	Multiplier (#)	FRL (&)	FRL (&)	Manufacturer
M55342^06@909#&	909,000	50 (char. E, H) or 100 (char. K, M)	E, H, K, M	B, C, W	E	S, T	P, R	DAL,MSI,SOA
M55342^06@910#&	910,000	50 (char. E, H) or 100 (char. K, M)	E, H, K, M	B, C, W	H, K	S, T	P, R	DAL,MSI,SOA
M55342^06@931#&	931,000	50 (char. E, H) or 100 (char. K, M)	E, H, K, M	B, C, W	E	S, T	P, R	DAL,MSI,SOA
M55342^06@953#&	953,000	50 (char. E, H) or 100 (char. K, M)	E, H, K, M	B, C, W	E	S, T	P, R	DAL,MSI,SOA
M55342^06@976#&	976,000	50 (char. E, H) or 100 (char. K, M)	E, H, K, M	B, C, W	E	S, T	P, R	DAL,MSI,SOA
M55342^06@1#00&	1,000,000	50 (char. E, H) or 100 (char. K, M)	E, H, K, M	B, C, W	F, T, L, P	S, T	P, R	DAL,MSI,SOA
	Resistance	Power	Char.	Term.	Resistance Tol./	Level 1	Level 2	
Part Number	Value (Ohms)	Rating (mW)	(^)	Type (@)	Multiplier (#)	FRL (&)	FRL (&)	Manufacturer

RM1005 RESISTORS

DECADE BREAKDOWN

Click on the link below to see the associated parts selection listing:

Resistance Range
5.60 Ohms through 9.76 Ohms
10.0 Ohms through 97.6 Ohms
100 Ohms through 976 Ohms
1,000 Ohms through 9,760 Ohms
10,000 Ohms through 97,600 Ohms
100,000 Ohms through 1,000,000 Ohms

MIL-PRF-55342/3 (RM1005) Film Chip Resistors: 5.60 Ohms Through 9.76 Ohms

	Resistance	Power	Char.	Term.	Resistance Tol./	Level 1	Level 2	
Part Number	Value (Ohms)	Rating (mW)	(^)	Type (@)	Multiplier (#)	FRL (&)	FRL (&)	Manufacturer
M55342^03@5#60&	5.60	50 (char. E, H) or 100 (char. K, M)	E, H, K, M	B, C, W	G, J, M	S, T	P, R	DAL,MSI,SOA
M55342^03@5#62&	5.62	50 (char. E, H) or 100 (char. K, M)	E, H, K, M	B, C, W	D	S, T	P, R	DAL,MSI,SOA
M55342^03@5#76&	5.76	50 (char. E, H) or 100 (char. K, M)	E, H, K, M	B, C, W	D	S, T	P, R	DAL,MSI,SOA
M55342^03@5#90&	5.90	50 (char. E, H) or 100 (char. K, M)	E, H, K, M	B, C, W	D	S, T	P, R	DAL,MSI,SOA
M55342^03@6#04&	6.04	50 (char. E, H) or 100 (char. K, M)	E, H, K, M	B, C, W	D	S, T	P, R	DAL,MSI,SOA
M55342^03@6#19&	6.19	50 (char. E, H) or 100 (char. K, M)	E, H, K, M	B, C, W	D	S, T	P, R	DAL,MSI,SOA
M55342^03@6#20&	6.20	50 (char. E, H) or 100 (char. K, M)	E, H, K, M	B, C, W	G, J	S, T	P, R	DAL,MSI,SOA
M55342^03@6#34&	6.34	50 (char. E, H) or 100 (char. K, M)	E, H, K, M	B, C, W	D	S, T	P, R	DAL,MSI,SOA
	Resistance	Power	Char.	Term.	Resistance Tol./	Level 1	Level 2	
Part Number	Value (Ohms)	Rating (mW)	(^)	Type (@)	Multiplier (#)	FRL (&)	FRL (&)	Manufacturer
M55342^03@6#49&	6.49	50 (char. E, H) or 100 (char. K, M)	E, H, K, M	B, C, W	D	S, T	P, R	DAL,MSI,SOA
M55342^03@6#65&	6.65	50 (char. E, H) or 100 (char. K, M)	E, H, K, M	B, C, W	D	S, T	P, R	DAL,MSI,SOA
M55342^03@6#80&	6.80	50 (char. E, H) or 100 (char. K, M)	E, H, K, M	B, C, W	G, J, M	S, T	P, R	DAL,MSI,SOA
M55342^03@6#81&	6.81	50 (char. E, H) or 100 (char. K, M)	E, H, K, M	B, C, W	D	S, T	P, R	DAL,MSI,SOA
M55342^03@6#98&	6.98	50 (char. E, H) or 100 (char. K, M)	E, H, K, M	B, C, W	D	S, T	P, R	DAL,MSI,SOA
M55342^03@7#15&	7.15	50 (char. E, H) or 100 (char. K, M)	E, H, K, M	B, C, W	D	S, T	P, R	DAL,MSI,SOA
M55342^03@7#32&	7.32	50 (char. E, H) or 100 (char. K, M)	E, H, K, M	B, C, W	D	S, T	P, R	DAL,MSI,SOA
M55342^03@7#50&	7.50	50 (char. E, H) or 100 (char. K, M)	E, H, K, M	B, C, W	D, G, J	S, T	P, R	DAL,MSI,SOA
	Resistance	Power	Char.	Term.	Resistance Tol./	Level 1	Level 2	
Part Number	Value (Ohms)	Rating (mW)	(^)	Type (@)	Multiplier (#)	FRL (&)	FRL (&)	Manufacturer
M55342^03@7#68&	7.68	50 (char. E, H) or 100 (char. K, M)	E, H, K, M	B, C, W	D	S, T	P, R	DAL,MSI,SOA
M55342^03@7#87&	7.87	50 (char. E, H) or 100 (char. K, M)	E, H, K, M	B, C, W	D	S, T	P, R	DAL,MSI,SOA
M55342^03@8#06&	8.06	50 (char. E, H) or 100 (char. K, M)	E, H, K, M	B, C, W	D	S, T	P, R	DAL,MSI,SOA
M55342^03@8#20&	8.20	50 (char. E, H) or 100 (char. K, M)	E, H, K, M	B, C, W	G, J, M	S, T	P, R	DAL,MSI,SOA
M55342^03@8#25&	8.25	50 (char. E, H) or 100 (char. K, M)	E, H, K, M	B, C, W	D	S, T	P, R	DAL,MSI,SOA
M55342^03@8#45&	8.45	50 (char. E, H) or 100 (char. K, M)	E, H, K, M	B, C, W	D	S, T	P, R	DAL,MSI,SOA
M55342^03@8#66&	8.66	50 (char. E, H) or 100 (char. K, M)	E, H, K, M	B, C, W	D	S, T	P, R	DAL,MSI,SOA
M55342^03@8#87&	8.87	50 (char. E, H) or 100 (char. K, M)	E, H, K, M	B, C, W	D	S, T	P, R	DAL,MSI,SOA
M55342^03@9#09&	9.09	50 (char. E, H) or 100 (char. K, M)	E, H, K, M	B, C, W	D	S, T	P, R	DAL,MSI,SOA
	Resistance	Power	Char.	Term.	Resistance Tol./	Level 1	Level 2	
Part Number	Value (Ohms)	Rating (mW)	(^)	Type (@)	Multiplier (#)	FRL (&)	FRL (&)	Manufacturer
M55342^03@9#10&	9.10	50 (char. E, H) or 100 (char. K, M)	E, H, K, M	B, C, W	G, J	S, T	P, R	DAL,MSI,SOA
M55342^03@9#31&	9.31	50 (char. E, H) or 100 (char. K, M)	E, H, K, M	B, C, W	D	S, T	P, R	DAL,MSI,SOA
M55342^03@9#53&	9.53	50 (char. E, H) or 100 (char. K, M)	E, H, K, M	B, C, W	D	S, T	P, R	DAL,MSI,SOA
M55342^03@9#76&	9.76	50 (char. E, H) or 100 (char. K, M)	E, H, K, M	B, C, W	D	S, T	P, R	DAL,MSI,SOA
	Resistance	Power	Char.	Term.	Resistance Tol./	Level 1	Level 2	
Part Number	Value (Ohms)	Rating (mW)	(^)	Type (@)	Multiplier (#)	FRL (&)	FRL (&)	Manufacturer

MIL-PRF-55342/3 (RM1005) Film Chip Resistors: 10.0 Ohms Through 97.6 Ohms

	Resistance	Power	Char.	Term.	Resistance Tol./	Level 1	Level 2	
Part Number	Value (Ohms)	Rating (mW)	(^)	Type (@)	Multiplier (#)	FRL (&)	FRL (&)	Manufacturer
M55342^03@10#0&	10.0	50 (char. E, H) or 100 (char. K, M)	E, H, K, M	B, C, W	D, G, J, M	S, T	P, R	DAL,MSI,SOA

M55342^03@10#2&	10.2	50 (char. E, H) or 100 (char. K, M)	E, H, K, M	B, C, W	D	S, T	P, R	DAL,MSI,SOA
M55342^03@10#5&	10.5	50 (char. E, H) or 100 (char. K, M)	E, H, K, M	B, C, W	D	S, T	P, R	DAL,MSI,SOA
M55342^03@10#7&	10.7	50 (char. E, H) or 100 (char. K, M)	E, H, K, M	B, C, W	D	S, T	P, R	DAL,MSI,SOA
M55342^03@11#0&	11.0	50 (char. E, H) or 100 (char. K, M)	E, H, K, M	B, C, W	D, G, J	S, T	P, R	DAL,MSI,SOA
M55342^03@11#3&	11.3	50 (char. E, H) or 100 (char. K, M)	E, H, K, M	B, C, W	D	S, T	P, R	DAL,MSI,SOA
M55342^03@11#5&	11.5	50 (char. E, H) or 100 (char. K, M)	E, H, K, M	B, C, W	D	S, T	P, R	DAL,MSI,SOA
M55342^03@11#8&	11.8	50 (char. E, H) or 100 (char. K, M)	E, H, K, M	B, C, W	D	S, T	P, R	DAL,MSI,SOA
	Resistance	Power	Char.	Term.	Resistance Tol./	Level 1	Level 2	
Part Number	Value (Ohms)	Rating (mW)	(^)	Type (@)	Multiplier (#)	FRL (&)	FRL (&)	Manufacturer
M55342^03@12#0&	12.0	50 (char. E, H) or 100 (char. K, M)	E, H, K, M	B, C, W	G, J, M	S, T	P, R	DAL,MSI,SOA
M55342^03@12#1&	12.1	50 (char. E, H) or 100 (char. K, M)	E, H, K, M	B, C, W	D	S, T	P, R	DAL,MSI,SOA
M55342^03@12#4&	12.4	50 (char. E, H) or 100 (char. K, M)	E, H, K, M	B, C, W	D	S, T	P, R	DAL,MSI,SOA
M55342^03@12#7&	12.7	50 (char. E, H) or 100 (char. K, M)	E, H, K, M	B, C, W	D	S, T	P, R	DAL,MSI,SOA
M55342^03@13#0&	13.0	50 (char. E, H) or 100 (char. K, M)	E, H, K, M	B, C, W	D, G, J	S, T	P, R	DAL,MSI,SOA
M55342^03@13#3&	13.3	50 (char. E, H) or 100 (char. K, M)	E, H, K, M	B, C, W	D	S, T	P, R	DAL,MSI,SOA
M55342^03@13#7&	13.7	50 (char. E, H) or 100 (char. K, M)	E, H, K, M	B, C, W	D	S, T	P, R	DAL,MSI,SOA
M55342^03@14#0&	14.0	50 (char. E, H) or 100 (char. K, M)	E, H, K, M	B, C, W	D	S, T	P, R	DAL,MSI,SOA
	Resistance	Power	Char.	Term.	Resistance Tol./	Level 1	Level 2	
Part Number	Value (Ohms)	Rating (mW)	(^)	Type (@)	Multiplier (#)	FRL (&)	FRL (&)	Manufacturer
M55342^03@14#3&	14.3	50 (char. E, H) or 100 (char. K, M)	E, H, K, M	B, C, W	D	S, T	P, R	DAL,MSI,SOA
M55342^03@14#7&	14.7	50 (char. E, H) or 100 (char. K, M)	E, H, K, M	B, C, W	D	S, T	P, R	DAL,MSI,SOA
M55342^03@15#0&	15.0	50 (char. E, H) or 100 (char. K, M)	E, H, K, M	B, C, W	D, G, J, M	S, T	P, R	DAL,MSI,SOA
M55342^03@15#4&	15.4	50 (char. E, H) or 100 (char. K, M)	E, H, K, M	B, C, W	D	S, T	P, R	DAL,MSI,SOA
M55342^03@15#8&	15.8	50 (char. E, H) or 100 (char. K, M)	E, H, K, M	B, C, W	D	S, T	P, R	DAL,MSI,SOA
M55342^03@16#0&	16.0	50 (char. E, H) or 100 (char. K, M)	E, H, K, M	B, C, W	G, J	S, T	P, R	DAL,MSI,SOA
M55342^03@16#2&	16.2	50 (char. E, H) or 100 (char. K, M)	E, H, K, M	B, C, W	D	S, T	P, R	DAL,MSI,SOA
M55342^03@16#5&	16.5	50 (char. E, H) or 100 (char. K, M)	E, H, K, M	B, C, W	D	S, T	P, R	DAL,MSI,SOA
M55342^03@16#9&	16.9	50 (char. E, H) or 100 (char. K, M)	E, H, K, M	B, C, W	D	S, T	P, R	DAL,MSI,SOA
	Resistance	Power	Char.	Term.	Resistance Tol./	Level 1	Level 2	
Part Number	Value (Ohms)	Rating (mW)	(^)	Type (@)	Multiplier (#)	FRL (&)	FRL (&)	Manufacturer
M55342^03@17#4&	17.4	50 (char. E, H) or 100 (char. K, M)	E, H, K, M	B, C, W	D	S, T	P, R	DAL,MSI,SOA
M55342^03@17#8&	17.8	50 (char. E, H) or 100 (char. K, M)	E, H, K, M	B, C, W	D	S, T	P, R	DAL,MSI,SOA
M55342^03@18#0&	18.0	50 (char. E, H) or 100 (char. K, M)	E, H, K, M	B, C, W	G, J, M	S, T	P, R	DAL,MSI,SOA
M55342^03@18#2&	18.2	50 (char. E, H) or 100 (char. K, M)	E, H, K, M	B, C, W	D	S, T	P, R	DAL,MSI,SOA
M55342^03@18#7&	18.7	50 (char. E, H) or 100 (char. K, M)	E, H, K, M	B, C, W	D	S, T	P, R	DAL,MSI,SOA
M55342^03@19#1&	19.1	50 (char. E, H) or 100 (char. K, M)	E, H, K, M	B, C, W	D	S, T	P, R	DAL,MSI,SOA
M55342^03@19#6&	19.6	50 (char. E, H) or 100 (char. K, M)	E, H, K, M	B, C, W	D	S, T	P, R	DAL,MSI,SOA
M55342^03@20#0&	20.0	50 (char. E, H) or 100 (char. K, M)	E, H, K, M	B, C, W	D, G, J, M	S, T	P, R	DAL,MSI,OHM, SOA
M55342^03@20#5&	20.5	50 (char. E, H) or 100 (char. K, M)	E, H, K, M	B, C, W	D	S, T	P, R	DAL,MSI,OHM, SOA
	Resistance	Power	Char.	Term.	Resistance Tol./	Level 1	Level 2	
Part Number	Value (Ohms)	Rating (mW)	(^)	Type (@)	Multiplier (#)	FRL (&)	FRL (&)	Manufacturer
M55342^03@21#0&	21.0	50 (char. E, H) or 100 (char. K, M)	E, H, K, M	B, C, W	D	S, T	P, R	DAL,MSI,OHM, SOA
M55342^03@21#5&	21.5	50 (char. E, H) or 100 (char. K, M)	E, H, K, M	B, C, W	D	S, T	P, R	DAL,MSI,OHM, SOA
M55342^03@22#0&	22.0	50 (char. E, H) or 100 (char. K, M)	E, H, K, M	B, C, W	G, J, M	S, T	P, R	DAL,MSI,OHM, SOA
M55342^03@22#1&	22.1	50 (char. E, H) or 100 (char. K, M)	E, H, K, M	B, C, W	D	S, T	P, R	DAL,MSI,OHM, SOA
M55342^03@22#6&	22.6	50 (char. E, H) or 100 (char. K, M)	E, H, K, M	B, C, W	D	S, T	P, R	DAL,MSI,OHM, SOA
M55342^03@23#2&	23.2	50 (char. E, H) or 100 (char. K, M)	E, H, K, M	B, C, W	D	S, T	P, R	DAL,MSI,OHM, SOA

M55342^03@23#7&	23.7	50 (char. E, H) or 100 (char. K, M)	E, H, K, M	B, C, W	D	S, T	P, R	DAL,MSI,OHM, SOA
M55342^03@24#0&	24.0	50 (char. E, H) or 100 (char. K, M)	E, H, K, M	B, C, W	G, J	S, T	P, R	DAL,MSI,OHM, SOA
M55342^03@24#3&	24.3	50 (char. E, H) or 100 (char. K, M)	E, H, K, M	B, C, W	D	S, T	P, R	DAL,MSI,OHM, SOA
	Resistance	Power	Char.	Term.	Resistance Tol./	Level 1	Level 2	
Part Number	Value (Ohms)	Rating (mW)	(^)	Type (@)	Multiplier (#)	FRL (&)	FRL (&)	Manufacturer
M55342^03@24#9&	24.9	50 (char. E, H) or 100 (char. K, M)	E, H, K, M	B, C, W	D	S, T	P, R	DAL,MSI,OHM, SOA
M55342^03@25#5&	25.5	50 (char. E, H) or 100 (char. K, M)	E, H, K, M	B, C, W	D	S, T	P, R	DAL,MSI,OHM, SOA
M55342^03@26#1&	26.1	50 (char. E, H) or 100 (char. K, M)	E, H, K, M	B, C, W	D	S, T	P, R	DAL,MSI,OHM, SOA
M55342^03@26#7&	26.7	50 (char. E, H) or 100 (char. K, M)	E, H, K, M	B, C, W	D	S, T	P, R	DAL,MSI,OHM, SOA
M55342^03@27#0&	27.0	50 (char. E, H) or 100 (char. K, M)	E, H, K, M	B, C, W	G, J, M	S, T	P, R	DAL,MSI,OHM, SOA
M55342^03@27#4&	27.4	50 (char. E, H) or 100 (char. K, M)	E, H, K, M	B, C, W	D	S, T	P, R	DAL,MSI,OHM, SOA
M55342^03@28#0&	28.0	50 (char. E, H) or 100 (char. K, M)	E, H, K, M	B, C, W	D	S, T	P, R	DAL,MSI,OHM, SOA
M55342^03@28#7&	28.7	50 (char. E, H) or 100 (char. K, M)	E, H, K, M	B, C, W	D	S, T	P, R	DAL,MSI,OHM, SOA
M55342^03@29#4&	29.4	50 (char. E, H) or 100 (char. K, M)	E, H, K, M	B, C, W	D	S, T	P, R	DAL,MSI,OHM, SOA
	Resistance	Power	Char.	Term.	Resistance Tol./	Level 1	Level 2	
Part Number	Value (Ohms)	Rating (mW)	(^)	Type (@)	Multiplier (#)	FRL (&)	FRL (&)	Manufacturer
M55342^03@30#0&	30.0	50 (char. E, H) or 100 (char. K, M)	E, H, K, M	B, C, W	G, J	S, T	P, R	DAL,MSI,OHM, SOA
M55342^03@30#1&	30.1	50 (char. E, H) or 100 (char. K, M)	E, H, K, M	B, C, W	D	S, T	P, R	DAL,MSI,OHM, SOA
M55342^03@30#9&	30.9	50 (char. E, H) or 100 (char. K, M)	E, H, K, M	B, C, W	D	S, T	P, R	DAL,MSI,OHM, SOA
M55342^03@31#6&	31.6	50 (char. E, H) or 100 (char. K, M)	E, H, K, M	B, C, W	D	S, T	P, R	DAL,MSI,OHM, SOA
M55342^03@32#4&	32.4	50 (char. E, H) or 100 (char. K, M)	E, H, K, M	B, C, W	D	S, T	P, R	DAL,MSI,OHM, SOA
M55342^03@33#0&	33.0	50 (char. E, H) or 100 (char. K, M)	E, H, K, M	B, C, W	G, J, M	S, T	P, R	DAL,MSI,OHM, SOA
M55342^03@33#2&	33.2	50 (char. E, H) or 100 (char. K, M)	E, H, K, M	B, C, W	D	S, T	P, R	DAL,MSI,OHM, SOA
M55342^03@34#0&	34.0	50 (char. E, H) or 100 (char. K, M)	E, H, K, M	B, C, W	D	S, T	P, R	DAL,MSI,OHM, SOA
M55342^03@34#8&	34.8	50 (char. E, H) or 100 (char. K, M)	E, H, K, M	B, C, W	D	S, T	P, R	DAL,MSI,OHM, SOA
	Resistance	Power	Char.	Term.	Resistance Tol./	Level 1	Level 2	
Part Number	Value (Ohms)	Rating (mW)	(^)	Type (@)	Multiplier (#)	FRL (&)	FRL (&)	Manufacturer
M55342^03@35#7&	35.7	50 (char. E, H) or 100 (char. K, M)	E, H, K, M	B, C, W	D	S, T	P, R	DAL,MSI,OHM, SOA
M55342^03@36#0&	36.0	50 (char. E, H) or 100 (char. K, M)	E, H, K, M	B, C, W	G, J	S, T	P, R	DAL,MSI,OHM, SOA
M55342^03@36#5&	36.5	50 (char. E, H) or 100 (char. K, M)	E, H, K, M	B, C, W	D	S, T	P, R	DAL,MSI,OHM, SOA
M55342^03@37#4&	37.4	50 (char. E, H) or 100 (char. K, M)	E, H, K, M	B, C, W	D	S, T	P, R	DAL,MSI,OHM, SOA
M55342^03@38#3&	38.3	50 (char. E, H) or 100 (char. K, M)	E, H, K, M	B, C, W	D	S, T	P, R	DAL,MSI,OHM, SOA
M55342^03@39#0&	39.0	50 (char. E, H) or 100 (char. K, M)	E, H, K, M	B, C, W	G, J, M	S, T	P, R	DAL,MSI,OHM, SOA
M55342^03@39#2&	39.2	50 (char. E, H) or 100 (char. K, M)	E, H, K, M	B, C, W	D	S, T	P, R	DAL,MSI,OHM, SOA
M55342^03@40#2&	40.2	50 (char. E, H) or 100 (char. K, M)	E, H, K, M	B, C, W	D	S, T	P, R	DAL,MSI,OHM, SOA
M55342^03@41#2&	41.2	50 (char. E, H) or 100 (char. K, M)	E, H, K, M	B, C, W	D	S, T	P, R	DAL,MSI,OHM, SOA
	Resistance	Power	Char.	Term.	Resistance Tol./	Level 1	Level 2	
Part Number	Value (Ohms)	Rating (mW)	(^)	Type (@)	Multiplier (#)	FRL (&)	FRL (&)	Manufacturer
M55342^03@42#2&	42.2	50 (char. E, H) or 100 (char. K, M)	E, H, K, M	B, C, W	D	S, T	P, R	DAL,MSI,OHM, SOA
M55342^03@43#0&	43.0	50 (char. E, H) or 100 (char. K, M)	E, H, K, M	B, C, W	G, J	S, T	P, R	DAL,MSI,OHM, SOA
M55342^03@43#2&	43.2	50 (char. E, H) or 100 (char. K, M)	E, H, K, M	B, C, W	D	S, T	P, R	DAL,MSI,OHM, SOA
M55342^03@44#2&	44.2	50 (char. E, H) or 100 (char. K, M)	E, H, K, M	B, C, W	D	S, T	P, R	DAL,MSI,OHM, SOA
M55342^03@45#3&	45.3	50 (char. E, H) or 100 (char. K, M)	E, H, K, M	B, C, W	D	S, T	P, R	DAL,MSI,OHM, SOA
M55342^03@46#4&	46.4	50 (char. E, H) or 100 (char. K, M)	E, H, K, M	B, C, W	D	S, T	P, R	DAL,MSI,OHM, SOA
M55342^03@47#0&	47.0	50 (char. E, H) or 100 (char. K, M)	E, H, K, M	B, C, W	G, J, M	S, T	P, R	DAL,MSI,OHM, SOA
M55342^03@47#5&	47.5	50 (char. E, H) or 100 (char. K, M)	E, H, K, M	B, C, W	D	S, T	P, R	DAL,MSI,OHM, SOA
M55342^03@48#7&	48.7	50 (char. E, H) or 100 (char. K, M)	E, H, K, M	B, C, W	D	S, T	P, R	DAL,MSI,OHM, SOA

	Resistance	Power	Char.	Term.	Resistance Tol./	Level 1	Level 2	
Part Number	Value (Ohms)	Rating (mW)	(^)	Type (@)	Multiplier (#)	FRL (&)	FRL (&)	Manufacturer
M55342^03@49#9&	49.9	50 (char. E, H) or 100 (char. K, M)	E, H, K, M	B, C, W	D	S, T	P, R	DAL,MSI,OHM, SOA
M55342^03@51#0&	51.0	50 (char. E, H) or 100 (char. K, M)	E, H, K, M	B, C, W	G, J	S, T	P, R	DAL,MSI,OHM, SOA
M55342^03@51#1&	51.1	50 (char. E, H) or 100 (char. K, M)	E, H, K, M	B, C, W	D	S, T	P, R	DAL,MSI,OHM, SOA
M55342^03@52#3&	52.3	50 (char. E, H) or 100 (char. K, M)	E, H, K, M	B, C, W	D	S, T	P, R	DAL,MSI,OHM, SOA
M55342^03@53#6&	53.6	50 (char. E, H) or 100 (char. K, M)	E, H, K, M	B, C, W	D	S, T	P, R	DAL,MSI,OHM, SOA
M55342^03@54#9&	54.9	50 (char. E, H) or 100 (char. K, M)	E, H, K, M	B, C, W	D	S, T	P, R	DAL,MSI,OHM, SOA
M55342^03@56#0&	56.0	50 (char. E, H) or 100 (char. K, M)	E, H, K, M	B, C, W	G, J, M	S, T	P, R	DAL,MSI,OHM, SOA
M55342^03@56#2&	56.2	50 (char. E, H) or 100 (char. K, M)	E, H, K, M	B, C, W	D	S, T	P, R	DAL,MSI,OHM, SOA
M55342^03@57#6&	57.6	50 (char. E, H) or 100 (char. K, M)	E, H, K, M	B, C, W	D	S, T	P, R	DAL,MSI,OHM, SOA
	Resistance	Power	Char.	Term.	Resistance Tol./	Level 1	Level 2	
Part Number	Value (Ohms)	Rating (mW)	(^)	Type (@)	Multiplier (#)	FRL (&)	FRL (&)	Manufacturer
M55342^03@59#0&	59.0	50 (char. E, H) or 100 (char. K, M)	E, H, K, M	B, C, W	D	S, T	P, R	DAL,MSI,OHM, SOA
M55342^03@60#4&	60.4	50 (char. E, H) or 100 (char. K, M)	E, H, K, M	B, C, W	D	S, T	P, R	DAL,MSI,OHM, SOA
M55342^03@61#9&	61.9	50 (char. E, H) or 100 (char. K, M)	E, H, K, M	B, C, W	D	S, T	P, R	DAL,MSI,OHM, SOA
M55342^03@62#0&	62.0	50 (char. E, H) or 100 (char. K, M)	E, H, K, M	B, C, W	G, J	S, T	P, R	DAL,MSI,OHM, SOA
M55342^03@63#4&	63.4	50 (char. E, H) or 100 (char. K, M)	E, H, K, M	B, C, W	D	S, T	P, R	DAL,MSI,OHM, SOA
M55342^03@64#9&	64.9	50 (char. E, H) or 100 (char. K, M)	E, H, K, M	B, C, W	D	S, T	P, R	DAL,MSI,OHM, SOA
M55342^03@66#5&	66.5	50 (char. E, H) or 100 (char. K, M)	E, H, K, M	B, C, W	D	S, T	P, R	DAL,MSI,OHM, SOA
M55342^03@68#0&	68.0	50 (char. E, H) or 100 (char. K, M)	E, H, K, M	B, C, W	G, J, M	S, T	P, R	DAL,MSI,OHM, SOA
M55342^03@68#1&	68.1	50 (char. E, H) or 100 (char. K, M)	E, H, K, M	B, C, W	D	S, T	P, R	DAL,MSI,OHM, SOA
	Resistance	Power	Char.	Term.	Resistance Tol./	Level 1	Level 2	
Part Number	Value (Ohms)	Rating (mW)	(^)	Type (@)	Multiplier (#)	FRL (&)	FRL (&)	Manufacturer
M55342^03@69#8&	69.8	50 (char. E, H) or 100 (char. K, M)	E, H, K, M	B, C, W	D	S, T	P, R	DAL,MSI,OHM, SOA
M55342^03@71#5&	71.5	50 (char. E, H) or 100 (char. K, M)	E, H, K, M	B, C, W	D	S, T	P, R	DAL,MSI,OHM, SOA
M55342^03@73#2&	73.2	50 (char. E, H) or 100 (char. K, M)	E, H, K, M	B, C, W	D	S, T	P, R	DAL,MSI,OHM, SOA
M55342^03@75#0&	75.0	50 (char. E, H) or 100 (char. K, M)	E, H, K, M	B, C, W	D, G, J	S, T	P, R	DAL,MSI,OHM, SOA
M55342^03@76#8&	76.8	50 (char. E, H) or 100 (char. K, M)	E, H, K, M	B, C, W	D	S, T	P, R	DAL,MSI,OHM, SOA
M55342^03@78#7&	78.7	50 (char. E, H) or 100 (char. K, M)	E, H, K, M	B, C, W	D	S, T	P, R	DAL,MSI,OHM, SOA
M55342^03@80#6&	80.6	50 (char. E, H) or 100 (char. K, M)	E, H, K, M	B, C, W	D	S, T	P, R	DAL,MSI,OHM, SOA
M55342^03@82#0&	82.0	50 (char. E, H) or 100 (char. K, M)	E, H, K, M	B, C, W	G, J, M	S, T	P, R	DAL,MSI,OHM, SOA
M55342^03@82#5&	82.5	50 (char. E, H) or 100 (char. K, M)	E, H, K, M	B, C, W	D	S, T	P, R	DAL,MSI,OHM, SOA
	Resistance	Power	Char.	Term.	Resistance Tol./	Level 1	Level 2	
Part Number	Value (Ohms)	Rating (mW)	(^)	Type (@)	Multiplier (#)	FRL (&)	FRL (&)	Manufacturer
M55342^03@84#5&	84.5	50 (char. E, H) or 100 (char. K, M)	E, H, K, M	B, C, W	D	S, T	P, R	DAL,MSI,OHM, SOA
M55342^03@86#6&	86.6	50 (char. E, H) or 100 (char. K, M)	E, H, K, M	B, C, W	D	S, T	P, R	DAL,MSI,OHM, SOA
M55342^03@88#7&	88.7	50 (char. E, H) or 100 (char. K, M)	E, H, K, M	B, C, W	D	S, T	P, R	DAL,MSI,OHM, SOA
M55342^03@90#9&	90.9	50 (char. E, H) or 100 (char. K, M)	E, H, K, M	B, C, W	D	S, T	P, R	DAL,MSI,OHM, SOA
M55342^03@91#0&	91.0	50 (char. E, H) or 100 (char. K, M)	E, H, K, M	B, C, W	G, J	S, T	P, R	DAL,MSI,OHM, SOA
M55342^03@93#1&	93.1	50 (char. E, H) or 100 (char. K, M)	E, H, K, M	B, C, W	D	S, T	P, R	DAL,MSI,OHM, SOA
M55342^03@95#3&	95.3	50 (char. E, H) or 100 (char. K, M)	E, H, K, M	B, C, W	D	S, T	P, R	DAL,MSI,OHM, SOA
M55342^03@97#6&	97.6	50 (char. E, H) or 100 (char. K, M)	E, H, K, M	B, C, W	D	S, T	P, R	DAL,MSI,OHM, SOA
	Resistance	Power	Char.	Term.	Resistance Tol./	Level 1	Level 2	
Part Number	Value (Ohms)	Rating (mW)	(^)	Type (@)	Multiplier (#)	FRL (&)	FRL (&)	Manufacturer

	Resistance	Power	Char.	Term.	Resistance Tol./	Level 1	Level 2	
Part Number	Value (Ohms)	Rating (mW)	(^)	Type (@)	Multiplier (#)	FRL (&)	FRL (&)	Manufacturer
M55342^03@100#&	100	50 (char. E, H) or 100 (char. K, M)	E, H, K, M	B, C, W	D, G, J, M	S, T	P, R	DAL,MSI,OHM, SOA
M55342^03@102#&	102	50 (char. E, H) or 100 (char. K, M)	E, H, K, M	B, C, W	D	S, T	P, R	DAL,MSI,OHM, SOA
M55342^03@105#&	105	50 (char. E, H) or 100 (char. K, M)	E, H, K, M	B, C, W	D	S, T	P, R	DAL,MSI,OHM, SOA
M55342^03@107#&	107	50 (char. E, H) or 100 (char. K, M)	E, H, K, M	B, C, W	D	S, T	P, R	DAL,MSI,OHM, SOA
M55342^03@110#&	110	50 (char. E, H) or 100 (char. K, M)	E, H, K, M	B, C, W	D, G, J	S, T	P, R	DAL,MSI,OHM, SOA
M55342^03@113#&	113	50 (char. E, H) or 100 (char. K, M)	E, H, K, M	B, C, W	D	S, T	P, R	DAL,MSI,OHM, SOA
M55342^03@115#&	115	50 (char. E, H) or 100 (char. K, M)	E, H, K, M	B, C, W	D	S, T	P, R	DAL,MSI,OHM, SOA
M55342^03@118#&	118	50 (char. E, H) or 100 (char. K, M)	E, H, K, M	B, C, W	D	S, T	P, R	DAL,MSI,OHM, SOA
M55342^03@120#&	120	50 (char. E, H) or 100 (char. K, M)	E, H, K, M	B, C, W	G, J, M	S, T	P, R	DAL,MSI,OHM, SOA
	Resistance	Power	Char.	Term.	Resistance Tol./	Level 1	Level 2	
Part Number	Value (Ohms)	Rating (mW)	(^)	Type (@)	Multiplier (#)	FRL (&)	FRL (&)	Manufacturer
M55342^03@121#&	121	50 (char. E, H) or 100 (char. K, M)	E, H, K, M	B, C, W	D	S, T	P, R	DAL,MSI,OHM, SOA
M55342^03@124#&	124	50 (char. E, H) or 100 (char. K, M)	E, H, K, M	B, C, W	D	S, T	P, R	DAL,MSI,OHM, SOA
M55342^03@127#&	127	50 (char. E, H) or 100 (char. K, M)	E, H, K, M	B, C, W	D	S, T	P, R	DAL,MSI,OHM, SOA
M55342^03@130#&	130	50 (char. E, H) or 100 (char. K, M)	E, H, K, M	B, C, W	D, G, J	S, T	P, R	DAL,MSI,OHM, SOA
M55342^03@133#&	133	50 (char. E, H) or 100 (char. K, M)	E, H, K, M	B, C, W	D	S, T	P, R	DAL,MSI,OHM, SOA
M55342^03@137#&	137	50 (char. E, H) or 100 (char. K, M)	E, H, K, M	B, C, W	D	S, T	P, R	DAL,MSI,OHM, SOA
M55342^03@140#&	140	50 (char. E, H) or 100 (char. K, M)	E, H, K, M	B, C, W	D	S, T	P, R	DAL,MSI,OHM, SOA
M55342^03@143#&	143	50 (char. E, H) or 100 (char. K, M)	E, H, K, M	B, C, W	D	S, T	P, R	DAL,MSI,OHM, SOA
M55342^03@147#&	147	50 (char. E, H) or 100 (char. K, M)	E, H, K, M	B, C, W	D	S, T	P, R	DAL,MSI,OHM, SOA
	Resistance	Power	Char.	Term.	Resistance Tol./	Level 1	Level 2	
Part Number	Value (Ohms)	Rating (mW)	(^)	Type (@)	Multiplier (#)	FRL (&)	FRL (&)	Manufacturer
M55342^03@150#&	150	50 (char. E, H) or 100 (char. K, M)	E, H, K, M	B, C, W	D, G, J, M	S, T	P, R	DAL,MSI,OHM, SOA
M55342^03@154#&	154	50 (char. E, H) or 100 (char. K, M)	E, H, K, M	B, C, W	D	S, T	P, R	DAL,MSI,OHM, SOA
M55342^03@158#&	158	50 (char. E, H) or 100 (char. K, M)	E, H, K, M	B, C, W	D	S, T	P, R	DAL,MSI,OHM, SOA
M55342^03@160#&	160	50 (char. E, H) or 100 (char. K, M)	E, H, K, M	B, C, W	G, J	S, T	P, R	DAL,MSI,OHM, SOA
M55342^03@162#&	162	50 (char. E, H) or 100 (char. K, M)	E, H, K, M	B, C, W	D	S, T	P, R	DAL,MSI,OHM, SOA
M55342^03@165#&	165	50 (char. E, H) or 100 (char. K, M)	E, H, K, M	B, C, W	D	S, T	P, R	DAL,MSI,OHM, SOA
M55342^03@169#&	169	50 (char. E, H) or 100 (char. K, M)	E, H, K, M	B, C, W	D	S, T	P, R	DAL,MSI,OHM, SOA
M55342^03@174#&	174	50 (char. E, H) or 100 (char. K, M)	E, H, K, M	B, C, W	D	S, T	P, R	DAL,MSI,OHM, SOA
M55342^03@178#&	178	50 (char. E, H) or 100 (char. K, M)	E, H, K, M	B, C, W	D	S, T	P, R	DAL,MSI,OHM, SOA
	Resistance	Power	Char.	Term.	Resistance Tol./	Level 1	Level 2	
Part Number	Value (Ohms)	Rating (mW)	(^)	Type (@)	Multiplier (#)	FRL (&)	FRL (&)	Manufacturer
M55342^03@180#&	180	50 (char. E, H) or 100 (char. K, M)	E, H, K, M	B, C, W	G, J, M	S, T	P, R	DAL,MSI,OHM, SOA
M55342^03@182#&	182	50 (char. E, H) or 100 (char. K, M)	E, H, K, M	B, C, W	D	S, T	P, R	DAL,MSI,OHM, SOA
M55342^03@187#&	187	50 (char. E, H) or 100 (char. K, M)	E, H, K, M	B, C, W	D	S, T	P, R	DAL,MSI,OHM, SOA
M55342^03@191#&	191	50 (char. E, H) or 100 (char. K, M)	E, H, K, M	B, C, W	D	S, T	P, R	DAL,MSI,OHM, SOA
M55342^03@196#&	196	50 (char. E, H) or 100 (char. K, M)	E, H, K, M	B, C, W	D	S, T	P, R	DAL,MSI,OHM, SOA
M55342^03@200#&	200	50 (char. E, H) or 100 (char. K, M)	E, H, K, M	B, C, W	D, G, J, M	S, T	P, R	DAL,MSI,OHM, SOA
M55342^03@205#&	205	50 (char. E, H) or 100 (char. K, M)	E, H, K, M	B, C, W	D	S, T	P, R	DAL,MSI,OHM, SOA
M55342^03@210#&	210	50 (char. E, H) or 100 (char. K, M)	E, H, K, M	B, C, W	D	S, T	P, R	DAL,MSI,OHM, SOA
M55342^03@215#&	215	50 (char. E, H) or 100 (char. K, M)	E, H, K, M	B, C, W	D	S, T	P, R	DAL,MSI,OHM, SOA

	Resistance	Power	Char.	Term.	Resistance Tol./	Level 1	Level 2	
Part Number	Value (Ohms)	Rating (mW)	(^)	Type (@)	Multiplier (#)	FRL (&)	FRL (&)	Manufacturer
M55342^03@220#&	220	50 (char. E, H) or 100 (char. K, M)	E, H, K, M	B, C, W	G, J, M	S, T	P, R	DAL,MSI,OHM, SOA
M55342^03@221#&	221	50 (char. E, H) or 100 (char. K, M)	E, H, K, M	B, C, W	D	S, T	P, R	DAL,MSI,OHM, SOA
M55342^03@226#&	226	50 (char. E, H) or 100 (char. K, M)	E, H, K, M	B, C, W	D	S, T	P, R	DAL,MSI,OHM, SOA
M55342^03@232#&	232	50 (char. E, H) or 100 (char. K, M)	E, H, K, M	B, C, W	D	S, T	P, R	DAL,MSI,OHM, SOA
M55342^03@237#&	237	50 (char. E, H) or 100 (char. K, M)	E, H, K, M	B, C, W	D	S, T	P, R	DAL,MSI,OHM, SOA
M55342^03@240#&	240	50 (char. E, H) or 100 (char. K, M)	E, H, K, M	B, C, W	G, J	S, T	P, R	DAL,MSI,OHM, SOA
M55342^03@243#&	243	50 (char. E, H) or 100 (char. K, M)	E, H, K, M	B, C, W	D	S, T	P, R	DAL,MSI,OHM, SOA
M55342^03@249#&	249	50 (char. E, H) or 100 (char. K, M)	E, H, K, M	B, C, W	D	S, T	P, R	DAL,MSI,OHM, SOA
M55342^03@255#&	255	50 (char. E, H) or 100 (char. K, M)	E, H, K, M	B, C, W	D	S, T	P, R	DAL,MSI,OHM, SOA
	Resistance	Power	Char.	Term.	Resistance Tol./	Level 1	Level 2	
Part Number	Value (Ohms)	Rating (mW)	(^)	Type (@)	Multiplier (#)	FRL (&)	FRL (&)	Manufacturer
M55342^03@261#&	261	50 (char. E, H) or 100 (char. K, M)	E, H, K, M	B, C, W	D	S, T	P, R	DAL,MSI,OHM, SOA
M55342^03@267#&	267	50 (char. E, H) or 100 (char. K, M)	E, H, K, M	B, C, W	D	S, T	P, R	DAL,MSI,OHM, SOA
M55342^03@270#&	270	50 (char. E, H) or 100 (char. K, M)	E, H, K, M	B, C, W	G, J, M	S, T	P, R	DAL,MSI,OHM, SOA
M55342^03@274#&	274	50 (char. E, H) or 100 (char. K, M)	E, H, K, M	B, C, W	D	S, T	P, R	DAL,MSI,OHM, SOA
M55342^03@280#&	280	50 (char. E, H) or 100 (char. K, M)	E, H, K, M	B, C, W	D	S, T	P, R	DAL,MSI,OHM, SOA
M55342^03@287#&	287	50 (char. E, H) or 100 (char. K, M)	E, H, K, M	B, C, W	D	S, T	P, R	DAL,MSI,OHM, SOA
M55342^03@294#&	294	50 (char. E, H) or 100 (char. K, M)	E, H, K, M	B, C, W	D	S, T	P, R	DAL,MSI,OHM, SOA
M55342^03@300#&	300	50 (char. E, H) or 100 (char. K, M)	E, H, K, M	B, C, W	G, J	S, T	P, R	DAL,MSI,OHM, SOA
M55342^03@301#&	301	50 (char. E, H) or 100 (char. K, M)	E, H, K, M	B, C, W	D	S, T	P, R	DAL,MSI,OHM, SOA
	Resistance	Power	Char.	Term.	Resistance Tol./	Level 1	Level 2	
Part Number	Value (Ohms)	Rating (mW)	(^)	Type (@)	Multiplier (#)	FRL (&)	FRL (&)	Manufacturer
M55342^03@309#&	309	50 (char. E, H) or 100 (char. K, M)	E, H, K, M	B, C, W	D	S, T	P, R	DAL,MSI,OHM, SOA
M55342^03@316#&	316	50 (char. E, H) or 100 (char. K, M)	E, H, K, M	B, C, W	D	S, T	P, R	DAL,MSI,OHM, SOA
M55342^03@324#&	324	50 (char. E, H) or 100 (char. K, M)	E, H, K, M	B, C, W	D	S, T	P, R	DAL,MSI,OHM, SOA
M55342^03@330#&	330	50 (char. E, H) or 100 (char. K, M)	E, H, K, M	B, C, W	G, J, M	S, T	P, R	DAL,MSI,OHM, SOA
M55342^03@332#&	332	50 (char. E, H) or 100 (char. K, M)	E, H, K, M	B, C, W	D	S, T	P, R	DAL,MSI,OHM, SOA
M55342^03@340#&	340	50 (char. E, H) or 100 (char. K, M)	E, H, K, M	B, C, W	D	S, T	P, R	DAL,MSI,OHM, SOA
M55342^03@348#&	348	50 (char. E, H) or 100 (char. K, M)	E, H, K, M	B, C, W	D	S, T	P, R	DAL,MSI,OHM, SOA
M55342^03@357#&	357	50 (char. E, H) or 100 (char. K, M)	E, H, K, M	B, C, W	D	S, T	P, R	DAL,MSI,OHM, SOA
M55342^03@360#&	360	50 (char. E, H) or 100 (char. K, M)	E, H, K, M	B, C, W	G, J	S, T	P, R	DAL,MSI,OHM, SOA
	Resistance	Power	Char.	Term.	Resistance Tol./	Level 1	Level 2	
Part Number	Value (Ohms)	Rating (mW)	(^)	Type (@)	Multiplier (#)	FRL (&)	FRL (&)	Manufacturer
M55342^03@365#&	365	50 (char. E, H) or 100 (char. K, M)	E, H, K, M	B, C, W	D	S, T	P, R	DAL,MSI,OHM, SOA
M55342^03@374#&	374	50 (char. E, H) or 100 (char. K, M)	E, H, K, M	B, C, W	D	S, T	P, R	DAL,MSI,OHM, SOA
M55342^03@383#&	383	50 (char. E, H) or 100 (char. K, M)	E, H, K, M	B, C, W	D	S, T	P, R	DAL,MSI,OHM, SOA
M55342^03@390#&	390	50 (char. E, H) or 100 (char. K, M)	E, H, K, M	B, C, W	G, J, M	S, T	P, R	DAL,MSI,OHM, SOA
M55342^03@392#&	392	50 (char. E, H) or 100 (char. K, M)	E, H, K, M	B, C, W	D	S, T	P, R	DAL,MSI,OHM, SOA
M55342^03@402#&	402	50 (char. E, H) or 100 (char. K, M)	E, H, K, M	B, C, W	D	S, T	P, R	DAL,MSI,OHM, SOA
M55342^03@412#&	412	50 (char. E, H) or 100 (char. K, M)	E, H, K, M	B, C, W	D	S, T	P, R	DAL,MSI,OHM, SOA
M55342^03@422#&	422	50 (char. E, H) or 100 (char. K, M)	E, H, K, M	B, C, W	D	S, T	P, R	DAL,MSI,OHM, SOA
M55342^03@430#&	430	50 (char. E, H) or 100 (char. K, M)	E, H, K, M	B, C, W	G, J	S, T	P, R	DAL,MSI,OHM, SOA
	Resistance	Power	Char.	Term.	Resistance Tol./	Level 1	Level 2	
Part Number	Value (Ohms)	Rating (mW)	(^)	Type (@)	Multiplier (#)	FRL (&)	FRL (&)	Manufacturer
M55342^03@432#&	432	50 (char. E, H) or 100 (char. K, M)	E, H, K, M	B, C, W	D	S, T	P, R	DAL,MSI,OHM, SOA

M55342^03@442#&	442	50 (char. E, H) or 100 (char. K, M)	E, H, K, M	B, C, W	D	S, T	P, R	DAL,MSI,OHM, SOA
M55342^03@453#&	453	50 (char. E, H) or 100 (char. K, M)	E, H, K, M	B, C, W	D	S, T	P, R	DAL,MSI,OHM, SOA
M55342^03@464#&	464	50 (char. E, H) or 100 (char. K, M)	E, H, K, M	B, C, W	D	S, T	P, R	DAL,MSI,OHM, SOA
M55342^03@470#&	470	50 (char. E, H) or 100 (char. K, M)	E, H, K, M	B, C, W	G, J, M	S, T	P, R	DAL,MSI,OHM, SOA
M55342^03@475#&	475	50 (char. E, H) or 100 (char. K, M)	E, H, K, M	B, C, W	D	S, T	P, R	DAL,MSI,OHM, SOA
M55342^03@487#&	487	50 (char. E, H) or 100 (char. K, M)	E, H, K, M	B, C, W	D	S, T	P, R	DAL,MSI,OHM, SOA
M55342^03@499#&	499	50 (char. E, H) or 100 (char. K, M)	E, H, K, M	B, C, W	D	S, T	P, R	DAL,MSI,OHM, SOA
M55342^03@510#&	510	50 (char. E, H) or 100 (char. K, M)	E, H, K, M	B, C, W	G, J	S, T	P, R	DAL,MSI,OHM, SOA
	Resistance	Power	Char.	Term.	Resistance Tol./	Level 1	Level 2	
Part Number	Value (Ohms)	Rating (mW)	(^)	Type (@)	Multiplier (#)	FRL (&)	FRL (&)	Manufacturer
M55342^03@511#&	511	50 (char. E, H) or 100 (char. K, M)	E, H, K, M	B, C, W	D	S, T	P, R	DAL,MSI,OHM, SOA
M55342^03@523#&	523	50 (char. E, H) or 100 (char. K, M)	E, H, K, M	B, C, W	D	S, T	P, R	DAL,MSI,OHM, SOA
M55342^03@536#&	536	50 (char. E, H) or 100 (char. K, M)	E, H, K, M	B, C, W	D	S, T	P, R	DAL,MSI,OHM, SOA
M55342^03@549#&	549	50 (char. E, H) or 100 (char. K, M)	E, H, K, M	B, C, W	D	S, T	P, R	DAL,MSI,OHM, SOA
M55342^03@560#&	560	50 (char. E, H) or 100 (char. K, M)	E, H, K, M	B, C, W	G, J, M	S, T	P, R	DAL,MSI,OHM, SOA
M55342^03@562#&	562	50 (char. E, H) or 100 (char. K, M)	E, H, K, M	B, C, W	D	S, T	P, R	DAL,MSI,OHM, SOA
M55342^03@576#&	576	50 (char. E, H) or 100 (char. K, M)	E, H, K, M	B, C, W	D	S, T	P, R	DAL,MSI,OHM, SOA
M55342^03@590#&	590	50 (char. E, H) or 100 (char. K, M)	E, H, K, M	B, C, W	D	S, T	P, R	DAL,MSI,OHM, SOA
M55342^03@604#&	604	50 (char. E, H) or 100 (char. K, M)	E, H, K, M	B, C, W	D	S, T	P, R	DAL,MSI,OHM, SOA
	Resistance	Power	Char.	Term.	Resistance Tol./	Level 1	Level 2	
Part Number	Value (Ohms)	Rating (mW)	(^)	Type (@)	Multiplier (#)	FRL (&)	FRL (&)	Manufacturer
M55342^03@619#&	619	50 (char. E, H) or 100 (char. K, M)	E, H, K, M	B, C, W	D	S, T	P, R	DAL,MSI,OHM, SOA
M55342^03@620#&	620	50 (char. E, H) or 100 (char. K, M)	E, H, K, M	B, C, W	G, J	S, T	P, R	DAL,MSI,OHM, SOA
M55342^03@634#&	634	50 (char. E, H) or 100 (char. K, M)	E, H, K, M	B, C, W	D	S, T	P, R	DAL,MSI,OHM, SOA
M55342^03@649#&	649	50 (char. E, H) or 100 (char. K, M)	E, H, K, M	B, C, W	D	S, T	P, R	DAL,MSI,OHM, SOA
M55342^03@665#&	665	50 (char. E, H) or 100 (char. K, M)	E, H, K, M	B, C, W	D	S, T	P, R	DAL,MSI,OHM, SOA
M55342^03@680#&	680	50 (char. E, H) or 100 (char. K, M)	E, H, K, M	B, C, W	G, J, M	S, T	P, R	DAL,MSI,OHM, SOA
M55342^03@681#&	681	50 (char. E, H) or 100 (char. K, M)	E, H, K, M	B, C, W	D	S, T	P, R	DAL,MSI,OHM, SOA
M55342^03@698#&	698	50 (char. E, H) or 100 (char. K, M)	E, H, K, M	B, C, W	D	S, T	P, R	DAL,MSI,OHM, SOA
M55342^03@715#&	715	50 (char. E, H) or 100 (char. K, M)	E, H, K, M	B, C, W	D	S, T	P, R	DAL,MSI,OHM, SOA
	Resistance	Power	Char.	Term.	Resistance Tol./	Level 1	Level 2	
Part Number	Value (Ohms)	Rating (mW)	(^)	Type (@)	Multiplier (#)	FRL (&)	FRL (&)	Manufacturer
M55342^03@732#&	732	50 (char. E, H) or 100 (char. K, M)	E, H, K, M	B, C, W	D	S, T	P, R	DAL,MSI,OHM, SOA
M55342^03@750#&	750	50 (char. E, H) or 100 (char. K, M)	E, H, K, M	B, C, W	D, G, J	S, T	P, R	DAL,MSI,OHM, SOA
M55342^03@768#&	768	50 (char. E, H) or 100 (char. K, M)	E, H, K, M	B, C, W	D	S, T	P, R	DAL,MSI,OHM, SOA
M55342^03@787#&	787	50 (char. E, H) or 100 (char. K, M)	E, H, K, M	B, C, W	D	S, T	P, R	DAL,MSI,OHM, SOA
M55342^03@806#&	806	50 (char. E, H) or 100 (char. K, M)	E, H, K, M	B, C, W	D	S, T	P, R	DAL,MSI,OHM, SOA
M55342^03@820#&	820	50 (char. E, H) or 100 (char. K, M)	E, H, K, M	B, C, W	G, J, M	S, T	P, R	DAL,MSI,OHM, SOA
M55342^03@825#&	825	50 (char. E, H) or 100 (char. K, M)	E, H, K, M	B, C, W	D	S, T	P, R	DAL,MSI,OHM, SOA
M55342^03@845#&	845	50 (char. E, H) or 100 (char. K, M)	E, H, K, M	B, C, W	D	S, T	P, R	DAL,MSI,OHM, SOA
M55342^03@866#&	866	50 (char. E, H) or 100 (char. K, M)	E, H, K, M	B, C, W	D	S, T	P, R	DAL,MSI,OHM, SOA
	Resistance	Power	Char.	Term.	Resistance Tol./	Level 1	Level 2	
Part Number	Value (Ohms)	Rating (mW)	(^)	Type (@)	Multiplier (#)	FRL (&)	FRL (&)	Manufacturer
M55342^03@887#&	887	50 (char. E, H) or 100 (char. K, M)	E, H, K, M	B, C, W	D	S, T	P, R	DAL,MSI,OHM, SOA
M55342^03@909#&	909	50 (char. E, H) or 100 (char. K, M)	E, H, K, M	B, C, W	D	S, T	P, R	DAL,MSI,OHM, SOA
M55342^03@910#&	910	50 (char. E, H) or 100 (char. K, M)	E, H, K, M	B, C, W	G, J	S, T	P, R	DAL,MSI,OHM, SOA
M55342^03@931#&	931	50 (char. E, H) or 100 (char. K, M)	E, H, K, M	B, C, W	D	S, T	P, R	DAL,MSI,OHM, SOA

M55342^03@953#&	953	50 (char. E, H) or 100 (char. K, M)	E, H, K, M	B, C, W	D	S, T	P, R	DAL,MSI,OHM, SOA
M55342^03@976#&	976	50 (char. E, H) or 100 (char. K, M)	E, H, K, M	B, C, W	D	S, T	P, R	DAL,MSI,OHM, SOA
	Resistance	Power	Char.	Term.	Resistance Tol./	Level 1	Level 2	
Part Number	Value (Ohms)	Rating (mW)	(^)	Type (@)	Multiplier (#)	FRL (&)	FRL (&)	Manufacturer

MIL-PRF-55342/3 (RM1005) Film Chip Resistors: 1,000 Ohms Through 9,760 Ohms

	Resistance	Power	Char.	Term.	Resistance Tol./	Level 1	Level 2	
Part Number	Value (Ohms)	Rating (mW)	(^)	Type (@)	Multiplier (#)	FRL (&)	FRL (&)	Manufacturer
M55342^03@1#00&	1,000	50 (char. E, H) or 100 (char. K, M)	E, H, K, M	B, C, W	E, H, K, N	S, T	P, R	DAL,MSI,OHM, SOA
M55342^03@1#02&	1,020	50 (char. E, H) or 100 (char. K, M)	E, H, K, M	B, C, W	E	S, T	P, R	DAL,MSI,OHM, SOA
M55342^03@1#05&	1,050	50 (char. E, H) or 100 (char. K, M)	E, H, K, M	B, C, W	E	S, T	P, R	DAL,MSI,OHM, SOA
M55342^03@1#07&	1,070	50 (char. E, H) or 100 (char. K, M)	E, H, K, M	B, C, W	E	S, T	P, R	DAL,MSI,OHM, SOA
M55342^03@1#10&	1,100	50 (char. E, H) or 100 (char. K, M)	E, H, K, M	B, C, W	E, H, K	S, T	P, R	DAL,MSI,OHM, SOA
M55342^03@1#13&	1,130	50 (char. E, H) or 100 (char. K, M)	E, H, K, M	B, C, W	E	S, T	P, R	DAL,MSI,OHM, SOA
M55342^03@1#15&	1,150	50 (char. E, H) or 100 (char. K, M)	E, H, K, M	B, C, W	E	S, T	P, R	DAL,MSI,OHM, SOA
M55342^03@1#18&	1,180	50 (char. E, H) or 100 (char. K, M)	E, H, K, M	B, C, W	E	S, T	P, R	DAL,MSI,OHM, SOA
M55342^03@1#20&	1,200	50 (char. E, H) or 100 (char. K, M)	E, H, K, M	B, C, W	H, K, N	S, T	P, R	DAL,MSI,OHM, SOA
	Resistance	Power	Char.	Term.	Resistance Tol./	Level 1	Level 2	
Part Number	Value (Ohms)	Rating (mW)	(^)	Type (@)	Multiplier (#)	FRL (&)	FRL (&)	Manufacturer
M55342^03@1#21&	1,210	50 (char. E, H) or 100 (char. K, M)	E, H, K, M	B, C, W	E	S, T	P, R	DAL,MSI,OHM, SOA
M55342^03@1#24&	1,240	50 (char. E, H) or 100 (char. K, M)	E, H, K, M	B, C, W	E	S, T	P, R	DAL,MSI,OHM, SOA
M55342^03@1#27&	1,270	50 (char. E, H) or 100 (char. K, M)	E, H, K, M	B, C, W	E	S, T	P, R	DAL,MSI,OHM, SOA
M55342^03@1#30&	1,300	50 (char. E, H) or 100 (char. K, M)	E, H, K, M	B, C, W	E, H, K	S, T	P, R	DAL,MSI,OHM, SOA
M55342^03@1#33&	1,330	50 (char. E, H) or 100 (char. K, M)	E, H, K, M	B, C, W	E	S, T	P, R	DAL,MSI,OHM, SOA
M55342^03@1#37&	1,370	50 (char. E, H) or 100 (char. K, M)	E, H, K, M	B, C, W	E	S, T	P, R	DAL,MSI,OHM, SOA
M55342^03@1#40&	1,400	50 (char. E, H) or 100 (char. K, M)	E, H, K, M	B, C, W	E	S, T	P, R	DAL,MSI,OHM, SOA
M55342^03@1#43&	1,430	50 (char. E, H) or 100 (char. K, M)	E, H, K, M	B, C, W	E	S, T	P, R	DAL,MSI,OHM, SOA
M55342^03@1#47&	1,470	50 (char. E, H) or 100 (char. K, M)	E, H, K, M	B, C, W	E	S, T	P, R	DAL,MSI,OHM, SOA
	Resistance	Power	Char.	Term.	Resistance Tol./	Level 1	Level 2	
Part Number	Value (Ohms)	Rating (mW)	(^)	Type (@)	Multiplier (#)	FRL (&)	FRL (&)	Manufacturer
M55342^03@1#50&	1,500	50 (char. E, H) or 100 (char. K, M)	E, H, K, M	B, C, W	E, H, K, N	S, T	P, R	DAL,MSI,OHM, SOA
M55342^03@1#54&	1,540	50 (char. E, H) or 100 (char. K, M)	E, H, K, M	B, C, W	E	S, T	P, R	DAL,MSI,OHM, SOA
M55342^03@1#58&	1,580	50 (char. E, H) or 100 (char. K, M)	E, H, K, M	B, C, W	E	S, T	P, R	DAL,MSI,OHM, SOA
M55342^03@1#60&	1,600	50 (char. E, H) or 100 (char. K, M)	E, H, K, M	B, C, W	H, K	S, T	P, R	DAL,MSI,OHM, SOA
M55342^03@1#62&	1,620	50 (char. E, H) or 100 (char. K, M)	E, H, K, M	B, C, W	E	S, T	P, R	DAL,MSI,OHM, SOA
M55342^03@1#65&	1,650	50 (char. E, H) or 100 (char. K, M)	E, H, K, M	B, C, W	E	S, T	P, R	DAL,MSI,OHM, SOA
M55342^03@1#69&	1,690	50 (char. E, H) or 100 (char. K, M)	E, H, K, M	B, C, W	E	S, T	P, R	DAL,MSI,OHM, SOA
M55342^03@1#74&	1,740	50 (char. E, H) or 100 (char. K, M)	E, H, K, M	B, C, W	E	S, T	P, R	DAL,MSI,OHM, SOA
M55342^03@1#78&	1,780	50 (char. E, H) or 100 (char. K, M)	E, H, K, M	B, C, W	E	S, T	P, R	DAL,MSI,OHM, SOA
	Resistance	Power	Char.	Term.	Resistance Tol./	Level 1	Level 2	
Part Number	Value (Ohms)	Rating (mW)	(^)	Type (@)	Multiplier (#)	FRL (&)	FRL (&)	Manufacturer
M55342^03@1#80&	1,800	50 (char. E, H) or 100 (char. K, M)	E, H, K, M	B, C, W	H, K, N	S, T	P, R	DAL,MSI,OHM, SOA
M55342^03@1#82&	1,820	50 (char. E, H) or 100 (char. K, M)	E, H, K, M	B, C, W	E	S, T	P, R	DAL,MSI,OHM, SOA
M55342^03@1#87&	1,870	50 (char. E, H) or 100 (char. K, M)	E, H, K, M	B, C, W	E	S, T	P, R	DAL,MSI,OHM, SOA

M55342^03@1#91&	1,910	50 (char. E, H) or 100 (char. K, M)	E, H, K, M	B, C, W	E	S, T	P, R	DAL,MSI,OHM, SOA
M55342^03@1#96&	1,960	50 (char. E, H) or 100 (char. K, M)	E, H, K, M	B, C, W	E	S, T	P, R	DAL,MSI,OHM, SOA
M55342^03@2#00&	2,000	50 (char. E, H) or 100 (char. K, M)	E, H, K, M	B, C, W	E, H, K, N	S, T	P, R	DAL,MSI,OHM, SOA
M55342^03@2#05&	2,050	50 (char. E, H) or 100 (char. K, M)	E, H, K, M	B, C, W	E	S, T	P, R	DAL,MSI,OHM, SOA
M55342^03@2#10&	2,100	50 (char. E, H) or 100 (char. K, M)	E, H, K, M	B, C, W	E	S, T	P, R	DAL,MSI,OHM, SOA
M55342^03@2#15&	2,150	50 (char. E, H) or 100 (char. K, M)	E, H, K, M	B, C, W	E	S, T	P, R	DAL,MSI,OHM, SOA
	Resistance	Power	Char.	Term.	Resistance Tol./	Level 1	Level 2	
Part Number	Value (Ohms)	Rating (mW)	(^)	Type (@)	Multiplier (#)	FRL (&)	FRL (&)	Manufacturer
M55342^03@2#20&	2,200	50 (char. E, H) or 100 (char. K, M)	E, H, K, M	B, C, W	H, K, N	S, T	P, R	DAL,MSI,OHM, SOA
M55342^03@2#21&	2,210	50 (char. E, H) or 100 (char. K, M)	E, H, K, M	B, C, W	E	S, T	P, R	DAL,MSI,OHM, SOA
M55342^03@2#26&	2,260	50 (char. E, H) or 100 (char. K, M)	E, H, K, M	B, C, W	E	S, T	P, R	DAL,MSI,OHM, SOA
M55342^03@2#32&	2,320	50 (char. E, H) or 100 (char. K, M)	E, H, K, M	B, C, W	E	S, T	P, R	DAL,MSI,OHM, SOA
M55342^03@2#37&	2,370	50 (char. E, H) or 100 (char. K, M)	E, H, K, M	B, C, W	E	S, T	P, R	DAL,MSI,OHM, SOA
M55342^03@2#40&	2,400	50 (char. E, H) or 100 (char. K, M)	E, H, K, M	B, C, W	H, K	S, T	P, R	DAL,MSI,OHM, SOA
M55342^03@2#43&	2,430	50 (char. E, H) or 100 (char. K, M)	E, H, K, M	B, C, W	E	S, T	P, R	DAL,MSI,OHM, SOA
M55342^03@2#49&	2,490	50 (char. E, H) or 100 (char. K, M)	E, H, K, M	B, C, W	E	S, T	P, R	DAL,MSI,OHM, SOA
M55342^03@2#55&	2,550	50 (char. E, H) or 100 (char. K, M)	E, H, K, M	B, C, W	E	S, T	P, R	DAL,MSI,OHM, SOA
	Resistance	Power	Char.	Term.	Resistance Tol./	Level 1	Level 2	
Part Number	Value (Ohms)	Rating (mW)	(^)	Type (@)	Multiplier (#)	FRL (&)	FRL (&)	Manufacturer
M55342^03@2#61&	2,610	50 (char. E, H) or 100 (char. K, M)	E, H, K, M	B, C, W	E	S, T	P, R	DAL,MSI,OHM, SOA
M55342^03@2#67&	2,670	50 (char. E, H) or 100 (char. K, M)	E, H, K, M	B, C, W	E	S, T	P, R	DAL,MSI,OHM, SOA
M55342^03@2#70&	2,700	50 (char. E, H) or 100 (char. K, M)	E, H, K, M	B, C, W	H, K, N	S, T	P, R	DAL,MSI,OHM, SOA
M55342^03@2#74&	2,740	50 (char. E, H) or 100 (char. K, M)	E, H, K, M	B, C, W	E	S, T	P, R	DAL,MSI,OHM, SOA
M55342^03@2#80&	2,800	50 (char. E, H) or 100 (char. K, M)	E, H, K, M	B, C, W	E	S, T	P, R	DAL,MSI,OHM, SOA
M55342^03@2#87&	2,870	50 (char. E, H) or 100 (char. K, M)	E, H, K, M	B, C, W	E	S, T	P, R	DAL,MSI,OHM, SOA
M55342^03@2#94&	2,940	50 (char. E, H) or 100 (char. K, M)	E, H, K, M	B, C, W	E	S, T	P, R	DAL,MSI,OHM, SOA
M55342^03@3#00&	3,000	50 (char. E, H) or 100 (char. K, M)	E, H, K, M	B, C, W	H, K	S, T	P, R	DAL,MSI,OHM, SOA
M55342^03@3#01&	3,010	50 (char. E, H) or 100 (char. K, M)	E, H, K, M	B, C, W	E	S, T	P, R	DAL,MSI,OHM, SOA
	Resistance	Power	Char.	Term.	Resistance Tol./	Level 1	Level 2	
Part Number	Value (Ohms)	Rating (mW)	(^)	Type (@)	Multiplier (#)	FRL (&)	FRL (&)	Manufacturer
M55342^03@3#09&	3,090	50 (char. E, H) or 100 (char. K, M)	E, H, K, M	B, C, W	E	S, T	P, R	DAL,MSI,OHM, SOA
M55342^03@3#16&	3,160	50 (char. E, H) or 100 (char. K, M)	E, H, K, M	B, C, W	E	S, T	P, R	DAL,MSI,OHM, SOA
M55342^03@3#24&	3,240	50 (char. E, H) or 100 (char. K, M)	E, H, K, M	B, C, W	E	S, T	P, R	DAL,MSI,OHM, SOA
M55342^03@3#30&	3,300	50 (char. E, H) or 100 (char. K, M)	E, H, K, M	B, C, W	H, K, N	S, T	P, R	DAL,MSI,OHM, SOA
M55342^03@3#32&	3,320	50 (char. E, H) or 100 (char. K, M)	E, H, K, M	B, C, W	E	S, T	P, R	DAL,MSI,OHM, SOA
M55342^03@3#40&	3,400	50 (char. E, H) or 100 (char. K, M)	E, H, K, M	B, C, W	E	S, T	P, R	DAL,MSI,OHM, SOA
M55342^03@3#48&	3,480	50 (char. E, H) or 100 (char. K, M)	E, H, K, M	B, C, W	E	S, T	P, R	DAL,MSI,OHM, SOA
M55342^03@3#57&	3,570	50 (char. E, H) or 100 (char. K, M)	E, H, K, M	B, C, W	E	S, T	P, R	DAL,MSI,OHM, SOA
M55342^03@3#60&	3,600	50 (char. E, H) or 100 (char. K, M)	E, H, K, M	B, C, W	H, K	S, T	P, R	DAL,MSI,OHM, SOA
	Resistance	Power	Char.	Term.	Resistance Tol./	Level 1	Level 2	
Part Number	Value (Ohms)	Rating (mW)	(^)	Type (@)	Multiplier (#)	FRL (&)	FRL (&)	Manufacturer
M55342^03@3#65&	3,650	50 (char. E, H) or 100 (char. K, M)	E, H, K, M	B, C, W	E	S, T	P, R	DAL,MSI,OHM, SOA
M55342^03@3#74&	3,740	50 (char. E, H) or 100 (char. K, M)	E, H, K, M	B, C, W	E	S, T	P, R	DAL,MSI,OHM, SOA
M55342^03@3#83&	3,830	50 (char. E, H) or 100 (char. K, M)	E, H, K, M	B, C, W	E	S, T	P, R	DAL,MSI,OHM, SOA
M55342^03@3#90&	3,900	50 (char. E, H) or 100 (char. K, M)	E, H, K, M	B, C, W	H, K, N	S, T	P, R	DAL,MSI,OHM, SOA
M55342^03@3#92&	3,920	50 (char. E, H) or 100 (char. K, M)	E, H, K, M	B, C, W	E	S, T	P, R	DAL,MSI,OHM, SOA
M55342^03@4#02&	4,020	50 (char. E, H) or 100 (char. K, M)	E, H, K, M	B, C, W	E	S, T	P, R	DAL,MSI,OHM, SOA

M55342^03@4#12&	4,120	50 (char. E, H) or 100 (char. K, M)	E, H, K, M	B, C, W	E	S, T	P, R	DAL,MSI,OHM, SOA
M55342^03@4#22&	4,220	50 (char. E, H) or 100 (char. K, M)	E, H, K, M	B, C, W	E	S, T	P, R	DAL,MSI,OHM, SOA
M55342^03@4#30&	4,300	50 (char. E, H) or 100 (char. K, M)	E, H, K, M	B, C, W	H, K	S, T	P, R	DAL,MSI,OHM, SOA
	Resistance	Power	Char.	Term.	Resistance Tol./	Level 1	Level 2	
Part Number	Value (Ohms)	Rating (mW)	(^)	Type (@)	Multiplier (#)	FRL (&)	FRL (&)	Manufacturer
M55342^03@4#32&	4,320	50 (char. E, H) or 100 (char. K, M)	E, H, K, M	B, C, W	E	S, T	P, R	DAL,MSI,OHM, SOA
M55342^03@4#42&	4,420	50 (char. E, H) or 100 (char. K, M)	E, H, K, M	B, C, W	E	S, T	P, R	DAL,MSI,OHM, SOA
M55342^03@4#53&	4,530	50 (char. E, H) or 100 (char. K, M)	E, H, K, M	B, C, W	E	S, T	P, R	DAL,MSI,OHM, SOA
M55342^03@4#64&	4,640	50 (char. E, H) or 100 (char. K, M)	E, H, K, M	B, C, W	E	S, T	P, R	DAL,MSI,OHM, SOA
M55342^03@4#70&	4,700	50 (char. E, H) or 100 (char. K, M)	E, H, K, M	B, C, W	H, K, N	S, T	P, R	DAL,MSI,OHM, SOA
M55342^03@4#75&	4,750	50 (char. E, H) or 100 (char. K, M)	E, H, K, M	B, C, W	E	S, T	P, R	DAL,MSI,OHM, SOA
M55342^03@4#87&	4,870	50 (char. E, H) or 100 (char. K, M)	E, H, K, M	B, C, W	E	S, T	P, R	DAL,MSI,OHM, SOA
M55342^03@4#99&	4,990	50 (char. E, H) or 100 (char. K, M)	E, H, K, M	B, C, W	E	S, T	P, R	DAL,MSI,OHM, SOA
M55342^03@5#10&	5,100	50 (char. E, H) or 100 (char. K, M)	E, H, K, M	B, C, W	H, K	S, T	P, R	DAL,MSI,OHM, SOA
	Resistance	Power	Char.	Term.	Resistance Tol./	Level 1	Level 2	
Part Number	Value (Ohms)	Rating (mW)	(^)	Type (@)	Multiplier (#)	FRL (&)	FRL (&)	Manufacturer
M55342^03@5#11&	5,110	50 (char. E, H) or 100 (char. K, M)	E, H, K, M	B, C, W	E	S, T	P, R	DAL,MSI,OHM, SOA
M55342^03@5#23&	5,230	50 (char. E, H) or 100 (char. K, M)	E, H, K, M	B, C, W	E	S, T	P, R	DAL,MSI,OHM, SOA
M55342^03@5#36&	5,360	50 (char. E, H) or 100 (char. K, M)	E, H, K, M	B, C, W	E	S, T	P, R	DAL,MSI,OHM, SOA
M55342^03@5#49&	5,490	50 (char. E, H) or 100 (char. K, M)	E, H, K, M	B, C, W	E	S, T	P, R	DAL,MSI,OHM, SOA
M55342^03@5#60&	5,600	50 (char. E, H) or 100 (char. K, M)	E, H, K, M	B, C, W	H, K, N	S, T	P, R	DAL,MSI,OHM, SOA
M55342^03@5#62&	5,620	50 (char. E, H) or 100 (char. K, M)	E, H, K, M	B, C, W	E	S, T	P, R	DAL,MSI,OHM, SOA
M55342^03@5#76&	5,760	50 (char. E, H) or 100 (char. K, M)	E, H, K, M	B, C, W	E	S, T	P, R	DAL,MSI,OHM, SOA
M55342^03@5#90&	5,900	50 (char. E, H) or 100 (char. K, M)	E, H, K, M	B, C, W	E	S, T	P, R	DAL,MSI,OHM, SOA
M55342^03@6#04&	6,040	50 (char. E, H) or 100 (char. K, M)	E, H, K, M	B, C, W	E	S, T	P, R	DAL,MSI,OHM, SOA
	Resistance	Power	Char.	Term.	Resistance Tol./	Level 1	Level 2	
Part Number	Value (Ohms)	Rating (mW)	(^)	Type (@)	Multiplier (#)	FRL (&)	FRL (&)	Manufacturer
M55342^03@6#19&	6,190	50 (char. E, H) or 100 (char. K, M)	E, H, K, M	B, C, W	E	S, T	P, R	DAL,MSI,OHM, SOA
M55342^03@6#20&	6,200	50 (char. E, H) or 100 (char. K, M)	E, H, K, M	B, C, W	H, K	S, T	P, R	DAL,MSI,OHM, SOA
M55342^03@6#34&	6,340	50 (char. E, H) or 100 (char. K, M)	E, H, K, M	B, C, W	E	S, T	P, R	DAL,MSI,OHM, SOA
M55342^03@6#49&	6,490	50 (char. E, H) or 100 (char. K, M)	E, H, K, M	B, C, W	E	S, T	P, R	DAL,MSI,OHM, SOA
M55342^03@6#65&	6,650	50 (char. E, H) or 100 (char. K, M)	E, H, K, M	B, C, W	E	S, T	P, R	DAL,MSI,OHM, SOA
M55342^03@6#80&	6,800	50 (char. E, H) or 100 (char. K, M)	E, H, K, M	B, C, W	H, K, N	S, T	P, R	DAL,MSI,OHM, SOA
M55342^03@6#81&	6,810	50 (char. E, H) or 100 (char. K, M)	E, H, K, M	B, C, W	E	S, T	P, R	DAL,MSI,OHM, SOA
M55342^03@6#98&	6,980	50 (char. E, H) or 100 (char. K, M)	E, H, K, M	B, C, W	E	S, T	P, R	DAL,MSI,OHM, SOA
M55342^03@7#15&	7,150	50 (char. E, H) or 100 (char. K, M)	E, H, K, M	B, C, W	E	S, T	P, R	DAL,MSI,OHM, SOA
	Resistance	Power	Char.	Term.	Resistance Tol./	Level 1	Level 2	
Part Number	Value (Ohms)	Rating (mW)	(^)	Type (@)	Multiplier (#)	FRL (&)	FRL (&)	Manufacturer
M55342^03@7#32&	7,320	50 (char. E, H) or 100 (char. K, M)	E, H, K, M	B, C, W	E	S, T	P, R	DAL,MSI,OHM, SOA
M55342^03@7#50&	7,500	50 (char. E, H) or 100 (char. K, M)	E, H, K, M	B, C, W	E, H, K	S, T	P, R	DAL,MSI,OHM, SOA
M55342^03@7#68&	7,680	50 (char. E, H) or 100 (char. K, M)	E, H, K, M	B, C, W	E	S, T	P, R	DAL,MSI,OHM, SOA
M55342^03@7#87&	7,870	50 (char. E, H) or 100 (char. K, M)	E, H, K, M	B, C, W	E	S, T	P, R	DAL,MSI,OHM, SOA
M55342^03@8#06&	8,060	50 (char. E, H) or 100 (char. K, M)	E, H, K, M	B, C, W	E	S, T	P, R	DAL,MSI,OHM, SOA
M55342^03@8#20&	8,200	50 (char. E, H) or 100 (char. K, M)	E, H, K, M	B, C, W	H, K, N	S, T	P, R	DAL,MSI,OHM, SOA
M55342^03@8#25&	8,250	50 (char. E, H) or 100 (char. K, M)	E, H, K, M	B, C, W	E	S, T	P, R	DAL,MSI,OHM, SOA
M55342^03@8#45&	8,450	50 (char. E, H) or 100 (char. K, M)	E, H, K, M	B, C, W	E	S, T	P, R	DAL,MSI,OHM, SOA
M55342^03@8#66&	8,660	50 (char. E, H) or 100 (char. K, M)	E, H, K, M	B, C, W	E	S, T	P, R	DAL,MSI,OHM, SOA

	Resistance	Power	Char.	Term.	Resistance Tol./	Level 1	Level 2	
Part Number	Value (Ohms)	Rating (mW)	(^)	Type (@)	Multiplier (#)	FRL (&)	FRL (&)	Manufacturer
M55342^03@8#87&	8,870	50 (char. E, H) or 100 (char. K, M)	E, H, K, M	B, C, W	E	S, T	P, R	DAL,MSI,OHM, SOA
M55342^03@9#09&	9,090	50 (char. E, H) or 100 (char. K, M)	E, H, K, M	B, C, W	E	S, T	P, R	DAL,MSI,OHM, SOA
M55342^03@9#10&	9,100	50 (char. E, H) or 100 (char. K, M)	E, H, K, M	B, C, W	H, K	S, T	P, R	DAL,MSI,OHM, SOA
M55342^03@9#31&	9,310	50 (char. E, H) or 100 (char. K, M)	E, H, K, M	B, C, W	E	S, T	P, R	DAL,MSI,OHM, SOA
M55342^03@9#53&	9,530	50 (char. E, H) or 100 (char. K, M)	E, H, K, M	B, C, W	E	S, T	P, R	DAL,MSI,OHM, SOA
M55342^03@9#76&	9,760	50 (char. E, H) or 100 (char. K, M)	E, H, K, M	B, C, W	E	S, T	P, R	DAL,MSI,OHM, SOA
	Resistance	Power	Char.	Term.	Resistance Tol./	Level 1	Level 2	
Part Number	Value (Ohms)	Rating (mW)	(^)	Type (@)	Multiplier (#)	FRL (&)	FRL (&)	Manufacturer

MIL-PRF-55342/3 (RM1005) Film Chip Resistors: 10,000 Ohms Through 97,600 Ohms

	Resistance	Power	Char.	Term.	Resistance Tol./	Level 1	Level 2	
Part Number	Value (Ohms)	Rating (mW)	(^)	Type (@)	Multiplier (#)	FRL (&)	FRL (&)	Manufacturer
M55342^03@10#0&	10,000	50 (char. E, H) or 100 (char. K, M)	E, H, K, M	B, C, W	E, H, K, N	S, T	P, R	DAL,MSI,OHM, SOA
M55342^03@10#2&	10,200	50 (char. E, H) or 100 (char. K, M)	E, H, K, M	B, C, W	E	S, T	P, R	DAL,MSI,OHM, SOA
M55342^03@10#5&	10,500	50 (char. E, H) or 100 (char. K, M)	E, H, K, M	B, C, W	E	S, T	P, R	DAL,MSI,OHM, SOA
M55342^03@10#7&	10,700	50 (char. E, H) or 100 (char. K, M)	E, H, K, M	B, C, W	E	S, T	P, R	DAL,MSI,OHM, SOA
M55342^03@11#0&	11,000	50 (char. E, H) or 100 (char. K, M)	E, H, K, M	B, C, W	E, H, K	S, T	P, R	DAL,MSI,OHM, SOA
M55342^03@11#3&	11,300	50 (char. E, H) or 100 (char. K, M)	E, H, K, M	B, C, W	E	S, T	P, R	DAL,MSI,OHM, SOA
M55342^03@11#5&	11,500	50 (char. E, H) or 100 (char. K, M)	E, H, K, M	B, C, W	E	S, T	P, R	DAL,MSI,OHM, SOA
M55342^03@11#8&	11,800	50 (char. E, H) or 100 (char. K, M)	E, H, K, M	B, C, W	E	S, T	P, R	DAL,MSI,OHM, SOA
M55342^03@12#0&	12,000	50 (char. E, H) or 100 (char. K, M)	E, H, K, M	B, C, W	H, K, N	S, T	P, R	DAL,MSI,OHM, SOA
	Resistance	Power	Char.	Term.	Resistance Tol./	Level 1	Level 2	
Part Number	Value (Ohms)	Rating (mW)	(^)	Type (@)	Multiplier (#)	FRL (&)	FRL (&)	Manufacturer
M55342^03@12#1&	12,100	50 (char. E, H) or 100 (char. K, M)	E, H, K, M	B, C, W	E	S, T	P, R	DAL,MSI,OHM, SOA
M55342^03@12#4&	12,400	50 (char. E, H) or 100 (char. K, M)	E, H, K, M	B, C, W	E	S, T	P, R	DAL,MSI,OHM, SOA
M55342^03@12#7&	12,700	50 (char. E, H) or 100 (char. K, M)	E, H, K, M	B, C, W	E	S, T	P, R	DAL,MSI,OHM, SOA
M55342^03@13#0&	13,000	50 (char. E, H) or 100 (char. K, M)	E, H, K, M	B, C, W	E, H, K	S, T	P, R	DAL,MSI,OHM, SOA
M55342^03@13#3&	13,300	50 (char. E, H) or 100 (char. K, M)	E, H, K, M	B, C, W	E	S, T	P, R	DAL,MSI,OHM, SOA
M55342^03@13#7&	13,700	50 (char. E, H) or 100 (char. K, M)	E, H, K, M	B, C, W	E	S, T	P, R	DAL,MSI,OHM, SOA
M55342^03@14#0&	14,000	50 (char. E, H) or 100 (char. K, M)	E, H, K, M	B, C, W	E	S, T	P, R	DAL,MSI,OHM, SOA
M55342^03@14#3&	14,300	50 (char. E, H) or 100 (char. K, M)	E, H, K, M	B, C, W	E	S, T	P, R	DAL,MSI,OHM, SOA
M55342^03@14#7&	14,700	50 (char. E, H) or 100 (char. K, M)	E, H, K, M	B, C, W	E	S, T	P, R	DAL,MSI,OHM, SOA
	Resistance	Power	Char.	Term.	Resistance Tol./	Level 1	Level 2	
Part Number	Value (Ohms)	Rating (mW)	(^)	Type (@)	Multiplier (#)	FRL (&)	FRL (&)	Manufacturer
M55342^03@15#0&	15,000	50 (char. E, H) or 100 (char. K, M)	E, H, K, M	B, C, W	E, H, K, N	S, T	P, R	DAL,MSI,OHM, SOA
M55342^03@15#4&	15,400	50 (char. E, H) or 100 (char. K, M)	E, H, K, M	B, C, W	E	S, T	P, R	DAL,MSI,OHM, SOA
M55342^03@15#8&	15,800	50 (char. E, H) or 100 (char. K, M)	E, H, K, M	B, C, W	E	S, T	P, R	DAL,MSI,OHM, SOA
M55342^03@16#0&	16,000	50 (char. E, H) or 100 (char. K, M)	E, H, K, M	B, C, W	H, K	S, T	P, R	DAL,MSI,OHM, SOA
M55342^03@16#2&	16,200	50 (char. E, H) or 100 (char. K, M)	E, H, K, M	B, C, W	E	S, T	P, R	DAL,MSI,OHM, SOA
M55342^03@16#5&	16,500	50 (char. E, H) or 100 (char. K, M)	E, H, K, M	B, C, W	E	S, T	P, R	DAL,MSI,OHM, SOA
M55342^03@16#9&	16,900	50 (char. E, H) or 100 (char. K, M)	E, H, K, M	B, C, W	E	S, T	P, R	DAL,MSI,OHM, SOA
M55342^03@17#4&	17,400	50 (char. E, H) or 100 (char. K, M)	E, H, K, M	B, C, W	E	S, T	P, R	DAL,MSI,OHM, SOA

M55342^03@17#8&	17,800	50 (char. E, H) or 100 (char. K, M)	E, H, K, M	B, C, W	E	S, T	P, R	DAL,MSI,OHM, SOA
	Resistance	Power	Char.	Term.	Resistance Tol./	Level 1	Level 2	
Part Number	Value (Ohms)	Rating (mW)	(^)	Type (@)	Multiplier (#)	FRL (&)	FRL (&)	Manufacturer
M55342^03@18#0&	18,000	50 (char. E, H) or 100 (char. K, M)	E, H, K, M	B, C, W	H, K, N	S, T	P, R	DAL,MSI,OHM, SOA
M55342^03@18#2&	18,200	50 (char. E, H) or 100 (char. K, M)	E, H, K, M	B, C, W	E	S, T	P, R	DAL,MSI,OHM, SOA
M55342^03@18#7&	18,700	50 (char. E, H) or 100 (char. K, M)	E, H, K, M	B, C, W	E	S, T	P, R	DAL,MSI,OHM, SOA
M55342^03@19#1&	19,100	50 (char. E, H) or 100 (char. K, M)	E, H, K, M	B, C, W	E	S, T	P, R	DAL,MSI,OHM, SOA
M55342^03@19#6&	19,600	50 (char. E, H) or 100 (char. K, M)	E, H, K, M	B, C, W	E	S, T	P, R	DAL,MSI,OHM, SOA
M55342^03@20#0&	20,000	50 (char. E, H) or 100 (char. K, M)	E, H, K, M	B, C, W	E, H, K, N	S, T	P, R	DAL,MSI,OHM, SOA
M55342^03@20#5&	20,500	50 (char. E, H) or 100 (char. K, M)	E, H, K, M	B, C, W	E	S, T	P, R	DAL,MSI,OHM, SOA
M55342^03@21#0&	21,000	50 (char. E, H) or 100 (char. K, M)	E, H, K, M	B, C, W	E	S, T	P, R	DAL,MSI,OHM, SOA
M55342^03@21#5&	21,500	50 (char. E, H) or 100 (char. K, M)	E, H, K, M	B, C, W	E	S, T	P, R	DAL,MSI,OHM, SOA
	Resistance	Power	Char.	Term.	Resistance Tol./	Level 1	Level 2	
Part Number	Value (Ohms)	Rating (mW)	(^)	Type (@)	Multiplier (#)	FRL (&)	FRL (&)	Manufacturer
M55342^03@22#0&	22,000	50 (char. E, H) or 100 (char. K, M)	E, H, K, M	B, C, W	H, K, N	S, T	P, R	DAL,MSI,OHM, SOA
M55342^03@22#1&	22,100	50 (char. E, H) or 100 (char. K, M)	E, H, K, M	B, C, W	E	S, T	P, R	DAL,MSI,OHM, SOA
M55342^03@22#6&	22,600	50 (char. E, H) or 100 (char. K, M)	E, H, K, M	B, C, W	E	S, T	P, R	DAL,MSI,OHM, SOA
M55342^03@23#2&	23,200	50 (char. E, H) or 100 (char. K, M)	E, H, K, M	B, C, W	E	S, T	P, R	DAL,MSI,OHM, SOA
M55342^03@23#7&	23,700	50 (char. E, H) or 100 (char. K, M)	E, H, K, M	B, C, W	E	S, T	P, R	DAL,MSI,OHM, SOA
M55342^03@24#0&	24,000	50 (char. E, H) or 100 (char. K, M)	E, H, K, M	B, C, W	H, K	S, T	P, R	DAL,MSI,OHM, SOA
M55342^03@24#3&	24,300	50 (char. E, H) or 100 (char. K, M)	E, H, K, M	B, C, W	E	S, T	P, R	DAL,MSI,OHM, SOA
M55342^03@24#9&	24,900	50 (char. E, H) or 100 (char. K, M)	E, H, K, M	B, C, W	E	S, T	P, R	DAL,MSI,OHM, SOA
M55342^03@25#5&	25,500	50 (char. E, H) or 100 (char. K, M)	E, H, K, M	B, C, W	E	S, T	P, R	DAL,MSI,OHM, SOA
	Resistance	Power	Char.	Term.	Resistance Tol./	Level 1	Level 2	
Part Number	Value (Ohms)	Rating (mW)	(^)	Type (@)	Multiplier (#)	FRL (&)	FRL (&)	Manufacturer
M55342^03@26#1&	26,100	50 (char. E, H) or 100 (char. K, M)	E, H, K, M	B, C, W	E	S, T	P, R	DAL,MSI,OHM, SOA
M55342^03@26#7&	26,700	50 (char. E, H) or 100 (char. K, M)	E, H, K, M	B, C, W	E	S, T	P, R	DAL,MSI,OHM, SOA
M55342^03@27#0&	27,000	50 (char. E, H) or 100 (char. K, M)	E, H, K, M	B, C, W	H, K, N	S, T	P, R	DAL,MSI,OHM, SOA
M55342^03@27#4&	27,400	50 (char. E, H) or 100 (char. K, M)	E, H, K, M	B, C, W	E	S, T	P, R	DAL,MSI,OHM, SOA
M55342^03@28#0&	28,000	50 (char. E, H) or 100 (char. K, M)	E, H, K, M	B, C, W	E	S, T	P, R	DAL,MSI,OHM, SOA
M55342^03@28#7&	28,700	50 (char. E, H) or 100 (char. K, M)	E, H, K, M	B, C, W	E	S, T	P, R	DAL,MSI,OHM, SOA
M55342^03@29#4&	29,400	50 (char. E, H) or 100 (char. K, M)	E, H, K, M	B, C, W	E	S, T	P, R	DAL,MSI,OHM, SOA
M55342^03@30#0&	30,000	50 (char. E, H) or 100 (char. K, M)	E, H, K, M	B, C, W	H, K	S, T	P, R	DAL,MSI,OHM, SOA
M55342^03@30#1&	30,100	50 (char. E, H) or 100 (char. K, M)	E, H, K, M	B, C, W	E	S, T	P, R	DAL,MSI,OHM, SOA
	Resistance	Power	Char.	Term.	Resistance Tol./	Level 1	Level 2	
Part Number	Value (Ohms)	Rating (mW)	(^)	Type (@)	Multiplier (#)	FRL (&)	FRL (&)	Manufacturer
M55342^03@30#9&	30,900	50 (char. E, H) or 100 (char. K, M)	E, H, K, M	B, C, W	E	S, T	P, R	DAL,MSI,OHM, SOA
M55342^03@31#6&	31,600	50 (char. E, H) or 100 (char. K, M)	E, H, K, M	B, C, W	E	S, T	P, R	DAL,MSI,OHM, SOA
M55342^03@32#4&	32,400	50 (char. E, H) or 100 (char. K, M)	E, H, K, M	B, C, W	E	S, T	P, R	DAL,MSI,OHM, SOA
M55342^03@33#0&	33,000	50 (char. E, H) or 100 (char. K, M)	E, H, K, M	B, C, W	H, K, N	S, T	P, R	DAL,MSI,OHM, SOA
M55342^03@33#2&	33,200	50 (char. E, H) or 100 (char. K, M)	E, H, K, M	B, C, W	E	S, T	P, R	DAL,MSI,OHM, SOA
M55342^03@34#0&	34,000	50 (char. E, H) or 100 (char. K, M)	E, H, K, M	B, C, W	E	S, T	P, R	DAL,MSI,OHM, SOA
M55342^03@34#8&	34,800	50 (char. E, H) or 100 (char. K, M)	E, H, K, M	B, C, W	E	S, T	P, R	DAL,MSI,OHM, SOA
M55342^03@35#7&	35,700	50 (char. E, H) or 100 (char. K, M)	E, H, K, M	B, C, W	E	S, T	P, R	DAL,MSI,OHM, SOA
M55342^03@36#0&	36,000	50 (char. E, H) or 100 (char. K, M)	E, H, K, M	B, C, W	H, K	S, T	P, R	DAL,MSI,OHM, SOA
	Resistance	Power	Char.	Term.	Resistance Tol./	Level 1	Level 2	
Part Number	Value (Ohms)	Rating (mW)	(^)	Type (@)	Multiplier (#)	FRL (&)	FRL (&)	Manufacturer

M55342^03@36#5&	36,500	50 (char. E, H) or 100 (char. K, M)	E, H, K, M	B, C, W	E	S, T	P, R	DAL,MSI,OHM, SOA
M55342^03@37#4&	37,400	50 (char. E, H) or 100 (char. K, M)	E, H, K, M	B, C, W	E	S, T	P, R	DAL,MSI,OHM, SOA
M55342^03@38#3&	38,300	50 (char. E, H) or 100 (char. K, M)	E, H, K, M	B, C, W	E	S, T	P, R	DAL,MSI,OHM, SOA
M55342^03@39#0&	39,000	50 (char. E, H) or 100 (char. K, M)	E, H, K, M	B, C, W	H, K, N	S, T	P, R	DAL,MSI,OHM, SOA
M55342^03@39#2&	39,200	50 (char. E, H) or 100 (char. K, M)	E, H, K, M	B, C, W	E	S, T	P, R	DAL,MSI,OHM, SOA
M55342^03@40#2&	40,200	50 (char. E, H) or 100 (char. K, M)	E, H, K, M	B, C, W	E	S, T	P, R	DAL,MSI,OHM, SOA
M55342^03@41#2&	41,200	50 (char. E, H) or 100 (char. K, M)	E, H, K, M	B, C, W	E	S, T	P, R	DAL,MSI,OHM, SOA
M55342^03@42#2&	42,200	50 (char. E, H) or 100 (char. K, M)	E, H, K, M	B, C, W	E	S, T	P, R	DAL,MSI,OHM, SOA
M55342^03@43#0&	43,000	50 (char. E, H) or 100 (char. K, M)	E, H, K, M	B, C, W	H, K	S, T	P, R	DAL,MSI,OHM, SOA
	Resistance	Power	Char.	Term.	Resistance Tol./	Level 1	Level 2	
Part Number	Value (Ohms)	Rating (mW)	(^)	Type (@)	Multiplier (#)	FRL (&)	FRL (&)	Manufacturer
M55342^03@43#2&	43,200	50 (char. E, H) or 100 (char. K, M)	E, H, K, M	B, C, W	E	S, T	P, R	DAL,MSI,OHM, SOA
M55342^03@44#2&	44,200	50 (char. E, H) or 100 (char. K, M)	E, H, K, M	B, C, W	E	S, T	P, R	DAL,MSI,OHM, SOA
M55342^03@45#3&	45,300	50 (char. E, H) or 100 (char. K, M)	E, H, K, M	B, C, W	E	S, T	P, R	DAL,MSI,OHM, SOA
M55342^03@46#4&	46,400	50 (char. E, H) or 100 (char. K, M)	E, H, K, M	B, C, W	E	S, T	P, R	DAL,MSI,OHM, SOA
M55342^03@47#0&	47,000	50 (char. E, H) or 100 (char. K, M)	E, H, K, M	B, C, W	H, K, N	S, T	P, R	DAL,MSI,OHM, SOA
M55342^03@47#5&	47,500	50 (char. E, H) or 100 (char. K, M)	E, H, K, M	B, C, W	E	S, T	P, R	DAL,MSI,OHM, SOA
M55342^03@48#7&	48,700	50 (char. E, H) or 100 (char. K, M)	E, H, K, M	B, C, W	E	S, T	P, R	DAL,MSI,OHM, SOA
M55342^03@49#9&	49,900	50 (char. E, H) or 100 (char. K, M)	E, H, K, M	B, C, W	E	S, T	P, R	DAL,MSI,OHM, SOA
M55342^03@51#0&	51,000	50 (char. E, H) or 100 (char. K, M)	E, H, K, M	B, C, W	H, K	S, T	P, R	DAL,MSI,OHM, SOA
	Resistance	Power	Char.	Term.	Resistance Tol./	Level 1	Level 2	
Part Number	Value (Ohms)	Rating (mW)	(^)	Type (@)	Multiplier (#)	FRL (&)	FRL (&)	Manufacturer
M55342^03@51#1&	51,100	50 (char. E, H) or 100 (char. K, M)	E, H, K, M	B, C, W	E	S, T	P, R	DAL,MSI,OHM, SOA
M55342^03@52#3&	52,300	50 (char. E, H) or 100 (char. K, M)	E, H, K, M	B, C, W	E	S, T	P, R	DAL,MSI,OHM, SOA
M55342^03@53#6&	53,600	50 (char. E, H) or 100 (char. K, M)	E, H, K, M	B, C, W	E	S, T	P, R	DAL,MSI,OHM, SOA
M55342^03@54#9&	54,900	50 (char. E, H) or 100 (char. K, M)	E, H, K, M	B, C, W	E	S, T	P, R	DAL,MSI,OHM, SOA
M55342^03@56#0&	56,000	50 (char. E, H) or 100 (char. K, M)	E, H, K, M	B, C, W	H, K, N	S, T	P, R	DAL,MSI,OHM, SOA
M55342^03@56#2&	56,200	50 (char. E, H) or 100 (char. K, M)	E, H, K, M	B, C, W	E	S, T	P, R	DAL,MSI,OHM, SOA
M55342^03@57#6&	57,600	50 (char. E, H) or 100 (char. K, M)	E, H, K, M	B, C, W	E	S, T	P, R	DAL,MSI,OHM, SOA
M55342^03@59#0&	59,000	50 (char. E, H) or 100 (char. K, M)	E, H, K, M	B, C, W	E	S, T	P, R	DAL,MSI,OHM, SOA
M55342^03@60#4&	60,400	50 (char. E, H) or 100 (char. K, M)	E, H, K, M	B, C, W	E	S, T	P, R	DAL,MSI,OHM, SOA
	Resistance	Power	Char.	Term.	Resistance Tol./	Level 1	Level 2	
Part Number	Value (Ohms)	Rating (mW)	(^)	Type (@)	Multiplier (#)	FRL (&)	FRL (&)	Manufacturer
M55342^03@61#9&	61,900	50 (char. E, H) or 100 (char. K, M)	E, H, K, M	B, C, W	E	S, T	P, R	DAL,MSI,OHM, SOA
M55342^03@62#0&	62,000	50 (char. E, H) or 100 (char. K, M)	E, H, K, M	B, C, W	H, K	S, T	P, R	DAL,MSI,OHM, SOA
M55342^03@63#4&	63,400	50 (char. E, H) or 100 (char. K, M)	E, H, K, M	B, C, W	E	S, T	P, R	DAL,MSI,OHM, SOA
M55342^03@64#9&	64,900	50 (char. E, H) or 100 (char. K, M)	E, H, K, M	B, C, W	E	S, T	P, R	DAL,MSI,OHM, SOA
M55342^03@66#5&	66,500	50 (char. E, H) or 100 (char. K, M)	E, H, K, M	B, C, W	E	S, T	P, R	DAL,MSI,OHM, SOA
M55342^03@68#0&	68,000	50 (char. E, H) or 100 (char. K, M)	E, H, K, M	B, C, W	H, K, N	S, T	P, R	DAL,MSI,OHM, SOA
M55342^03@68#1&	68,100	50 (char. E, H) or 100 (char. K, M)	E, H, K, M	B, C, W	E	S, T	P, R	DAL,MSI,OHM, SOA
M55342^03@69#8&	69,800	50 (char. E, H) or 100 (char. K, M)	E, H, K, M	B, C, W	E	S, T	P, R	DAL,MSI,OHM, SOA
M55342^03@71#5&	71,500	50 (char. E, H) or 100 (char. K, M)	E, H, K, M	B, C, W	E	S, T	P, R	DAL,MSI,OHM, SOA
	Resistance	Power	Char.	Term.	Resistance Tol./	Level 1	Level 2	
Part Number	Value (Ohms)	Rating (mW)	(^)	Type (@)	Multiplier (#)	FRL (&)	FRL (&)	Manufacturer
M55342^03@73#2&	73,200	50 (char. E, H) or 100 (char. K, M)	E, H, K, M	B, C, W	E	S, T	P, R	DAL,MSI,OHM, SOA
M55342^03@75#0&	75,000	50 (char. E, H) or 100 (char. K, M)	E, H, K, M	B, C, W	E, H, K	S, T	P, R	DAL,MSI,OHM, SOA
M55342^03@76#8&	76,800	50 (char. E, H) or 100 (char. K, M)	E, H, K, M	B, C, W	E	S, T	P, R	DAL,MSI,OHM, SOA

M55342^03@78#7&	78,700	50 (char. E, H) or 100 (char. K, M)	E, H, K, M	B, C, W	E	S, T	P, R	DAL,MSI,OHM, SOA
M55342^03@80#6&	80,600	50 (char. E, H) or 100 (char. K, M)	E, H, K, M	B, C, W	E	S, T	P, R	DAL,MSI,OHM, SOA
M55342^03@82#0&	82,000	50 (char. E, H) or 100 (char. K, M)	E, H, K, M	B, C, W	H, K, N	S, T	P, R	DAL,MSI,OHM, SOA
M55342^03@82#5&	82,500	50 (char. E, H) or 100 (char. K, M)	E, H, K, M	B, C, W	E	S, T	P, R	DAL,MSI,OHM, SOA
M55342^03@84#5&	84,500	50 (char. E, H) or 100 (char. K, M)	E, H, K, M	B, C, W	E	S, T	P, R	DAL,MSI,OHM, SOA
M55342^03@86#6&	86,600	50 (char. E, H) or 100 (char. K, M)	E, H, K, M	B, C, W	E	S, T	P, R	DAL,MSI,OHM, SOA
	Resistance	Power	Char.	Term.	Resistance Tol./	Level 1	Level 2	
Part Number	Value (Ohms)	Rating (mW)	(^)	Type (@)	Multiplier (#)	FRL (&)	FRL (&)	Manufacturer
M55342^03@88#7&	88,700	50 (char. E, H) or 100 (char. K, M)	E, H, K, M	B, C, W	E	S, T	P, R	DAL,MSI,OHM, SOA
M55342^03@90#9&	90,900	50 (char. E, H) or 100 (char. K, M)	E, H, K, M	B, C, W	E	S, T	P, R	DAL,MSI,OHM, SOA
M55342^03@91#0&	91,000	50 (char. E, H) or 100 (char. K, M)	E, H, K, M	B, C, W	H, K	S, T	P, R	DAL,MSI,OHM, SOA
M55342^03@93#1&	93,100	50 (char. E, H) or 100 (char. K, M)	E, H, K, M	B, C, W	E	S, T	P, R	DAL,MSI,OHM, SOA
M55342^03@95#3&	95,300	50 (char. E, H) or 100 (char. K, M)	E, H, K, M	B, C, W	E	S, T	P, R	DAL,MSI,OHM, SOA
M55342^03@97#6&	97,600	50 (char. E, H) or 100 (char. K, M)	E, H, K, M	B, C, W	E	S, T	P, R	DAL,MSI,OHM, SOA
	Resistance	Power	Char.	Term.	Resistance Tol./	Level 1	Level 2	
Part Number	Value (Ohms)	Rating (mW)	(^)	Type (@)	Multiplier (#)	FRL (&)	FRL (&)	Manufacturer

MIL-PRF-55342/3 (RM1005) Film Chip Resistors: 100,000 Ohms Through 1,000,000 Ohms

	Resistance	Power	Char.	Term.	Resistance Tol./	Level 1	Level 2	
Part Number	Value (Ohms)	Rating (mW)	(^)	Type (@)	Multiplier (#)	FRL (&)	FRL (&)	Manufacturer
M55342^03@100#&	100,000	50 (char. E, H) or 100 (char. K, M)	E, H, K, M	B, C, W	E, H, K, N	S, T	P, R	DAL,MSI,OHM, SOA
M55342^03@102#&	102,000	50 (char. E, H) or 100 (char. K, M)	E, H, K, M	B, C, W	E	S, T	P, R	DAL,MSI,OHM, SOA
M55342^03@105#&	105,000	50 (char. E, H) or 100 (char. K, M)	E, H, K, M	B, C, W	E	S, T	P, R	DAL,MSI,OHM, SOA
M55342^03@107#&	107,000	50 (char. E, H) or 100 (char. K, M)	E, H, K, M	B, C, W	E	S, T	P, R	DAL,MSI,OHM, SOA
M55342^03@110#&	110,000	50 (char. E, H) or 100 (char. K, M)	E, H, K, M	B, C, W	E, H, K	S, T	P, R	DAL,MSI,OHM, SOA
M55342^03@113#&	113,000	50 (char. E, H) or 100 (char. K, M)	E, H, K, M	B, C, W	E	S, T	P, R	DAL,MSI,OHM, SOA
M55342^03@115#&	115,000	50 (char. E, H) or 100 (char. K, M)	E, H, K, M	B, C, W	E	S, T	P, R	DAL,MSI,OHM, SOA
M55342^03@118#&	118,000	50 (char. E, H) or 100 (char. K, M)	E, H, K, M	B, C, W	E	S, T	P, R	DAL,MSI,OHM, SOA
M55342^03@120#&	120,000	50 (char. E, H) or 100 (char. K, M)	E, H, K, M	B, C, W	H, K, N	S, T	P, R	DAL,MSI,OHM, SOA
M55342^03@121#&	121,000	50 (char. E, H) or 100 (char. K, M)	E, H, K, M	B, C, W	E	S, T	P, R	DAL,MSI,OHM, SOA
	Resistance	Power	Char.	Term.	Resistance Tol./	Level 1	Level 2	
Part Number	Value (Ohms)	Rating (mW)	(^)	Type (@)	Multiplier (#)	FRL (&)	FRL (&)	Manufacturer
M55342^03@124#&	124,000	50 (char. E, H) or 100 (char. K, M)	E, H, K, M	B, C, W	E	S, T	P, R	DAL,MSI,OHM, SOA
M55342^03@127#&	127,000	50 (char. E, H) or 100 (char. K, M)	E, H, K, M	B, C, W	E	S, T	P, R	DAL,MSI,OHM,SOA
M55342^03@130#&	130,000	50 (char. E, H) or 100 (char. K, M)	E, H, K, M	B, C, W	E, H, K	S, T	P, R	DAL,MSI,OHM,SOA
M55342^03@133#&	133,000	50 (char. E, H) or 100 (char. K, M)	E, H, K, M	B, C, W	E	S, T	P, R	DAL,MSI,OHM,SOA
M55342^03@137#&	137,000	50 (char. E, H) or 100 (char. K, M)	E, H, K, M	B, C, W	E	S, T	P, R	DAL,MSI,OHM,SOA
M55342^03@140#&	140,000	50 (char. E, H) or 100 (char. K, M)	E, H, K, M	B, C, W	E	S, T	P, R	DAL,MSI,OHM,SOA
M55342^03@143#&	143,000	50 (char. E, H) or 100 (char. K, M)	E, H, K, M	B, C, W	E	S, T	P, R	DAL,MSI,OHM,SOA
M55342^03@147#&	147,000	50 (char. E, H) or 100 (char. K, M)	E, H, K, M	B, C, W	E	S, T	P, R	DAL,MSI,OHM,SOA
M55342^03@150#&	150,000	50 (char. E, H) or 100 (char. K, M)	E, H, K, M	B, C, W	E, H, K, N	S, T	P, R	DAL,MSI,OHM,SOA
	Resistance	Power	Char.	Term.	Resistance Tol./	Level 1	Level 2	
Part Number	Value (Ohms)	Rating (mW)	(^)	Type (@)	Multiplier (#)	FRL (&)	FRL (&)	Manufacturer
M55342^03@154#&	154,000	50 (char. E, H) or 100 (char. K, M)	E, H, K, M	B, C, W	E	S, T	P, R	DAL,MSI,OHM,SOA

M55342^03@158#&	158,000	50 (char. E, H) or 100 (char. K, M)	E, H, K, M	B, C, W	E	S, T	P, R	DAL,MSI,OHM,SOA
M55342^03@160#&	160,000	50 (char. E, H) or 100 (char. K, M)	E, H, K, M	B, C, W	H, K	S, T	P, R	DAL,MSI,OHM,SOA
M55342^03@162#&	162,000	50 (char. E, H) or 100 (char. K, M)	E, H, K, M	B, C, W	E	S, T	P, R	DAL,MSI,OHM,SOA
M55342^03@165#&	165,000	50 (char. E, H) or 100 (char. K, M)	E, H, K, M	B, C, W	E	S, T	P, R	DAL,MSI,OHM,SOA
M55342^03@169#&	169,000	50 (char. E, H) or 100 (char. K, M)	E, H, K, M	B, C, W	E	S, T	P, R	DAL,MSI,OHM,SOA
M55342^03@174#&	174,000	50 (char. E, H) or 100 (char. K, M)	E, H, K, M	B, C, W	E	S, T	P, R	DAL,MSI,OHM,SOA
M55342^03@178#&	178,000	50 (char. E, H) or 100 (char. K, M)	E, H, K, M	B, C, W	E	S, T	P, R	DAL,MSI,OHM,SOA
M55342^03@180#&	180,000	50 (char. E, H) or 100 (char. K, M)	E, H, K, M	B, C, W	H, K, N	S, T	P, R	DAL,MSI,OHM,SOA
	Resistance	Power	Char.	Term.	Resistance Tol./	Level 1	Level 2	
Part Number	Value (Ohms)	Rating (mW)	(^)	Type (@)	Multiplier (#)	FRL (&)	FRL (&)	Manufacturer
M55342^03@182#&	182,000	50 (char. E, H) or 100 (char. K, M)	E, H, K, M	B, C, W	E	S, T	P, R	DAL,MSI,OHM,SOA
M55342^03@187#&	187,000	50 (char. E, H) or 100 (char. K, M)	E, H, K, M	B, C, W	E	S, T	P, R	DAL,MSI,OHM,SOA
M55342^03@191#&	191,000	50 (char. E, H) or 100 (char. K, M)	E, H, K, M	B, C, W	E	S, T	P, R	DAL,MSI,OHM,SOA
M55342^03@196#&	196,000	50 (char. E, H) or 100 (char. K, M)	E, H, K, M	B, C, W	E	S, T	P, R	DAL,MSI,OHM,SOA
M55342^03@200#&	200,000	50 (char. E, H) or 100 (char. K, M)	E, H, K, M	B, C, W	E, H, K, N	S, T	P, R	DAL,MSI,OHM,SOA
M55342^03@205#&	205,000	50 (char. E, H) or 100 (char. K, M)	E, H, K, M	B, C, W	E	S, T	P, R	DAL,MSI,OHM,SOA
M55342^03@210#&	210,000	50 (char. E, H) or 100 (char. K, M)	E, H, K, M	B, C, W	E	S, T	P, R	DAL,MSI,OHM,SOA
M55342^03@215#&	215,000	50 (char. E, H) or 100 (char. K, M)	E, H, K, M	B, C, W	E	S, T	P, R	DAL,MSI,OHM,SOA
M55342^03@220#&	220,000	50 (char. E, H) or 100 (char. K, M)	E, H, K, M	B, C, W	H, K, N	S, T	P, R	DAL,MSI,OHM,SOA
	Resistance	Power	Char.	Term.	Resistance Tol./	Level 1	Level 2	
Part Number	Value (Ohms)	Rating (mW)	(^)	Type (@)	Multiplier (#)	FRL (&)	FRL (&)	Manufacturer
M55342^03@221#&	221,000	50 (char. E, H) or 100 (char. K, M)	E, H, K, M	B, C, W	E	S, T	P, R	DAL,MSI,OHM,SOA
M55342^03@226#&	226,000	50 (char. E, H) or 100 (char. K, M)	E, H, K, M	B, C, W	E	S, T	P, R	DAL,MSI,OHM,SOA
M55342^03@232#&	232,000	50 (char. E, H) or 100 (char. K, M)	E, H, K, M	B, C, W	E	S, T	P, R	DAL,MSI,OHM,SOA
M55342^03@237#&	237,000	50 (char. E, H) or 100 (char. K, M)	E, H, K, M	B, C, W	E	S, T	P, R	DAL,MSI,OHM,SOA
M55342^03@240#&	240,000	50 (char. E, H) or 100 (char. K, M)	E, H, K, M	B, C, W	H, K	S, T	P, R	DAL,MSI,OHM,SOA
M55342^03@243#&	243,000	50 (char. E, H) or 100 (char. K, M)	E, H, K, M	B, C, W	E	S, T	P, R	DAL,MSI,OHM,SOA
M55342^03@249#&	249,000	50 (char. E, H) or 100 (char. K, M)	E, H, K, M	B, C, W	E	S, T	P, R	DAL,MSI,OHM,SOA
M55342^03@255#&	255,000	50 (char. E, H) or 100 (char. K, M)	E, H, K, M	B, C, W	E	S, T	P, R	DAL,MSI,OHM,SOA
M55342^03@261#&	261,000	50 (char. E, H) or 100 (char. K, M)	E, H, K, M	B, C, W	E	S, T	P, R	DAL,MSI,OHM,SOA
	Resistance	Power	Char.	Term.	Resistance Tol./	Level 1	Level 2	
Part Number	Value (Ohms)	Rating (mW)	(^)	Type (@)	Multiplier (#)	FRL (&)	FRL (&)	Manufacturer
M55342^03@267#&	267,000	50 (char. E, H) or 100 (char. K, M)	E, H, K, M	B, C, W	E	S, T	P, R	DAL,MSI,OHM,SOA
M55342^03@270#&	270,000	50 (char. E, H) or 100 (char. K, M)	E, H, K, M	B, C, W	H, K, N	S, T	P, R	DAL,MSI,OHM,SOA
M55342^03@274#&	274,000	50 (char. E, H) or 100 (char. K, M)	E, H, K, M	B, C, W	E	S, T	P, R	DAL,MSI,OHM,SOA
M55342^03@280#&	280,000	50 (char. E, H) or 100 (char. K, M)	E, H, K, M	B, C, W	E	S, T	P, R	DAL,MSI,OHM,SOA
M55342^03@287#&	287,000	50 (char. E, H) or 100 (char. K, M)	E, H, K, M	B, C, W	E	S, T	P, R	DAL,MSI,OHM,SOA
M55342^03@294#&	294,000	50 (char. E, H) or 100 (char. K, M)	E, H, K, M	B, C, W	E	S, T	P, R	DAL,MSI,OHM,SOA
M55342^03@300#&	300,000	50 (char. E, H) or 100 (char. K, M)	E, H, K, M	B, C, W	H, K	S, T	P, R	DAL,MSI,OHM,SOA
M55342^03@301#&	301,000	50 (char. E, H) or 100 (char. K, M)	E, H, K, M	B, C, W	E	S, T	P, R	DAL,MSI,OHM,SOA
M55342^03@309#&	309,000	50 (char. E, H) or 100 (char. K, M)	E, H, K, M	B, C, W	E	S, T	P, R	DAL,MSI,OHM,SOA
	Resistance	Power	Char.	Term.	Resistance Tol./	Level 1	Level 2	
Part Number	Value (Ohms)	Rating (mW)	(^)	Type (@)	Multiplier (#)	FRL (&)	FRL (&)	Manufacturer
M55342^03@316#&	316,000	50 (char. E, H) or 100 (char. K, M)	E, H, K, M	B, C, W	E	S, T	P, R	DAL,MSI,OHM,SOA
M55342^03@324#&	324,000	50 (char. E, H) or 100 (char. K, M)	E, H, K, M	B, C, W	E	S, T	P, R	DAL,MSI,OHM,SOA
M55342^03@330#&	330,000	50 (char. E, H) or 100 (char. K, M)	E, H, K, M	B, C, W	H, K, N	S, T	P, R	DAL,MSI,OHM,SOA
M55342^03@332#&	332,000	50 (char. E, H) or 100 (char. K, M)	E, H, K, M	B, C, W	E	S, T	P, R	DAL,MSI,OHM,SOA

M55342^03@340#&	340,000	50 (char. E, H) or 100 (char. K, M)	E, H, K, M	B, C, W	E	S, T	P, R	DAL,MSI,OHM,SOA
M55342^03@348#&	348,000	50 (char. E, H) or 100 (char. K, M)	E, H, K, M	B, C, W	E	S, T	P, R	DAL,MSI,OHM,SOA
M55342^03@357#&	357,000	50 (char. E, H) or 100 (char. K, M)	E, H, K, M	B, C, W	E	S, T	P, R	DAL,MSI,OHM,SOA
M55342^03@360#&	360,000	50 (char. E, H) or 100 (char. K, M)	E, H, K, M	B, C, W	H, K	S, T	P, R	DAL,MSI,OHM,SOA
M55342^03@365#&	365,000	50 (char. E, H) or 100 (char. K, M)	E, H, K, M	B, C, W	E	S, T	P, R	DAL,MSI,OHM,SOA
	Resistance	Power	Char.	Term.	Resistance Tol./	Level 1	Level 2	
Part Number	Value (Ohms)	Rating (mW)	(^)	Type (@)	Multiplier (#)	FRL (&)	FRL (&)	Manufacturer
M55342^03@374#&	374,000	50 (char. E, H) or 100 (char. K, M)	E, H, K, M	B, C, W	E	S, T	P, R	DAL,MSI,OHM,SOA
M55342^03@383#&	383,000	50 (char. E, H) or 100 (char. K, M)	E, H, K, M	B, C, W	E	S, T	P, R	DAL,MSI,OHM,SOA
M55342^03@390#&	390,000	50 (char. E, H) or 100 (char. K, M)	E, H, K, M	B, C, W	H, K, N	S, T	P, R	DAL,MSI,OHM,SOA
M55342^03@392#&	392,000	50 (char. E, H) or 100 (char. K, M)	E, H, K, M	B, C, W	E	S, T	P, R	DAL,MSI,OHM,SOA
M55342^03@402#&	402,000	50 (char. E, H) or 100 (char. K, M)	E, H, K, M	B, C, W	E	S, T	P, R	DAL,MSI,OHM,SOA
M55342^03@412#&	412,000	50 (char. E, H) or 100 (char. K, M)	E, H, K, M	B, C, W	E	S, T	P, R	DAL,MSI,OHM,SOA
M55342^03@422#&	422,000	50 (char. E, H) or 100 (char. K, M)	E, H, K, M	B, C, W	E	S, T	P, R	DAL,MSI,OHM,SOA
M55342^03@430#&	430,000	50 (char. E, H) or 100 (char. K, M)	E, H, K, M	B, C, W	H, K	S, T	P, R	DAL,MSI,OHM,SOA
M55342^03@432#&	432,000	50 (char. E, H) or 100 (char. K, M)	E, H, K, M	B, C, W	E	S, T	P, R	DAL,MSI,OHM,SOA
	Resistance	Power	Char.	Term.	Resistance Tol./	Level 1	Level 2	
Part Number	Value (Ohms)	Rating (mW)	(^)	Type (@)	Multiplier (#)	FRL (&)	FRL (&)	Manufacturer
M55342^03@442#&	442,000	50 (char. E, H) or 100 (char. K, M)	E, H, K, M	B, C, W	E	S, T	P, R	DAL,MSI,OHM,SOA
M55342^03@453#&	453,000	50 (char. E, H) or 100 (char. K, M)	E, H, K, M	B, C, W	E	S, T	P, R	DAL,MSI,OHM,SOA
M55342^03@464#&	464,000	50 (char. E, H) or 100 (char. K, M)	E, H, K, M	B, C, W	E	S, T	P, R	DAL,MSI,OHM,SOA
M55342^03@470#&	470,000	50 (char. E, H) or 100 (char. K, M)	E, H, K, M	B, C, W	H, K, N	S, T	P, R	DAL,MSI,OHM,SOA
M55342^03@475#&	475,000	50 (char. E, H) or 100 (char. K, M)	E, H, K, M	B, C, W	E	S, T	P, R	DAL,MSI,OHM,SOA
M55342^03@487#&	487,000	50 (char. E, H) or 100 (char. K, M)	E, H, K, M	B, C, W	E	S, T	P, R	DAL,MSI,OHM,SOA
M55342^03@499#&	499,000	50 (char. E, H) or 100 (char. K, M)	E, H, K, M	B, C, W	E	S, T	P, R	DAL,MSI,OHM,SOA
M55342^03@510#&	510,000	50 (char. E, H) or 100 (char. K, M)	E, H, K, M	B, C, W	H, K	S, T	P, R	DAL,MSI,OHM,SOA
M55342^03@511#&	511,000	50 (char. E, H) or 100 (char. K, M)	E, H, K, M	B, C, W	E	S, T	P, R	DAL,MSI,OHM,SOA
	Resistance	Power	Char.	Term.	Resistance Tol./	Level 1	Level 2	
Part Number	Value (Ohms)	Rating (mW)	(^)	Type (@)	Multiplier (#)	FRL (&)	FRL (&)	Manufacturer
M55342^03@523#&	523,000	50 (char. E, H) or 100 (char. K, M)	E, H, K, M	B, C, W	E	S, T	P, R	DAL,MSI,OHM,SOA
M55342^03@536#&	536,000	50 (char. E, H) or 100 (char. K, M)	E, H, K, M	B, C, W	E	S, T	P, R	DAL,MSI,OHM,SOA
M55342^03@549#&	549,000	50 (char. E, H) or 100 (char. K, M)	E, H, K, M	B, C, W	E	S, T	P, R	DAL,MSI,OHM,SOA
M55342^03@560#&	560,000	50 (char. E, H) or 100 (char. K, M)	E, H, K, M	B, C, W	H, K, N	S, T	P, R	DAL,MSI,OHM,SOA
M55342^03@562#&	562,000	50 (char. E, H) or 100 (char. K, M)	E, H, K, M	B, C, W	E	S, T	P, R	DAL,MSI,OHM,SOA
M55342^03@576#&	576,000	50 (char. E, H) or 100 (char. K, M)	E, H, K, M	B, C, W	E	S, T	P, R	DAL,MSI,OHM,SOA
M55342^03@590#&	590,000	50 (char. E, H) or 100 (char. K, M)	E, H, K, M	B, C, W	E	S, T	P, R	DAL,MSI,OHM,SOA
M55342^03@604#&	604,000	50 (char. E, H) or 100 (char. K, M)	E, H, K, M	B, C, W	E	S, T	P, R	DAL,MSI,OHM,SOA
M55342^03@619#&	619,000	50 (char. E, H) or 100 (char. K, M)	E, H, K, M	B, C, W	E	S, T	P, R	DAL,MSI,OHM,SOA
	Resistance	Power	Char.	Term.	Resistance Tol./	Level 1	Level 2	
Part Number	Value (Ohms)	Rating (mW)	(^)	Type (@)	Multiplier (#)	FRL (&)	FRL (&)	Manufacturer
M55342^03@620#&	620,000	50 (char. E, H) or 100 (char. K, M)	E, H, K, M	B, C, W	H, K	S, T	P, R	DAL,MSI,OHM,SOA
M55342^03@634#&	634,000	50 (char. E, H) or 100 (char. K, M)	E, H, K, M	B, C, W	E	S, T	P, R	DAL,MSI,OHM,SOA
M55342^03@649#&	649,000	50 (char. E, H) or 100 (char. K, M)	E, H, K, M	B, C, W	E	S, T	P, R	DAL,MSI,OHM,SOA
M55342^03@665#&	665,000	50 (char. E, H) or 100 (char. K, M)	E, H, K, M	B, C, W	E	S, T	P, R	DAL,MSI,SOA
M55342^03@680#&	680,000	50 (char. E, H) or 100 (char. K, M)	E, H, K, M	B, C, W	H, K, N	S, T	P, R	DAL,MSI,SOA
M55342^03@681#&	681,000	50 (char. E, H) or 100 (char. K, M)	E, H, K, M	B, C, W	E	S, T	P, R	DAL,MSI,SOA
M55342^03@698#&	698,000	50 (char. E, H) or 100 (char. K, M)	E, H, K, M	B, C, W	E	S, T	P, R	DAL,MSI,SOA

M55342^03@715#&	715,000	50 (char. E, H) or 100 (char. K, M)	E, H, K, M	B, C, W	E	S, T	P, R	DAL,MSI,SOA
M55342^03@732#&	732,000	50 (char. E, H) or 100 (char. K, M)	E, H, K, M	B, C, W	E	S, T	P, R	DAL,MSI,SOA
	Resistance	Power	Char.	Term.	Resistance Tol./	Level 1	Level 2	
Part Number	Value (Ohms)	Rating (mW)	(^)	Type (@)	Multiplier (#)	FRL (&)	FRL (&)	Manufacturer
M55342^03@750#&	750,000	50 (char. E, H) or 100 (char. K, M)	E, H, K, M	B, C, W	E, H, K	S, T	P, R	DAL,MSI,SOA
M55342^03@768#&	768,000	50 (char. E, H) or 100 (char. K, M)	E, H, K, M	B, C, W	E	S, T	P, R	DAL,MSI,SOA
M55342^03@787#&	787,000	50 (char. E, H) or 100 (char. K, M)	E, H, K, M	B, C, W	E	S, T	P, R	DAL,MSI,SOA
M55342^03@806#&	806,000	50 (char. E, H) or 100 (char. K, M)	E, H, K, M	B, C, W	E	S, T	P, R	DAL,MSI,SOA
M55342^03@820#&	820,000	50 (char. E, H) or 100 (char. K, M)	E, H, K, M	B, C, W	H, K, N	S, T	P, R	DAL,MSI,SOA
M55342^03@825#&	825,000	50 (char. E, H) or 100 (char. K, M)	E, H, K, M	B, C, W	E	S, T	P, R	DAL,MSI,SOA
M55342^03@845#&	845,000	50 (char. E, H) or 100 (char. K, M)	E, H, K, M	B, C, W	E	S, T	P, R	DAL,MSI,SOA
M55342^03@866#&	866,000	50 (char. E, H) or 100 (char. K, M)	E, H, K, M	B, C, W	E	S, T	P, R	DAL,MSI,SOA
M55342^03@887#&	887,000	50 (char. E, H) or 100 (char. K, M)	E, H, K, M	B, C, W	E	S, T	P, R	DAL,MSI,SOA
	Resistance	Power	Char.	Term.	Resistance Tol./	Level 1	Level 2	
Part Number	Value (Ohms)	Rating (mW)	(^)	Type (@)	Multiplier (#)	FRL (&)	FRL (&)	Manufacturer
M55342^03@909#&	909,000	50 (char. E, H) or 100 (char. K, M)	E, H, K, M	B, C, W	E	S, T	P, R	DAL,MSI,SOA
M55342^03@910#&	910,000	50 (char. E, H) or 100 (char. K, M)	E, H, K, M	B, C, W	H, K	S, T	P, R	DAL,MSI,SOA
M55342^03@931#&	931,000	50 (char. E, H) or 100 (char. K, M)	E, H, K, M	B, C, W	E	S, T	P, R	DAL,MSI,SOA
M55342^03@953#&	953,000	50 (char. E, H) or 100 (char. K, M)	E, H, K, M	B, C, W	E	S, T	P, R	DAL,MSI,SOA
M55342^03@976#&	976,000	50 (char. E, H) or 100 (char. K, M)	E, H, K, M	B, C, W	E	S, T	P, R	DAL,MSI,SOA
M55342^03@1#00&	1,000,000	50 (char. E, H) or 100 (char. K, M)	E, H, K, M	B, C, W	F, T, L, P	S, T	P, R	DAL,MSI,SOA
	Resistance	Power	Char.	Term.	Resistance Tol./	Level 1	Level 2	
Part Number	Value (Ohms)	Rating (mW)	(^)	Type (@)	Multiplier (#)	FRL (&)	FRL (&)	Manufacturer

MIL-PRF-55342/10 (RM1010) Film Chip Resistors

5.49 Ohms Through 5,620,000 Ohms

	Resistance	Power	Char.	Term.	Res. Tol./	Level 1	Level 2	
Part Number	Value (Ohms)	Rating (mW)	(^)	Type (@)	Multiplier (#)	FRL (&)	FRL (&)	Manufacturer
M55342^10@5#49&	5.49	250 (char. E, H) or 500 (char. K, M)	E, H, K, M	B, C, W	D	S	P, R	DAL
M55342^10@5#60&	5.60	250 (char. E, H) or 500 (char. K, M)	E, H, K, M	B, C, W	G, J, M	S	P, R	DAL,SOA
M55342^10@5#62&	5.62	250 (char. E, H) or 500 (char. K, M)	E, H, K, M	B, C, W	D	S	P, R	DAL,MSI,SOA
M55342^10@5#76&	5.76	250 (char. E, H) or 500 (char. K, M)	E, H, K, M	B, C, W	D	S	P, R	DAL,MSI,SOA
M55342^10@5#90&	5.90	250 (char. E, H) or 500 (char. K, M)	E, H, K, M	B, C, W	D	S	P, R	DAL,MSI,SOA
M55342^10@6#04&	6.04	250 (char. E, H) or 500 (char. K, M)	E, H, K, M	B, C, W	D	S	P, R	DAL,MSI,SOA
M55342^10@6#19&	6.19	250 (char. E, H) or 500 (char. K, M)	E, H, K, M	B, C, W	D	S	P, R	DAL,MSI,SOA
M55342^10@6#20&	6.20	250 (char. E, H) or 500 (char. K, M)	E, H, K, M	B, C, W	G, J	S	P, R	DAL,MSI,SOA
M55342^10@6#34&	6.34	250 (char. E, H) or 500 (char. K, M)	E, H, K, M	B, C, W	D	S	P, R	DAL,MSI,SOA
M55342^10@6#49&	6.49	250 (char. E, H) or 500 (char. K, M)	E, H, K, M	B, C, W	D	S	P, R	DAL,MSI,SOA
M55342^10@6#65&	6.65	250 (char. E, H) or 500 (char. K, M)	E, H, K, M	B, C, W	D	S	P, R	DAL,MSI,SOA
M55342^10@6#80&	6.80	250 (char. E, H) or 500 (char. K, M)	E, H, K, M	B, C, W	G, J, M	S	P, R	DAL,MSI,SOA
M55342^10@6#81&	6.81	250 (char. E, H) or 500 (char. K, M)	E, H, K, M	B, C, W	D	S	P, R	DAL,MSI,SOA
M55342^10@6#98&	6.98	250 (char. E, H) or 500 (char. K, M)	E, H, K, M	B, C, W	D	S	P, R	DAL,MSI,SOA
M55342^10@7#15&	7.15	250 (char. E, H) or 500 (char. K, M)	E, H, K, M	B, C, W	D	S	P, R	DAL,MSI,SOA
M55342^10@7#32&	7.32	250 (char. E, H) or 500 (char. K, M)	E, H, K, M	B, C, W	D	S	P, R	DAL,MSI,SOA

M55342^10@7#50&	7.50	250 (char. E, H) or 500 (char. K, M)	E, H, K, M	B, C, W	D, G, J	S	P, R	DAL,MSI,SOA
M55342^10@7#68&	7.68	250 (char. E, H) or 500 (char. K, M)	E, H, K, M	B, C, W	D	S	P, R	DAL,MSI,SOA
M55342^10@7#87&	7.87	250 (char. E, H) or 500 (char. K, M)	E, H, K, M	B, C, W	D	S	P, R	DAL,MSI,SOA
M55342^10@8#06&	8.06	250 (char. E, H) or 500 (char. K, M)	E, H, K, M	B, C, W	D	S	P, R	DAL,MSI,SOA
M55342^10@8#20&	8.20	250 (char. E, H) or 500 (char. K, M)	E, H, K, M	B, C, W	G, J, M	S	P, R	DAL,MSI,SOA
M55342^10@8#25&	8.25	250 (char. E, H) or 500 (char. K, M)	E, H, K, M	B, C, W	D	S	P, R	DAL,MSI,SOA
M55342^10@8#45&	8.45	250 (char. E, H) or 500 (char. K, M)	E, H, K, M	B, C, W	D	S	P, R	DAL,MSI,SOA
M55342^10@8#66&	8.66	250 (char. E, H) or 500 (char. K, M)	E, H, K, M	B, C, W	D	S	P, R	DAL,MSI,SOA
M55342^10@8#87&	8.87	250 (char. E, H) or 500 (char. K, M)	E, H, K, M	B, C, W	D	S	P, R	DAL,MSI,SOA
M55342^10@9#09&	9.09	250 (char. E, H) or 500 (char. K, M)	E, H, K, M	B, C, W	D	S	P, R	DAL,MSI,SOA
M55342^10@9#10&	9.10	250 (char. E, H) or 500 (char. K, M)	E, H, K, M	B, C, W	G, J	S	P, R	DAL,MSI,SOA
M55342^10@9#31&	9.31	250 (char. E, H) or 500 (char. K, M)	E, H, K, M	B, C, W	D	S	P, R	DAL,MSI,SOA
M55342^10@9#53&	9.53	250 (char. E, H) or 500 (char. K, M)	E, H, K, M	B, C, W	D	S	P, R	DAL,MSI,SOA
M55342^10@9#76&	9.76	250 (char. E, H) or 500 (char. K, M)	E, H, K, M	B, C, W	D	S	P, R	DAL,MSI,SOA
M55342^10@10#0&	10.0	250 (char. E, H) or 500 (char. K, M)	E, H, K, M	B, C, W	D, G, J, M	S	P, R	DAL,MSI,SOA
M55342^10@10#2&	10.2	250 (char. E, H) or 500 (char. K, M)	E, H, K, M	B, C, W	D	S	P, R	DAL,MSI,SOA
M55342^10@10#5&	10.5	250 (char. E, H) or 500 (char. K, M)	E, H, K, M	B, C, W	D	S	P, R	DAL,MSI,SOA
M55342^10@10#7&	10.7	250 (char. E, H) or 500 (char. K, M)	E, H, K, M	B, C, W	D	S	P, R	DAL,MSI,SOA
M55342^10@11#0&	11.0	250 (char. E, H) or 500 (char. K, M)	E, H, K, M	B, C, W	D, G, J	S	P, R	DAL,MSI,SOA
M55342^10@11#3&	11.3	250 (char. E, H) or 500 (char. K, M)	E, H, K, M	B, C, W	D	S	P, R	DAL,MSI,SOA
M55342^10@11#5&	11.5	250 (char. E, H) or 500 (char. K, M)	E, H, K, M	B, C, W	D	S	P, R	DAL,MSI,SOA
M55342^10@11#8&	11.8	250 (char. E, H) or 500 (char. K, M)	E, H, K, M	B, C, W	D	S	P, R	DAL,MSI,SOA
M55342^10@12#0&	12.0	250 (char. E, H) or 500 (char. K, M)	E, H, K, M	B, C, W	G, J, M	S	P, R	DAL,MSI,SOA
M55342^10@12#1&	12.1	250 (char. E, H) or 500 (char. K, M)	E, H, K, M	B, C, W	D	S	P, R	DAL,MSI,SOA
M55342^10@12#4&	12.4	250 (char. E, H) or 500 (char. K, M)	E, H, K, M	B, C, W	D	S	P, R	DAL,MSI,SOA
M55342^10@12#7&	12.7	250 (char. E, H) or 500 (char. K, M)	E, H, K, M	B, C, W	D	S	P, R	DAL,MSI,SOA
M55342^10@13#0&	13.0	250 (char. E, H) or 500 (char. K, M)	E, H, K, M	B, C, W	D, G, J	S	P, R	DAL,MSI,SOA
M55342^10@13#3&	13.3	250 (char. E, H) or 500 (char. K, M)	E, H, K, M	B, C, W	D	S	P, R	DAL,MSI,SOA
M55342^10@13#7&	13.7	250 (char. E, H) or 500 (char. K, M)	E, H, K, M	B, C, W	D	S	P, R	DAL,MSI,SOA
M55342^10@14#0&	14.0	250 (char. E, H) or 500 (char. K, M)	E, H, K, M	B, C, W	D	S	P, R	DAL,MSI,SOA
M55342^10@14#3&	14.3	250 (char. E, H) or 500 (char. K, M)	E, H, K, M	B, C, W	D	S	P, R	DAL,MSI,SOA
M55342^10@14#7&	14.7	250 (char. E, H) or 500 (char. K, M)	E, H, K, M	B, C, W	D	S	P, R	DAL,MSI,SOA
M55342^10@15#0&	15.0	250 (char. E, H) or 500 (char. K, M)	E, H, K, M	B, C, W	D, G, J, M	S	P, R	DAL,MSI,SOA
M55342^10@15#4&	15.4	250 (char. E, H) or 500 (char. K, M)	E, H, K, M	B, C, W	D	S	P, R	DAL,MSI,SOA
M55342^10@15#8&	15.8	250 (char. E, H) or 500 (char. K, M)	E, H, K, M	B, C, W	D	S	P, R	DAL,MSI,SOA
M55342^10@16#0&	16.0	250 (char. E, H) or 500 (char. K, M)	E, H, K, M	B, C, W	G, J	S	P, R	DAL,MSI,SOA
M55342^10@16#2&	16.2	250 (char. E, H) or 500 (char. K, M)	E, H, K, M	B, C, W	D	S	P, R	DAL,MSI,SOA
M55342^10@16#5&	16.5	250 (char. E, H) or 500 (char. K, M)	E, H, K, M	B, C, W	D	S	P, R	DAL,MSI,SOA
M55342^10@16#9&	16.9	250 (char. E, H) or 500 (char. K, M)	E, H, K, M	B, C, W	D	S	P, R	DAL,MSI,SOA
M55342^10@17#4&	17.4	250 (char. E, H) or 500 (char. K, M)	E, H, K, M	B, C, W	D	S	P, R	DAL,MSI,SOA
M55342^10@17#8&	17.8	250 (char. E, H) or 500 (char. K, M)	E, H, K, M	B, C, W	D	S	P, R	DAL,MSI,SOA
M55342^10@18#0&	18.0	250 (char. E, H) or 500 (char. K, M)	E, H, K, M	B, C, W	G, J, M	S	P, R	DAL,MSI,SOA
M55342^10@18#2&	18.2	250 (char. E, H) or 500 (char. K, M)	E, H, K, M	B, C, W	D	S	P, R	DAL,MSI,SOA
M55342^10@18#7&	18.7	250 (char. E, H) or 500 (char. K, M)	E, H, K, M	B, C, W	D	S	P, R	DAL,MSI,SOA
M55342^10@19#1&	19.1	250 (char. E, H) or 500 (char. K, M)	E, H, K, M	B, C, W	D	S	P, R	DAL,MSI,SOA
M55342^10@19#6&	19.6	250 (char. E, H) or 500 (char. K, M)	E, H, K, M	B, C, W	D	S	P, R	DAL,MSI,SOA
M55342^10@20#0&	20.0	250 (char. E, H) or 500 (char. K, M)	E, H, K, M	B, C, W	D, G, J, M	S	P, R	DAL,MSI,SOA

M55342^10@20#5&	20.5	250 (char. E, H) or 500 (char. K, M)	E, H, K, M	B, C, W	D	S	P, R	DAL,MSI,SOA
M55342^10@21#0&	21.0	250 (char. E, H) or 500 (char. K, M)	E, H, K, M	B, C, W	D	S	P, R	DAL,MSI,SOA
M55342^10@21#5&	21.5	250 (char. E, H) or 500 (char. K, M)	E, H, K, M	B, C, W	D	S	P, R	DAL,MSI,SOA
M55342^10@22#0&	22.0	250 (char. E, H) or 500 (char. K, M)	E, H, K, M	B, C, W	G, J, M	S	P, R	DAL,MSI,SOA
M55342^10@22#1&	22.1	250 (char. E, H) or 500 (char. K, M)	E, H, K, M	B, C, W	D	S	P, R	DAL,MSI,SOA
M55342^10@22#6&	22.6	250 (char. E, H) or 500 (char. K, M)	E, H, K, M	B, C, W	D	S	P, R	DAL,MSI,SOA
M55342^10@23#2&	23.2	250 (char. E, H) or 500 (char. K, M)	E, H, K, M	B, C, W	D	S	P, R	DAL,MSI,SOA
M55342^10@23#7&	23.7	250 (char. E, H) or 500 (char. K, M)	E, H, K, M	B, C, W	D	S	P, R	DAL,MSI,SOA
M55342^10@24#0&	24.0	250 (char. E, H) or 500 (char. K, M)	E, H, K, M	B, C, W	G, J	S	P, R	DAL,MSI,SOA
M55342^10@24#3&	24.3	250 (char. E, H) or 500 (char. K, M)	E, H, K, M	B, C, W	D	S	P, R	DAL,MSI,SOA
M55342^10@24#9&	24.9	250 (char. E, H) or 500 (char. K, M)	E, H, K, M	B, C, W	D	S	P, R	DAL,MSI,SOA
M55342^10@25#5&	25.5	250 (char. E, H) or 500 (char. K, M)	E, H, K, M	B, C, W	D	S	P, R	DAL,MSI,SOA
M55342^10@26#1&	26.1	250 (char. E, H) or 500 (char. K, M)	E, H, K, M	B, C, W	D	S	P, R	DAL,MSI,SOA
M55342^10@26#7&	26.7	250 (char. E, H) or 500 (char. K, M)	E, H, K, M	B, C, W	D	S	P, R	DAL,MSI,SOA
M55342^10@27#0&	27.0	250 (char. E, H) or 500 (char. K, M)	E, H, K, M	B, C, W	G, J, M	S	P, R	DAL,MSI,SOA
M55342^10@27#4&	27.4	250 (char. E, H) or 500 (char. K, M)	E, H, K, M	B, C, W	D	S	P, R	DAL,MSI,SOA
M55342^10@28#0&	28.0	250 (char. E, H) or 500 (char. K, M)	E, H, K, M	B, C, W	D	S	P, R	DAL,MSI,SOA
M55342^10@28#7&	28.7	250 (char. E, H) or 500 (char. K, M)	E, H, K, M	B, C, W	D	S	P, R	DAL,MSI,SOA
M55342^10@29#4&	29.4	250 (char. E, H) or 500 (char. K, M)	E, H, K, M	B, C, W	D	S	P, R	DAL,MSI,SOA
M55342^10@30#0&	30.0	250 (char. E, H) or 500 (char. K, M)	E, H, K, M	B, C, W	G, J	S	P, R	DAL,MSI,SOA
M55342^10@30#1&	30.1	250 (char. E, H) or 500 (char. K, M)	E, H, K, M	B, C, W	D	S	P, R	DAL,MSI,SOA
M55342^10@30#9&	30.9	250 (char. E, H) or 500 (char. K, M)	E, H, K, M	B, C, W	D	S	P, R	DAL,MSI,SOA
M55342^10@31#6&	31.6	250 (char. E, H) or 500 (char. K, M)	E, H, K, M	B, C, W	D	S	P, R	DAL,MSI,SOA
M55342^10@32#4&	32.4	250 (char. E, H) or 500 (char. K, M)	E, H, K, M	B, C, W	D	S	P, R	DAL,MSI,SOA
M55342^10@33#0&	33.0	250 (char. E, H) or 500 (char. K, M)	E, H, K, M	B, C, W	G, J, M	S	P, R	DAL,MSI,SOA
M55342^10@33#2&	33.2	250 (char. E, H) or 500 (char. K, M)	E, H, K, M	B, C, W	D	S	P, R	DAL,MSI,SOA
M55342^10@34#0&	34.0	250 (char. E, H) or 500 (char. K, M)	E, H, K, M	B, C, W	D	S	P, R	DAL,MSI,SOA
M55342^10@34#8&	34.8	250 (char. E, H) or 500 (char. K, M)	E, H, K, M	B, C, W	D	S	P, R	DAL,MSI,SOA
M55342^10@35#7&	35.7	250 (char. E, H) or 500 (char. K, M)	E, H, K, M	B, C, W	D	S	P, R	DAL,MSI,SOA
M55342^10@36#0&	36.0	250 (char. E, H) or 500 (char. K, M)	E, H, K, M	B, C, W	G, J	S	P, R	DAL,MSI,SOA
M55342^10@36#5&	36.5	250 (char. E, H) or 500 (char. K, M)	E, H, K, M	B, C, W	D	S	P, R	DAL,MSI,SOA
M55342^10@37#4&	37.4	250 (char. E, H) or 500 (char. K, M)	E, H, K, M	B, C, W	D	S	P, R	DAL,MSI,SOA
M55342^10@38#3&	38.3	250 (char. E, H) or 500 (char. K, M)	E, H, K, M	B, C, W	D	S	P, R	DAL,MSI,SOA
M55342^10@39#0&	39.0	250 (char. E, H) or 500 (char. K, M)	E, H, K, M	B, C, W	G, J, M	S	P, R	DAL,MSI,SOA
M55342^10@39#2&	39.2	250 (char. E, H) or 500 (char. K, M)	E, H, K, M	B, C, W	D	S	P, R	DAL,MSI,SOA
M55342^10@40#2&	40.2	250 (char. E, H) or 500 (char. K, M)	E, H, K, M	B, C, W	D	S	P, R	DAL,MSI,SOA
M55342^10@41#2&	41.2	250 (char. E, H) or 500 (char. K, M)	E, H, K, M	B, C, W	D	S	P, R	DAL,MSI,SOA
M55342^10@42#2&	42.2	250 (char. E, H) or 500 (char. K, M)	E, H, K, M	B, C, W	D	S	P, R	DAL,MSI,SOA
M55342^10@43#0&	43.0	250 (char. E, H) or 500 (char. K, M)	E, H, K, M	B, C, W	G, J	S	P, R	DAL,MSI,SOA
M55342^10@43#2&	43.2	250 (char. E, H) or 500 (char. K, M)	E, H, K, M	B, C, W	D	S	P, R	DAL,MSI,SOA
M55342^10@44#2&	44.2	250 (char. E, H) or 500 (char. K, M)	E, H, K, M	B, C, W	D	S	P, R	DAL,MSI,SOA
M55342^10@45#3&	45.3	250 (char. E, H) or 500 (char. K, M)	E, H, K, M	B, C, W	D	S	P, R	DAL,MSI,SOA
M55342^10@46#4&	46.4	250 (char. E, H) or 500 (char. K, M)	E, H, K, M	B, C, W	D	S	P, R	DAL,MSI,SOA
M55342^10@47#0&	47.0	250 (char. E, H) or 500 (char. K, M)	E, H, K, M	B, C, W	G, J, M	S	P, R	DAL,MSI,SOA
M55342^10@47#5&	47.5	250 (char. E, H) or 500 (char. K, M)	E, H, K, M	B, C, W	D	S	P, R	DAL,MSI,SOA
M55342^10@48#7&	48.7	250 (char. E, H) or 500 (char. K, M)	E, H, K, M	B, C, W	D	S	P, R	DAL,MSI,SOA
M55342^10@49#9&	49.9	250 (char. E, H) or 500 (char. K, M)	E, H, K, M	B, C, W	D	S	P, R	DAL,MSI,SOA

M55342^10@51#0&	51.0	250 (char. E, H) or 500 (char. K, M)	E, H, K, M	B, C, W	G, J	S	P, R	DAL,MSI,SOA
M55342^10@51#1&	51.1	250 (char. E, H) or 500 (char. K, M)	E, H, K, M	B, C, W	D	S	P, R	DAL,MSI,SOA
M55342^10@52#3&	52.3	250 (char. E, H) or 500 (char. K, M)	E, H, K, M	B, C, W	D	S	P, R	DAL,MSI,SOA
M55342^10@53#6&	53.6	250 (char. E, H) or 500 (char. K, M)	E, H, K, M	B, C, W	D	S	P, R	DAL,MSI,SOA
M55342^10@54#9&	54.9	250 (char. E, H) or 500 (char. K, M)	E, H, K, M	B, C, W	D	S	P, R	DAL,MSI,SOA
M55342^10@56#0&	56.0	250 (char. E, H) or 500 (char. K, M)	E, H, K, M	B, C, W	G, J, M	S	P, R	DAL,MSI,SOA
M55342^10@56#2&	56.2	250 (char. E, H) or 500 (char. K, M)	E, H, K, M	B, C, W	D	S	P, R	DAL,MSI,SOA
M55342^10@57#6&	57.6	250 (char. E, H) or 500 (char. K, M)	E, H, K, M	B, C, W	D	S	P, R	DAL,MSI,SOA
M55342^10@59#0&	59.0	250 (char. E, H) or 500 (char. K, M)	E, H, K, M	B, C, W	D	S	P, R	DAL,MSI,SOA
M55342^10@60#4&	60.4	250 (char. E, H) or 500 (char. K, M)	E, H, K, M	B, C, W	D	S	P, R	DAL,MSI,SOA
M55342^10@61#9&	61.9	250 (char. E, H) or 500 (char. K, M)	E, H, K, M	B, C, W	D	S	P, R	DAL,MSI,SOA
M55342^10@62#0&	62.0	250 (char. E, H) or 500 (char. K, M)	E, H, K, M	B, C, W	G, J	S	P, R	DAL,MSI,SOA
M55342^10@63#4&	63.4	250 (char. E, H) or 500 (char. K, M)	E, H, K, M	B, C, W	D	S	P, R	DAL,MSI,SOA
M55342^10@64#9&	64.9	250 (char. E, H) or 500 (char. K, M)	E, H, K, M	B, C, W	D	S	P, R	DAL,MSI,SOA
M55342^10@66#5&	66.5	250 (char. E, H) or 500 (char. K, M)	E, H, K, M	B, C, W	D	S	P, R	DAL,MSI,SOA
M55342^10@68#0&	68.0	250 (char. E, H) or 500 (char. K, M)	E, H, K, M	B, C, W	G, J, M	S	P, R	DAL,MSI,SOA
M55342^10@68#1&	68.1	250 (char. E, H) or 500 (char. K, M)	E, H, K, M	B, C, W	D	S	P, R	DAL,MSI,SOA
M55342^10@69#8&	69.8	250 (char. E, H) or 500 (char. K, M)	E, H, K, M	B, C, W	D	S	P, R	DAL,MSI,SOA
M55342^10@71#5&	71.5	250 (char. E, H) or 500 (char. K, M)	E, H, K, M	B, C, W	D	S	P, R	DAL,MSI,SOA
M55342^10@73#2&	73.2	250 (char. E, H) or 500 (char. K, M)	E, H, K, M	B, C, W	D	S	P, R	DAL,MSI,SOA
M55342^10@75#0&	75.0	250 (char. E, H) or 500 (char. K, M)	E, H, K, M	B, C, W	D, G, J	S	P, R	DAL,MSI,SOA
M55342^10@76#8&	76.8	250 (char. E, H) or 500 (char. K, M)	E, H, K, M	B, C, W	D	S	P, R	DAL,MSI,SOA
M55342^10@78#7&	78.7	250 (char. E, H) or 500 (char. K, M)	E, H, K, M	B, C, W	D	S	P, R	DAL,MSI,SOA
M55342^10@80#6&	80.6	250 (char. E, H) or 500 (char. K, M)	E, H, K, M	B, C, W	D	S	P, R	DAL,MSI,SOA
M55342^10@82#0&	82.0	250 (char. E, H) or 500 (char. K, M)	E, H, K, M	B, C, W	G, J, M	S	P, R	DAL,MSI,SOA
M55342^10@82#5&	82.5	250 (char. E, H) or 500 (char. K, M)	E, H, K, M	B, C, W	D	S	P, R	DAL,MSI,SOA
M55342^10@84#5&	84.5	250 (char. E, H) or 500 (char. K, M)	E, H, K, M	B, C, W	D	S	P, R	DAL,MSI,SOA
M55342^10@86#6&	86.6	250 (char. E, H) or 500 (char. K, M)	E, H, K, M	B, C, W	D	S	P, R	DAL,MSI,SOA
M55342^10@88#7&	88.7	250 (char. E, H) or 500 (char. K, M)	E, H, K, M	B, C, W	D	S	P, R	DAL,MSI,SOA
M55342^10@90#9&	90.9	250 (char. E, H) or 500 (char. K, M)	E, H, K, M	B, C, W	D	S	P, R	DAL,MSI,SOA
M55342^10@91#0&	91.0	250 (char. E, H) or 500 (char. K, M)	E, H, K, M	B, C, W	G, J	S	P, R	DAL,MSI,SOA
M55342^10@93#1&	93.1	250 (char. E, H) or 500 (char. K, M)	E, H, K, M	B, C, W	D	S	P, R	DAL,MSI,SOA
M55342^10@95#3&	95.3	250 (char. E, H) or 500 (char. K, M)	E, H, K, M	B, C, W	D	S	P, R	DAL,MSI,SOA
M55342^10@97#6&	97.6	250 (char. E, H) or 500 (char. K, M)	E, H, K, M	B, C, W	D	S	P, R	DAL,MSI,SOA
M55342^10@100#&	100	250 (char. E, H) or 500 (char. K, M)	E, H, K, M	B, C, W	D, G, J, M	S	P, R	DAL,MSI,SOA
M55342^10@102#&	102	250 (char. E, H) or 500 (char. K, M)	E, H, K, M	B, C, W	D	S	P, R	DAL,MSI,SOA
M55342^10@105#&	105	250 (char. E, H) or 500 (char. K, M)	E, H, K, M	B, C, W	D	S	P, R	DAL,MSI,SOA
M55342^10@107#&	107	250 (char. E, H) or 500 (char. K, M)	E, H, K, M	B, C, W	D	S	P, R	DAL,MSI,SOA
M55342^10@110#&	110	250 (char. E, H) or 500 (char. K, M)	E, H, K, M	B, C, W	D, G, J	S	P, R	DAL,MSI,SOA
M55342^10@113#&	113	250 (char. E, H) or 500 (char. K, M)	E, H, K, M	B, C, W	D	S	P, R	DAL,MSI,SOA
M55342^10@115#&	115	250 (char. E, H) or 500 (char. K, M)	E, H, K, M	B, C, W	D	S	P, R	DAL,MSI,SOA
M55342^10@118#&	118	250 (char. E, H) or 500 (char. K, M)	E, H, K, M	B, C, W	D	S	P, R	DAL,MSI,SOA
M55342^10@120#&	120	250 (char. E, H) or 500 (char. K, M)	E, H, K, M	B, C, W	G, J, M	S	P, R	DAL,MSI,SOA
M55342^10@121#&	121	250 (char. E, H) or 500 (char. K, M)	E, H, K, M	B, C, W	D	S	P, R	DAL,MSI,SOA
M55342^10@124#&	124	250 (char. E, H) or 500 (char. K, M)	E, H, K, M	B, C, W	D	S	P, R	DAL,MSI,SOA
M55342^10@127#&	127	250 (char. E, H) or 500 (char. K, M)	E, H, K, M	B, C, W	D	S	P, R	DAL,MSI,SOA
M55342^10@130#&	130	250 (char. E, H) or 500 (char. K, M)	E, H, K, M	B, C, W	D, G, J	S	P, R	DAL,MSI,SOA

M55342^10@133#&	133	250 (char. E, H) or 500 (char. K, M)	E, H, K, M	B, C, W	D	S	P, R	DAL,MSI,SOA
M55342^10@137#&	137	250 (char. E, H) or 500 (char. K, M)	E, H, K, M	B, C, W	D	S	P, R	DAL,MSI,SOA
M55342^10@140#&	140	250 (char. E, H) or 500 (char. K, M)	E, H, K, M	B, C, W	D	S	P, R	DAL,MSI,SOA
M55342^10@143#&	143	250 (char. E, H) or 500 (char. K, M)	E, H, K, M	B, C, W	D	S	P, R	DAL,MSI,SOA
M55342^10@147#&	147	250 (char. E, H) or 500 (char. K, M)	E, H, K, M	B, C, W	D	S	P, R	DAL,MSI,SOA
M55342^10@150#&	150	250 (char. E, H) or 500 (char. K, M)	E, H, K, M	B, C, W	D, G, J, M	S	P, R	DAL,MSI,SOA
M55342^10@154#&	154	250 (char. E, H) or 500 (char. K, M)	E, H, K, M	B, C, W	D	S	P, R	DAL,MSI,SOA
M55342^10@158#&	158	250 (char. E, H) or 500 (char. K, M)	E, H, K, M	B, C, W	D	S	P, R	DAL,MSI,SOA
M55342^10@160#&	160	250 (char. E, H) or 500 (char. K, M)	E, H, K, M	B, C, W	G, J	S	P, R	DAL,MSI,SOA
M55342^10@162#&	162	250 (char. E, H) or 500 (char. K, M)	E, H, K, M	B, C, W	D	S	P, R	DAL,MSI,SOA
M55342^10@165#&	165	250 (char. E, H) or 500 (char. K, M)	E, H, K, M	B, C, W	D	S	P, R	DAL,MSI,SOA
M55342^10@169#&	169	250 (char. E, H) or 500 (char. K, M)	E, H, K, M	B, C, W	D	S	P, R	DAL,MSI,SOA
M55342^10@174#&	174	250 (char. E, H) or 500 (char. K, M)	E, H, K, M	B, C, W	D	S	P, R	DAL,MSI,SOA
M55342^10@178#&	178	250 (char. E, H) or 500 (char. K, M)	E, H, K, M	B, C, W	D	S	P, R	DAL,MSI,SOA
M55342^10@180#&	180	250 (char. E, H) or 500 (char. K, M)	E, H, K, M	B, C, W	G, J, M	S	P, R	DAL,MSI,SOA
M55342^10@182#&	182	250 (char. E, H) or 500 (char. K, M)	E, H, K, M	B, C, W	D	S	P, R	DAL,MSI,SOA
M55342^10@187#&	187	250 (char. E, H) or 500 (char. K, M)	E, H, K, M	B, C, W	D	S	P, R	DAL,MSI,SOA
M55342^10@191#&	191	250 (char. E, H) or 500 (char. K, M)	E, H, K, M	B, C, W	D	S	P, R	DAL,MSI,SOA
M55342^10@196#&	196	250 (char. E, H) or 500 (char. K, M)	E, H, K, M	B, C, W	D	S	P, R	DAL,MSI,SOA
M55342^10@200#&	200	250 (char. E, H) or 500 (char. K, M)	E, H, K, M	B, C, W	D, G, J, M	S	P, R	DAL,MSI,SOA
M55342^10@205#&	205	250 (char. E, H) or 500 (char. K, M)	E, H, K, M	B, C, W	D	S	P, R	DAL,MSI,SOA
M55342^10@210#&	210	250 (char. E, H) or 500 (char. K, M)	E, H, K, M	B, C, W	D	S	P, R	DAL,MSI,SOA
M55342^10@215#&	215	250 (char. E, H) or 500 (char. K, M)	E, H, K, M	B, C, W	D	S	P, R	DAL,MSI,SOA
M55342^10@220#&	220	250 (char. E, H) or 500 (char. K, M)	E, H, K, M	B, C, W	G, J, M	S	P, R	DAL,MSI,SOA
M55342^10@221#&	221	250 (char. E, H) or 500 (char. K, M)	E, H, K, M	B, C, W	D	S	P, R	DAL,MSI,SOA
M55342^10@226#&	226	250 (char. E, H) or 500 (char. K, M)	E, H, K, M	B, C, W	D	S	P, R	DAL,MSI,SOA
M55342^10@232#&	232	250 (char. E, H) or 500 (char. K, M)	E, H, K, M	B, C, W	D	S	P, R	DAL,MSI,SOA
M55342^10@237#&	237	250 (char. E, H) or 500 (char. K, M)	E, H, K, M	B, C, W	D	S	P, R	DAL,MSI,SOA
M55342^10@240#&	240	250 (char. E, H) or 500 (char. K, M)	E, H, K, M	B, C, W	G, J	S	P, R	DAL,MSI,SOA
M55342^10@243#&	243	250 (char. E, H) or 500 (char. K, M)	E, H, K, M	B, C, W	D	S	P, R	DAL,MSI,SOA
M55342^10@249#&	249	250 (char. E, H) or 500 (char. K, M)	E, H, K, M	B, C, W	D	S	P, R	DAL,MSI,SOA
M55342^10@255#&	255	250 (char. E, H) or 500 (char. K, M)	E, H, K, M	B, C, W	D	S	P, R	DAL,MSI,SOA
M55342^10@261#&	261	250 (char. E, H) or 500 (char. K, M)	E, H, K, M	B, C, W	D	S	P, R	DAL,MSI,SOA
M55342^10@267#&	267	250 (char. E, H) or 500 (char. K, M)	E, H, K, M	B, C, W	D	S	P, R	DAL,MSI,SOA
M55342^10@270#&	270	250 (char. E, H) or 500 (char. K, M)	E, H, K, M	B, C, W	G, J, M	S	P, R	DAL,MSI,SOA
M55342^10@274#&	274	250 (char. E, H) or 500 (char. K, M)	E, H, K, M	B, C, W	D	S	P, R	DAL,MSI,SOA
M55342^10@280#&	280	250 (char. E, H) or 500 (char. K, M)	E, H, K, M	B, C, W	D	S	P, R	DAL,MSI,SOA
M55342^10@287#&	287	250 (char. E, H) or 500 (char. K, M)	E, H, K, M	B, C, W	D	S	P, R	DAL,MSI,SOA
M55342^10@294#&	294	250 (char. E, H) or 500 (char. K, M)	E, H, K, M	B, C, W	D	S	P, R	DAL,MSI,SOA
M55342^10@300#&	300	250 (char. E, H) or 500 (char. K, M)	E, H, K, M	B, C, W	G, J	S	P, R	DAL,MSI,SOA
M55342^10@301#&	301	250 (char. E, H) or 500 (char. K, M)	E, H, K, M	B, C, W	D	S	P, R	DAL,MSI,SOA
M55342^10@309#&	309	250 (char. E, H) or 500 (char. K, M)	E, H, K, M	B, C, W	D	S	P, R	DAL,MSI,SOA
M55342^10@316#&	316	250 (char. E, H) or 500 (char. K, M)	E, H, K, M	B, C, W	D	S	P, R	DAL,MSI,SOA
M55342^10@324#&	324	250 (char. E, H) or 500 (char. K, M)	E, H, K, M	B, C, W	D	S	P, R	DAL,MSI,SOA
M55342^10@330#&	330	250 (char. E, H) or 500 (char. K, M)	E, H, K, M	B, C, W	G, J, M	S	P, R	DAL,MSI,SOA
M55342^10@332#&	332	250 (char. E, H) or 500 (char. K, M)	E, H, K, M	B, C, W	D	S	P, R	DAL,MSI,SOA
M55342^10@340#&	340	250 (char. E, H) or 500 (char. K, M)	E, H, K, M	B, C, W	D	S	P, R	DAL,MSI,SOA

M55342^10@348#&	348	250 (char. E, H) or 500 (char. K, M)	E, H, K, M	B, C, W	D	S	P, R	DAL,MSI,SOA
M55342^10@357#&	357	250 (char. E, H) or 500 (char. K, M)	E, H, K, M	B, C, W	D	S	P, R	DAL,MSI,SOA
M55342^10@360#&	360	250 (char. E, H) or 500 (char. K, M)	E, H, K, M	B, C, W	G, J	S	P, R	DAL,MSI,SOA
M55342^10@365#&	365	250 (char. E, H) or 500 (char. K, M)	E, H, K, M	B, C, W	D	S	P, R	DAL,MSI,SOA
M55342^10@374#&	374	250 (char. E, H) or 500 (char. K, M)	E, H, K, M	B, C, W	D	S	P, R	DAL,MSI,SOA
M55342^10@383#&	383	250 (char. E, H) or 500 (char. K, M)	E, H, K, M	B, C, W	D	S	P, R	DAL,MSI,SOA
M55342^10@390#&	390	250 (char. E, H) or 500 (char. K, M)	E, H, K, M	B, C, W	G, J, M	S	P, R	DAL,MSI,SOA
M55342^10@392#&	392	250 (char. E, H) or 500 (char. K, M)	E, H, K, M	B, C, W	D	S	P, R	DAL,MSI,SOA
M55342^10@402#&	402	250 (char. E, H) or 500 (char. K, M)	E, H, K, M	B, C, W	D	S	P, R	DAL,MSI,SOA
M55342^10@412#&	412	250 (char. E, H) or 500 (char. K, M)	E, H, K, M	B, C, W	D	S	P, R	DAL,MSI,SOA
M55342^10@422#&	422	250 (char. E, H) or 500 (char. K, M)	E, H, K, M	B, C, W	D	S	P, R	DAL,MSI,SOA
M55342^10@430#&	430	250 (char. E, H) or 500 (char. K, M)	E, H, K, M	B, C, W	G, J	S	P, R	DAL,MSI,SOA
M55342^10@432#&	432	250 (char. E, H) or 500 (char. K, M)	E, H, K, M	B, C, W	D	S	P, R	DAL,MSI,SOA
M55342^10@442#&	442	250 (char. E, H) or 500 (char. K, M)	E, H, K, M	B, C, W	D	S	P, R	DAL,MSI,SOA
M55342^10@453#&	453	250 (char. E, H) or 500 (char. K, M)	E, H, K, M	B, C, W	D	S	P, R	DAL,MSI,SOA
M55342^10@464#&	464	250 (char. E, H) or 500 (char. K, M)	E, H, K, M	B, C, W	D	S	P, R	DAL,MSI,SOA
M55342^10@470#&	470	250 (char. E, H) or 500 (char. K, M)	E, H, K, M	B, C, W	G, J, M	S	P, R	DAL,MSI,SOA
M55342^10@475#&	475	250 (char. E, H) or 500 (char. K, M)	E, H, K, M	B, C, W	D	S	P, R	DAL,MSI,SOA
M55342^10@487#&	487	250 (char. E, H) or 500 (char. K, M)	E, H, K, M	B, C, W	D	S	P, R	DAL,MSI,SOA
M55342^10@499#&	499	250 (char. E, H) or 500 (char. K, M)	E, H, K, M	B, C, W	D	S	P, R	DAL,MSI,SOA
M55342^10@510#&	510	250 (char. E, H) or 500 (char. K, M)	E, H, K, M	B, C, W	G, J	S	P, R	DAL,MSI,SOA
M55342^10@511#&	511	250 (char. E, H) or 500 (char. K, M)	E, H, K, M	B, C, W	D	S	P, R	DAL,MSI,SOA
M55342^10@523#&	523	250 (char. E, H) or 500 (char. K, M)	E, H, K, M	B, C, W	D	S	P, R	DAL,MSI,SOA
M55342^10@536#&	536	250 (char. E, H) or 500 (char. K, M)	E, H, K, M	B, C, W	D	S	P, R	DAL,MSI,SOA
M55342^10@549#&	549	250 (char. E, H) or 500 (char. K, M)	E, H, K, M	B, C, W	D	S	P, R	DAL,MSI,SOA
M55342^10@560#&	560	250 (char. E, H) or 500 (char. K, M)	E, H, K, M	B, C, W	G, J, M	S	P, R	DAL,MSI,SOA
M55342^10@562#&	562	250 (char. E, H) or 500 (char. K, M)	E, H, K, M	B, C, W	D	S	P, R	DAL,MSI,SOA
M55342^10@576#&	576	250 (char. E, H) or 500 (char. K, M)	E, H, K, M	B, C, W	D	S	P, R	DAL,MSI,SOA
M55342^10@590#&	590	250 (char. E, H) or 500 (char. K, M)	E, H, K, M	B, C, W	D	S	P, R	DAL,MSI,SOA
M55342^10@604#&	604	250 (char. E, H) or 500 (char. K, M)	E, H, K, M	B, C, W	D	S	P, R	DAL,MSI,SOA
M55342^10@619#&	619	250 (char. E, H) or 500 (char. K, M)	E, H, K, M	B, C, W	D	S	P, R	DAL,MSI,SOA
M55342^10@620#&	620	250 (char. E, H) or 500 (char. K, M)	E, H, K, M	B, C, W	G, J	S	P, R	DAL,MSI,SOA
M55342^10@634#&	634	250 (char. E, H) or 500 (char. K, M)	E, H, K, M	B, C, W	D	S	P, R	DAL,MSI,SOA
M55342^10@649#&	649	250 (char. E, H) or 500 (char. K, M)	E, H, K, M	B, C, W	D	S	P, R	DAL,MSI,SOA
M55342^10@665#&	665	250 (char. E, H) or 500 (char. K, M)	E, H, K, M	B, C, W	D	S	P, R	DAL,MSI,SOA
M55342^10@680#&	680	250 (char. E, H) or 500 (char. K, M)	E, H, K, M	B, C, W	G, J, M	S	P, R	DAL,MSI,SOA
M55342^10@681#&	681	250 (char. E, H) or 500 (char. K, M)	E, H, K, M	B, C, W	D	S	P, R	DAL,MSI,SOA
M55342^10@698#&	698	250 (char. E, H) or 500 (char. K, M)	E, H, K, M	B, C, W	D	S	P, R	DAL,MSI,SOA
M55342^10@715#&	715	250 (char. E, H) or 500 (char. K, M)	E, H, K, M	B, C, W	D	S	P, R	DAL,MSI,SOA
M55342^10@732#&	732	250 (char. E, H) or 500 (char. K, M)	E, H, K, M	B, C, W	D	S	P, R	DAL,MSI,SOA
M55342^10@750#&	750	250 (char. E, H) or 500 (char. K, M)	E, H, K, M	B, C, W	D, G, J	S	P, R	DAL,MSI,SOA
M55342^10@768#&	768	250 (char. E, H) or 500 (char. K, M)	E, H, K, M	B, C, W	D	S	P, R	DAL,MSI,SOA
M55342^10@787#&	787	250 (char. E, H) or 500 (char. K, M)	E, H, K, M	B, C, W	D	S	P, R	DAL,MSI,SOA
M55342^10@806#&	806	250 (char. E, H) or 500 (char. K, M)	E, H, K, M	B, C, W	D	S	P, R	DAL,MSI,SOA
M55342^10@820#&	820	250 (char. E, H) or 500 (char. K, M)	E, H, K, M	B, C, W	G, J, M	S	P, R	DAL,MSI,SOA
M55342^10@825#&	825	250 (char. E, H) or 500 (char. K, M)	E, H, K, M	B, C, W	D	S	P, R	DAL,MSI,SOA
M55342^10@845#&	845	250 (char. E, H) or 500 (char. K, M)	E, H, K, M	B, C, W	D	S	P, R	DAL,MSI,SOA

M55342^10@866#&	866	250 (char. E, H) or 500 (char. K, M)	E, H, K, M	B, C, W	D	S	P, R	DAL,MSI,SOA
M55342^10@887#&	887	250 (char. E, H) or 500 (char. K, M)	E, H, K, M	B, C, W	D	S	P, R	DAL,MSI,SOA
M55342^10@909#&	909	250 (char. E, H) or 500 (char. K, M)	E, H, K, M	B, C, W	D	S	P, R	DAL,MSI,SOA
M55342^10@910#&	910	250 (char. E, H) or 500 (char. K, M)	E, H, K, M	B, C, W	G, J	S	P, R	DAL,MSI,SOA
M55342^10@931#&	931	250 (char. E, H) or 500 (char. K, M)	E, H, K, M	B, C, W	D	S	P, R	DAL,MSI,SOA
M55342^10@953#&	953	250 (char. E, H) or 500 (char. K, M)	E, H, K, M	B, C, W	D	S	P, R	DAL,MSI,SOA
M55342^10@976#&	976	250 (char. E, H) or 500 (char. K, M)	E, H, K, M	B, C, W	D	S	P, R	DAL,MSI,SOA
M55342^10@1#00&	1,000	250 (char. E, H) or 500 (char. K, M)	E, H, K, M	B, C, W	E, H, K, N	S	P, R	DAL,MSI,SOA
M55342^10@1#02&	1,020	250 (char. E, H) or 500 (char. K, M)	E, H, K, M	B, C, W	E	S	P, R	DAL,MSI,SOA
M55342^10@1#05&	1,050	250 (char. E, H) or 500 (char. K, M)	E, H, K, M	B, C, W	E	S	P, R	DAL,MSI,SOA
M55342^10@1#07&	1,070	250 (char. E, H) or 500 (char. K, M)	E, H, K, M	B, C, W	E	S	P, R	DAL,MSI,SOA
M55342^10@1#10&	1,100	250 (char. E, H) or 500 (char. K, M)	E, H, K, M	B, C, W	E, H, K	S	P, R	DAL,MSI,SOA
M55342^10@1#13&	1,130	250 (char. E, H) or 500 (char. K, M)	E, H, K, M	B, C, W	E	S	P, R	DAL,MSI,SOA
M55342^10@1#15&	1,150	250 (char. E, H) or 500 (char. K, M)	E, H, K, M	B, C, W	E	S	P, R	DAL,MSI,SOA
M55342^10@1#18&	1,180	250 (char. E, H) or 500 (char. K, M)	E, H, K, M	B, C, W	E	S	P, R	DAL,MSI,SOA
M55342^10@1#20&	1,200	250 (char. E, H) or 500 (char. K, M)	E, H, K, M	B, C, W	H, K, N	S	P, R	DAL,MSI,SOA
M55342^10@1#21&	1,210	250 (char. E, H) or 500 (char. K, M)	E, H, K, M	B, C, W	E	S	P, R	DAL,MSI,SOA
M55342^10@1#24&	1,240	250 (char. E, H) or 500 (char. K, M)	E, H, K, M	B, C, W	E	S	P, R	DAL,MSI,SOA
M55342^10@1#27&	1,270	250 (char. E, H) or 500 (char. K, M)	E, H, K, M	B, C, W	E	S	P, R	DAL,MSI,SOA
M55342^10@1#30&	1,300	250 (char. E, H) or 500 (char. K, M)	E, H, K, M	B, C, W	E, H, K	S	P, R	DAL,MSI,SOA
M55342^10@1#33&	1,330	250 (char. E, H) or 500 (char. K, M)	E, H, K, M	B, C, W	E	S	P, R	DAL,MSI,SOA
M55342^10@1#37&	1,370	250 (char. E, H) or 500 (char. K, M)	E, H, K, M	B, C, W	E	S	P, R	DAL,MSI,SOA
M55342^10@1#40&	1,400	250 (char. E, H) or 500 (char. K, M)	E, H, K, M	B, C, W	E	S	P, R	DAL,MSI,SOA
M55342^10@1#43&	1,430	250 (char. E, H) or 500 (char. K, M)	E, H, K, M	B, C, W	E	S	P, R	DAL,MSI,SOA
M55342^10@1#47&	1,470	250 (char. E, H) or 500 (char. K, M)	E, H, K, M	B, C, W	E	S	P, R	DAL,MSI,SOA
M55342^10@1#50&	1,500	250 (char. E, H) or 500 (char. K, M)	E, H, K, M	B, C, W	E, H, K, N	S	P, R	DAL,MSI,SOA
M55342^10@1#54&	1,540	250 (char. E, H) or 500 (char. K, M)	E, H, K, M	B, C, W	E	S	P, R	DAL,MSI,SOA
M55342^10@1#58&	1,580	250 (char. E, H) or 500 (char. K, M)	E, H, K, M	B, C, W	E	S	P, R	DAL,MSI,SOA
M55342^10@1#60&	1,600	250 (char. E, H) or 500 (char. K, M)	E, H, K, M	B, C, W	H, K	S	P, R	DAL,MSI,SOA
M55342^10@1#62&	1,620	250 (char. E, H) or 500 (char. K, M)	E, H, K, M	B, C, W	E	S	P, R	DAL,MSI,SOA
M55342^10@1#65&	1,650	250 (char. E, H) or 500 (char. K, M)	E, H, K, M	B, C, W	E	S	P, R	DAL,MSI,SOA
M55342^10@1#69&	1,690	250 (char. E, H) or 500 (char. K, M)	E, H, K, M	B, C, W	E	S	P, R	DAL,MSI,SOA
M55342^10@1#74&	1,740	250 (char. E, H) or 500 (char. K, M)	E, H, K, M	B, C, W	E	S	P, R	DAL,MSI,SOA
M55342^10@1#78&	1,780	250 (char. E, H) or 500 (char. K, M)	E, H, K, M	B, C, W	E	S	P, R	DAL,MSI,SOA
M55342^10@1#80&	1,800	250 (char. E, H) or 500 (char. K, M)	E, H, K, M	B, C, W	H, K, N	S	P, R	DAL,MSI,SOA
M55342^10@1#82&	1,820	250 (char. E, H) or 500 (char. K, M)	E, H, K, M	B, C, W	E	S	P, R	DAL,MSI,SOA
M55342^10@1#87&	1,870	250 (char. E, H) or 500 (char. K, M)	E, H, K, M	B, C, W	E	S	P, R	DAL,MSI,SOA
M55342^10@1#91&	1,910	250 (char. E, H) or 500 (char. K, M)	E, H, K, M	B, C, W	E	S	P, R	DAL,MSI,SOA
M55342^10@1#96&	1,960	250 (char. E, H) or 500 (char. K, M)	E, H, K, M	B, C, W	E	S	P, R	DAL,MSI,SOA
M55342^10@2#00&	2,000	250 (char. E, H) or 500 (char. K, M)	E, H, K, M	B, C, W	E, H, K, N	S	P, R	DAL,MSI,SOA
M55342^10@2#05&	2,050	250 (char. E, H) or 500 (char. K, M)	E, H, K, M	B, C, W	E	S	P, R	DAL,MSI,SOA
M55342^10@2#10&	2,100	250 (char. E, H) or 500 (char. K, M)	E, H, K, M	B, C, W	E	S	P, R	DAL,MSI,SOA
M55342^10@2#15&	2,150	250 (char. E, H) or 500 (char. K, M)	E, H, K, M	B, C, W	E	S	P, R	DAL,MSI,SOA
M55342^10@2#20&	2,200	250 (char. E, H) or 500 (char. K, M)	E, H, K, M	B, C, W	H, K, N	S	P, R	DAL,MSI,SOA
M55342^10@2#21&	2,210	250 (char. E, H) or 500 (char. K, M)	E, H, K, M	B, C, W	E	S	P, R	DAL,MSI,SOA
M55342^10@2#26&	2,260	250 (char. E, H) or 500 (char. K, M)	E, H, K, M	B, C, W	E	S	P, R	DAL,MSI,SOA
M55342^10@2#32&	2,320	250 (char. E, H) or 500 (char. K, M)	E, H, K, M	B, C, W	E	S	P, R	DAL,MSI,SOA

M55342^10@2#37&	2,370	250 (char. E, H) or 500 (char. K, M)	E, H, K, M	B, C, W	E	S	P, R	DAL,MSI,SOA
M55342^10@2#40&	2,400	250 (char. E, H) or 500 (char. K, M)	E, H, K, M	B, C, W	H, K	S	P, R	DAL,MSI,SOA
M55342^10@2#43&	2,430	250 (char. E, H) or 500 (char. K, M)	E, H, K, M	B, C, W	E	S	P, R	DAL,MSI,SOA
M55342^10@2#49&	2,490	250 (char. E, H) or 500 (char. K, M)	E, H, K, M	B, C, W	E	S	P, R	DAL,MSI,SOA
M55342^10@2#55&	2,550	250 (char. E, H) or 500 (char. K, M)	E, H, K, M	B, C, W	E	S	P, R	DAL,MSI,SOA
M55342^10@2#61&	2,610	250 (char. E, H) or 500 (char. K, M)	E, H, K, M	B, C, W	E	S	P, R	DAL,MSI,SOA
M55342^10@2#67&	2,670	250 (char. E, H) or 500 (char. K, M)	E, H, K, M	B, C, W	E	S	P, R	DAL,MSI,SOA
M55342^10@2#70&	2,700	250 (char. E, H) or 500 (char. K, M)	E, H, K, M	B, C, W	H, K, N	S	P, R	DAL,MSI,SOA
M55342^10@2#74&	2,740	250 (char. E, H) or 500 (char. K, M)	E, H, K, M	B, C, W	E	S	P, R	DAL,MSI,SOA
M55342^10@2#80&	2,800	250 (char. E, H) or 500 (char. K, M)	E, H, K, M	B, C, W	E	S	P, R	DAL,MSI,SOA
M55342^10@2#87&	2,870	250 (char. E, H) or 500 (char. K, M)	E, H, K, M	B, C, W	E	S	P, R	DAL,MSI,SOA
M55342^10@2#94&	2,940	250 (char. E, H) or 500 (char. K, M)	E, H, K, M	B, C, W	E	S	P, R	DAL,MSI,SOA
M55342^10@3#00&	3,000	250 (char. E, H) or 500 (char. K, M)	E, H, K, M	B, C, W	H, K	S	P, R	DAL,MSI,SOA
M55342^10@3#01&	3,010	250 (char. E, H) or 500 (char. K, M)	E, H, K, M	B, C, W	E	S	P, R	DAL,MSI,SOA
M55342^10@3#09&	3,090	250 (char. E, H) or 500 (char. K, M)	E, H, K, M	B, C, W	E	S	P, R	DAL,MSI,SOA
M55342^10@3#16&	3,160	250 (char. E, H) or 500 (char. K, M)	E, H, K, M	B, C, W	E	S	P, R	DAL,MSI,SOA
M55342^10@3#24&	3,240	250 (char. E, H) or 500 (char. K, M)	E, H, K, M	B, C, W	E	S	P, R	DAL,MSI,SOA
M55342^10@3#30&	3,300	250 (char. E, H) or 500 (char. K, M)	E, H, K, M	B, C, W	H, K, N	S	P, R	DAL,MSI,SOA
M55342^10@3#32&	3,320	250 (char. E, H) or 500 (char. K, M)	E, H, K, M	B, C, W	E	S	P, R	DAL,MSI,SOA
M55342^10@3#40&	3,400	250 (char. E, H) or 500 (char. K, M)	E, H, K, M	B, C, W	E	S	P, R	DAL,MSI,SOA
M55342^10@3#48&	3,480	250 (char. E, H) or 500 (char. K, M)	E, H, K, M	B, C, W	E	S	P, R	DAL,MSI,SOA
M55342^10@3#57&	3,570	250 (char. E, H) or 500 (char. K, M)	E, H, K, M	B, C, W	E	S	P, R	DAL,MSI,SOA
M55342^10@3#60&	3,600	250 (char. E, H) or 500 (char. K, M)	E, H, K, M	B, C, W	H, K	S	P, R	DAL,MSI,SOA
M55342^10@3#65&	3,650	250 (char. E, H) or 500 (char. K, M)	E, H, K, M	B, C, W	E	S	P, R	DAL,MSI,SOA
M55342^10@3#74&	3,740	250 (char. E, H) or 500 (char. K, M)	E, H, K, M	B, C, W	E	S	P, R	DAL,MSI,SOA
M55342^10@3#83&	3,830	250 (char. E, H) or 500 (char. K, M)	E, H, K, M	B, C, W	E	S	P, R	DAL,MSI,SOA
M55342^10@3#90&	3,900	250 (char. E, H) or 500 (char. K, M)	E, H, K, M	B, C, W	H, K, N	S	P, R	DAL,MSI,SOA
M55342^10@3#92&	3,920	250 (char. E, H) or 500 (char. K, M)	E, H, K, M	B, C, W	E	S	P, R	DAL,MSI,SOA
M55342^10@4#02&	4,020	250 (char. E, H) or 500 (char. K, M)	E, H, K, M	B, C, W	E	S	P, R	DAL,MSI,SOA
M55342^10@4#12&	4,120	250 (char. E, H) or 500 (char. K, M)	E, H, K, M	B, C, W	E	S	P, R	DAL,MSI,SOA
M55342^10@4#22&	4,220	250 (char. E, H) or 500 (char. K, M)	E, H, K, M	B, C, W	E	S	P, R	DAL,MSI,SOA
M55342^10@4#30&	4,300	250 (char. E, H) or 500 (char. K, M)	E, H, K, M	B, C, W	H, K	S	P, R	DAL,MSI,SOA
M55342^10@4#32&	4,320	250 (char. E, H) or 500 (char. K, M)	E, H, K, M	B, C, W	E	S	P, R	DAL,MSI,SOA
M55342^10@4#42&	4,420	250 (char. E, H) or 500 (char. K, M)	E, H, K, M	B, C, W	E	S	P, R	DAL,MSI,SOA
M55342^10@4#53&	4,530	250 (char. E, H) or 500 (char. K, M)	E, H, K, M	B, C, W	E	S	P, R	DAL,MSI,SOA
M55342^10@4#64&	4,640	250 (char. E, H) or 500 (char. K, M)	E, H, K, M	B, C, W	E	S	P, R	DAL,MSI,SOA
M55342^10@4#70&	4,700	250 (char. E, H) or 500 (char. K, M)	E, H, K, M	B, C, W	H, K, N	S	P, R	DAL,MSI,SOA
M55342^10@4#75&	4,750	250 (char. E, H) or 500 (char. K, M)	E, H, K, M	B, C, W	E	S	P, R	DAL,MSI,SOA
M55342^10@4#87&	4,870	250 (char. E, H) or 500 (char. K, M)	E, H, K, M	B, C, W	E	S	P, R	DAL,MSI,SOA
M55342^10@4#99&	4,990	250 (char. E, H) or 500 (char. K, M)	E, H, K, M	B, C, W	E	S	P, R	DAL,MSI,SOA
M55342^10@5#10&	5,100	250 (char. E, H) or 500 (char. K, M)	E, H, K, M	B, C, W	H, K	S	P, R	DAL,MSI,SOA
M55342^10@5#11&	5,110	250 (char. E, H) or 500 (char. K, M)	E, H, K, M	B, C, W	E	S	P, R	DAL,MSI,SOA
M55342^10@5#23&	5,230	250 (char. E, H) or 500 (char. K, M)	E, H, K, M	B, C, W	E	S	P, R	DAL,MSI,SOA
M55342^10@5#36&	5,360	250 (char. E, H) or 500 (char. K, M)	E, H, K, M	B, C, W	E	S	P, R	DAL,MSI,SOA
M55342^10@5#49&	5,490	250 (char. E, H) or 500 (char. K, M)	E, H, K, M	B, C, W	E	S	P, R	DAL,MSI,SOA
M55342^10@5#60&	5,600	250 (char. E, H) or 500 (char. K, M)	E, H, K, M	B, C, W	H, K, N	S	P, R	DAL,MSI,SOA
M55342^10@5#62&	5,620	250 (char. E, H) or 500 (char. K, M)	E, H, K, M	B, C, W	E	S	P, R	DAL,MSI,SOA

M55342^10@5#76&	5,760	250 (char. E, H) or 500 (char. K, M)	E, H, K, M	B, C, W	E	S	P, R	DAL,MSI,SOA
M55342^10@5#90&	5,900	250 (char. E, H) or 500 (char. K, M)	E, H, K, M	B, C, W	E	S	P, R	DAL,MSI,SOA
M55342^10@6#04&	6,040	250 (char. E, H) or 500 (char. K, M)	E, H, K, M	B, C, W	E	S	P, R	DAL,MSI,SOA
M55342^10@6#19&	6,190	250 (char. E, H) or 500 (char. K, M)	E, H, K, M	B, C, W	E	S	P, R	DAL,MSI,SOA
M55342^10@6#20&	6,200	250 (char. E, H) or 500 (char. K, M)	E, H, K, M	B, C, W	H, K	S	P, R	DAL,MSI,SOA
M55342^10@6#34&	6,340	250 (char. E, H) or 500 (char. K, M)	E, H, K, M	B, C, W	E	S	P, R	DAL,MSI,SOA
M55342^10@6#49&	6,490	250 (char. E, H) or 500 (char. K, M)	E, H, K, M	B, C, W	E	S	P, R	DAL,MSI,SOA
M55342^10@6#65&	6,650	250 (char. E, H) or 500 (char. K, M)	E, H, K, M	B, C, W	E	S	P, R	DAL,MSI,SOA
M55342^10@6#80&	6,800	250 (char. E, H) or 500 (char. K, M)	E, H, K, M	B, C, W	H, K, N	S	P, R	DAL,MSI,SOA
M55342^10@6#81&	6,810	250 (char. E, H) or 500 (char. K, M)	E, H, K, M	B, C, W	E	S	P, R	DAL,MSI,SOA
M55342^10@6#98&	6,980	250 (char. E, H) or 500 (char. K, M)	E, H, K, M	B, C, W	E	S	P, R	DAL,MSI,SOA
M55342^10@7#15&	7,150	250 (char. E, H) or 500 (char. K, M)	E, H, K, M	B, C, W	E	S	P, R	DAL,MSI,SOA
M55342^10@7#32&	7,320	250 (char. E, H) or 500 (char. K, M)	E, H, K, M	B, C, W	E	S	P, R	DAL,MSI,SOA
M55342^10@7#50&	7,500	250 (char. E, H) or 500 (char. K, M)	E, H, K, M	B, C, W	E, H, K	S	P, R	DAL,MSI,SOA
M55342^10@7#68&	7,680	250 (char. E, H) or 500 (char. K, M)	E, H, K, M	B, C, W	E	S	P, R	DAL,MSI,SOA
M55342^10@7#87&	7,870	250 (char. E, H) or 500 (char. K, M)	E, H, K, M	B, C, W	E	S	P, R	DAL,MSI,SOA
M55342^10@8#06&	8,060	250 (char. E, H) or 500 (char. K, M)	E, H, K, M	B, C, W	E	S	P, R	DAL,MSI,SOA
M55342^10@8#20&	8,200	250 (char. E, H) or 500 (char. K, M)	E, H, K, M	B, C, W	H, K, N	S	P, R	DAL,MSI,SOA
M55342^10@8#25&	8,250	250 (char. E, H) or 500 (char. K, M)	E, H, K, M	B, C, W	E	S	P, R	DAL,MSI,SOA
M55342^10@8#45&	8,450	250 (char. E, H) or 500 (char. K, M)	E, H, K, M	B, C, W	E	S	P, R	DAL,MSI,SOA
M55342^10@8#66&	8,660	250 (char. E, H) or 500 (char. K, M)	E, H, K, M	B, C, W	E	S	P, R	DAL,MSI,SOA
M55342^10@8#87&	8,870	250 (char. E, H) or 500 (char. K, M)	E, H, K, M	B, C, W	E	S	P, R	DAL,MSI,SOA
M55342^10@9#09&	9,090	250 (char. E, H) or 500 (char. K, M)	E, H, K, M	B, C, W	E	S	P, R	DAL,MSI,SOA
M55342^10@9#10&	9,100	250 (char. E, H) or 500 (char. K, M)	E, H, K, M	B, C, W	H, K	S	P, R	DAL,MSI,SOA
M55342^10@9#31&	9,310	250 (char. E, H) or 500 (char. K, M)	E, H, K, M	B, C, W	E	S	P, R	DAL,MSI,SOA
M55342^10@9#53&	9,530	250 (char. E, H) or 500 (char. K, M)	E, H, K, M	B, C, W	E	S	P, R	DAL,MSI,SOA
M55342^10@9#76&	9,760	250 (char. E, H) or 500 (char. K, M)	E, H, K, M	B, C, W	E	S	P, R	DAL,MSI,SOA
M55342^10@10#0&	10,000	250 (char. E, H) or 500 (char. K, M)	E, H, K, M	B, C, W	E, H, K, N	S	P, R	DAL,MSI,SOA
M55342^10@10#2&	10,200	250 (char. E, H) or 500 (char. K, M)	E, H, K, M	B, C, W	E	S	P, R	DAL,MSI,SOA
M55342^10@10#5&	10,500	250 (char. E, H) or 500 (char. K, M)	E, H, K, M	B, C, W	E	S	P, R	DAL,MSI,SOA
M55342^10@10#7&	10,700	250 (char. E, H) or 500 (char. K, M)	E, H, K, M	B, C, W	E	S	P, R	DAL,MSI,SOA
M55342^10@11#0&	11,000	250 (char. E, H) or 500 (char. K, M)	E, H, K, M	B, C, W	E, H, K	S	P, R	DAL,MSI,SOA
M55342^10@11#3&	11,300	250 (char. E, H) or 500 (char. K, M)	E, H, K, M	B, C, W	E	S	P, R	DAL,MSI,SOA
M55342^10@11#5&	11,500	250 (char. E, H) or 500 (char. K, M)	E, H, K, M	B, C, W	E	S	P, R	DAL,MSI,SOA
M55342^10@11#8&	11,800	250 (char. E, H) or 500 (char. K, M)	E, H, K, M	B, C, W	E	S	P, R	DAL,MSI,SOA
M55342^10@12#0&	12,000	250 (char. E, H) or 500 (char. K, M)	E, H, K, M	B, C, W	H, K, N	S	P, R	DAL,MSI,SOA
M55342^10@12#1&	12,100	250 (char. E, H) or 500 (char. K, M)	E, H, K, M	B, C, W	E	S	P, R	DAL,MSI,SOA
M55342^10@12#4&	12,400	250 (char. E, H) or 500 (char. K, M)	E, H, K, M	B, C, W	E	S	P, R	DAL,MSI,SOA
M55342^10@12#7&	12,700	250 (char. E, H) or 500 (char. K, M)	E, H, K, M	B, C, W	E	S	P, R	DAL,MSI,SOA
M55342^10@13#0&	13,000	250 (char. E, H) or 500 (char. K, M)	E, H, K, M	B, C, W	E, H, K	S	P, R	DAL,MSI,SOA
M55342^10@13#3&	13,300	250 (char. E, H) or 500 (char. K, M)	E, H, K, M	B, C, W	E	S	P, R	DAL,MSI,SOA
M55342^10@13#7&	13,700	250 (char. E, H) or 500 (char. K, M)	E, H, K, M	B, C, W	E	S	P, R	DAL,MSI,SOA
M55342^10@14#0&	14,000	250 (char. E, H) or 500 (char. K, M)	E, H, K, M	B, C, W	E	S	P, R	DAL,MSI,SOA
M55342^10@14#3&	14,300	250 (char. E, H) or 500 (char. K, M)	E, H, K, M	B, C, W	E	S	P, R	DAL,MSI,SOA
M55342^10@14#7&	14,700	250 (char. E, H) or 500 (char. K, M)	E, H, K, M	B, C, W	E	S	P, R	DAL,MSI,SOA
M55342^10@15#0&	15,000	250 (char. E, H) or 500 (char. K, M)	E, H, K, M	B, C, W	E, H, K, N	S	P, R	DAL,MSI,SOA
M55342^10@15#4&	15,400	250 (char. E, H) or 500 (char. K, M)	E, H, K, M	B, C, W	E	S	P, R	DAL,MSI,SOA

M55342^10@15#8&	15,800	250 (char. E, H) or 500 (char. K, M)	E, H, K, M	B, C, W	E	S	P, R	DAL,MSI,SOA
M55342^10@16#0&	16,000	250 (char. E, H) or 500 (char. K, M)	E, H, K, M	B, C, W	H, K	S	P, R	DAL,MSI,SOA
M55342^10@16#2&	16,200	250 (char. E, H) or 500 (char. K, M)	E, H, K, M	B, C, W	E	S	P, R	DAL,MSI,SOA
M55342^10@16#5&	16,500	250 (char. E, H) or 500 (char. K, M)	E, H, K, M	B, C, W	E	S	P, R	DAL,MSI,SOA
M55342^10@16#9&	16,900	250 (char. E, H) or 500 (char. K, M)	E, H, K, M	B, C, W	E	S	P, R	DAL,MSI,SOA
M55342^10@17#4&	17,400	250 (char. E, H) or 500 (char. K, M)	E, H, K, M	B, C, W	E	S	P, R	DAL,MSI,SOA
M55342^10@17#8&	17,800	250 (char. E, H) or 500 (char. K, M)	E, H, K, M	B, C, W	E	S	P, R	DAL,MSI,SOA
M55342^10@18#0&	18,000	250 (char. E, H) or 500 (char. K, M)	E, H, K, M	B, C, W	H, K, N	S	P, R	DAL,MSI,SOA
M55342^10@18#2&	18,200	250 (char. E, H) or 500 (char. K, M)	E, H, K, M	B, C, W	E	S	P, R	DAL,MSI,SOA
M55342^10@18#7&	18,700	250 (char. E, H) or 500 (char. K, M)	E, H, K, M	B, C, W	E	S	P, R	DAL,MSI,SOA
M55342^10@19#1&	19,100	250 (char. E, H) or 500 (char. K, M)	E, H, K, M	B, C, W	E	S	P, R	DAL,MSI,SOA
M55342^10@19#6&	19,600	250 (char. E, H) or 500 (char. K, M)	E, H, K, M	B, C, W	E	S	P, R	DAL,MSI,SOA
M55342^10@20#0&	20,000	250 (char. E, H) or 500 (char. K, M)	E, H, K, M	B, C, W	E, H, K, N	S	P, R	DAL,MSI,SOA
M55342^10@20#5&	20,500	250 (char. E, H) or 500 (char. K, M)	E, H, K, M	B, C, W	E	S	P, R	DAL,MSI,SOA
M55342^10@21#0&	21,000	250 (char. E, H) or 500 (char. K, M)	E, H, K, M	B, C, W	E	S	P, R	DAL,MSI,SOA
M55342^10@21#5&	21,500	250 (char. E, H) or 500 (char. K, M)	E, H, K, M	B, C, W	E	S	P, R	DAL,MSI,SOA
M55342^10@22#0&	22,000	250 (char. E, H) or 500 (char. K, M)	E, H, K, M	B, C, W	H, K, N	S	P, R	DAL,MSI,SOA
M55342^10@22#1&	22,100	250 (char. E, H) or 500 (char. K, M)	E, H, K, M	B, C, W	E	S	P, R	DAL,MSI,SOA
M55342^10@22#6&	22,600	250 (char. E, H) or 500 (char. K, M)	E, H, K, M	B, C, W	E	S	P, R	DAL,MSI,SOA
M55342^10@23#2&	23,200	250 (char. E, H) or 500 (char. K, M)	E, H, K, M	B, C, W	E	S	P, R	DAL,MSI,SOA
M55342^10@23#7&	23,700	250 (char. E, H) or 500 (char. K, M)	E, H, K, M	B, C, W	E	S	P, R	DAL,MSI,SOA
M55342^10@24#0&	24,000	250 (char. E, H) or 500 (char. K, M)	E, H, K, M	B, C, W	H, K	S	P, R	DAL,MSI,SOA
M55342^10@24#3&	24,300	250 (char. E, H) or 500 (char. K, M)	E, H, K, M	B, C, W	E	S	P, R	DAL,MSI,SOA
M55342^10@24#9&	24,900	250 (char. E, H) or 500 (char. K, M)	E, H, K, M	B, C, W	E	S	P, R	DAL,MSI,SOA
M55342^10@25#5&	25,500	250 (char. E, H) or 500 (char. K, M)	E, H, K, M	B, C, W	E	S	P, R	DAL,MSI,SOA
M55342^10@26#1&	26,100	250 (char. E, H) or 500 (char. K, M)	E, H, K, M	B, C, W	E	S	P, R	DAL,MSI,SOA
M55342^10@26#7&	26,700	250 (char. E, H) or 500 (char. K, M)	E, H, K, M	B, C, W	E	S	P, R	DAL,MSI,SOA
M55342^10@27#0&	27,000	250 (char. E, H) or 500 (char. K, M)	E, H, K, M	B, C, W	H, K, N	S	P, R	DAL,MSI,SOA
M55342^10@27#4&	27,400	250 (char. E, H) or 500 (char. K, M)	E, H, K, M	B, C, W	E	S	P, R	DAL,MSI,SOA
M55342^10@28#0&	28,000	250 (char. E, H) or 500 (char. K, M)	E, H, K, M	B, C, W	E	S	P, R	DAL,MSI,SOA
M55342^10@28#7&	28,700	250 (char. E, H) or 500 (char. K, M)	E, H, K, M	B, C, W	E	S	P, R	DAL,MSI,SOA
M55342^10@29#4&	29,400	250 (char. E, H) or 500 (char. K, M)	E, H, K, M	B, C, W	E	S	P, R	DAL,MSI,SOA
M55342^10@30#0&	30,000	250 (char. E, H) or 500 (char. K, M)	E, H, K, M	B, C, W	H, K	S	P, R	DAL,MSI,SOA
M55342^10@30#1&	30,100	250 (char. E, H) or 500 (char. K, M)	E, H, K, M	B, C, W	E	S	P, R	DAL,MSI,SOA
M55342^10@30#9&	30,900	250 (char. E, H) or 500 (char. K, M)	E, H, K, M	B, C, W	E	S	P, R	DAL,MSI,SOA
M55342^10@31#6&	31,600	250 (char. E, H) or 500 (char. K, M)	E, H, K, M	B, C, W	E	S	P, R	DAL,MSI,SOA
M55342^10@32#4&	32,400	250 (char. E, H) or 500 (char. K, M)	E, H, K, M	B, C, W	E	S	P, R	DAL,MSI,SOA
M55342^10@33#0&	33,000	250 (char. E, H) or 500 (char. K, M)	E, H, K, M	B, C, W	H, K, N	S	P, R	DAL,MSI,SOA
M55342^10@33#2&	33,200	250 (char. E, H) or 500 (char. K, M)	E, H, K, M	B, C, W	E	S	P, R	DAL,MSI,SOA
M55342^10@34#0&	34,000	250 (char. E, H) or 500 (char. K, M)	E, H, K, M	B, C, W	E	S	P, R	DAL,MSI,SOA
M55342^10@34#8&	34,800	250 (char. E, H) or 500 (char. K, M)	E, H, K, M	B, C, W	E	S	P, R	DAL,MSI,SOA
M55342^10@35#7&	35,700	250 (char. E, H) or 500 (char. K, M)	E, H, K, M	B, C, W	E	S	P, R	DAL,MSI,SOA
M55342^10@36#0&	36,000	250 (char. E, H) or 500 (char. K, M)	E, H, K, M	B, C, W	H, K	S	P, R	DAL,MSI,SOA
M55342^10@36#5&	36,500	250 (char. E, H) or 500 (char. K, M)	E, H, K, M	B, C, W	E	S	P, R	DAL,MSI,SOA
M55342^10@37#4&	37,400	250 (char. E, H) or 500 (char. K, M)	E, H, K, M	B, C, W	E	S	P, R	DAL,MSI,SOA
M55342^10@38#3&	38,300	250 (char. E, H) or 500 (char. K, M)	E, H, K, M	B, C, W	E	S	P, R	DAL,MSI,SOA
M55342^10@39#0&	39,000	250 (char. E, H) or 500 (char. K, M)	E, H, K, M	B, C, W	H, K, N	S	P, R	DAL,MSI,SOA

M55342^10@39#2&	39,200	250 (char. E, H) or 500 (char. K, M)	E, H, K, M	B, C, W	E	S	P, R	DAL,MSI,SOA
M55342^10@40#2&	40,200	250 (char. E, H) or 500 (char. K, M)	E, H, K, M	B, C, W	E	S	P, R	DAL,MSI,SOA
M55342^10@41#2&	41,200	250 (char. E, H) or 500 (char. K, M)	E, H, K, M	B, C, W	E	S	P, R	DAL,MSI,SOA
M55342^10@42#2&	42,200	250 (char. E, H) or 500 (char. K, M)	E, H, K, M	B, C, W	E	S	P, R	DAL,MSI,SOA
M55342^10@43#0&	43,000	250 (char. E, H) or 500 (char. K, M)	E, H, K, M	B, C, W	H, K	S	P, R	DAL,MSI,SOA
M55342^10@43#2&	43,200	250 (char. E, H) or 500 (char. K, M)	E, H, K, M	B, C, W	E	S	P, R	DAL,MSI,SOA
M55342^10@44#2&	44,200	250 (char. E, H) or 500 (char. K, M)	E, H, K, M	B, C, W	E	S	P, R	DAL,MSI,SOA
M55342^10@45#3&	45,300	250 (char. E, H) or 500 (char. K, M)	E, H, K, M	B, C, W	E	S	P, R	DAL,MSI,SOA
M55342^10@46#4&	46,400	250 (char. E, H) or 500 (char. K, M)	E, H, K, M	B, C, W	E	S	P, R	DAL,MSI,SOA
M55342^10@47#0&	47,000	250 (char. E, H) or 500 (char. K, M)	E, H, K, M	B, C, W	H, K, N	S	P, R	DAL,MSI,SOA
M55342^10@47#5&	47,500	250 (char. E, H) or 500 (char. K, M)	E, H, K, M	B, C, W	E	S	P, R	DAL,MSI,SOA
M55342^10@48#7&	48,700	250 (char. E, H) or 500 (char. K, M)	E, H, K, M	B, C, W	E	S	P, R	DAL,MSI,SOA
M55342^10@49#9&	49,900	250 (char. E, H) or 500 (char. K, M)	E, H, K, M	B, C, W	E	S	P, R	DAL,MSI,SOA
M55342^10@51#0&	51,000	250 (char. E, H) or 500 (char. K, M)	E, H, K, M	B, C, W	H, K	S	P, R	DAL,MSI,SOA
M55342^10@51#1&	51,100	250 (char. E, H) or 500 (char. K, M)	E, H, K, M	B, C, W	E	S	P, R	DAL,MSI,SOA
M55342^10@52#3&	52,300	250 (char. E, H) or 500 (char. K, M)	E, H, K, M	B, C, W	E	S	P, R	DAL,MSI,SOA
M55342^10@53#6&	53,600	250 (char. E, H) or 500 (char. K, M)	E, H, K, M	B, C, W	E	S	P, R	DAL,MSI,SOA
M55342^10@54#9&	54,900	250 (char. E, H) or 500 (char. K, M)	E, H, K, M	B, C, W	E	S	P, R	DAL,MSI,SOA
M55342^10@56#0&	56,000	250 (char. E, H) or 500 (char. K, M)	E, H, K, M	B, C, W	H, K, N	S	P, R	DAL,MSI,SOA
M55342^10@56#2&	56,200	250 (char. E, H) or 500 (char. K, M)	E, H, K, M	B, C, W	E	S	P, R	DAL,MSI,SOA
M55342^10@57#6&	57,600	250 (char. E, H) or 500 (char. K, M)	E, H, K, M	B, C, W	E	S	P, R	DAL,MSI,SOA
M55342^10@59#0&	59,000	250 (char. E, H) or 500 (char. K, M)	E, H, K, M	B, C, W	E	S	P, R	DAL,MSI,SOA
M55342^10@60#4&	60,400	250 (char. E, H) or 500 (char. K, M)	E, H, K, M	B, C, W	E	S	P, R	DAL,MSI,SOA
M55342^10@61#9&	61,900	250 (char. E, H) or 500 (char. K, M)	E, H, K, M	B, C, W	E	S	P, R	DAL,MSI,SOA
M55342^10@62#0&	62,000	250 (char. E, H) or 500 (char. K, M)	E, H, K, M	B, C, W	H, K	S	P, R	DAL,MSI,SOA
M55342^10@63#4&	63,400	250 (char. E, H) or 500 (char. K, M)	E, H, K, M	B, C, W	E	S	P, R	DAL,MSI,SOA
M55342^10@64#9&	64,900	250 (char. E, H) or 500 (char. K, M)	E, H, K, M	B, C, W	E	S	P, R	DAL,MSI,SOA
M55342^10@66#5&	66,500	250 (char. E, H) or 500 (char. K, M)	E, H, K, M	B, C, W	E	S	P, R	DAL,MSI,SOA
M55342^10@68#0&	68,000	250 (char. E, H) or 500 (char. K, M)	E, H, K, M	B, C, W	H, K, N	S	P, R	DAL,MSI,SOA
M55342^10@68#1&	68,100	250 (char. E, H) or 500 (char. K, M)	E, H, K, M	B, C, W	E	S	P, R	DAL,MSI,SOA
M55342^10@69#8&	69,800	250 (char. E, H) or 500 (char. K, M)	E, H, K, M	B, C, W	E	S	P, R	DAL,MSI,SOA
M55342^10@71#5&	71,500	250 (char. E, H) or 500 (char. K, M)	E, H, K, M	B, C, W	E	S	P, R	DAL,MSI,SOA
M55342^10@73#2&	73,200	250 (char. E, H) or 500 (char. K, M)	E, H, K, M	B, C, W	E	S	P, R	DAL,MSI,SOA
M55342^10@75#0&	75,000	250 (char. E, H) or 500 (char. K, M)	E, H, K, M	B, C, W	E, H, K	S	P, R	DAL,MSI,SOA
M55342^10@76#8&	76,800	250 (char. E, H) or 500 (char. K, M)	E, H, K, M	B, C, W	E	S	P, R	DAL,MSI,SOA
M55342^10@78#7&	78,700	250 (char. E, H) or 500 (char. K, M)	E, H, K, M	B, C, W	E	S	P, R	DAL,MSI,SOA
M55342^10@80#6&	80,600	250 (char. E, H) or 500 (char. K, M)	E, H, K, M	B, C, W	E	S	P, R	DAL,MSI,SOA
M55342^10@82#0&	82,000	250 (char. E, H) or 500 (char. K, M)	E, H, K, M	B, C, W	H, K, N	S	P, R	DAL,MSI,SOA
M55342^10@82#5&	82,500	250 (char. E, H) or 500 (char. K, M)	E, H, K, M	B, C, W	E	S	P, R	DAL,MSI,SOA
M55342^10@84#5&	84,500	250 (char. E, H) or 500 (char. K, M)	E, H, K, M	B, C, W	E	S	P, R	DAL,MSI,SOA
M55342^10@86#6&	86,600	250 (char. E, H) or 500 (char. K, M)	E, H, K, M	B, C, W	E	S	P, R	DAL,MSI,SOA
M55342^10@88#7&	88,700	250 (char. E, H) or 500 (char. K, M)	E, H, K, M	B, C, W	E	S	P, R	DAL,MSI,SOA
M55342^10@90#9&	90,900	250 (char. E, H) or 500 (char. K, M)	E, H, K, M	B, C, W	E	S	P, R	DAL,MSI,SOA
M55342^10@91#0&	91,000	250 (char. E, H) or 500 (char. K, M)	E, H, K, M	B, C, W	H, K	S	P, R	DAL,MSI,SOA
M55342^10@93#1&	93,100	250 (char. E, H) or 500 (char. K, M)	E, H, K, M	B, C, W	E	S	P, R	DAL,MSI,SOA
M55342^10@95#3&	95,300	250 (char. E, H) or 500 (char. K, M)	E, H, K, M	B, C, W	E	S	P, R	DAL,MSI,SOA
M55342^10@97#6&	97,600	250 (char. E, H) or 500 (char. K, M)	E, H, K, M	B, C, W	E	S	P, R	DAL,MSI,SOA

M55342^10@10#0&	100,000	250 (char. E, H) or 500 (char. K, M)	E, H, K, M	B, C, W	E, H, K, N	S	P, R	DAL,MSI,SOA
M55342^10@10#2&	102,000	250 (char. E, H) or 500 (char. K, M)	E, H, K, M	B, C, W	E	S	P, R	DAL,MSI,SOA
M55342^10@10#5&	105,000	250 (char. E, H) or 500 (char. K, M)	E, H, K, M	B, C, W	E	S	P, R	DAL,MSI,SOA
M55342^10@10#7&	107,000	250 (char. E, H) or 500 (char. K, M)	E, H, K, M	B, C, W	E	S	P, R	DAL,MSI,SOA
M55342^10@11#0&	110,000	250 (char. E, H) or 500 (char. K, M)	E, H, K, M	B, C, W	E, H, K	S	P, R	DAL,MSI,SOA
M55342^10@11#3&	113,000	250 (char. E, H) or 500 (char. K, M)	E, H, K, M	B, C, W	E	S	P, R	DAL,MSI,SOA
M55342^10@11#5&	115,000	250 (char. E, H) or 500 (char. K, M)	E, H, K, M	B, C, W	E	S	P, R	DAL,MSI,SOA
M55342^10@11#8&	118,000	250 (char. E, H) or 500 (char. K, M)	E, H, K, M	B, C, W	E	S	P, R	DAL,MSI,SOA
M55342^10@12#0&	120,000	250 (char. E, H) or 500 (char. K, M)	E, H, K, M	B, C, W	H, K, N	S	P, R	DAL,MSI,SOA
M55342^10@12#1&	121,000	250 (char. E, H) or 500 (char. K, M)	E, H, K, M	B, C, W	E	S	P, R	DAL,MSI,SOA
M55342^10@12#4&	124,000	250 (char. E, H) or 500 (char. K, M)	E, H, K, M	B, C, W	E	S	P, R	DAL,MSI,SOA
M55342^10@12#7&	127,000	250 (char. E, H) or 500 (char. K, M)	E, H, K, M	B, C, W	E	S	P, R	DAL,MSI,SOA
M55342^10@13#0&	130,000	250 (char. E, H) or 500 (char. K, M)	E, H, K, M	B, C, W	E, H, K	S	P, R	DAL,MSI,SOA
M55342^10@13#3&	133,000	250 (char. E, H) or 500 (char. K, M)	E, H, K, M	B, C, W	E	S	P, R	DAL,MSI,SOA
M55342^10@13#7&	137,000	250 (char. E, H) or 500 (char. K, M)	E, H, K, M	B, C, W	E	S	P, R	DAL,MSI,SOA
M55342^10@14#0&	140,000	250 (char. E, H) or 500 (char. K, M)	E, H, K, M	B, C, W	E	S	P, R	DAL,MSI,SOA
M55342^10@14#3&	143,000	250 (char. E, H) or 500 (char. K, M)	E, H, K, M	B, C, W	E	S	P, R	DAL,MSI,SOA
M55342^10@14#7&	147,000	250 (char. E, H) or 500 (char. K, M)	E, H, K, M	B, C, W	E	S	P, R	DAL,MSI,SOA
M55342^10@15#0&	150,000	250 (char. E, H) or 500 (char. K, M)	E, H, K, M	B, C, W	E, H, K, N	S	P, R	DAL,MSI,SOA
M55342^10@15#4&	154,000	250 (char. E, H) or 500 (char. K, M)	E, H, K, M	B, C, W	E	S	P, R	DAL,MSI,SOA
M55342^10@15#8&	158,000	250 (char. E, H) or 500 (char. K, M)	E, H, K, M	B, C, W	E	S	P, R	DAL,MSI,SOA
M55342^10@16#0&	160,000	250 (char. E, H) or 500 (char. K, M)	E, H, K, M	B, C, W	H, K	S	P, R	DAL,MSI,SOA
M55342^10@16#2&	162,000	250 (char. E, H) or 500 (char. K, M)	E, H, K, M	B, C, W	E	S	P, R	DAL,MSI,SOA
M55342^10@16#5&	165,000	250 (char. E, H) or 500 (char. K, M)	E, H, K, M	B, C, W	E	S	P, R	DAL,MSI,SOA
M55342^10@16#9&	169,000	250 (char. E, H) or 500 (char. K, M)	E, H, K, M	B, C, W	E	S	P, R	DAL,MSI,SOA
M55342^10@17#4&	174,000	250 (char. E, H) or 500 (char. K, M)	E, H, K, M	B, C, W	E	S	P, R	DAL,MSI,SOA
M55342^10@17#8&	178,000	250 (char. E, H) or 500 (char. K, M)	E, H, K, M	B, C, W	E	S	P, R	DAL,MSI,SOA
M55342^10@18#0&	180,000	250 (char. E, H) or 500 (char. K, M)	E, H, K, M	B, C, W	H, K, N	S	P, R	DAL,MSI,SOA
M55342^10@18#2&	182,000	250 (char. E, H) or 500 (char. K, M)	E, H, K, M	B, C, W	E	S	P, R	DAL,MSI,SOA
M55342^10@18#7&	187,000	250 (char. E, H) or 500 (char. K, M)	E, H, K, M	B, C, W	E	S	P, R	DAL,MSI,SOA
M55342^10@19#1&	191,000	250 (char. E, H) or 500 (char. K, M)	E, H, K, M	B, C, W	E	S	P, R	DAL,MSI,SOA
M55342^10@19#6&	196,000	250 (char. E, H) or 500 (char. K, M)	E, H, K, M	B, C, W	E	S	P, R	DAL,MSI,SOA
M55342^10@20#0&	200,000	250 (char. E, H) or 500 (char. K, M)	E, H, K, M	B, C, W	E, H, K, N	S	P, R	DAL,MSI,SOA
M55342^10@20#5&	205,000	250 (char. E, H) or 500 (char. K, M)	E, H, K, M	B, C, W	E	S	P, R	DAL,MSI,SOA
M55342^10@21#0&	210,000	250 (char. E, H) or 500 (char. K, M)	E, H, K, M	B, C, W	E	S	P, R	DAL,MSI,SOA
M55342^10@21#5&	215,000	250 (char. E, H) or 500 (char. K, M)	E, H, K, M	B, C, W	E	S	P, R	DAL,MSI,SOA
M55342^10@22#0&	220,000	250 (char. E, H) or 500 (char. K, M)	E, H, K, M	B, C, W	H, K, N	S	P, R	DAL,MSI,SOA
M55342^10@22#1&	221,000	250 (char. E, H) or 500 (char. K, M)	E, H, K, M	B, C, W	E	S	P, R	DAL,MSI,SOA
M55342^10@22#6&	226,000	250 (char. E, H) or 500 (char. K, M)	E, H, K, M	B, C, W	E	S	P, R	DAL,MSI,SOA
M55342^10@23#2&	232,000	250 (char. E, H) or 500 (char. K, M)	E, H, K, M	B, C, W	E	S	P, R	DAL,MSI,SOA
M55342^10@23#7&	237,000	250 (char. E, H) or 500 (char. K, M)	E, H, K, M	B, C, W	E	S	P, R	DAL,MSI,SOA
M55342^10@24#0&	240,000	250 (char. E, H) or 500 (char. K, M)	E, H, K, M	B, C, W	H, K	S	P, R	DAL,MSI,SOA
M55342^10@24#3&	243,000	250 (char. E, H) or 500 (char. K, M)	E, H, K, M	B, C, W	E	S	P, R	DAL,MSI,SOA
M55342^10@24#9&	249,000	250 (char. E, H) or 500 (char. K, M)	E, H, K, M	B, C, W	E	S	P, R	DAL,MSI,SOA
M55342^10@25#5&	255,000	250 (char. E, H) or 500 (char. K, M)	E, H, K, M	B, C, W	E	S	P, R	DAL,MSI,SOA
M55342^10@26#1&	261,000	250 (char. E, H) or 500 (char. K, M)	E, H, K, M	B, C, W	E	S	P, R	DAL,MSI,SOA
M55342^10@26#7&	267,000	250 (char. E, H) or 500 (char. K, M)	E, H, K, M	B, C, W	E	S	P, R	DAL,MSI,SOA

M55342^10@27#0&	270,000	250 (char. E, H) or 500 (char. K, M)	E, H, K, M	B, C, W	H, K, N	S	P, R	DAL,MSI,SOA
M55342^10@27#4&	274,000	250 (char. E, H) or 500 (char. K, M)	E, H, K, M	B, C, W	E	S	P, R	DAL,MSI,SOA
M55342^10@28#0&	280,000	250 (char. E, H) or 500 (char. K, M)	E, H, K, M	B, C, W	E	S	P, R	DAL,MSI,SOA
M55342^10@28#7&	287,000	250 (char. E, H) or 500 (char. K, M)	E, H, K, M	B, C, W	E	S	P, R	DAL,MSI,SOA
M55342^10@29#4&	294,000	250 (char. E, H) or 500 (char. K, M)	E, H, K, M	B, C, W	E	S	P, R	DAL,MSI,SOA
M55342^10@30#0&	300,000	250 (char. E, H) or 500 (char. K, M)	E, H, K, M	B, C, W	H, K	S	P, R	DAL,MSI,SOA
M55342^10@30#1&	301,000	250 (char. E, H) or 500 (char. K, M)	E, H, K, M	B, C, W	E	S	P, R	DAL,MSI,SOA
M55342^10@30#9&	309,000	250 (char. E, H) or 500 (char. K, M)	E, H, K, M	B, C, W	E	S	P, R	DAL,MSI,SOA
M55342^10@31#6&	316,000	250 (char. E, H) or 500 (char. K, M)	E, H, K, M	B, C, W	E	S	P, R	DAL,MSI,SOA
M55342^10@32#4&	324,000	250 (char. E, H) or 500 (char. K, M)	E, H, K, M	B, C, W	E	S	P, R	DAL,MSI,SOA
M55342^10@33#0&	330,000	250 (char. E, H) or 500 (char. K, M)	E, H, K, M	B, C, W	H, K, N	S	P, R	DAL,MSI,SOA
M55342^10@33#2&	332,000	250 (char. E, H) or 500 (char. K, M)	E, H, K, M	B, C, W	E	S	P, R	DAL,MSI,SOA
M55342^10@34#0&	340,000	250 (char. E, H) or 500 (char. K, M)	E, H, K, M	B, C, W	E	S	P, R	DAL,MSI,SOA
M55342^10@34#8&	348,000	250 (char. E, H) or 500 (char. K, M)	E, H, K, M	B, C, W	E	S	P, R	DAL,MSI,SOA
M55342^10@35#7&	357,000	250 (char. E, H) or 500 (char. K, M)	E, H, K, M	B, C, W	E	S	P, R	DAL,MSI,SOA
M55342^10@36#0&	360,000	250 (char. E, H) or 500 (char. K, M)	E, H, K, M	B, C, W	H, K	S	P, R	DAL,MSI,SOA
M55342^10@36#5&	365,000	250 (char. E, H) or 500 (char. K, M)	E, H, K, M	B, C, W	E	S	P, R	DAL,MSI,SOA
M55342^10@37#4&	374,000	250 (char. E, H) or 500 (char. K, M)	E, H, K, M	B, C, W	E	S	P, R	DAL,MSI,SOA
M55342^10@38#3&	383,000	250 (char. E, H) or 500 (char. K, M)	E, H, K, M	B, C, W	E	S	P, R	DAL,MSI,SOA
M55342^10@39#0&	390,000	250 (char. E, H) or 500 (char. K, M)	E, H, K, M	B, C, W	H, K, N	S	P, R	DAL,MSI,SOA
M55342^10@39#2&	392,000	250 (char. E, H) or 500 (char. K, M)	E, H, K, M	B, C, W	E	S	P, R	DAL,MSI,SOA
M55342^10@40#2&	402,000	250 (char. E, H) or 500 (char. K, M)	E, H, K, M	B, C, W	E	S	P, R	DAL,MSI,SOA
M55342^10@41#2&	412,000	250 (char. E, H) or 500 (char. K, M)	E, H, K, M	B, C, W	E	S	P, R	DAL,MSI,SOA
M55342^10@42#2&	422,000	250 (char. E, H) or 500 (char. K, M)	E, H, K, M	B, C, W	E	S	P, R	DAL,MSI,SOA
M55342^10@43#0&	430,000	250 (char. E, H) or 500 (char. K, M)	E, H, K, M	B, C, W	H, K	S	P, R	DAL,MSI,SOA
M55342^10@43#2&	432,000	250 (char. E, H) or 500 (char. K, M)	E, H, K, M	B, C, W	E	S	P, R	DAL,MSI,SOA
M55342^10@44#2&	442,000	250 (char. E, H) or 500 (char. K, M)	E, H, K, M	B, C, W	E	S	P, R	DAL,MSI,SOA
M55342^10@45#3&	453,000	250 (char. E, H) or 500 (char. K, M)	E, H, K, M	B, C, W	E	S	P, R	DAL,MSI,SOA
M55342^10@46#4&	464,000	250 (char. E, H) or 500 (char. K, M)	E, H, K, M	B, C, W	E	S	P, R	DAL,MSI,SOA
M55342^10@47#0&	470,000	250 (char. E, H) or 500 (char. K, M)	E, H, K, M	B, C, W	H, K, N	S	P, R	DAL,MSI,SOA
M55342^10@47#5&	475,000	250 (char. E, H) or 500 (char. K, M)	E, H, K, M	B, C, W	E	S	P, R	DAL,MSI,SOA
M55342^10@48#7&	487,000	250 (char. E, H) or 500 (char. K, M)	E, H, K, M	B, C, W	E	S	P, R	DAL,MSI,SOA
M55342^10@49#9&	499,000	250 (char. E, H) or 500 (char. K, M)	E, H, K, M	B, C, W	E	S	P, R	DAL,MSI,SOA
M55342^10@51#0&	510,000	250 (char. E, H) or 500 (char. K, M)	E, H, K, M	B, C, W	H, K	S	P, R	DAL,MSI,SOA
M55342^10@51#1&	511,000	250 (char. E, H) or 500 (char. K, M)	E, H, K, M	B, C, W	E	S	P, R	DAL,MSI,SOA
M55342^10@52#3&	523,000	250 (char. E, H) or 500 (char. K, M)	E, H, K, M	B, C, W	E	S	P, R	DAL,MSI,SOA
M55342^10@53#6&	536,000	250 (char. E, H) or 500 (char. K, M)	E, H, K, M	B, C, W	E	S	P, R	DAL,MSI,SOA
M55342^10@54#9&	549,000	250 (char. E, H) or 500 (char. K, M)	E, H, K, M	B, C, W	E	S	P, R	DAL,MSI,SOA
M55342^10@56#0&	560,000	250 (char. E, H) or 500 (char. K, M)	E, H, K, M	B, C, W	H, K, N	S	P, R	DAL,MSI,SOA
M55342^10@56#2&	562,000	250 (char. E, H) or 500 (char. K, M)	E, H, K, M	B, C, W	E	S	P, R	DAL,MSI,SOA
M55342^10@57#6&	576,000	250 (char. E, H) or 500 (char. K, M)	E, H, K, M	B, C, W	E	S	P, R	DAL,MSI,SOA
M55342^10@59#0&	590,000	250 (char. E, H) or 500 (char. K, M)	E, H, K, M	B, C, W	E	S	P, R	DAL,MSI,SOA
M55342^10@60#4&	604,000	250 (char. E, H) or 500 (char. K, M)	E, H, K, M	B, C, W	E	S	P, R	DAL,MSI,SOA
M55342^10@61#9&	619,000	250 (char. E, H) or 500 (char. K, M)	E, H, K, M	B, C, W	E	S	P, R	DAL,MSI,SOA
M55342^10@62#0&	620,000	250 (char. E, H) or 500 (char. K, M)	E, H, K, M	B, C, W	H, K	S	P, R	DAL,MSI,SOA
M55342^10@63#4&	634,000	250 (char. E, H) or 500 (char. K, M)	E, H, K, M	B, C, W	E	S	P, R	DAL,MSI,SOA
M55342^10@64#9&	649,000	250 (char. E, H) or 500 (char. K, M)	E, H, K, M	B, C, W	E	S	P, R	DAL,MSI,SOA

M55342^10@66#5&	665,000	250 (char. E, H) or 500 (char. K, M)	E, H, K, M	B, C, W	E	S	P, R	DAL,MSI,SOA
M55342^10@68#0&	680,000	250 (char. E, H) or 500 (char. K, M)	E, H, K, M	B, C, W	H, K, N	S	P, R	DAL,MSI,SOA
M55342^10@68#1&	681,000	250 (char. E, H) or 500 (char. K, M)	E, H, K, M	B, C, W	E	S	P, R	DAL,MSI,SOA
M55342^10@69#8&	698,000	250 (char. E, H) or 500 (char. K, M)	E, H, K, M	B, C, W	E	S	P, R	DAL,MSI,SOA
M55342^10@71#5&	715,000	250 (char. E, H) or 500 (char. K, M)	E, H, K, M	B, C, W	E	S	P, R	DAL,MSI,SOA
M55342^10@73#2&	732,000	250 (char. E, H) or 500 (char. K, M)	E, H, K, M	B, C, W	E	S	P, R	DAL,MSI,SOA
M55342^10@75#0&	750,000	250 (char. E, H) or 500 (char. K, M)	E, H, K, M	B, C, W	E, H, K	S	P, R	DAL,MSI,SOA
M55342^10@76#8&	768,000	250 (char. E, H) or 500 (char. K, M)	E, H, K, M	B, C, W	E	S	P, R	DAL,MSI,SOA
M55342^10@78#7&	787,000	250 (char. E, H) or 500 (char. K, M)	E, H, K, M	B, C, W	E	S	P, R	DAL,MSI,SOA
M55342^10@80#6&	806,000	250 (char. E, H) or 500 (char. K, M)	E, H, K, M	B, C, W	E	S	P, R	DAL,MSI,SOA
M55342^10@82#0&	820,000	250 (char. E, H) or 500 (char. K, M)	E, H, K, M	B, C, W	H, K, N	S	P, R	DAL,MSI,SOA
M55342^10@82#5&	825,000	250 (char. E, H) or 500 (char. K, M)	E, H, K, M	B, C, W	E	S	P, R	DAL,MSI,SOA
M55342^10@84#5&	845,000	250 (char. E, H) or 500 (char. K, M)	E, H, K, M	B, C, W	E	S	P, R	DAL,MSI,SOA
M55342^10@86#6&	866,000	250 (char. E, H) or 500 (char. K, M)	E, H, K, M	B, C, W	E	S	P, R	DAL,MSI,SOA
M55342^10@88#7&	887,000	250 (char. E, H) or 500 (char. K, M)	E, H, K, M	B, C, W	E	S	P, R	DAL,MSI,SOA
M55342^10@90#9&	909,000	250 (char. E, H) or 500 (char. K, M)	E, H, K, M	B, C, W	E	S	P, R	DAL,MSI,SOA
M55342^10@91#0&	910,000	250 (char. E, H) or 500 (char. K, M)	E, H, K, M	B, C, W	H, K	S	P, R	DAL,MSI,SOA
M55342^10@93#1&	931,000	250 (char. E, H) or 500 (char. K, M)	E, H, K, M	B, C, W	E	S	P, R	DAL,MSI,SOA
M55342^10@95#3&	953,000	250 (char. E, H) or 500 (char. K, M)	E, H, K, M	B, C, W	E	S	P, R	DAL,MSI,SOA
M55342^10@97#6&	976,000	250 (char. E, H) or 500 (char. K, M)	E, H, K, M	B, C, W	E	S	P, R	DAL,MSI,SOA
M55342^10@1#00&	1,000,000	250 (char. E, H) or 500 (char. K, M)	E, H, K, M	B, C, W	F, T, L, P	S	P, R	DAL,MSI,SOA
M55342^10@1#02&	1,020,000	250 (char. E, H) or 500 (char. K, M)	E, H, K, M	B, C, W	F	S	P, R	DAL,MSI,SOA
M55342^10@1#05&	1,050,000	250 (char. E, H) or 500 (char. K, M)	E, H, K, M	B, C, W	F	S	P, R	DAL,MSI,SOA
M55342^10@1#07&	1,070,000	250 (char. E, H) or 500 (char. K, M)	E, H, K, M	B, C, W	F	S	P, R	DAL,MSI,SOA
M55342^10@1#10&	1,100,000	250 (char. E, H) or 500 (char. K, M)	E, H, K, M	B, C, W	F, T, L	S	P, R	DAL,MSI,SOA
M55342^10@1#13&	1,130,000	250 (char. E, H) or 500 (char. K, M)	E, H, K, M	B, C, W	F	S	P, R	DAL,MSI,SOA
M55342^10@1#15&	1,150,000	250 (char. E, H) or 500 (char. K, M)	E, H, K, M	B, C, W	F	S	P, R	DAL,MSI,SOA
M55342^10@1#18&	1,180,000	250 (char. E, H) or 500 (char. K, M)	E, H, K, M	B, C, W	F	S	P, R	DAL,MSI,SOA
M55342^10@1#20&	1,200,000	250 (char. E, H) or 500 (char. K, M)	E, H, K, M	B, C, W	T, L, P	S	P, R	DAL,MSI,SOA
M55342^10@1#21&	1,210,000	250 (char. E, H) or 500 (char. K, M)	E, H, K, M	B, C, W	F	S	P, R	DAL,MSI,SOA
M55342^10@1#24&	1,240,000	250 (char. E, H) or 500 (char. K, M)	E, H, K, M	B, C, W	F	S	P, R	DAL,MSI,SOA
M55342^10@1#27&	1,270,000	250 (char. E, H) or 500 (char. K, M)	E, H, K, M	B, C, W	F	S	P, R	DAL,MSI,SOA
M55342^10@1#30&	1,300,000	250 (char. E, H) or 500 (char. K, M)	E, H, K, M	B, C, W	F, T, L	S	P, R	DAL,MSI,SOA
M55342^10@1#33&	1,330,000	250 (char. E, H) or 500 (char. K, M)	E, H, K, M	B, C, W	F	S	P, R	DAL,MSI,SOA
M55342^10@1#37&	1,370,000	250 (char. E, H) or 500 (char. K, M)	E, H, K, M	B, C, W	F	S	P, R	DAL,MSI,SOA
M55342^10@1#40&	1,400,000	250 (char. E, H) or 500 (char. K, M)	E, H, K, M	B, C, W	F	S	P, R	DAL,MSI,SOA
M55342^10@1#43&	1,430,000	250 (char. E, H) or 500 (char. K, M)	E, H, K, M	B, C, W	F	S	P, R	DAL,MSI,SOA
M55342^10@1#47&	1,470,000	250 (char. E, H) or 500 (char. K, M)	E, H, K, M	B, C, W	F	S	P, R	DAL,MSI,SOA
M55342^10@1#50&	1,500,000	250 (char. E, H) or 500 (char. K, M)	E, H, K, M	B, C, W	F, T, L, P	S	P, R	DAL,MSI,SOA
M55342^10@1#54&	1,540,000	250 (char. E, H) or 500 (char. K, M)	E, H, K, M	B, C, W	F	S	P, R	DAL,MSI,SOA
M55342^10@1#58&	1,580,000	250 (char. E, H) or 500 (char. K, M)	E, H, K, M	B, C, W	F	S	P, R	DAL,MSI,SOA
M55342^10@1#60&	1,600,000	250 (char. E, H) or 500 (char. K, M)	E, H, K, M	B, C, W	T, L	S	P, R	DAL,MSI,SOA
M55342^10@1#62&	1,620,000	250 (char. E, H) or 500 (char. K, M)	E, H, K, M	B, C, W	F	S	P, R	DAL,MSI,SOA
M55342^10@1#65&	1,650,000	250 (char. E, H) or 500 (char. K, M)	E, H, K, M	B, C, W	F	S	P, R	DAL,MSI,SOA
M55342^10@1#69&	1,690,000	250 (char. E, H) or 500 (char. K, M)	E, H, K, M	B, C, W	F	S	P, R	DAL,MSI,SOA
M55342^10@1#74&	1,740,000	250 (char. E, H) or 500 (char. K, M)	E, H, K, M	B, C, W	F	S	P, R	DAL,MSI,SOA
M55342^10@1#78&	1,780,000	250 (char. E, H) or 500 (char. K, M)	E, H, K, M	B, C, W	F	S	P, R	DAL,MSI,SOA

M55342^10@1#80&	1,800,000	250 (char. E, H) or 500 (char. K, M)	E, H, K, M	B, C, W	T, L, P	S	P, R	DAL,MSI,SOA
M55342^10@1#82&	1,820,000	250 (char. E, H) or 500 (char. K, M)	E, H, K, M	B, C, W	F	S	P, R	DAL,MSI,SOA
M55342^10@1#87&	1,870,000	250 (char. E, H) or 500 (char. K, M)	E, H, K, M	B, C, W	F	S	P, R	DAL,MSI,SOA
M55342^10@1#91&	1,910,000	250 (char. E, H) or 500 (char. K, M)	E, H, K, M	B, C, W	F	S	P, R	DAL,MSI,SOA
M55342^10@1#96&	1,960,000	250 (char. E, H) or 500 (char. K, M)	E, H, K, M	B, C, W	F	S	P, R	DAL,MSI,SOA
M55342^10@2#00&	2,000,000	250 (char. E, H) or 500 (char. K, M)	E, H, K, M	B, C, W	F, T, L, P	S	P, R	DAL,MSI,SOA
M55342^10@2#05&	2,050,000	250 (char. E, H) or 500 (char. K, M)	E, H, K, M	B, C, W	F	S	P, R	DAL,MSI,SOA
M55342^10@2#10&	2,100,000	250 (char. E, H) or 500 (char. K, M)	E, H, K, M	B, C, W	F	S	P, R	DAL,MSI,SOA
M55342^10@2#15&	2,150,000	250 (char. E, H) or 500 (char. K, M)	E, H, K, M	B, C, W	F	S	P, R	DAL,MSI,SOA
M55342^10@2#20&	2,200,000	250 (char. E, H) or 500 (char. K, M)	E, H, K, M	B, C, W	T, L, P	S	P, R	DAL,MSI,SOA
M55342^10@2#21&	2,210,000	250 (char. E, H) or 500 (char. K, M)	E, H, K, M	B, C, W	F	S	P, R	DAL,MSI,SOA
M55342^10@2#26&	2,260,000	250 (char. E, H) or 500 (char. K, M)	E, H, K, M	B, C, W	F	S	P, R	DAL,MSI,SOA
M55342^10@2#32&	2,320,000	250 (char. E, H) or 500 (char. K, M)	E, H, K, M	B, C, W	F	S	P, R	DAL,MSI,SOA
M55342^10@2#37&	2,370,000	250 (char. E, H) or 500 (char. K, M)	E, H, K, M	B, C, W	F	S	P, R	DAL,MSI,SOA
M55342^10@2#40&	2,400,000	250 (char. E, H) or 500 (char. K, M)	E, H, K, M	B, C, W	T, L	S	P, R	DAL,MSI,SOA
M55342^10@2#43&	2,430,000	250 (char. E, H) or 500 (char. K, M)	E, H, K, M	B, C, W	F	S	P, R	DAL,MSI,SOA
M55342^10@2#49&	2,490,000	250 (char. E, H) or 500 (char. K, M)	E, H, K, M	B, C, W	F	S	P, R	DAL,MSI,SOA
M55342^10@2#55&	2,550,000	250 (char. E, H) or 500 (char. K, M)	E, H, K, M	B, C, W	F	S	P, R	DAL,MSI,SOA
M55342^10@2#61&	2,610,000	250 (char. E, H) or 500 (char. K, M)	E, H, K, M	B, C, W	F	S	P, R	DAL,MSI,SOA
M55342^10@2#67&	2,670,000	250 (char. E, H) or 500 (char. K, M)	E, H, K, M	B, C, W	F	S	P, R	DAL,MSI,SOA
M55342^10@2#70&	2,700,000	250 (char. E, H) or 500 (char. K, M)	E, H, K, M	B, C, W	T, L, P	S	P, R	DAL,MSI,SOA
M55342^10@2#74&	2,740,000	250 (char. E, H) or 500 (char. K, M)	E, H, K, M	B, C, W	F	S	P, R	DAL,MSI,SOA
M55342^10@2#80&	2,800,000	250 (char. E, H) or 500 (char. K, M)	E, H, K, M	B, C, W	F	S	P, R	DAL,MSI,SOA
M55342^10@2#87&	2,870,000	250 (char. E, H) or 500 (char. K, M)	E, H, K, M	B, C, W	F	S	P, R	DAL,MSI,SOA
M55342^10@2#94&	2,940,000	250 (char. E, H) or 500 (char. K, M)	E, H, K, M	B, C, W	F	S	P, R	DAL,MSI,SOA
M55342^10@3#00&	3,000,000	250 (char. E, H) or 500 (char. K, M)	E, H, K, M	B, C, W	T, L	S	P, R	DAL,MSI,SOA
M55342^10@3#01&	3,010,000	250 (char. E, H) or 500 (char. K, M)	E, H, K, M	B, C, W	F	S	P, R	DAL,MSI,SOA
M55342^10@3#09&	3,090,000	250 (char. E, H) or 500 (char. K, M)	E, H, K, M	B, C, W	F	S	P, R	DAL,MSI,SOA
M55342^10@3#16&	3,160,000	250 (char. E, H) or 500 (char. K, M)	E, H, K, M	B, C, W	F	S	P, R	DAL,MSI,SOA
M55342^10@3#24&	3,240,000	250 (char. E, H) or 500 (char. K, M)	E, H, K, M	B, C, W	F	S	P, R	DAL,MSI,SOA
M55342^10@3#30&	3,300,000	250 (char. E, H) or 500 (char. K, M)	E, H, K, M	B, C, W	T, L, P	S	P, R	DAL,MSI,SOA
M55342^10@3#32&	3,320,000	250 (char. E, H) or 500 (char. K, M)	E, H, K, M	B, C, W	F	S	P, R	DAL,MSI,SOA
M55342^10@3#40&	3,400,000	250 (char. E, H) or 500 (char. K, M)	E, H, K, M	B, C, W	F	S	P, R	DAL,MSI,SOA
M55342^10@3#48&	3,480,000	250 (char. E, H) or 500 (char. K, M)	E, H, K, M	B, C, W	F	S	P, R	DAL,MSI,SOA
M55342^10@3#57&	3,570,000	250 (char. E, H) or 500 (char. K, M)	E, H, K, M	B, C, W	F	S	P, R	DAL,MSI,SOA
M55342^10@3#60&	3,600,000	250 (char. E, H) or 500 (char. K, M)	E, H, K, M	B, C, W	T, L	S	P, R	DAL,MSI,SOA
M55342^10@3#65&	3,650,000	250 (char. E, H) or 500 (char. K, M)	E, H, K, M	B, C, W	F	S	P, R	DAL,MSI,SOA
M55342^10@3#74&	3,740,000	250 (char. E, H) or 500 (char. K, M)	E, H, K, M	B, C, W	F	S	P, R	DAL,MSI,SOA
M55342^10@3#83&	3,830,000	250 (char. E, H) or 500 (char. K, M)	E, H, K, M	B, C, W	F	S	P, R	DAL,MSI,SOA
M55342^10@3#90&	3,900,000	250 (char. E, H) or 500 (char. K, M)	E, H, K, M	B, C, W	T, L, P	S	P, R	DAL,MSI,SOA
M55342^10@3#92&	3,920,000	250 (char. E, H) or 500 (char. K, M)	E, H, K, M	B, C, W	F	S	P, R	DAL,MSI,SOA
M55342^10@4#02&	4,020,000	250 (char. E, H) or 500 (char. K, M)	E, H, K, M	B, C, W	F	S	P, R	DAL,MSI,SOA
M55342^10@4#12&	4,120,000	250 (char. E, H) or 500 (char. K, M)	E, H, K, M	B, C, W	F	S	P, R	DAL,MSI,SOA
M55342^10@4#22&	4,220,000	250 (char. E, H) or 500 (char. K, M)	E, H, K, M	B, C, W	F	S	P, R	DAL,MSI,SOA
M55342^10@4#30&	4,300,000	250 (char. E, H) or 500 (char. K, M)	E, H, K, M	B, C, W	T, L	S	P, R	DAL,MSI,SOA
M55342^10@4#32&	4,320,000	250 (char. E, H) or 500 (char. K, M)	E, H, K, M	B, C, W	F	S	P, R	DAL,MSI,SOA
M55342^10@4#42&	4,420,000	250 (char. E, H) or 500 (char. K, M)	E, H, K, M	B, C, W	F	S	P, R	DAL,MSI,SOA

M55342^10@4#53&	4,530,000	250 (char. E, H) or 500 (char. K, M)	E, H, K, M	B, C, W	F	S	P, R	DAL,MSI,SOA
M55342^10@4#64&	4,640,000	250 (char. E, H) or 500 (char. K, M)	E, H, K, M	B, C, W	F	S	P, R	DAL,MSI,SOA
M55342^10@4#70&	4,700,000	250 (char. E, H) or 500 (char. K, M)	E, H, K, M	B, C, W	T, L, P	S	P, R	DAL,MSI,SOA
M55342^10@4#75&	4,750,000	250 (char. E, H) or 500 (char. K, M)	E, H, K, M	B, C, W	F	S	P, R	DAL,MSI,SOA
M55342^10@4#87&	4,870,000	250 (char. E, H) or 500 (char. K, M)	E, H, K, M	B, C, W	F	S	P, R	DAL,MSI,SOA
M55342^10@4#99&	4,990,000	250 (char. E, H) or 500 (char. K, M)	E, H, K, M	B, C, W	F	S	P, R	DAL,MSI,SOA
M55342^10@5#10&	5,100,000	250 (char. E, H) or 500 (char. K, M)	E, H, K, M	B, C, W	T, L	S	P, R	DAL,MSI,SOA
M55342^10@5#11&	5,110,000	250 (char. E, H) or 500 (char. K, M)	E, H, K, M	B, C, W	F	S	P, R	DAL,MSI,SOA
M55342^10@5#23&	5,230,000	250 (char. E, H) or 500 (char. K, M)	E, H, K, M	B, C, W	F	S	P, R	DAL,MSI,SOA
M55342^10@5#36&	5,360,000	250 (char. E, H) or 500 (char. K, M)	E, H, K, M	B, C, W	F	S	P, R	DAL,MSI,SOA
M55342^10@5#49&	5,490,000	250 (char. E, H) or 500 (char. K, M)	E, H, K, M	B, C, W	F	S	P, R	DAL,MSI,SOA
M55342^10@5#60&	5,600,000	250 (char. E, H) or 500 (char. K, M)	E, H, K, M	B, C, W	T, L, P	S	P, R	DAL,MSI,SOA
M55342^10@5#62&	5,620,000	250 (char. E, H) or 500 (char. K, M)	E, H, K, M	B, C, W	F	S	P, R	DAL,MSI

RM1010 RESISTORS

DECADE BREAKDOWN

Click on the link below to see the associated parts selection listing:

Resistance Range
5.49 Ohms through 9.76 Ohms
10.0 Ohms through 97.6 Ohms
100 Ohms through 976 Ohms
1,000 Ohms through 9,760 Ohms
10,000 Ohms through 97,600 Ohms
100,000 Ohms through 976,000 Ohms
1,000,000 Ohms through 5,620,000 Ohms

MIL-PRF-55342/10 (RM1010) Film Chip Resistors: 5.49 Ohms Through 9.76 Ohms

	Resistance	Power	Char.	Term.	Res. Tol./	Level 1	Level 2	
Part Number	Value (Ohms)	Rating (mW)	(^)	Type (@)	Multiplier (#)	FRL (&)	FRL (&)	Manufacturer
M55342^10@5#49&	5.49	250 (char. E, H) or 500 (char. K, M)	E, H, K, M	B, C, W	D	S, T	P, R	DAL
M55342^10@5#60&	5.60	250 (char. E, H) or 500 (char. K, M)	E, H, K, M	B, C, W	G, J, M	S, T	P, R	DAL,SOA
M55342^10@5#62&	5.62	250 (char. E, H) or 500 (char. K, M)	E, H, K, M	B, C, W	D	S, T	P, R	DAL,MSI,SOA
M55342^10@5#76&	5.76	250 (char. E, H) or 500 (char. K, M)	E, H, K, M	B, C, W	D	S, T	P, R	DAL,MSI,SOA
M55342^10@5#90&	5.90	250 (char. E, H) or 500 (char. K, M)	E, H, K, M	B, C, W	D	S, T	P, R	DAL,MSI,SOA
M55342^10@6#04&	6.04	250 (char. E, H) or 500 (char. K, M)	E, H, K, M	B, C, W	D	S, T	P, R	DAL,MSI,SOA
M55342^10@6#19&	6.19	250 (char. E, H) or 500 (char. K, M)	E, H, K, M	B, C, W	D	S, T	P, R	DAL,MSI,SOA
M55342^10@6#20&	6.20	250 (char. E, H) or 500 (char. K, M)	E, H, K, M	B, C, W	G, J	S, T	P, R	DAL,MSI,SOA
M55342^10@6#34&	6.34	250 (char. E, H) or 500 (char. K, M)	E, H, K, M	B, C, W	D	S, T	P, R	DAL,MSI,SOA
M55342^10@6#49&	6.49	250 (char. E, H) or 500 (char. K, M)	E, H, K, M	B, C, W	D	S, T	P, R	DAL,MSI,SOA
	Resistance	Power	Char.	Term.	Res. Tol./	Level 1	Level 2	
Part Number	Value (Ohms)	Rating (mW)	(^)	Type (@)	Multiplier (#)	FRL (&)	FRL (&)	Manufacturer
M55342^10@6#65&	6.65	250 (char. E, H) or 500 (char. K, M)	E, H, K, M	B, C, W	D	S, T	P, R	DAL,MSI,SOA

M55342^10@6#80&	6.80	250 (char. E, H) or 500 (char. K, M)	E, H, K, M	B, C, W	G, J, M	S, T	P, R	DAL,MSI,SOA
M55342^10@6#81&	6.81	250 (char. E, H) or 500 (char. K, M)	E, H, K, M	B, C, W	D	S, T	P, R	DAL,MSI,SOA
M55342^10@6#98&	6.98	250 (char. E, H) or 500 (char. K, M)	E, H, K, M	B, C, W	D	S, T	P, R	DAL,MSI,SOA
M55342^10@7#15&	7.15	250 (char. E, H) or 500 (char. K, M)	E, H, K, M	B, C, W	D	S, T	P, R	DAL,MSI,SOA
M55342^10@7#32&	7.32	250 (char. E, H) or 500 (char. K, M)	E, H, K, M	B, C, W	D	S, T	P, R	DAL,MSI,SOA
M55342^10@7#50&	7.50	250 (char. E, H) or 500 (char. K, M)	E, H, K, M	B, C, W	D, G, J	S, T	P, R	DAL,MSI,SOA
M55342^10@7#68&	7.68	250 (char. E, H) or 500 (char. K, M)	E, H, K, M	B, C, W	D	S, T	P, R	DAL,MSI,SOA
M55342^10@7#87&	7.87	250 (char. E, H) or 500 (char. K, M)	E, H, K, M	B, C, W	D	S, T	P, R	DAL,MSI,SOA
	Resistance	Power	Char.	Term.	Res. Tol./	Level 1	Level 2	
Part Number	Value (Ohms)	Rating (mW)	(^)	Type (@)	Multiplier (#)	FRL (&)	FRL (&)	Manufacturer
M55342^10@8#06&	8.06	250 (char. E, H) or 500 (char. K, M)	E, H, K, M	B, C, W	D	S, T	P, R	DAL,MSI,SOA
M55342^10@8#20&	8.20	250 (char. E, H) or 500 (char. K, M)	E, H, K, M	B, C, W	G, J, M	S, T	P, R	DAL,MSI,SOA
M55342^10@8#25&	8.25	250 (char. E, H) or 500 (char. K, M)	E, H, K, M	B, C, W	D	S, T	P, R	DAL,MSI,SOA
M55342^10@8#45&	8.45	250 (char. E, H) or 500 (char. K, M)	E, H, K, M	B, C, W	D	S, T	P, R	DAL,MSI,SOA
M55342^10@8#66&	8.66	250 (char. E, H) or 500 (char. K, M)	E, H, K, M	B, C, W	D	S, T	P, R	DAL,MSI,SOA
M55342^10@8#87&	8.87	250 (char. E, H) or 500 (char. K, M)	E, H, K, M	B, C, W	D	S, T	P, R	DAL,MSI,SOA
M55342^10@9#09&	9.09	250 (char. E, H) or 500 (char. K, M)	E, H, K, M	B, C, W	D	S, T	P, R	DAL,MSI,SOA
M55342^10@9#10&	9.10	250 (char. E, H) or 500 (char. K, M)	E, H, K, M	B, C, W	G, J	S, T	P, R	DAL,MSI,SOA
M55342^10@9#31&	9.31	250 (char. E, H) or 500 (char. K, M)	E, H, K, M	B, C, W	D	S, T	P, R	DAL,MSI,SOA
M55342^10@9#53&	9.53	250 (char. E, H) or 500 (char. K, M)	E, H, K, M	B, C, W	D	S, T	P, R	DAL,MSI,SOA
M55342^10@9#76&	9.76	250 (char. E, H) or 500 (char. K, M)	E, H, K, M	B, C, W	D	S, T	P, R	DAL,MSI,SOA
	Resistance	Power	Char.	Term.	Res. Tol./	Level 1	Level 2	
Part Number	Value (Ohms)	Rating (mW)	(^)	Type (@)	Multiplier (#)	FRL (&)	FRL (&)	Manufacturer

MIL-PRF-55342/10 (RM1010) Film Chip Resistors: 10.0 Ohms Through 97.6 Ohms

	Resistance	Power	Char.	Term.	Res. Tol./	Level 1	Level 2	
Part Number	Value (Ohms)	Rating (mW)	(^)	Type (@)	Multiplier (#)	FRL (&)	FRL (&)	Manufacturer
M55342^10@10#0&	10.0	250 (char. E, H) or 500 (char. K, M)	E, H, K, M	B, C, W	D, G, J, M	S, T	P, R	DAL,MSI,SOA
M55342^10@10#2&	10.2	250 (char. E, H) or 500 (char. K, M)	E, H, K, M	B, C, W	D	S, T	P, R	DAL,MSI,SOA
M55342^10@10#5&	10.5	250 (char. E, H) or 500 (char. K, M)	E, H, K, M	B, C, W	D	S, T	P, R	DAL,MSI,SOA
M55342^10@10#7&	10.7	250 (char. E, H) or 500 (char. K, M)	E, H, K, M	B, C, W	D	S, T	P, R	DAL,MSI,SOA
M55342^10@11#0&	11.0	250 (char. E, H) or 500 (char. K, M)	E, H, K, M	B, C, W	D, G, J	S, T	P, R	DAL,MSI,SOA
M55342^10@11#3&	11.3	250 (char. E, H) or 500 (char. K, M)	E, H, K, M	B, C, W	D	S, T	P, R	DAL,MSI,SOA
M55342^10@11#5&	11.5	250 (char. E, H) or 500 (char. K, M)	E, H, K, M	B, C, W	D	S, T	P, R	DAL,MSI,SOA
M55342^10@11#8&	11.8	250 (char. E, H) or 500 (char. K, M)	E, H, K, M	B, C, W	D	S, T	P, R	DAL,MSI,SOA
M55342^10@12#0&	12.0	250 (char. E, H) or 500 (char. K, M)	E, H, K, M	B, C, W	G, J, M	S, T	P, R	DAL,MSI,SOA
M55342^10@12#1&	12.1	250 (char. E, H) or 500 (char. K, M)	E, H, K, M	B, C, W	D	S, T	P, R	DAL,MSI,SOA
	Resistance	Power	Char.	Term.	Res. Tol./	Level 1	Level 2	
Part Number	Value (Ohms)	Rating (mW)	(^)	Type (@)	Multiplier (#)	FRL (&)	FRL (&)	Manufacturer
M55342^10@12#4&	12.4	250 (char. E, H) or 500 (char. K, M)	E, H, K, M	B, C, W	D	S, T	P, R	DAL,MSI,SOA
M55342^10@12#7&	12.7	250 (char. E, H) or 500 (char. K, M)	E, H, K, M	B, C, W	D	S, T	P, R	DAL,MSI,SOA
M55342^10@13#0&	13.0	250 (char. E, H) or 500 (char. K, M)	E, H, K, M	B, C, W	D, G, J	S, T	P, R	DAL,MSI,SOA
M55342^10@13#3&	13.3	250 (char. E, H) or 500 (char. K, M)	E, H, K, M	B, C, W	D	S, T	P, R	DAL,MSI,SOA
M55342^10@13#7&	13.7	250 (char. E, H) or 500 (char. K, M)	E, H, K, M	B, C, W	D	S, T	P, R	DAL,MSI,SOA

M55342^10@14#0&	14.0	250 (char. E, H) or 500 (char. K, M)	E, H, K, M	B, C, W	D	S, T	P, R	DAL,MSI,SOA
M55342^10@14#3&	14.3	250 (char. E, H) or 500 (char. K, M)	E, H, K, M	B, C, W	D	S, T	P, R	DAL,MSI,SOA
M55342^10@14#7&	14.7	250 (char. E, H) or 500 (char. K, M)	E, H, K, M	B, C, W	D	S, T	P, R	DAL,MSI,SOA
M55342^10@15#0&	15.0	250 (char. E, H) or 500 (char. K, M)	E, H, K, M	B, C, W	D, G, J, M	S, T	P, R	DAL,MSI,SOA
	Resistance	Power	Char.	Term.	Res. Tol./	Level 1	Level 2	
Part Number	Value (Ohms)	Rating (mW)	(^)	Type (@)	Multiplier (#)	FRL (&)	FRL (&)	Manufacturer
M55342^10@15#4&	15.4	250 (char. E, H) or 500 (char. K, M)	E, H, K, M	B, C, W	D	S, T	P, R	DAL,MSI,SOA
M55342^10@15#8&	15.8	250 (char. E, H) or 500 (char. K, M)	E, H, K, M	B, C, W	D	S, T	P, R	DAL,MSI,SOA
M55342^10@16#0&	16.0	250 (char. E, H) or 500 (char. K, M)	E, H, K, M	B, C, W	G, J	S, T	P, R	DAL,MSI,SOA
M55342^10@16#2&	16.2	250 (char. E, H) or 500 (char. K, M)	E, H, K, M	B, C, W	D	S, T	P, R	DAL,MSI,SOA
M55342^10@16#5&	16.5	250 (char. E, H) or 500 (char. K, M)	E, H, K, M	B, C, W	D	S, T	P, R	DAL,MSI,SOA
M55342^10@16#9&	16.9	250 (char. E, H) or 500 (char. K, M)	E, H, K, M	B, C, W	D	S, T	P, R	DAL,MSI,SOA
M55342^10@17#4&	17.4	250 (char. E, H) or 500 (char. K, M)	E, H, K, M	B, C, W	D	S, T	P, R	DAL,MSI,SOA
M55342^10@17#8&	17.8	250 (char. E, H) or 500 (char. K, M)	E, H, K, M	B, C, W	D	S, T	P, R	DAL,MSI,SOA
M55342^10@18#0&	18.0	250 (char. E, H) or 500 (char. K, M)	E, H, K, M	B, C, W	G, J, M	S, T	P, R	DAL,MSI,SOA
	Resistance	Power	Char.	Term.	Res. Tol./	Level 1	Level 2	
Part Number	Value (Ohms)	Rating (mW)	(^)	Type (@)	Multiplier (#)	FRL (&)	FRL (&)	Manufacturer
M55342^10@18#2&	18.2	250 (char. E, H) or 500 (char. K, M)	E, H, K, M	B, C, W	D	S, T	P, R	DAL,MSI,SOA
M55342^10@18#7&	18.7	250 (char. E, H) or 500 (char. K, M)	E, H, K, M	B, C, W	D	S, T	P, R	DAL,MSI,SOA
M55342^10@19#1&	19.1	250 (char. E, H) or 500 (char. K, M)	E, H, K, M	B, C, W	D	S, T	P, R	DAL,MSI,SOA
M55342^10@19#6&	19.6	250 (char. E, H) or 500 (char. K, M)	E, H, K, M	B, C, W	D	S, T	P, R	DAL,MSI,SOA
M55342^10@20#0&	20.0	250 (char. E, H) or 500 (char. K, M)	E, H, K, M	B, C, W	D, G, J, M	S, T	P, R	DAL,MSI,SOA
M55342^10@20#5&	20.5	250 (char. E, H) or 500 (char. K, M)	E, H, K, M	B, C, W	D	S, T	P, R	DAL,MSI,SOA
M55342^10@21#0&	21.0	250 (char. E, H) or 500 (char. K, M)	E, H, K, M	B, C, W	D	S, T	P, R	DAL,MSI,SOA
M55342^10@21#5&	21.5	250 (char. E, H) or 500 (char. K, M)	E, H, K, M	B, C, W	D	S, T	P, R	DAL,MSI,SOA
M55342^10@22#0&	22.0	250 (char. E, H) or 500 (char. K, M)	E, H, K, M	B, C, W	G, J, M	S, T	P, R	DAL,MSI,SOA
	Resistance	Power	Char.	Term.	Res. Tol./	Level 1	Level 2	
Part Number	Value (Ohms)	Rating (mW)	(^)	Type (@)	Multiplier (#)	FRL (&)	FRL (&)	Manufacturer
M55342^10@22#1&	22.1	250 (char. E, H) or 500 (char. K, M)	E, H, K, M	B, C, W	D	S, T	P, R	DAL,MSI,SOA
M55342^10@22#6&	22.6	250 (char. E, H) or 500 (char. K, M)	E, H, K, M	B, C, W	D	S, T	P, R	DAL,MSI,SOA
M55342^10@23#2&	23.2	250 (char. E, H) or 500 (char. K, M)	E, H, K, M	B, C, W	D	S, T	P, R	DAL,MSI,SOA
M55342^10@23#7&	23.7	250 (char. E, H) or 500 (char. K, M)	E, H, K, M	B, C, W	D	S, T	P, R	DAL,MSI,SOA
M55342^10@24#0&	24.0	250 (char. E, H) or 500 (char. K, M)	E, H, K, M	B, C, W	G, J	S, T	P, R	DAL,MSI,SOA
M55342^10@24#3&	24.3	250 (char. E, H) or 500 (char. K, M)	E, H, K, M	B, C, W	D	S, T	P, R	DAL,MSI,SOA
M55342^10@24#9&	24.9	250 (char. E, H) or 500 (char. K, M)	E, H, K, M	B, C, W	D	S, T	P, R	DAL,MSI,SOA
M55342^10@25#5&	25.5	250 (char. E, H) or 500 (char. K, M)	E, H, K, M	B, C, W	D	S, T	P, R	DAL,MSI,SOA
M55342^10@26#1&	26.1	250 (char. E, H) or 500 (char. K, M)	E, H, K, M	B, C, W	D	S, T	P, R	DAL,MSI,SOA
	Resistance	Power	Char.	Term.	Res. Tol./	Level 1	Level 2	
Part Number	Value (Ohms)	Rating (mW)	(^)	Type (@)	Multiplier (#)	FRL (&)	FRL (&)	Manufacturer
M55342^10@26#7&	26.7	250 (char. E, H) or 500 (char. K, M)	E, H, K, M	B, C, W	D	S, T	P, R	DAL,MSI,SOA
M55342^10@27#0&	27.0	250 (char. E, H) or 500 (char. K, M)	E, H, K, M	B, C, W	G, J, M	S, T	P, R	DAL,MSI,SOA
M55342^10@27#4&	27.4	250 (char. E, H) or 500 (char. K, M)	E, H, K, M	B, C, W	D	S, T	P, R	DAL,MSI,SOA
M55342^10@28#0&	28.0	250 (char. E, H) or 500 (char. K, M)	E, H, K, M	B, C, W	D	S, T	P, R	DAL,MSI,SOA
M55342^10@28#7&	28.7	250 (char. E, H) or 500 (char. K, M)	E, H, K, M	B, C, W	D	S, T	P, R	DAL,MSI,SOA
M55342^10@29#4&	29.4	250 (char. E, H) or 500 (char. K, M)	E, H, K, M	B, C, W	D	S, T	P, R	DAL,MSI,SOA
M55342^10@30#0&	30.0	250 (char. E, H) or 500 (char. K, M)	E, H, K, M	B, C, W	G, J	S, T	P, R	DAL,MSI,SOA
M55342^10@30#1&	30.1	250 (char. E, H) or 500 (char. K, M)	E, H, K, M	B, C, W	D	S, T	P, R	DAL,MSI,SOA

M55342^10@30#9&	30.9	250 (char. E, H) or 500 (char. K, M)	E, H, K, M	B, C, W	D	S, T	P, R	DAL,MSI,SOA
	Resistance	Power	Char.	Term.	Res. Tol./	Level 1	Level 2	
Part Number	Value (Ohms)	Rating (mW)	(^)	Type (@)	Multiplier (#)	FRL (&)	FRL (&)	Manufacturer
M55342^10@31#6&	31.6	250 (char. E, H) or 500 (char. K, M)	E, H, K, M	B, C, W	D	S, T	P, R	DAL,MSI,SOA
M55342^10@32#4&	32.4	250 (char. E, H) or 500 (char. K, M)	E, H, K, M	B, C, W	D	S, T	P, R	DAL,MSI,SOA
M55342^10@33#0&	33.0	250 (char. E, H) or 500 (char. K, M)	E, H, K, M	B, C, W	G, J, M	S, T	P, R	DAL,MSI,SOA
M55342^10@33#2&	33.2	250 (char. E, H) or 500 (char. K, M)	E, H, K, M	B, C, W	D	S, T	P, R	DAL,MSI,SOA
M55342^10@34#0&	34.0	250 (char. E, H) or 500 (char. K, M)	E, H, K, M	B, C, W	D	S, T	P, R	DAL,MSI,SOA
M55342^10@34#8&	34.8	250 (char. E, H) or 500 (char. K, M)	E, H, K, M	B, C, W	D	S, T	P, R	DAL,MSI,SOA
M55342^10@35#7&	35.7	250 (char. E, H) or 500 (char. K, M)	E, H, K, M	B, C, W	D	S, T	P, R	DAL,MSI,SOA
M55342^10@36#0&	36.0	250 (char. E, H) or 500 (char. K, M)	E, H, K, M	B, C, W	G, J	S, T	P, R	DAL,MSI,SOA
M55342^10@36#5&	36.5	250 (char. E, H) or 500 (char. K, M)	E, H, K, M	B, C, W	D	S, T	P, R	DAL,MSI,SOA
	Resistance	Power	Char.	Term.	Res. Tol./	Level 1	Level 2	
Part Number	Value (Ohms)	Rating (mW)	(^)	Type (@)	Multiplier (#)	FRL (&)	FRL (&)	Manufacturer
M55342^10@37#4&	37.4	250 (char. E, H) or 500 (char. K, M)	E, H, K, M	B, C, W	D	S, T	P, R	DAL,MSI,SOA
M55342^10@38#3&	38.3	250 (char. E, H) or 500 (char. K, M)	E, H, K, M	B, C, W	D	S, T	P, R	DAL,MSI,SOA
M55342^10@39#0&	39.0	250 (char. E, H) or 500 (char. K, M)	E, H, K, M	B, C, W	G, J, M	S, T	P, R	DAL,MSI,SOA
M55342^10@39#2&	39.2	250 (char. E, H) or 500 (char. K, M)	E, H, K, M	B, C, W	D	S, T	P, R	DAL,MSI,SOA
M55342^10@40#2&	40.2	250 (char. E, H) or 500 (char. K, M)	E, H, K, M	B, C, W	D	S, T	P, R	DAL,MSI,SOA
M55342^10@41#2&	41.2	250 (char. E, H) or 500 (char. K, M)	E, H, K, M	B, C, W	D	S, T	P, R	DAL,MSI,SOA
M55342^10@42#2&	42.2	250 (char. E, H) or 500 (char. K, M)	E, H, K, M	B, C, W	D	S, T	P, R	DAL,MSI,SOA
M55342^10@43#0&	43.0	250 (char. E, H) or 500 (char. K, M)	E, H, K, M	B, C, W	G, J	S, T	P, R	DAL,MSI,SOA
M55342^10@43#2&	43.2	250 (char. E, H) or 500 (char. K, M)	E, H, K, M	B, C, W	D	S, T	P, R	DAL,MSI,SOA
	Resistance	Power	Char.	Term.	Res. Tol./	Level 1	Level 2	
Part Number	Value (Ohms)	Rating (mW)	(^)	Type (@)	Multiplier (#)	FRL (&)	FRL (&)	Manufacturer
M55342^10@44#2&	44.2	250 (char. E, H) or 500 (char. K, M)	E, H, K, M	B, C, W	D	S, T	P, R	DAL,MSI,SOA
M55342^10@45#3&	45.3	250 (char. E, H) or 500 (char. K, M)	E, H, K, M	B, C, W	D	S, T	P, R	DAL,MSI,SOA
M55342^10@46#4&	46.4	250 (char. E, H) or 500 (char. K, M)	E, H, K, M	B, C, W	D	S, T	P, R	DAL,MSI,SOA
M55342^10@47#0&	47.0	250 (char. E, H) or 500 (char. K, M)	E, H, K, M	B, C, W	G, J, M	S, T	P, R	DAL,MSI,SOA
M55342^10@47#5&	47.5	250 (char. E, H) or 500 (char. K, M)	E, H, K, M	B, C, W	D	S, T	P, R	DAL,MSI,SOA
M55342^10@48#7&	48.7	250 (char. E, H) or 500 (char. K, M)	E, H, K, M	B, C, W	D	S, T	P, R	DAL,MSI,SOA
M55342^10@49#9&	49.9	250 (char. E, H) or 500 (char. K, M)	E, H, K, M	B, C, W	D	S, T	P, R	DAL,MSI,SOA
M55342^10@51#0&	51.0	250 (char. E, H) or 500 (char. K, M)	E, H, K, M	B, C, W	G, J	S, T	P, R	DAL,MSI,SOA
M55342^10@51#1&	51.1	250 (char. E, H) or 500 (char. K, M)	E, H, K, M	B, C, W	D	S, T	P, R	DAL,MSI,SOA
	Resistance	Power	Char.	Term.	Res. Tol./	Level 1	Level 2	
Part Number	Value (Ohms)	Rating (mW)	(^)	Type (@)	Multiplier (#)	FRL (&)	FRL (&)	Manufacturer
M55342^10@52#3&	52.3	250 (char. E, H) or 500 (char. K, M)	E, H, K, M	B, C, W	D	S, T	P, R	DAL,MSI,SOA
M55342^10@53#6&	53.6	250 (char. E, H) or 500 (char. K, M)	E, H, K, M	B, C, W	D	S, T	P, R	DAL,MSI,SOA
M55342^10@54#9&	54.9	250 (char. E, H) or 500 (char. K, M)	E, H, K, M	B, C, W	D	S, T	P, R	DAL,MSI,SOA
M55342^10@56#0&	56.0	250 (char. E, H) or 500 (char. K, M)	E, H, K, M	B, C, W	G, J, M	S, T	P, R	DAL,MSI,SOA
M55342^10@56#2&	56.2	250 (char. E, H) or 500 (char. K, M)	E, H, K, M	B, C, W	D	S, T	P, R	DAL,MSI,SOA
M55342^10@57#6&	57.6	250 (char. E, H) or 500 (char. K, M)	E, H, K, M	B, C, W	D	S, T	P, R	DAL,MSI,SOA
M55342^10@59#0&	59.0	250 (char. E, H) or 500 (char. K, M)	E, H, K, M	B, C, W	D	S, T	P, R	DAL,MSI,SOA
M55342^10@60#4&	60.4	250 (char. E, H) or 500 (char. K, M)	E, H, K, M	B, C, W	D	S, T	P, R	DAL,MSI,SOA
M55342^10@61#9&	61.9	250 (char. E, H) or 500 (char. K, M)	E, H, K, M	B, C, W	D	S, T	P, R	DAL,MSI,SOA
	Resistance	Power	Char.	Term.	Res. Tol./	Level 1	Level 2	
Part Number	Value (Ohms)	Rating (mW)	(^)	Type (@)	Multiplier (#)	FRL (&)	FRL (&)	Manufacturer

M55342^10@62#0&	62.0	250 (char. E, H) or 500 (char. K, M)	E, H, K, M	B, C, W	G, J	S, T	P, R	DAL,MSI,SOA
M55342^10@63#4&	63.4	250 (char. E, H) or 500 (char. K, M)	E, H, K, M	B, C, W	D	S, T	P, R	DAL,MSI,SOA
M55342^10@64#9&	64.9	250 (char. E, H) or 500 (char. K, M)	E, H, K, M	B, C, W	D	S, T	P, R	DAL,MSI,SOA
M55342^10@66#5&	66.5	250 (char. E, H) or 500 (char. K, M)	E, H, K, M	B, C, W	D	S, T	P, R	DAL,MSI,SOA
M55342^10@68#0&	68.0	250 (char. E, H) or 500 (char. K, M)	E, H, K, M	B, C, W	G, J, M	S, T	P, R	DAL,MSI,SOA
M55342^10@68#1&	68.1	250 (char. E, H) or 500 (char. K, M)	E, H, K, M	B, C, W	D	S, T	P, R	DAL,MSI,SOA
M55342^10@69#8&	69.8	250 (char. E, H) or 500 (char. K, M)	E, H, K, M	B, C, W	D	S, T	P, R	DAL,MSI,SOA
M55342^10@71#5&	71.5	250 (char. E, H) or 500 (char. K, M)	E, H, K, M	B, C, W	D	S, T	P, R	DAL,MSI,SOA
M55342^10@73#2&	73.2	250 (char. E, H) or 500 (char. K, M)	E, H, K, M	B, C, W	D	S, T	P, R	DAL,MSI,SOA
	Resistance	Power	Char.	Term.	Res. Tol./	Level 1	Level 2	
Part Number	Value (Ohms)	Rating (mW)	(^)	Type (@)	Multiplier (#)	FRL (&)	FRL (&)	Manufacturer
M55342^10@75#0&	75.0	250 (char. E, H) or 500 (char. K, M)	E, H, K, M	B, C, W	D, G, J	S, T	P, R	DAL,MSI,SOA
M55342^10@76#8&	76.8	250 (char. E, H) or 500 (char. K, M)	E, H, K, M	B, C, W	D	S, T	P, R	DAL,MSI,SOA
M55342^10@78#7&	78.7	250 (char. E, H) or 500 (char. K, M)	E, H, K, M	B, C, W	D	S, T	P, R	DAL,MSI,SOA
M55342^10@80#6&	80.6	250 (char. E, H) or 500 (char. K, M)	E, H, K, M	B, C, W	D	S, T	P, R	DAL,MSI,SOA
M55342^10@82#0&	82.0	250 (char. E, H) or 500 (char. K, M)	E, H, K, M	B, C, W	G, J, M	S, T	P, R	DAL,MSI,SOA
M55342^10@82#5&	82.5	250 (char. E, H) or 500 (char. K, M)	E, H, K, M	B, C, W	D	S, T	P, R	DAL,MSI,SOA
M55342^10@84#5&	84.5	250 (char. E, H) or 500 (char. K, M)	E, H, K, M	B, C, W	D	S, T	P, R	DAL,MSI,SOA
M55342^10@86#6&	86.6	250 (char. E, H) or 500 (char. K, M)	E, H, K, M	B, C, W	D	S, T	P, R	DAL,MSI,SOA
M55342^10@88#7&	88.7	250 (char. E, H) or 500 (char. K, M)	E, H, K, M	B, C, W	D	S, T	P, R	DAL,MSI,SOA
	Resistance	Power	Char.	Term.	Res. Tol./	Level 1	Level 2	
Part Number	Value (Ohms)	Rating (mW)	(^)	Type (@)	Multiplier (#)	FRL (&)	FRL (&)	Manufacturer
M55342^10@90#9&	90.9	250 (char. E, H) or 500 (char. K, M)	E, H, K, M	B, C, W	D	S, T	P, R	DAL,MSI,SOA
M55342^10@91#0&	91.0	250 (char. E, H) or 500 (char. K, M)	E, H, K, M	B, C, W	G, J	S, T	P, R	DAL,MSI,SOA
M55342^10@93#1&	93.1	250 (char. E, H) or 500 (char. K, M)	E, H, K, M	B, C, W	D	S, T	P, R	DAL,MSI,SOA
M55342^10@95#3&	95.3	250 (char. E, H) or 500 (char. K, M)	E, H, K, M	B, C, W	D	S, T	P, R	DAL,MSI,SOA
M55342^10@97#6&	97.6	250 (char. E, H) or 500 (char. K, M)	E, H, K, M	B, C, W	D	S, T	P, R	DAL,MSI,SOA
	Resistance	Power	Char.	Term.	Res. Tol./	Level 1	Level 2	
Part Number	Value (Ohms)	Rating (mW)	(^)	Type (@)	Multiplier (#)	FRL (&)	FRL (&)	Manufacturer

MIL-PRF-55342/10 (RM1010) Film Chip Resistors: 100 Ohms Through 976 Ohms

	Resistance	Power	Char.	Term.	Res. Tol./	Level 1	Level 2	
Part Number	Value (Ohms)	Rating (mW)	(^)	Type (@)	Multiplier (#)	FRL (&)	FRL (&)	Manufacturer
M55342^10@100#&	100	250 (char. E, H) or 500 (char. K, M)	E, H, K, M	B, C, W	D, G, J, M	S, T	P, R	DAL,MSI,SOA
M55342^10@102#&	102	250 (char. E, H) or 500 (char. K, M)	E, H, K, M	B, C, W	D	S, T	P, R	DAL,MSI,SOA
M55342^10@105#&	105	250 (char. E, H) or 500 (char. K, M)	E, H, K, M	B, C, W	D	S, T	P, R	DAL,MSI,SOA
M55342^10@107#&	107	250 (char. E, H) or 500 (char. K, M)	E, H, K, M	B, C, W	D	S, T	P, R	DAL,MSI,SOA
M55342^10@110#&	110	250 (char. E, H) or 500 (char. K, M)	E, H, K, M	B, C, W	D, G, J	S, T	P, R	DAL,MSI,SOA
M55342^10@113#&	113	250 (char. E, H) or 500 (char. K, M)	E, H, K, M	B, C, W	D	S, T	P, R	DAL,MSI,SOA
M55342^10@115#&	115	250 (char. E, H) or 500 (char. K, M)	E, H, K, M	B, C, W	D	S, T	P, R	DAL,MSI,SOA
M55342^10@118#&	118	250 (char. E, H) or 500 (char. K, M)	E, H, K, M	B, C, W	D	S, T	P, R	DAL,MSI,SOA
M55342^10@120#&	120	250 (char. E, H) or 500 (char. K, M)	E, H, K, M	B, C, W	G, J, M	S, T	P, R	DAL,MSI,SOA
M55342^10@121#&	121	250 (char. E, H) or 500 (char. K, M)	E, H, K, M	B, C, W	D	S, T	P, R	DAL,MSI,SOA
	Resistance	Power	Char.	Term.	Res. Tol./	Level 1	Level 2	

Part Number	Value (Ohms)	Rating (mW)	(^)	Type (@)	Multiplier (#)	FRL (&)	FRL (&)	Manufacturer
M55342^10@124#&	124	250 (char. E, H) or 500 (char. K, M)	E, H, K, M	B, C, W	D	S, T	P, R	DAL,MSI,SOA
M55342^10@127#&	127	250 (char. E, H) or 500 (char. K, M)	E, H, K, M	B, C, W	D	S, T	P, R	DAL,MSI,SOA
M55342^10@130#&	130	250 (char. E, H) or 500 (char. K, M)	E, H, K, M	B, C, W	D, G, J	S, T	P, R	DAL,MSI,SOA
M55342^10@133#&	133	250 (char. E, H) or 500 (char. K, M)	E, H, K, M	B, C, W	D	S, T	P, R	DAL,MSI,SOA
M55342^10@137#&	137	250 (char. E, H) or 500 (char. K, M)	E, H, K, M	B, C, W	D	S, T	P, R	DAL,MSI,SOA
M55342^10@140#&	140	250 (char. E, H) or 500 (char. K, M)	E, H, K, M	B, C, W	D	S, T	P, R	DAL,MSI,SOA
M55342^10@143#&	143	250 (char. E, H) or 500 (char. K, M)	E, H, K, M	B, C, W	D	S, T	P, R	DAL,MSI,SOA
M55342^10@147#&	147	250 (char. E, H) or 500 (char. K, M)	E, H, K, M	B, C, W	D	S, T	P, R	DAL,MSI,SOA
M55342^10@150#&	150	250 (char. E, H) or 500 (char. K, M)	E, H, K, M	B, C, W	D, G, J, M	S, T	P, R	DAL,MSI,SOA
	Resistance	Power	Char.	Term.	Res. Tol./	Level 1	Level 2	
Part Number	Value (Ohms)	Rating (mW)	(^)	Type (@)	Multiplier (#)	FRL (&)	FRL (&)	Manufacturer
M55342^10@154#&	154	250 (char. E, H) or 500 (char. K, M)	E, H, K, M	B, C, W	D	S, T	P, R	DAL,MSI,SOA
M55342^10@158#&	158	250 (char. E, H) or 500 (char. K, M)	E, H, K, M	B, C, W	D	S, T	P, R	DAL,MSI,SOA
M55342^10@160#&	160	250 (char. E, H) or 500 (char. K, M)	E, H, K, M	B, C, W	G, J	S, T	P, R	DAL,MSI,SOA
M55342^10@162#&	162	250 (char. E, H) or 500 (char. K, M)	E, H, K, M	B, C, W	D	S, T	P, R	DAL,MSI,SOA
M55342^10@165#&	165	250 (char. E, H) or 500 (char. K, M)	E, H, K, M	B, C, W	D	S, T	P, R	DAL,MSI,SOA
M55342^10@169#&	169	250 (char. E, H) or 500 (char. K, M)	E, H, K, M	B, C, W	D	S, T	P, R	DAL,MSI,SOA
M55342^10@174#&	174	250 (char. E, H) or 500 (char. K, M)	E, H, K, M	B, C, W	D	S, T	P, R	DAL,MSI,SOA
M55342^10@178#&	178	250 (char. E, H) or 500 (char. K, M)	E, H, K, M	B, C, W	D	S, T	P, R	DAL,MSI,SOA
M55342^10@180#&	180	250 (char. E, H) or 500 (char. K, M)	E, H, K, M	B, C, W	G, J, M	S, T	P, R	DAL,MSI,SOA
	Resistance	Power	Char.	Term.	Res. Tol./	Level 1	Level 2	
Part Number	Value (Ohms)	Rating (mW)	(^)	Type (@)	Multiplier (#)	FRL (&)	FRL (&)	Manufacturer
M55342^10@182#&	182	250 (char. E, H) or 500 (char. K, M)	E, H, K, M	B, C, W	D	S, T	P, R	DAL,MSI,SOA
M55342^10@187#&	187	250 (char. E, H) or 500 (char. K, M)	E, H, K, M	B, C, W	D	S, T	P, R	DAL,MSI,SOA
M55342^10@191#&	191	250 (char. E, H) or 500 (char. K, M)	E, H, K, M	B, C, W	D	S, T	P, R	DAL,MSI,SOA
M55342^10@196#&	196	250 (char. E, H) or 500 (char. K, M)	E, H, K, M	B, C, W	D	S, T	P, R	DAL,MSI,SOA
M55342^10@200#&	200	250 (char. E, H) or 500 (char. K, M)	E, H, K, M	B, C, W	D, G, J, M	S, T	P, R	DAL,MSI,SOA
M55342^10@205#&	205	250 (char. E, H) or 500 (char. K, M)	E, H, K, M	B, C, W	D	S, T	P, R	DAL,MSI,SOA
M55342^10@210#&	210	250 (char. E, H) or 500 (char. K, M)	E, H, K, M	B, C, W	D	S, T	P, R	DAL,MSI,SOA
M55342^10@215#&	215	250 (char. E, H) or 500 (char. K, M)	E, H, K, M	B, C, W	D	S, T	P, R	DAL,MSI,SOA
M55342^10@220#&	220	250 (char. E, H) or 500 (char. K, M)	E, H, K, M	B, C, W	G, J, M	S, T	P, R	DAL,MSI,SOA
	Resistance	Power	Char.	Term.	Res. Tol./	Level 1	Level 2	
Part Number	Value (Ohms)	Rating (mW)	(^)	Type (@)	Multiplier (#)	FRL (&)	FRL (&)	Manufacturer
M55342^10@221#&	221	250 (char. E, H) or 500 (char. K, M)	E, H, K, M	B, C, W	D	S, T	P, R	DAL,MSI,SOA
M55342^10@226#&	226	250 (char. E, H) or 500 (char. K, M)	E, H, K, M	B, C, W	D	S, T	P, R	DAL,MSI,SOA
M55342^10@232#&	232	250 (char. E, H) or 500 (char. K, M)	E, H, K, M	B, C, W	D	S, T	P, R	DAL,MSI,SOA
M55342^10@237#&	237	250 (char. E, H) or 500 (char. K, M)	E, H, K, M	B, C, W	D	S, T	P, R	DAL,MSI,SOA
M55342^10@240#&	240	250 (char. E, H) or 500 (char. K, M)	E, H, K, M	B, C, W	G, J	S, T	P, R	DAL,MSI,SOA
M55342^10@243#&	243	250 (char. E, H) or 500 (char. K, M)	E, H, K, M	B, C, W	D	S, T	P, R	DAL,MSI,SOA
M55342^10@249#&	249	250 (char. E, H) or 500 (char. K, M)	E, H, K, M	B, C, W	D	S, T	P, R	DAL,MSI,SOA
M55342^10@255#&	255	250 (char. E, H) or 500 (char. K, M)	E, H, K, M	B, C, W	D	S, T	P, R	DAL,MSI,SOA
M55342^10@261#&	261	250 (char. E, H) or 500 (char. K, M)	E, H, K, M	B, C, W	D	S, T	P, R	DAL,MSI,SOA
	Resistance	Power	Char.	Term.	Res. Tol./	Level 1	Level 2	
Part Number	Value (Ohms)	Rating (mW)	(^)	Type (@)	Multiplier (#)	FRL (&)	FRL (&)	Manufacturer
M55342^10@267#&	267	250 (char. E, H) or 500 (char. K, M)	E, H, K, M	B, C, W	D	S, T	P, R	DAL,MSI,SOA
M55342^10@270#&	270	250 (char. E, H) or 500 (char. K, M)	E, H, K, M	B, C, W	G, J, M	S, T	P, R	DAL,MSI,SOA

M55342^10@274#&	274	250 (char. E, H) or 500 (char. K, M)	E, H, K, M	B, C, W	D	S, T	P, R	DAL,MSI,SOA
M55342^10@280#&	280	250 (char. E, H) or 500 (char. K, M)	E, H, K, M	B, C, W	D	S, T	P, R	DAL,MSI,SOA
M55342^10@287#&	287	250 (char. E, H) or 500 (char. K, M)	E, H, K, M	B, C, W	D	S, T	P, R	DAL,MSI,SOA
M55342^10@294#&	294	250 (char. E, H) or 500 (char. K, M)	E, H, K, M	B, C, W	D	S, T	P, R	DAL,MSI,SOA
M55342^10@300#&	300	250 (char. E, H) or 500 (char. K, M)	E, H, K, M	B, C, W	G, J	S, T	P, R	DAL,MSI,SOA
M55342^10@301#&	301	250 (char. E, H) or 500 (char. K, M)	E, H, K, M	B, C, W	D	S, T	P, R	DAL,MSI,SOA
M55342^10@309#&	309	250 (char. E, H) or 500 (char. K, M)	E, H, K, M	B, C, W	D	S, T	P, R	DAL,MSI,SOA
	Resistance	Power	Char.	Term.	Res. Tol./	Level 1	Level 2	
Part Number	Value (Ohms)	Rating (mW)	(^)	Type (@)	Multiplier (#)	FRL (&)	FRL (&)	Manufacturer
M55342^10@316#&	316	250 (char. E, H) or 500 (char. K, M)	E, H, K, M	B, C, W	D	S, T	P, R	DAL,MSI,SOA
M55342^10@324#&	324	250 (char. E, H) or 500 (char. K, M)	E, H, K, M	B, C, W	D	S, T	P, R	DAL,MSI,SOA
M55342^10@330#&	330	250 (char. E, H) or 500 (char. K, M)	E, H, K, M	B, C, W	G, J, M	S, T	P, R	DAL,MSI,SOA
M55342^10@332#&	332	250 (char. E, H) or 500 (char. K, M)	E, H, K, M	B, C, W	D	S, T	P, R	DAL,MSI,SOA
M55342^10@340#&	340	250 (char. E, H) or 500 (char. K, M)	E, H, K, M	B, C, W	D	S, T	P, R	DAL,MSI,SOA
M55342^10@348#&	348	250 (char. E, H) or 500 (char. K, M)	E, H, K, M	B, C, W	D	S, T	P, R	DAL,MSI,SOA
M55342^10@357#&	357	250 (char. E, H) or 500 (char. K, M)	E, H, K, M	B, C, W	D	S, T	P, R	DAL,MSI,SOA
M55342^10@360#&	360	250 (char. E, H) or 500 (char. K, M)	E, H, K, M	B, C, W	G, J	S, T	P, R	DAL,MSI,SOA
M55342^10@365#&	365	250 (char. E, H) or 500 (char. K, M)	E, H, K, M	B, C, W	D	S, T	P, R	DAL,MSI,SOA
	Resistance	Power	Char.	Term.	Res. Tol./	Level 1	Level 2	
Part Number	Value (Ohms)	Rating (mW)	(^)	Type (@)	Multiplier (#)	FRL (&)	FRL (&)	Manufacturer
M55342^10@374#&	374	250 (char. E, H) or 500 (char. K, M)	E, H, K, M	B, C, W	D	S, T	P, R	DAL,MSI,SOA
M55342^10@383#&	383	250 (char. E, H) or 500 (char. K, M)	E, H, K, M	B, C, W	D	S, T	P, R	DAL,MSI,SOA
M55342^10@390#&	390	250 (char. E, H) or 500 (char. K, M)	E, H, K, M	B, C, W	G, J, M	S, T	P, R	DAL,MSI,SOA
M55342^10@392#&	392	250 (char. E, H) or 500 (char. K, M)	E, H, K, M	B, C, W	D	S, T	P, R	DAL,MSI,SOA
M55342^10@402#&	402	250 (char. E, H) or 500 (char. K, M)	E, H, K, M	B, C, W	D	S, T	P, R	DAL,MSI,SOA
M55342^10@412#&	412	250 (char. E, H) or 500 (char. K, M)	E, H, K, M	B, C, W	D	S, T	P, R	DAL,MSI,SOA
M55342^10@422#&	422	250 (char. E, H) or 500 (char. K, M)	E, H, K, M	B, C, W	D	S, T	P, R	DAL,MSI,SOA
M55342^10@430#&	430	250 (char. E, H) or 500 (char. K, M)	E, H, K, M	B, C, W	G, J	S, T	P, R	DAL,MSI,SOA
M55342^10@432#&	432	250 (char. E, H) or 500 (char. K, M)	E, H, K, M	B, C, W	D	S, T	P, R	DAL,MSI,SOA
	Resistance	Power	Char.	Term.	Res. Tol./	Level 1	Level 2	
Part Number	Value (Ohms)	Rating (mW)	(^)	Type (@)	Multiplier (#)	FRL (&)	FRL (&)	Manufacturer
M55342^10@442#&	442	250 (char. E, H) or 500 (char. K, M)	E, H, K, M	B, C, W	D	S, T	P, R	DAL,MSI,SOA
M55342^10@453#&	453	250 (char. E, H) or 500 (char. K, M)	E, H, K, M	B, C, W	D	S, T	P, R	DAL,MSI,SOA
M55342^10@464#&	464	250 (char. E, H) or 500 (char. K, M)	E, H, K, M	B, C, W	D	S, T	P, R	DAL,MSI,SOA
M55342^10@470#&	470	250 (char. E, H) or 500 (char. K, M)	E, H, K, M	B, C, W	G, J, M	S, T	P, R	DAL,MSI,SOA
M55342^10@475#&	475	250 (char. E, H) or 500 (char. K, M)	E, H, K, M	B, C, W	D	S, T	P, R	DAL,MSI,SOA
M55342^10@487#&	487	250 (char. E, H) or 500 (char. K, M)	E, H, K, M	B, C, W	D	S, T	P, R	DAL,MSI,SOA
M55342^10@499#&	499	250 (char. E, H) or 500 (char. K, M)	E, H, K, M	B, C, W	D	S, T	P, R	DAL,MSI,SOA
M55342^10@510#&	510	250 (char. E, H) or 500 (char. K, M)	E, H, K, M	B, C, W	G, J	S, T	P, R	DAL,MSI,SOA
M55342^10@511#&	511	250 (char. E, H) or 500 (char. K, M)	E, H, K, M	B, C, W	D	S, T	P, R	DAL,MSI,SOA
	Resistance	Power	Char.	Term.	Res. Tol./	Level 1	Level 2	
Part Number	Value (Ohms)	Rating (mW)	(^)	Type (@)	Multiplier (#)	FRL (&)	FRL (&)	Manufacturer
M55342^10@523#&	523	250 (char. E, H) or 500 (char. K, M)	E, H, K, M	B, C, W	D	S, T	P, R	DAL,MSI,SOA
M55342^10@536#&	536	250 (char. E, H) or 500 (char. K, M)	E, H, K, M	B, C, W	D	S, T	P, R	DAL,MSI,SOA
M55342^10@549#&	549	250 (char. E, H) or 500 (char. K, M)	E, H, K, M	B, C, W	D	S, T	P, R	DAL,MSI,SOA
M55342^10@560#&	560	250 (char. E, H) or 500 (char. K, M)	E, H, K, M	B, C, W	G, J, M	S, T	P, R	DAL,MSI,SOA
M55342^10@562#&	562	250 (char. E, H) or 500 (char. K, M)	E, H, K, M	B, C, W	D	S, T	P, R	DAL,MSI,SOA

M55342^10@576#&	576	250 (char. E, H) or 500 (char. K, M)	E, H, K, M	B, C, W	D	S, T	P, R	DAL,MSI,SOA
M55342^10@590#&	590	250 (char. E, H) or 500 (char. K, M)	E, H, K, M	B, C, W	D	S, T	P, R	DAL,MSI,SOA
M55342^10@604#&	604	250 (char. E, H) or 500 (char. K, M)	E, H, K, M	B, C, W	D	S, T	P, R	DAL,MSI,SOA
M55342^10@619#&	619	250 (char. E, H) or 500 (char. K, M)	E, H, K, M	B, C, W	D	S, T	P, R	DAL,MSI,SOA
	Resistance	Power	Char.	Term.	Res. Tol./	Level 1	Level 2	
Part Number	Value (Ohms)	Rating (mW)	(^)	Type (@)	Multiplier (#)	FRL (&)	FRL (&)	Manufacturer
M55342^10@620#&	620	250 (char. E, H) or 500 (char. K, M)	E, H, K, M	B, C, W	G, J	S, T	P, R	DAL,MSI,SOA
M55342^10@634#&	634	250 (char. E, H) or 500 (char. K, M)	E, H, K, M	B, C, W	D	S, T	P, R	DAL,MSI,SOA
M55342^10@649#&	649	250 (char. E, H) or 500 (char. K, M)	E, H, K, M	B, C, W	D	S, T	P, R	DAL,MSI,SOA
M55342^10@665#&	665	250 (char. E, H) or 500 (char. K, M)	E, H, K, M	B, C, W	D	S, T	P, R	DAL,MSI,SOA
M55342^10@680#&	680	250 (char. E, H) or 500 (char. K, M)	E, H, K, M	B, C, W	G, J, M	S, T	P, R	DAL,MSI,SOA
M55342^10@681#&	681	250 (char. E, H) or 500 (char. K, M)	E, H, K, M	B, C, W	D	S, T	P, R	DAL,MSI,SOA
M55342^10@698#&	698	250 (char. E, H) or 500 (char. K, M)	E, H, K, M	B, C, W	D	S, T	P, R	DAL,MSI,SOA
M55342^10@715#&	715	250 (char. E, H) or 500 (char. K, M)	E, H, K, M	B, C, W	D	S, T	P, R	DAL,MSI,SOA
M55342^10@732#&	732	250 (char. E, H) or 500 (char. K, M)	E, H, K, M	B, C, W	D	S, T	P, R	DAL,MSI,SOA
	Resistance	Power	Char.	Term.	Res. Tol./	Level 1	Level 2	
Part Number	Value (Ohms)	Rating (mW)	(^)	Type (@)	Multiplier (#)	FRL (&)	FRL (&)	Manufacturer
M55342^10@750#&	750	250 (char. E, H) or 500 (char. K, M)	E, H, K, M	B, C, W	D, G, J	S, T	P, R	DAL,MSI,SOA
M55342^10@768#&	768	250 (char. E, H) or 500 (char. K, M)	E, H, K, M	B, C, W	D	S, T	P, R	DAL,MSI,SOA
M55342^10@787#&	787	250 (char. E, H) or 500 (char. K, M)	E, H, K, M	B, C, W	D	S, T	P, R	DAL,MSI,SOA
M55342^10@806#&	806	250 (char. E, H) or 500 (char. K, M)	E, H, K, M	B, C, W	D	S, T	P, R	DAL,MSI,SOA
M55342^10@820#&	820	250 (char. E, H) or 500 (char. K, M)	E, H, K, M	B, C, W	G, J, M	S, T	P, R	DAL,MSI,SOA
M55342^10@825#&	825	250 (char. E, H) or 500 (char. K, M)	E, H, K, M	B, C, W	D	S, T	P, R	DAL,MSI,SOA
M55342^10@845#&	845	250 (char. E, H) or 500 (char. K, M)	E, H, K, M	B, C, W	D	S, T	P, R	DAL,MSI,SOA
M55342^10@866#&	866	250 (char. E, H) or 500 (char. K, M)	E, H, K, M	B, C, W	D	S, T	P, R	DAL,MSI,SOA
M55342^10@887#&	887	250 (char. E, H) or 500 (char. K, M)	E, H, K, M	B, C, W	D	S, T	P, R	DAL,MSI,SOA
	Resistance	Power	Char.	Term.	Res. Tol./	Level 1	Level 2	
Part Number	Value (Ohms)	Rating (mW)	(^)	Type (@)	Multiplier (#)	FRL (&)	FRL (&)	Manufacturer
M55342^10@909#&	909	250 (char. E, H) or 500 (char. K, M)	E, H, K, M	B, C, W	D	S, T	P, R	DAL,MSI,SOA
M55342^10@910#&	910	250 (char. E, H) or 500 (char. K, M)	E, H, K, M	B, C, W	G, J	S, T	P, R	DAL,MSI,SOA
M55342^10@931#&	931	250 (char. E, H) or 500 (char. K, M)	E, H, K, M	B, C, W	D	S, T	P, R	DAL,MSI,SOA
M55342^10@953#&	953	250 (char. E, H) or 500 (char. K, M)	E, H, K, M	B, C, W	D	S, T	P, R	DAL,MSI,SOA
M55342^10@976#&	976	250 (char. E, H) or 500 (char. K, M)	E, H, K, M	B, C, W	D	S, T	P, R	DAL,MSI,SOA
	Resistance	Power	Char.	Term.	Res. Tol./	Level 1	Level 2	
Part Number	Value (Ohms)	Rating (mW)	(^)	Type (@)	Multiplier (#)	FRL (&)	FRL (&)	Manufacturer

MIL-PRF-55342/10 (RM1010) Film Chip Resistors: 1,000 Ohms Through 9,760 Ohms

	Resistance	Power	Char.	Term.	Res. Tol./	Level 1	Level 2	
Part Number	Value (Ohms)	Rating (mW)	(^)	Type (@)	Multiplier (#)	FRL (&)	FRL (&)	Manufacturer
M55342^10@1#00&	1,000	250 (char. E, H) or 500 (char. K, M)	E, H, K, M	B, C, W	E, H, K, N	S, T	P, R	DAL,MSI,SOA
M55342^10@1#02&	1,020	250 (char. E, H) or 500 (char. K, M)	E, H, K, M	B, C, W	E	S, T	P, R	DAL,MSI,SOA
M55342^10@1#05&	1,050	250 (char. E, H) or 500 (char. K, M)	E, H, K, M	B, C, W	E	S, T	P, R	DAL,MSI,SOA
M55342^10@1#07&	1,070	250 (char. E, H) or 500 (char. K, M)	E, H, K, M	B, C, W	E	S, T	P, R	DAL,MSI,SOA
M55342^10@1#10&	1,100	250 (char. E, H) or 500 (char. K, M)	E, H, K, M	B, C, W	E, H, K	S, T	P, R	DAL,MSI,SOA

M55342^10@1#13&	1,130	250 (char. E, H) or 500 (char. K, M)	E, H, K, M	B, C, W	E	S, T	P, R	DAL,MSI,SOA
M55342^10@1#15&	1,150	250 (char. E, H) or 500 (char. K, M)	E, H, K, M	B, C, W	E	S, T	P, R	DAL,MSI,SOA
M55342^10@1#18&	1,180	250 (char. E, H) or 500 (char. K, M)	E, H, K, M	B, C, W	E	S, T	P, R	DAL,MSI,SOA
M55342^10@1#20&	1,200	250 (char. E, H) or 500 (char. K, M)	E, H, K, M	B, C, W	H, K, N	S, T	P, R	DAL,MSI,SOA
	Resistance	Power	Char.	Term.	Res. Tol./	Level 1	Level 2	
Part Number	Value (Ohms)	Rating (mW)	(^)	Type (@)	Multiplier (#)	FRL (&)	FRL (&)	Manufacturer
M55342^10@1#21&	1,210	250 (char. E, H) or 500 (char. K, M)	E, H, K, M	B, C, W	E	S, T	P, R	DAL,MSI,SOA
M55342^10@1#24&	1,240	250 (char. E, H) or 500 (char. K, M)	E, H, K, M	B, C, W	E	S, T	P, R	DAL,MSI,SOA
M55342^10@1#27&	1,270	250 (char. E, H) or 500 (char. K, M)	E, H, K, M	B, C, W	E	S, T	P, R	DAL,MSI,SOA
M55342^10@1#30&	1,300	250 (char. E, H) or 500 (char. K, M)	E, H, K, M	B, C, W	E, H, K	S, T	P, R	DAL,MSI,SOA
M55342^10@1#33&	1,330	250 (char. E, H) or 500 (char. K, M)	E, H, K, M	B, C, W	E	S, T	P, R	DAL,MSI,SOA
M55342^10@1#37&	1,370	250 (char. E, H) or 500 (char. K, M)	E, H, K, M	B, C, W	E	S, T	P, R	DAL,MSI,SOA
M55342^10@1#40&	1,400	250 (char. E, H) or 500 (char. K, M)	E, H, K, M	B, C, W	E	S, T	P, R	DAL,MSI,SOA
M55342^10@1#43&	1,430	250 (char. E, H) or 500 (char. K, M)	E, H, K, M	B, C, W	E	S, T	P, R	DAL,MSI,SOA
M55342^10@1#47&	1,470	250 (char. E, H) or 500 (char. K, M)	E, H, K, M	B, C, W	E	S, T	P, R	DAL,MSI,SOA
	Resistance	Power	Char.	Term.	Res. Tol./	Level 1	Level 2	
Part Number	Value (Ohms)	Rating (mW)	(^)	Type (@)	Multiplier (#)	FRL (&)	FRL (&)	Manufacturer
M55342^10@1#50&	1,500	250 (char. E, H) or 500 (char. K, M)	E, H, K, M	B, C, W	E, H, K, N	S, T	P, R	DAL,MSI,SOA
M55342^10@1#54&	1,540	250 (char. E, H) or 500 (char. K, M)	E, H, K, M	B, C, W	E	S, T	P, R	DAL,MSI,SOA
M55342^10@1#58&	1,580	250 (char. E, H) or 500 (char. K, M)	E, H, K, M	B, C, W	E	S, T	P, R	DAL,MSI,SOA
M55342^10@1#60&	1,600	250 (char. E, H) or 500 (char. K, M)	E, H, K, M	B, C, W	H, K	S, T	P, R	DAL,MSI,SOA
M55342^10@1#62&	1,620	250 (char. E, H) or 500 (char. K, M)	E, H, K, M	B, C, W	E	S, T	P, R	DAL,MSI,SOA
M55342^10@1#65&	1,650	250 (char. E, H) or 500 (char. K, M)	E, H, K, M	B, C, W	E	S, T	P, R	DAL,MSI,SOA
M55342^10@1#69&	1,690	250 (char. E, H) or 500 (char. K, M)	E, H, K, M	B, C, W	E	S, T	P, R	DAL,MSI,SOA
M55342^10@1#74&	1,740	250 (char. E, H) or 500 (char. K, M)	E, H, K, M	B, C, W	E	S, T	P, R	DAL,MSI,SOA
M55342^10@1#78&	1,780	250 (char. E, H) or 500 (char. K, M)	E, H, K, M	B, C, W	E	S, T	P, R	DAL,MSI,SOA
	Resistance	Power	Char.	Term.	Res. Tol./	Level 1	Level 2	
Part Number	Value (Ohms)	Rating (mW)	(^)	Type (@)	Multiplier (#)	FRL (&)	FRL (&)	Manufacturer
M55342^10@1#80&	1,800	250 (char. E, H) or 500 (char. K, M)	E, H, K, M	B, C, W	H, K, N	S, T	P, R	DAL,MSI,SOA
M55342^10@1#82&	1,820	250 (char. E, H) or 500 (char. K, M)	E, H, K, M	B, C, W	E	S, T	P, R	DAL,MSI,SOA
M55342^10@1#87&	1,870	250 (char. E, H) or 500 (char. K, M)	E, H, K, M	B, C, W	E	S, T	P, R	DAL,MSI,SOA
M55342^10@1#91&	1,910	250 (char. E, H) or 500 (char. K, M)	E, H, K, M	B, C, W	E	S, T	P, R	DAL,MSI,SOA
M55342^10@1#96&	1,960	250 (char. E, H) or 500 (char. K, M)	E, H, K, M	B, C, W	E	S, T	P, R	DAL,MSI,SOA
M55342^10@2#00&	2,000	250 (char. E, H) or 500 (char. K, M)	E, H, K, M	B, C, W	E, H, K, N	S, T	P, R	DAL,MSI,SOA
M55342^10@2#05&	2,050	250 (char. E, H) or 500 (char. K, M)	E, H, K, M	B, C, W	E	S, T	P, R	DAL,MSI,SOA
M55342^10@2#10&	2,100	250 (char. E, H) or 500 (char. K, M)	E, H, K, M	B, C, W	E	S, T	P, R	DAL,MSI,SOA
M55342^10@2#15&	2,150	250 (char. E, H) or 500 (char. K, M)	E, H, K, M	B, C, W	E	S, T	P, R	DAL,MSI,SOA
	Resistance	Power	Char.	Term.	Res. Tol./	Level 1	Level 2	
Part Number	Value (Ohms)	Rating (mW)	(^)	Type (@)	Multiplier (#)	FRL (&)	FRL (&)	Manufacturer
M55342^10@2#20&	2,200	250 (char. E, H) or 500 (char. K, M)	E, H, K, M	B, C, W	H, K, N	S, T	P, R	DAL,MSI,SOA
M55342^10@2#21&	2,210	250 (char. E, H) or 500 (char. K, M)	E, H, K, M	B, C, W	E	S, T	P, R	DAL,MSI,SOA
M55342^10@2#26&	2,260	250 (char. E, H) or 500 (char. K, M)	E, H, K, M	B, C, W	E	S, T	P, R	DAL,MSI,SOA
M55342^10@2#32&	2,320	250 (char. E, H) or 500 (char. K, M)	E, H, K, M	B, C, W	E	S, T	P, R	DAL,MSI,SOA
M55342^10@2#37&	2,370	250 (char. E, H) or 500 (char. K, M)	E, H, K, M	B, C, W	E	S, T	P, R	DAL,MSI,SOA
M55342^10@2#40&	2,400	250 (char. E, H) or 500 (char. K, M)	E, H, K, M	B, C, W	H, K	S, T	P, R	DAL,MSI,SOA
M55342^10@2#43&	2,430	250 (char. E, H) or 500 (char. K, M)	E, H, K, M	B, C, W	E	S, T	P, R	DAL,MSI,SOA
M55342^10@2#49&	2,490	250 (char. E, H) or 500 (char. K, M)	E, H, K, M	B, C, W	E	S, T	P, R	DAL,MSI,SOA

M55342^10@2#55&	2,550	250 (char. E, H) or 500 (char. K, M)	E, H, K, M	B, C, W	E	S, T	P, R	DAL,MSI,SOA
	Resistance	Power	Char.	Term.	Res. Tol./	Level 1	Level 2	
Part Number	Value (Ohms)	Rating (mW)	(^)	Type (@)	Multiplier (#)	FRL (&)	FRL (&)	Manufacturer
M55342^10@2#61&	2,610	250 (char. E, H) or 500 (char. K, M)	E, H, K, M	B, C, W	E	S, T	P, R	DAL,MSI,SOA
M55342^10@2#67&	2,670	250 (char. E, H) or 500 (char. K, M)	E, H, K, M	B, C, W	E	S, T	P, R	DAL,MSI,SOA
M55342^10@2#70&	2,700	250 (char. E, H) or 500 (char. K, M)	E, H, K, M	B, C, W	H, K, N	S, T	P, R	DAL,MSI,SOA
M55342^10@2#74&	2,740	250 (char. E, H) or 500 (char. K, M)	E, H, K, M	B, C, W	E	S, T	P, R	DAL,MSI,SOA
M55342^10@2#80&	2,800	250 (char. E, H) or 500 (char. K, M)	E, H, K, M	B, C, W	E	S, T	P, R	DAL,MSI,SOA
M55342^10@2#87&	2,870	250 (char. E, H) or 500 (char. K, M)	E, H, K, M	B, C, W	E	S, T	P, R	DAL,MSI,SOA
M55342^10@2#94&	2,940	250 (char. E, H) or 500 (char. K, M)	E, H, K, M	B, C, W	E	S, T	P, R	DAL,MSI,SOA
M55342^10@3#00&	3,000	250 (char. E, H) or 500 (char. K, M)	E, H, K, M	B, C, W	H, K	S, T	P, R	DAL,MSI,SOA
M55342^10@3#01&	3,010	250 (char. E, H) or 500 (char. K, M)	E, H, K, M	B, C, W	E	S, T	P, R	DAL,MSI,SOA
	Resistance	Power	Char.	Term.	Res. Tol./	Level 1	Level 2	
Part Number	Value (Ohms)	Rating (mW)	(^)	Type (@)	Multiplier (#)	FRL (&)	FRL (&)	Manufacturer
M55342^10@3#09&	3,090	250 (char. E, H) or 500 (char. K, M)	E, H, K, M	B, C, W	E	S, T	P, R	DAL,MSI,SOA
M55342^10@3#16&	3,160	250 (char. E, H) or 500 (char. K, M)	E, H, K, M	B, C, W	E	S, T	P, R	DAL,MSI,SOA
M55342^10@3#24&	3,240	250 (char. E, H) or 500 (char. K, M)	E, H, K, M	B, C, W	E	S, T	P, R	DAL,MSI,SOA
M55342^10@3#30&	3,300	250 (char. E, H) or 500 (char. K, M)	E, H, K, M	B, C, W	H, K, N	S, T	P, R	DAL,MSI,SOA
M55342^10@3#32&	3,320	250 (char. E, H) or 500 (char. K, M)	E, H, K, M	B, C, W	E	S, T	P, R	DAL,MSI,SOA
M55342^10@3#40&	3,400	250 (char. E, H) or 500 (char. K, M)	E, H, K, M	B, C, W	E	S, T	P, R	DAL,MSI,SOA
M55342^10@3#48&	3,480	250 (char. E, H) or 500 (char. K, M)	E, H, K, M	B, C, W	E	S, T	P, R	DAL,MSI,SOA
M55342^10@3#57&	3,570	250 (char. E, H) or 500 (char. K, M)	E, H, K, M	B, C, W	E	S, T	P, R	DAL,MSI,SOA
M55342^10@3#60&	3,600	250 (char. E, H) or 500 (char. K, M)	E, H, K, M	B, C, W	H, K	S, T	P, R	DAL,MSI,SOA
	Resistance	Power	Char.	Term.	Res. Tol./	Level 1	Level 2	
Part Number	Value (Ohms)	Rating (mW)	(^)	Type (@)	Multiplier (#)	FRL (&)	FRL (&)	Manufacturer
M55342^10@3#65&	3,650	250 (char. E, H) or 500 (char. K, M)	E, H, K, M	B, C, W	E	S, T	P, R	DAL,MSI,SOA
M55342^10@3#74&	3,740	250 (char. E, H) or 500 (char. K, M)	E, H, K, M	B, C, W	E	S, T	P, R	DAL,MSI,SOA
M55342^10@3#83&	3,830	250 (char. E, H) or 500 (char. K, M)	E, H, K, M	B, C, W	E	S, T	P, R	DAL,MSI,SOA
M55342^10@3#90&	3,900	250 (char. E, H) or 500 (char. K, M)	E, H, K, M	B, C, W	H, K, N	S, T	P, R	DAL,MSI,SOA
M55342^10@3#92&	3,920	250 (char. E, H) or 500 (char. K, M)	E, H, K, M	B, C, W	E	S, T	P, R	DAL,MSI,SOA
M55342^10@4#02&	4,020	250 (char. E, H) or 500 (char. K, M)	E, H, K, M	B, C, W	E	S, T	P, R	DAL,MSI,SOA
M55342^10@4#12&	4,120	250 (char. E, H) or 500 (char. K, M)	E, H, K, M	B, C, W	E	S, T	P, R	DAL,MSI,SOA
M55342^10@4#22&	4,220	250 (char. E, H) or 500 (char. K, M)	E, H, K, M	B, C, W	E	S, T	P, R	DAL,MSI,SOA
M55342^10@4#30&	4,300	250 (char. E, H) or 500 (char. K, M)	E, H, K, M	B, C, W	H, K	S, T	P, R	DAL,MSI,SOA
	Resistance	Power	Char.	Term.	Res. Tol./	Level 1	Level 2	
Part Number	Value (Ohms)	Rating (mW)	(^)	Type (@)	Multiplier (#)	FRL (&)	FRL (&)	Manufacturer
M55342^10@4#32&	4,320	250 (char. E, H) or 500 (char. K, M)	E, H, K, M	B, C, W	E	S, T	P, R	DAL,MSI,SOA
M55342^10@4#42&	4,420	250 (char. E, H) or 500 (char. K, M)	E, H, K, M	B, C, W	E	S, T	P, R	DAL,MSI,SOA
M55342^10@4#53&	4,530	250 (char. E, H) or 500 (char. K, M)	E, H, K, M	B, C, W	E	S, T	P, R	DAL,MSI,SOA
M55342^10@4#64&	4,640	250 (char. E, H) or 500 (char. K, M)	E, H, K, M	B, C, W	E	S, T	P, R	DAL,MSI,SOA
M55342^10@4#70&	4,700	250 (char. E, H) or 500 (char. K, M)	E, H, K, M	B, C, W	H, K, N	S, T	P, R	DAL,MSI,SOA
M55342^10@4#75&	4,750	250 (char. E, H) or 500 (char. K, M)	E, H, K, M	B, C, W	E	S, T	P, R	DAL,MSI,SOA
M55342^10@4#87&	4,870	250 (char. E, H) or 500 (char. K, M)	E, H, K, M	B, C, W	E	S, T	P, R	DAL,MSI,SOA
M55342^10@4#99&	4,990	250 (char. E, H) or 500 (char. K, M)	E, H, K, M	B, C, W	E	S, T	P, R	DAL,MSI,SOA
M55342^10@5#10&	5,100	250 (char. E, H) or 500 (char. K, M)	E, H, K, M	B, C, W	H, K	S, T	P, R	DAL,MSI,SOA
	Resistance	Power	Char.	Term.	Res. Tol./	Level 1	Level 2	
Part Number	Value (Ohms)	Rating (mW)	(^)	Type (@)	Multiplier (#)	FRL (&)	FRL (&)	Manufacturer

M55342^10@5#11&	5,110	250 (char. E, H) or 500 (char. K, M)	E, H, K, M	B, C, W	E	S, T	P, R	DAL,MSI,SOA
M55342^10@5#23&	5,230	250 (char. E, H) or 500 (char. K, M)	E, H, K, M	B, C, W	E	S, T	P, R	DAL,MSI,SOA
M55342^10@5#36&	5,360	250 (char. E, H) or 500 (char. K, M)	E, H, K, M	B, C, W	E	S, T	P, R	DAL,MSI,SOA
M55342^10@5#49&	5,490	250 (char. E, H) or 500 (char. K, M)	E, H, K, M	B, C, W	E	S, T	P, R	DAL,MSI,SOA
M55342^10@5#60&	5,600	250 (char. E, H) or 500 (char. K, M)	E, H, K, M	B, C, W	H, K, N	S, T	P, R	DAL,MSI,SOA
M55342^10@5#62&	5,620	250 (char. E, H) or 500 (char. K, M)	E, H, K, M	B, C, W	E	S, T	P, R	DAL,MSI,SOA
M55342^10@5#76&	5,760	250 (char. E, H) or 500 (char. K, M)	E, H, K, M	B, C, W	E	S, T	P, R	DAL,MSI,SOA
M55342^10@5#90&	5,900	250 (char. E, H) or 500 (char. K, M)	E, H, K, M	B, C, W	E	S, T	P, R	DAL,MSI,SOA
M55342^10@6#04&	6,040	250 (char. E, H) or 500 (char. K, M)	E, H, K, M	B, C, W	E	S, T	P, R	DAL,MSI,SOA
	Resistance	Power	Char.	Term.	Res. Tol./	Level 1	Level 2	
Part Number	Value (Ohms)	Rating (mW)	(^)	Type (@)	Multiplier (#)	FRL (&)	FRL (&)	Manufacturer
M55342^10@6#19&	6,190	250 (char. E, H) or 500 (char. K, M)	E, H, K, M	B, C, W	E	S, T	P, R	DAL,MSI,SOA
M55342^10@6#20&	6,200	250 (char. E, H) or 500 (char. K, M)	E, H, K, M	B, C, W	H, K	S, T	P, R	DAL,MSI,SOA
M55342^10@6#34&	6,340	250 (char. E, H) or 500 (char. K, M)	E, H, K, M	B, C, W	E	S, T	P, R	DAL,MSI,SOA
M55342^10@6#49&	6,490	250 (char. E, H) or 500 (char. K, M)	E, H, K, M	B, C, W	E	S, T	P, R	DAL,MSI,SOA
M55342^10@6#65&	6,650	250 (char. E, H) or 500 (char. K, M)	E, H, K, M	B, C, W	E	S, T	P, R	DAL,MSI,SOA
M55342^10@6#80&	6,800	250 (char. E, H) or 500 (char. K, M)	E, H, K, M	B, C, W	H, K, N	S, T	P, R	DAL,MSI,SOA
M55342^10@6#81&	6,810	250 (char. E, H) or 500 (char. K, M)	E, H, K, M	B, C, W	E	S, T	P, R	DAL,MSI,SOA
M55342^10@6#98&	6,980	250 (char. E, H) or 500 (char. K, M)	E, H, K, M	B, C, W	E	S, T	P, R	DAL,MSI,SOA
M55342^10@7#15&	7,150	250 (char. E, H) or 500 (char. K, M)	E, H, K, M	B, C, W	E	S, T	P, R	DAL,MSI,SOA
	Resistance	Power	Char.	Term.	Res. Tol./	Level 1	Level 2	
Part Number	Value (Ohms)	Rating (mW)	(^)	Type (@)	Multiplier (#)	FRL (&)	FRL (&)	Manufacturer
M55342^10@7#32&	7,320	250 (char. E, H) or 500 (char. K, M)	E, H, K, M	B, C, W	E	S, T	P, R	DAL,MSI,SOA
M55342^10@7#50&	7,500	250 (char. E, H) or 500 (char. K, M)	E, H, K, M	B, C, W	E, H, K	S, T	P, R	DAL,MSI,SOA
M55342^10@7#68&	7,680	250 (char. E, H) or 500 (char. K, M)	E, H, K, M	B, C, W	E	S, T	P, R	DAL,MSI,SOA
M55342^10@7#87&	7,870	250 (char. E, H) or 500 (char. K, M)	E, H, K, M	B, C, W	E	S, T	P, R	DAL,MSI,SOA
M55342^10@8#06&	8,060	250 (char. E, H) or 500 (char. K, M)	E, H, K, M	B, C, W	E	S, T	P, R	DAL,MSI,SOA
M55342^10@8#20&	8,200	250 (char. E, H) or 500 (char. K, M)	E, H, K, M	B, C, W	H, K, N	S, T	P, R	DAL,MSI,SOA
M55342^10@8#25&	8,250	250 (char. E, H) or 500 (char. K, M)	E, H, K, M	B, C, W	E	S, T	P, R	DAL,MSI,SOA
M55342^10@8#45&	8,450	250 (char. E, H) or 500 (char. K, M)	E, H, K, M	B, C, W	E	S, T	P, R	DAL,MSI,SOA
M55342^10@8#66&	8,660	250 (char. E, H) or 500 (char. K, M)	E, H, K, M	B, C, W	E	S, T	P, R	DAL,MSI,SOA
	Resistance	Power	Char.	Term.	Res. Tol./	Level 1	Level 2	
Part Number	Value (Ohms)	Rating (mW)	(^)	Type (@)	Multiplier (#)	FRL (&)	FRL (&)	Manufacturer
M55342^10@8#87&	8,870	250 (char. E, H) or 500 (char. K, M)	E, H, K, M	B, C, W	E	S, T	P, R	DAL,MSI,SOA
M55342^10@9#09&	9,090	250 (char. E, H) or 500 (char. K, M)	E, H, K, M	B, C, W	E	S, T	P, R	DAL,MSI,SOA
M55342^10@9#10&	9,100	250 (char. E, H) or 500 (char. K, M)	E, H, K, M	B, C, W	H, K	S, T	P, R	DAL,MSI,SOA
M55342^10@9#31&	9,310	250 (char. E, H) or 500 (char. K, M)	E, H, K, M	B, C, W	E	S, T	P, R	DAL,MSI,SOA
M55342^10@9#53&	9,530	250 (char. E, H) or 500 (char. K, M)	E, H, K, M	B, C, W	E	S, T	P, R	DAL,MSI,SOA
M55342^10@9#76&	9,760	250 (char. E, H) or 500 (char. K, M)	E, H, K, M	B, C, W	E	S, T	P, R	DAL,MSI,SOA
	Resistance	Power	Char.	Term.	Res. Tol./	Level 1	Level 2	
Part Number	Value (Ohms)	Rating (mW)	(^)	Type (@)	Multiplier (#)	FRL (&)	FRL (&)	Manufacturer

MIL-PRF-55342/10 (RM1010) Film Chip Resistors: 10,000 Ohms Through 97,600 Ohms

	Resistance	Power	Char.	Term.	Res. Tol./	Level 1	Level 2	

Part Number	Value (Ohms)	Rating (mW)	(^)	Type (@)	Multiplier (#)	FRL (&)	FRL (&)	Manufacturer
M55342^10@10#0&	10,000	250 (char. E, H) or 500 (char. K, M)	E, H, K, M	B, C, W	E, H, K, N	S, T	P, R	DAL,MSI,SOA
M55342^10@10#2&	10,200	250 (char. E, H) or 500 (char. K, M)	E, H, K, M	B, C, W	E	S, T	P, R	DAL,MSI,SOA
M55342^10@10#5&	10,500	250 (char. E, H) or 500 (char. K, M)	E, H, K, M	B, C, W	E	S, T	P, R	DAL,MSI,SOA
M55342^10@10#7&	10,700	250 (char. E, H) or 500 (char. K, M)	E, H, K, M	B, C, W	E	S, T	P, R	DAL,MSI,SOA
M55342^10@11#0&	11,000	250 (char. E, H) or 500 (char. K, M)	E, H, K, M	B, C, W	E, H, K	S, T	P, R	DAL,MSI,SOA
M55342^10@11#3&	11,300	250 (char. E, H) or 500 (char. K, M)	E, H, K, M	B, C, W	E	S, T	P, R	DAL,MSI,SOA
M55342^10@11#5&	11,500	250 (char. E, H) or 500 (char. K, M)	E, H, K, M	B, C, W	E	S, T	P, R	DAL,MSI,SOA
M55342^10@11#8&	11,800	250 (char. E, H) or 500 (char. K, M)	E, H, K, M	B, C, W	E	S, T	P, R	DAL,MSI,SOA
M55342^10@12#0&	12,000	250 (char. E, H) or 500 (char. K, M)	E, H, K, M	B, C, W	H, K, N	S, T	P, R	DAL,MSI,SOA
	Resistance	Power	Char.	Term.	Res. Tol./	Level 1	Level 2	
Part Number	Value (Ohms)	Rating (mW)	(^)	Type (@)	Multiplier (#)	FRL (&)	FRL (&)	Manufacturer
M55342^10@12#1&	12,100	250 (char. E, H) or 500 (char. K, M)	E, H, K, M	B, C, W	E	S, T	P, R	DAL,MSI,SOA
M55342^10@12#4&	12,400	250 (char. E, H) or 500 (char. K, M)	E, H, K, M	B, C, W	E	S, T	P, R	DAL,MSI,SOA
M55342^10@12#7&	12,700	250 (char. E, H) or 500 (char. K, M)	E, H, K, M	B, C, W	E	S, T	P, R	DAL,MSI,SOA
M55342^10@13#0&	13,000	250 (char. E, H) or 500 (char. K, M)	E, H, K, M	B, C, W	E, H, K	S, T	P, R	DAL,MSI,SOA
M55342^10@13#3&	13,300	250 (char. E, H) or 500 (char. K, M)	E, H, K, M	B, C, W	E	S, T	P, R	DAL,MSI,SOA
M55342^10@13#7&	13,700	250 (char. E, H) or 500 (char. K, M)	E, H, K, M	B, C, W	E	S, T	P, R	DAL,MSI,SOA
M55342^10@14#0&	14,000	250 (char. E, H) or 500 (char. K, M)	E, H, K, M	B, C, W	E	S, T	P, R	DAL,MSI,SOA
M55342^10@14#3&	14,300	250 (char. E, H) or 500 (char. K, M)	E, H, K, M	B, C, W	E	S, T	P, R	DAL,MSI,SOA
M55342^10@14#7&	14,700	250 (char. E, H) or 500 (char. K, M)	E, H, K, M	B, C, W	E	S, T	P, R	DAL,MSI,SOA
	Resistance	Power	Char.	Term.	Res. Tol./	Level 1	Level 2	
Part Number	Value (Ohms)	Rating (mW)	(^)	Type (@)	Multiplier (#)	FRL (&)	FRL (&)	Manufacturer
M55342^10@15#0&	15,000	250 (char. E, H) or 500 (char. K, M)	E, H, K, M	B, C, W	E, H, K, N	S, T	P, R	DAL,MSI,SOA
M55342^10@15#4&	15,400	250 (char. E, H) or 500 (char. K, M)	E, H, K, M	B, C, W	E	S, T	P, R	DAL,MSI,SOA
M55342^10@15#8&	15,800	250 (char. E, H) or 500 (char. K, M)	E, H, K, M	B, C, W	E	S, T	P, R	DAL,MSI,SOA
M55342^10@16#0&	16,000	250 (char. E, H) or 500 (char. K, M)	E, H, K, M	B, C, W	H, K	S, T	P, R	DAL,MSI,SOA
M55342^10@16#2&	16,200	250 (char. E, H) or 500 (char. K, M)	E, H, K, M	B, C, W	E	S, T	P, R	DAL,MSI,SOA
M55342^10@16#5&	16,500	250 (char. E, H) or 500 (char. K, M)	E, H, K, M	B, C, W	E	S, T	P, R	DAL,MSI,SOA
M55342^10@16#9&	16,900	250 (char. E, H) or 500 (char. K, M)	E, H, K, M	B, C, W	E	S, T	P, R	DAL,MSI,SOA
M55342^10@17#4&	17,400	250 (char. E, H) or 500 (char. K, M)	E, H, K, M	B, C, W	E	S, T	P, R	DAL,MSI,SOA
M55342^10@17#8&	17,800	250 (char. E, H) or 500 (char. K, M)	E, H, K, M	B, C, W	E	S, T	P, R	DAL,MSI,SOA
	Resistance	Power	Char.	Term.	Res. Tol./	Level 1	Level 2	
Part Number	Value (Ohms)	Rating (mW)	(^)	Type (@)	Multiplier (#)	FRL (&)	FRL (&)	Manufacturer
M55342^10@18#0&	18,000	250 (char. E, H) or 500 (char. K, M)	E, H, K, M	B, C, W	H, K, N	S, T	P, R	DAL,MSI,SOA
M55342^10@18#2&	18,200	250 (char. E, H) or 500 (char. K, M)	E, H, K, M	B, C, W	E	S, T	P, R	DAL,MSI,SOA
M55342^10@18#7&	18,700	250 (char. E, H) or 500 (char. K, M)	E, H, K, M	B, C, W	E	S, T	P, R	DAL,MSI,SOA
M55342^10@19#1&	19,100	250 (char. E, H) or 500 (char. K, M)	E, H, K, M	B, C, W	E	S, T	P, R	DAL,MSI,SOA
M55342^10@19#6&	19,600	250 (char. E, H) or 500 (char. K, M)	E, H, K, M	B, C, W	E	S, T	P, R	DAL,MSI,SOA
M55342^10@20#0&	20,000	250 (char. E, H) or 500 (char. K, M)	E, H, K, M	B, C, W	E, H, K, N	S, T	P, R	DAL,MSI,SOA
M55342^10@20#5&	20,500	250 (char. E, H) or 500 (char. K, M)	E, H, K, M	B, C, W	E	S, T	P, R	DAL,MSI,SOA
M55342^10@21#0&	21,000	250 (char. E, H) or 500 (char. K, M)	E, H, K, M	B, C, W	E	S, T	P, R	DAL,MSI,SOA
M55342^10@21#5&	21,500	250 (char. E, H) or 500 (char. K, M)	E, H, K, M	B, C, W	E	S, T	P, R	DAL,MSI,SOA
	Resistance	Power	Char.	Term.	Res. Tol./	Level 1	Level 2	
Part Number	Value (Ohms)	Rating (mW)	(^)	Type (@)	Multiplier (#)	FRL (&)	FRL (&)	Manufacturer
M55342^10@22#0&	22,000	250 (char. E, H) or 500 (char. K, M)	E, H, K, M	B, C, W	H, K, N	S, T	P, R	DAL,MSI,SOA
M55342^10@22#1&	22,100	250 (char. E, H) or 500 (char. K, M)	E, H, K, M	B, C, W	E	S, T	P, R	DAL,MSI,SOA

M55342^10@22#6&	22,600	250 (char. E, H) or 500 (char. K, M)	E, H, K, M	B, C, W	E	S, T	P, R	DAL,MSI,SOA
M55342^10@23#2&	23,200	250 (char. E, H) or 500 (char. K, M)	E, H, K, M	B, C, W	E	S, T	P, R	DAL,MSI,SOA
M55342^10@23#7&	23,700	250 (char. E, H) or 500 (char. K, M)	E, H, K, M	B, C, W	E	S, T	P, R	DAL,MSI,SOA
M55342^10@24#0&	24,000	250 (char. E, H) or 500 (char. K, M)	E, H, K, M	B, C, W	H, K	S, T	P, R	DAL,MSI,SOA
M55342^10@24#3&	24,300	250 (char. E, H) or 500 (char. K, M)	E, H, K, M	B, C, W	E	S, T	P, R	DAL,MSI,SOA
M55342^10@24#9&	24,900	250 (char. E, H) or 500 (char. K, M)	E, H, K, M	B, C, W	E	S, T	P, R	DAL,MSI,SOA
M55342^10@25#5&	25,500	250 (char. E, H) or 500 (char. K, M)	E, H, K, M	B, C, W	E	S, T	P, R	DAL,MSI,SOA
	Resistance	Power	Char.	Term.	Res. Tol./	Level 1	Level 2	
Part Number	Value (Ohms)	Rating (mW)	(^)	Type (@)	Multiplier (#)	FRL (&)	FRL (&)	Manufacturer
M55342^10@26#1&	26,100	250 (char. E, H) or 500 (char. K, M)	E, H, K, M	B, C, W	E	S, T	P, R	DAL,MSI,SOA
M55342^10@26#7&	26,700	250 (char. E, H) or 500 (char. K, M)	E, H, K, M	B, C, W	E	S, T	P, R	DAL,MSI,SOA
M55342^10@27#0&	27,000	250 (char. E, H) or 500 (char. K, M)	E, H, K, M	B, C, W	H, K, N	S, T	P, R	DAL,MSI,SOA
M55342^10@27#4&	27,400	250 (char. E, H) or 500 (char. K, M)	E, H, K, M	B, C, W	E	S, T	P, R	DAL,MSI,SOA
M55342^10@28#0&	28,000	250 (char. E, H) or 500 (char. K, M)	E, H, K, M	B, C, W	E	S, T	P, R	DAL,MSI,SOA
M55342^10@28#7&	28,700	250 (char. E, H) or 500 (char. K, M)	E, H, K, M	B, C, W	E	S, T	P, R	DAL,MSI,SOA
M55342^10@29#4&	29,400	250 (char. E, H) or 500 (char. K, M)	E, H, K, M	B, C, W	E	S, T	P, R	DAL,MSI,SOA
M55342^10@30#0&	30,000	250 (char. E, H) or 500 (char. K, M)	E, H, K, M	B, C, W	H, K	S, T	P, R	DAL,MSI,SOA
M55342^10@30#1&	30,100	250 (char. E, H) or 500 (char. K, M)	E, H, K, M	B, C, W	E	S, T	P, R	DAL,MSI,SOA
	Resistance	Power	Char.	Term.	Res. Tol./	Level 1	Level 2	
Part Number	Value (Ohms)	Rating (mW)	(^)	Type (@)	Multiplier (#)	FRL (&)	FRL (&)	Manufacturer
M55342^10@30#9&	30,900	250 (char. E, H) or 500 (char. K, M)	E, H, K, M	B, C, W	E	S, T	P, R	DAL,MSI,SOA
M55342^10@31#6&	31,600	250 (char. E, H) or 500 (char. K, M)	E, H, K, M	B, C, W	E	S, T	P, R	DAL,MSI,SOA
M55342^10@32#4&	32,400	250 (char. E, H) or 500 (char. K, M)	E, H, K, M	B, C, W	E	S, T	P, R	DAL,MSI,SOA
M55342^10@33#0&	33,000	250 (char. E, H) or 500 (char. K, M)	E, H, K, M	B, C, W	H, K, N	S, T	P, R	DAL,MSI,SOA
M55342^10@33#2&	33,200	250 (char. E, H) or 500 (char. K, M)	E, H, K, M	B, C, W	E	S, T	P, R	DAL,MSI,SOA
M55342^10@34#0&	34,000	250 (char. E, H) or 500 (char. K, M)	E, H, K, M	B, C, W	E	S, T	P, R	DAL,MSI,SOA
M55342^10@34#8&	34,800	250 (char. E, H) or 500 (char. K, M)	E, H, K, M	B, C, W	E	S, T	P, R	DAL,MSI,SOA
M55342^10@35#7&	35,700	250 (char. E, H) or 500 (char. K, M)	E, H, K, M	B, C, W	E	S, T	P, R	DAL,MSI,SOA
M55342^10@36#0&	36,000	250 (char. E, H) or 500 (char. K, M)	E, H, K, M	B, C, W	H, K	S, T	P, R	DAL,MSI,SOA
	Resistance	Power	Char.	Term.	Res. Tol./	Level 1	Level 2	
Part Number	Value (Ohms)	Rating (mW)	(^)	Type (@)	Multiplier (#)	FRL (&)	FRL (&)	Manufacturer
M55342^10@36#5&	36,500	250 (char. E, H) or 500 (char. K, M)	E, H, K, M	B, C, W	E	S, T	P, R	DAL,MSI,SOA
M55342^10@37#4&	37,400	250 (char. E, H) or 500 (char. K, M)	E, H, K, M	B, C, W	E	S, T	P, R	DAL,MSI,SOA
M55342^10@38#3&	38,300	250 (char. E, H) or 500 (char. K, M)	E, H, K, M	B, C, W	E	S, T	P, R	DAL,MSI,SOA
M55342^10@39#0&	39,000	250 (char. E, H) or 500 (char. K, M)	E, H, K, M	B, C, W	H, K, N	S, T	P, R	DAL,MSI,SOA
M55342^10@39#2&	39,200	250 (char. E, H) or 500 (char. K, M)	E, H, K, M	B, C, W	E	S, T	P, R	DAL,MSI,SOA
M55342^10@40#2&	40,200	250 (char. E, H) or 500 (char. K, M)	E, H, K, M	B, C, W	E	S, T	P, R	DAL,MSI,SOA
M55342^10@41#2&	41,200	250 (char. E, H) or 500 (char. K, M)	E, H, K, M	B, C, W	E	S, T	P, R	DAL,MSI,SOA
M55342^10@42#2&	42,200	250 (char. E, H) or 500 (char. K, M)	E, H, K, M	B, C, W	E	S, T	P, R	DAL,MSI,SOA
M55342^10@43#0&	43,000	250 (char. E, H) or 500 (char. K, M)	E, H, K, M	B, C, W	H, K	S, T	P, R	DAL,MSI,SOA
	Resistance	Power	Char.	Term.	Res. Tol./	Level 1	Level 2	
Part Number	Value (Ohms)	Rating (mW)	(^)	Type (@)	Multiplier (#)	FRL (&)	FRL (&)	Manufacturer
M55342^10@43#2&	43,200	250 (char. E, H) or 500 (char. K, M)	E, H, K, M	B, C, W	E	S, T	P, R	DAL,MSI,SOA
M55342^10@44#2&	44,200	250 (char. E, H) or 500 (char. K, M)	E, H, K, M	B, C, W	E	S, T	P, R	DAL,MSI,SOA
M55342^10@45#3&	45,300	250 (char. E, H) or 500 (char. K, M)	E, H, K, M	B, C, W	E	S, T	P, R	DAL,MSI,SOA
M55342^10@46#4&	46,400	250 (char. E, H) or 500 (char. K, M)	E, H, K, M	B, C, W	E	S, T	P, R	DAL,MSI,SOA
M55342^10@47#0&	47,000	250 (char. E, H) or 500 (char. K, M)	E, H, K, M	B, C, W	H, K, N	S, T	P, R	DAL,MSI,SOA

M55342^10@47#5&	47,500	250 (char. E, H) or 500 (char. K, M)	E, H, K, M	B, C, W	E	S, T	P, R	DAL,MSI,SOA
M55342^10@48#7&	48,700	250 (char. E, H) or 500 (char. K, M)	E, H, K, M	B, C, W	E	S, T	P, R	DAL,MSI,SOA
M55342^10@49#9&	49,900	250 (char. E, H) or 500 (char. K, M)	E, H, K, M	B, C, W	E	S, T	P, R	DAL,MSI,SOA
M55342^10@51#0&	51,000	250 (char. E, H) or 500 (char. K, M)	E, H, K, M	B, C, W	H, K	S, T	P, R	DAL,MSI,SOA
	Resistance	Power	Char.	Term.	Res. Tol./	Level 1	Level 2	
Part Number	Value (Ohms)	Rating (mW)	(^)	Type (@)	Multiplier (#)	FRL (&)	FRL (&)	Manufacturer
M55342^10@51#1&	51,100	250 (char. E, H) or 500 (char. K, M)	E, H, K, M	B, C, W	E	S, T	P, R	DAL,MSI,SOA
M55342^10@52#3&	52,300	250 (char. E, H) or 500 (char. K, M)	E, H, K, M	B, C, W	E	S, T	P, R	DAL,MSI,SOA
M55342^10@53#6&	53,600	250 (char. E, H) or 500 (char. K, M)	E, H, K, M	B, C, W	E	S, T	P, R	DAL,MSI,SOA
M55342^10@54#9&	54,900	250 (char. E, H) or 500 (char. K, M)	E, H, K, M	B, C, W	E	S, T	P, R	DAL,MSI,SOA
M55342^10@56#0&	56,000	250 (char. E, H) or 500 (char. K, M)	E, H, K, M	B, C, W	H, K, N	S, T	P, R	DAL,MSI,SOA
M55342^10@56#2&	56,200	250 (char. E, H) or 500 (char. K, M)	E, H, K, M	B, C, W	E	S, T	P, R	DAL,MSI,SOA
M55342^10@57#6&	57,600	250 (char. E, H) or 500 (char. K, M)	E, H, K, M	B, C, W	E	S, T	P, R	DAL,MSI,SOA
M55342^10@59#0&	59,000	250 (char. E, H) or 500 (char. K, M)	E, H, K, M	B, C, W	E	S, T	P, R	DAL,MSI,SOA
M55342^10@60#4&	60,400	250 (char. E, H) or 500 (char. K, M)	E, H, K, M	B, C, W	E	S, T	P, R	DAL,MSI,SOA
	Resistance	Power	Char.	Term.	Res. Tol./	Level 1	Level 2	
Part Number	Value (Ohms)	Rating (mW)	(^)	Type (@)	Multiplier (#)	FRL (&)	FRL (&)	Manufacturer
M55342^10@61#9&	61,900	250 (char. E, H) or 500 (char. K, M)	E, H, K, M	B, C, W	E	S, T	P, R	DAL,MSI,SOA
M55342^10@62#0&	62,000	250 (char. E, H) or 500 (char. K, M)	E, H, K, M	B, C, W	H, K	S, T	P, R	DAL,MSI,SOA
M55342^10@63#4&	63,400	250 (char. E, H) or 500 (char. K, M)	E, H, K, M	B, C, W	E	S, T	P, R	DAL,MSI,SOA
M55342^10@64#9&	64,900	250 (char. E, H) or 500 (char. K, M)	E, H, K, M	B, C, W	E	S, T	P, R	DAL,MSI,SOA
M55342^10@66#5&	66,500	250 (char. E, H) or 500 (char. K, M)	E, H, K, M	B, C, W	E	S, T	P, R	DAL,MSI,SOA
M55342^10@68#0&	68,000	250 (char. E, H) or 500 (char. K, M)	E, H, K, M	B, C, W	H, K, N	S, T	P, R	DAL,MSI,SOA
M55342^10@68#1&	68,100	250 (char. E, H) or 500 (char. K, M)	E, H, K, M	B, C, W	E	S, T	P, R	DAL,MSI,SOA
M55342^10@69#8&	69,800	250 (char. E, H) or 500 (char. K, M)	E, H, K, M	B, C, W	E	S, T	P, R	DAL,MSI,SOA
M55342^10@71#5&	71,500	250 (char. E, H) or 500 (char. K, M)	E, H, K, M	B, C, W	E	S, T	P, R	DAL,MSI,SOA
	Resistance	Power	Char.	Term.	Res. Tol./	Level 1	Level 2	
Part Number	Value (Ohms)	Rating (mW)	(^)	Type (@)	Multiplier (#)	FRL (&)	FRL (&)	Manufacturer
M55342^10@73#2&	73,200	250 (char. E, H) or 500 (char. K, M)	E, H, K, M	B, C, W	E	S, T	P, R	DAL,MSI,SOA
M55342^10@75#0&	75,000	250 (char. E, H) or 500 (char. K, M)	E, H, K, M	B, C, W	E, H, K	S, T	P, R	DAL,MSI,SOA
M55342^10@76#8&	76,800	250 (char. E, H) or 500 (char. K, M)	E, H, K, M	B, C, W	E	S, T	P, R	DAL,MSI,SOA
M55342^10@78#7&	78,700	250 (char. E, H) or 500 (char. K, M)	E, H, K, M	B, C, W	E	S, T	P, R	DAL,MSI,SOA
M55342^10@80#6&	80,600	250 (char. E, H) or 500 (char. K, M)	E, H, K, M	B, C, W	E	S, T	P, R	DAL,MSI,SOA
M55342^10@82#0&	82,000	250 (char. E, H) or 500 (char. K, M)	E, H, K, M	B, C, W	H, K, N	S, T	P, R	DAL,MSI,SOA
M55342^10@82#5&	82,500	250 (char. E, H) or 500 (char. K, M)	E, H, K, M	B, C, W	E	S, T	P, R	DAL,MSI,SOA
M55342^10@84#5&	84,500	250 (char. E, H) or 500 (char. K, M)	E, H, K, M	B, C, W	E	S, T	P, R	DAL,MSI,SOA
M55342^10@86#6&	86,600	250 (char. E, H) or 500 (char. K, M)	E, H, K, M	B, C, W	E	S, T	P, R	DAL,MSI,SOA
	Resistance	Power	Char.	Term.	Res. Tol./	Level 1	Level 2	
Part Number	Value (Ohms)	Rating (mW)	(^)	Type (@)	Multiplier (#)	FRL (&)	FRL (&)	Manufacturer
M55342^10@88#7&	88,700	250 (char. E, H) or 500 (char. K, M)	E, H, K, M	B, C, W	E	S, T	P, R	DAL,MSI,SOA
M55342^10@90#9&	90,900	250 (char. E, H) or 500 (char. K, M)	E, H, K, M	B, C, W	E	S, T	P, R	DAL,MSI,SOA
M55342^10@91#0&	91,000	250 (char. E, H) or 500 (char. K, M)	E, H, K, M	B, C, W	H, K	S, T	P, R	DAL,MSI,SOA
M55342^10@93#1&	93,100	250 (char. E, H) or 500 (char. K, M)	E, H, K, M	B, C, W	E	S, T	P, R	DAL,MSI,SOA
M55342^10@95#3&	95,300	250 (char. E, H) or 500 (char. K, M)	E, H, K, M	B, C, W	E	S, T	P, R	DAL,MSI,SOA
M55342^10@97#6&	97,600	250 (char. E, H) or 500 (char. K, M)	E, H, K, M	B, C, W	E	S, T	P, R	DAL,MSI,SOA
	Resistance	Power	Char.	Term.	Res. Tol./	Level 1	Level 2	
Part Number	Value (Ohms)	Rating (mW)	(^)	Type (@)	Multiplier (#)	FRL (&)	FRL (&)	Manufacturer

	Resistance	Power	Char.	Term.	Res. Tol./	Level 1	Level 2	
Part Number	Value (Ohms)	Rating (mW)	(^)	Type (@)	Multiplier (#)	FRL (&)	FRL (&)	Manufacturer
M55342^10@100#&	100,000	250 (char. E, H) or 500 (char. K, M)	E, H, K, M	B, C, W	E, H, K, N	S, T	P, R	DAL,MSI,SOA
M55342^10@102#&	102,000	250 (char. E, H) or 500 (char. K, M)	E, H, K, M	B, C, W	E	S, T	P, R	DAL,MSI,SOA
M55342^10@105#&	105,000	250 (char. E, H) or 500 (char. K, M)	E, H, K, M	B, C, W	E	S, T	P, R	DAL,MSI,SOA
M55342^10@107#&	107,000	250 (char. E, H) or 500 (char. K, M)	E, H, K, M	B, C, W	E	S, T	P, R	DAL,MSI,SOA
M55342^10@110#&	110,000	250 (char. E, H) or 500 (char. K, M)	E, H, K, M	B, C, W	E, H, K	S, T	P, R	DAL,MSI,SOA
M55342^10@113#&	113,000	250 (char. E, H) or 500 (char. K, M)	E, H, K, M	B, C, W	E	S, T	P, R	DAL,MSI,SOA
M55342^10@115#&	115,000	250 (char. E, H) or 500 (char. K, M)	E, H, K, M	B, C, W	E	S, T	P, R	DAL,MSI,SOA
M55342^10@118#&	118,000	250 (char. E, H) or 500 (char. K, M)	E, H, K, M	B, C, W	E	S, T	P, R	DAL,MSI,SOA
M55342^10@120#&	120,000	250 (char. E, H) or 500 (char. K, M)	E, H, K, M	B, C, W	H, K, N	S, T	P, R	DAL,MSI,SOA
M55342^10@121#&	121,000	250 (char. E, H) or 500 (char. K, M)	E, H, K, M	B, C, W	E	S, T	P, R	DAL,MSI,SOA
	Resistance	Power	Char.	Term.	Res. Tol./	Level 1	Level 2	
Part Number	Value (Ohms)	Rating (mW)	(^)	Type (@)	Multiplier (#)	FRL (&)	FRL (&)	Manufacturer
M55342^10@124#&	124,000	250 (char. E, H) or 500 (char. K, M)	E, H, K, M	B, C, W	E	S, T	P, R	DAL,MSI,SOA
M55342^10@127#&	127,000	250 (char. E, H) or 500 (char. K, M)	E, H, K, M	B, C, W	E	S, T	P, R	DAL,MSI,SOA
M55342^10@130#&	130,000	250 (char. E, H) or 500 (char. K, M)	E, H, K, M	B, C, W	E, H, K	S, T	P, R	DAL,MSI,SOA
M55342^10@133#&	133,000	250 (char. E, H) or 500 (char. K, M)	E, H, K, M	B, C, W	E	S, T	P, R	DAL,MSI,SOA
M55342^10@137#&	137,000	250 (char. E, H) or 500 (char. K, M)	E, H, K, M	B, C, W	E	S, T	P, R	DAL,MSI,SOA
M55342^10@140#&	140,000	250 (char. E, H) or 500 (char. K, M)	E, H, K, M	B, C, W	E	S, T	P, R	DAL,MSI,SOA
M55342^10@143#&	143,000	250 (char. E, H) or 500 (char. K, M)	E, H, K, M	B, C, W	E	S, T	P, R	DAL,MSI,SOA
M55342^10@147#&	147,000	250 (char. E, H) or 500 (char. K, M)	E, H, K, M	B, C, W	E	S, T	P, R	DAL,MSI,SOA
M55342^10@150#&	150,000	250 (char. E, H) or 500 (char. K, M)	E, H, K, M	B, C, W	E, H, K, N	S, T	P, R	DAL,MSI,SOA
	Resistance	Power	Char.	Term.	Res. Tol./	Level 1	Level 2	
Part Number	Value (Ohms)	Rating (mW)	(^)	Type (@)	Multiplier (#)	FRL (&)	FRL (&)	Manufacturer
M55342^10@154#&	154,000	250 (char. E, H) or 500 (char. K, M)	E, H, K, M	B, C, W	E	S, T	P, R	DAL,MSI,SOA
M55342^10@158#&	158,000	250 (char. E, H) or 500 (char. K, M)	E, H, K, M	B, C, W	E	S, T	P, R	DAL,MSI,SOA
M55342^10@160#&	160,000	250 (char. E, H) or 500 (char. K, M)	E, H, K, M	B, C, W	H, K	S, T	P, R	DAL,MSI,SOA
M55342^10@162#&	162,000	250 (char. E, H) or 500 (char. K, M)	E, H, K, M	B, C, W	E	S, T	P, R	DAL,MSI,SOA
M55342^10@165#&	165,000	250 (char. E, H) or 500 (char. K, M)	E, H, K, M	B, C, W	E	S, T	P, R	DAL,MSI,SOA
M55342^10@169#&	169,000	250 (char. E, H) or 500 (char. K, M)	E, H, K, M	B, C, W	E	S, T	P, R	DAL,MSI,SOA
M55342^10@174#&	174,000	250 (char. E, H) or 500 (char. K, M)	E, H, K, M	B, C, W	E	S, T	P, R	DAL,MSI,SOA
M55342^10@178#&	178,000	250 (char. E, H) or 500 (char. K, M)	E, H, K, M	B, C, W	E	S, T	P, R	DAL,MSI,SOA
M55342^10@180#&	180,000	250 (char. E, H) or 500 (char. K, M)	E, H, K, M	B, C, W	H, K, N	S, T	P, R	DAL,MSI,SOA
	Resistance	Power	Char.	Term.	Res. Tol./	Level 1	Level 2	
Part Number	Value (Ohms)	Rating (mW)	(^)	Type (@)	Multiplier (#)	FRL (&)	FRL (&)	Manufacturer
M55342^10@182#&	182,000	250 (char. E, H) or 500 (char. K, M)	E, H, K, M	B, C, W	E	S, T	P, R	DAL,MSI,SOA
M55342^10@187#&	187,000	250 (char. E, H) or 500 (char. K, M)	E, H, K, M	B, C, W	E	S, T	P, R	DAL,MSI,SOA
M55342^10@191#&	191,000	250 (char. E, H) or 500 (char. K, M)	E, H, K, M	B, C, W	E	S, T	P, R	DAL,MSI,SOA
M55342^10@196#&	196,000	250 (char. E, H) or 500 (char. K, M)	E, H, K, M	B, C, W	E	S, T	P, R	DAL,MSI,SOA
M55342^10@200#&	200,000	250 (char. E, H) or 500 (char. K, M)	E, H, K, M	B, C, W	E, H, K, N	S, T	P, R	DAL,MSI,SOA
M55342^10@205#&	205,000	250 (char. E, H) or 500 (char. K, M)	E, H, K, M	B, C, W	E	S, T	P, R	DAL,MSI,SOA

M55342^10@210#&	210,000	250 (char. E, H) or 500 (char. K, M)	E, H, K, M	B, C, W	E	S, T	P, R	DAL,MSI,SOA
M55342^10@215#&	215,000	250 (char. E, H) or 500 (char. K, M)	E, H, K, M	B, C, W	E	S, T	P, R	DAL,MSI,SOA
M55342^10@220#&	220,000	250 (char. E, H) or 500 (char. K, M)	E, H, K, M	B, C, W	H, K, N	S, T	P, R	DAL,MSI,SOA
	Resistance	Power	Char.	Term.	Res. Tol./	Level 1	Level 2	
Part Number	Value (Ohms)	Rating (mW)	(^)	Type (@)	Multiplier (#)	FRL (&)	FRL (&)	Manufacturer
M55342^10@221#&	221,000	250 (char. E, H) or 500 (char. K, M)	E, H, K, M	B, C, W	E	S, T	P, R	DAL,MSI,SOA
M55342^10@226#&	226,000	250 (char. E, H) or 500 (char. K, M)	E, H, K, M	B, C, W	E	S, T	P, R	DAL,MSI,SOA
M55342^10@232#&	232,000	250 (char. E, H) or 500 (char. K, M)	E, H, K, M	B, C, W	E	S, T	P, R	DAL,MSI,SOA
M55342^10@237#&	237,000	250 (char. E, H) or 500 (char. K, M)	E, H, K, M	B, C, W	E	S, T	P, R	DAL,MSI,SOA
M55342^10@240#&	240,000	250 (char. E, H) or 500 (char. K, M)	E, H, K, M	B, C, W	H, K	S, T	P, R	DAL,MSI,SOA
M55342^10@243#&	243,000	250 (char. E, H) or 500 (char. K, M)	E, H, K, M	B, C, W	E	S, T	P, R	DAL,MSI,SOA
M55342^10@249#&	249,000	250 (char. E, H) or 500 (char. K, M)	E, H, K, M	B, C, W	E	S, T	P, R	DAL,MSI,SOA
M55342^10@255#&	255,000	250 (char. E, H) or 500 (char. K, M)	E, H, K, M	B, C, W	E	S, T	P, R	DAL,MSI,SOA
M55342^10@261#&	261,000	250 (char. E, H) or 500 (char. K, M)	E, H, K, M	B, C, W	E	S, T	P, R	DAL,MSI,SOA
	Resistance	Power	Char.	Term.	Res. Tol./	Level 1	Level 2	
Part Number	Value (Ohms)	Rating (mW)	(^)	Type (@)	Multiplier (#)	FRL (&)	FRL (&)	Manufacturer
M55342^10@267#&	267,000	250 (char. E, H) or 500 (char. K, M)	E, H, K, M	B, C, W	E	S, T	P, R	DAL,MSI,SOA
M55342^10@270#&	270,000	250 (char. E, H) or 500 (char. K, M)	E, H, K, M	B, C, W	H, K, N	S, T	P, R	DAL,MSI,SOA
M55342^10@274#&	274,000	250 (char. E, H) or 500 (char. K, M)	E, H, K, M	B, C, W	E	S, T	P, R	DAL,MSI,SOA
M55342^10@280#&	280,000	250 (char. E, H) or 500 (char. K, M)	E, H, K, M	B, C, W	E	S, T	P, R	DAL,MSI,SOA
M55342^10@287#&	287,000	250 (char. E, H) or 500 (char. K, M)	E, H, K, M	B, C, W	E	S, T	P, R	DAL,MSI,SOA
M55342^10@294#&	294,000	250 (char. E, H) or 500 (char. K, M)	E, H, K, M	B, C, W	E	S, T	P, R	DAL,MSI,SOA
M55342^10@300#&	300,000	250 (char. E, H) or 500 (char. K, M)	E, H, K, M	B, C, W	H, K	S, T	P, R	DAL,MSI,SOA
M55342^10@301#&	301,000	250 (char. E, H) or 500 (char. K, M)	E, H, K, M	B, C, W	E	S, T	P, R	DAL,MSI,SOA
M55342^10@309#&	309,000	250 (char. E, H) or 500 (char. K, M)	E, H, K, M	B, C, W	E	S, T	P, R	DAL,MSI,SOA
	Resistance	Power	Char.	Term.	Res. Tol./	Level 1	Level 2	
Part Number	Value (Ohms)	Rating (mW)	(^)	Type (@)	Multiplier (#)	FRL (&)	FRL (&)	Manufacturer
M55342^10@316#&	316,000	250 (char. E, H) or 500 (char. K, M)	E, H, K, M	B, C, W	E	S, T	P, R	DAL,MSI,SOA
M55342^10@324#&	324,000	250 (char. E, H) or 500 (char. K, M)	E, H, K, M	B, C, W	E	S, T	P, R	DAL,MSI,SOA
M55342^10@330#&	330,000	250 (char. E, H) or 500 (char. K, M)	E, H, K, M	B, C, W	H, K, N	S, T	P, R	DAL,MSI,SOA
M55342^10@332#&	332,000	250 (char. E, H) or 500 (char. K, M)	E, H, K, M	B, C, W	E	S, T	P, R	DAL,MSI,SOA
M55342^10@340#&	340,000	250 (char. E, H) or 500 (char. K, M)	E, H, K, M	B, C, W	E	S, T	P, R	DAL,MSI,SOA
M55342^10@348#&	348,000	250 (char. E, H) or 500 (char. K, M)	E, H, K, M	B, C, W	E	S, T	P, R	DAL,MSI,SOA
M55342^10@357#&	357,000	250 (char. E, H) or 500 (char. K, M)	E, H, K, M	B, C, W	E	S, T	P, R	DAL,MSI,SOA
M55342^10@360#&	360,000	250 (char. E, H) or 500 (char. K, M)	E, H, K, M	B, C, W	H, K	S, T	P, R	DAL,MSI,SOA
M55342^10@365#&	365,000	250 (char. E, H) or 500 (char. K, M)	E, H, K, M	B, C, W	E	S, T	P, R	DAL,MSI,SOA
	Resistance	Power	Char.	Term.	Res. Tol./	Level 1	Level 2	
Part Number	Value (Ohms)	Rating (mW)	(^)	Type (@)	Multiplier (#)	FRL (&)	FRL (&)	Manufacturer
M55342^10@374#&	374,000	250 (char. E, H) or 500 (char. K, M)	E, H, K, M	B, C, W	E	S, T	P, R	DAL,MSI,SOA
M55342^10@383#&	383,000	250 (char. E, H) or 500 (char. K, M)	E, H, K, M	B, C, W	E	S, T	P, R	DAL,MSI,SOA
M55342^10@390#&	390,000	250 (char. E, H) or 500 (char. K, M)	E, H, K, M	B, C, W	H, K, N	S, T	P, R	DAL,MSI,SOA
M55342^10@392#&	392,000	250 (char. E, H) or 500 (char. K, M)	E, H, K, M	B, C, W	E	S, T	P, R	DAL,MSI,SOA
M55342^10@402#&	402,000	250 (char. E, H) or 500 (char. K, M)	E, H, K, M	B, C, W	E	S, T	P, R	DAL,MSI,SOA
M55342^10@412#&	412,000	250 (char. E, H) or 500 (char. K, M)	E, H, K, M	B, C, W	E	S, T	P, R	DAL,MSI,SOA
M55342^10@422#&	422,000	250 (char. E, H) or 500 (char. K, M)	E, H, K, M	B, C, W	E	S, T	P, R	DAL,MSI,SOA
M55342^10@430#&	430,000	250 (char. E, H) or 500 (char. K, M)	E, H, K, M	B, C, W	H, K	S, T	P, R	DAL,MSI,SOA
M55342^10@432#&	432,000	250 (char. E, H) or 500 (char. K, M)	E, H, K, M	B, C, W	E	S, T	P, R	DAL,MSI,SOA

	Resistance	Power	Char.	Term.	Res. Tol./	Level 1	Level 2	
Part Number	Value (Ohms)	Rating (mW)	(^)	Type (@)	Multiplier (#)	FRL (&)	FRL (&)	Manufacturer
M55342^10@442#&	442,000	250 (char. E, H) or 500 (char. K, M)	E, H, K, M	B, C, W	E	S, T	P, R	DAL,MSI,SOA
M55342^10@453#&	453,000	250 (char. E, H) or 500 (char. K, M)	E, H, K, M	B, C, W	E	S, T	P, R	DAL,MSI,SOA
M55342^10@464#&	464,000	250 (char. E, H) or 500 (char. K, M)	E, H, K, M	B, C, W	E	S, T	P, R	DAL,MSI,SOA
M55342^10@470#&	470,000	250 (char. E, H) or 500 (char. K, M)	E, H, K, M	B, C, W	H, K, N	S, T	P, R	DAL,MSI,SOA
M55342^10@475#&	475,000	250 (char. E, H) or 500 (char. K, M)	E, H, K, M	B, C, W	E	S, T	P, R	DAL,MSI,SOA
M55342^10@487#&	487,000	250 (char. E, H) or 500 (char. K, M)	E, H, K, M	B, C, W	E	S, T	P, R	DAL,MSI,SOA
M55342^10@499#&	499,000	250 (char. E, H) or 500 (char. K, M)	E, H, K, M	B, C, W	E	S, T	P, R	DAL,MSI,SOA
M55342^10@510#&	510,000	250 (char. E, H) or 500 (char. K, M)	E, H, K, M	B, C, W	H, K	S, T	P, R	DAL,MSI,SOA
M55342^10@511#&	511,000	250 (char. E, H) or 500 (char. K, M)	E, H, K, M	B, C, W	E	S, T	P, R	DAL,MSI,SOA
	Resistance	Power	Char.	Term.	Res. Tol./	Level 1	Level 2	
Part Number	Value (Ohms)	Rating (mW)	(^)	Type (@)	Multiplier (#)	FRL (&)	FRL (&)	Manufacturer
M55342^10@523#&	523,000	250 (char. E, H) or 500 (char. K, M)	E, H, K, M	B, C, W	E	S, T	P, R	DAL,MSI,SOA
M55342^10@536#&	536,000	250 (char. E, H) or 500 (char. K, M)	E, H, K, M	B, C, W	E	S, T	P, R	DAL,MSI,SOA
M55342^10@549#&	549,000	250 (char. E, H) or 500 (char. K, M)	E, H, K, M	B, C, W	E	S, T	P, R	DAL,MSI,SOA
M55342^10@560#&	560,000	250 (char. E, H) or 500 (char. K, M)	E, H, K, M	B, C, W	H, K, N	S, T	P, R	DAL,MSI,SOA
M55342^10@562#&	562,000	250 (char. E, H) or 500 (char. K, M)	E, H, K, M	B, C, W	E	S, T	P, R	DAL,MSI,SOA
M55342^10@576#&	576,000	250 (char. E, H) or 500 (char. K, M)	E, H, K, M	B, C, W	E	S, T	P, R	DAL,MSI,SOA
M55342^10@590#&	590,000	250 (char. E, H) or 500 (char. K, M)	E, H, K, M	B, C, W	E	S, T	P, R	DAL,MSI,SOA
M55342^10@604#&	604,000	250 (char. E, H) or 500 (char. K, M)	E, H, K, M	B, C, W	E	S, T	P, R	DAL,MSI,SOA
M55342^10@619#&	619,000	250 (char. E, H) or 500 (char. K, M)	E, H, K, M	B, C, W	E	S, T	P, R	DAL,MSI,SOA
	Resistance	Power	Char.	Term.	Res. Tol./	Level 1	Level 2	
Part Number	Value (Ohms)	Rating (mW)	(^)	Type (@)	Multiplier (#)	FRL (&)	FRL (&)	Manufacturer
M55342^10@620#&	620,000	250 (char. E, H) or 500 (char. K, M)	E, H, K, M	B, C, W	H, K	S, T	P, R	DAL,MSI,SOA
M55342^10@634#&	634,000	250 (char. E, H) or 500 (char. K, M)	E, H, K, M	B, C, W	E	S, T	P, R	DAL,MSI,SOA
M55342^10@649#&	649,000	250 (char. E, H) or 500 (char. K, M)	E, H, K, M	B, C, W	E	S, T	P, R	DAL,MSI,SOA
M55342^10@665#&	665,000	250 (char. E, H) or 500 (char. K, M)	E, H, K, M	B, C, W	E	S, T	P, R	DAL,MSI,SOA
M55342^10@680#&	680,000	250 (char. E, H) or 500 (char. K, M)	E, H, K, M	B, C, W	H, K, N	S, T	P, R	DAL,MSI,SOA
M55342^10@681#&	681,000	250 (char. E, H) or 500 (char. K, M)	E, H, K, M	B, C, W	E	S, T	P, R	DAL,MSI,SOA
M55342^10@698#&	698,000	250 (char. E, H) or 500 (char. K, M)	E, H, K, M	B, C, W	E	S, T	P, R	DAL,MSI,SOA
M55342^10@715#&	715,000	250 (char. E, H) or 500 (char. K, M)	E, H, K, M	B, C, W	E	S, T	P, R	DAL,MSI,SOA
M55342^10@732#&	732,000	250 (char. E, H) or 500 (char. K, M)	E, H, K, M	B, C, W	E	S, T	P, R	DAL,MSI,SOA
	Resistance	Power	Char.	Term.	Res. Tol./	Level 1	Level 2	
Part Number	Value (Ohms)	Rating (mW)	(^)	Type (@)	Multiplier (#)	FRL (&)	FRL (&)	Manufacturer
M55342^10@750#&	750,000	250 (char. E, H) or 500 (char. K, M)	E, H, K, M	B, C, W	E, H, K	S, T	P, R	DAL,MSI,SOA
M55342^10@768#&	768,000	250 (char. E, H) or 500 (char. K, M)	E, H, K, M	B, C, W	E	S, T	P, R	DAL,MSI,SOA
M55342^10@787#&	787,000	250 (char. E, H) or 500 (char. K, M)	E, H, K, M	B, C, W	E	S, T	P, R	DAL,MSI,SOA
M55342^10@806#&	806,000	250 (char. E, H) or 500 (char. K, M)	E, H, K, M	B, C, W	E	S, T	P, R	DAL,MSI,SOA
M55342^10@820#&	820,000	250 (char. E, H) or 500 (char. K, M)	E, H, K, M	B, C, W	H, K, N	S, T	P, R	DAL,MSI,SOA
M55342^10@825#&	825,000	250 (char. E, H) or 500 (char. K, M)	E, H, K, M	B, C, W	E	S, T	P, R	DAL,MSI,SOA
M55342^10@845#&	845,000	250 (char. E, H) or 500 (char. K, M)	E, H, K, M	B, C, W	E	S, T	P, R	DAL,MSI,SOA
M55342^10@866#&	866,000	250 (char. E, H) or 500 (char. K, M)	E, H, K, M	B, C, W	E	S, T	P, R	DAL,MSI,SOA
M55342^10@887#&	887,000	250 (char. E, H) or 500 (char. K, M)	E, H, K, M	B, C, W	E	S, T	P, R	DAL,MSI,SOA
	Resistance	Power	Char.	Term.	Res. Tol./	Level 1	Level 2	
Part Number	Value (Ohms)	Rating (mW)	(^)	Type (@)	Multiplier (#)	FRL (&)	FRL (&)	Manufacturer
M55342^10@909#&	909,000	250 (char. E, H) or 500 (char. K, M)	E, H, K, M	B, C, W	E	S, T	P, R	DAL,MSI,SOA

M55342^10@910#&	910,000	250 (char. E, H) or 500 (char. K, M)	E, H, K, M	B, C, W	H, K	S, T	P, R	DAL,MSI,SOA
M55342^10@931#&	931,000	250 (char. E, H) or 500 (char. K, M)	E, H, K, M	B, C, W	E	S, T	P, R	DAL,MSI,SOA
M55342^10@953#&	953,000	250 (char. E, H) or 500 (char. K, M)	E, H, K, M	B, C, W	E	S, T	P, R	DAL,MSI,SOA
M55342^10@976#&	976,000	250 (char. E, H) or 500 (char. K, M)	E, H, K, M	B, C, W	E	S, T	P, R	DAL,MSI,SOA
	Resistance	Power	Char.	Term.	Res. Tol./	Level 1	Level 2	
Part Number	Value (Ohms)	Rating (mW)	(^)	Type (@)	Multiplier (#)	FRL (&)	FRL (&)	Manufacturer

MIL-PRF-55342/10 (RM1010) Film Chip Resistors: 1,000,000 Ohms Through 5,620,000 Ohms

	Resistance	Power	Char.	Term.	Res. Tol./	Level 1	Level 2	
Part Number	Value (Ohms)	Rating (mW)	(^)	Type (@)	Multiplier (#)	FRL (&)	FRL (&)	Manufacturer
M55342^10@1#00&	1,000,000	250 (char. E, H) or 500 (char. K, M)	E, H, K, M	B, C, W	F, T, L, P	S, T	P, R	DAL,MSI,SOA
M55342^10@1#02&	1,020,000	250 (char. E, H) or 500 (char. K, M)	E, H, K, M	B, C, W	F	S, T	P, R	DAL,MSI,SOA
M55342^10@1#05&	1,050,000	250 (char. E, H) or 500 (char. K, M)	E, H, K, M	B, C, W	F	S, T	P, R	DAL,MSI,SOA
M55342^10@1#07&	1,070,000	250 (char. E, H) or 500 (char. K, M)	E, H, K, M	B, C, W	F	S, T	P, R	DAL,MSI,SOA
M55342^10@1#10&	1,100,000	250 (char. E, H) or 500 (char. K, M)	E, H, K, M	B, C, W	F, T, L	S, T	P, R	DAL,MSI,SOA
M55342^10@1#13&	1,130,000	250 (char. E, H) or 500 (char. K, M)	E, H, K, M	B, C, W	F	S, T	P, R	DAL,MSI,SOA
M55342^10@1#15&	1,150,000	250 (char. E, H) or 500 (char. K, M)	E, H, K, M	B, C, W	F	S, T	P, R	DAL,MSI,SOA
M55342^10@1#18&	1,180,000	250 (char. E, H) or 500 (char. K, M)	E, H, K, M	B, C, W	F	S, T	P, R	DAL,MSI,SOA
M55342^10@1#20&	1,200,000	250 (char. E, H) or 500 (char. K, M)	E, H, K, M	B, C, W	T, L, P	S, T	P, R	DAL,MSI,SOA
M55342^10@1#21&	1,210,000	250 (char. E, H) or 500 (char. K, M)	E, H, K, M	B, C, W	F	S, T	P, R	DAL,MSI,SOA
	Resistance	Power	Char.	Term.	Res. Tol./	Level 1	Level 2	
Part Number	Value (Ohms)	Rating (mW)	(^)	Type (@)	Multiplier (#)	FRL (&)	FRL (&)	Manufacturer
M55342^10@1#24&	1,240,000	250 (char. E, H) or 500 (char. K, M)	E, H, K, M	B, C, W	F	S, T	P, R	DAL,MSI,SOA
M55342^10@1#27&	1,270,000	250 (char. E, H) or 500 (char. K, M)	E, H, K, M	B, C, W	F	S, T	P, R	DAL,MSI,SOA
M55342^10@1#30&	1,300,000	250 (char. E, H) or 500 (char. K, M)	E, H, K, M	B, C, W	F, T, L	S, T	P, R	DAL,MSI,SOA
M55342^10@1#33&	1,330,000	250 (char. E, H) or 500 (char. K, M)	E, H, K, M	B, C, W	F	S, T	P, R	DAL,MSI,SOA
M55342^10@1#37&	1,370,000	250 (char. E, H) or 500 (char. K, M)	E, H, K, M	B, C, W	F	S, T	P, R	DAL,MSI,SOA
M55342^10@1#40&	1,400,000	250 (char. E, H) or 500 (char. K, M)	E, H, K, M	B, C, W	F	S, T	P, R	DAL,MSI,SOA
M55342^10@1#43&	1,430,000	250 (char. E, H) or 500 (char. K, M)	E, H, K, M	B, C, W	F	S, T	P, R	DAL,MSI,SOA
M55342^10@1#47&	1,470,000	250 (char. E, H) or 500 (char. K, M)	E, H, K, M	B, C, W	F	S, T	P, R	DAL,MSI,SOA
M55342^10@1#50&	1,500,000	250 (char. E, H) or 500 (char. K, M)	E, H, K, M	B, C, W	F, T, L, P	S, T	P, R	DAL,MSI,SOA
	Resistance	Power	Char.	Term.	Res. Tol./	Level 1	Level 2	
Part Number	Value (Ohms)	Rating (mW)	(^)	Type (@)	Multiplier (#)	FRL (&)	FRL (&)	Manufacturer
M55342^10@1#54&	1,540,000	250 (char. E, H) or 500 (char. K, M)	E, H, K, M	B, C, W	F	S, T	P, R	DAL,MSI,SOA
M55342^10@1#58&	1,580,000	250 (char. E, H) or 500 (char. K, M)	E, H, K, M	B, C, W	F	S, T	P, R	DAL,MSI,SOA
M55342^10@1#60&	1,600,000	250 (char. E, H) or 500 (char. K, M)	E, H, K, M	B, C, W	T, L	S, T	P, R	DAL,MSI,SOA
M55342^10@1#62&	1,620,000	250 (char. E, H) or 500 (char. K, M)	E, H, K, M	B, C, W	F	S, T	P, R	DAL,MSI,SOA
M55342^10@1#65&	1,650,000	250 (char. E, H) or 500 (char. K, M)	E, H, K, M	B, C, W	F	S, T	P, R	DAL,MSI,SOA
M55342^10@1#69&	1,690,000	250 (char. E, H) or 500 (char. K, M)	E, H, K, M	B, C, W	F	S, T	P, R	DAL,MSI,SOA
M55342^10@1#74&	1,740,000	250 (char. E, H) or 500 (char. K, M)	E, H, K, M	B, C, W	F	S, T	P, R	DAL,MSI,SOA
M55342^10@1#78&	1,780,000	250 (char. E, H) or 500 (char. K, M)	E, H, K, M	B, C, W	F	S, T	P, R	DAL,MSI,SOA
M55342^10@1#80&	1,800,000	250 (char. E, H) or 500 (char. K, M)	E, H, K, M	B, C, W	T, L, P	S, T	P, R	DAL,MSI,SOA
	Resistance	Power	Char.	Term.	Res. Tol./	Level 1	Level 2	
Part Number	Value (Ohms)	Rating (mW)	(^)	Type (@)	Multiplier (#)	FRL (&)	FRL (&)	Manufacturer

M55342^10@1#82&	1,820,000	250 (char. E, H) or 500 (char. K, M)	E, H, K, M	B, C, W	F	S, T	P, R	DAL,MSI,SOA
M55342^10@1#87&	1,870,000	250 (char. E, H) or 500 (char. K, M)	E, H, K, M	B, C, W	F	S, T	P, R	DAL,MSI,SOA
M55342^10@1#91&	1,910,000	250 (char. E, H) or 500 (char. K, M)	E, H, K, M	B, C, W	F	S, T	P, R	DAL,MSI,SOA
M55342^10@1#96&	1,960,000	250 (char. E, H) or 500 (char. K, M)	E, H, K, M	B, C, W	F	S, T	P, R	DAL,MSI,SOA
M55342^10@2#00&	2,000,000	250 (char. E, H) or 500 (char. K, M)	E, H, K, M	B, C, W	F, T, L, P	S, T	P, R	DAL,MSI,SOA
M55342^10@2#05&	2,050,000	250 (char. E, H) or 500 (char. K, M)	E, H, K, M	B, C, W	F	S, T	P, R	DAL,MSI,SOA
M55342^10@2#10&	2,100,000	250 (char. E, H) or 500 (char. K, M)	E, H, K, M	B, C, W	F	S, T	P, R	DAL,MSI,SOA
M55342^10@2#15&	2,150,000	250 (char. E, H) or 500 (char. K, M)	E, H, K, M	B, C, W	F	S, T	P, R	DAL,MSI,SOA
M55342^10@2#20&	2,200,000	250 (char. E, H) or 500 (char. K, M)	E, H, K, M	B, C, W	T, L, P	S, T	P, R	DAL,MSI,SOA
	Resistance	Power	Char.	Term.	Res. Tol./	Level 1	Level 2	
Part Number	Value (Ohms)	Rating (mW)	(^)	Type (@)	Multiplier (#)	FRL (&)	FRL (&)	Manufacturer
M55342^10@2#21&	2,210,000	250 (char. E, H) or 500 (char. K, M)	E, H, K, M	B, C, W	F	S, T	P, R	DAL,MSI,SOA
M55342^10@2#26&	2,260,000	250 (char. E, H) or 500 (char. K, M)	E, H, K, M	B, C, W	F	S, T	P, R	DAL,MSI,SOA
M55342^10@2#32&	2,320,000	250 (char. E, H) or 500 (char. K, M)	E, H, K, M	B, C, W	F	S, T	P, R	DAL,MSI,SOA
M55342^10@2#37&	2,370,000	250 (char. E, H) or 500 (char. K, M)	E, H, K, M	B, C, W	F	S, T	P, R	DAL,MSI,SOA
M55342^10@2#40&	2,400,000	250 (char. E, H) or 500 (char. K, M)	E, H, K, M	B, C, W	T, L	S, T	P, R	DAL,MSI,SOA
M55342^10@2#43&	2,430,000	250 (char. E, H) or 500 (char. K, M)	E, H, K, M	B, C, W	F	S, T	P, R	DAL,MSI,SOA
M55342^10@2#49&	2,490,000	250 (char. E, H) or 500 (char. K, M)	E, H, K, M	B, C, W	F	S, T	P, R	DAL,MSI,SOA
M55342^10@2#55&	2,550,000	250 (char. E, H) or 500 (char. K, M)	E, H, K, M	B, C, W	F	S, T	P, R	DAL,MSI,SOA
M55342^10@2#61&	2,610,000	250 (char. E, H) or 500 (char. K, M)	E, H, K, M	B, C, W	F	S, T	P, R	DAL,MSI,SOA
	Resistance	Power	Char.	Term.	Res. Tol./	Level 1	Level 2	
Part Number	Value (Ohms)	Rating (mW)	(^)	Type (@)	Multiplier (#)	FRL (&)	FRL (&)	Manufacturer
M55342^10@2#67&	2,670,000	250 (char. E, H) or 500 (char. K, M)	E, H, K, M	B, C, W	F	S, T	P, R	DAL,MSI,SOA
M55342^10@2#70&	2,700,000	250 (char. E, H) or 500 (char. K, M)	E, H, K, M	B, C, W	T, L, P	S, T	P, R	DAL,MSI,SOA
M55342^10@2#74&	2,740,000	250 (char. E, H) or 500 (char. K, M)	E, H, K, M	B, C, W	F	S, T	P, R	DAL,MSI,SOA
M55342^10@2#80&	2,800,000	250 (char. E, H) or 500 (char. K, M)	E, H, K, M	B, C, W	F	S, T	P, R	DAL,MSI,SOA
M55342^10@2#87&	2,870,000	250 (char. E, H) or 500 (char. K, M)	E, H, K, M	B, C, W	F	S, T	P, R	DAL,MSI,SOA
M55342^10@2#94&	2,940,000	250 (char. E, H) or 500 (char. K, M)	E, H, K, M	B, C, W	F	S, T	P, R	DAL,MSI,SOA
M55342^10@3#00&	3,000,000	250 (char. E, H) or 500 (char. K, M)	E, H, K, M	B, C, W	T, L	S, T	P, R	DAL,MSI,SOA
M55342^10@3#01&	3,010,000	250 (char. E, H) or 500 (char. K, M)	E, H, K, M	B, C, W	F	S, T	P, R	DAL,MSI,SOA
M55342^10@3#09&	3,090,000	250 (char. E, H) or 500 (char. K, M)	E, H, K, M	B, C, W	F	S, T	P, R	DAL,MSI,SOA
	Resistance	Power	Char.	Term.	Res. Tol./	Level 1	Level 2	
Part Number	Value (Ohms)	Rating (mW)	(^)	Type (@)	Multiplier (#)	FRL (&)	FRL (&)	Manufacturer
M55342^10@3#16&	3,160,000	250 (char. E, H) or 500 (char. K, M)	E, H, K, M	B, C, W	F	S, T	P, R	DAL,MSI,SOA
M55342^10@3#24&	3,240,000	250 (char. E, H) or 500 (char. K, M)	E, H, K, M	B, C, W	F	S, T	P, R	DAL,MSI,SOA
M55342^10@3#30&	3,300,000	250 (char. E, H) or 500 (char. K, M)	E, H, K, M	B, C, W	T, L, P	S, T	P, R	DAL,MSI,SOA
M55342^10@3#32&	3,320,000	250 (char. E, H) or 500 (char. K, M)	E, H, K, M	B, C, W	F	S, T	P, R	DAL,MSI,SOA
M55342^10@3#40&	3,400,000	250 (char. E, H) or 500 (char. K, M)	E, H, K, M	B, C, W	F	S, T	P, R	DAL,MSI,SOA
M55342^10@3#48&	3,480,000	250 (char. E, H) or 500 (char. K, M)	E, H, K, M	B, C, W	F	S, T	P, R	DAL,MSI,SOA
M55342^10@3#57&	3,570,000	250 (char. E, H) or 500 (char. K, M)	E, H, K, M	B, C, W	F	S, T	P, R	DAL,MSI,SOA
M55342^10@3#60&	3,600,000	250 (char. E, H) or 500 (char. K, M)	E, H, K, M	B, C, W	T, L	S, T	P, R	DAL,MSI,SOA
M55342^10@3#65&	3,650,000	250 (char. E, H) or 500 (char. K, M)	E, H, K, M	B, C, W	F	S, T	P, R	DAL,MSI,SOA
	Resistance	Power	Char.	Term.	Res. Tol./	Level 1	Level 2	
Part Number	Value (Ohms)	Rating (mW)	(^)	Type (@)	Multiplier (#)	FRL (&)	FRL (&)	Manufacturer
M55342^10@3#74&	3,740,000	250 (char. E, H) or 500 (char. K, M)	E, H, K, M	B, C, W	F	S, T	P, R	DAL,MSI,SOA
M55342^10@3#83&	3,830,000	250 (char. E, H) or 500 (char. K, M)	E, H, K, M	B, C, W	F	S, T	P, R	DAL,MSI,SOA
M55342^10@3#90&	3,900,000	250 (char. E, H) or 500 (char. K, M)	E, H, K, M	B, C, W	T, L, P	S, T	P, R	DAL,MSI,SOA

M55342^10@3#92&	3,920,000	250 (char. E, H) or 500 (char. K, M)	E, H, K, M	B, C, W	F	S, T	P, R	DAL,MSI,SOA
M55342^10@4#02&	4,020,000	250 (char. E, H) or 500 (char. K, M)	E, H, K, M	B, C, W	F	S, T	P, R	DAL,MSI,SOA
M55342^10@4#12&	4,120,000	250 (char. E, H) or 500 (char. K, M)	E, H, K, M	B, C, W	F	S, T	P, R	DAL,MSI,SOA
M55342^10@4#22&	4,220,000	250 (char. E, H) or 500 (char. K, M)	E, H, K, M	B, C, W	F	S, T	P, R	DAL,MSI,SOA
M55342^10@4#30&	4,300,000	250 (char. E, H) or 500 (char. K, M)	E, H, K, M	B, C, W	T, L	S, T	P, R	DAL,MSI,SOA
M55342^10@4#32&	4,320,000	250 (char. E, H) or 500 (char. K, M)	E, H, K, M	B, C, W	F	S, T	P, R	DAL,MSI,SOA
	Resistance	Power	Char.	Term.	Res. Tol./	Level 1	Level 2	
Part Number	Value (Ohms)	Rating (mW)	(^)	Type (@)	Multiplier (#)	FRL (&)	FRL (&)	Manufacturer
M55342^10@4#42&	4,420,000	250 (char. E, H) or 500 (char. K, M)	E, H, K, M	B, C, W	F	S, T	P, R	DAL,MSI,SOA
M55342^10@4#53&	4,530,000	250 (char. E, H) or 500 (char. K, M)	E, H, K, M	B, C, W	F	S, T	P, R	DAL,MSI,SOA
M55342^10@4#64&	4,640,000	250 (char. E, H) or 500 (char. K, M)	E, H, K, M	B, C, W	F	S, T	P, R	DAL,MSI,SOA
M55342^10@4#70&	4,700,000	250 (char. E, H) or 500 (char. K, M)	E, H, K, M	B, C, W	T, L, P	S, T	P, R	DAL,MSI,SOA
M55342^10@4#75&	4,750,000	250 (char. E, H) or 500 (char. K, M)	E, H, K, M	B, C, W	F	S, T	P, R	DAL,MSI,SOA
M55342^10@4#87&	4,870,000	250 (char. E, H) or 500 (char. K, M)	E, H, K, M	B, C, W	F	S, T	P, R	DAL,MSI,SOA
M55342^10@4#99&	4,990,000	250 (char. E, H) or 500 (char. K, M)	E, H, K, M	B, C, W	F	S, T	P, R	DAL,MSI,SOA
M55342^10@5#10&	5,100,000	250 (char. E, H) or 500 (char. K, M)	E, H, K, M	B, C, W	T, L	S, T	P, R	DAL,MSI,SOA
M55342^10@5#11&	5,110,000	250 (char. E, H) or 500 (char. K, M)	E, H, K, M	B, C, W	F	S, T	P, R	DAL,MSI,SOA
	Resistance	Power	Char.	Term.	Res. Tol./	Level 1	Level 2	
Part Number	Value (Ohms)	Rating (mW)	(^)	Type (@)	Multiplier (#)	FRL (&)	FRL (&)	Manufacturer
M55342^10@5#23&	5,230,000	250 (char. E, H) or 500 (char. K, M)	E, H, K, M	B, C, W	F	S, T	P, R	DAL,MSI,SOA
M55342^10@5#36&	5,360,000	250 (char. E, H) or 500 (char. K, M)	E, H, K, M	B, C, W	F	S, T	P, R	DAL,MSI,SOA
M55342^10@5#49&	5,490,000	250 (char. E, H) or 500 (char. K, M)	E, H, K, M	B, C, W	F	S, T	P, R	DAL,MSI,SOA
M55342^10@5#60&	5,600,000	250 (char. E, H) or 500 (char. K, M)	E, H, K, M	B, C, W	T, L, P	S, T	P, R	DAL,MSI,SOA
M55342^10@5#62&	5,620,000	250 (char. E, H) or 500 (char. K, M)	E, H, K, M	B, C, W	F	S, T	P, R	DAL,MSI
	Resistance	Power	Char.	Term.	Res. Tol./	Level 1	Level 2	
Part Number	Value (Ohms)	Rating (mW)	(^)	Type (@)	Multiplier (#)	FRL (&)	FRL (&)	Manufacturer

MIL-PRF-55342/7 (RM1206) Film Chip Resistors

5.60 Ohms Through 5,620,000 Ohms

	Resistance	Power	Char.	Term.	Res. Tol./	Level 1	Level 2	
Part Number	Value (Ohms)	Rating (mW)	(^)	Type (@)	Multiplier (#)	FRL (&)	FRL (&)	Manufacturer
D55342^07@5#60&	5.60	125 (char. E, H) or 250 (char. K, M)	E, H, K, M	B, C, W	G, J, M	S	P, R	DAL,MSI,SOA
D55342^07@5#62&	5.62	125 (char. E, H) or 250 (char. K, M)	E, H, K, M	B, C, W	D	S	P, R	DAL,MSI,SOA
D55342^07@5#76&	5.76	125 (char. E, H) or 250 (char. K, M)	E, H, K, M	B, C, W	D	S	P, R	DAL,MSI,SOA
D55342^07@5#90&	5.90	125 (char. E, H) or 250 (char. K, M)	E, H, K, M	B, C, W	D	S	P, R	DAL,MSI,SOA
D55342^07@6#04&	6.04	125 (char. E, H) or 250 (char. K, M)	E, H, K, M	B, C, W	D	S	P, R	DAL,MSI,SOA
D55342^07@6#19&	6.19	125 (char. E, H) or 250 (char. K, M)	E, H, K, M	B, C, W	D	S	P, R	DAL,MSI,SOA
D55342^07@6#20&	6.20	125 (char. E, H) or 250 (char. K, M)	E, H, K, M	B, C, W	G, J	S	P, R	DAL,MSI,SOA
D55342^07@6#34&	6.34	125 (char. E, H) or 250 (char. K, M)	E, H, K, M	B, C, W	D	S	P, R	DAL,MSI,SOA
D55342^07@6#49&	6.49	125 (char. E, H) or 250 (char. K, M)	E, H, K, M	B, C, W	D	S	P, R	DAL,MSI,SOA
D55342^07@6#65&	6.65	125 (char. E, H) or 250 (char. K, M)	E, H, K, M	B, C, W	D	S	P, R	DAL,MSI,SOA
D55342^07@6#80&	6.80	125 (char. E, H) or 250 (char. K, M)	E, H, K, M	B, C, W	G, J, M	S	P, R	DAL,MSI,SOA
D55342^07@6#81&	6.81	125 (char. E, H) or 250 (char. K, M)	E, H, K, M	B, C, W	D	S	P, R	DAL,MSI,SOA
D55342^07@6#98&	6.98	125 (char. E, H) or 250 (char. K, M)	E, H, K, M	B, C, W	D	S	P, R	DAL,MSI,SOA

D55342^07@7#15&	7.15	125 (char. E, H) or 250 (char. K, M)	E, H, K, M	B, C, W	D	S	P, R	DAL,MSI,SOA
D55342^07@7#32&	7.32	125 (char. E, H) or 250 (char. K, M)	E, H, K, M	B, C, W	D	S	P, R	DAL,MSI,SOA
D55342^07@7#50&	7.50	125 (char. E, H) or 250 (char. K, M)	E, H, K, M	B, C, W	D, G, J	S	P, R	DAL,MSI,SOA
D55342^07@7#68&	7.68	125 (char. E, H) or 250 (char. K, M)	E, H, K, M	B, C, W	D	S	P, R	DAL,MSI,SOA
D55342^07@7#87&	7.87	125 (char. E, H) or 250 (char. K, M)	E, H, K, M	B, C, W	D	S	P, R	DAL,MSI,SOA
D55342^07@8#06&	8.06	125 (char. E, H) or 250 (char. K, M)	E, H, K, M	B, C, W	D	S	P, R	DAL,MSI,SOA
D55342^07@8#20&	8.20	125 (char. E, H) or 250 (char. K, M)	E, H, K, M	B, C, W	G, J, M	S	P, R	DAL,MSI,SOA
D55342^07@8#25&	8.25	125 (char. E, H) or 250 (char. K, M)	E, H, K, M	B, C, W	D	S	P, R	DAL,MSI,SOA
D55342^07@8#45&	8.45	125 (char. E, H) or 250 (char. K, M)	E, H, K, M	B, C, W	D	S	P, R	DAL,MSI,SOA
D55342^07@8#66&	8.66	125 (char. E, H) or 250 (char. K, M)	E, H, K, M	B, C, W	D	S	P, R	DAL,MSI,SOA
D55342^07@8#87&	8.87	125 (char. E, H) or 250 (char. K, M)	E, H, K, M	B, C, W	D	S	P, R	DAL,MSI,SOA
D55342^07@9#09&	9.09	125 (char. E, H) or 250 (char. K, M)	E, H, K, M	B, C, W	D	S	P, R	DAL,MSI,SOA
D55342^07@9#10&	9.10	125 (char. E, H) or 250 (char. K, M)	E, H, K, M	B, C, W	G, J	S	P, R	DAL,MSI,SOA
D55342^07@9#31&	9.31	125 (char. E, H) or 250 (char. K, M)	E, H, K, M	B, C, W	D	S	P, R	DAL,MSI,SOA
D55342^07@9#53&	9.53	125 (char. E, H) or 250 (char. K, M)	E, H, K, M	B, C, W	D	S	P, R	DAL,MSI,SOA
D55342^07@9#76&	9.76	125 (char. E, H) or 250 (char. K, M)	E, H, K, M	B, C, W	D	S	P, R	DAL,MSI,SOA
D55342^07@10#0&	10.0	125 (char. E, H) or 250 (char. K, M)	E, H, K, M	B, C, W	D, G, J, M	S	P, R	DAL,IRC2,MSI,SOA
D55342^07@10#2&	10.2	125 (char. E, H) or 250 (char. K, M)	E, H, K, M	B, C, W	D	S	P, R	DAL,IRC2,MSI,SOA
D55342^07@10#5&	10.5	125 (char. E, H) or 250 (char. K, M)	E, H, K, M	B, C, W	D	S	P, R	DAL,IRC2,MSI,SOA
D55342^07@10#7&	10.7	125 (char. E, H) or 250 (char. K, M)	E, H, K, M	B, C, W	D	S	P, R	DAL,IRC2,MSI,SOA
D55342^07@11#0&	11.0	125 (char. E, H) or 250 (char. K, M)	E, H, K, M	B, C, W	D, G, J	S	P, R	DAL,IRC2,MSI,SOA
D55342^07@11#3&	11.3	125 (char. E, H) or 250 (char. K, M)	E, H, K, M	B, C, W	D	S	P, R	DAL,IRC2,MSI,SOA
D55342^07@11#5&	11.5	125 (char. E, H) or 250 (char. K, M)	E, H, K, M	B, C, W	D	S	P, R	DAL,IRC2,MSI,SOA
D55342^07@11#8&	11.8	125 (char. E, H) or 250 (char. K, M)	E, H, K, M	B, C, W	D	S	P, R	DAL,IRC2,MSI,SOA
D55342^07@12#0&	12.0	125 (char. E, H) or 250 (char. K, M)	E, H, K, M	B, C, W	G, J, M	S	P, R	DAL,IRC2,MSI,SOA
D55342^07@12#1&	12.1	125 (char. E, H) or 250 (char. K, M)	E, H, K, M	B, C, W	D	S	P, R	DAL,IRC2,MSI,SOA
D55342^07@12#4&	12.4	125 (char. E, H) or 250 (char. K, M)	E, H, K, M	B, C, W	D	S	P, R	DAL,IRC2,MSI,SOA
D55342^07@12#7&	12.7	125 (char. E, H) or 250 (char. K, M)	E, H, K, M	B, C, W	D	S	P, R	DAL,IRC2,MSI,SOA
D55342^07@13#0&	13.0	125 (char. E, H) or 250 (char. K, M)	E, H, K, M	B, C, W	D, G, J	S	P, R	DAL,IRC2,MSI,SOA
D55342^07@13#3&	13.3	125 (char. E, H) or 250 (char. K, M)	E, H, K, M	B, C, W	D	S	P, R	DAL,IRC2,MSI,SOA
D55342^07@13#7&	13.7	125 (char. E, H) or 250 (char. K, M)	E, H, K, M	B, C, W	D	S	P, R	DAL,IRC2,MSI,SOA
D55342^07@14#0&	14.0	125 (char. E, H) or 250 (char. K, M)	E, H, K, M	B, C, W	D	S	P, R	DAL,IRC2,MSI,SOA
D55342^07@14#3&	14.3	125 (char. E, H) or 250 (char. K, M)	E, H, K, M	B, C, W	D	S	P, R	DAL,IRC2,MSI,SOA
D55342^07@14#7&	14.7	125 (char. E, H) or 250 (char. K, M)	E, H, K, M	B, C, W	D	S	P, R	DAL,IRC2,MSI,SOA
D55342^07@15#0&	15.0	125 (char. E, H) or 250 (char. K, M)	E, H, K, M	B, C, W	D, G, J, M	S	P, R	DAL,IRC2,MSI,SOA
D55342^07@15#4&	15.4	125 (char. E, H) or 250 (char. K, M)	E, H, K, M	B, C, W	D	S	P, R	DAL,IRC2,MSI,SOA
D55342^07@15#8&	15.8	125 (char. E, H) or 250 (char. K, M)	E, H, K, M	B, C, W	D	S	P, R	DAL,IRC2,MSI,SOA
D55342^07@16#0&	16.0	125 (char. E, H) or 250 (char. K, M)	E, H, K, M	B, C, W	G, J	S	P, R	DAL,IRC2,MSI,SOA
D55342^07@16#2&	16.2	125 (char. E, H) or 250 (char. K, M)	E, H, K, M	B, C, W	D	S	P, R	DAL,IRC2,MSI,SOA
D55342^07@16#5&	16.5	125 (char. E, H) or 250 (char. K, M)	E, H, K, M	B, C, W	D	S	P, R	DAL,IRC2,MSI,SOA
D55342^07@16#9&	16.9	125 (char. E, H) or 250 (char. K, M)	E, H, K, M	B, C, W	D	S	P, R	DAL,IRC2,MSI,SOA
D55342^07@17#4&	17.4	125 (char. E, H) or 250 (char. K, M)	E, H, K, M	B, C, W	D	S	P, R	DAL,IRC2,MSI,SOA
D55342^07@17#8&	17.8	125 (char. E, H) or 250 (char. K, M)	E, H, K, M	B, C, W	D	S	P, R	DAL,IRC2,MSI,SOA
D55342^07@18#0&	18.0	125 (char. E, H) or 250 (char. K, M)	E, H, K, M	B, C, W	G, J, M	S	P, R	DAL,IRC2,MSI,SOA
D55342^07@18#2&	18.2	125 (char. E, H) or 250 (char. K, M)	E, H, K, M	B, C, W	D	S	P, R	DAL,IRC2,MSI,SOA
D55342^07@18#7&	18.7	125 (char. E, H) or 250 (char. K, M)	E, H, K, M	B, C, W	D	S	P, R	DAL,IRC2,MSI,SOA
D55342^07@19#1&	19.1	125 (char. E, H) or 250 (char. K, M)	E, H, K, M	B, C, W	D	S	P, R	DAL,IRC2,MSI,SOA

D55342^07@19#6&	19.6	125 (char. E, H) or 250 (char. K, M)	E, H, K, M	B, C, W	D	S	P, R	DAL,IRC2,MSI,SOA
D55342^07@20#0&	20.0	125 (char. E, H) or 250 (char. K, M)	E, H, K, M	B, C, W	D, G, J, M	S	P, R	DAL,IRC2,MSI,SOA
D55342^07@20#5&	20.5	125 (char. E, H) or 250 (char. K, M)	E, H, K, M	B, C, W	D	S	P, R	DAL,IRC2,MSI,SOA
D55342^07@21#0&	21.0	125 (char. E, H) or 250 (char. K, M)	E, H, K, M	B, C, W	D	S	P, R	DAL,IRC2,MSI,SOA
D55342^07@21#5&	21.5	125 (char. E, H) or 250 (char. K, M)	E, H, K, M	B, C, W	D	S	P, R	DAL,IRC2,MSI,SOA
D55342^07@22#0&	22.0	125 (char. E, H) or 250 (char. K, M)	E, H, K, M	B, C, W	G, J, M	S	P, R	DAL,IRC2,MSI,SOA
D55342^07@22#1&	22.1	125 (char. E, H) or 250 (char. K, M)	E, H, K, M	B, C, W	D	S	P, R	DAL,IRC2,MSI,SOA
D55342^07@22#6&	22.6	125 (char. E, H) or 250 (char. K, M)	E, H, K, M	B, C, W	D	S	P, R	DAL,IRC2,MSI,SOA
D55342^07@23#2&	23.2	125 (char. E, H) or 250 (char. K, M)	E, H, K, M	B, C, W	D	S	P, R	DAL,IRC2,MSI,SOA
D55342^07@23#7&	23.7	125 (char. E, H) or 250 (char. K, M)	E, H, K, M	B, C, W	D	S	P, R	DAL,IRC2,MSI,SOA
D55342^07@24#0&	24.0	125 (char. E, H) or 250 (char. K, M)	E, H, K, M	B, C, W	G, J	S	P, R	DAL,IRC2,MSI,SOA
D55342^07@24#3&	24.3	125 (char. E, H) or 250 (char. K, M)	E, H, K, M	B, C, W	D	S	P, R	DAL,IRC2,MSI,SOA
D55342^07@24#9&	24.9	125 (char. E, H) or 250 (char. K, M)	E, H, K, M	B, C, W	D	S	P, R	DAL,IRC2,MSI,SOA
D55342^07@25#5&	25.5	125 (char. E, H) or 250 (char. K, M)	E, H, K, M	B, C, W	D	S	P, R	DAL,IRC2,MSI,SOA
D55342^07@26#1&	26.1	125 (char. E, H) or 250 (char. K, M)	E, H, K, M	B, C, W	D	S	P, R	DAL,IRC2,MSI,SOA
D55342^07@26#7&	26.7	125 (char. E, H) or 250 (char. K, M)	E, H, K, M	B, C, W	D	S	P, R	DAL,IRC2,MSI,SOA
D55342^07@27#0&	27.0	125 (char. E, H) or 250 (char. K, M)	E, H, K, M	B, C, W	G, J, M	S	P, R	DAL,IRC2,MSI,SOA
D55342^07@27#4&	27.4	125 (char. E, H) or 250 (char. K, M)	E, H, K, M	B, C, W	D	S	P, R	DAL,IRC2,MSI,SOA
D55342^07@28#0&	28.0	125 (char. E, H) or 250 (char. K, M)	E, H, K, M	B, C, W	D	S	P, R	DAL,IRC2,MSI,SOA
D55342^07@28#7&	28.7	125 (char. E, H) or 250 (char. K, M)	E, H, K, M	B, C, W	D	S	P, R	DAL,IRC2,MSI,SOA
D55342^07@29#4&	29.4	125 (char. E, H) or 250 (char. K, M)	E, H, K, M	B, C, W	D	S	P, R	DAL,IRC2,MSI,SOA
D55342^07@30#0&	30.0	125 (char. E, H) or 250 (char. K, M)	E, H, K, M	B, C, W	G, J	S	P, R	DAL,IRC2,MSI,SOA
D55342^07@30#1&	30.1	125 (char. E, H) or 250 (char. K, M)	E, H, K, M	B, C, W	D	S	P, R	DAL,IRC2,MSI,SOA
D55342^07@30#9&	30.9	125 (char. E, H) or 250 (char. K, M)	E, H, K, M	B, C, W	D	S	P, R	DAL,IRC2,MSI,SOA
D55342^07@31#6&	31.6	125 (char. E, H) or 250 (char. K, M)	E, H, K, M	B, C, W	D	S	P, R	DAL,IRC2,MSI,SOA
D55342^07@32#4&	32.4	125 (char. E, H) or 250 (char. K, M)	E, H, K, M	B, C, W	D	S	P, R	DAL,IRC2,MSI,SOA
D55342^07@33#0&	33.0	125 (char. E, H) or 250 (char. K, M)	E, H, K, M	B, C, W	G, J, M	S	P, R	DAL,IRC2,MSI,SOA
D55342^07@33#2&	33.2	125 (char. E, H) or 250 (char. K, M)	E, H, K, M	B, C, W	D	S	P, R	DAL,IRC2,MSI,SOA
D55342^07@34#0&	34.0	125 (char. E, H) or 250 (char. K, M)	E, H, K, M	B, C, W	D	S	P, R	DAL,IRC2,MSI,SOA
D55342^07@34#8&	34.8	125 (char. E, H) or 250 (char. K, M)	E, H, K, M	B, C, W	D	S	P, R	DAL,IRC2,MSI,SOA
D55342^07@35#7&	35.7	125 (char. E, H) or 250 (char. K, M)	E, H, K, M	B, C, W	D	S	P, R	DAL,IRC2,MSI,SOA
D55342^07@36#0&	36.0	125 (char. E, H) or 250 (char. K, M)	E, H, K, M	B, C, W	G, J	S	P, R	DAL,IRC2,MSI,SOA
D55342^07@36#5&	36.5	125 (char. E, H) or 250 (char. K, M)	E, H, K, M	B, C, W	D	S	P, R	DAL,IRC2,MSI,SOA
D55342^07@37#4&	37.4	125 (char. E, H) or 250 (char. K, M)	E, H, K, M	B, C, W	D	S	P, R	DAL,IRC2,MSI,SOA
D55342^07@38#3&	38.3	125 (char. E, H) or 250 (char. K, M)	E, H, K, M	B, C, W	D	S	P, R	DAL,IRC2,MSI,SOA
D55342^07@39#0&	39.0	125 (char. E, H) or 250 (char. K, M)	E, H, K, M	B, C, W	G, J, M	S	P, R	DAL,IRC2,MSI,SOA
D55342^07@39#2&	39.2	125 (char. E, H) or 250 (char. K, M)	E, H, K, M	B, C, W	D	S	P, R	DAL,IRC2,MSI,SOA
D55342^07@40#2&	40.2	125 (char. E, H) or 250 (char. K, M)	E, H, K, M	B, C, W	D	S	P, R	DAL,IRC2,MSI,SOA
D55342^07@41#2&	41.2	125 (char. E, H) or 250 (char. K, M)	E, H, K, M	B, C, W	D	S	P, R	DAL,IRC2,MSI,SOA
D55342^07@42#2&	42.2	125 (char. E, H) or 250 (char. K, M)	E, H, K, M	B, C, W	D	S	P, R	DAL,IRC2,MSI,SOA
D55342^07@43#0&	43.0	125 (char. E, H) or 250 (char. K, M)	E, H, K, M	B, C, W	G, J	S	P, R	DAL,IRC2,MSI,SOA
D55342^07@43#2&	43.2	125 (char. E, H) or 250 (char. K, M)	E, H, K, M	B, C, W	D	S	P, R	DAL,IRC2,MSI,SOA
D55342^07@44#2&	44.2	125 (char. E, H) or 250 (char. K, M)	E, H, K, M	B, C, W	D	S	P, R	DAL,IRC2,MSI,SOA
D55342^07@45#3&	45.3	125 (char. E, H) or 250 (char. K, M)	E, H, K, M	B, C, W	D	S	P, R	DAL,IRC2,MSI,SOA
D55342^07@46#4&	46.4	125 (char. E, H) or 250 (char. K, M)	E, H, K, M	B, C, W	D	S	P, R	DAL,IRC2,MSI,SOA
D55342^07@47#0&	47.0	125 (char. E, H) or 250 (char. K, M)	E, H, K, M	B, C, W	G, J, M	S	P, R	DAL,IRC2,MSI,SOA
D55342^07@47#5&	47.5	125 (char. E, H) or 250 (char. K, M)	E, H, K, M	B, C, W	D	S	P, R	DAL,IRC2,MSI,SOA

D55342^07@48#7&	48.7	125 (char. E, H) or 250 (char. K, M)	E, H, K, M	B, C, W	D	S	P, R	DAL,IRC2,MSI,SOA
D55342^07@49#9&	49.9	125 (char. E, H) or 250 (char. K, M)	E, H, K, M	B, C, W	D	S	P, R	DAL,IRC2,MSI,SOA
D55342^07@51#0&	51.0	125 (char. E, H) or 250 (char. K, M)	E, H, K, M	B, C, W	G, J	S	P, R	DAL,IRC2,MSI,SOA
D55342^07@51#1&	51.1	125 (char. E, H) or 250 (char. K, M)	E, H, K, M	B, C, W	D	S	P, R	DAL,IRC2,MSI,SOA
D55342^07@52#3&	52.3	125 (char. E, H) or 250 (char. K, M)	E, H, K, M	B, C, W	D	S	P, R	DAL,IRC2,MSI,SOA
D55342^07@53#6&	53.6	125 (char. E, H) or 250 (char. K, M)	E, H, K, M	B, C, W	D	S	P, R	DAL,IRC2,MSI,SOA
D55342^07@54#9&	54.9	125 (char. E, H) or 250 (char. K, M)	E, H, K, M	B, C, W	D	S	P, R	DAL,IRC2,MSI,SOA
D55342^07@56#0&	56.0	125 (char. E, H) or 250 (char. K, M)	E, H, K, M	B, C, W	G, J, M	S	P, R	DAL,IRC2,MSI,SOA
D55342^07@56#2&	56.2	125 (char. E, H) or 250 (char. K, M)	E, H, K, M	B, C, W	D	S	P, R	DAL,IRC2,MSI,SOA
D55342^07@57#6&	57.6	125 (char. E, H) or 250 (char. K, M)	E, H, K, M	B, C, W	D	S	P, R	DAL,IRC2,MSI,SOA
D55342^07@59#0&	59.0	125 (char. E, H) or 250 (char. K, M)	E, H, K, M	B, C, W	D	S	P, R	DAL,IRC2,MSI,SOA
D55342^07@60#4&	60.4	125 (char. E, H) or 250 (char. K, M)	E, H, K, M	B, C, W	D	S	P, R	DAL,IRC2,MSI,SOA
D55342^07@61#9&	61.9	125 (char. E, H) or 250 (char. K, M)	E, H, K, M	B, C, W	D	S	P, R	DAL,IRC2,MSI,SOA
D55342^07@62#0&	62.0	125 (char. E, H) or 250 (char. K, M)	E, H, K, M	B, C, W	G, J	S	P, R	DAL,IRC2,MSI,SOA
D55342^07@63#4&	63.4	125 (char. E, H) or 250 (char. K, M)	E, H, K, M	B, C, W	D	S	P, R	DAL,IRC2,MSI,SOA
D55342^07@64#9&	64.9	125 (char. E, H) or 250 (char. K, M)	E, H, K, M	B, C, W	D	S	P, R	DAL,IRC2,MSI,SOA
D55342^07@66#5&	66.5	125 (char. E, H) or 250 (char. K, M)	E, H, K, M	B, C, W	D	S	P, R	DAL,IRC2,MSI,SOA
D55342^07@68#0&	68.0	125 (char. E, H) or 250 (char. K, M)	E, H, K, M	B, C, W	G, J, M	S	P, R	DAL,IRC2,MSI,SOA
D55342^07@68#1&	68.1	125 (char. E, H) or 250 (char. K, M)	E, H, K, M	B, C, W	D	S	P, R	DAL,IRC2,MSI,SOA
D55342^07@69#8&	69.8	125 (char. E, H) or 250 (char. K, M)	E, H, K, M	B, C, W	D	S	P, R	DAL,IRC2,MSI,SOA
D55342^07@71#5&	71.5	125 (char. E, H) or 250 (char. K, M)	E, H, K, M	B, C, W	D	S	P, R	DAL,IRC2,MSI,SOA
D55342^07@73#2&	73.2	125 (char. E, H) or 250 (char. K, M)	E, H, K, M	B, C, W	D	S	P, R	DAL,IRC2,MSI,SOA
D55342^07@75#0&	75.0	125 (char. E, H) or 250 (char. K, M)	E, H, K, M	B, C, W	D, G, J	S	P, R	DAL,IRC2,MSI,SOA
D55342^07@76#8&	76.8	125 (char. E, H) or 250 (char. K, M)	E, H, K, M	B, C, W	D	S	P, R	DAL,IRC2,MSI,SOA
D55342^07@78#7&	78.7	125 (char. E, H) or 250 (char. K, M)	E, H, K, M	B, C, W	D	S	P, R	DAL,IRC2,MSI,SOA
D55342^07@80#6&	80.6	125 (char. E, H) or 250 (char. K, M)	E, H, K, M	B, C, W	D	S	P, R	DAL,IRC2,MSI,SOA
D55342^07@82#0&	82.0	125 (char. E, H) or 250 (char. K, M)	E, H, K, M	B, C, W	G, J, M	S	P, R	DAL,IRC2,MSI,SOA
D55342^07@82#5&	82.5	125 (char. E, H) or 250 (char. K, M)	E, H, K, M	B, C, W	D	S	P, R	DAL,IRC2,MSI,SOA
D55342^07@84#5&	84.5	125 (char. E, H) or 250 (char. K, M)	E, H, K, M	B, C, W	D	S	P, R	DAL,IRC2,MSI,SOA
D55342^07@86#6&	86.6	125 (char. E, H) or 250 (char. K, M)	E, H, K, M	B, C, W	D	S	P, R	DAL,IRC2,MSI,SOA
D55342^07@88#7&	88.7	125 (char. E, H) or 250 (char. K, M)	E, H, K, M	B, C, W	D	S	P, R	DAL,IRC2,MSI,SOA
D55342^07@90#9&	90.9	125 (char. E, H) or 250 (char. K, M)	E, H, K, M	B, C, W	D	S	P, R	DAL,IRC2,MSI,SOA
D55342^07@91#0&	91.0	125 (char. E, H) or 250 (char. K, M)	E, H, K, M	B, C, W	G, J	S	P, R	DAL,IRC2,MSI,SOA
D55342^07@93#1&	93.1	125 (char. E, H) or 250 (char. K, M)	E, H, K, M	B, C, W	D	S	P, R	DAL,IRC2,MSI,SOA
D55342^07@95#3&	95.3	125 (char. E, H) or 250 (char. K, M)	E, H, K, M	B, C, W	D	S	P, R	DAL,IRC2,MSI,SOA
D55342^07@97#6&	97.6	125 (char. E, H) or 250 (char. K, M)	E, H, K, M	B, C, W	D	S	P, R	DAL,IRC2,MSI,SOA
D55342^07@100#&	100	125 (char. E, H) or 250 (char. K, M)	E, H, K, M	B, C, W	D, G, J, M	S	P, R	DAL,IRC2,MSI,SOA
D55342^07@102#&	102	125 (char. E, H) or 250 (char. K, M)	E, H, K, M	B, C, W	D	S	P, R	DAL,IRC2,MSI,OHM, SOA
D55342^07@105#&	105	125 (char. E, H) or 250 (char. K, M)	E, H, K, M	B, C, W	D	S	P, R	DAL,IRC2,MSI,OHM, SOA
D55342^07@107#&	107	125 (char. E, H) or 250 (char. K, M)	E, H, K, M	B, C, W	D	S	P, R	DAL,IRC2,MSI,OHM, SOA
D55342^07@110#&	110	125 (char. E, H) or 250 (char. K, M)	E, H, K, M	B, C, W	D, G, J	S	P, R	DAL,IRC2,MSI,OHM, SOA
D55342^07@113#&	113	125 (char. E, H) or 250 (char. K, M)	E, H, K, M	B, C, W	D	S	P, R	DAL,IRC2,MSI,OHM, SOA
D55342^07@115#&	115	125 (char. E, H) or 250 (char. K, M)	E, H, K, M	B, C, W	D	S	P, R	DAL,IRC2,MSI,OHM, SOA
D55342^07@118#&	118	125 (char. E, H) or 250 (char. K, M)	E, H, K, M	B, C, W	D	S	P, R	DAL,IRC2,MSI,OHM, SOA
D55342^07@120#&	120	125 (char. E, H) or 250 (char. K, M)	E, H, K, M	B, C, W	G, J, M	S	P, R	DAL,IRC2,MSI,OHM, SOA
D55342^07@121#&	121	125 (char. E, H) or 250 (char. K, M)	E, H, K, M	B, C, W	D	S	P, R	DAL,IRC2,MSI,OHM, SOA
D55342^07@124#&	124	125 (char. E, H) or 250 (char. K, M)	E, H, K, M	B, C, W	D	S	P, R	DAL,IRC2,MSI,OHM, SOA

D55342^07@127#&	127	125 (char. E, H) or 250 (char. K, M)	E, H, K, M	B, C, W	D	S	P, R	DAL,IRC2,MSI,OHM, SOA
D55342^07@130#&	130	125 (char. E, H) or 250 (char. K, M)	E, H, K, M	B, C, W	D, G, J	S	P, R	DAL,IRC2,MSI,OHM, SOA
D55342^07@133#&	133	125 (char. E, H) or 250 (char. K, M)	E, H, K, M	B, C, W	D	S	P, R	DAL,IRC2,MSI,OHM, SOA
D55342^07@137#&	137	125 (char. E, H) or 250 (char. K, M)	E, H, K, M	B, C, W	D	S	P, R	DAL,IRC2,MSI,OHM, SOA
D55342^07@140#&	140	125 (char. E, H) or 250 (char. K, M)	E, H, K, M	B, C, W	D	S	P, R	DAL,IRC2,MSI,OHM, SOA
D55342^07@143#&	143	125 (char. E, H) or 250 (char. K, M)	E, H, K, M	B, C, W	D	S	P, R	DAL,IRC2,MSI,OHM, SOA
D55342^07@147#&	147	125 (char. E, H) or 250 (char. K, M)	E, H, K, M	B, C, W	D	S	P, R	DAL,IRC2,MSI,OHM, SOA
D55342^07@150#&	150	125 (char. E, H) or 250 (char. K, M)	E, H, K, M	B, C, W	D, G, J, M	S	P, R	DAL,IRC2,MSI,OHM, SOA
D55342^07@154#&	154	125 (char. E, H) or 250 (char. K, M)	E, H, K, M	B, C, W	D	S	P, R	DAL,IRC2,MSI,OHM, SOA
D55342^07@158#&	158	125 (char. E, H) or 250 (char. K, M)	E, H, K, M	B, C, W	D	S	P, R	DAL,IRC2,MSI,OHM, SOA
D55342^07@160#&	160	125 (char. E, H) or 250 (char. K, M)	E, H, K, M	B, C, W	G, J	S	P, R	DAL,IRC2,MSI,OHM, SOA
D55342^07@162#&	162	125 (char. E, H) or 250 (char. K, M)	E, H, K, M	B, C, W	D	S	P, R	DAL,IRC2,MSI,OHM, SOA
D55342^07@165#&	165	125 (char. E, H) or 250 (char. K, M)	E, H, K, M	B, C, W	D	S	P, R	DAL,IRC2,MSI,OHM, SOA
D55342^07@169#&	169	125 (char. E, H) or 250 (char. K, M)	E, H, K, M	B, C, W	D	S	P, R	DAL,IRC2,MSI,OHM, SOA
D55342^07@174#&	174	125 (char. E, H) or 250 (char. K, M)	E, H, K, M	B, C, W	D	S	P, R	DAL,IRC2,MSI,OHM, SOA
D55342^07@178#&	178	125 (char. E, H) or 250 (char. K, M)	E, H, K, M	B, C, W	D	S	P, R	DAL,IRC2,MSI,OHM, SOA
D55342^07@180#&	180	125 (char. E, H) or 250 (char. K, M)	E, H, K, M	B, C, W	G, J, M	S	P, R	DAL,IRC2,MSI,OHM, SOA
D55342^07@182#&	182	125 (char. E, H) or 250 (char. K, M)	E, H, K, M	B, C, W	D	S	P, R	DAL,IRC2,MSI,OHM, SOA
D55342^07@187#&	187	125 (char. E, H) or 250 (char. K, M)	E, H, K, M	B, C, W	D	S	P, R	DAL,IRC2,MSI,OHM, SOA
D55342^07@191#&	191	125 (char. E, H) or 250 (char. K, M)	E, H, K, M	B, C, W	D	S	P, R	DAL,IRC2,MSI,OHM, SOA
D55342^07@196#&	196	125 (char. E, H) or 250 (char. K, M)	E, H, K, M	B, C, W	D	S	P, R	DAL,IRC2,MSI,OHM, SOA
D55342^07@200#&	200	125 (char. E, H) or 250 (char. K, M)	E, H, K, M	B, C, W	D, G, J, M	S	P, R	DAL,IRC2,MSI,OHM, SOA
D55342^07@205#&	205	125 (char. E, H) or 250 (char. K, M)	E, H, K, M	B, C, W	D	S	P, R	DAL,IRC2,MSI,OHM, SOA
D55342^07@210#&	210	125 (char. E, H) or 250 (char. K, M)	E, H, K, M	B, C, W	D	S	P, R	DAL,IRC2,MSI,OHM, SOA
D55342^07@215#&	215	125 (char. E, H) or 250 (char. K, M)	E, H, K, M	B, C, W	D	S	P, R	DAL,IRC2,MSI,OHM, SOA
D55342^07@220#&	220	125 (char. E, H) or 250 (char. K, M)	E, H, K, M	B, C, W	G, J, M	S	P, R	DAL,IRC2,MSI,OHM, SOA
D55342^07@221#&	221	125 (char. E, H) or 250 (char. K, M)	E, H, K, M	B, C, W	D	S	P, R	DAL,IRC2,MSI,OHM, SOA
D55342^07@226#&	226	125 (char. E, H) or 250 (char. K, M)	E, H, K, M	B, C, W	D	S	P, R	DAL,IRC2,MSI,OHM, SOA
D55342^07@232#&	232	125 (char. E, H) or 250 (char. K, M)	E, H, K, M	B, C, W	D	S	P, R	DAL,IRC2,MSI,OHM, SOA
D55342^07@237#&	237	125 (char. E, H) or 250 (char. K, M)	E, H, K, M	B, C, W	D	S	P, R	DAL,IRC2,MSI,OHM, SOA
D55342^07@240#&	240	125 (char. E, H) or 250 (char. K, M)	E, H, K, M	B, C, W	G, J	S	P, R	DAL,IRC2,MSI,OHM, SOA
D55342^07@243#&	243	125 (char. E, H) or 250 (char. K, M)	E, H, K, M	B, C, W	D	S	P, R	DAL,IRC2,MSI,OHM, SOA
D55342^07@249#&	249	125 (char. E, H) or 250 (char. K, M)	E, H, K, M	B, C, W	D	S	P, R	DAL,IRC2,MSI,OHM, SOA
D55342^07@255#&	255	125 (char. E, H) or 250 (char. K, M)	E, H, K, M	B, C, W	D	S	P, R	DAL,IRC2,MSI,OHM, SOA
D55342^07@261#&	261	125 (char. E, H) or 250 (char. K, M)	E, H, K, M	B, C, W	D	S	P, R	DAL,IRC2,MSI,OHM, SOA
D55342^07@267#&	267	125 (char. E, H) or 250 (char. K, M)	E, H, K, M	B, C, W	D	S	P, R	DAL,IRC2,MSI,OHM, SOA
D55342^07@270#&	270	125 (char. E, H) or 250 (char. K, M)	E, H, K, M	B, C, W	G, J, M	S	P, R	DAL,IRC2,MSI,OHM, SOA
D55342^07@274#&	274	125 (char. E, H) or 250 (char. K, M)	E, H, K, M	B, C, W	D	S	P, R	DAL,IRC2,MSI,OHM, SOA
D55342^07@280#&	280	125 (char. E, H) or 250 (char. K, M)	E, H, K, M	B, C, W	D	S	P, R	DAL,IRC2,MSI,OHM, SOA
D55342^07@287#&	287	125 (char. E, H) or 250 (char. K, M)	E, H, K, M	B, C, W	D	S	P, R	DAL,IRC2,MSI,OHM, SOA
D55342^07@294#&	294	125 (char. E, H) or 250 (char. K, M)	E, H, K, M	B, C, W	D	S	P, R	DAL,IRC2,MSI,OHM, SOA
D55342^07@300#&	300	125 (char. E, H) or 250 (char. K, M)	E, H, K, M	B, C, W	G, J	S	P, R	DAL,IRC2,MSI,OHM, SOA
D55342^07@301#&	301	125 (char. E, H) or 250 (char. K, M)	E, H, K, M	B, C, W	D	S	P, R	DAL,IRC2,MSI,OHM, SOA
D55342^07@309#&	309	125 (char. E, H) or 250 (char. K, M)	E, H, K, M	B, C, W	D	S	P, R	DAL,IRC2,MSI,OHM, SOA
D55342^07@316#&	316	125 (char. E, H) or 250 (char. K, M)	E, H, K, M	B, C, W	D	S	P, R	DAL,IRC2,MSI,OHM, SOA
D55342^07@324#&	324	125 (char. E, H) or 250 (char. K, M)	E, H, K, M	B, C, W	D	S	P, R	DAL,IRC2,MSI,OHM, SOA
D55342^07@330#&	330	125 (char. E, H) or 250 (char. K, M)	E, H, K, M	B, C, W	G, J, M	S	P, R	DAL,IRC2,MSI,OHM, SOA

D55342^07@332#&	332	125 (char. E, H) or 250 (char. K, M)	E, H, K, M	B, C, W	D	S	P, R	DAL,IRC2,MSI,OHM, SOA
D55342^07@340#&	340	125 (char. E, H) or 250 (char. K, M)	E, H, K, M	B, C, W	D	S	P, R	DAL,IRC2,MSI,OHM, SOA
D55342^07@348#&	348	125 (char. E, H) or 250 (char. K, M)	E, H, K, M	B, C, W	D	S	P, R	DAL,IRC2,MSI,OHM, SOA
D55342^07@357#&	357	125 (char. E, H) or 250 (char. K, M)	E, H, K, M	B, C, W	D	S	P, R	DAL,IRC2,MSI,OHM, SOA
D55342^07@360#&	360	125 (char. E, H) or 250 (char. K, M)	E, H, K, M	B, C, W	G, J	S	P, R	DAL,IRC2,MSI,OHM, SOA
D55342^07@365#&	365	125 (char. E, H) or 250 (char. K, M)	E, H, K, M	B, C, W	D	S	P, R	DAL,IRC2,MSI,OHM, SOA
D55342^07@374#&	374	125 (char. E, H) or 250 (char. K, M)	E, H, K, M	B, C, W	D	S	P, R	DAL,IRC2,MSI,OHM, SOA
D55342^07@383#&	383	125 (char. E, H) or 250 (char. K, M)	E, H, K, M	B, C, W	D	S	P, R	DAL,IRC2,MSI,OHM, SOA
D55342^07@390#&	390	125 (char. E, H) or 250 (char. K, M)	E, H, K, M	B, C, W	G, J, M	S	P, R	DAL,IRC2,MSI,OHM, SOA
D55342^07@392#&	392	125 (char. E, H) or 250 (char. K, M)	E, H, K, M	B, C, W	D	S	P, R	DAL,IRC2,MSI,OHM, SOA
D55342^07@402#&	402	125 (char. E, H) or 250 (char. K, M)	E, H, K, M	B, C, W	D	S	P, R	DAL,IRC2,MSI,OHM, SOA
D55342^07@412#&	412	125 (char. E, H) or 250 (char. K, M)	E, H, K, M	B, C, W	D	S	P, R	DAL,IRC2,MSI,OHM, SOA
D55342^07@422#&	422	125 (char. E, H) or 250 (char. K, M)	E, H, K, M	B, C, W	D	S	P, R	DAL,IRC2,MSI,OHM, SOA
D55342^07@430#&	430	125 (char. E, H) or 250 (char. K, M)	E, H, K, M	B, C, W	G, J	S	P, R	DAL,IRC2,MSI,OHM, SOA
D55342^07@432#&	432	125 (char. E, H) or 250 (char. K, M)	E, H, K, M	B, C, W	D	S	P, R	DAL,IRC2,MSI,OHM, SOA
D55342^07@442#&	442	125 (char. E, H) or 250 (char. K, M)	E, H, K, M	B, C, W	D	S	P, R	DAL,IRC2,MSI,OHM, SOA
D55342^07@453#&	453	125 (char. E, H) or 250 (char. K, M)	E, H, K, M	B, C, W	D	S	P, R	DAL,IRC2,MSI,OHM, SOA
D55342^07@464#&	464	125 (char. E, H) or 250 (char. K, M)	E, H, K, M	B, C, W	D	S	P, R	DAL,IRC2,MSI,OHM, SOA
D55342^07@470#&	470	125 (char. E, H) or 250 (char. K, M)	E, H, K, M	B, C, W	G, J, M	S	P, R	DAL,IRC2,MSI,OHM, SOA
D55342^07@475#&	475	125 (char. E, H) or 250 (char. K, M)	E, H, K, M	B, C, W	D	S	P, R	DAL,IRC2,MSI,OHM, SOA
D55342^07@487#&	487	125 (char. E, H) or 250 (char. K, M)	E, H, K, M	B, C, W	D	S	P, R	DAL,IRC2,MSI,OHM, SOA
D55342^07@499#&	499	125 (char. E, H) or 250 (char. K, M)	E, H, K, M	B, C, W	D	S	P, R	DAL,IRC2,MSI,OHM, SOA
D55342^07@510#&	510	125 (char. E, H) or 250 (char. K, M)	E, H, K, M	B, C, W	G, J	S	P, R	DAL,IRC2,MSI,OHM, SOA
D55342^07@511#&	511	125 (char. E, H) or 250 (char. K, M)	E, H, K, M	B, C, W	D	S	P, R	DAL,IRC2,MSI,OHM, SOA
D55342^07@523#&	523	125 (char. E, H) or 250 (char. K, M)	E, H, K, M	B, C, W	D	S	P, R	DAL,IRC2,MSI,OHM, SOA
D55342^07@536#&	536	125 (char. E, H) or 250 (char. K, M)	E, H, K, M	B, C, W	D	S	P, R	DAL,IRC2,MSI,OHM, SOA
D55342^07@549#&	549	125 (char. E, H) or 250 (char. K, M)	E, H, K, M	B, C, W	D	S	P, R	DAL,IRC2,MSI,OHM, SOA
D55342^07@560#&	560	125 (char. E, H) or 250 (char. K, M)	E, H, K, M	B, C, W	G, J, M	S	P, R	DAL,IRC2,MSI,OHM, SOA
D55342^07@562#&	562	125 (char. E, H) or 250 (char. K, M)	E, H, K, M	B, C, W	D	S	P, R	DAL,IRC2,MSI,OHM, SOA
D55342^07@576#&	576	125 (char. E, H) or 250 (char. K, M)	E, H, K, M	B, C, W	D	S	P, R	DAL,IRC2,MSI,OHM, SOA
D55342^07@590#&	590	125 (char. E, H) or 250 (char. K, M)	E, H, K, M	B, C, W	D	S	P, R	DAL,IRC2,MSI,OHM, SOA
D55342^07@604#&	604	125 (char. E, H) or 250 (char. K, M)	E, H, K, M	B, C, W	D	S	P, R	DAL,IRC2,MSI,OHM, SOA
D55342^07@619#&	619	125 (char. E, H) or 250 (char. K, M)	E, H, K, M	B, C, W	D	S	P, R	DAL,IRC2,MSI,OHM, SOA
D55342^07@620#&	620	125 (char. E, H) or 250 (char. K, M)	E, H, K, M	B, C, W	G, J	S	P, R	DAL,IRC2,MSI,OHM, SOA
D55342^07@634#&	634	125 (char. E, H) or 250 (char. K, M)	E, H, K, M	B, C, W	D	S	P, R	DAL,IRC2,MSI,OHM, SOA
D55342^07@649#&	649	125 (char. E, H) or 250 (char. K, M)	E, H, K, M	B, C, W	D	S	P, R	DAL,IRC2,MSI,OHM, SOA
D55342^07@665#&	665	125 (char. E, H) or 250 (char. K, M)	E, H, K, M	B, C, W	D	S	P, R	DAL,IRC2,MSI,OHM, SOA
D55342^07@680#&	680	125 (char. E, H) or 250 (char. K, M)	E, H, K, M	B, C, W	G, J, M	S	P, R	DAL,IRC2,MSI,OHM, SOA
D55342^07@681#&	681	125 (char. E, H) or 250 (char. K, M)	E, H, K, M	B, C, W	D	S	P, R	DAL,IRC2,MSI,OHM, SOA
D55342^07@698#&	698	125 (char. E, H) or 250 (char. K, M)	E, H, K, M	B, C, W	D	S	P, R	DAL,IRC2,MSI,OHM, SOA
D55342^07@715#&	715	125 (char. E, H) or 250 (char. K, M)	E, H, K, M	B, C, W	D	S	P, R	DAL,IRC2,MSI,OHM, SOA
D55342^07@732#&	732	125 (char. E, H) or 250 (char. K, M)	E, H, K, M	B, C, W	D	S	P, R	DAL,IRC2,MSI,OHM, SOA
D55342^07@750#&	750	125 (char. E, H) or 250 (char. K, M)	E, H, K, M	B, C, W	D, G, J	S	P, R	DAL,IRC2,MSI,OHM, SOA
D55342^07@768#&	768	125 (char. E, H) or 250 (char. K, M)	E, H, K, M	B, C, W	D	S	P, R	DAL,IRC2,MSI,OHM, SOA
D55342^07@787#&	787	125 (char. E, H) or 250 (char. K, M)	E, H, K, M	B, C, W	D	S	P, R	DAL,IRC2,MSI,OHM, SOA
D55342^07@806#&	806	125 (char. E, H) or 250 (char. K, M)	E, H, K, M	B, C, W	D	S	P, R	DAL,IRC2,MSI,OHM, SOA
D55342^07@820#&	820	125 (char. E, H) or 250 (char. K, M)	E, H, K, M	B, C, W	G, J, M	S	P, R	DAL,IRC2,MSI,OHM, SOA

D55342^07@825#&	825	125 (char. E, H) or 250 (char. K, M)	E, H, K, M	B, C, W	D	S	P, R	DAL,IRC2,MSI,OHM, SOA
D55342^07@845#&	845	125 (char. E, H) or 250 (char. K, M)	E, H, K, M	B, C, W	D	S	P, R	DAL,IRC2,MSI,OHM, SOA
D55342^07@866#&	866	125 (char. E, H) or 250 (char. K, M)	E, H, K, M	B, C, W	D	S	P, R	DAL,IRC2,MSI,OHM, SOA
D55342^07@887#&	887	125 (char. E, H) or 250 (char. K, M)	E, H, K, M	B, C, W	D	S	P, R	DAL,IRC2,MSI,OHM, SOA
D55342^07@909#&	909	125 (char. E, H) or 250 (char. K, M)	E, H, K, M	B, C, W	D	S	P, R	DAL,IRC2,MSI,OHM, SOA
D55342^07@910#&	910	125 (char. E, H) or 250 (char. K, M)	E, H, K, M	B, C, W	G, J	S	P, R	DAL,IRC2,MSI,OHM, SOA
D55342^07@931#&	931	125 (char. E, H) or 250 (char. K, M)	E, H, K, M	B, C, W	D	S	P, R	DAL,IRC2,MSI,OHM, SOA
D55342^07@953#&	953	125 (char. E, H) or 250 (char. K, M)	E, H, K, M	B, C, W	D	S	P, R	DAL,IRC2,MSI,OHM, SOA
D55342^07@976#&	976	125 (char. E, H) or 250 (char. K, M)	E, H, K, M	B, C, W	D	S	P, R	DAL,IRC2,MSI,OHM, SOA
D55342^07@1#00&	1,000	125 (char. E, H) or 250 (char. K, M)	E, H, K, M	B, C, W	E, H, K, N	S	P, R	DAL,IRC2,MSI,OHM, SOA
D55342^07@1#02&	1,020	125 (char. E, H) or 250 (char. K, M)	E, H, K, M	B, C, W	E	S	P, R	DAL,IRC2,MSI,OHM, SOA
D55342^07@1#05&	1,050	125 (char. E, H) or 250 (char. K, M)	E, H, K, M	B, C, W	E	S	P, R	DAL,IRC2,MSI,OHM, SOA
D55342^07@1#07&	1,070	125 (char. E, H) or 250 (char. K, M)	E, H, K, M	B, C, W	E	S	P, R	DAL,IRC2,MSI,OHM, SOA
D55342^07@1#10&	1,100	125 (char. E, H) or 250 (char. K, M)	E, H, K, M	B, C, W	E, H, K	S	P, R	DAL,IRC2,MSI,OHM, SOA
D55342^07@1#13&	1,130	125 (char. E, H) or 250 (char. K, M)	E, H, K, M	B, C, W	E	S	P, R	DAL,IRC2,MSI,OHM, SOA
D55342^07@1#15&	1,150	125 (char. E, H) or 250 (char. K, M)	E, H, K, M	B, C, W	E	S	P, R	DAL,IRC2,MSI,OHM, SOA
D55342^07@1#18&	1,180	125 (char. E, H) or 250 (char. K, M)	E, H, K, M	B, C, W	E	S	P, R	DAL,IRC2,MSI,OHM, SOA
D55342^07@1#20&	1,200	125 (char. E, H) or 250 (char. K, M)	E, H, K, M	B, C, W	H, K, N	S	P, R	DAL,IRC2,MSI,OHM, SOA
D55342^07@1#21&	1,210	125 (char. E, H) or 250 (char. K, M)	E, H, K, M	B, C, W	E	S	P, R	DAL,IRC2,MSI,OHM, SOA
D55342^07@1#24&	1,240	125 (char. E, H) or 250 (char. K, M)	E, H, K, M	B, C, W	E	S	P, R	DAL,IRC2,MSI,OHM, SOA
D55342^07@1#27&	1,270	125 (char. E, H) or 250 (char. K, M)	E, H, K, M	B, C, W	E	S	P, R	DAL,IRC2,MSI,OHM, SOA
D55342^07@1#30&	1,300	125 (char. E, H) or 250 (char. K, M)	E, H, K, M	B, C, W	E, H, K	S	P, R	DAL,IRC2,MSI,OHM, SOA
D55342^07@1#33&	1,330	125 (char. E, H) or 250 (char. K, M)	E, H, K, M	B, C, W	E	S	P, R	DAL,IRC2,MSI,OHM, SOA
D55342^07@1#37&	1,370	125 (char. E, H) or 250 (char. K, M)	E, H, K, M	B, C, W	E	S	P, R	DAL,IRC2,MSI,OHM, SOA
D55342^07@1#40&	1,400	125 (char. E, H) or 250 (char. K, M)	E, H, K, M	B, C, W	E	S	P, R	DAL,IRC2,MSI,OHM, SOA
D55342^07@1#43&	1,430	125 (char. E, H) or 250 (char. K, M)	E, H, K, M	B, C, W	E	S	P, R	DAL,IRC2,MSI,OHM, SOA
D55342^07@1#47&	1,470	125 (char. E, H) or 250 (char. K, M)	E, H, K, M	B, C, W	E	S	P, R	DAL,IRC2,MSI,OHM, SOA
D55342^07@1#50&	1,500	125 (char. E, H) or 250 (char. K, M)	E, H, K, M	B, C, W	E, H, K, N	S	P, R	DAL,IRC2,MSI,OHM, SOA
D55342^07@1#54&	1,540	125 (char. E, H) or 250 (char. K, M)	E, H, K, M	B, C, W	E	S	P, R	DAL,IRC2,MSI,OHM, SOA
D55342^07@1#58&	1,580	125 (char. E, H) or 250 (char. K, M)	E, H, K, M	B, C, W	E	S	P, R	DAL,IRC2,MSI,OHM, SOA
D55342^07@1#60&	1,600	125 (char. E, H) or 250 (char. K, M)	E, H, K, M	B, C, W	H, K	S	P, R	DAL,IRC2,MSI,OHM, SOA
D55342^07@1#62&	1,620	125 (char. E, H) or 250 (char. K, M)	E, H, K, M	B, C, W	E	S	P, R	DAL,IRC2,MSI,OHM, SOA
D55342^07@1#65&	1,650	125 (char. E, H) or 250 (char. K, M)	E, H, K, M	B, C, W	E	S	P, R	DAL,IRC2,MSI,OHM, SOA
D55342^07@1#69&	1,690	125 (char. E, H) or 250 (char. K, M)	E, H, K, M	B, C, W	E	S	P, R	DAL,IRC2,MSI,OHM, SOA
D55342^07@1#74&	1,740	125 (char. E, H) or 250 (char. K, M)	E, H, K, M	B, C, W	E	S	P, R	DAL,IRC2,MSI,OHM, SOA
D55342^07@1#78&	1,780	125 (char. E, H) or 250 (char. K, M)	E, H, K, M	B, C, W	E	S	P, R	DAL,IRC2,MSI,OHM, SOA
D55342^07@1#80&	1,800	125 (char. E, H) or 250 (char. K, M)	E, H, K, M	B, C, W	H, K, N	S	P, R	DAL,IRC2,MSI,OHM, SOA
D55342^07@1#82&	1,820	125 (char. E, H) or 250 (char. K, M)	E, H, K, M	B, C, W	E	S	P, R	DAL,IRC2,MSI,OHM, SOA
D55342^07@1#87&	1,870	125 (char. E, H) or 250 (char. K, M)	E, H, K, M	B, C, W	E	S	P, R	DAL,IRC2,MSI,OHM, SOA
D55342^07@1#91&	1,910	125 (char. E, H) or 250 (char. K, M)	E, H, K, M	B, C, W	E	S	P, R	DAL,IRC2,MSI,OHM, SOA
D55342^07@1#96&	1,960	125 (char. E, H) or 250 (char. K, M)	E, H, K, M	B, C, W	E	S	P, R	DAL,IRC2,MSI,OHM, SOA
D55342^07@2#00&	2,000	125 (char. E, H) or 250 (char. K, M)	E, H, K, M	B, C, W	E, H, K, N	S	P, R	DAL,IRC2,MSI,OHM, SOA
D55342^07@2#05&	2,050	125 (char. E, H) or 250 (char. K, M)	E, H, K, M	B, C, W	E	S	P, R	DAL,IRC2,MSI,OHM, SOA
D55342^07@2#10&	2,100	125 (char. E, H) or 250 (char. K, M)	E, H, K, M	B, C, W	E	S	P, R	DAL,IRC2,MSI,OHM, SOA
D55342^07@2#15&	2,150	125 (char. E, H) or 250 (char. K, M)	E, H, K, M	B, C, W	E	S	P, R	DAL,IRC2,MSI,OHM, SOA
D55342^07@2#20&	2,200	125 (char. E, H) or 250 (char. K, M)	E, H, K, M	B, C, W	H, K, N	S	P, R	DAL,IRC2,MSI,OHM, SOA
D55342^07@2#21&	2,210	125 (char. E, H) or 250 (char. K, M)	E, H, K, M	B, C, W	E	S	P, R	DAL,IRC2,MSI,OHM, SOA

D55342^07@2#26&	2,260	125 (char. E, H) or 250 (char. K, M)	E, H, K, M	B, C, W	E	S	P, R	DAL,IRC2,MSI,OHM, SOA
D55342^07@2#32&	2,320	125 (char. E, H) or 250 (char. K, M)	E, H, K, M	B, C, W	E	S	P, R	DAL,IRC2,MSI,OHM, SOA
D55342^07@2#37&	2,370	125 (char. E, H) or 250 (char. K, M)	E, H, K, M	B, C, W	E	S	P, R	DAL,IRC2,MSI,OHM, SOA
D55342^07@2#40&	2,400	125 (char. E, H) or 250 (char. K, M)	E, H, K, M	B, C, W	H, K	S	P, R	DAL,IRC2,MSI,OHM, SOA
D55342^07@2#43&	2,430	125 (char. E, H) or 250 (char. K, M)	E, H, K, M	B, C, W	E	S	P, R	DAL,IRC2,MSI,OHM, SOA
D55342^07@2#49&	2,490	125 (char. E, H) or 250 (char. K, M)	E, H, K, M	B, C, W	E	S	P, R	DAL,IRC2,MSI,OHM, SOA
D55342^07@2#55&	2,550	125 (char. E, H) or 250 (char. K, M)	E, H, K, M	B, C, W	E	S	P, R	DAL,IRC2,MSI,OHM, SOA
D55342^07@2#61&	2,610	125 (char. E, H) or 250 (char. K, M)	E, H, K, M	B, C, W	E	S	P, R	DAL,IRC2,MSI,OHM, SOA
D55342^07@2#67&	2,670	125 (char. E, H) or 250 (char. K, M)	E, H, K, M	B, C, W	E	S	P, R	DAL,IRC2,MSI,OHM, SOA
D55342^07@2#70&	2,700	125 (char. E, H) or 250 (char. K, M)	E, H, K, M	B, C, W	H, K, N	S	P, R	DAL,IRC2,MSI,OHM, SOA
D55342^07@2#74&	2,740	125 (char. E, H) or 250 (char. K, M)	E, H, K, M	B, C, W	E	S	P, R	DAL,IRC2,MSI,OHM, SOA
D55342^07@2#80&	2,800	125 (char. E, H) or 250 (char. K, M)	E, H, K, M	B, C, W	E	S	P, R	DAL,IRC2,MSI,OHM, SOA
D55342^07@2#87&	2,870	125 (char. E, H) or 250 (char. K, M)	E, H, K, M	B, C, W	E	S	P, R	DAL,IRC2,MSI,OHM, SOA
D55342^07@2#94&	2,940	125 (char. E, H) or 250 (char. K, M)	E, H, K, M	B, C, W	E	S	P, R	DAL,IRC2,MSI,OHM, SOA
D55342^07@3#00&	3,000	125 (char. E, H) or 250 (char. K, M)	E, H, K, M	B, C, W	H, K	S	P, R	DAL,IRC2,MSI,OHM, SOA
D55342^07@3#01&	3,010	125 (char. E, H) or 250 (char. K, M)	E, H, K, M	B, C, W	E	S	P, R	DAL,IRC2,MSI,OHM, SOA
D55342^07@3#09&	3,090	125 (char. E, H) or 250 (char. K, M)	E, H, K, M	B, C, W	E	S	P, R	DAL,IRC2,MSI,OHM, SOA
D55342^07@3#16&	3,160	125 (char. E, H) or 250 (char. K, M)	E, H, K, M	B, C, W	E	S	P, R	DAL,IRC2,MSI,OHM, SOA
D55342^07@3#24&	3,240	125 (char. E, H) or 250 (char. K, M)	E, H, K, M	B, C, W	E	S	P, R	DAL,IRC2,MSI,OHM, SOA
D55342^07@3#30&	3,300	125 (char. E, H) or 250 (char. K, M)	E, H, K, M	B, C, W	H, K, N	S	P, R	DAL,IRC2,MSI,OHM, SOA
D55342^07@3#32&	3,320	125 (char. E, H) or 250 (char. K, M)	E, H, K, M	B, C, W	E	S	P, R	DAL,IRC2,MSI,OHM, SOA
D55342^07@3#40&	3,400	125 (char. E, H) or 250 (char. K, M)	E, H, K, M	B, C, W	E	S	P, R	DAL,IRC2,MSI,OHM, SOA
D55342^07@3#48&	3,480	125 (char. E, H) or 250 (char. K, M)	E, H, K, M	B, C, W	E	S	P, R	DAL,IRC2,MSI,OHM, SOA
D55342^07@3#57&	3,570	125 (char. E, H) or 250 (char. K, M)	E, H, K, M	B, C, W	E	S	P, R	DAL,IRC2,MSI,OHM, SOA
D55342^07@3#60&	3,600	125 (char. E, H) or 250 (char. K, M)	E, H, K, M	B, C, W	H, K	S	P, R	DAL,IRC2,MSI,OHM, SOA
D55342^07@3#65&	3,650	125 (char. E, H) or 250 (char. K, M)	E, H, K, M	B, C, W	E	S	P, R	DAL,IRC2,MSI,OHM, SOA
D55342^07@3#74&	3,740	125 (char. E, H) or 250 (char. K, M)	E, H, K, M	B, C, W	E	S	P, R	DAL,IRC2,MSI,OHM, SOA
D55342^07@3#83&	3,830	125 (char. E, H) or 250 (char. K, M)	E, H, K, M	B, C, W	E	S	P, R	DAL,IRC2,MSI,OHM, SOA
D55342^07@3#90&	3,900	125 (char. E, H) or 250 (char. K, M)	E, H, K, M	B, C, W	H, K, N	S	P, R	DAL,IRC2,MSI,OHM, SOA
D55342^07@3#92&	3,920	125 (char. E, H) or 250 (char. K, M)	E, H, K, M	B, C, W	E	S	P, R	DAL,IRC2,MSI,OHM, SOA
D55342^07@4#02&	4,020	125 (char. E, H) or 250 (char. K, M)	E, H, K, M	B, C, W	E	S	P, R	DAL,IRC2,MSI,OHM, SOA
D55342^07@4#12&	4,120	125 (char. E, H) or 250 (char. K, M)	E, H, K, M	B, C, W	E	S	P, R	DAL,IRC2,MSI,OHM, SOA
D55342^07@4#22&	4,220	125 (char. E, H) or 250 (char. K, M)	E, H, K, M	B, C, W	E	S	P, R	DAL,IRC2,MSI,OHM, SOA
D55342^07@4#30&	4,300	125 (char. E, H) or 250 (char. K, M)	E, H, K, M	B, C, W	H, K	S	P, R	DAL,IRC2,MSI,OHM, SOA
D55342^07@4#32&	4,320	125 (char. E, H) or 250 (char. K, M)	E, H, K, M	B, C, W	E	S	P, R	DAL,IRC2,MSI,OHM, SOA
D55342^07@4#42&	4,420	125 (char. E, H) or 250 (char. K, M)	E, H, K, M	B, C, W	E	S	P, R	DAL,IRC2,MSI,OHM, SOA
D55342^07@4#53&	4,530	125 (char. E, H) or 250 (char. K, M)	E, H, K, M	B, C, W	E	S	P, R	DAL,IRC2,MSI,OHM, SOA
D55342^07@4#64&	4,640	125 (char. E, H) or 250 (char. K, M)	E, H, K, M	B, C, W	E	S	P, R	DAL,IRC2,MSI,OHM, SOA
D55342^07@4#70&	4,700	125 (char. E, H) or 250 (char. K, M)	E, H, K, M	B, C, W	H, K, N	S	P, R	DAL,IRC2,MSI,OHM, SOA
D55342^07@4#75&	4,750	125 (char. E, H) or 250 (char. K, M)	E, H, K, M	B, C, W	E	S	P, R	DAL,IRC2,MSI,OHM, SOA
D55342^07@4#87&	4,870	125 (char. E, H) or 250 (char. K, M)	E, H, K, M	B, C, W	E	S	P, R	DAL,IRC2,MSI,OHM, SOA
D55342^07@4#99&	4,990	125 (char. E, H) or 250 (char. K, M)	E, H, K, M	B, C, W	E	S	P, R	DAL,IRC2,MSI,OHM, SOA
D55342^07@5#10&	5,100	125 (char. E, H) or 250 (char. K, M)	E, H, K, M	B, C, W	H, K	S	P, R	DAL,IRC2,MSI,OHM, SOA
D55342^07@5#11&	5,110	125 (char. E, H) or 250 (char. K, M)	E, H, K, M	B, C, W	E	S	P, R	DAL,IRC2,MSI,OHM, SOA
D55342^07@5#23&	5,230	125 (char. E, H) or 250 (char. K, M)	E, H, K, M	B, C, W	E	S	P, R	DAL,IRC2,MSI,OHM, SOA
D55342^07@5#36&	5,360	125 (char. E, H) or 250 (char. K, M)	E, H, K, M	B, C, W	E	S	P, R	DAL,IRC2,MSI,OHM, SOA
D55342^07@5#49&	5,490	125 (char. E, H) or 250 (char. K, M)	E, H, K, M	B, C, W	E	S	P, R	DAL,IRC2,MSI,OHM, SOA

D55342^07@5#60&	5,600	125 (char. E, H) or 250 (char. K, M)	E, H, K, M	B, C, W	H, K, N	S	P, R	DAL,IRC2,MSI,OHM, SOA
D55342^07@5#62&	5,620	125 (char. E, H) or 250 (char. K, M)	E, H, K, M	B, C, W	E	S	P, R	DAL,IRC2,MSI,OHM, SOA
D55342^07@5#76&	5,760	125 (char. E, H) or 250 (char. K, M)	E, H, K, M	B, C, W	E	S	P, R	DAL,IRC2,MSI,OHM, SOA
D55342^07@5#90&	5,900	125 (char. E, H) or 250 (char. K, M)	E, H, K, M	B, C, W	E	S	P, R	DAL,IRC2,MSI,OHM, SOA
D55342^07@6#04&	6,040	125 (char. E, H) or 250 (char. K, M)	E, H, K, M	B, C, W	E	S	P, R	DAL,IRC2,MSI,OHM, SOA
D55342^07@6#19&	6,190	125 (char. E, H) or 250 (char. K, M)	E, H, K, M	B, C, W	E	S	P, R	DAL,IRC2,MSI,OHM, SOA
D55342^07@6#20&	6,200	125 (char. E, H) or 250 (char. K, M)	E, H, K, M	B, C, W	H, K	S	P, R	DAL,IRC2,MSI,OHM, SOA
D55342^07@6#34&	6,340	125 (char. E, H) or 250 (char. K, M)	E, H, K, M	B, C, W	E	S	P, R	DAL,IRC2,MSI,OHM, SOA
D55342^07@6#49&	6,490	125 (char. E, H) or 250 (char. K, M)	E, H, K, M	B, C, W	E	S	P, R	DAL,IRC2,MSI,OHM, SOA
D55342^07@6#65&	6,650	125 (char. E, H) or 250 (char. K, M)	E, H, K, M	B, C, W	E	S	P, R	DAL,IRC2,MSI,OHM, SOA
D55342^07@6#80&	6,800	125 (char. E, H) or 250 (char. K, M)	E, H, K, M	B, C, W	H, K, N	S	P, R	DAL,IRC2,MSI,OHM, SOA
D55342^07@6#81&	6,810	125 (char. E, H) or 250 (char. K, M)	E, H, K, M	B, C, W	E	S	P, R	DAL,IRC2,MSI,OHM, SOA
D55342^07@6#98&	6,980	125 (char. E, H) or 250 (char. K, M)	E, H, K, M	B, C, W	E	S	P, R	DAL,IRC2,MSI,OHM, SOA
D55342^07@7#15&	7,150	125 (char. E, H) or 250 (char. K, M)	E, H, K, M	B, C, W	E	S	P, R	DAL,IRC2,MSI,OHM, SOA
D55342^07@7#32&	7,320	125 (char. E, H) or 250 (char. K, M)	E, H, K, M	B, C, W	E	S	P, R	DAL,IRC2,MSI,OHM, SOA
D55342^07@7#50&	7,500	125 (char. E, H) or 250 (char. K, M)	E, H, K, M	B, C, W	E, H, K	S	P, R	DAL,IRC2,MSI,OHM, SOA
D55342^07@7#68&	7,680	125 (char. E, H) or 250 (char. K, M)	E, H, K, M	B, C, W	E	S	P, R	DAL,IRC2,MSI,OHM, SOA
D55342^07@7#87&	7,870	125 (char. E, H) or 250 (char. K, M)	E, H, K, M	B, C, W	E	S	P, R	DAL,IRC2,MSI,OHM, SOA
D55342^07@8#06&	8,060	125 (char. E, H) or 250 (char. K, M)	E, H, K, M	B, C, W	E	S	P, R	DAL,IRC2,MSI,OHM, SOA
D55342^07@8#20&	8,200	125 (char. E, H) or 250 (char. K, M)	E, H, K, M	B, C, W	H, K, N	S	P, R	DAL,IRC2,MSI,OHM, SOA
D55342^07@8#25&	8,250	125 (char. E, H) or 250 (char. K, M)	E, H, K, M	B, C, W	E	S	P, R	DAL,IRC2,MSI,OHM, SOA
D55342^07@8#45&	8,450	125 (char. E, H) or 250 (char. K, M)	E, H, K, M	B, C, W	E	S	P, R	DAL,IRC2,MSI,OHM, SOA
D55342^07@8#66&	8,660	125 (char. E, H) or 250 (char. K, M)	E, H, K, M	B, C, W	E	S	P, R	DAL,IRC2,MSI,OHM, SOA
D55342^07@8#87&	8,870	125 (char. E, H) or 250 (char. K, M)	E, H, K, M	B, C, W	E	S	P, R	DAL,IRC2,MSI,OHM, SOA
D55342^07@9#09&	9,090	125 (char. E, H) or 250 (char. K, M)	E, H, K, M	B, C, W	E	S	P, R	DAL,IRC2,MSI,OHM, SOA
D55342^07@9#10&	9,100	125 (char. E, H) or 250 (char. K, M)	E, H, K, M	B, C, W	H, K	S	P, R	DAL,IRC2,MSI,OHM, SOA
D55342^07@9#31&	9,310	125 (char. E, H) or 250 (char. K, M)	E, H, K, M	B, C, W	E	S	P, R	DAL,IRC2,MSI,OHM, SOA
D55342^07@9#53&	9,530	125 (char. E, H) or 250 (char. K, M)	E, H, K, M	B, C, W	E	S	P, R	DAL,IRC2,MSI,OHM, SOA
D55342^07@9#76&	9,760	125 (char. E, H) or 250 (char. K, M)	E, H, K, M	B, C, W	E	S	P, R	DAL,IRC2,MSI,OHM, SOA
D55342^07@10#0&	10,000	125 (char. E, H) or 250 (char. K, M)	E, H, K, M	B, C, W	E, H, K, N	S	P, R	DAL,IRC2,MSI,OHM, SOA
D55342^07@10#2&	10,200	125 (char. E, H) or 250 (char. K, M)	E, H, K, M	B, C, W	E	S	P, R	DAL,IRC2,MSI,OHM, SOA
D55342^07@10#5&	10,500	125 (char. E, H) or 250 (char. K, M)	E, H, K, M	B, C, W	E	S	P, R	DAL,IRC2,MSI,OHM, SOA
D55342^07@10#7&	10,700	125 (char. E, H) or 250 (char. K, M)	E, H, K, M	B, C, W	E	S	P, R	DAL,IRC2,MSI,OHM, SOA
D55342^07@11#0&	11,000	125 (char. E, H) or 250 (char. K, M)	E, H, K, M	B, C, W	E, H, K	S	P, R	DAL,IRC2,MSI,OHM, SOA
D55342^07@11#3&	11,300	125 (char. E, H) or 250 (char. K, M)	E, H, K, M	B, C, W	E	S	P, R	DAL,IRC2,MSI,OHM, SOA
D55342^07@11#5&	11,500	125 (char. E, H) or 250 (char. K, M)	E, H, K, M	B, C, W	E	S	P, R	DAL,IRC2,MSI,OHM, SOA
D55342^07@11#8&	11,800	125 (char. E, H) or 250 (char. K, M)	E, H, K, M	B, C, W	E	S	P, R	DAL,IRC2,MSI,OHM, SOA
D55342^07@12#0&	12,000	125 (char. E, H) or 250 (char. K, M)	E, H, K, M	B, C, W	H, K, N	S	P, R	DAL,IRC2,MSI,OHM, SOA
D55342^07@12#1&	12,100	125 (char. E, H) or 250 (char. K, M)	E, H, K, M	B, C, W	E	S	P, R	DAL,IRC2,MSI,OHM, SOA
D55342^07@12#4&	12,400	125 (char. E, H) or 250 (char. K, M)	E, H, K, M	B, C, W	E	S	P, R	DAL,IRC2,MSI,OHM, SOA
D55342^07@12#7&	12,700	125 (char. E, H) or 250 (char. K, M)	E, H, K, M	B, C, W	E	S	P, R	DAL,IRC2,MSI,OHM, SOA
D55342^07@13#0&	13,000	125 (char. E, H) or 250 (char. K, M)	E, H, K, M	B, C, W	E, H, K	S	P, R	DAL,IRC2,MSI,OHM, SOA
D55342^07@13#3&	13,300	125 (char. E, H) or 250 (char. K, M)	E, H, K, M	B, C, W	E	S	P, R	DAL,IRC2,MSI,OHM, SOA
D55342^07@13#7&	13,700	125 (char. E, H) or 250 (char. K, M)	E, H, K, M	B, C, W	E	S	P, R	DAL,IRC2,MSI,OHM, SOA
D55342^07@14#0&	14,000	125 (char. E, H) or 250 (char. K, M)	E, H, K, M	B, C, W	E	S	P, R	DAL,IRC2,MSI,OHM, SOA
D55342^07@14#3&	14,300	125 (char. E, H) or 250 (char. K, M)	E, H, K, M	B, C, W	E	S	P, R	DAL,IRC2,MSI,OHM, SOA
D55342^07@14#7&	14,700	125 (char. E, H) or 250 (char. K, M)	E, H, K, M	B, C, W	E	S	P, R	DAL,IRC2,MSI,OHM, SOA

D55342^07@15#0&	15,000	125 (char. E, H) or 250 (char. K, M)	E, H, K, M	B, C, W	E, H, K, N	S	P, R	DAL,IRC2,MSI,OHM, SOA
D55342^07@15#4&	15,400	125 (char. E, H) or 250 (char. K, M)	E, H, K, M	B, C, W	E	S	P, R	DAL,IRC2,MSI,OHM, SOA
D55342^07@15#8&	15,800	125 (char. E, H) or 250 (char. K, M)	E, H, K, M	B, C, W	E	S	P, R	DAL,IRC2,MSI,OHM, SOA
D55342^07@16#0&	16,000	125 (char. E, H) or 250 (char. K, M)	E, H, K, M	B, C, W	H, K	S	P, R	DAL,IRC2,MSI,OHM, SOA
D55342^07@16#2&	16,200	125 (char. E, H) or 250 (char. K, M)	E, H, K, M	B, C, W	E	S	P, R	DAL,IRC2,MSI,OHM, SOA
D55342^07@16#5&	16,500	125 (char. E, H) or 250 (char. K, M)	E, H, K, M	B, C, W	E	S	P, R	DAL,IRC2,MSI,OHM, SOA
D55342^07@16#9&	16,900	125 (char. E, H) or 250 (char. K, M)	E, H, K, M	B, C, W	E	S	P, R	DAL,IRC2,MSI,OHM, SOA
D55342^07@17#4&	17,400	125 (char. E, H) or 250 (char. K, M)	E, H, K, M	B, C, W	E	S	P, R	DAL,IRC2,MSI,OHM, SOA
D55342^07@17#8&	17,800	125 (char. E, H) or 250 (char. K, M)	E, H, K, M	B, C, W	E	S	P, R	DAL,IRC2,MSI,OHM, SOA
D55342^07@18#0&	18,000	125 (char. E, H) or 250 (char. K, M)	E, H, K, M	B, C, W	H, K, N	S	P, R	DAL,IRC2,MSI,OHM, SOA
D55342^07@18#2&	18,200	125 (char. E, H) or 250 (char. K, M)	E, H, K, M	B, C, W	E	S	P, R	DAL,IRC2,MSI,OHM, SOA
D55342^07@18#7&	18,700	125 (char. E, H) or 250 (char. K, M)	E, H, K, M	B, C, W	E	S	P, R	DAL,IRC2,MSI,OHM, SOA
D55342^07@19#1&	19,100	125 (char. E, H) or 250 (char. K, M)	E, H, K, M	B, C, W	E	S	P, R	DAL,IRC2,MSI,OHM, SOA
D55342^07@19#6&	19,600	125 (char. E, H) or 250 (char. K, M)	E, H, K, M	B, C, W	E	S	P, R	DAL,IRC2,MSI,OHM, SOA
D55342^07@20#0&	20,000	125 (char. E, H) or 250 (char. K, M)	E, H, K, M	B, C, W	E, H, K, N	S	P, R	DAL,IRC2,MSI,OHM, SOA
D55342^07@20#5&	20,500	125 (char. E, H) or 250 (char. K, M)	E, H, K, M	B, C, W	E	S	P, R	DAL,IRC2,MSI,OHM, SOA
D55342^07@21#0&	21,000	125 (char. E, H) or 250 (char. K, M)	E, H, K, M	B, C, W	E	S	P, R	DAL,IRC2,MSI,OHM, SOA
D55342^07@21#5&	21,500	125 (char. E, H) or 250 (char. K, M)	E, H, K, M	B, C, W	E	S	P, R	DAL,IRC2,MSI,OHM, SOA
D55342^07@22#0&	22,000	125 (char. E, H) or 250 (char. K, M)	E, H, K, M	B, C, W	H, K, N	S	P, R	DAL,IRC2,MSI,OHM, SOA
D55342^07@22#1&	22,100	125 (char. E, H) or 250 (char. K, M)	E, H, K, M	B, C, W	E	S	P, R	DAL,IRC2,MSI,OHM, SOA
D55342^07@22#6&	22,600	125 (char. E, H) or 250 (char. K, M)	E, H, K, M	B, C, W	E	S	P, R	DAL,IRC2,MSI,OHM, SOA
D55342^07@23#2&	23,200	125 (char. E, H) or 250 (char. K, M)	E, H, K, M	B, C, W	E	S	P, R	DAL,IRC2,MSI,OHM, SOA
D55342^07@23#7&	23,700	125 (char. E, H) or 250 (char. K, M)	E, H, K, M	B, C, W	E	S	P, R	DAL,IRC2,MSI,OHM, SOA
D55342^07@24#0&	24,000	125 (char. E, H) or 250 (char. K, M)	E, H, K, M	B, C, W	H, K	S	P, R	DAL,IRC2,MSI,OHM, SOA
D55342^07@24#3&	24,300	125 (char. E, H) or 250 (char. K, M)	E, H, K, M	B, C, W	E	S	P, R	DAL,IRC2,MSI,OHM, SOA
D55342^07@24#9&	24,900	125 (char. E, H) or 250 (char. K, M)	E, H, K, M	B, C, W	E	S	P, R	DAL,IRC2,MSI,OHM, SOA
D55342^07@25#5&	25,500	125 (char. E, H) or 250 (char. K, M)	E, H, K, M	B, C, W	E	S	P, R	DAL,IRC2,MSI,OHM, SOA
D55342^07@26#1&	26,100	125 (char. E, H) or 250 (char. K, M)	E, H, K, M	B, C, W	E	S	P, R	DAL,IRC2,MSI,OHM, SOA
D55342^07@26#7&	26,700	125 (char. E, H) or 250 (char. K, M)	E, H, K, M	B, C, W	E	S	P, R	DAL,IRC2,MSI,OHM, SOA
D55342^07@27#0&	27,000	125 (char. E, H) or 250 (char. K, M)	E, H, K, M	B, C, W	H, K, N	S	P, R	DAL,IRC2,MSI,OHM, SOA
D55342^07@27#4&	27,400	125 (char. E, H) or 250 (char. K, M)	E, H, K, M	B, C, W	E	S	P, R	DAL,IRC2,MSI,OHM, SOA
D55342^07@28#0&	28,000	125 (char. E, H) or 250 (char. K, M)	E, H, K, M	B, C, W	E	S	P, R	DAL,IRC2,MSI,OHM, SOA
D55342^07@28#7&	28,700	125 (char. E, H) or 250 (char. K, M)	E, H, K, M	B, C, W	E	S	P, R	DAL,IRC2,MSI,OHM, SOA
D55342^07@29#4&	29,400	125 (char. E, H) or 250 (char. K, M)	E, H, K, M	B, C, W	E	S	P, R	DAL,IRC2,MSI,OHM, SOA
D55342^07@30#0&	30,000	125 (char. E, H) or 250 (char. K, M)	E, H, K, M	B, C, W	H, K	S	P, R	DAL,IRC2,MSI,OHM, SOA
D55342^07@30#1&	30,100	125 (char. E, H) or 250 (char. K, M)	E, H, K, M	B, C, W	E	S	P, R	DAL,IRC2,MSI,OHM, SOA
D55342^07@30#9&	30,900	125 (char. E, H) or 250 (char. K, M)	E, H, K, M	B, C, W	E	S	P, R	DAL,IRC2,MSI,OHM, SOA
D55342^07@31#6&	31,600	125 (char. E, H) or 250 (char. K, M)	E, H, K, M	B, C, W	E	S	P, R	DAL,IRC2,MSI,OHM, SOA
D55342^07@32#4&	32,400	125 (char. E, H) or 250 (char. K, M)	E, H, K, M	B, C, W	E	S	P, R	DAL,IRC2,MSI,OHM, SOA
D55342^07@33#0&	33,000	125 (char. E, H) or 250 (char. K, M)	E, H, K, M	B, C, W	H, K, N	S	P, R	DAL,IRC2,MSI,OHM, SOA
D55342^07@33#2&	33,200	125 (char. E, H) or 250 (char. K, M)	E, H, K, M	B, C, W	E	S	P, R	DAL,IRC2,MSI,OHM, SOA
D55342^07@34#0&	34,000	125 (char. E, H) or 250 (char. K, M)	E, H, K, M	B, C, W	E	S	P, R	DAL,IRC2,MSI,OHM, SOA
D55342^07@34#8&	34,800	125 (char. E, H) or 250 (char. K, M)	E, H, K, M	B, C, W	E	S	P, R	DAL,IRC2,MSI,OHM, SOA
D55342^07@35#7&	35,700	125 (char. E, H) or 250 (char. K, M)	E, H, K, M	B, C, W	E	S	P, R	DAL,IRC2,MSI,OHM, SOA
D55342^07@36#0&	36,000	125 (char. E, H) or 250 (char. K, M)	E, H, K, M	B, C, W	H, K	S	P, R	DAL,IRC2,MSI,OHM, SOA
D55342^07@36#5&	36,500	125 (char. E, H) or 250 (char. K, M)	E, H, K, M	B, C, W	E	S	P, R	DAL,IRC2,MSI,OHM, SOA
D55342^07@37#4&	37,400	125 (char. E, H) or 250 (char. K, M)	E, H, K, M	B, C, W	E	S	P, R	DAL,IRC2,MSI,OHM, SOA

D55342^07@38#3&	38,300	125 (char. E, H) or 250 (char. K, M)	E, H, K, M	B, C, W	E	S	P, R	DAL,IRC2,MSI,OHM, SOA
D55342^07@39#0&	39,000	125 (char. E, H) or 250 (char. K, M)	E, H, K, M	B, C, W	H, K, N	S	P, R	DAL,IRC2,MSI,OHM, SOA
D55342^07@39#2&	39,200	125 (char. E, H) or 250 (char. K, M)	E, H, K, M	B, C, W	E	S	P, R	DAL,IRC2,MSI,OHM, SOA
D55342^07@40#2&	40,200	125 (char. E, H) or 250 (char. K, M)	E, H, K, M	B, C, W	E	S	P, R	DAL,IRC2,MSI,OHM, SOA
D55342^07@41#2&	41,200	125 (char. E, H) or 250 (char. K, M)	E, H, K, M	B, C, W	E	S	P, R	DAL,IRC2,MSI,OHM, SOA
D55342^07@42#2&	42,200	125 (char. E, H) or 250 (char. K, M)	E, H, K, M	B, C, W	E	S	P, R	DAL,IRC2,MSI,OHM, SOA
D55342^07@43#0&	43,000	125 (char. E, H) or 250 (char. K, M)	E, H, K, M	B, C, W	H, K	S	P, R	DAL,IRC2,MSI,OHM, SOA
D55342^07@43#2&	43,200	125 (char. E, H) or 250 (char. K, M)	E, H, K, M	B, C, W	E	S	P, R	DAL,IRC2,MSI,OHM, SOA
D55342^07@44#2&	44,200	125 (char. E, H) or 250 (char. K, M)	E, H, K, M	B, C, W	E	S	P, R	DAL,IRC2,MSI,OHM, SOA
D55342^07@45#3&	45,300	125 (char. E, H) or 250 (char. K, M)	E, H, K, M	B, C, W	E	S	P, R	DAL,IRC2,MSI,OHM, SOA
D55342^07@46#4&	46,400	125 (char. E, H) or 250 (char. K, M)	E, H, K, M	B, C, W	E	S	P, R	DAL,IRC2,MSI,OHM, SOA
D55342^07@47#0&	47,000	125 (char. E, H) or 250 (char. K, M)	E, H, K, M	B, C, W	H, K, N	S	P, R	DAL,IRC2,MSI,OHM, SOA
D55342^07@47#5&	47,500	125 (char. E, H) or 250 (char. K, M)	E, H, K, M	B, C, W	E	S	P, R	DAL,IRC2,MSI,OHM, SOA
D55342^07@48#7&	48,700	125 (char. E, H) or 250 (char. K, M)	E, H, K, M	B, C, W	E	S	P, R	DAL,IRC2,MSI,OHM, SOA
D55342^07@49#9&	49,900	125 (char. E, H) or 250 (char. K, M)	E, H, K, M	B, C, W	E	S	P, R	DAL,IRC2,MSI,OHM, SOA
D55342^07@51#0&	51,000	125 (char. E, H) or 250 (char. K, M)	E, H, K, M	B, C, W	H, K	S	P, R	DAL,IRC2,MSI,OHM, SOA
D55342^07@51#1&	51,100	125 (char. E, H) or 250 (char. K, M)	E, H, K, M	B, C, W	E	S	P, R	DAL,IRC2,MSI,OHM, SOA
D55342^07@52#3&	52,300	125 (char. E, H) or 250 (char. K, M)	E, H, K, M	B, C, W	E	S	P, R	DAL,IRC2,MSI,OHM, SOA
D55342^07@53#6&	53,600	125 (char. E, H) or 250 (char. K, M)	E, H, K, M	B, C, W	E	S	P, R	DAL,IRC2,MSI,OHM, SOA
D55342^07@54#9&	54,900	125 (char. E, H) or 250 (char. K, M)	E, H, K, M	B, C, W	E	S	P, R	DAL,IRC2,MSI,OHM, SOA
D55342^07@56#0&	56,000	125 (char. E, H) or 250 (char. K, M)	E, H, K, M	B, C, W	H, K, N	S	P, R	DAL,IRC2,MSI,OHM, SOA
D55342^07@56#2&	56,200	125 (char. E, H) or 250 (char. K, M)	E, H, K, M	B, C, W	E	S	P, R	DAL,IRC2,MSI,OHM, SOA
D55342^07@57#6&	57,600	125 (char. E, H) or 250 (char. K, M)	E, H, K, M	B, C, W	E	S	P, R	DAL,IRC2,MSI,OHM, SOA
D55342^07@59#0&	59,000	125 (char. E, H) or 250 (char. K, M)	E, H, K, M	B, C, W	E	S	P, R	DAL,IRC2,MSI,OHM, SOA
D55342^07@60#4&	60,400	125 (char. E, H) or 250 (char. K, M)	E, H, K, M	B, C, W	E	S	P, R	DAL,IRC2,MSI,OHM, SOA
D55342^07@61#9&	61,900	125 (char. E, H) or 250 (char. K, M)	E, H, K, M	B, C, W	E	S	P, R	DAL,IRC2,MSI,OHM, SOA
D55342^07@62#0&	62,000	125 (char. E, H) or 250 (char. K, M)	E, H, K, M	B, C, W	H, K	S	P, R	DAL,IRC2,MSI,OHM, SOA
D55342^07@63#4&	63,400	125 (char. E, H) or 250 (char. K, M)	E, H, K, M	B, C, W	E	S	P, R	DAL,IRC2,MSI,OHM, SOA
D55342^07@64#9&	64,900	125 (char. E, H) or 250 (char. K, M)	E, H, K, M	B, C, W	E	S	P, R	DAL,IRC2,MSI,OHM, SOA
D55342^07@66#5&	66,500	125 (char. E, H) or 250 (char. K, M)	E, H, K, M	B, C, W	E	S	P, R	DAL,IRC2,MSI,OHM, SOA
D55342^07@68#0&	68,000	125 (char. E, H) or 250 (char. K, M)	E, H, K, M	B, C, W	H, K, N	S	P, R	DAL,IRC2,MSI,OHM, SOA
D55342^07@68#1&	68,100	125 (char. E, H) or 250 (char. K, M)	E, H, K, M	B, C, W	E	S	P, R	DAL,IRC2,MSI,OHM, SOA
D55342^07@69#8&	69,800	125 (char. E, H) or 250 (char. K, M)	E, H, K, M	B, C, W	E	S	P, R	DAL,IRC2,MSI,OHM, SOA
D55342^07@71#5&	71,500	125 (char. E, H) or 250 (char. K, M)	E, H, K, M	B, C, W	E	S	P, R	DAL,IRC2,MSI,OHM, SOA
D55342^07@73#2&	73,200	125 (char. E, H) or 250 (char. K, M)	E, H, K, M	B, C, W	E	S	P, R	DAL,IRC2,MSI,OHM, SOA
D55342^07@75#0&	75,000	125 (char. E, H) or 250 (char. K, M)	E, H, K, M	B, C, W	E, H, K	S	P, R	DAL,IRC2,MSI,OHM, SOA
D55342^07@76#8&	76,800	125 (char. E, H) or 250 (char. K, M)	E, H, K, M	B, C, W	E	S	P, R	DAL,IRC2,MSI,OHM, SOA
D55342^07@78#7&	78,700	125 (char. E, H) or 250 (char. K, M)	E, H, K, M	B, C, W	E	S	P, R	DAL,IRC2,MSI,OHM, SOA
D55342^07@80#6&	80,600	125 (char. E, H) or 250 (char. K, M)	E, H, K, M	B, C, W	E	S	P, R	DAL,IRC2,MSI,OHM, SOA
D55342^07@82#0&	82,000	125 (char. E, H) or 250 (char. K, M)	E, H, K, M	B, C, W	H, K, N	S	P, R	DAL,IRC2,MSI,OHM, SOA
D55342^07@82#5&	82,500	125 (char. E, H) or 250 (char. K, M)	E, H, K, M	B, C, W	E	S	P, R	DAL,IRC2,MSI,OHM, SOA
D55342^07@84#5&	84,500	125 (char. E, H) or 250 (char. K, M)	E, H, K, M	B, C, W	E	S	P, R	DAL,IRC2,MSI,OHM, SOA
D55342^07@86#6&	86,600	125 (char. E, H) or 250 (char. K, M)	E, H, K, M	B, C, W	E	S	P, R	DAL,IRC2,MSI,OHM, SOA
D55342^07@88#7&	88,700	125 (char. E, H) or 250 (char. K, M)	E, H, K, M	B, C, W	E	S	P, R	DAL,IRC2,MSI,OHM, SOA
D55342^07@90#9&	90,900	125 (char. E, H) or 250 (char. K, M)	E, H, K, M	B, C, W	E	S	P, R	DAL,IRC2,MSI,OHM, SOA
D55342^07@91#0&	91,000	125 (char. E, H) or 250 (char. K, M)	E, H, K, M	B, C, W	H, K	S	P, R	DAL,IRC2,MSI,OHM, SOA
D55342^07@93#1&	93,100	125 (char. E, H) or 250 (char. K, M)	E, H, K, M	B, C, W	E	S	P, R	DAL,IRC2,MSI,OHM, SOA

D55342^07@95#3&	95,300	125 (char. E, H) or 250 (char. K, M)	E, H, K, M	B, C, W	E	S	P, R	DAL,IRC2,MSI,OHM, SOA
D55342^07@97#6&	97,600	125 (char. E, H) or 250 (char. K, M)	E, H, K, M	B, C, W	E	S	P, R	DAL,IRC2,MSI,OHM, SOA
D55342^07@10#0&	100,000	125 (char. E, H) or 250 (char. K, M)	E, H, K, M	B, C, W	E, H, K, N	S	P, R	DAL,IRC2,MSI,OHM, SOA
D55342^07@10#2&	102,000	125 (char. E, H) or 250 (char. K, M)	E, H, K, M	B, C, W	E	S	P, R	DAL,IRC2,MSI,OHM, SOA
D55342^07@10#5&	105,000	125 (char. E, H) or 250 (char. K, M)	E, H, K, M	B, C, W	E	S	P, R	DAL,IRC2,MSI,OHM, SOA
D55342^07@10#7&	107,000	125 (char. E, H) or 250 (char. K, M)	E, H, K, M	B, C, W	E	S	P, R	DAL,IRC2,MSI,OHM, SOA
D55342^07@11#0&	110,000	125 (char. E, H) or 250 (char. K, M)	E, H, K, M	B, C, W	E, H, K	S	P, R	DAL,IRC2,MSI,OHM, SOA
D55342^07@11#3&	113,000	125 (char. E, H) or 250 (char. K, M)	E, H, K, M	B, C, W	E	S	P, R	DAL,IRC2,MSI,OHM, SOA
D55342^07@11#5&	115,000	125 (char. E, H) or 250 (char. K, M)	E, H, K, M	B, C, W	E	S	P, R	DAL,IRC2,MSI,OHM, SOA
D55342^07@11#8&	118,000	125 (char. E, H) or 250 (char. K, M)	E, H, K, M	B, C, W	E	S	P, R	DAL,IRC2,MSI,OHM, SOA
D55342^07@12#0&	120,000	125 (char. E, H) or 250 (char. K, M)	E, H, K, M	B, C, W	H, K, N	S	P, R	DAL,IRC2,MSI,OHM, SOA
D55342^07@12#1&	121,000	125 (char. E, H) or 250 (char. K, M)	E, H, K, M	B, C, W	E	S	P, R	DAL,IRC2,MSI,OHM, SOA
D55342^07@12#4&	124,000	125 (char. E, H) or 250 (char. K, M)	E, H, K, M	B, C, W	E	S	P, R	DAL,IRC2,MSI,OHM, SOA
D55342^07@12#7&	127,000	125 (char. E, H) or 250 (char. K, M)	E, H, K, M	B, C, W	E	S	P, R	DAL,MSI,OHM,SOA
D55342^07@13#0&	130,000	125 (char. E, H) or 250 (char. K, M)	E, H, K, M	B, C, W	E, H, K	S	P, R	DAL,MSI,OHM,SOA
D55342^07@13#3&	133,000	125 (char. E, H) or 250 (char. K, M)	E, H, K, M	B, C, W	E	S	P, R	DAL,MSI,OHM,SOA
D55342^07@13#7&	137,000	125 (char. E, H) or 250 (char. K, M)	E, H, K, M	B, C, W	E	S	P, R	DAL,MSI,OHM,SOA
D55342^07@14#0&	140,000	125 (char. E, H) or 250 (char. K, M)	E, H, K, M	B, C, W	E	S	P, R	DAL,MSI,OHM,SOA
D55342^07@14#3&	143,000	125 (char. E, H) or 250 (char. K, M)	E, H, K, M	B, C, W	E	S	P, R	DAL,MSI,OHM,SOA
D55342^07@14#7&	147,000	125 (char. E, H) or 250 (char. K, M)	E, H, K, M	B, C, W	E	S	P, R	DAL,MSI,OHM,SOA
D55342^07@15#0&	150,000	125 (char. E, H) or 250 (char. K, M)	E, H, K, M	B, C, W	E, H, K, N	S	P, R	DAL,MSI,OHM,SOA
D55342^07@15#4&	154,000	125 (char. E, H) or 250 (char. K, M)	E, H, K, M	B, C, W	E	S	P, R	DAL,MSI,OHM,SOA
D55342^07@15#8&	158,000	125 (char. E, H) or 250 (char. K, M)	E, H, K, M	B, C, W	E	S	P, R	DAL,MSI,OHM,SOA
D55342^07@16#0&	160,000	125 (char. E, H) or 250 (char. K, M)	E, H, K, M	B, C, W	H, K	S	P, R	DAL,MSI,OHM,SOA
D55342^07@16#2&	162,000	125 (char. E, H) or 250 (char. K, M)	E, H, K, M	B, C, W	E	S	P, R	DAL,MSI,OHM,SOA
D55342^07@16#5&	165,000	125 (char. E, H) or 250 (char. K, M)	E, H, K, M	B, C, W	E	S	P, R	DAL,MSI,OHM,SOA
D55342^07@16#9&	169,000	125 (char. E, H) or 250 (char. K, M)	E, H, K, M	B, C, W	E	S	P, R	DAL,MSI,OHM,SOA
D55342^07@17#4&	174,000	125 (char. E, H) or 250 (char. K, M)	E, H, K, M	B, C, W	E	S	P, R	DAL,MSI,OHM,SOA
D55342^07@17#8&	178,000	125 (char. E, H) or 250 (char. K, M)	E, H, K, M	B, C, W	E	S	P, R	DAL,MSI,OHM,SOA
D55342^07@18#0&	180,000	125 (char. E, H) or 250 (char. K, M)	E, H, K, M	B, C, W	H, K, N	S	P, R	DAL,MSI,OHM,SOA
D55342^07@18#2&	182,000	125 (char. E, H) or 250 (char. K, M)	E, H, K, M	B, C, W	E	S	P, R	DAL,MSI,OHM,SOA
D55342^07@18#7&	187,000	125 (char. E, H) or 250 (char. K, M)	E, H, K, M	B, C, W	E	S	P, R	DAL,MSI,OHM,SOA
D55342^07@19#1&	191,000	125 (char. E, H) or 250 (char. K, M)	E, H, K, M	B, C, W	E	S	P, R	DAL,MSI,OHM,SOA
D55342^07@19#6&	196,000	125 (char. E, H) or 250 (char. K, M)	E, H, K, M	B, C, W	E	S	P, R	DAL,MSI,OHM,SOA
D55342^07@20#0&	200,000	125 (char. E, H) or 250 (char. K, M)	E, H, K, M	B, C, W	E, H, K, N	S	P, R	DAL,MSI,OHM,SOA
D55342^07@20#5&	205,000	125 (char. E, H) or 250 (char. K, M)	E, H, K, M	B, C, W	E	S	P, R	DAL,MSI,OHM,SOA
D55342^07@21#0&	210,000	125 (char. E, H) or 250 (char. K, M)	E, H, K, M	B, C, W	E	S	P, R	DAL,MSI,OHM,SOA
D55342^07@21#5&	215,000	125 (char. E, H) or 250 (char. K, M)	E, H, K, M	B, C, W	E	S	P, R	DAL,MSI,OHM,SOA
D55342^07@22#0&	220,000	125 (char. E, H) or 250 (char. K, M)	E, H, K, M	B, C, W	H, K, N	S	P, R	DAL,MSI,OHM,SOA
D55342^07@22#1&	221,000	125 (char. E, H) or 250 (char. K, M)	E, H, K, M	B, C, W	E	S	P, R	DAL,MSI,OHM,SOA
D55342^07@22#6&	226,000	125 (char. E, H) or 250 (char. K, M)	E, H, K, M	B, C, W	E	S	P, R	DAL,MSI,OHM,SOA
D55342^07@23#2&	232,000	125 (char. E, H) or 250 (char. K, M)	E, H, K, M	B, C, W	E	S	P, R	DAL,MSI,OHM,SOA
D55342^07@23#7&	237,000	125 (char. E, H) or 250 (char. K, M)	E, H, K, M	B, C, W	E	S	P, R	DAL,MSI,OHM,SOA
D55342^07@24#0&	240,000	125 (char. E, H) or 250 (char. K, M)	E, H, K, M	B, C, W	H, K	S	P, R	DAL,MSI,OHM,SOA
D55342^07@24#3&	243,000	125 (char. E, H) or 250 (char. K, M)	E, H, K, M	B, C, W	E	S	P, R	DAL,MSI,OHM,SOA
D55342^07@24#9&	249,000	125 (char. E, H) or 250 (char. K, M)	E, H, K, M	B, C, W	E	S	P, R	DAL,MSI,OHM,SOA
D55342^07@25#5&	255,000	125 (char. E, H) or 250 (char. K, M)	E, H, K, M	B, C, W	E	S	P, R	DAL,MSI,OHM,SOA

D55342^07@26#1&	261,000	125 (char. E, H) or 250 (char. K, M)	E, H, K, M	B, C, W	E	S	P, R	DAL,MSI,OHM,SOA
D55342^07@26#7&	267,000	125 (char. E, H) or 250 (char. K, M)	E, H, K, M	B, C, W	E	S	P, R	DAL,MSI,OHM,SOA
D55342^07@27#0&	270,000	125 (char. E, H) or 250 (char. K, M)	E, H, K, M	B, C, W	H, K, N	S	P, R	DAL,MSI,OHM,SOA
D55342^07@27#4&	274,000	125 (char. E, H) or 250 (char. K, M)	E, H, K, M	B, C, W	E	S	P, R	DAL,MSI,OHM,SOA
D55342^07@28#0&	280,000	125 (char. E, H) or 250 (char. K, M)	E, H, K, M	B, C, W	E	S	P, R	DAL,MSI,OHM,SOA
D55342^07@28#7&	287,000	125 (char. E, H) or 250 (char. K, M)	E, H, K, M	B, C, W	E	S	P, R	DAL,MSI,OHM,SOA
D55342^07@29#4&	294,000	125 (char. E, H) or 250 (char. K, M)	E, H, K, M	B, C, W	E	S	P, R	DAL,MSI,OHM,SOA
D55342^07@30#0&	300,000	125 (char. E, H) or 250 (char. K, M)	E, H, K, M	B, C, W	H, K	S	P, R	DAL,MSI,OHM,SOA
D55342^07@30#1&	301,000	125 (char. E, H) or 250 (char. K, M)	E, H, K, M	B, C, W	E	S	P, R	DAL,MSI,OHM,SOA
D55342^07@30#9&	309,000	125 (char. E, H) or 250 (char. K, M)	E, H, K, M	B, C, W	E	S	P, R	DAL,MSI,OHM,SOA
D55342^07@31#6&	316,000	125 (char. E, H) or 250 (char. K, M)	E, H, K, M	B, C, W	E	S	P, R	DAL,MSI,OHM,SOA
D55342^07@32#4&	324,000	125 (char. E, H) or 250 (char. K, M)	E, H, K, M	B, C, W	E	S	P, R	DAL,MSI,OHM,SOA
D55342^07@33#0&	330,000	125 (char. E, H) or 250 (char. K, M)	E, H, K, M	B, C, W	H, K, N	S	P, R	DAL,MSI,OHM,SOA
D55342^07@33#2&	332,000	125 (char. E, H) or 250 (char. K, M)	E, H, K, M	B, C, W	E	S	P, R	DAL,MSI,OHM,SOA
D55342^07@34#0&	340,000	125 (char. E, H) or 250 (char. K, M)	E, H, K, M	B, C, W	E	S	P, R	DAL,MSI,OHM,SOA
D55342^07@34#8&	348,000	125 (char. E, H) or 250 (char. K, M)	E, H, K, M	B, C, W	E	S	P, R	DAL,MSI,OHM,SOA
D55342^07@35#7&	357,000	125 (char. E, H) or 250 (char. K, M)	E, H, K, M	B, C, W	E	S	P, R	DAL,MSI,OHM,SOA
D55342^07@36#0&	360,000	125 (char. E, H) or 250 (char. K, M)	E, H, K, M	B, C, W	H, K	S	P, R	DAL,MSI,OHM,SOA
D55342^07@36#5&	365,000	125 (char. E, H) or 250 (char. K, M)	E, H, K, M	B, C, W	E	S	P, R	DAL,MSI,OHM,SOA
D55342^07@37#4&	374,000	125 (char. E, H) or 250 (char. K, M)	E, H, K, M	B, C, W	E	S	P, R	DAL,MSI,OHM,SOA
D55342^07@38#3&	383,000	125 (char. E, H) or 250 (char. K, M)	E, H, K, M	B, C, W	E	S	P, R	DAL,MSI,OHM,SOA
D55342^07@39#0&	390,000	125 (char. E, H) or 250 (char. K, M)	E, H, K, M	B, C, W	H, K, N	S	P, R	DAL,MSI,OHM,SOA
D55342^07@39#2&	392,000	125 (char. E, H) or 250 (char. K, M)	E, H, K, M	B, C, W	E	S	P, R	DAL,MSI,OHM,SOA
D55342^07@40#2&	402,000	125 (char. E, H) or 250 (char. K, M)	E, H, K, M	B, C, W	E	S	P, R	DAL,MSI,OHM,SOA
D55342^07@41#2&	412,000	125 (char. E, H) or 250 (char. K, M)	E, H, K, M	B, C, W	E	S	P, R	DAL,MSI,OHM,SOA
D55342^07@42#2&	422,000	125 (char. E, H) or 250 (char. K, M)	E, H, K, M	B, C, W	E	S	P, R	DAL,MSI,OHM,SOA
D55342^07@43#0&	430,000	125 (char. E, H) or 250 (char. K, M)	E, H, K, M	B, C, W	H, K	S	P, R	DAL,MSI,OHM,SOA
D55342^07@43#2&	432,000	125 (char. E, H) or 250 (char. K, M)	E, H, K, M	B, C, W	E	S	P, R	DAL,MSI,OHM,SOA
D55342^07@44#2&	442,000	125 (char. E, H) or 250 (char. K, M)	E, H, K, M	B, C, W	E	S	P, R	DAL,MSI,OHM,SOA
D55342^07@45#3&	453,000	125 (char. E, H) or 250 (char. K, M)	E, H, K, M	B, C, W	E	S	P, R	DAL,MSI,OHM,SOA
D55342^07@46#4&	464,000	125 (char. E, H) or 250 (char. K, M)	E, H, K, M	B, C, W	E	S	P, R	DAL,MSI,OHM,SOA
D55342^07@47#0&	470,000	125 (char. E, H) or 250 (char. K, M)	E, H, K, M	B, C, W	H, K, N	S	P, R	DAL,MSI,OHM,SOA
D55342^07@47#5&	475,000	125 (char. E, H) or 250 (char. K, M)	E, H, K, M	B, C, W	E	S	P, R	DAL,MSI,OHM,SOA
D55342^07@48#7&	487,000	125 (char. E, H) or 250 (char. K, M)	E, H, K, M	B, C, W	E	S	P, R	DAL,MSI,OHM,SOA
D55342^07@49#9&	499,000	125 (char. E, H) or 250 (char. K, M)	E, H, K, M	B, C, W	E	S	P, R	DAL,MSI,OHM,SOA
D55342^07@51#0&	510,000	125 (char. E, H) or 250 (char. K, M)	E, H, K, M	B, C, W	H, K	S	P, R	DAL,MSI,OHM,SOA
D55342^07@51#1&	511,000	125 (char. E, H) or 250 (char. K, M)	E, H, K, M	B, C, W	E	S	P, R	DAL,MSI,OHM,SOA
D55342^07@52#3&	523,000	125 (char. E, H) or 250 (char. K, M)	E, H, K, M	B, C, W	E	S	P, R	DAL,MSI,OHM,SOA
D55342^07@53#6&	536,000	125 (char. E, H) or 250 (char. K, M)	E, H, K, M	B, C, W	E	S	P, R	DAL,MSI,OHM,SOA
D55342^07@54#9&	549,000	125 (char. E, H) or 250 (char. K, M)	E, H, K, M	B, C, W	E	S	P, R	DAL,MSI,OHM,SOA
D55342^07@56#0&	560,000	125 (char. E, H) or 250 (char. K, M)	E, H, K, M	B, C, W	H, K, N	S	P, R	DAL,MSI,OHM,SOA
D55342^07@56#2&	562,000	125 (char. E, H) or 250 (char. K, M)	E, H, K, M	B, C, W	E	S	P, R	DAL,MSI,OHM,SOA
D55342^07@57#6&	576,000	125 (char. E, H) or 250 (char. K, M)	E, H, K, M	B, C, W	E	S	P, R	DAL,MSI,OHM,SOA
D55342^07@59#0&	590,000	125 (char. E, H) or 250 (char. K, M)	E, H, K, M	B, C, W	E	S	P, R	DAL,MSI,OHM,SOA
D55342^07@60#4&	604,000	125 (char. E, H) or 250 (char. K, M)	E, H, K, M	B, C, W	E	S	P, R	DAL,MSI,OHM,SOA
D55342^07@61#9&	619,000	125 (char. E, H) or 250 (char. K, M)	E, H, K, M	B, C, W	E	S	P, R	DAL,MSI,OHM,SOA
D55342^07@62#0&	620,000	125 (char. E, H) or 250 (char. K, M)	E, H, K, M	B, C, W	H, K	S	P, R	DAL,MSI,OHM,SOA

D55342^07@63#4&	634,000	125 (char. E, H) or 250 (char. K, M)	E, H, K, M	B, C, W	E	S	P, R	DAL,MSI,OHM,SOA
D55342^07@64#9&	649,000	125 (char. E, H) or 250 (char. K, M)	E, H, K, M	B, C, W	E	S	P, R	DAL,MSI,OHM,SOA
D55342^07@66#5&	665,000	125 (char. E, H) or 250 (char. K, M)	E, H, K, M	B, C, W	E	S	P, R	DAL,MSI,OHM,SOA
D55342^07@68#0&	680,000	125 (char. E, H) or 250 (char. K, M)	E, H, K, M	B, C, W	H, K, N	S	P, R	DAL,MSI,OHM,SOA
D55342^07@68#1&	681,000	125 (char. E, H) or 250 (char. K, M)	E, H, K, M	B, C, W	E	S	P, R	DAL,MSI,OHM,SOA
D55342^07@69#8&	698,000	125 (char. E, H) or 250 (char. K, M)	E, H, K, M	B, C, W	E	S	P, R	DAL,MSI,OHM,SOA
D55342^07@71#5&	715,000	125 (char. E, H) or 250 (char. K, M)	E, H, K, M	B, C, W	E	S	P, R	DAL,MSI,OHM,SOA
D55342^07@73#2&	732,000	125 (char. E, H) or 250 (char. K, M)	E, H, K, M	B, C, W	E	S	P, R	DAL,MSI,OHM,SOA
D55342^07@75#0&	750,000	125 (char. E, H) or 250 (char. K, M)	E, H, K, M	B, C, W	E, H, K	S	P, R	DAL,MSI,OHM,SOA
D55342^07@76#8&	768,000	125 (char. E, H) or 250 (char. K, M)	E, H, K, M	B, C, W	E	S	P, R	DAL,MSI,OHM,SOA
D55342^07@78#7&	787,000	125 (char. E, H) or 250 (char. K, M)	E, H, K, M	B, C, W	E	S	P, R	DAL,MSI,OHM,SOA
D55342^07@80#6&	806,000	125 (char. E, H) or 250 (char. K, M)	E, H, K, M	B, C, W	E	S	P, R	DAL,MSI,OHM,SOA
D55342^07@82#0&	820,000	125 (char. E, H) or 250 (char. K, M)	E, H, K, M	B, C, W	H, K, N	S	P, R	DAL,MSI,OHM,SOA
D55342^07@82#5&	825,000	125 (char. E, H) or 250 (char. K, M)	E, H, K, M	B, C, W	E	S	P, R	DAL,MSI,OHM,SOA
D55342^07@84#5&	845,000	125 (char. E, H) or 250 (char. K, M)	E, H, K, M	B, C, W	E	S	P, R	DAL,MSI,OHM,SOA
D55342^07@86#6&	866,000	125 (char. E, H) or 250 (char. K, M)	E, H, K, M	B, C, W	E	S	P, R	DAL,MSI,OHM,SOA
D55342^07@88#7&	887,000	125 (char. E, H) or 250 (char. K, M)	E, H, K, M	B, C, W	E	S	P, R	DAL,MSI,OHM,SOA
D55342^07@90#9&	909,000	125 (char. E, H) or 250 (char. K, M)	E, H, K, M	B, C, W	E	S	P, R	DAL,MSI,OHM,SOA
D55342^07@91#0&	910,000	125 (char. E, H) or 250 (char. K, M)	E, H, K, M	B, C, W	H, K	S	P, R	DAL,MSI,OHM,SOA
D55342^07@93#1&	931,000	125 (char. E, H) or 250 (char. K, M)	E, H, K, M	B, C, W	E	S	P, R	DAL,MSI,OHM,SOA
D55342^07@95#3&	953,000	125 (char. E, H) or 250 (char. K, M)	E, H, K, M	B, C, W	E	S	P, R	DAL,MSI,OHM,SOA
D55342^07@97#6&	976,000	125 (char. E, H) or 250 (char. K, M)	E, H, K, M	B, C, W	E	S	P, R	DAL,MSI,OHM,SOA
D55342^07@1#00&	1,000,000	125 (char. E, H) or 250 (char. K, M)	E, H, K, M	B, C, W	E, T, L, P	S	P, R	DAL,MSI,OHM,SOA
D55342^07@1#02&	1,020,000	125 (char. E, H) or 250 (char. K, M)	E, H, K, M	B, C, W	F	S	P, R	DAL,MSI,SOA
D55342^07@1#05&	1,050,000	125 (char. E, H) or 250 (char. K, M)	E, H, K, M	B, C, W	F	S	P, R	DAL,MSI,SOA
D55342^07@1#07&	1,070,000	125 (char. E, H) or 250 (char. K, M)	E, H, K, M	B, C, W	F	S	P, R	DAL,MSI,SOA
D55342^07@1#10&	1,100,000	125 (char. E, H) or 250 (char. K, M)	E, H, K, M	B, C, W	F, T, L	S	P, R	DAL,MSI,SOA
D55342^07@1#13&	1,130,000	125 (char. E, H) or 250 (char. K, M)	E, H, K, M	B, C, W	F	S	P, R	DAL,MSI,SOA
D55342^07@1#15&	1,150,000	125 (char. E, H) or 250 (char. K, M)	E, H, K, M	B, C, W	F	S	P, R	DAL,MSI,SOA
D55342^07@1#18&	1,180,000	125 (char. E, H) or 250 (char. K, M)	E, H, K, M	B, C, W	F	S	P, R	DAL,MSI,SOA
D55342^07@1#20&	1,200,000	125 (char. E, H) or 250 (char. K, M)	E, H, K, M	B, C, W	T, L, P	S	P, R	DAL,MSI,SOA
D55342^07@1#21&	1,210,000	125 (char. E, H) or 250 (char. K, M)	E, H, K, M	B, C, W	F	S	P, R	DAL,MSI,SOA
D55342^07@1#24&	1,240,000	125 (char. E, H) or 250 (char. K, M)	E, H, K, M	B, C, W	F	S	P, R	DAL,MSI,SOA
D55342^07@1#27&	1,270,000	125 (char. E, H) or 250 (char. K, M)	E, H, K, M	B, C, W	F	S	P, R	DAL,MSI,SOA
D55342^07@1#30&	1,300,000	125 (char. E, H) or 250 (char. K, M)	E, H, K, M	B, C, W	F, T, L	S	P, R	DAL,MSI,SOA
D55342^07@1#33&	1,330,000	125 (char. E, H) or 250 (char. K, M)	E, H, K, M	B, C, W	F	S	P, R	DAL,MSI,SOA
D55342^07@1#37&	1,370,000	125 (char. E, H) or 250 (char. K, M)	E, H, K, M	B, C, W	F	S	P, R	DAL,MSI,SOA
D55342^07@1#40&	1,400,000	125 (char. E, H) or 250 (char. K, M)	E, H, K, M	B, C, W	F	S	P, R	DAL,MSI,SOA
D55342^07@1#43&	1,430,000	125 (char. E, H) or 250 (char. K, M)	E, H, K, M	B, C, W	F	S	P, R	DAL,MSI,SOA
D55342^07@1#47&	1,470,000	125 (char. E, H) or 250 (char. K, M)	E, H, K, M	B, C, W	F	S	P, R	DAL,MSI,SOA
D55342^07@1#50&	1,500,000	125 (char. E, H) or 250 (char. K, M)	E, H, K, M	B, C, W	F, T, L, P	S	P, R	DAL,MSI,SOA
D55342^07@1#54&	1,540,000	125 (char. E, H) or 250 (char. K, M)	E, H, K, M	B, C, W	F	S	P, R	DAL,MSI,SOA
D55342^07@1#58&	1,580,000	125 (char. E, H) or 250 (char. K, M)	E, H, K, M	B, C, W	F	S	P, R	DAL,MSI,SOA
D55342^07@1#60&	1,600,000	125 (char. E, H) or 250 (char. K, M)	E, H, K, M	B, C, W	T, L	S	P, R	DAL,MSI,SOA
D55342^07@1#62&	1,620,000	125 (char. E, H) or 250 (char. K, M)	E, H, K, M	B, C, W	F	S	P, R	DAL,MSI,SOA
D55342^07@1#65&	1,650,000	125 (char. E, H) or 250 (char. K, M)	E, H, K, M	B, C, W	F	S	P, R	DAL,MSI,SOA
D55342^07@1#69&	1,690,000	125 (char. E, H) or 250 (char. K, M)	E, H, K, M	B, C, W	F	S	P, R	DAL,MSI,SOA

D55342^07@1#74&	1,740,000	125 (char. E, H) or 250 (char. K, M)	E, H, K, M	B, C, W	F	S	P, R	DAL,MSI,SOA
D55342^07@1#78&	1,780,000	125 (char. E, H) or 250 (char. K, M)	E, H, K, M	B, C, W	F	S	P, R	DAL,MSI,SOA
D55342^07@1#80&	1,800,000	125 (char. E, H) or 250 (char. K, M)	E, H, K, M	B, C, W	T, L, P	S	P, R	DAL,MSI,SOA
D55342^07@1#82&	1,820,000	125 (char. E, H) or 250 (char. K, M)	E, H, K, M	B, C, W	F	S	P, R	DAL,MSI,SOA
D55342^07@1#87&	1,870,000	125 (char. E, H) or 250 (char. K, M)	E, H, K, M	B, C, W	F	S	P, R	DAL,MSI,SOA
D55342^07@1#91&	1,910,000	125 (char. E, H) or 250 (char. K, M)	E, H, K, M	B, C, W	F	S	P, R	DAL,MSI,SOA
D55342^07@1#96&	1,960,000	125 (char. E, H) or 250 (char. K, M)	E, H, K, M	B, C, W	F	S	P, R	DAL,MSI,SOA
D55342^07@2#00&	2,000,000	125 (char. E, H) or 250 (char. K, M)	E, H, K, M	B, C, W	F, T, L, P	S	P, R	DAL,MSI,SOA
D55342^07@2#05&	2,050,000	125 (char. E, H) or 250 (char. K, M)	E, H, K, M	B, C, W	F	S	P, R	DAL,MSI,SOA
D55342^07@2#10&	2,100,000	125 (char. E, H) or 250 (char. K, M)	E, H, K, M	B, C, W	F	S	P, R	DAL,MSI,SOA
D55342^07@2#15&	2,150,000	125 (char. E, H) or 250 (char. K, M)	E, H, K, M	B, C, W	F	S	P, R	DAL,MSI,SOA
D55342^07@2#20&	2,200,000	125 (char. E, H) or 250 (char. K, M)	E, H, K, M	B, C, W	T, L, P	S	P, R	DAL,MSI,SOA
D55342^07@2#21&	2,210,000	125 (char. E, H) or 250 (char. K, M)	E, H, K, M	B, C, W	F	S	P, R	DAL,MSI,SOA
D55342^07@2#26&	2,260,000	125 (char. E, H) or 250 (char. K, M)	E, H, K, M	B, C, W	F	S	P, R	DAL,MSI,SOA
D55342^07@2#32&	2,320,000	125 (char. E, H) or 250 (char. K, M)	E, H, K, M	B, C, W	F	S	P, R	DAL,MSI,SOA
D55342^07@2#37&	2,370,000	125 (char. E, H) or 250 (char. K, M)	E, H, K, M	B, C, W	F	S	P, R	DAL,MSI,SOA
D55342^07@2#40&	2,400,000	125 (char. E, H) or 250 (char. K, M)	E, H, K, M	B, C, W	T, L	S	P, R	DAL,MSI,SOA
D55342^07@2#43&	2,430,000	125 (char. E, H) or 250 (char. K, M)	E, H, K, M	B, C, W	F	S	P, R	DAL,MSI,SOA
D55342^07@2#49&	2,490,000	125 (char. E, H) or 250 (char. K, M)	E, H, K, M	B, C, W	F	S	P, R	DAL,MSI,SOA
D55342^07@2#55&	2,550,000	125 (char. E, H) or 250 (char. K, M)	E, H, K, M	B, C, W	F	S	P, R	DAL,MSI,SOA
D55342^07@2#61&	2,610,000	125 (char. E, H) or 250 (char. K, M)	E, H, K, M	B, C, W	F	S	P, R	DAL,MSI,SOA
D55342^07@2#67&	2,670,000	125 (char. E, H) or 250 (char. K, M)	E, H, K, M	B, C, W	F	S	P, R	DAL,MSI,SOA
D55342^07@2#70&	2,700,000	125 (char. E, H) or 250 (char. K, M)	E, H, K, M	B, C, W	T, L, P	S	P, R	DAL,MSI,SOA
D55342^07@2#74&	2,740,000	125 (char. E, H) or 250 (char. K, M)	E, H, K, M	B, C, W	F	S	P, R	DAL,MSI,SOA
D55342^07@2#80&	2,800,000	125 (char. E, H) or 250 (char. K, M)	E, H, K, M	B, C, W	F	S	P, R	DAL,MSI,SOA
D55342^07@2#87&	2,870,000	125 (char. E, H) or 250 (char. K, M)	E, H, K, M	B, C, W	F	S	P, R	DAL,MSI,SOA
D55342^07@2#94&	2,940,000	125 (char. E, H) or 250 (char. K, M)	E, H, K, M	B, C, W	F	S	P, R	DAL,MSI,SOA
D55342^07@3#00&	3,000,000	125 (char. E, H) or 250 (char. K, M)	E, H, K, M	B, C, W	T, L	S	P, R	DAL,MSI,SOA
D55342^07@3#01&	3,010,000	125 (char. E, H) or 250 (char. K, M)	E, H, K, M	B, C, W	F	S	P, R	DAL,MSI,SOA
D55342^07@3#09&	3,090,000	125 (char. E, H) or 250 (char. K, M)	E, H, K, M	B, C, W	F	S	P, R	DAL,MSI,SOA
D55342^07@3#16&	3,160,000	125 (char. E, H) or 250 (char. K, M)	E, H, K, M	B, C, W	F	S	P, R	DAL,MSI,SOA
D55342^07@3#24&	3,240,000	125 (char. E, H) or 250 (char. K, M)	E, H, K, M	B, C, W	F	S	P, R	DAL,MSI,SOA
D55342^07@3#30&	3,300,000	125 (char. E, H) or 250 (char. K, M)	E, H, K, M	B, C, W	T, L, P	S	P, R	DAL,MSI,SOA
D55342^07@3#32&	3,320,000	125 (char. E, H) or 250 (char. K, M)	E, H, K, M	B, C, W	F	S	P, R	DAL,MSI,SOA
D55342^07@3#40&	3,400,000	125 (char. E, H) or 250 (char. K, M)	E, H, K, M	B, C, W	F	S	P, R	DAL,MSI,SOA
D55342^07@3#48&	3,480,000	125 (char. E, H) or 250 (char. K, M)	E, H, K, M	B, C, W	F	S	P, R	DAL,MSI,SOA
D55342^07@3#57&	3,570,000	125 (char. E, H) or 250 (char. K, M)	E, H, K, M	B, C, W	F	S	P, R	DAL,MSI,SOA
D55342^07@3#60&	3,600,000	125 (char. E, H) or 250 (char. K, M)	E, H, K, M	B, C, W	T, L	S	P, R	DAL,MSI,SOA
D55342^07@3#65&	3,650,000	125 (char. E, H) or 250 (char. K, M)	E, H, K, M	B, C, W	F	S	P, R	DAL,MSI,SOA
D55342^07@3#74&	3,740,000	125 (char. E, H) or 250 (char. K, M)	E, H, K, M	B, C, W	F	S	P, R	DAL,MSI,SOA
D55342^07@3#83&	3,830,000	125 (char. E, H) or 250 (char. K, M)	E, H, K, M	B, C, W	F	S	P, R	DAL,MSI,SOA
D55342^07@3#90&	3,900,000	125 (char. E, H) or 250 (char. K, M)	E, H, K, M	B, C, W	T, L, P	S	P, R	DAL,MSI,SOA
D55342^07@3#92&	3,920,000	125 (char. E, H) or 250 (char. K, M)	E, H, K, M	B, C, W	F	S	P, R	DAL,MSI,SOA
D55342^07@4#02&	4,020,000	125 (char. E, H) or 250 (char. K, M)	E, H, K, M	B, C, W	F	S	P, R	DAL,MSI,SOA
D55342^07@4#12&	4,120,000	125 (char. E, H) or 250 (char. K, M)	E, H, K, M	B, C, W	F	S	P, R	DAL,MSI,SOA
D55342^07@4#22&	4,220,000	125 (char. E, H) or 250 (char. K, M)	E, H, K, M	B, C, W	F	S	P, R	DAL,MSI,SOA
D55342^07@4#30&	4,300,000	125 (char. E, H) or 250 (char. K, M)	E, H, K, M	B, C, W	T, L	S	P, R	DAL,MSI,SOA

D55342^07@4#32&	4,320,000	125 (char. E, H) or 250 (char. K, M)	E, H, K, M	B, C, W	F	S	P, R	DAL,MSI,SOA
D55342^07@4#42&	4,420,000	125 (char. E, H) or 250 (char. K, M)	E, H, K, M	B, C, W	F	S	P, R	DAL,MSI,SOA
D55342^07@4#53&	4,530,000	125 (char. E, H) or 250 (char. K, M)	E, H, K, M	B, C, W	F	S	P, R	DAL,MSI,SOA
D55342^07@4#64&	4,640,000	125 (char. E, H) or 250 (char. K, M)	E, H, K, M	B, C, W	F	S	P, R	DAL,MSI,SOA
D55342^07@4#70&	4,700,000	125 (char. E, H) or 250 (char. K, M)	E, H, K, M	B, C, W	T, L, P	S	P, R	DAL,MSI,SOA
D55342^07@4#75&	4,750,000	125 (char. E, H) or 250 (char. K, M)	E, H, K, M	B, C, W	F	S	P, R	DAL,MSI,SOA
D55342^07@4#87&	4,870,000	125 (char. E, H) or 250 (char. K, M)	E, H, K, M	B, C, W	F	S	P, R	DAL,MSI,SOA
D55342^07@4#99&	4,990,000	125 (char. E, H) or 250 (char. K, M)	E, H, K, M	B, C, W	F	S	P, R	DAL,MSI,SOA
D55342^07@5#10&	5,100,000	125 (char. E, H) or 250 (char. K, M)	E, H, K, M	B, C, W	T, L	S	P, R	DAL,MSI,SOA
D55342^07@5#11&	5,110,000	125 (char. E, H) or 250 (char. K, M)	E, H, K, M	B, C, W	F	S	P, R	DAL,MSI,SOA
D55342^07@5#23&	5,230,000	125 (char. E, H) or 250 (char. K, M)	E, H, K, M	B, C, W	F	S	P, R	DAL,MSI,SOA
D55342^07@5#36&	5,360,000	125 (char. E, H) or 250 (char. K, M)	E, H, K, M	B, C, W	F	S	P, R	DAL,MSI,SOA
D55342^07@5#49&	5,490,000	125 (char. E, H) or 250 (char. K, M)	E, H, K, M	B, C, W	F	S	P, R	DAL,MSI,SOA
D55342^07@5#60&	5,600,000	125 (char. E, H) or 250 (char. K, M)	E, H, K, M	B, C, W	T, L, P	S	P, R	DAL,MSI,SOA
D55342^07@5#62&	5,620,000	125 (char. E, H) or 250 (char. K, M)	E, H, K, M	B, C, W	F	S	P, R	DAL

RM1206 RESISTORS

DECADE BREAKDOWN

Click on the link below to see the associated parts selection listing:

Resistance Range
5.60 Ohms through 9.76 Ohms
10.0 Ohms through 97.6 Ohms
100 Ohms through 976 Ohms
1,000 Ohms through 9,760 Ohms
10,000 Ohms through 97,600 Ohms
100,000 Ohms through 976,000 Ohms
1,000,000 Ohms through 5,620,000 Ohms

MIL-PRF-55342/7 (RM1206) Film Chip Resistors: 5.6 Ohms Through 9.76 Ohms

	Resistance	Power	Char.	Term.	Res. Tol./	Level 1	Level 2	
Part Number	Value (Ohms)	Rating (mW)	(^)	Type (@)	Multiplier (#)	FRL (&)	FRL (&)	Manufacturer
D55342^07@5#60&	5.60	125 (char. E, H) or 250 (char. K, M)	E, H, K, M	B, C, W	G, J, M	S, T	P, R	DAL,MSI,SOA
D55342^07@5#62&	5.62	125 (char. E, H) or 250 (char. K, M)	E, H, K, M	B, C, W	D	S, T	P, R	DAL,MSI,SOA
D55342^07@5#76&	5.76	125 (char. E, H) or 250 (char. K, M)	E, H, K, M	B, C, W	D	S, T	P, R	DAL,MSI,SOA
D55342^07@5#90&	5.90	125 (char. E, H) or 250 (char. K, M)	E, H, K, M	B, C, W	D	S, T	P, R	DAL,MSI,SOA
D55342^07@6#04&	6.04	125 (char. E, H) or 250 (char. K, M)	E, H, K, M	B, C, W	D	S, T	P, R	DAL,MSI,SOA
D55342^07@6#19&	6.19	125 (char. E, H) or 250 (char. K, M)	E, H, K, M	B, C, W	D	S, T	P, R	DAL,MSI,SOA
D55342^07@6#20&	6.20	125 (char. E, H) or 250 (char. K, M)	E, H, K, M	B, C, W	G, J	S, T	P, R	DAL,MSI,SOA
D55342^07@6#34&	6.34	125 (char. E, H) or 250 (char. K, M)	E, H, K, M	B, C, W	D	S, T	P, R	DAL,MSI,SOA
D55342^07@6#49&	6.49	125 (char. E, H) or 250 (char. K, M)	E, H, K, M	B, C, W	D	S, T	P, R	DAL,MSI,SOA
	Resistance	Power	Char.	Term.	Res. Tol./	Level 1	Level 2	
Part Number	Value (Ohms)	Rating (mW)	(^)	Type (@)	Multiplier (#)	FRL (&)	FRL (&)	Manufacturer

D55342^07@6#65&	6.65	125 (char. E, H) or 250 (char. K, M)	E, H, K, M	B, C, W	D	S, T	P, R	DAL,MSI,SOA
D55342^07@6#80&	6.80	125 (char. E, H) or 250 (char. K, M)	E, H, K, M	B, C, W	G, J, M	S, T	P, R	DAL,MSI,SOA
D55342^07@6#81&	6.81	125 (char. E, H) or 250 (char. K, M)	E, H, K, M	B, C, W	D	S, T	P, R	DAL,MSI,SOA
D55342^07@6#98&	6.98	125 (char. E, H) or 250 (char. K, M)	E, H, K, M	B, C, W	D	S, T	P, R	DAL,MSI,SOA
D55342^07@7#15&	7.15	125 (char. E, H) or 250 (char. K, M)	E, H, K, M	B, C, W	D	S, T	P, R	DAL,MSI,SOA
D55342^07@7#32&	7.32	125 (char. E, H) or 250 (char. K, M)	E, H, K, M	B, C, W	D	S, T	P, R	DAL,MSI,SOA
D55342^07@7#50&	7.50	125 (char. E, H) or 250 (char. K, M)	E, H, K, M	B, C, W	D, G, J	S, T	P, R	DAL,MSI,SOA
D55342^07@7#68&	7.68	125 (char. E, H) or 250 (char. K, M)	E, H, K, M	B, C, W	D	S, T	P, R	DAL,MSI,SOA
D55342^07@7#87&	7.87	125 (char. E, H) or 250 (char. K, M)	E, H, K, M	B, C, W	D	S, T	P, R	DAL,MSI,SOA
	Resistance	Power	Char.	Term.	Res. Tol./	Level 1	Level 2	
Part Number	Value (Ohms)	Rating (mW)	(^)	Type (@)	Multiplier (#)	FRL (&)	FRL (&)	Manufacturer
D55342^07@8#06&	8.06	125 (char. E, H) or 250 (char. K, M)	E, H, K, M	B, C, W	D	S, T	P, R	DAL,MSI,SOA
D55342^07@8#20&	8.20	125 (char. E, H) or 250 (char. K, M)	E, H, K, M	B, C, W	G, J, M	S, T	P, R	DAL,MSI,SOA
D55342^07@8#25&	8.25	125 (char. E, H) or 250 (char. K, M)	E, H, K, M	B, C, W	D	S, T	P, R	DAL,MSI,SOA
D55342^07@8#45&	8.45	125 (char. E, H) or 250 (char. K, M)	E, H, K, M	B, C, W	D	S, T	P, R	DAL,MSI,SOA
D55342^07@8#66&	8.66	125 (char. E, H) or 250 (char. K, M)	E, H, K, M	B, C, W	D	S, T	P, R	DAL,MSI,SOA
D55342^07@8#87&	8.87	125 (char. E, H) or 250 (char. K, M)	E, H, K, M	B, C, W	D	S, T	P, R	DAL,MSI,SOA
D55342^07@9#09&	9.09	125 (char. E, H) or 250 (char. K, M)	E, H, K, M	B, C, W	D	S, T	P, R	DAL,MSI,SOA
D55342^07@9#10&	9.10	125 (char. E, H) or 250 (char. K, M)	E, H, K, M	B, C, W	G, J	S, T	P, R	DAL,MSI,SOA
D55342^07@9#31&	9.31	125 (char. E, H) or 250 (char. K, M)	E, H, K, M	B, C, W	D	S, T	P, R	DAL,MSI,SOA
D55342^07@9#53&	9.53	125 (char. E, H) or 250 (char. K, M)	E, H, K, M	B, C, W	D	S, T	P, R	DAL,MSI,SOA
D55342^07@9#76&	9.76	125 (char. E, H) or 250 (char. K, M)	E, H, K, M	B, C, W	D	S, T	P, R	DAL,MSI,SOA
	Resistance	Power	Char.	Term.	Res. Tol./	Level 1	Level 2	
Part Number	Value (Ohms)	Rating (mW)	(^)	Type (@)	Multiplier (#)	FRL (&)	FRL (&)	Manufacturer

MIL-PRF-55342/7 (RM1206) Film Chip Resistors: 10.0 Ohms Through 97.6 Ohms

	Resistance	Power	Char.	Term.	Res. Tol./	Level 1	Level 2	
Part Number	Value (Ohms)	Rating (mW)	(^)	Type (@)	Multiplier (#)	FRL (&)	FRL (&)	Manufacturer
D55342^07@10#0&	10.0	125 (char. E, H) or 250 (char. K, M)	E, H, K, M	B, C, W	D, G, J, M	S, T	P, R	DAL,IRC2,MSI,SOA
D55342^07@10#2&	10.2	125 (char. E, H) or 250 (char. K, M)	E, H, K, M	B, C, W	D	S, T	P, R	DAL,IRC2,MSI,SOA
D55342^07@10#5&	10.5	125 (char. E, H) or 250 (char. K, M)	E, H, K, M	B, C, W	D	S, T	P, R	DAL,IRC2,MSI,SOA
D55342^07@10#7&	10.7	125 (char. E, H) or 250 (char. K, M)	E, H, K, M	B, C, W	D	S, T	P, R	DAL,IRC2,MSI,SOA
D55342^07@11#0&	11.0	125 (char. E, H) or 250 (char. K, M)	E, H, K, M	B, C, W	D, G, J	S, T	P, R	DAL,IRC2,MSI,SOA
D55342^07@11#3&	11.3	125 (char. E, H) or 250 (char. K, M)	E, H, K, M	B, C, W	D	S, T	P, R	DAL,IRC2,MSI,SOA
D55342^07@11#5&	11.5	125 (char. E, H) or 250 (char. K, M)	E, H, K, M	B, C, W	D	S, T	P, R	DAL,IRC2,MSI,SOA
D55342^07@11#8&	11.8	125 (char. E, H) or 250 (char. K, M)	E, H, K, M	B, C, W	D	S, T	P, R	DAL,IRC2,MSI,SOA
D55342^07@12#0&	12.0	125 (char. E, H) or 250 (char. K, M)	E, H, K, M	B, C, W	G, J, M	S, T	P, R	DAL,IRC2,MSI,SOA
	Resistance	Power	Char.	Term.	Res. Tol./	Level 1	Level 2	
Part Number	Value (Ohms)	Rating (mW)	(^)	Type (@)	Multiplier (#)	FRL (&)	FRL (&)	Manufacturer
D55342^07@12#1&	12.1	125 (char. E, H) or 250 (char. K, M)	E, H, K, M	B, C, W	D	S, T	P, R	DAL,IRC2,MSI,SOA
D55342^07@12#4&	12.4	125 (char. E, H) or 250 (char. K, M)	E, H, K, M	B, C, W	D	S, T	P, R	DAL,IRC2,MSI,SOA
D55342^07@12#7&	12.7	125 (char. E, H) or 250 (char. K, M)	E, H, K, M	B, C, W	D	S, T	P, R	DAL,IRC2,MSI,SOA
D55342^07@13#0&	13.0	125 (char. E, H) or 250 (char. K, M)	E, H, K, M	B, C, W	D, G, J	S, T	P, R	DAL,IRC2,MSI,SOA
D55342^07@13#3&	13.3	125 (char. E, H) or 250 (char. K, M)	E, H, K, M	B, C, W	D	S, T	P, R	DAL,IRC2,MSI,SOA

D55342^07@13#7&	13.7	125 (char. E, H) or 250 (char. K, M)	E, H, K, M	B, C, W	D	S, T	P, R	DAL,IRC2,MSI,SOA
D55342^07@14#0&	14.0	125 (char. E, H) or 250 (char. K, M)	E, H, K, M	B, C, W	D	S, T	P, R	DAL,IRC2,MSI,SOA
D55342^07@14#3&	14.3	125 (char. E, H) or 250 (char. K, M)	E, H, K, M	B, C, W	D	S, T	P, R	DAL,IRC2,MSI,SOA
D55342^07@14#7&	14.7	125 (char. E, H) or 250 (char. K, M)	E, H, K, M	B, C, W	D	S, T	P, R	DAL,IRC2,MSI,SOA
	Resistance	Power	Char.	Term.	Res. Tol./	Level 1	Level 2	
Part Number	Value (Ohms)	Rating (mW)	(^)	Type (@)	Multiplier (#)	FRL (&)	FRL (&)	Manufacturer
D55342^07@15#0&	15.0	125 (char. E, H) or 250 (char. K, M)	E, H, K, M	B, C, W	D, G, J, M	S, T	P, R	DAL,IRC2,MSI,SOA
D55342^07@15#4&	15.4	125 (char. E, H) or 250 (char. K, M)	E, H, K, M	B, C, W	D	S, T	P, R	DAL,IRC2,MSI,SOA
D55342^07@15#8&	15.8	125 (char. E, H) or 250 (char. K, M)	E, H, K, M	B, C, W	D	S, T	P, R	DAL,IRC2,MSI,SOA
D55342^07@16#0&	16.0	125 (char. E, H) or 250 (char. K, M)	E, H, K, M	B, C, W	G, J	S, T	P, R	DAL,IRC2,MSI,SOA
D55342^07@16#2&	16.2	125 (char. E, H) or 250 (char. K, M)	E, H, K, M	B, C, W	D	S, T	P, R	DAL,IRC2,MSI,SOA
D55342^07@16#5&	16.5	125 (char. E, H) or 250 (char. K, M)	E, H, K, M	B, C, W	D	S, T	P, R	DAL,IRC2,MSI,SOA
D55342^07@16#9&	16.9	125 (char. E, H) or 250 (char. K, M)	E, H, K, M	B, C, W	D	S, T	P, R	DAL,IRC2,MSI,SOA
D55342^07@17#4&	17.4	125 (char. E, H) or 250 (char. K, M)	E, H, K, M	B, C, W	D	S, T	P, R	DAL,IRC2,MSI,SOA
D55342^07@17#8&	17.8	125 (char. E, H) or 250 (char. K, M)	E, H, K, M	B, C, W	D	S, T	P, R	DAL,IRC2,MSI,SOA
	Resistance	Power	Char.	Term.	Res. Tol./	Level 1	Level 2	
Part Number	Value (Ohms)	Rating (mW)	(^)	Type (@)	Multiplier (#)	FRL (&)	FRL (&)	Manufacturer
D55342^07@18#0&	18.0	125 (char. E, H) or 250 (char. K, M)	E, H, K, M	B, C, W	G, J, M	S, T	P, R	DAL,IRC2,MSI,SOA
D55342^07@18#2&	18.2	125 (char. E, H) or 250 (char. K, M)	E, H, K, M	B, C, W	D	S, T	P, R	DAL,IRC2,MSI,SOA
D55342^07@18#7&	18.7	125 (char. E, H) or 250 (char. K, M)	E, H, K, M	B, C, W	D	S, T	P, R	DAL,IRC2,MSI,SOA
D55342^07@19#1&	19.1	125 (char. E, H) or 250 (char. K, M)	E, H, K, M	B, C, W	D	S, T	P, R	DAL,IRC2,MSI,SOA
D55342^07@19#6&	19.6	125 (char. E, H) or 250 (char. K, M)	E, H, K, M	B, C, W	D	S, T	P, R	DAL,IRC2,MSI,SOA
D55342^07@20#0&	20.0	125 (char. E, H) or 250 (char. K, M)	E, H, K, M	B, C, W	D, G, J, M	S, T	P, R	DAL,IRC2,MSI,SOA
D55342^07@20#5&	20.5	125 (char. E, H) or 250 (char. K, M)	E, H, K, M	B, C, W	D	S, T	P, R	DAL,IRC2,MSI,SOA
D55342^07@21#0&	21.0	125 (char. E, H) or 250 (char. K, M)	E, H, K, M	B, C, W	D	S, T	P, R	DAL,IRC2,MSI,SOA
D55342^07@21#5&	21.5	125 (char. E, H) or 250 (char. K, M)	E, H, K, M	B, C, W	D	S, T	P, R	DAL,IRC2,MSI,SOA
	Resistance	Power	Char.	Term.	Res. Tol./	Level 1	Level 2	
Part Number	Value (Ohms)	Rating (mW)	(^)	Type (@)	Multiplier (#)	FRL (&)	FRL (&)	Manufacturer
D55342^07@22#0&	22.0	125 (char. E, H) or 250 (char. K, M)	E, H, K, M	B, C, W	G, J, M	S, T	P, R	DAL,IRC2,MSI,SOA
D55342^07@22#1&	22.1	125 (char. E, H) or 250 (char. K, M)	E, H, K, M	B, C, W	D	S, T	P, R	DAL,IRC2,MSI,SOA
D55342^07@22#6&	22.6	125 (char. E, H) or 250 (char. K, M)	E, H, K, M	B, C, W	D	S, T	P, R	DAL,IRC2,MSI,SOA
D55342^07@23#2&	23.2	125 (char. E, H) or 250 (char. K, M)	E, H, K, M	B, C, W	D	S, T	P, R	DAL,IRC2,MSI,SOA
D55342^07@23#7&	23.7	125 (char. E, H) or 250 (char. K, M)	E, H, K, M	B, C, W	D	S, T	P, R	DAL,IRC2,MSI,SOA
D55342^07@24#0&	24.0	125 (char. E, H) or 250 (char. K, M)	E, H, K, M	B, C, W	G, J	S, T	P, R	DAL,IRC2,MSI,SOA
D55342^07@24#3&	24.3	125 (char. E, H) or 250 (char. K, M)	E, H, K, M	B, C, W	D	S, T	P, R	DAL,IRC2,MSI,SOA
D55342^07@24#9&	24.9	125 (char. E, H) or 250 (char. K, M)	E, H, K, M	B, C, W	D	S, T	P, R	DAL,IRC2,MSI,SOA
D55342^07@25#5&	25.5	125 (char. E, H) or 250 (char. K, M)	E, H, K, M	B, C, W	D	S, T	P, R	DAL,IRC2,MSI,SOA
	Resistance	Power	Char.	Term.	Res. Tol./	Level 1	Level 2	
Part Number	Value (Ohms)	Rating (mW)	(^)	Type (@)	Multiplier (#)	FRL (&)	FRL (&)	Manufacturer
D55342^07@26#1&	26.1	125 (char. E, H) or 250 (char. K, M)	E, H, K, M	B, C, W	D	S, T	P, R	DAL,IRC2,MSI,SOA
D55342^07@26#7&	26.7	125 (char. E, H) or 250 (char. K, M)	E, H, K, M	B, C, W	D	S, T	P, R	DAL,IRC2,MSI,SOA
D55342^07@27#0&	27.0	125 (char. E, H) or 250 (char. K, M)	E, H, K, M	B, C, W	G, J, M	S, T	P, R	DAL,IRC2,MSI,SOA
D55342^07@27#4&	27.4	125 (char. E, H) or 250 (char. K, M)	E, H, K, M	B, C, W	D	S, T	P, R	DAL,IRC2,MSI,SOA
D55342^07@28#0&	28.0	125 (char. E, H) or 250 (char. K, M)	E, H, K, M	B, C, W	D	S, T	P, R	DAL,IRC2,MSI,SOA
D55342^07@28#7&	28.7	125 (char. E, H) or 250 (char. K, M)	E, H, K, M	B, C, W	D	S, T	P, R	DAL,IRC2,MSI,SOA
D55342^07@29#4&	29.4	125 (char. E, H) or 250 (char. K, M)	E, H, K, M	B, C, W	D	S, T	P, R	DAL,IRC2,MSI,SOA
D55342^07@30#0&	30.0	125 (char. E, H) or 250 (char. K, M)	E, H, K, M	B, C, W	G, J	S, T	P, R	DAL,IRC2,MSI,SOA

D55342^07@30#1&	30.1	125 (char. E, H) or 250 (char. K, M)	E, H, K, M	B, C, W	D	S, T	P, R	DAL,IRC2,MSI,SOA
	Resistance	Power	Char.	Term.	Res. Tol./	Level 1	Level 2	
Part Number	Value (Ohms)	Rating (mW)	(^)	Type (@)	Multiplier (#)	FRL (&)	FRL (&)	Manufacturer
D55342^07@30#9&	30.9	125 (char. E, H) or 250 (char. K, M)	E, H, K, M	B, C, W	D	S, T	P, R	DAL,IRC2,MSI,SOA
D55342^07@31#6&	31.6	125 (char. E, H) or 250 (char. K, M)	E, H, K, M	B, C, W	D	S, T	P, R	DAL,IRC2,MSI,SOA
D55342^07@32#4&	32.4	125 (char. E, H) or 250 (char. K, M)	E, H, K, M	B, C, W	D	S, T	P, R	DAL,IRC2,MSI,SOA
D55342^07@33#0&	33.0	125 (char. E, H) or 250 (char. K, M)	E, H, K, M	B, C, W	G, J, M	S, T	P, R	DAL,IRC2,MSI,SOA
D55342^07@33#2&	33.2	125 (char. E, H) or 250 (char. K, M)	E, H, K, M	B, C, W	D	S, T	P, R	DAL,IRC2,MSI,SOA
D55342^07@34#0&	34.0	125 (char. E, H) or 250 (char. K, M)	E, H, K, M	B, C, W	D	S, T	P, R	DAL,IRC2,MSI,SOA
D55342^07@34#8&	34.8	125 (char. E, H) or 250 (char. K, M)	E, H, K, M	B, C, W	D	S, T	P, R	DAL,IRC2,MSI,SOA
D55342^07@35#7&	35.7	125 (char. E, H) or 250 (char. K, M)	E, H, K, M	B, C, W	D	S, T	P, R	DAL,IRC2,MSI,SOA
D55342^07@36#0&	36.0	125 (char. E, H) or 250 (char. K, M)	E, H, K, M	B, C, W	G, J	S, T	P, R	DAL,IRC2,MSI,SOA
	Resistance	Power	Char.	Term.	Res. Tol./	Level 1	Level 2	
Part Number	Value (Ohms)	Rating (mW)	(^)	Type (@)	Multiplier (#)	FRL (&)	FRL (&)	Manufacturer
D55342^07@36#5&	36.5	125 (char. E, H) or 250 (char. K, M)	E, H, K, M	B, C, W	D	S, T	P, R	DAL,IRC2,MSI,SOA
D55342^07@37#4&	37.4	125 (char. E, H) or 250 (char. K, M)	E, H, K, M	B, C, W	D	S, T	P, R	DAL,IRC2,MSI,SOA
D55342^07@38#3&	38.3	125 (char. E, H) or 250 (char. K, M)	E, H, K, M	B, C, W	D	S, T	P, R	DAL,IRC2,MSI,SOA
D55342^07@39#0&	39.0	125 (char. E, H) or 250 (char. K, M)	E, H, K, M	B, C, W	G, J, M	S, T	P, R	DAL,IRC2,MSI,SOA
D55342^07@39#2&	39.2	125 (char. E, H) or 250 (char. K, M)	E, H, K, M	B, C, W	D	S, T	P, R	DAL,IRC2,MSI,SOA
D55342^07@40#2&	40.2	125 (char. E, H) or 250 (char. K, M)	E, H, K, M	B, C, W	D	S, T	P, R	DAL,IRC2,MSI,SOA
D55342^07@41#2&	41.2	125 (char. E, H) or 250 (char. K, M)	E, H, K, M	B, C, W	D	S, T	P, R	DAL,IRC2,MSI,SOA
D55342^07@42#2&	42.2	125 (char. E, H) or 250 (char. K, M)	E, H, K, M	B, C, W	D	S, T	P, R	DAL,IRC2,MSI,SOA
D55342^07@43#0&	43.0	125 (char. E, H) or 250 (char. K, M)	E, H, K, M	B, C, W	G, J	S, T	P, R	DAL,IRC2,MSI,SOA
	Resistance	Power	Char.	Term.	Res. Tol./	Level 1	Level 2	
Part Number	Value (Ohms)	Rating (mW)	(^)	Type (@)	Multiplier (#)	FRL (&)	FRL (&)	Manufacturer
D55342^07@43#2&	43.2	125 (char. E, H) or 250 (char. K, M)	E, H, K, M	B, C, W	D	S, T	P, R	DAL,IRC2,MSI,SOA
D55342^07@44#2&	44.2	125 (char. E, H) or 250 (char. K, M)	E, H, K, M	B, C, W	D	S, T	P, R	DAL,IRC2,MSI,SOA
D55342^07@45#3&	45.3	125 (char. E, H) or 250 (char. K, M)	E, H, K, M	B, C, W	D	S, T	P, R	DAL,IRC2,MSI,SOA
D55342^07@46#4&	46.4	125 (char. E, H) or 250 (char. K, M)	E, H, K, M	B, C, W	D	S, T	P, R	DAL,IRC2,MSI,SOA
D55342^07@47#0&	47.0	125 (char. E, H) or 250 (char. K, M)	E, H, K, M	B, C, W	G, J, M	S, T	P, R	DAL,IRC2,MSI,SOA
D55342^07@47#5&	47.5	125 (char. E, H) or 250 (char. K, M)	E, H, K, M	B, C, W	D	S, T	P, R	DAL,IRC2,MSI,SOA
D55342^07@48#7&	48.7	125 (char. E, H) or 250 (char. K, M)	E, H, K, M	B, C, W	D	S, T	P, R	DAL,IRC2,MSI,SOA
D55342^07@49#9&	49.9	125 (char. E, H) or 250 (char. K, M)	E, H, K, M	B, C, W	D	S, T	P, R	DAL,IRC2,MSI,SOA
D55342^07@51#0&	51.0	125 (char. E, H) or 250 (char. K, M)	E, H, K, M	B, C, W	G, J	S, T	P, R	DAL,IRC2,MSI,SOA
	Resistance	Power	Char.	Term.	Res. Tol./	Level 1	Level 2	
Part Number	Value (Ohms)	Rating (mW)	(^)	Type (@)	Multiplier (#)	FRL (&)	FRL (&)	Manufacturer
D55342^07@51#1&	51.1	125 (char. E, H) or 250 (char. K, M)	E, H, K, M	B, C, W	D	S, T	P, R	DAL,IRC2,MSI,SOA
D55342^07@52#3&	52.3	125 (char. E, H) or 250 (char. K, M)	E, H, K, M	B, C, W	D	S, T	P, R	DAL,IRC2,MSI,SOA
D55342^07@53#6&	53.6	125 (char. E, H) or 250 (char. K, M)	E, H, K, M	B, C, W	D	S, T	P, R	DAL,IRC2,MSI,SOA
D55342^07@54#9&	54.9	125 (char. E, H) or 250 (char. K, M)	E, H, K, M	B, C, W	D	S, T	P, R	DAL,IRC2,MSI,SOA
D55342^07@56#0&	56.0	125 (char. E, H) or 250 (char. K, M)	E, H, K, M	B, C, W	G, J, M	S, T	P, R	DAL,IRC2,MSI,SOA
D55342^07@56#2&	56.2	125 (char. E, H) or 250 (char. K, M)	E, H, K, M	B, C, W	D	S, T	P, R	DAL,IRC2,MSI,SOA
D55342^07@57#6&	57.6	125 (char. E, H) or 250 (char. K, M)	E, H, K, M	B, C, W	D	S, T	P, R	DAL,IRC2,MSI,SOA
D55342^07@59#0&	59.0	125 (char. E, H) or 250 (char. K, M)	E, H, K, M	B, C, W	D	S, T	P, R	DAL,IRC2,MSI,SOA
D55342^07@60#4&	60.4	125 (char. E, H) or 250 (char. K, M)	E, H, K, M	B, C, W	D	S, T	P, R	DAL,IRC2,MSI,SOA
	Resistance	Power	Char.	Term.	Res. Tol./	Level 1	Level 2	
Part Number	Value (Ohms)	Rating (mW)	(^)	Type (@)	Multiplier (#)	FRL (&)	FRL (&)	Manufacturer

D55342^07@61#9&	61.9	125 (char. E, H) or 250 (char. K, M)	E, H, K, M	B, C, W	D	S, T	P, R	DAL,IRC2,MSI,SOA
D55342^07@62#0&	62.0	125 (char. E, H) or 250 (char. K, M)	E, H, K, M	B, C, W	G, J	S, T	P, R	DAL,IRC2,MSI,SOA
D55342^07@63#4&	63.4	125 (char. E, H) or 250 (char. K, M)	E, H, K, M	B, C, W	D	S, T	P, R	DAL,IRC2,MSI,SOA
D55342^07@64#9&	64.9	125 (char. E, H) or 250 (char. K, M)	E, H, K, M	B, C, W	D	S, T	P, R	DAL,IRC2,MSI,SOA
D55342^07@66#5&	66.5	125 (char. E, H) or 250 (char. K, M)	E, H, K, M	B, C, W	D	S, T	P, R	DAL,IRC2,MSI,SOA
D55342^07@68#0&	68.0	125 (char. E, H) or 250 (char. K, M)	E, H, K, M	B, C, W	G, J, M	S, T	P, R	DAL,IRC2,MSI,SOA
D55342^07@68#1&	68.1	125 (char. E, H) or 250 (char. K, M)	E, H, K, M	B, C, W	D	S, T	P, R	DAL,IRC2,MSI,SOA
D55342^07@69#8&	69.8	125 (char. E, H) or 250 (char. K, M)	E, H, K, M	B, C, W	D	S, T	P, R	DAL,IRC2,MSI,SOA
D55342^07@71#5&	71.5	125 (char. E, H) or 250 (char. K, M)	E, H, K, M	B, C, W	D	S, T	P, R	DAL,IRC2,MSI,SOA
	Resistance	Power	Char.	Term.	Res. Tol./	Level 1	Level 2	
Part Number	Value (Ohms)	Rating (mW)	(^)	Type (@)	Multiplier (#)	FRL (&)	FRL (&)	Manufacturer
D55342^07@73#2&	73.2	125 (char. E, H) or 250 (char. K, M)	E, H, K, M	B, C, W	D	S, T	P, R	DAL,IRC2,MSI,SOA
D55342^07@75#0&	75.0	125 (char. E, H) or 250 (char. K, M)	E, H, K, M	B, C, W	D, G, J	S, T	P, R	DAL,IRC2,MSI,SOA
D55342^07@76#8&	76.8	125 (char. E, H) or 250 (char. K, M)	E, H, K, M	B, C, W	D	S, T	P, R	DAL,IRC2,MSI,SOA
D55342^07@78#7&	78.7	125 (char. E, H) or 250 (char. K, M)	E, H, K, M	B, C, W	D	S, T	P, R	DAL,IRC2,MSI,SOA
D55342^07@80#6&	80.6	125 (char. E, H) or 250 (char. K, M)	E, H, K, M	B, C, W	D	S, T	P, R	DAL,IRC2,MSI,SOA
D55342^07@82#0&	82.0	125 (char. E, H) or 250 (char. K, M)	E, H, K, M	B, C, W	G, J, M	S, T	P, R	DAL,IRC2,MSI,SOA
D55342^07@82#5&	82.5	125 (char. E, H) or 250 (char. K, M)	E, H, K, M	B, C, W	D	S, T	P, R	DAL,IRC2,MSI,SOA
D55342^07@84#5&	84.5	125 (char. E, H) or 250 (char. K, M)	E, H, K, M	B, C, W	D	S, T	P, R	DAL,IRC2,MSI,SOA
D55342^07@86#6&	86.6	125 (char. E, H) or 250 (char. K, M)	E, H, K, M	B, C, W	D	S, T	P, R	DAL,IRC2,MSI,SOA
	Resistance	Power	Char.	Term.	Res. Tol./	Level 1	Level 2	
Part Number	Value (Ohms)	Rating (mW)	(^)	Type (@)	Multiplier (#)	FRL (&)	FRL (&)	Manufacturer
D55342^07@88#7&	88.7	125 (char. E, H) or 250 (char. K, M)	E, H, K, M	B, C, W	D	S, T	P, R	DAL,IRC2,MSI,SOA
D55342^07@90#9&	90.9	125 (char. E, H) or 250 (char. K, M)	E, H, K, M	B, C, W	D	S, T	P, R	DAL,IRC2,MSI,SOA
D55342^07@91#0&	91.0	125 (char. E, H) or 250 (char. K, M)	E, H, K, M	B, C, W	G, J	S, T	P, R	DAL,IRC2,MSI,SOA
D55342^07@93#1&	93.1	125 (char. E, H) or 250 (char. K, M)	E, H, K, M	B, C, W	D	S, T	P, R	DAL,IRC2,MSI,SOA
D55342^07@95#3&	95.3	125 (char. E, H) or 250 (char. K, M)	E, H, K, M	B, C, W	D	S, T	P, R	DAL,IRC2,MSI,SOA
D55342^07@97#6&	97.6	125 (char. E, H) or 250 (char. K, M)	E, H, K, M	B, C, W	D	S, T	P, R	DAL,IRC2,MSI,SOA
	Resistance	Power	Char.	Term.	Res. Tol./	Level 1	Level 2	
Part Number	Value (Ohms)	Rating (mW)	(^)	Type (@)	Multiplier (#)	FRL (&)	FRL (&)	Manufacturer

MIL-PRF-55342/7 (RM1206) Film Chip Resistors: 100 Ohms Through 976 Ohms

	Resistance	Power	Char.	Term.	Res. Tol./	Level 1	Level 2	
Part Number	Value (Ohms)	Rating (mW)	(^)	Type (@)	Multiplier (#)	FRL (&)	FRL (&)	Manufacturer
D55342^07@100#&	100	125 (char. E, H) or 250 (char. K, M)	E, H, K, M	B, C, W	D, G, J, M	S, T	P, R	DAL,IRC2,MSI,SOA
D55342^07@102#&	102	125 (char. E, H) or 250 (char. K, M)	E, H, K, M	B, C, W	D	S, T	P, R	DAL,IRC2,MSI,OHM, SOA
D55342^07@105#&	105	125 (char. E, H) or 250 (char. K, M)	E, H, K, M	B, C, W	D	S, T	P, R	DAL,IRC2,MSI,OHM, SOA
D55342^07@107#&	107	125 (char. E, H) or 250 (char. K, M)	E, H, K, M	B, C, W	D	S, T	P, R	DAL,IRC2,MSI,OHM, SOA
D55342^07@110#&	110	125 (char. E, H) or 250 (char. K, M)	E, H, K, M	B, C, W	D, G, J	S, T	P, R	DAL,IRC2,MSI,OHM, SOA
D55342^07@113#&	113	125 (char. E, H) or 250 (char. K, M)	E, H, K, M	B, C, W	D	S, T	P, R	DAL,IRC2,MSI,OHM, SOA
D55342^07@115#&	115	125 (char. E, H) or 250 (char. K, M)	E, H, K, M	B, C, W	D	S, T	P, R	DAL,IRC2,MSI,OHM, SOA
D55342^07@118#&	118	125 (char. E, H) or 250 (char. K, M)	E, H, K, M	B, C, W	D	S, T	P, R	DAL,IRC2,MSI,OHM, SOA
D55342^07@120#&	120	125 (char. E, H) or 250 (char. K, M)	E, H, K, M	B, C, W	G, J, M	S, T	P, R	DAL,IRC2,MSI,OHM, SOA
D55342^07@121#&	121	125 (char. E, H) or 250 (char. K, M)	E, H, K, M	B, C, W	D	S, T	P, R	DAL,IRC2,MSI,OHM, SOA

	Resistance	Power	Char.	Term.	Res. Tol./	Level 1	Level 2	
Part Number	Value (Ohms)	Rating (mW)	(^)	Type (@)	Multiplier (#)	FRL (&)	FRL (&)	Manufacturer
D55342^07@124#&	124	125 (char. E, H) or 250 (char. K, M)	E, H, K, M	B, C, W	D	S, T	P, R	DAL,IRC2,MSI,OHM, SOA
D55342^07@127#&	127	125 (char. E, H) or 250 (char. K, M)	E, H, K, M	B, C, W	D	S, T	P, R	DAL,IRC2,MSI,OHM, SOA
D55342^07@130#&	130	125 (char. E, H) or 250 (char. K, M)	E, H, K, M	B, C, W	D, G, J	S, T	P, R	DAL,IRC2,MSI,OHM, SOA
D55342^07@133#&	133	125 (char. E, H) or 250 (char. K, M)	E, H, K, M	B, C, W	D	S, T	P, R	DAL,IRC2,MSI,OHM, SOA
D55342^07@137#&	137	125 (char. E, H) or 250 (char. K, M)	E, H, K, M	B, C, W	D	S, T	P, R	DAL,IRC2,MSI,OHM, SOA
D55342^07@140#&	140	125 (char. E, H) or 250 (char. K, M)	E, H, K, M	B, C, W	D	S, T	P, R	DAL,IRC2,MSI,OHM, SOA
D55342^07@143#&	143	125 (char. E, H) or 250 (char. K, M)	E, H, K, M	B, C, W	D	S, T	P, R	DAL,IRC2,MSI,OHM, SOA
D55342^07@147#&	147	125 (char. E, H) or 250 (char. K, M)	E, H, K, M	B, C, W	D	S, T	P, R	DAL,IRC2,MSI,OHM, SOA
D55342^07@150#&	150	125 (char. E, H) or 250 (char. K, M)	E, H, K, M	B, C, W	D, G, J, M	S, T	P, R	DAL,IRC2,MSI,OHM, SOA
	Resistance	Power	Char.	Term.	Res. Tol./	Level 1	Level 2	
Part Number	Value (Ohms)	Rating (mW)	(^)	Type (@)	Multiplier (#)	FRL (&)	FRL (&)	Manufacturer
D55342^07@154#&	154	125 (char. E, H) or 250 (char. K, M)	E, H, K, M	B, C, W	D	S, T	P, R	DAL,IRC2,MSI,OHM, SOA
D55342^07@158#&	158	125 (char. E, H) or 250 (char. K, M)	E, H, K, M	B, C, W	D	S, T	P, R	DAL,IRC2,MSI,OHM, SOA
D55342^07@160#&	160	125 (char. E, H) or 250 (char. K, M)	E, H, K, M	B, C, W	G, J	S, T	P, R	DAL,IRC2,MSI,OHM, SOA
D55342^07@162#&	162	125 (char. E, H) or 250 (char. K, M)	E, H, K, M	B, C, W	D	S, T	P, R	DAL,IRC2,MSI,OHM, SOA
D55342^07@165#&	165	125 (char. E, H) or 250 (char. K, M)	E, H, K, M	B, C, W	D	S, T	P, R	DAL,IRC2,MSI,OHM, SOA
D55342^07@169#&	169	125 (char. E, H) or 250 (char. K, M)	E, H, K, M	B, C, W	D	S, T	P, R	DAL,IRC2,MSI,OHM, SOA
D55342^07@174#&	174	125 (char. E, H) or 250 (char. K, M)	E, H, K, M	B, C, W	D	S, T	P, R	DAL,IRC2,MSI,OHM, SOA
D55342^07@178#&	178	125 (char. E, H) or 250 (char. K, M)	E, H, K, M	B, C, W	D	S, T	P, R	DAL,IRC2,MSI,OHM, SOA
D55342^07@180#&	180	125 (char. E, H) or 250 (char. K, M)	E, H, K, M	B, C, W	G, J, M	S, T	P, R	DAL,IRC2,MSI,OHM, SOA
	Resistance	Power	Char.	Term.	Res. Tol./	Level 1	Level 2	
Part Number	Value (Ohms)	Rating (mW)	(^)	Type (@)	Multiplier (#)	FRL (&)	FRL (&)	Manufacturer
D55342^07@182#&	182	125 (char. E, H) or 250 (char. K, M)	E, H, K, M	B, C, W	D	S, T	P, R	DAL,IRC2,MSI,OHM, SOA
D55342^07@187#&	187	125 (char. E, H) or 250 (char. K, M)	E, H, K, M	B, C, W	D	S, T	P, R	DAL,IRC2,MSI,OHM, SOA
D55342^07@191#&	191	125 (char. E, H) or 250 (char. K, M)	E, H, K, M	B, C, W	D	S, T	P, R	DAL,IRC2,MSI,OHM, SOA
D55342^07@196#&	196	125 (char. E, H) or 250 (char. K, M)	E, H, K, M	B, C, W	D	S, T	P, R	DAL,IRC2,MSI,OHM, SOA
D55342^07@200#&	200	125 (char. E, H) or 250 (char. K, M)	E, H, K, M	B, C, W	D, G, J, M	S, T	P, R	DAL,IRC2,MSI,OHM, SOA
D55342^07@205#&	205	125 (char. E, H) or 250 (char. K, M)	E, H, K, M	B, C, W	D	S, T	P, R	DAL,IRC2,MSI,OHM, SOA
D55342^07@210#&	210	125 (char. E, H) or 250 (char. K, M)	E, H, K, M	B, C, W	D	S, T	P, R	DAL,IRC2,MSI,OHM, SOA
D55342^07@215#&	215	125 (char. E, H) or 250 (char. K, M)	E, H, K, M	B, C, W	D	S, T	P, R	DAL,IRC2,MSI,OHM, SOA
D55342^07@220#&	220	125 (char. E, H) or 250 (char. K, M)	E, H, K, M	B, C, W	G, J, M	S, T	P, R	DAL,IRC2,MSI,OHM, SOA
	Resistance	Power	Char.	Term.	Res. Tol./	Level 1	Level 2	
Part Number	Value (Ohms)	Rating (mW)	(^)	Type (@)	Multiplier (#)	FRL (&)	FRL (&)	Manufacturer
D55342^07@221#&	221	125 (char. E, H) or 250 (char. K, M)	E, H, K, M	B, C, W	D	S, T	P, R	DAL,IRC2,MSI,OHM, SOA
D55342^07@226#&	226	125 (char. E, H) or 250 (char. K, M)	E, H, K, M	B, C, W	D	S, T	P, R	DAL,IRC2,MSI,OHM, SOA
D55342^07@232#&	232	125 (char. E, H) or 250 (char. K, M)	E, H, K, M	B, C, W	D	S, T	P, R	DAL,IRC2,MSI,OHM, SOA
D55342^07@237#&	237	125 (char. E, H) or 250 (char. K, M)	E, H, K, M	B, C, W	D	S, T	P, R	DAL,IRC2,MSI,OHM, SOA
D55342^07@240#&	240	125 (char. E, H) or 250 (char. K, M)	E, H, K, M	B, C, W	G, J	S, T	P, R	DAL,IRC2,MSI,OHM, SOA
D55342^07@243#&	243	125 (char. E, H) or 250 (char. K, M)	E, H, K, M	B, C, W	D	S, T	P, R	DAL,IRC2,MSI,OHM, SOA
D55342^07@249#&	249	125 (char. E, H) or 250 (char. K, M)	E, H, K, M	B, C, W	D	S, T	P, R	DAL,IRC2,MSI,OHM, SOA
D55342^07@255#&	255	125 (char. E, H) or 250 (char. K, M)	E, H, K, M	B, C, W	D	S, T	P, R	DAL,IRC2,MSI,OHM, SOA
D55342^07@261#&	261	125 (char. E, H) or 250 (char. K, M)	E, H, K, M	B, C, W	D	S, T	P, R	DAL,IRC2,MSI,OHM, SOA
	Resistance	Power	Char.	Term.	Res. Tol./	Level 1	Level 2	
Part Number	Value (Ohms)	Rating (mW)	(^)	Type (@)	Multiplier (#)	FRL (&)	FRL (&)	Manufacturer
D55342^07@267#&	267	125 (char. E, H) or 250 (char. K, M)	E, H, K, M	B, C, W	D	S, T	P, R	DAL,IRC2,MSI,OHM, SOA

D55342^07@270#&	270	125 (char. E, H) or 250 (char. K, M)	E, H, K, M	B, C, W	G, J, M	S, T	P, R	DAL,IRC2,MSI,OHM, SOA
D55342^07@274#&	274	125 (char. E, H) or 250 (char. K, M)	E, H, K, M	B, C, W	D	S, T	P, R	DAL,IRC2,MSI,OHM, SOA
D55342^07@280#&	280	125 (char. E, H) or 250 (char. K, M)	E, H, K, M	B, C, W	D	S, T	P, R	DAL,IRC2,MSI,OHM, SOA
D55342^07@287#&	287	125 (char. E, H) or 250 (char. K, M)	E, H, K, M	B, C, W	D	S, T	P, R	DAL,IRC2,MSI,OHM, SOA
D55342^07@294#&	294	125 (char. E, H) or 250 (char. K, M)	E, H, K, M	B, C, W	D	S, T	P, R	DAL,IRC2,MSI,OHM, SOA
D55342^07@300#&	300	125 (char. E, H) or 250 (char. K, M)	E, H, K, M	B, C, W	G, J	S, T	P, R	DAL,IRC2,MSI,OHM, SOA
D55342^07@301#&	301	125 (char. E, H) or 250 (char. K, M)	E, H, K, M	B, C, W	D	S, T	P, R	DAL,IRC2,MSI,OHM, SOA
D55342^07@309#&	309	125 (char. E, H) or 250 (char. K, M)	E, H, K, M	B, C, W	D	S, T	P, R	DAL,IRC2,MSI,OHM, SOA
	Resistance	Power	Char.	Term.	Res. Tol./	Level 1	Level 2	
Part Number	Value (Ohms)	Rating (mW)	(^)	Type (@)	Multiplier (#)	FRL (&)	FRL (&)	Manufacturer
D55342^07@316#&	316	125 (char. E, H) or 250 (char. K, M)	E, H, K, M	B, C, W	D	S, T	P, R	DAL,IRC2,MSI,OHM, SOA
D55342^07@324#&	324	125 (char. E, H) or 250 (char. K, M)	E, H, K, M	B, C, W	D	S, T	P, R	DAL,IRC2,MSI,OHM, SOA
D55342^07@330#&	330	125 (char. E, H) or 250 (char. K, M)	E, H, K, M	B, C, W	G, J, M	S, T	P, R	DAL,IRC2,MSI,OHM, SOA
D55342^07@332#&	332	125 (char. E, H) or 250 (char. K, M)	E, H, K, M	B, C, W	D	S, T	P, R	DAL,IRC2,MSI,OHM, SOA
D55342^07@340#&	340	125 (char. E, H) or 250 (char. K, M)	E, H, K, M	B, C, W	D	S, T	P, R	DAL,IRC2,MSI,OHM, SOA
D55342^07@348#&	348	125 (char. E, H) or 250 (char. K, M)	E, H, K, M	B, C, W	D	S, T	P, R	DAL,IRC2,MSI,OHM, SOA
D55342^07@357#&	357	125 (char. E, H) or 250 (char. K, M)	E, H, K, M	B, C, W	D	S, T	P, R	DAL,IRC2,MSI,OHM, SOA
D55342^07@360#&	360	125 (char. E, H) or 250 (char. K, M)	E, H, K, M	B, C, W	G, J	S, T	P, R	DAL,IRC2,MSI,OHM, SOA
D55342^07@365#&	365	125 (char. E, H) or 250 (char. K, M)	E, H, K, M	B, C, W	D	S, T	P, R	DAL,IRC2,MSI,OHM, SOA
	Resistance	Power	Char.	Term.	Res. Tol./	Level 1	Level 2	
Part Number	Value (Ohms)	Rating (mW)	(^)	Type (@)	Multiplier (#)	FRL (&)	FRL (&)	Manufacturer
D55342^07@374#&	374	125 (char. E, H) or 250 (char. K, M)	E, H, K, M	B, C, W	D	S, T	P, R	DAL,IRC2,MSI,OHM, SOA
D55342^07@383#&	383	125 (char. E, H) or 250 (char. K, M)	E, H, K, M	B, C, W	D	S, T	P, R	DAL,IRC2,MSI,OHM, SOA
D55342^07@390#&	390	125 (char. E, H) or 250 (char. K, M)	E, H, K, M	B, C, W	G, J, M	S, T	P, R	DAL,IRC2,MSI,OHM, SOA
D55342^07@392#&	392	125 (char. E, H) or 250 (char. K, M)	E, H, K, M	B, C, W	D	S, T	P, R	DAL,IRC2,MSI,OHM, SOA
D55342^07@402#&	402	125 (char. E, H) or 250 (char. K, M)	E, H, K, M	B, C, W	D	S, T	P, R	DAL,IRC2,MSI,OHM, SOA
D55342^07@412#&	412	125 (char. E, H) or 250 (char. K, M)	E, H, K, M	B, C, W	D	S, T	P, R	DAL,IRC2,MSI,OHM, SOA
D55342^07@422#&	422	125 (char. E, H) or 250 (char. K, M)	E, H, K, M	B, C, W	D	S, T	P, R	DAL,IRC2,MSI,OHM, SOA
D55342^07@430#&	430	125 (char. E, H) or 250 (char. K, M)	E, H, K, M	B, C, W	G, J	S, T	P, R	DAL,IRC2,MSI,OHM, SOA
D55342^07@432#&	432	125 (char. E, H) or 250 (char. K, M)	E, H, K, M	B, C, W	D	S, T	P, R	DAL,IRC2,MSI,OHM, SOA
	Resistance	Power	Char.	Term.	Res. Tol./	Level 1	Level 2	
Part Number	Value (Ohms)	Rating (mW)	(^)	Type (@)	Multiplier (#)	FRL (&)	FRL (&)	Manufacturer
D55342^07@442#&	442	125 (char. E, H) or 250 (char. K, M)	E, H, K, M	B, C, W	D	S, T	P, R	DAL,IRC2,MSI,OHM, SOA
D55342^07@453#&	453	125 (char. E, H) or 250 (char. K, M)	E, H, K, M	B, C, W	D	S, T	P, R	DAL,IRC2,MSI,OHM, SOA
D55342^07@464#&	464	125 (char. E, H) or 250 (char. K, M)	E, H, K, M	B, C, W	D	S, T	P, R	DAL,IRC2,MSI,OHM, SOA
D55342^07@470#&	470	125 (char. E, H) or 250 (char. K, M)	E, H, K, M	B, C, W	G, J, M	S, T	P, R	DAL,IRC2,MSI,OHM, SOA
D55342^07@475#&	475	125 (char. E, H) or 250 (char. K, M)	E, H, K, M	B, C, W	D	S, T	P, R	DAL,IRC2,MSI,OHM, SOA
D55342^07@487#&	487	125 (char. E, H) or 250 (char. K, M)	E, H, K, M	B, C, W	D	S, T	P, R	DAL,IRC2,MSI,OHM, SOA
D55342^07@499#&	499	125 (char. E, H) or 250 (char. K, M)	E, H, K, M	B, C, W	D	S, T	P, R	DAL,IRC2,MSI,OHM, SOA
D55342^07@510#&	510	125 (char. E, H) or 250 (char. K, M)	E, H, K, M	B, C, W	G, J	S, T	P, R	DAL,IRC2,MSI,OHM, SOA
D55342^07@511#&	511	125 (char. E, H) or 250 (char. K, M)	E, H, K, M	B, C, W	D	S, T	P, R	DAL,IRC2,MSI,OHM, SOA
	Resistance	Power	Char.	Term.	Res. Tol./	Level 1	Level 2	
Part Number	Value (Ohms)	Rating (mW)	(^)	Type (@)	Multiplier (#)	FRL (&)	FRL (&)	Manufacturer
D55342^07@523#&	523	125 (char. E, H) or 250 (char. K, M)	E, H, K, M	B, C, W	D	S, T	P, R	DAL,IRC2,MSI,OHM, SOA
D55342^07@536#&	536	125 (char. E, H) or 250 (char. K, M)	E, H, K, M	B, C, W	D	S, T	P, R	DAL,IRC2,MSI,OHM, SOA
D55342^07@549#&	549	125 (char. E, H) or 250 (char. K, M)	E, H, K, M	B, C, W	D	S, T	P, R	DAL,IRC2,MSI,OHM, SOA
D55342^07@560#&	560	125 (char. E, H) or 250 (char. K, M)	E, H, K, M	B, C, W	G, J, M	S, T	P, R	DAL,IRC2,MSI,OHM, SOA

D55342^07@562#&	562	125 (char. E, H) or 250 (char. K, M)	E, H, K, M	B, C, W	D	S, T	P, R	DAL,IRC2,MSI,OHM, SOA
D55342^07@576#&	576	125 (char. E, H) or 250 (char. K, M)	E, H, K, M	B, C, W	D	S, T	P, R	DAL,IRC2,MSI,OHM, SOA
D55342^07@590#&	590	125 (char. E, H) or 250 (char. K, M)	E, H, K, M	B, C, W	D	S, T	P, R	DAL,IRC2,MSI,OHM, SOA
D55342^07@604#&	604	125 (char. E, H) or 250 (char. K, M)	E, H, K, M	B, C, W	D	S, T	P, R	DAL,IRC2,MSI,OHM, SOA
D55342^07@619#&	619	125 (char. E, H) or 250 (char. K, M)	E, H, K, M	B, C, W	D	S, T	P, R	DAL,IRC2,MSI,OHM, SOA
	Resistance	Power	Char.	Term.	Res. Tol./	Level 1	Level 2	
Part Number	Value (Ohms)	Rating (mW)	(^)	Type (@)	Multiplier (#)	FRL (&)	FRL (&)	Manufacturer
D55342^07@620#&	620	125 (char. E, H) or 250 (char. K, M)	E, H, K, M	B, C, W	G, J	S, T	P, R	DAL,IRC2,MSI,OHM, SOA
D55342^07@634#&	634	125 (char. E, H) or 250 (char. K, M)	E, H, K, M	B, C, W	D	S, T	P, R	DAL,IRC2,MSI,OHM, SOA
D55342^07@649#&	649	125 (char. E, H) or 250 (char. K, M)	E, H, K, M	B, C, W	D	S, T	P, R	DAL,IRC2,MSI,OHM, SOA
D55342^07@665#&	665	125 (char. E, H) or 250 (char. K, M)	E, H, K, M	B, C, W	D	S, T	P, R	DAL,IRC2,MSI,OHM, SOA
D55342^07@680#&	680	125 (char. E, H) or 250 (char. K, M)	E, H, K, M	B, C, W	G, J, M	S, T	P, R	DAL,IRC2,MSI,OHM, SOA
D55342^07@681#&	681	125 (char. E, H) or 250 (char. K, M)	E, H, K, M	B, C, W	D	S, T	P, R	DAL,IRC2,MSI,OHM, SOA
D55342^07@698#&	698	125 (char. E, H) or 250 (char. K, M)	E, H, K, M	B, C, W	D	S, T	P, R	DAL,IRC2,MSI,OHM, SOA
D55342^07@715#&	715	125 (char. E, H) or 250 (char. K, M)	E, H, K, M	B, C, W	D	S, T	P, R	DAL,IRC2,MSI,OHM, SOA
D55342^07@732#&	732	125 (char. E, H) or 250 (char. K, M)	E, H, K, M	B, C, W	D	S, T	P, R	DAL,IRC2,MSI,OHM, SOA
	Resistance	Power	Char.	Term.	Res. Tol./	Level 1	Level 2	
Part Number	Value (Ohms)	Rating (mW)	(^)	Type (@)	Multiplier (#)	FRL (&)	FRL (&)	Manufacturer
D55342^07@750#&	750	125 (char. E, H) or 250 (char. K, M)	E, H, K, M	B, C, W	D, G, J	S, T	P, R	DAL,IRC2,MSI,OHM, SOA
D55342^07@768#&	768	125 (char. E, H) or 250 (char. K, M)	E, H, K, M	B, C, W	D	S, T	P, R	DAL,IRC2,MSI,OHM, SOA
D55342^07@787#&	787	125 (char. E, H) or 250 (char. K, M)	E, H, K, M	B, C, W	D	S, T	P, R	DAL,IRC2,MSI,OHM, SOA
D55342^07@806#&	806	125 (char. E, H) or 250 (char. K, M)	E, H, K, M	B, C, W	D	S, T	P, R	DAL,IRC2,MSI,OHM, SOA
D55342^07@820#&	820	125 (char. E, H) or 250 (char. K, M)	E, H, K, M	B, C, W	G, J, M	S, T	P, R	DAL,IRC2,MSI,OHM, SOA
D55342^07@825#&	825	125 (char. E, H) or 250 (char. K, M)	E, H, K, M	B, C, W	D	S, T	P, R	DAL,IRC2,MSI,OHM, SOA
D55342^07@845#&	845	125 (char. E, H) or 250 (char. K, M)	E, H, K, M	B, C, W	D	S, T	P, R	DAL,IRC2,MSI,OHM, SOA
D55342^07@866#&	866	125 (char. E, H) or 250 (char. K, M)	E, H, K, M	B, C, W	D	S, T	P, R	DAL,IRC2,MSI,OHM, SOA
D55342^07@887#&	887	125 (char. E, H) or 250 (char. K, M)	E, H, K, M	B, C, W	D	S, T	P, R	DAL,IRC2,MSI,OHM, SOA
	Resistance	Power	Char.	Term.	Res. Tol./	Level 1	Level 2	
Part Number	Value (Ohms)	Rating (mW)	(^)	Type (@)	Multiplier (#)	FRL (&)	FRL (&)	Manufacturer
D55342^07@909#&	909	125 (char. E, H) or 250 (char. K, M)	E, H, K, M	B, C, W	D	S, T	P, R	DAL,IRC2,MSI,OHM, SOA
D55342^07@910#&	910	125 (char. E, H) or 250 (char. K, M)	E, H, K, M	B, C, W	G, J	S, T	P, R	DAL,IRC2,MSI,OHM, SOA
D55342^07@931#&	931	125 (char. E, H) or 250 (char. K, M)	E, H, K, M	B, C, W	D	S, T	P, R	DAL,IRC2,MSI,OHM, SOA
D55342^07@953#&	953	125 (char. E, H) or 250 (char. K, M)	E, H, K, M	B, C, W	D	S, T	P, R	DAL,IRC2,MSI,OHM, SOA
D55342^07@976#&	976	125 (char. E, H) or 250 (char. K, M)	E, H, K, M	B, C, W	D	S, T	P, R	DAL,IRC2,MSI,OHM, SOA
	Resistance	Power	Char.	Term.	Res. Tol./	Level 1	Level 2	
Part Number	Value (Ohms)	Rating (mW)	(^)	Type (@)	Multiplier (#)	FRL (&)	FRL (&)	Manufacturer

MIL-PRF-55342/7 (RM1206) Film Chip Resistors: 1,000 Ohms Through 9,760 Ohms

	Resistance	Power	Char.	Term.	Res. Tol./	Level 1	Level 2	
Part Number	Value (Ohms)	Rating (mW)	(^)	Type (@)	Multiplier (#)	FRL (&)	FRL (&)	Manufacturer
D55342^07@1#00&	1,000	125 (char. E, H) or 250 (char. K, M)	E, H, K, M	B, C, W	E, H, K, N	S, T	P, R	DAL,IRC2,MSI,OHM, SOA
D55342^07@1#02&	1,020	125 (char. E, H) or 250 (char. K, M)	E, H, K, M	B, C, W	E	S, T	P, R	DAL,IRC2,MSI,OHM, SOA
D55342^07@1#05&	1,050	125 (char. E, H) or 250 (char. K, M)	E, H, K, M	B, C, W	E	S, T	P, R	DAL,IRC2,MSI,OHM, SOA
D55342^07@1#07&	1,070	125 (char. E, H) or 250 (char. K, M)	E, H, K, M	B, C, W	E	S, T	P, R	DAL,IRC2,MSI,OHM, SOA

D55342^07@1#10&	1,100	125 (char. E, H) or 250 (char. K, M)	E, H, K, M	B, C, W	E, H, K	S, T	P, R	DAL,IRC2,MSI,OHM, SOA
D55342^07@1#13&	1,130	125 (char. E, H) or 250 (char. K, M)	E, H, K, M	B, C, W	E	S, T	P, R	DAL,IRC2,MSI,OHM, SOA
D55342^07@1#15&	1,150	125 (char. E, H) or 250 (char. K, M)	E, H, K, M	B, C, W	E	S, T	P, R	DAL,IRC2,MSI,OHM, SOA
D55342^07@1#18&	1,180	125 (char. E, H) or 250 (char. K, M)	E, H, K, M	B, C, W	E	S, T	P, R	DAL,IRC2,MSI,OHM, SOA
D55342^07@1#20&	1,200	125 (char. E, H) or 250 (char. K, M)	E, H, K, M	B, C, W	H, K, N	S, T	P, R	DAL,IRC2,MSI,OHM, SOA
	Resistance	Power	Char.	Term.	Res. Tol./	Level 1	Level 2	
Part Number	Value (Ohms)	Rating (mW)	(^)	Type (@)	Multiplier (#)	FRL (&)	FRL (&)	Manufacturer
D55342^07@1#21&	1,210	125 (char. E, H) or 250 (char. K, M)	E, H, K, M	B, C, W	E	S, T	P, R	DAL,IRC2,MSI,OHM, SOA
D55342^07@1#24&	1,240	125 (char. E, H) or 250 (char. K, M)	E, H, K, M	B, C, W	E	S, T	P, R	DAL,IRC2,MSI,OHM, SOA
D55342^07@1#27&	1,270	125 (char. E, H) or 250 (char. K, M)	E, H, K, M	B, C, W	E	S, T	P, R	DAL,IRC2,MSI,OHM, SOA
D55342^07@1#30&	1,300	125 (char. E, H) or 250 (char. K, M)	E, H, K, M	B, C, W	E, H, K	S, T	P, R	DAL,IRC2,MSI,OHM, SOA
D55342^07@1#33&	1,330	125 (char. E, H) or 250 (char. K, M)	E, H, K, M	B, C, W	E	S, T	P, R	DAL,IRC2,MSI,OHM, SOA
D55342^07@1#37&	1,370	125 (char. E, H) or 250 (char. K, M)	E, H, K, M	B, C, W	E	S, T	P, R	DAL,IRC2,MSI,OHM, SOA
D55342^07@1#40&	1,400	125 (char. E, H) or 250 (char. K, M)	E, H, K, M	B, C, W	E	S, T	P, R	DAL,IRC2,MSI,OHM, SOA
D55342^07@1#43&	1,430	125 (char. E, H) or 250 (char. K, M)	E, H, K, M	B, C, W	E	S, T	P, R	DAL,IRC2,MSI,OHM, SOA
D55342^07@1#47&	1,470	125 (char. E, H) or 250 (char. K, M)	E, H, K, M	B, C, W	E	S, T	P, R	DAL,IRC2,MSI,OHM, SOA
	Resistance	Power	Char.	Term.	Res. Tol./	Level 1	Level 2	
Part Number	Value (Ohms)	Rating (mW)	(^)	Type (@)	Multiplier (#)	FRL (&)	FRL (&)	Manufacturer
D55342^07@1#50&	1,500	125 (char. E, H) or 250 (char. K, M)	E, H, K, M	B, C, W	E, H, K, N	S, T	P, R	DAL,IRC2,MSI,OHM, SOA
D55342^07@1#54&	1,540	125 (char. E, H) or 250 (char. K, M)	E, H, K, M	B, C, W	E	S, T	P, R	DAL,IRC2,MSI,OHM, SOA
D55342^07@1#58&	1,580	125 (char. E, H) or 250 (char. K, M)	E, H, K, M	B, C, W	E	S, T	P, R	DAL,IRC2,MSI,OHM, SOA
D55342^07@1#60&	1,600	125 (char. E, H) or 250 (char. K, M)	E, H, K, M	B, C, W	H, K	S, T	P, R	DAL,IRC2,MSI,OHM, SOA
D55342^07@1#62&	1,620	125 (char. E, H) or 250 (char. K, M)	E, H, K, M	B, C, W	E	S, T	P, R	DAL,IRC2,MSI,OHM, SOA
D55342^07@1#65&	1,650	125 (char. E, H) or 250 (char. K, M)	E, H, K, M	B, C, W	E	S, T	P, R	DAL,IRC2,MSI,OHM, SOA
D55342^07@1#69&	1,690	125 (char. E, H) or 250 (char. K, M)	E, H, K, M	B, C, W	E	S, T	P, R	DAL,IRC2,MSI,OHM, SOA
D55342^07@1#74&	1,740	125 (char. E, H) or 250 (char. K, M)	E, H, K, M	B, C, W	E	S, T	P, R	DAL,IRC2,MSI,OHM, SOA
D55342^07@1#78&	1,780	125 (char. E, H) or 250 (char. K, M)	E, H, K, M	B, C, W	E	S, T	P, R	DAL,IRC2,MSI,OHM, SOA
	Resistance	Power	Char.	Term.	Res. Tol./	Level 1	Level 2	
Part Number	Value (Ohms)	Rating (mW)	(^)	Type (@)	Multiplier (#)	FRL (&)	FRL (&)	Manufacturer
D55342^07@1#80&	1,800	125 (char. E, H) or 250 (char. K, M)	E, H, K, M	B, C, W	H, K, N	S, T	P, R	DAL,IRC2,MSI,OHM, SOA
D55342^07@1#82&	1,820	125 (char. E, H) or 250 (char. K, M)	E, H, K, M	B, C, W	E	S, T	P, R	DAL,IRC2,MSI,OHM, SOA
D55342^07@1#87&	1,870	125 (char. E, H) or 250 (char. K, M)	E, H, K, M	B, C, W	E	S, T	P, R	DAL,IRC2,MSI,OHM, SOA
D55342^07@1#91&	1,910	125 (char. E, H) or 250 (char. K, M)	E, H, K, M	B, C, W	E	S, T	P, R	DAL,IRC2,MSI,OHM, SOA
D55342^07@1#96&	1,960	125 (char. E, H) or 250 (char. K, M)	E, H, K, M	B, C, W	E	S, T	P, R	DAL,IRC2,MSI,OHM, SOA
D55342^07@2#00&	2,000	125 (char. E, H) or 250 (char. K, M)	E, H, K, M	B, C, W	E, H, K, N	S, T	P, R	DAL,IRC2,MSI,OHM, SOA
D55342^07@2#05&	2,050	125 (char. E, H) or 250 (char. K, M)	E, H, K, M	B, C, W	E	S, T	P, R	DAL,IRC2,MSI,OHM, SOA
D55342^07@2#10&	2,100	125 (char. E, H) or 250 (char. K, M)	E, H, K, M	B, C, W	E	S, T	P, R	DAL,IRC2,MSI,OHM, SOA
D55342^07@2#15&	2,150	125 (char. E, H) or 250 (char. K, M)	E, H, K, M	B, C, W	E	S, T	P, R	DAL,IRC2,MSI,OHM, SOA
	Resistance	Power	Char.	Term.	Res. Tol./	Level 1	Level 2	
Part Number	Value (Ohms)	Rating (mW)	(^)	Type (@)	Multiplier (#)	FRL (&)	FRL (&)	Manufacturer
D55342^07@2#20&	2,200	125 (char. E, H) or 250 (char. K, M)	E, H, K, M	B, C, W	H, K, N	S, T	P, R	DAL,IRC2,MSI,OHM, SOA
D55342^07@2#21&	2,210	125 (char. E, H) or 250 (char. K, M)	E, H, K, M	B, C, W	E	S, T	P, R	DAL,IRC2,MSI,OHM, SOA
D55342^07@2#26&	2,260	125 (char. E, H) or 250 (char. K, M)	E, H, K, M	B, C, W	E	S, T	P, R	DAL,IRC2,MSI,OHM, SOA
D55342^07@2#32&	2,320	125 (char. E, H) or 250 (char. K, M)	E, H, K, M	B, C, W	E	S, T	P, R	DAL,IRC2,MSI,OHM, SOA
D55342^07@2#37&	2,370	125 (char. E, H) or 250 (char. K, M)	E, H, K, M	B, C, W	E	S, T	P, R	DAL,IRC2,MSI,OHM, SOA
D55342^07@2#40&	2,400	125 (char. E, H) or 250 (char. K, M)	E, H, K, M	B, C, W	H, K	S, T	P, R	DAL,IRC2,MSI,OHM, SOA
D55342^07@2#43&	2,430	125 (char. E, H) or 250 (char. K, M)	E, H, K, M	B, C, W	E	S, T	P, R	DAL,IRC2,MSI,OHM, SOA

D55342^07@2#49&	2,490	125 (char. E, H) or 250 (char. K, M)	E, H, K, M	B, C, W	E	S, T	P, R	DAL,IRC2,MSI,OHM, SOA
D55342^07@2#55&	2,550	125 (char. E, H) or 250 (char. K, M)	E, H, K, M	B, C, W	E	S, T	P, R	DAL,IRC2,MSI,OHM, SOA
	Resistance	Power	Char.	Term.	Res. Tol./	Level 1	Level 2	
Part Number	Value (Ohms)	Rating (mW)	(^)	Type (@)	Multiplier (#)	FRL (&)	FRL (&)	Manufacturer
D55342^07@2#61&	2,610	125 (char. E, H) or 250 (char. K, M)	E, H, K, M	B, C, W	E	S, T	P, R	DAL,IRC2,MSI,OHM, SOA
D55342^07@2#67&	2,670	125 (char. E, H) or 250 (char. K, M)	E, H, K, M	B, C, W	E	S, T	P, R	DAL,IRC2,MSI,OHM, SOA
D55342^07@2#70&	2,700	125 (char. E, H) or 250 (char. K, M)	E, H, K, M	B, C, W	H, K, N	S, T	P, R	DAL,IRC2,MSI,OHM, SOA
D55342^07@2#74&	2,740	125 (char. E, H) or 250 (char. K, M)	E, H, K, M	B, C, W	E	S, T	P, R	DAL,IRC2,MSI,OHM, SOA
D55342^07@2#80&	2,800	125 (char. E, H) or 250 (char. K, M)	E, H, K, M	B, C, W	E	S, T	P, R	DAL,IRC2,MSI,OHM, SOA
D55342^07@2#87&	2,870	125 (char. E, H) or 250 (char. K, M)	E, H, K, M	B, C, W	E	S, T	P, R	DAL,IRC2,MSI,OHM, SOA
D55342^07@2#94&	2,940	125 (char. E, H) or 250 (char. K, M)	E, H, K, M	B, C, W	E	S, T	P, R	DAL,IRC2,MSI,OHM, SOA
D55342^07@3#00&	3,000	125 (char. E, H) or 250 (char. K, M)	E, H, K, M	B, C, W	H, K	S, T	P, R	DAL,IRC2,MSI,OHM, SOA
D55342^07@3#01&	3,010	125 (char. E, H) or 250 (char. K, M)	E, H, K, M	B, C, W	E	S, T	P, R	DAL,IRC2,MSI,OHM, SOA
	Resistance	Power	Char.	Term.	Res. Tol./	Level 1	Level 2	
Part Number	Value (Ohms)	Rating (mW)	(^)	Type (@)	Multiplier (#)	FRL (&)	FRL (&)	Manufacturer
D55342^07@3#09&	3,090	125 (char. E, H) or 250 (char. K, M)	E, H, K, M	B, C, W	E	S, T	P, R	DAL,IRC2,MSI,OHM, SOA
D55342^07@3#16&	3,160	125 (char. E, H) or 250 (char. K, M)	E, H, K, M	B, C, W	E	S, T	P, R	DAL,IRC2,MSI,OHM, SOA
D55342^07@3#24&	3,240	125 (char. E, H) or 250 (char. K, M)	E, H, K, M	B, C, W	E	S, T	P, R	DAL,IRC2,MSI,OHM, SOA
D55342^07@3#30&	3,300	125 (char. E, H) or 250 (char. K, M)	E, H, K, M	B, C, W	H, K, N	S, T	P, R	DAL,IRC2,MSI,OHM, SOA
D55342^07@3#32&	3,320	125 (char. E, H) or 250 (char. K, M)	E, H, K, M	B, C, W	E	S, T	P, R	DAL,IRC2,MSI,OHM, SOA
D55342^07@3#40&	3,400	125 (char. E, H) or 250 (char. K, M)	E, H, K, M	B, C, W	E	S, T	P, R	DAL,IRC2,MSI,OHM, SOA
D55342^07@3#48&	3,480	125 (char. E, H) or 250 (char. K, M)	E, H, K, M	B, C, W	E	S, T	P, R	DAL,IRC2,MSI,OHM, SOA
D55342^07@3#57&	3,570	125 (char. E, H) or 250 (char. K, M)	E, H, K, M	B, C, W	E	S, T	P, R	DAL,IRC2,MSI,OHM, SOA
D55342^07@3#60&	3,600	125 (char. E, H) or 250 (char. K, M)	E, H, K, M	B, C, W	H, K	S, T	P, R	DAL,IRC2,MSI,OHM, SOA
	Resistance	Power	Char.	Term.	Res. Tol./	Level 1	Level 2	
Part Number	Value (Ohms)	Rating (mW)	(^)	Type (@)	Multiplier (#)	FRL (&)	FRL (&)	Manufacturer
D55342^07@3#65&	3,650	125 (char. E, H) or 250 (char. K, M)	E, H, K, M	B, C, W	E	S, T	P, R	DAL,IRC2,MSI,OHM, SOA
D55342^07@3#74&	3,740	125 (char. E, H) or 250 (char. K, M)	E, H, K, M	B, C, W	E	S, T	P, R	DAL,IRC2,MSI,OHM, SOA
D55342^07@3#83&	3,830	125 (char. E, H) or 250 (char. K, M)	E, H, K, M	B, C, W	E	S, T	P, R	DAL,IRC2,MSI,OHM, SOA
D55342^07@3#90&	3,900	125 (char. E, H) or 250 (char. K, M)	E, H, K, M	B, C, W	H, K, N	S, T	P, R	DAL,IRC2,MSI,OHM, SOA
D55342^07@3#92&	3,920	125 (char. E, H) or 250 (char. K, M)	E, H, K, M	B, C, W	E	S, T	P, R	DAL,IRC2,MSI,OHM, SOA
D55342^07@4#02&	4,020	125 (char. E, H) or 250 (char. K, M)	E, H, K, M	B, C, W	E	S, T	P, R	DAL,IRC2,MSI,OHM, SOA
D55342^07@4#12&	4,120	125 (char. E, H) or 250 (char. K, M)	E, H, K, M	B, C, W	E	S, T	P, R	DAL,IRC2,MSI,OHM, SOA
D55342^07@4#22&	4,220	125 (char. E, H) or 250 (char. K, M)	E, H, K, M	B, C, W	E	S, T	P, R	DAL,IRC2,MSI,OHM, SOA
D55342^07@4#30&	4,300	125 (char. E, H) or 250 (char. K, M)	E, H, K, M	B, C, W	H, K	S, T	P, R	DAL,IRC2,MSI,OHM, SOA
	Resistance	Power	Char.	Term.	Res. Tol./	Level 1	Level 2	
Part Number	Value (Ohms)	Rating (mW)	(^)	Type (@)	Multiplier (#)	FRL (&)	FRL (&)	Manufacturer
D55342^07@4#32&	4,320	125 (char. E, H) or 250 (char. K, M)	E, H, K, M	B, C, W	E	S, T	P, R	DAL,IRC2,MSI,OHM, SOA
D55342^07@4#42&	4,420	125 (char. E, H) or 250 (char. K, M)	E, H, K, M	B, C, W	E	S, T	P, R	DAL,IRC2,MSI,OHM, SOA
D55342^07@4#53&	4,530	125 (char. E, H) or 250 (char. K, M)	E, H, K, M	B, C, W	E	S, T	P, R	DAL,IRC2,MSI,OHM, SOA
D55342^07@4#64&	4,640	125 (char. E, H) or 250 (char. K, M)	E, H, K, M	B, C, W	E	S, T	P, R	DAL,IRC2,MSI,OHM, SOA
D55342^07@4#70&	4,700	125 (char. E, H) or 250 (char. K, M)	E, H, K, M	B, C, W	H, K, N	S, T	P, R	DAL,IRC2,MSI,OHM, SOA
D55342^07@4#75&	4,750	125 (char. E, H) or 250 (char. K, M)	E, H, K, M	B, C, W	E	S, T	P, R	DAL,IRC2,MSI,OHM, SOA
D55342^07@4#87&	4,870	125 (char. E, H) or 250 (char. K, M)	E, H, K, M	B, C, W	E	S, T	P, R	DAL,IRC2,MSI,OHM, SOA
D55342^07@4#99&	4,990	125 (char. E, H) or 250 (char. K, M)	E, H, K, M	B, C, W	E	S, T	P, R	DAL,IRC2,MSI,OHM, SOA
D55342^07@5#10&	5,100	125 (char. E, H) or 250 (char. K, M)	E, H, K, M	B, C, W	H, K	S, T	P, R	DAL,IRC2,MSI,OHM, SOA
	Resistance	Power	Char.	Term.	Res. Tol./	Level 1	Level 2	

Part Number	Value (Ohms)	Rating (mW)	(^)	Type (@)	Multiplier (#)	FRL (&)	FRL (&)	Manufacturer
D55342^07@5#11&	5,110	125 (char. E, H) or 250 (char. K, M)	E, H, K, M	B, C, W	E	S, T	P, R	DAL,IRC2,MSI,OHM, SOA
D55342^07@5#23&	5,230	125 (char. E, H) or 250 (char. K, M)	E, H, K, M	B, C, W	E	S, T	P, R	DAL,IRC2,MSI,OHM, SOA
D55342^07@5#36&	5,360	125 (char. E, H) or 250 (char. K, M)	E, H, K, M	B, C, W	E	S, T	P, R	DAL,IRC2,MSI,OHM, SOA
D55342^07@5#49&	5,490	125 (char. E, H) or 250 (char. K, M)	E, H, K, M	B, C, W	E	S, T	P, R	DAL,IRC2,MSI,OHM, SOA
D55342^07@5#60&	5,600	125 (char. E, H) or 250 (char. K, M)	E, H, K, M	B, C, W	H, K, N	S, T	P, R	DAL,IRC2,MSI,OHM, SOA
D55342^07@5#62&	5,620	125 (char. E, H) or 250 (char. K, M)	E, H, K, M	B, C, W	E	S, T	P, R	DAL,IRC2,MSI,OHM, SOA
D55342^07@5#76&	5,760	125 (char. E, H) or 250 (char. K, M)	E, H, K, M	B, C, W	E	S, T	P, R	DAL,IRC2,MSI,OHM, SOA
D55342^07@5#90&	5,900	125 (char. E, H) or 250 (char. K, M)	E, H, K, M	B, C, W	E	S, T	P, R	DAL,IRC2,MSI,OHM, SOA
D55342^07@6#04&	6,040	125 (char. E, H) or 250 (char. K, M)	E, H, K, M	B, C, W	E	S, T	P, R	DAL,IRC2,MSI,OHM, SOA
	Resistance	Power	Char.	Term.	Res. Tol./	Level 1	Level 2	
Part Number	Value (Ohms)	Rating (mW)	(^)	Type (@)	Multiplier (#)	FRL (&)	FRL (&)	Manufacturer
D55342^07@6#19&	6,190	125 (char. E, H) or 250 (char. K, M)	E, H, K, M	B, C, W	E	S, T	P, R	DAL,IRC2,MSI,OHM, SOA
D55342^07@6#20&	6,200	125 (char. E, H) or 250 (char. K, M)	E, H, K, M	B, C, W	H, K	S, T	P, R	DAL,IRC2,MSI,OHM, SOA
D55342^07@6#34&	6,340	125 (char. E, H) or 250 (char. K, M)	E, H, K, M	B, C, W	E	S, T	P, R	DAL,IRC2,MSI,OHM, SOA
D55342^07@6#49&	6,490	125 (char. E, H) or 250 (char. K, M)	E, H, K, M	B, C, W	E	S, T	P, R	DAL,IRC2,MSI,OHM, SOA
D55342^07@6#65&	6,650	125 (char. E, H) or 250 (char. K, M)	E, H, K, M	B, C, W	E	S, T	P, R	DAL,IRC2,MSI,OHM, SOA
D55342^07@6#80&	6,800	125 (char. E, H) or 250 (char. K, M)	E, H, K, M	B, C, W	H, K, N	S, T	P, R	DAL,IRC2,MSI,OHM, SOA
D55342^07@6#81&	6,810	125 (char. E, H) or 250 (char. K, M)	E, H, K, M	B, C, W	E	S, T	P, R	DAL,IRC2,MSI,OHM, SOA
D55342^07@6#98&	6,980	125 (char. E, H) or 250 (char. K, M)	E, H, K, M	B, C, W	E	S, T	P, R	DAL,IRC2,MSI,OHM, SOA
D55342^07@7#15&	7,150	125 (char. E, H) or 250 (char. K, M)	E, H, K, M	B, C, W	E	S, T	P, R	DAL,IRC2,MSI,OHM, SOA
	Resistance	Power	Char.	Term.	Res. Tol./	Level 1	Level 2	
Part Number	Value (Ohms)	Rating (mW)	(^)	Type (@)	Multiplier (#)	FRL (&)	FRL (&)	Manufacturer
D55342^07@7#32&	7,320	125 (char. E, H) or 250 (char. K, M)	E, H, K, M	B, C, W	E	S, T	P, R	DAL,IRC2,MSI,OHM, SOA
D55342^07@7#50&	7,500	125 (char. E, H) or 250 (char. K, M)	E, H, K, M	B, C, W	E, H, K	S, T	P, R	DAL,IRC2,MSI,OHM, SOA
D55342^07@7#68&	7,680	125 (char. E, H) or 250 (char. K, M)	E, H, K, M	B, C, W	E	S, T	P, R	DAL,IRC2,MSI,OHM, SOA
D55342^07@7#87&	7,870	125 (char. E, H) or 250 (char. K, M)	E, H, K, M	B, C, W	E	S, T	P, R	DAL,IRC2,MSI,OHM, SOA
D55342^07@8#06&	8,060	125 (char. E, H) or 250 (char. K, M)	E, H, K, M	B, C, W	E	S, T	P, R	DAL,IRC2,MSI,OHM, SOA
D55342^07@8#20&	8,200	125 (char. E, H) or 250 (char. K, M)	E, H, K, M	B, C, W	H, K, N	S, T	P, R	DAL,IRC2,MSI,OHM, SOA
D55342^07@8#25&	8,250	125 (char. E, H) or 250 (char. K, M)	E, H, K, M	B, C, W	E	S, T	P, R	DAL,IRC2,MSI,OHM, SOA
D55342^07@8#45&	8,450	125 (char. E, H) or 250 (char. K, M)	E, H, K, M	B, C, W	E	S, T	P, R	DAL,IRC2,MSI,OHM, SOA
D55342^07@8#66&	8,660	125 (char. E, H) or 250 (char. K, M)	E, H, K, M	B, C, W	E	S, T	P, R	DAL,IRC2,MSI,OHM, SOA
	Resistance	Power	Char.	Term.	Res. Tol./	Level 1	Level 2	
Part Number	Value (Ohms)	Rating (mW)	(^)	Type (@)	Multiplier (#)	FRL (&)	FRL (&)	Manufacturer
D55342^07@8#87&	8,870	125 (char. E, H) or 250 (char. K, M)	E, H, K, M	B, C, W	E	S, T	P, R	DAL,IRC2,MSI,OHM, SOA
D55342^07@9#09&	9,090	125 (char. E, H) or 250 (char. K, M)	E, H, K, M	B, C, W	E	S, T	P, R	DAL,IRC2,MSI,OHM, SOA
D55342^07@9#10&	9,100	125 (char. E, H) or 250 (char. K, M)	E, H, K, M	B, C, W	H, K	S, T	P, R	DAL,IRC2,MSI,OHM, SOA
D55342^07@9#31&	9,310	125 (char. E, H) or 250 (char. K, M)	E, H, K, M	B, C, W	E	S, T	P, R	DAL,IRC2,MSI,OHM, SOA
D55342^07@9#53&	9,530	125 (char. E, H) or 250 (char. K, M)	E, H, K, M	B, C, W	E	S, T	P, R	DAL,IRC2,MSI,OHM, SOA
D55342^07@9#76&	9,760	125 (char. E, H) or 250 (char. K, M)	E, H, K, M	B, C, W	E	S, T	P, R	DAL,IRC2,MSI,OHM, SOA
	Resistance	Power	Char.	Term.	Res. Tol./	Level 1	Level 2	
Part Number	Value (Ohms)	Rating (mW)	(^)	Type (@)	Multiplier (#)	FRL (&)	FRL (&)	Manufacturer

MIL-PRF-55342/7 (RM1206) Film Chip Resistors: 10,000 Ohms Through 97,600 Ohms

	Resistance	Power	Char.	Term.	Res. Tol./	Level 1	Level 2	
Part Number	Value (Ohms)	Rating (mW)	(^)	Type (@)	Multiplier (#)	FRL (&)	FRL (&)	Manufacturer
D55342^07@10#0&	10,000	125 (char. E, H) or 250 (char. K, M)	E, H, K, M	B, C, W	E, H, K, N	S, T	P, R	DAL,IRC2,MSI,OHM, SOA
D55342^07@10#2&	10,200	125 (char. E, H) or 250 (char. K, M)	E, H, K, M	B, C, W	E	S, T	P, R	DAL,IRC2,MSI,OHM, SOA
D55342^07@10#5&	10,500	125 (char. E, H) or 250 (char. K, M)	E, H, K, M	B, C, W	E	S, T	P, R	DAL,IRC2,MSI,OHM, SOA
D55342^07@10#7&	10,700	125 (char. E, H) or 250 (char. K, M)	E, H, K, M	B, C, W	E	S, T	P, R	DAL,IRC2,MSI,OHM, SOA
D55342^07@11#0&	11,000	125 (char. E, H) or 250 (char. K, M)	E, H, K, M	B, C, W	E, H, K	S, T	P, R	DAL,IRC2,MSI,OHM, SOA
D55342^07@11#3&	11,300	125 (char. E, H) or 250 (char. K, M)	E, H, K, M	B, C, W	E	S, T	P, R	DAL,IRC2,MSI,OHM, SOA
D55342^07@11#5&	11,500	125 (char. E, H) or 250 (char. K, M)	E, H, K, M	B, C, W	E	S, T	P, R	DAL,IRC2,MSI,OHM, SOA
D55342^07@11#8&	11,800	125 (char. E, H) or 250 (char. K, M)	E, H, K, M	B, C, W	E	S, T	P, R	DAL,IRC2,MSI,OHM, SOA
D55342^07@12#0&	12,000	125 (char. E, H) or 250 (char. K, M)	E, H, K, M	B, C, W	H, K, N	S, T	P, R	DAL,IRC2,MSI,OHM, SOA
	Resistance	Power	Char.	Term.	Res. Tol./	Level 1	Level 2	
Part Number	Value (Ohms)	Rating (mW)	(^)	Type (@)	Multiplier (#)	FRL (&)	FRL (&)	Manufacturer
D55342^07@12#1&	12,100	125 (char. E, H) or 250 (char. K, M)	E, H, K, M	B, C, W	E	S, T	P, R	DAL,IRC2,MSI,OHM, SOA
D55342^07@12#4&	12,400	125 (char. E, H) or 250 (char. K, M)	E, H, K, M	B, C, W	E	S, T	P, R	DAL,IRC2,MSI,OHM, SOA
D55342^07@12#7&	12,700	125 (char. E, H) or 250 (char. K, M)	E, H, K, M	B, C, W	E	S, T	P, R	DAL,IRC2,MSI,OHM, SOA
D55342^07@13#0&	13,000	125 (char. E, H) or 250 (char. K, M)	E, H, K, M	B, C, W	E, H, K	S, T	P, R	DAL,IRC2,MSI,OHM, SOA
D55342^07@13#3&	13,300	125 (char. E, H) or 250 (char. K, M)	E, H, K, M	B, C, W	E	S, T	P, R	DAL,IRC2,MSI,OHM, SOA
D55342^07@13#7&	13,700	125 (char. E, H) or 250 (char. K, M)	E, H, K, M	B, C, W	E	S, T	P, R	DAL,IRC2,MSI,OHM, SOA
D55342^07@14#0&	14,000	125 (char. E, H) or 250 (char. K, M)	E, H, K, M	B, C, W	E	S, T	P, R	DAL,IRC2,MSI,OHM, SOA
D55342^07@14#3&	14,300	125 (char. E, H) or 250 (char. K, M)	E, H, K, M	B, C, W	E	S, T	P, R	DAL,IRC2,MSI,OHM, SOA
D55342^07@14#7&	14,700	125 (char. E, H) or 250 (char. K, M)	E, H, K, M	B, C, W	E	S, T	P, R	DAL,IRC2,MSI,OHM, SOA
	Resistance	Power	Char.	Term.	Res. Tol./	Level 1	Level 2	
Part Number	Value (Ohms)	Rating (mW)	(^)	Type (@)	Multiplier (#)	FRL (&)	FRL (&)	Manufacturer
D55342^07@15#0&	15,000	125 (char. E, H) or 250 (char. K, M)	E, H, K, M	B, C, W	E, H, K, N	S, T	P, R	DAL,IRC2,MSI,OHM, SOA
D55342^07@15#4&	15,400	125 (char. E, H) or 250 (char. K, M)	E, H, K, M	B, C, W	E	S, T	P, R	DAL,IRC2,MSI,OHM, SOA
D55342^07@15#8&	15,800	125 (char. E, H) or 250 (char. K, M)	E, H, K, M	B, C, W	E	S, T	P, R	DAL,IRC2,MSI,OHM, SOA
D55342^07@16#0&	16,000	125 (char. E, H) or 250 (char. K, M)	E, H, K, M	B, C, W	H, K	S, T	P, R	DAL,IRC2,MSI,OHM, SOA
D55342^07@16#2&	16,200	125 (char. E, H) or 250 (char. K, M)	E, H, K, M	B, C, W	E	S, T	P, R	DAL,IRC2,MSI,OHM, SOA
D55342^07@16#5&	16,500	125 (char. E, H) or 250 (char. K, M)	E, H, K, M	B, C, W	E	S, T	P, R	DAL,IRC2,MSI,OHM, SOA
D55342^07@16#9&	16,900	125 (char. E, H) or 250 (char. K, M)	E, H, K, M	B, C, W	E	S, T	P, R	DAL,IRC2,MSI,OHM, SOA
D55342^07@17#4&	17,400	125 (char. E, H) or 250 (char. K, M)	E, H, K, M	B, C, W	E	S, T	P, R	DAL,IRC2,MSI,OHM, SOA
D55342^07@17#8&	17,800	125 (char. E, H) or 250 (char. K, M)	E, H, K, M	B, C, W	E	S, T	P, R	DAL,IRC2,MSI,OHM, SOA
	Resistance	Power	Char.	Term.	Res. Tol./	Level 1	Level 2	
Part Number	Value (Ohms)	Rating (mW)	(^)	Type (@)	Multiplier (#)	FRL (&)	FRL (&)	Manufacturer
D55342^07@18#0&	18,000	125 (char. E, H) or 250 (char. K, M)	E, H, K, M	B, C, W	H, K, N	S, T	P, R	DAL,IRC2,MSI,OHM, SOA
D55342^07@18#2&	18,200	125 (char. E, H) or 250 (char. K, M)	E, H, K, M	B, C, W	E	S, T	P, R	DAL,IRC2,MSI,OHM, SOA
D55342^07@18#7&	18,700	125 (char. E, H) or 250 (char. K, M)	E, H, K, M	B, C, W	E	S, T	P, R	DAL,IRC2,MSI,OHM, SOA
D55342^07@19#1&	19,100	125 (char. E, H) or 250 (char. K, M)	E, H, K, M	B, C, W	E	S, T	P, R	DAL,IRC2,MSI,OHM, SOA
D55342^07@19#6&	19,600	125 (char. E, H) or 250 (char. K, M)	E, H, K, M	B, C, W	E	S, T	P, R	DAL,IRC2,MSI,OHM, SOA
D55342^07@20#0&	20,000	125 (char. E, H) or 250 (char. K, M)	E, H, K, M	B, C, W	E, H, K, N	S, T	P, R	DAL,IRC2,MSI,OHM, SOA
D55342^07@20#5&	20,500	125 (char. E, H) or 250 (char. K, M)	E, H, K, M	B, C, W	E	S, T	P, R	DAL,IRC2,MSI,OHM, SOA
D55342^07@21#0&	21,000	125 (char. E, H) or 250 (char. K, M)	E, H, K, M	B, C, W	E	S, T	P, R	DAL,IRC2,MSI,OHM, SOA
D55342^07@21#5&	21,500	125 (char. E, H) or 250 (char. K, M)	E, H, K, M	B, C, W	E	S, T	P, R	DAL,IRC2,MSI,OHM, SOA
	Resistance	Power	Char.	Term.	Res. Tol./	Level 1	Level 2	
Part Number	Value (Ohms)	Rating (mW)	(^)	Type (@)	Multiplier (#)	FRL (&)	FRL (&)	Manufacturer
D55342^07@22#0&	22,000	125 (char. E, H) or 250 (char. K, M)	E, H, K, M	B, C, W	H, K, N	S, T	P, R	DAL,IRC2,MSI,OHM, SOA

D55342^07@22#1&	22,100	125 (char. E, H) or 250 (char. K, M)	E, H, K, M	B, C, W	E	S, T	P, R	DAL,IRC2,MSI,OHM, SOA
D55342^07@22#6&	22,600	125 (char. E, H) or 250 (char. K, M)	E, H, K, M	B, C, W	E	S, T	P, R	DAL,IRC2,MSI,OHM, SOA
D55342^07@23#2&	23,200	125 (char. E, H) or 250 (char. K, M)	E, H, K, M	B, C, W	E	S, T	P, R	DAL,IRC2,MSI,OHM, SOA
D55342^07@23#7&	23,700	125 (char. E, H) or 250 (char. K, M)	E, H, K, M	B, C, W	E	S, T	P, R	DAL,IRC2,MSI,OHM, SOA
D55342^07@24#0&	24,000	125 (char. E, H) or 250 (char. K, M)	E, H, K, M	B, C, W	H, K	S, T	P, R	DAL,IRC2,MSI,OHM, SOA
D55342^07@24#3&	24,300	125 (char. E, H) or 250 (char. K, M)	E, H, K, M	B, C, W	E	S, T	P, R	DAL,IRC2,MSI,OHM, SOA
D55342^07@24#9&	24,900	125 (char. E, H) or 250 (char. K, M)	E, H, K, M	B, C, W	E	S, T	P, R	DAL,IRC2,MSI,OHM, SOA
D55342^07@25#5&	25,500	125 (char. E, H) or 250 (char. K, M)	E, H, K, M	B, C, W	E	S, T	P, R	DAL,IRC2,MSI,OHM, SOA
	Resistance	Power	Char.	Term.	Res. Tol./	Level 1	Level 2	
Part Number	Value (Ohms)	Rating (mW)	(^)	Type (@)	Multiplier (#)	FRL (&)	FRL (&)	Manufacturer
D55342^07@26#1&	26,100	125 (char. E, H) or 250 (char. K, M)	E, H, K, M	B, C, W	E	S, T	P, R	DAL,IRC2,MSI,OHM, SOA
D55342^07@26#7&	26,700	125 (char. E, H) or 250 (char. K, M)	E, H, K, M	B, C, W	E	S, T	P, R	DAL,IRC2,MSI,OHM, SOA
D55342^07@27#0&	27,000	125 (char. E, H) or 250 (char. K, M)	E, H, K, M	B, C, W	H, K, N	S, T	P, R	DAL,IRC2,MSI,OHM, SOA
D55342^07@27#4&	27,400	125 (char. E, H) or 250 (char. K, M)	E, H, K, M	B, C, W	E	S, T	P, R	DAL,IRC2,MSI,OHM, SOA
D55342^07@28#0&	28,000	125 (char. E, H) or 250 (char. K, M)	E, H, K, M	B, C, W	E	S, T	P, R	DAL,IRC2,MSI,OHM, SOA
D55342^07@28#7&	28,700	125 (char. E, H) or 250 (char. K, M)	E, H, K, M	B, C, W	E	S, T	P, R	DAL,IRC2,MSI,OHM, SOA
D55342^07@29#4&	29,400	125 (char. E, H) or 250 (char. K, M)	E, H, K, M	B, C, W	E	S, T	P, R	DAL,IRC2,MSI,OHM, SOA
D55342^07@30#0&	30,000	125 (char. E, H) or 250 (char. K, M)	E, H, K, M	B, C, W	H, K	S, T	P, R	DAL,IRC2,MSI,OHM, SOA
D55342^07@30#1&	30,100	125 (char. E, H) or 250 (char. K, M)	E, H, K, M	B, C, W	E	S, T	P, R	DAL,IRC2,MSI,OHM, SOA
	Resistance	Power	Char.	Term.	Res. Tol./	Level 1	Level 2	
Part Number	Value (Ohms)	Rating (mW)	(^)	Type (@)	Multiplier (#)	FRL (&)	FRL (&)	Manufacturer
D55342^07@30#9&	30,900	125 (char. E, H) or 250 (char. K, M)	E, H, K, M	B, C, W	E	S, T	P, R	DAL,IRC2,MSI,OHM, SOA
D55342^07@31#6&	31,600	125 (char. E, H) or 250 (char. K, M)	E, H, K, M	B, C, W	E	S, T	P, R	DAL,IRC2,MSI,OHM, SOA
D55342^07@32#4&	32,400	125 (char. E, H) or 250 (char. K, M)	E, H, K, M	B, C, W	E	S, T	P, R	DAL,IRC2,MSI,OHM, SOA
D55342^07@33#0&	33,000	125 (char. E, H) or 250 (char. K, M)	E, H, K, M	B, C, W	H, K, N	S, T	P, R	DAL,IRC2,MSI,OHM, SOA
D55342^07@33#2&	33,200	125 (char. E, H) or 250 (char. K, M)	E, H, K, M	B, C, W	E	S, T	P, R	DAL,IRC2,MSI,OHM, SOA
D55342^07@34#0&	34,000	125 (char. E, H) or 250 (char. K, M)	E, H, K, M	B, C, W	E	S, T	P, R	DAL,IRC2,MSI,OHM, SOA
D55342^07@34#8&	34,800	125 (char. E, H) or 250 (char. K, M)	E, H, K, M	B, C, W	E	S, T	P, R	DAL,IRC2,MSI,OHM, SOA
D55342^07@35#7&	35,700	125 (char. E, H) or 250 (char. K, M)	E, H, K, M	B, C, W	E	S, T	P, R	DAL,IRC2,MSI,OHM, SOA
D55342^07@36#0&	36,000	125 (char. E, H) or 250 (char. K, M)	E, H, K, M	B, C, W	H, K	S, T	P, R	DAL,IRC2,MSI,OHM, SOA
	Resistance	Power	Char.	Term.	Res. Tol./	Level 1	Level 2	
Part Number	Value (Ohms)	Rating (mW)	(^)	Type (@)	Multiplier (#)	FRL (&)	FRL (&)	Manufacturer
D55342^07@36#5&	36,500	125 (char. E, H) or 250 (char. K, M)	E, H, K, M	B, C, W	E	S, T	P, R	DAL,IRC2,MSI,OHM, SOA
D55342^07@37#4&	37,400	125 (char. E, H) or 250 (char. K, M)	E, H, K, M	B, C, W	E	S, T	P, R	DAL,IRC2,MSI,OHM, SOA
D55342^07@38#3&	38,300	125 (char. E, H) or 250 (char. K, M)	E, H, K, M	B, C, W	E	S, T	P, R	DAL,IRC2,MSI,OHM, SOA
D55342^07@39#0&	39,000	125 (char. E, H) or 250 (char. K, M)	E, H, K, M	B, C, W	H, K, N	S, T	P, R	DAL,IRC2,MSI,OHM, SOA
D55342^07@39#2&	39,200	125 (char. E, H) or 250 (char. K, M)	E, H, K, M	B, C, W	E	S, T	P, R	DAL,IRC2,MSI,OHM, SOA
D55342^07@40#2&	40,200	125 (char. E, H) or 250 (char. K, M)	E, H, K, M	B, C, W	E	S, T	P, R	DAL,IRC2,MSI,OHM, SOA
D55342^07@41#2&	41,200	125 (char. E, H) or 250 (char. K, M)	E, H, K, M	B, C, W	E	S, T	P, R	DAL,IRC2,MSI,OHM, SOA
D55342^07@42#2&	42,200	125 (char. E, H) or 250 (char. K, M)	E, H, K, M	B, C, W	E	S, T	P, R	DAL,IRC2,MSI,OHM, SOA
D55342^07@43#0&	43,000	125 (char. E, H) or 250 (char. K, M)	E, H, K, M	B, C, W	H, K	S, T	P, R	DAL,IRC2,MSI,OHM, SOA
	Resistance	Power	Char.	Term.	Res. Tol./	Level 1	Level 2	
Part Number	Value (Ohms)	Rating (mW)	(^)	Type (@)	Multiplier (#)	FRL (&)	FRL (&)	Manufacturer
D55342^07@43#2&	43,200	125 (char. E, H) or 250 (char. K, M)	E, H, K, M	B, C, W	E	S, T	P, R	DAL,IRC2,MSI,OHM, SOA
D55342^07@44#2&	44,200	125 (char. E, H) or 250 (char. K, M)	E, H, K, M	B, C, W	E	S, T	P, R	DAL,IRC2,MSI,OHM, SOA
D55342^07@45#3&	45,300	125 (char. E, H) or 250 (char. K, M)	E, H, K, M	B, C, W	E	S, T	P, R	DAL,IRC2,MSI,OHM, SOA
D55342^07@46#4&	46,400	125 (char. E, H) or 250 (char. K, M)	E, H, K, M	B, C, W	E	S, T	P, R	DAL,IRC2,MSI,OHM, SOA

D55342^07@47#0&	47,000	125 (char. E, H) or 250 (char. K, M)	E, H, K, M	B, C, W	H, K, N	S, T	P, R	DAL,IRC2,MSI,OHM, SOA
D55342^07@47#5&	47,500	125 (char. E, H) or 250 (char. K, M)	E, H, K, M	B, C, W	E	S, T	P, R	DAL,IRC2,MSI,OHM, SOA
D55342^07@48#7&	48,700	125 (char. E, H) or 250 (char. K, M)	E, H, K, M	B, C, W	E	S, T	P, R	DAL,IRC2,MSI,OHM, SOA
D55342^07@49#9&	49,900	125 (char. E, H) or 250 (char. K, M)	E, H, K, M	B, C, W	E	S, T	P, R	DAL,IRC2,MSI,OHM, SOA
D55342^07@51#0&	51,000	125 (char. E, H) or 250 (char. K, M)	E, H, K, M	B, C, W	H, K	S, T	P, R	DAL,IRC2,MSI,OHM, SOA
	Resistance	Power	Char.	Term.	Res. Tol./	Level 1	Level 2	
Part Number	Value (Ohms)	Rating (mW)	(^)	Type (@)	Multiplier (#)	FRL (&)	FRL (&)	Manufacturer
D55342^07@51#1&	51,100	125 (char. E, H) or 250 (char. K, M)	E, H, K, M	B, C, W	E	S, T	P, R	DAL,IRC2,MSI,OHM, SOA
D55342^07@52#3&	52,300	125 (char. E, H) or 250 (char. K, M)	E, H, K, M	B, C, W	E	S, T	P, R	DAL,IRC2,MSI,OHM, SOA
D55342^07@53#6&	53,600	125 (char. E, H) or 250 (char. K, M)	E, H, K, M	B, C, W	E	S, T	P, R	DAL,IRC2,MSI,OHM, SOA
D55342^07@54#9&	54,900	125 (char. E, H) or 250 (char. K, M)	E, H, K, M	B, C, W	E	S, T	P, R	DAL,IRC2,MSI,OHM, SOA
D55342^07@56#0&	56,000	125 (char. E, H) or 250 (char. K, M)	E, H, K, M	B, C, W	H, K, N	S, T	P, R	DAL,IRC2,MSI,OHM, SOA
D55342^07@56#2&	56,200	125 (char. E, H) or 250 (char. K, M)	E, H, K, M	B, C, W	E	S, T	P, R	DAL,IRC2,MSI,OHM, SOA
D55342^07@57#6&	57,600	125 (char. E, H) or 250 (char. K, M)	E, H, K, M	B, C, W	E	S, T	P, R	DAL,IRC2,MSI,OHM, SOA
D55342^07@59#0&	59,000	125 (char. E, H) or 250 (char. K, M)	E, H, K, M	B, C, W	E	S, T	P, R	DAL,IRC2,MSI,OHM, SOA
D55342^07@60#4&	60,400	125 (char. E, H) or 250 (char. K, M)	E, H, K, M	B, C, W	E	S, T	P, R	DAL,IRC2,MSI,OHM, SOA
	Resistance	Power	Char.	Term.	Res. Tol./	Level 1	Level 2	
Part Number	Value (Ohms)	Rating (mW)	(^)	Type (@)	Multiplier (#)	FRL (&)	FRL (&)	Manufacturer
D55342^07@61#9&	61,900	125 (char. E, H) or 250 (char. K, M)	E, H, K, M	B, C, W	E	S, T	P, R	DAL,IRC2,MSI,OHM, SOA
D55342^07@62#0&	62,000	125 (char. E, H) or 250 (char. K, M)	E, H, K, M	B, C, W	H, K	S, T	P, R	DAL,IRC2,MSI,OHM, SOA
D55342^07@63#4&	63,400	125 (char. E, H) or 250 (char. K, M)	E, H, K, M	B, C, W	E	S, T	P, R	DAL,IRC2,MSI,OHM, SOA
D55342^07@64#9&	64,900	125 (char. E, H) or 250 (char. K, M)	E, H, K, M	B, C, W	E	S, T	P, R	DAL,IRC2,MSI,OHM, SOA
D55342^07@66#5&	66,500	125 (char. E, H) or 250 (char. K, M)	E, H, K, M	B, C, W	E	S, T	P, R	DAL,IRC2,MSI,OHM, SOA
D55342^07@68#0&	68,000	125 (char. E, H) or 250 (char. K, M)	E, H, K, M	B, C, W	H, K, N	S, T	P, R	DAL,IRC2,MSI,OHM, SOA
D55342^07@68#1&	68,100	125 (char. E, H) or 250 (char. K, M)	E, H, K, M	B, C, W	E	S, T	P, R	DAL,IRC2,MSI,OHM, SOA
D55342^07@69#8&	69,800	125 (char. E, H) or 250 (char. K, M)	E, H, K, M	B, C, W	E	S, T	P, R	DAL,IRC2,MSI,OHM, SOA
D55342^07@71#5&	71,500	125 (char. E, H) or 250 (char. K, M)	E, H, K, M	B, C, W	E	S, T	P, R	DAL,IRC2,MSI,OHM, SOA
	Resistance	Power	Char.	Term.	Res. Tol./	Level 1	Level 2	
Part Number	Value (Ohms)	Rating (mW)	(^)	Type (@)	Multiplier (#)	FRL (&)	FRL (&)	Manufacturer
D55342^07@73#2&	73,200	125 (char. E, H) or 250 (char. K, M)	E, H, K, M	B, C, W	E	S, T	P, R	DAL,IRC2,MSI,OHM, SOA
D55342^07@75#0&	75,000	125 (char. E, H) or 250 (char. K, M)	E, H, K, M	B, C, W	E, H, K	S, T	P, R	DAL,IRC2,MSI,OHM, SOA
D55342^07@76#8&	76,800	125 (char. E, H) or 250 (char. K, M)	E, H, K, M	B, C, W	E	S, T	P, R	DAL,IRC2,MSI,OHM, SOA
D55342^07@78#7&	78,700	125 (char. E, H) or 250 (char. K, M)	E, H, K, M	B, C, W	E	S, T	P, R	DAL,IRC2,MSI,OHM, SOA
D55342^07@80#6&	80,600	125 (char. E, H) or 250 (char. K, M)	E, H, K, M	B, C, W	E	S, T	P, R	DAL,IRC2,MSI,OHM, SOA
D55342^07@82#0&	82,000	125 (char. E, H) or 250 (char. K, M)	E, H, K, M	B, C, W	H, K, N	S, T	P, R	DAL,IRC2,MSI,OHM, SOA
D55342^07@82#5&	82,500	125 (char. E, H) or 250 (char. K, M)	E, H, K, M	B, C, W	E	S, T	P, R	DAL,IRC2,MSI,OHM, SOA
D55342^07@84#5&	84,500	125 (char. E, H) or 250 (char. K, M)	E, H, K, M	B, C, W	E	S, T	P, R	DAL,IRC2,MSI,OHM, SOA
D55342^07@86#6&	86,600	125 (char. E, H) or 250 (char. K, M)	E, H, K, M	B, C, W	E	S, T	P, R	DAL,IRC2,MSI,OHM, SOA
	Resistance	Power	Char.	Term.	Res. Tol./	Level 1	Level 2	
Part Number	Value (Ohms)	Rating (mW)	(^)	Type (@)	Multiplier (#)	FRL (&)	FRL (&)	Manufacturer
D55342^07@88#7&	88,700	125 (char. E, H) or 250 (char. K, M)	E, H, K, M	B, C, W	E	S, T	P, R	DAL,IRC2,MSI,OHM, SOA
D55342^07@90#9&	90,900	125 (char. E, H) or 250 (char. K, M)	E, H, K, M	B, C, W	E	S, T	P, R	DAL,IRC2,MSI,OHM, SOA
D55342^07@91#0&	91,000	125 (char. E, H) or 250 (char. K, M)	E, H, K, M	B, C, W	H, K	S, T	P, R	DAL,IRC2,MSI,OHM, SOA
D55342^07@93#1&	93,100	125 (char. E, H) or 250 (char. K, M)	E, H, K, M	B, C, W	E	S, T	P, R	DAL,IRC2,MSI,OHM, SOA
D55342^07@95#3&	95,300	125 (char. E, H) or 250 (char. K, M)	E, H, K, M	B, C, W	E	S, T	P, R	DAL,IRC2,MSI,OHM, SOA
D55342^07@97#6&	97,600	125 (char. E, H) or 250 (char. K, M)	E, H, K, M	B, C, W	E	S, T	P, R	DAL,IRC2,MSI,OHM, SOA
	Resistance	Power	Char.	Term.	Res. Tol./	Level 1	Level 2	

Part Number	Value (Ohms)	Rating (mW)	(^)	Type (@)	Multiplier (#)	FRL (&)	FRL (&)	Manufacturer

MIL-PRF-55342/7 (RM1206) Film Chip Resistors: 100,000 Ohms Through 976,000 Ohms

	Resistance	Power	Char.	Term.	Res. Tol./	Level 1	Level 2	
Part Number	Value (Ohms)	Rating (mW)	(^)	Type (@)	Multiplier (#)	FRL (&)	FRL (&)	Manufacturer
D55342^07@100#&	100,000	125 (char. E, H) or 250 (char. K, M)	E, H, K, M	B, C, W	E, H, K, N	S, T	P, R	DAL,IRC2,MSI,OHM, SOA
D55342^07@102#&	102,000	125 (char. E, H) or 250 (char. K, M)	E, H, K, M	B, C, W	E	S, T	P, R	DAL,IRC2,MSI,OHM, SOA
D55342^07@105#&	105,000	125 (char. E, H) or 250 (char. K, M)	E, H, K, M	B, C, W	E	S, T	P, R	DAL,IRC2,MSI,OHM, SOA
D55342^07@107#&	107,000	125 (char. E, H) or 250 (char. K, M)	E, H, K, M	B, C, W	E	S, T	P, R	DAL,IRC2,MSI,OHM, SOA
D55342^07@110#&	110,000	125 (char. E, H) or 250 (char. K, M)	E, H, K, M	B, C, W	E, H, K	S, T	P, R	DAL,IRC2,MSI,OHM, SOA
D55342^07@113#&	113,000	125 (char. E, H) or 250 (char. K, M)	E, H, K, M	B, C, W	E	S, T	P, R	DAL,IRC2,MSI,OHM, SOA
D55342^07@115#&	115,000	125 (char. E, H) or 250 (char. K, M)	E, H, K, M	B, C, W	E	S, T	P, R	DAL,IRC2,MSI,OHM, SOA
D55342^07@118#&	118,000	125 (char. E, H) or 250 (char. K, M)	E, H, K, M	B, C, W	E	S, T	P, R	DAL,IRC2,MSI,OHM, SOA
D55342^07@120#&	120,000	125 (char. E, H) or 250 (char. K, M)	E, H, K, M	B, C, W	H, K, N	S, T	P, R	DAL,IRC2,MSI,OHM, SOA
	Resistance	Power	Char.	Term.	Res. Tol./	Level 1	Level 2	
Part Number	Value (Ohms)	Rating (mW)	(^)	Type (@)	Multiplier (#)	FRL (&)	FRL (&)	Manufacturer
D55342^07@121#&	121,000	125 (char. E, H) or 250 (char. K, M)	E, H, K, M	B, C, W	E	S, T	P, R	DAL,IRC2,MSI,OHM, SOA
D55342^07@124#&	124,000	125 (char. E, H) or 250 (char. K, M)	E, H, K, M	B, C, W	E	S, T	P, R	DAL,IRC2,MSI,OHM, SOA
D55342^07@127#&	127,000	125 (char. E, H) or 250 (char. K, M)	E, H, K, M	B, C, W	E	S, T	P, R	DAL,MSI,OHM,SOA
D55342^07@130#&	130,000	125 (char. E, H) or 250 (char. K, M)	E, H, K, M	B, C, W	E, H, K	S, T	P, R	DAL,MSI,OHM,SOA
D55342^07@133#&	133,000	125 (char. E, H) or 250 (char. K, M)	E, H, K, M	B, C, W	E	S, T	P, R	DAL,MSI,OHM,SOA
D55342^07@137#&	137,000	125 (char. E, H) or 250 (char. K, M)	E, H, K, M	B, C, W	E	S, T	P, R	DAL,MSI,OHM,SOA
D55342^07@140#&	140,000	125 (char. E, H) or 250 (char. K, M)	E, H, K, M	B, C, W	E	S, T	P, R	DAL,MSI,OHM,SOA
D55342^07@143#&	143,000	125 (char. E, H) or 250 (char. K, M)	E, H, K, M	B, C, W	E	S, T	P, R	DAL,MSI,OHM,SOA
D55342^07@147#&	147,000	125 (char. E, H) or 250 (char. K, M)	E, H, K, M	B, C, W	E	S, T	P, R	DAL,MSI,OHM,SOA
	Resistance	Power	Char.	Term.	Res. Tol./	Level 1	Level 2	
Part Number	Value (Ohms)	Rating (mW)	(^)	Type (@)	Multiplier (#)	FRL (&)	FRL (&)	Manufacturer
D55342^07@150#&	150,000	125 (char. E, H) or 250 (char. K, M)	E, H, K, M	B, C, W	E, H, K, N	S, T	P, R	DAL,MSI,OHM,SOA
D55342^07@154#&	154,000	125 (char. E, H) or 250 (char. K, M)	E, H, K, M	B, C, W	E	S, T	P, R	DAL,MSI,OHM,SOA
D55342^07@158#&	158,000	125 (char. E, H) or 250 (char. K, M)	E, H, K, M	B, C, W	E	S, T	P, R	DAL,MSI,OHM,SOA
D55342^07@160#&	160,000	125 (char. E, H) or 250 (char. K, M)	E, H, K, M	B, C, W	H, K	S, T	P, R	DAL,MSI,OHM,SOA
D55342^07@162#&	162,000	125 (char. E, H) or 250 (char. K, M)	E, H, K, M	B, C, W	E	S, T	P, R	DAL,MSI,OHM,SOA
D55342^07@165#&	165,000	125 (char. E, H) or 250 (char. K, M)	E, H, K, M	B, C, W	E	S, T	P, R	DAL,MSI,OHM,SOA
D55342^07@169#&	169,000	125 (char. E, H) or 250 (char. K, M)	E, H, K, M	B, C, W	E	S, T	P, R	DAL,MSI,OHM,SOA
D55342^07@174#&	174,000	125 (char. E, H) or 250 (char. K, M)	E, H, K, M	B, C, W	E	S, T	P, R	DAL,MSI,OHM,SOA
D55342^07@178#&	178,000	125 (char. E, H) or 250 (char. K, M)	E, H, K, M	B, C, W	E	S, T	P, R	DAL,MSI,OHM,SOA
	Resistance	Power	Char.	Term.	Res. Tol./	Level 1	Level 2	
Part Number	Value (Ohms)	Rating (mW)	(^)	Type (@)	Multiplier (#)	FRL (&)	FRL (&)	Manufacturer
D55342^07@180#&	180,000	125 (char. E, H) or 250 (char. K, M)	E, H, K, M	B, C, W	H, K, N	S, T	P, R	DAL,MSI,OHM,SOA
D55342^07@182#&	182,000	125 (char. E, H) or 250 (char. K, M)	E, H, K, M	B, C, W	E	S, T	P, R	DAL,MSI,OHM,SOA
D55342^07@187#&	187,000	125 (char. E, H) or 250 (char. K, M)	E, H, K, M	B, C, W	E	S, T	P, R	DAL,MSI,OHM,SOA
D55342^07@191#&	191,000	125 (char. E, H) or 250 (char. K, M)	E, H, K, M	B, C, W	E	S, T	P, R	DAL,MSI,OHM,SOA
D55342^07@196#&	196,000	125 (char. E, H) or 250 (char. K, M)	E, H, K, M	B, C, W	E	S, T	P, R	DAL,MSI,OHM,SOA
D55342^07@200#&	200,000	125 (char. E, H) or 250 (char. K, M)	E, H, K, M	B, C, W	E, H, K, N	S, T	P, R	DAL,MSI,OHM,SOA

D55342^07@205#&	205,000	125 (char. E, H) or 250 (char. K, M)	E, H, K, M	B, C, W	E	S, T	P, R	DAL,MSI,OHM,SOA
D55342^07@210#&	210,000	125 (char. E, H) or 250 (char. K, M)	E, H, K, M	B, C, W	E	S, T	P, R	DAL,MSI,OHM,SOA
D55342^07@215#&	215,000	125 (char. E, H) or 250 (char. K, M)	E, H, K, M	B, C, W	E	S, T	P, R	DAL,MSI,OHM,SOA
	Resistance	Power	Char.	Term.	Res. Tol./	Level 1	Level 2	
Part Number	Value (Ohms)	Rating (mW)	(^)	Type (@)	Multiplier (#)	FRL (&)	FRL (&)	Manufacturer
D55342^07@220#&	220,000	125 (char. E, H) or 250 (char. K, M)	E, H, K, M	B, C, W	H, K, N	S, T	P, R	DAL,MSI,OHM,SOA
D55342^07@221#&	221,000	125 (char. E, H) or 250 (char. K, M)	E, H, K, M	B, C, W	E	S, T	P, R	DAL,MSI,OHM,SOA
D55342^07@226#&	226,000	125 (char. E, H) or 250 (char. K, M)	E, H, K, M	B, C, W	E	S, T	P, R	DAL,MSI,OHM,SOA
D55342^07@232#&	232,000	125 (char. E, H) or 250 (char. K, M)	E, H, K, M	B, C, W	E	S, T	P, R	DAL,MSI,OHM,SOA
D55342^07@237#&	237,000	125 (char. E, H) or 250 (char. K, M)	E, H, K, M	B, C, W	E	S, T	P, R	DAL,MSI,OHM,SOA
D55342^07@240#&	240,000	125 (char. E, H) or 250 (char. K, M)	E, H, K, M	B, C, W	H, K	S, T	P, R	DAL,MSI,OHM,SOA
D55342^07@243#&	243,000	125 (char. E, H) or 250 (char. K, M)	E, H, K, M	B, C, W	E	S, T	P, R	DAL,MSI,OHM,SOA
D55342^07@249#&	249,000	125 (char. E, H) or 250 (char. K, M)	E, H, K, M	B, C, W	E	S, T	P, R	DAL,MSI,OHM,SOA
D55342^07@255#&	255,000	125 (char. E, H) or 250 (char. K, M)	E, H, K, M	B, C, W	E	S, T	P, R	DAL,MSI,OHM,SOA
	Resistance	Power	Char.	Term.	Res. Tol./	Level 1	Level 2	
Part Number	Value (Ohms)	Rating (mW)	(^)	Type (@)	Multiplier (#)	FRL (&)	FRL (&)	Manufacturer
D55342^07@261#&	261,000	125 (char. E, H) or 250 (char. K, M)	E, H, K, M	B, C, W	E	S, T	P, R	DAL,MSI,OHM,SOA
D55342^07@267#&	267,000	125 (char. E, H) or 250 (char. K, M)	E, H, K, M	B, C, W	E	S, T	P, R	DAL,MSI,OHM,SOA
D55342^07@270#&	270,000	125 (char. E, H) or 250 (char. K, M)	E, H, K, M	B, C, W	H, K, N	S, T	P, R	DAL,MSI,OHM,SOA
D55342^07@274#&	274,000	125 (char. E, H) or 250 (char. K, M)	E, H, K, M	B, C, W	E	S, T	P, R	DAL,MSI,OHM,SOA
D55342^07@280#&	280,000	125 (char. E, H) or 250 (char. K, M)	E, H, K, M	B, C, W	E	S, T	P, R	DAL,MSI,OHM,SOA
D55342^07@287#&	287,000	125 (char. E, H) or 250 (char. K, M)	E, H, K, M	B, C, W	E	S, T	P, R	DAL,MSI,OHM,SOA
D55342^07@294#&	294,000	125 (char. E, H) or 250 (char. K, M)	E, H, K, M	B, C, W	E	S, T	P, R	DAL,MSI,OHM,SOA
D55342^07@300#&	300,000	125 (char. E, H) or 250 (char. K, M)	E, H, K, M	B, C, W	H, K	S, T	P, R	DAL,MSI,OHM,SOA
D55342^07@301#&	301,000	125 (char. E, H) or 250 (char. K, M)	E, H, K, M	B, C, W	E	S, T	P, R	DAL,MSI,OHM,SOA
	Resistance	Power	Char.	Term.	Res. Tol./	Level 1	Level 2	
Part Number	Value (Ohms)	Rating (mW)	(^)	Type (@)	Multiplier (#)	FRL (&)	FRL (&)	Manufacturer
D55342^07@309#&	309,000	125 (char. E, H) or 250 (char. K, M)	E, H, K, M	B, C, W	E	S, T	P, R	DAL,MSI,OHM,SOA
D55342^07@316#&	316,000	125 (char. E, H) or 250 (char. K, M)	E, H, K, M	B, C, W	E	S, T	P, R	DAL,MSI,OHM,SOA
D55342^07@324#&	324,000	125 (char. E, H) or 250 (char. K, M)	E, H, K, M	B, C, W	E	S, T	P, R	DAL,MSI,OHM,SOA
D55342^07@330#&	330,000	125 (char. E, H) or 250 (char. K, M)	E, H, K, M	B, C, W	H, K, N	S, T	P, R	DAL,MSI,OHM,SOA
D55342^07@332#&	332,000	125 (char. E, H) or 250 (char. K, M)	E, H, K, M	B, C, W	E	S, T	P, R	DAL,MSI,OHM,SOA
D55342^07@340#&	340,000	125 (char. E, H) or 250 (char. K, M)	E, H, K, M	B, C, W	E	S, T	P, R	DAL,MSI,OHM,SOA
D55342^07@348#&	348,000	125 (char. E, H) or 250 (char. K, M)	E, H, K, M	B, C, W	E	S, T	P, R	DAL,MSI,OHM,SOA
D55342^07@357#&	357,000	125 (char. E, H) or 250 (char. K, M)	E, H, K, M	B, C, W	E	S, T	P, R	DAL,MSI,OHM,SOA
D55342^07@360#&	360,000	125 (char. E, H) or 250 (char. K, M)	E, H, K, M	B, C, W	H, K	S, T	P, R	DAL,MSI,OHM,SOA
	Resistance	Power	Char.	Term.	Res. Tol./	Level 1	Level 2	
Part Number	Value (Ohms)	Rating (mW)	(^)	Type (@)	Multiplier (#)	FRL (&)	FRL (&)	Manufacturer
D55342^07@365#&	365,000	125 (char. E, H) or 250 (char. K, M)	E, H, K, M	B, C, W	E	S, T	P, R	DAL,MSI,OHM,SOA
D55342^07@374#&	374,000	125 (char. E, H) or 250 (char. K, M)	E, H, K, M	B, C, W	E	S, T	P, R	DAL,MSI,OHM,SOA
D55342^07@383#&	383,000	125 (char. E, H) or 250 (char. K, M)	E, H, K, M	B, C, W	E	S, T	P, R	DAL,MSI,OHM,SOA
D55342^07@390#&	390,000	125 (char. E, H) or 250 (char. K, M)	E, H, K, M	B, C, W	H, K, N	S, T	P, R	DAL,MSI,OHM,SOA
D55342^07@392#&	392,000	125 (char. E, H) or 250 (char. K, M)	E, H, K, M	B, C, W	E	S, T	P, R	DAL,MSI,OHM,SOA
D55342^07@402#&	402,000	125 (char. E, H) or 250 (char. K, M)	E, H, K, M	B, C, W	E	S, T	P, R	DAL,MSI,OHM,SOA
D55342^07@412#&	412,000	125 (char. E, H) or 250 (char. K, M)	E, H, K, M	B, C, W	E	S, T	P, R	DAL,MSI,OHM,SOA
D55342^07@422#&	422,000	125 (char. E, H) or 250 (char. K, M)	E, H, K, M	B, C, W	E	S, T	P, R	DAL,MSI,OHM,SOA
D55342^07@430#&	430,000	125 (char. E, H) or 250 (char. K, M)	E, H, K, M	B, C, W	H, K	S, T	P, R	DAL,MSI,OHM,SOA

	Resistance	Power	Char.	Term.	Res. Tol./	Level 1	Level 2	
Part Number	Value (Ohms)	Rating (mW)	(^)	Type (@)	Multiplier (#)	FRL (&)	FRL (&)	Manufacturer
D55342^07@432#&	432,000	125 (char. E, H) or 250 (char. K, M)	E, H, K, M	B, C, W	E	S, T	P, R	DAL,MSI,OHM,SOA
D55342^07@442#&	442,000	125 (char. E, H) or 250 (char. K, M)	E, H, K, M	B, C, W	E	S, T	P, R	DAL,MSI,OHM,SOA
D55342^07@453#&	453,000	125 (char. E, H) or 250 (char. K, M)	E, H, K, M	B, C, W	E	S, T	P, R	DAL,MSI,OHM,SOA
D55342^07@464#&	464,000	125 (char. E, H) or 250 (char. K, M)	E, H, K, M	B, C, W	E	S, T	P, R	DAL,MSI,OHM,SOA
D55342^07@470#&	470,000	125 (char. E, H) or 250 (char. K, M)	E, H, K, M	B, C, W	H, K, N	S, T	P, R	DAL,MSI,OHM,SOA
D55342^07@475#&	475,000	125 (char. E, H) or 250 (char. K, M)	E, H, K, M	B, C, W	E	S, T	P, R	DAL,MSI,OHM,SOA
D55342^07@487#&	487,000	125 (char. E, H) or 250 (char. K, M)	E, H, K, M	B, C, W	E	S, T	P, R	DAL,MSI,OHM,SOA
D55342^07@499#&	499,000	125 (char. E, H) or 250 (char. K, M)	E, H, K, M	B, C, W	E	S, T	P, R	DAL,MSI,OHM,SOA
D55342^07@510#&	510,000	125 (char. E, H) or 250 (char. K, M)	E, H, K, M	B, C, W	H, K	S, T	P, R	DAL,MSI,OHM,SOA
	Resistance	Power	Char.	Term.	Res. Tol./	Level 1	Level 2	
Part Number	Value (Ohms)	Rating (mW)	(^)	Type (@)	Multiplier (#)	FRL (&)	FRL (&)	Manufacturer
D55342^07@511#&	511,000	125 (char. E, H) or 250 (char. K, M)	E, H, K, M	B, C, W	E	S, T	P, R	DAL,MSI,OHM,SOA
D55342^07@523#&	523,000	125 (char. E, H) or 250 (char. K, M)	E, H, K, M	B, C, W	E	S, T	P, R	DAL,MSI,OHM,SOA
D55342^07@536#&	536,000	125 (char. E, H) or 250 (char. K, M)	E, H, K, M	B, C, W	E	S, T	P, R	DAL,MSI,OHM,SOA
D55342^07@549#&	549,000	125 (char. E, H) or 250 (char. K, M)	E, H, K, M	B, C, W	E	S, T	P, R	DAL,MSI,OHM,SOA
D55342^07@560#&	560,000	125 (char. E, H) or 250 (char. K, M)	E, H, K, M	B, C, W	H, K, N	S, T	P, R	DAL,MSI,OHM,SOA
D55342^07@562#&	562,000	125 (char. E, H) or 250 (char. K, M)	E, H, K, M	B, C, W	E	S, T	P, R	DAL,MSI,OHM,SOA
D55342^07@576#&	576,000	125 (char. E, H) or 250 (char. K, M)	E, H, K, M	B, C, W	E	S, T	P, R	DAL,MSI,OHM,SOA
D55342^07@590#&	590,000	125 (char. E, H) or 250 (char. K, M)	E, H, K, M	B, C, W	E	S, T	P, R	DAL,MSI,OHM,SOA
D55342^07@604#&	604,000	125 (char. E, H) or 250 (char. K, M)	E, H, K, M	B, C, W	E	S, T	P, R	DAL,MSI,OHM,SOA
	Resistance	Power	Char.	Term.	Res. Tol./	Level 1	Level 2	
Part Number	Value (Ohms)	Rating (mW)	(^)	Type (@)	Multiplier (#)	FRL (&)	FRL (&)	Manufacturer
D55342^07@619#&	619,000	125 (char. E, H) or 250 (char. K, M)	E, H, K, M	B, C, W	E	S, T	P, R	DAL,MSI,OHM,SOA
D55342^07@620#&	620,000	125 (char. E, H) or 250 (char. K, M)	E, H, K, M	B, C, W	H, K	S, T	P, R	DAL,MSI,OHM,SOA
D55342^07@634#&	634,000	125 (char. E, H) or 250 (char. K, M)	E, H, K, M	B, C, W	E	S, T	P, R	DAL,MSI,OHM,SOA
D55342^07@649#&	649,000	125 (char. E, H) or 250 (char. K, M)	E, H, K, M	B, C, W	E	S, T	P, R	DAL,MSI,OHM,SOA
D55342^07@665#&	665,000	125 (char. E, H) or 250 (char. K, M)	E, H, K, M	B, C, W	E	S, T	P, R	DAL,MSI,OHM,SOA
D55342^07@680#&	680,000	125 (char. E, H) or 250 (char. K, M)	E, H, K, M	B, C, W	H, K, N	S, T	P, R	DAL,MSI,OHM,SOA
D55342^07@681#&	681,000	125 (char. E, H) or 250 (char. K, M)	E, H, K, M	B, C, W	E	S, T	P, R	DAL,MSI,OHM,SOA
D55342^07@698#&	698,000	125 (char. E, H) or 250 (char. K, M)	E, H, K, M	B, C, W	E	S, T	P, R	DAL,MSI,OHM,SOA
D55342^07@715#&	715,000	125 (char. E, H) or 250 (char. K, M)	E, H, K, M	B, C, W	E	S, T	P, R	DAL,MSI,OHM,SOA
	Resistance	Power	Char.	Term.	Res. Tol./	Level 1	Level 2	
Part Number	Value (Ohms)	Rating (mW)	(^)	Type (@)	Multiplier (#)	FRL (&)	FRL (&)	Manufacturer
D55342^07@732#&	732,000	125 (char. E, H) or 250 (char. K, M)	E, H, K, M	B, C, W	E	S, T	P, R	DAL,MSI,OHM,SOA
D55342^07@750#&	750,000	125 (char. E, H) or 250 (char. K, M)	E, H, K, M	B, C, W	E, H, K	S, T	P, R	DAL,MSI,OHM,SOA
D55342^07@768#&	768,000	125 (char. E, H) or 250 (char. K, M)	E, H, K, M	B, C, W	E	S, T	P, R	DAL,MSI,OHM,SOA
D55342^07@787#&	787,000	125 (char. E, H) or 250 (char. K, M)	E, H, K, M	B, C, W	E	S, T	P, R	DAL,MSI,OHM,SOA
D55342^07@806#&	806,000	125 (char. E, H) or 250 (char. K, M)	E, H, K, M	B, C, W	E	S, T	P, R	DAL,MSI,OHM,SOA
D55342^07@820#&	820,000	125 (char. E, H) or 250 (char. K, M)	E, H, K, M	B, C, W	H, K, N	S, T	P, R	DAL,MSI,OHM,SOA
D55342^07@825#&	825,000	125 (char. E, H) or 250 (char. K, M)	E, H, K, M	B, C, W	E	S, T	P, R	DAL,MSI,OHM,SOA
D55342^07@845#&	845,000	125 (char. E, H) or 250 (char. K, M)	E, H, K, M	B, C, W	E	S, T	P, R	DAL,MSI,OHM,SOA
D55342^07@866#&	866,000	125 (char. E, H) or 250 (char. K, M)	E, H, K, M	B, C, W	E	S, T	P, R	DAL,MSI,OHM,SOA
	Resistance	Power	Char.	Term.	Res. Tol./	Level 1	Level 2	
Part Number	Value (Ohms)	Rating (mW)	(^)	Type (@)	Multiplier (#)	FRL (&)	FRL (&)	Manufacturer
D55342^07@887#&	887,000	125 (char. E, H) or 250 (char. K, M)	E, H, K, M	B, C, W	E	S, T	P, R	DAL,MSI,OHM,SOA

D55342^07@909#&	909,000	125 (char. E, H) or 250 (char. K, M)	E, H, K, M	B, C, W	E	S, T	P, R	DAL,MSI,OHM,SOA
D55342^07@910#&	910,000	125 (char. E, H) or 250 (char. K, M)	E, H, K, M	B, C, W	H, K	S, T	P, R	DAL,MSI,OHM,SOA
D55342^07@931#&	931,000	125 (char. E, H) or 250 (char. K, M)	E, H, K, M	B, C, W	E	S, T	P, R	DAL,MSI,OHM,SOA
D55342^07@953#&	953,000	125 (char. E, H) or 250 (char. K, M)	E, H, K, M	B, C, W	E	S, T	P, R	DAL,MSI,OHM,SOA
D55342^07@976#&	976,000	125 (char. E, H) or 250 (char. K, M)	E, H, K, M	B, C, W	E	S, T	P, R	DAL,MSI,OHM,SOA
	Resistance	Power	Char.	Term.	Res. Tol./	Level 1	Level 2	
Part Number	Value (Ohms)	Rating (mW)	(^)	Type (@)	Multiplier (#)	FRL (&)	FRL (&)	Manufacturer

MIL-PRF-55342/7 (RM1206) Film Chip Resistors: 1,000,000 Ohms Through 5,620,000 Ohms

	Resistance	Power	Char.	Term.	Res. Tol./	Level 1	Level 2	
Part Number	Value (Ohms)	Rating (mW)	(^)	Type (@)	Multiplier (#)	FRL (&)	FRL (&)	Manufacturer
D55342^07@1#00&	1,000,000	125 (char. E, H) or 250 (char. K, M)	E, H, K, M	B, C, W	F, T, L, P	S, T	P, R	DAL,MSI,OHM,SOA
D55342^07@1#02&	1,020,000	125 (char. E, H) or 250 (char. K, M)	E, H, K, M	B, C, W	F	S, T	P, R	DAL,MSI,SOA
D55342^07@1#05&	1,050,000	125 (char. E, H) or 250 (char. K, M)	E, H, K, M	B, C, W	F	S, T	P, R	DAL,MSI,SOA
D55342^07@1#07&	1,070,000	125 (char. E, H) or 250 (char. K, M)	E, H, K, M	B, C, W	F	S, T	P, R	DAL,MSI,SOA
D55342^07@1#10&	1,100,000	125 (char. E, H) or 250 (char. K, M)	E, H, K, M	B, C, W	F, T, L	S, T	P, R	DAL,MSI,SOA
D55342^07@1#13&	1,130,000	125 (char. E, H) or 250 (char. K, M)	E, H, K, M	B, C, W	F	S, T	P, R	DAL,MSI,SOA
D55342^07@1#15&	1,150,000	125 (char. E, H) or 250 (char. K, M)	E, H, K, M	B, C, W	F	S, T	P, R	DAL,MSI,SOA
D55342^07@1#18&	1,180,000	125 (char. E, H) or 250 (char. K, M)	E, H, K, M	B, C, W	F	S, T	P, R	DAL,MSI,SOA
D55342^07@1#20&	1,200,000	125 (char. E, H) or 250 (char. K, M)	E, H, K, M	B, C, W	T, L, P	S, T	P, R	DAL,MSI,SOA
	Resistance	Power	Char.	Term.	Res. Tol./	Level 1	Level 2	
Part Number	Value (Ohms)	Rating (mW)	(^)	Type (@)	Multiplier (#)	FRL (&)	FRL (&)	Manufacturer
D55342^07@1#21&	1,210,000	125 (char. E, H) or 250 (char. K, M)	E, H, K, M	B, C, W	F	S, T	P, R	DAL,MSI,SOA
D55342^07@1#24&	1,240,000	125 (char. E, H) or 250 (char. K, M)	E, H, K, M	B, C, W	F	S, T	P, R	DAL,MSI,SOA
D55342^07@1#27&	1,270,000	125 (char. E, H) or 250 (char. K, M)	E, H, K, M	B, C, W	F	S, T	P, R	DAL,MSI,SOA
D55342^07@1#30&	1,300,000	125 (char. E, H) or 250 (char. K, M)	E, H, K, M	B, C, W	F, T, L	S, T	P, R	DAL,MSI,SOA
D55342^07@1#33&	1,330,000	125 (char. E, H) or 250 (char. K, M)	E, H, K, M	B, C, W	F	S, T	P, R	DAL,MSI,SOA
D55342^07@1#37&	1,370,000	125 (char. E, H) or 250 (char. K, M)	E, H, K, M	B, C, W	F	S, T	P, R	DAL,MSI,SOA
D55342^07@1#40&	1,400,000	125 (char. E, H) or 250 (char. K, M)	E, H, K, M	B, C, W	F	S, T	P, R	DAL,MSI,SOA
D55342^07@1#43&	1,430,000	125 (char. E, H) or 250 (char. K, M)	E, H, K, M	B, C, W	F	S, T	P, R	DAL,MSI,SOA
D55342^07@1#47&	1,470,000	125 (char. E, H) or 250 (char. K, M)	E, H, K, M	B, C, W	F	S, T	P, R	DAL,MSI,SOA
	Resistance	Power	Char.	Term.	Res. Tol./	Level 1	Level 2	
Part Number	Value (Ohms)	Rating (mW)	(^)	Type (@)	Multiplier (#)	FRL (&)	FRL (&)	Manufacturer
D55342^07@1#50&	1,500,000	125 (char. E, H) or 250 (char. K, M)	E, H, K, M	B, C, W	F, T, L, P	S, T	P, R	DAL,MSI,SOA
D55342^07@1#54&	1,540,000	125 (char. E, H) or 250 (char. K, M)	E, H, K, M	B, C, W	F	S, T	P, R	DAL,MSI,SOA
D55342^07@1#58&	1,580,000	125 (char. E, H) or 250 (char. K, M)	E, H, K, M	B, C, W	F	S, T	P, R	DAL,MSI,SOA
D55342^07@1#60&	1,600,000	125 (char. E, H) or 250 (char. K, M)	E, H, K, M	B, C, W	T, L	S, T	P, R	DAL,MSI,SOA
D55342^07@1#62&	1,620,000	125 (char. E, H) or 250 (char. K, M)	E, H, K, M	B, C, W	F	S, T	P, R	DAL,MSI,SOA
D55342^07@1#65&	1,650,000	125 (char. E, H) or 250 (char. K, M)	E, H, K, M	B, C, W	F	S, T	P, R	DAL,MSI,SOA
D55342^07@1#69&	1,690,000	125 (char. E, H) or 250 (char. K, M)	E, H, K, M	B, C, W	F	S, T	P, R	DAL,MSI,SOA
D55342^07@1#74&	1,740,000	125 (char. E, H) or 250 (char. K, M)	E, H, K, M	B, C, W	F	S, T	P, R	DAL,MSI,SOA
D55342^07@1#78&	1,780,000	125 (char. E, H) or 250 (char. K, M)	E, H, K, M	B, C, W	F	S, T	P, R	DAL,MSI,SOA
	Resistance	Power	Char.	Term.	Res. Tol./	Level 1	Level 2	
Part Number	Value (Ohms)	Rating (mW)	(^)	Type (@)	Multiplier (#)	FRL (&)	FRL (&)	Manufacturer

D55342^07@1#80&	1,800,000	125 (char. E, H) or 250 (char. K, M)	E, H, K, M	B, C, W	T, L, P	S, T	P, R	DAL,MSI,SOA
D55342^07@1#82&	1,820,000	125 (char. E, H) or 250 (char. K, M)	E, H, K, M	B, C, W	F	S, T	P, R	DAL,MSI,SOA
D55342^07@1#87&	1,870,000	125 (char. E, H) or 250 (char. K, M)	E, H, K, M	B, C, W	F	S, T	P, R	DAL,MSI,SOA
D55342^07@1#91&	1,910,000	125 (char. E, H) or 250 (char. K, M)	E, H, K, M	B, C, W	F	S, T	P, R	DAL,MSI,SOA
D55342^07@1#96&	1,960,000	125 (char. E, H) or 250 (char. K, M)	E, H, K, M	B, C, W	F	S, T	P, R	DAL,MSI,SOA
D55342^07@2#00&	2,000,000	125 (char. E, H) or 250 (char. K, M)	E, H, K, M	B, C, W	F, T, L, P	S, T	P, R	DAL,MSI,SOA
D55342^07@2#05&	2,050,000	125 (char. E, H) or 250 (char. K, M)	E, H, K, M	B, C, W	F	S, T	P, R	DAL,MSI,SOA
D55342^07@2#10&	2,100,000	125 (char. E, H) or 250 (char. K, M)	E, H, K, M	B, C, W	F	S, T	P, R	DAL,MSI,SOA
D55342^07@2#15&	2,150,000	125 (char. E, H) or 250 (char. K, M)	E, H, K, M	B, C, W	F	S, T	P, R	DAL,MSI,SOA
	Resistance	Power	Char.	Term.	Res. Tol./	Level 1	Level 2	
Part Number	Value (Ohms)	Rating (mW)	(^)	Type (@)	Multiplier (#)	FRL (&)	FRL (&)	Manufacturer
D55342^07@2#20&	2,200,000	125 (char. E, H) or 250 (char. K, M)	E, H, K, M	B, C, W	T, L, P	S, T	P, R	DAL,MSI,SOA
D55342^07@2#21&	2,210,000	125 (char. E, H) or 250 (char. K, M)	E, H, K, M	B, C, W	F	S, T	P, R	DAL,MSI,SOA
D55342^07@2#26&	2,260,000	125 (char. E, H) or 250 (char. K, M)	E, H, K, M	B, C, W	F	S, T	P, R	DAL,MSI,SOA
D55342^07@2#32&	2,320,000	125 (char. E, H) or 250 (char. K, M)	E, H, K, M	B, C, W	F	S, T	P, R	DAL,MSI,SOA
D55342^07@2#37&	2,370,000	125 (char. E, H) or 250 (char. K, M)	E, H, K, M	B, C, W	F	S, T	P, R	DAL,MSI,SOA
D55342^07@2#40&	2,400,000	125 (char. E, H) or 250 (char. K, M)	E, H, K, M	B, C, W	T, L	S, T	P, R	DAL,MSI,SOA
D55342^07@2#43&	2,430,000	125 (char. E, H) or 250 (char. K, M)	E, H, K, M	B, C, W	F	S, T	P, R	DAL,MSI,SOA
D55342^07@2#49&	2,490,000	125 (char. E, H) or 250 (char. K, M)	E, H, K, M	B, C, W	F	S, T	P, R	DAL,MSI,SOA
D55342^07@2#55&	2,550,000	125 (char. E, H) or 250 (char. K, M)	E, H, K, M	B, C, W	F	S, T	P, R	DAL,MSI,SOA
	Resistance	Power	Char.	Term.	Res. Tol./	Level 1	Level 2	
Part Number	Value (Ohms)	Rating (mW)	(^)	Type (@)	Multiplier (#)	FRL (&)	FRL (&)	Manufacturer
D55342^07@2#61&	2,610,000	125 (char. E, H) or 250 (char. K, M)	E, H, K, M	B, C, W	F	S, T	P, R	DAL,MSI,SOA
D55342^07@2#67&	2,670,000	125 (char. E, H) or 250 (char. K, M)	E, H, K, M	B, C, W	F	S, T	P, R	DAL,MSI,SOA
D55342^07@2#70&	2,700,000	125 (char. E, H) or 250 (char. K, M)	E, H, K, M	B, C, W	T, L, P	S, T	P, R	DAL,MSI,SOA
D55342^07@2#74&	2,740,000	125 (char. E, H) or 250 (char. K, M)	E, H, K, M	B, C, W	F	S, T	P, R	DAL,MSI,SOA
D55342^07@2#80&	2,800,000	125 (char. E, H) or 250 (char. K, M)	E, H, K, M	B, C, W	F	S, T	P, R	DAL,MSI,SOA
D55342^07@2#87&	2,870,000	125 (char. E, H) or 250 (char. K, M)	E, H, K, M	B, C, W	F	S, T	P, R	DAL,MSI,SOA
D55342^07@2#94&	2,940,000	125 (char. E, H) or 250 (char. K, M)	E, H, K, M	B, C, W	F	S, T	P, R	DAL,MSI,SOA
D55342^07@3#00&	3,000,000	125 (char. E, H) or 250 (char. K, M)	E, H, K, M	B, C, W	T, L	S, T	P, R	DAL,MSI,SOA
D55342^07@3#01&	3,010,000	125 (char. E, H) or 250 (char. K, M)	E, H, K, M	B, C, W	F	S, T	P, R	DAL,MSI,SOA
	Resistance	Power	Char.	Term.	Res. Tol./	Level 1	Level 2	
Part Number	Value (Ohms)	Rating (mW)	(^)	Type (@)	Multiplier (#)	FRL (&)	FRL (&)	Manufacturer
D55342^07@3#09&	3,090,000	125 (char. E, H) or 250 (char. K, M)	E, H, K, M	B, C, W	F	S, T	P, R	DAL,MSI,SOA
D55342^07@3#16&	3,160,000	125 (char. E, H) or 250 (char. K, M)	E, H, K, M	B, C, W	F	S, T	P, R	DAL,MSI,SOA
D55342^07@3#24&	3,240,000	125 (char. E, H) or 250 (char. K, M)	E, H, K, M	B, C, W	F	S, T	P, R	DAL,MSI,SOA
D55342^07@3#30&	3,300,000	125 (char. E, H) or 250 (char. K, M)	E, H, K, M	B, C, W	T, L, P	S, T	P, R	DAL,MSI,SOA
D55342^07@3#32&	3,320,000	125 (char. E, H) or 250 (char. K, M)	E, H, K, M	B, C, W	F	S, T	P, R	DAL,MSI,SOA
D55342^07@3#40&	3,400,000	125 (char. E, H) or 250 (char. K, M)	E, H, K, M	B, C, W	F	S, T	P, R	DAL,MSI,SOA
D55342^07@3#48&	3,480,000	125 (char. E, H) or 250 (char. K, M)	E, H, K, M	B, C, W	F	S, T	P, R	DAL,MSI,SOA
D55342^07@3#57&	3,570,000	125 (char. E, H) or 250 (char. K, M)	E, H, K, M	B, C, W	F	S, T	P, R	DAL,MSI,SOA
D55342^07@3#60&	3,600,000	125 (char. E, H) or 250 (char. K, M)	E, H, K, M	B, C, W	T, L	S, T	P, R	DAL,MSI,SOA
	Resistance	Power	Char.	Term.	Res. Tol./	Level 1	Level 2	
Part Number	Value (Ohms)	Rating (mW)	(^)	Type (@)	Multiplier (#)	FRL (&)	FRL (&)	Manufacturer
D55342^07@3#65&	3,650,000	125 (char. E, H) or 250 (char. K, M)	E, H, K, M	B, C, W	F	S, T	P, R	DAL,MSI,SOA
D55342^07@3#74&	3,740,000	125 (char. E, H) or 250 (char. K, M)	E, H, K, M	B, C, W	F	S, T	P, R	DAL,MSI,SOA
D55342^07@3#83&	3,830,000	125 (char. E, H) or 250 (char. K, M)	E, H, K, M	B, C, W	F	S, T	P, R	DAL,MSI,SOA

D55342^07@3#90&	3,900,000	125 (char. E, H) or 250 (char. K, M)	E, H, K, M	B, C, W	T, L, P	S, T	P, R	DAL,MSI,SOA
D55342^07@3#92&	3,920,000	125 (char. E, H) or 250 (char. K, M)	E, H, K, M	B, C, W	F	S, T	P, R	DAL,MSI,SOA
D55342^07@4#02&	4,020,000	125 (char. E, H) or 250 (char. K, M)	E, H, K, M	B, C, W	F	S, T	P, R	DAL,MSI,SOA
D55342^07@4#12&	4,120,000	125 (char. E, H) or 250 (char. K, M)	E, H, K, M	B, C, W	F	S, T	P, R	DAL,MSI,SOA
D55342^07@4#22&	4,220,000	125 (char. E, H) or 250 (char. K, M)	E, H, K, M	B, C, W	F	S, T	P, R	DAL,MSI,SOA
D55342^07@4#30&	4,300,000	125 (char. E, H) or 250 (char. K, M)	E, H, K, M	B, C, W	T, L	S, T	P, R	DAL,MSI,SOA
	Resistance	Power	Char.	Term.	Res. Tol./	Level 1	Level 2	
Part Number	Value (Ohms)	Rating (mW)	(^)	Type (@)	Multiplier (#)	FRL (&)	FRL (&)	Manufacturer
D55342^07@4#32&	4,320,000	125 (char. E, H) or 250 (char. K, M)	E, H, K, M	B, C, W	F	S, T	P, R	DAL,MSI,SOA
D55342^07@4#42&	4,420,000	125 (char. E, H) or 250 (char. K, M)	E, H, K, M	B, C, W	F	S, T	P, R	DAL,MSI,SOA
D55342^07@4#53&	4,530,000	125 (char. E, H) or 250 (char. K, M)	E, H, K, M	B, C, W	F	S, T	P, R	DAL,MSI,SOA
D55342^07@4#64&	4,640,000	125 (char. E, H) or 250 (char. K, M)	E, H, K, M	B, C, W	F	S, T	P, R	DAL,MSI,SOA
D55342^07@4#70&	4,700,000	125 (char. E, H) or 250 (char. K, M)	E, H, K, M	B, C, W	T, L, P	S, T	P, R	DAL,MSI,SOA
D55342^07@4#75&	4,750,000	125 (char. E, H) or 250 (char. K, M)	E, H, K, M	B, C, W	F	S, T	P, R	DAL,MSI,SOA
D55342^07@4#87&	4,870,000	125 (char. E, H) or 250 (char. K, M)	E, H, K, M	B, C, W	F	S, T	P, R	DAL,MSI,SOA
D55342^07@4#99&	4,990,000	125 (char. E, H) or 250 (char. K, M)	E, H, K, M	B, C, W	F	S, T	P, R	DAL,MSI,SOA
D55342^07@5#10&	5,100,000	125 (char. E, H) or 250 (char. K, M)	E, H, K, M	B, C, W	T, L	S, T	P, R	DAL,MSI,SOA
	Resistance	Power	Char.	Term.	Res. Tol./	Level 1	Level 2	
Part Number	Value (Ohms)	Rating (mW)	(^)	Type (@)	Multiplier (#)	FRL (&)	FRL (&)	Manufacturer
D55342^07@5#11&	5,110,000	125 (char. E, H) or 250 (char. K, M)	E, H, K, M	B, C, W	F	S, T	P, R	DAL,MSI,SOA
D55342^07@5#23&	5,230,000	125 (char. E, H) or 250 (char. K, M)	E, H, K, M	B, C, W	F	S, T	P, R	DAL,MSI,SOA
D55342^07@5#36&	5,360,000	125 (char. E, H) or 250 (char. K, M)	E, H, K, M	B, C, W	F	S, T	P, R	DAL,MSI,SOA
D55342^07@5#49&	5,490,000	125 (char. E, H) or 250 (char. K, M)	E, H, K, M	B, C, W	F	S, T	P, R	DAL,MSI,SOA
D55342^07@5#60&	5,600,000	125 (char. E, H) or 250 (char. K, M)	E, H, K, M	B, C, W	T, L, P	S, T	P, R	DAL,MSI,SOA
D55342^07@5#62&	5,620,000	125 (char. E, H) or 250 (char. K, M)	E, H, K, M	B, C, W	F	S, T	P, R	DAL
	Resistance	Power	Char.	Term.	Res. Tol./	Level 1	Level 2	
Part Number	Value (Ohms)	Rating (mW)	(^)	Type (@)	Multiplier (#)	FRL (&)	FRL (&)	Manufacturer

MIL-PRF-55342/4 (RM1505) Film Chip Resistors

5.60 Ohms Through 4,700,000 Ohms

	Resistance	Power	Char.	Term.	Resistance Tol./	Level 1	Level 2	
Part Number	Value (Ohms)	Rating (mW)	(^)	Type (@)	Multiplier (#)	FRL (&)	FRL (&)	Manufacturer
M55342^04@5#60&	5.60	100 (char. E, H) or 150 (char. K, M)	E, H, K, M	B, C, W	G, J, M	S	P, R	DAL,MSI,SOA
M55342^04@5#62&	5.62	100 (char. E, H) or 150 (char. K, M)	E, H, K, M	B, C, W	D	S	P, R	DAL,MSI,SOA
M55342^04@5#76&	5.76	100 (char. E, H) or 150 (char. K, M)	E, H, K, M	B, C, W	D	S	P, R	DAL,MSI,SOA
M55342^04@5#90&	5.90	100 (char. E, H) or 150 (char. K, M)	E, H, K, M	B, C, W	D	S	P, R	DAL,MSI,SOA
M55342^04@6#04&	6.04	100 (char. E, H) or 150 (char. K, M)	E, H, K, M	B, C, W	D	S	P, R	DAL,MSI,SOA
M55342^04@6#19&	6.19	100 (char. E, H) or 150 (char. K, M)	E, H, K, M	B, C, W	D	S	P, R	DAL,MSI,SOA
M55342^04@6#20&	6.20	100 (char. E, H) or 150 (char. K, M)	E, H, K, M	B, C, W	G, J	S	P, R	DAL,MSI,SOA
M55342^04@6#34&	6.34	100 (char. E, H) or 150 (char. K, M)	E, H, K, M	B, C, W	D	S	P, R	DAL,MSI,SOA
M55342^04@6#49&	6.49	100 (char. E, H) or 150 (char. K, M)	E, H, K, M	B, C, W	D	S	P, R	DAL,MSI,SOA
M55342^04@6#65&	6.65	100 (char. E, H) or 150 (char. K, M)	E, H, K, M	B, C, W	D	S	P, R	DAL,MSI,SOA
M55342^04@6#80&	6.80	100 (char. E, H) or 150 (char. K, M)	E, H, K, M	B, C, W	G, J, M	S	P, R	DAL,MSI,SOA
M55342^04@6#81&	6.81	100 (char. E, H) or 150 (char. K, M)	E, H, K, M	B, C, W	D	S	P, R	DAL,MSI,SOA

M55342^04@6#98&	6.98	100 (char. E, H) or 150 (char. K, M)	E, H, K, M	B, C, W	D	S	P, R	DAL,MSI,SOA
M55342^04@7#15&	7.15	100 (char. E, H) or 150 (char. K, M)	E, H, K, M	B, C, W	D	S	P, R	DAL,MSI,SOA
M55342^04@7#32&	7.32	100 (char. E, H) or 150 (char. K, M)	E, H, K, M	B, C, W	D	S	P, R	DAL,MSI,SOA
M55342^04@7#50&	7.50	100 (char. E, H) or 150 (char. K, M)	E, H, K, M	B, C, W	D, G, J	S	P, R	DAL,MSI,SOA
M55342^04@7#68&	7.68	100 (char. E, H) or 150 (char. K, M)	E, H, K, M	B, C, W	D	S	P, R	DAL,MSI,SOA
M55342^04@7#87&	7.87	100 (char. E, H) or 150 (char. K, M)	E, H, K, M	B, C, W	D	S	P, R	DAL,MSI,SOA
M55342^04@8#06&	8.06	100 (char. E, H) or 150 (char. K, M)	E, H, K, M	B, C, W	D	S	P, R	DAL,MSI,SOA
M55342^04@8#20&	8.20	100 (char. E, H) or 150 (char. K, M)	E, H, K, M	B, C, W	G, J, M	S	P, R	DAL,MSI,SOA
M55342^04@8#25&	8.25	100 (char. E, H) or 150 (char. K, M)	E, H, K, M	B, C, W	D	S	P, R	DAL,MSI,SOA
M55342^04@8#45&	8.45	100 (char. E, H) or 150 (char. K, M)	E, H, K, M	B, C, W	D	S	P, R	DAL,MSI,SOA
M55342^04@8#66&	8.66	100 (char. E, H) or 150 (char. K, M)	E, H, K, M	B, C, W	D	S	P, R	DAL,MSI,SOA
M55342^04@8#87&	8.87	100 (char. E, H) or 150 (char. K, M)	E, H, K, M	B, C, W	D	S	P, R	DAL,MSI,SOA
M55342^04@9#09&	9.09	100 (char. E, H) or 150 (char. K, M)	E, H, K, M	B, C, W	D	S	P, R	DAL,MSI,SOA
M55342^04@9#10&	9.10	100 (char. E, H) or 150 (char. K, M)	E, H, K, M	B, C, W	G, J	S	P, R	DAL,MSI,SOA
M55342^04@9#31&	9.31	100 (char. E, H) or 150 (char. K, M)	E, H, K, M	B, C, W	D	S	P, R	DAL,MSI,SOA
M55342^04@9#53&	9.53	100 (char. E, H) or 150 (char. K, M)	E, H, K, M	B, C, W	D	S	P, R	DAL,MSI,SOA
M55342^04@9#76&	9.76	100 (char. E, H) or 150 (char. K, M)	E, H, K, M	B, C, W	D	S	P, R	DAL,MSI,SOA
M55342^04@10#0&	10.0	100 (char. E, H) or 150 (char. K, M)	E, H, K, M	B, C, W	D, G, J, M	S	P, R	DAL,MSI,SOA
M55342^04@10#2&	10.2	100 (char. E, H) or 150 (char. K, M)	E, H, K, M	B, C, W	D	S	P, R	DAL,MSI,SOA
M55342^04@10#5&	10.5	100 (char. E, H) or 150 (char. K, M)	E, H, K, M	B, C, W	D	S	P, R	DAL,MSI,SOA
M55342^04@10#7&	10.7	100 (char. E, H) or 150 (char. K, M)	E, H, K, M	B, C, W	D	S	P, R	DAL,MSI,SOA
M55342^04@11#0&	11.0	100 (char. E, H) or 150 (char. K, M)	E, H, K, M	B, C, W	D, G, J	S	P, R	DAL,MSI,SOA
M55342^04@11#3&	11.3	100 (char. E, H) or 150 (char. K, M)	E, H, K, M	B, C, W	D	S	P, R	DAL,MSI,SOA
M55342^04@11#5&	11.5	100 (char. E, H) or 150 (char. K, M)	E, H, K, M	B, C, W	D	S	P, R	DAL,MSI,SOA
M55342^04@11#8&	11.8	100 (char. E, H) or 150 (char. K, M)	E, H, K, M	B, C, W	D	S	P, R	DAL,MSI,SOA
M55342^04@12#0&	12.0	100 (char. E, H) or 150 (char. K, M)	E, H, K, M	B, C, W	G, J, M	S	P, R	DAL,MSI,SOA
M55342^04@12#1&	12.1	100 (char. E, H) or 150 (char. K, M)	E, H, K, M	B, C, W	D	S	P, R	DAL,MSI,SOA
M55342^04@12#4&	12.4	100 (char. E, H) or 150 (char. K, M)	E, H, K, M	B, C, W	D	S	P, R	DAL,MSI,SOA
M55342^04@12#7&	12.7	100 (char. E, H) or 150 (char. K, M)	E, H, K, M	B, C, W	D	S	P, R	DAL,MSI,SOA
M55342^04@13#0&	13.0	100 (char. E, H) or 150 (char. K, M)	E, H, K, M	B, C, W	D, G, J	S	P, R	DAL,MSI,SOA
M55342^04@13#3&	13.3	100 (char. E, H) or 150 (char. K, M)	E, H, K, M	B, C, W	D	S	P, R	DAL,MSI,SOA
M55342^04@13#7&	13.7	100 (char. E, H) or 150 (char. K, M)	E, H, K, M	B, C, W	D	S	P, R	DAL,MSI,SOA
M55342^04@14#0&	14.0	100 (char. E, H) or 150 (char. K, M)	E, H, K, M	B, C, W	D	S	P, R	DAL,MSI,SOA
M55342^04@14#3&	14.3	100 (char. E, H) or 150 (char. K, M)	E, H, K, M	B, C, W	D	S	P, R	DAL,MSI,SOA
M55342^04@14#7&	14.7	100 (char. E, H) or 150 (char. K, M)	E, H, K, M	B, C, W	D	S	P, R	DAL,MSI,SOA
M55342^04@15#0&	15.0	100 (char. E, H) or 150 (char. K, M)	E, H, K, M	B, C, W	D, G, J, M	S	P, R	DAL,MSI,SOA
M55342^04@15#4&	15.4	100 (char. E, H) or 150 (char. K, M)	E, H, K, M	B, C, W	D	S	P, R	DAL,MSI,SOA
M55342^04@15#8&	15.8	100 (char. E, H) or 150 (char. K, M)	E, H, K, M	B, C, W	D	S	P, R	DAL,MSI,SOA
M55342^04@16#0&	16.0	100 (char. E, H) or 150 (char. K, M)	E, H, K, M	B, C, W	G, J	S	P, R	DAL,MSI,SOA
M55342^04@16#2&	16.2	100 (char. E, H) or 150 (char. K, M)	E, H, K, M	B, C, W	D	S	P, R	DAL,MSI,SOA
M55342^04@16#5&	16.5	100 (char. E, H) or 150 (char. K, M)	E, H, K, M	B, C, W	D	S	P, R	DAL,MSI,SOA
M55342^04@16#9&	16.9	100 (char. E, H) or 150 (char. K, M)	E, H, K, M	B, C, W	D	S	P, R	DAL,MSI,SOA
M55342^04@17#4&	17.4	100 (char. E, H) or 150 (char. K, M)	E, H, K, M	B, C, W	D	S	P, R	DAL,MSI,SOA
M55342^04@17#8&	17.8	100 (char. E, H) or 150 (char. K, M)	E, H, K, M	B, C, W	D	S	P, R	DAL,MSI,SOA
M55342^04@18#0&	18.0	100 (char. E, H) or 150 (char. K, M)	E, H, K, M	B, C, W	G, J, M	S	P, R	DAL,MSI,SOA
M55342^04@18#2&	18.2	100 (char. E, H) or 150 (char. K, M)	E, H, K, M	B, C, W	D	S	P, R	DAL,MSI,SOA
M55342^04@18#7&	18.7	100 (char. E, H) or 150 (char. K, M)	E, H, K, M	B, C, W	D	S	P, R	DAL,MSI,SOA

M55342^04@19#1&	19.1	100 (char. E, H) or 150 (char. K, M)	E, H, K, M	B, C, W	D	S	P, R	DAL,MSI,SOA
M55342^04@19#6&	19.6	100 (char. E, H) or 150 (char. K, M)	E, H, K, M	B, C, W	D	S	P, R	DAL,MSI,SOA
M55342^04@20#0&	20.0	100 (char. E, H) or 150 (char. K, M)	E, H, K, M	B, C, W	D, G, J, M	S	P, R	DAL,MSI,OHM,SOA
M55342^04@20#5&	20.5	100 (char. E, H) or 150 (char. K, M)	E, H, K, M	B, C, W	D	S	P, R	DAL,MSI,OHM,SOA
M55342^04@21#0&	21.0	100 (char. E, H) or 150 (char. K, M)	E, H, K, M	B, C, W	D	S	P, R	DAL,MSI,OHM,SOA
M55342^04@21#5&	21.5	100 (char. E, H) or 150 (char. K, M)	E, H, K, M	B, C, W	D	S	P, R	DAL,MSI,OHM,SOA
M55342^04@22#0&	22.0	100 (char. E, H) or 150 (char. K, M)	E, H, K, M	B, C, W	G, J, M	S	P, R	DAL,MSI,OHM,SOA
M55342^04@22#1&	22.1	100 (char. E, H) or 150 (char. K, M)	E, H, K, M	B, C, W	D	S	P, R	DAL,MSI,OHM,SOA
M55342^04@22#6&	22.6	100 (char. E, H) or 150 (char. K, M)	E, H, K, M	B, C, W	D	S	P, R	DAL,MSI,OHM,SOA
M55342^04@23#2&	23.2	100 (char. E, H) or 150 (char. K, M)	E, H, K, M	B, C, W	D	S	P, R	DAL,MSI,OHM,SOA
M55342^04@23#7&	23.7	100 (char. E, H) or 150 (char. K, M)	E, H, K, M	B, C, W	D	S	P, R	DAL,MSI,OHM,SOA
M55342^04@24#0&	24.0	100 (char. E, H) or 150 (char. K, M)	E, H, K, M	B, C, W	G, J	S	P, R	DAL,MSI,OHM,SOA
M55342^04@24#3&	24.3	100 (char. E, H) or 150 (char. K, M)	E, H, K, M	B, C, W	D	S	P, R	DAL,MSI,OHM,SOA
M55342^04@24#9&	24.9	100 (char. E, H) or 150 (char. K, M)	E, H, K, M	B, C, W	D	S	P, R	DAL,MSI,OHM,SOA
M55342^04@25#5&	25.5	100 (char. E, H) or 150 (char. K, M)	E, H, K, M	B, C, W	D	S	P, R	DAL,MSI,OHM,SOA
M55342^04@26#1&	26.1	100 (char. E, H) or 150 (char. K, M)	E, H, K, M	B, C, W	D	S	P, R	DAL,MSI,OHM,SOA
M55342^04@26#7&	26.7	100 (char. E, H) or 150 (char. K, M)	E, H, K, M	B, C, W	D	S	P, R	DAL,MSI,OHM,SOA
M55342^04@27#0&	27.0	100 (char. E, H) or 150 (char. K, M)	E, H, K, M	B, C, W	G, J, M	S	P, R	DAL,MSI,OHM,SOA
M55342^04@27#4&	27.4	100 (char. E, H) or 150 (char. K, M)	E, H, K, M	B, C, W	D	S	P, R	DAL,MSI,OHM,SOA
M55342^04@28#0&	28.0	100 (char. E, H) or 150 (char. K, M)	E, H, K, M	B, C, W	D	S	P, R	DAL,MSI,OHM,SOA
M55342^04@28#7&	28.7	100 (char. E, H) or 150 (char. K, M)	E, H, K, M	B, C, W	D	S	P, R	DAL,MSI,OHM,SOA
M55342^04@29#4&	29.4	100 (char. E, H) or 150 (char. K, M)	E, H, K, M	B, C, W	D	S	P, R	DAL,MSI,OHM,SOA
M55342^04@30#0&	30.0	100 (char. E, H) or 150 (char. K, M)	E, H, K, M	B, C, W	G, J	S	P, R	DAL,MSI,OHM,SOA
M55342^04@30#1&	30.1	100 (char. E, H) or 150 (char. K, M)	E, H, K, M	B, C, W	D	S	P, R	DAL,MSI,OHM,SOA
M55342^04@30#9&	30.9	100 (char. E, H) or 150 (char. K, M)	E, H, K, M	B, C, W	D	S	P, R	DAL,MSI,OHM,SOA
M55342^04@31#6&	31.6	100 (char. E, H) or 150 (char. K, M)	E, H, K, M	B, C, W	D	S	P, R	DAL,MSI,OHM,SOA
M55342^04@32#4&	32.4	100 (char. E, H) or 150 (char. K, M)	E, H, K, M	B, C, W	D	S	P, R	DAL,MSI,OHM,SOA
M55342^04@33#0&	33.0	100 (char. E, H) or 150 (char. K, M)	E, H, K, M	B, C, W	G, J, M	S	P, R	DAL,MSI,OHM,SOA
M55342^04@33#2&	33.2	100 (char. E, H) or 150 (char. K, M)	E, H, K, M	B, C, W	D	S	P, R	DAL,MSI,OHM,SOA
M55342^04@34#0&	34.0	100 (char. E, H) or 150 (char. K, M)	E, H, K, M	B, C, W	D	S	P, R	DAL,MSI,OHM,SOA
M55342^04@34#8&	34.8	100 (char. E, H) or 150 (char. K, M)	E, H, K, M	B, C, W	D	S	P, R	DAL,MSI,OHM,SOA
M55342^04@35#7&	35.7	100 (char. E, H) or 150 (char. K, M)	E, H, K, M	B, C, W	D	S	P, R	DAL,MSI,OHM,SOA
M55342^04@36#0&	36.0	100 (char. E, H) or 150 (char. K, M)	E, H, K, M	B, C, W	G, J	S	P, R	DAL,MSI,OHM,SOA
M55342^04@36#5&	36.5	100 (char. E, H) or 150 (char. K, M)	E, H, K, M	B, C, W	D	S	P, R	DAL,MSI,OHM,SOA
M55342^04@37#4&	37.4	100 (char. E, H) or 150 (char. K, M)	E, H, K, M	B, C, W	D	S	P, R	DAL,MSI,OHM,SOA
M55342^04@38#3&	38.3	100 (char. E, H) or 150 (char. K, M)	E, H, K, M	B, C, W	D	S	P, R	DAL,MSI,OHM,SOA
M55342^04@39#0&	39.0	100 (char. E, H) or 150 (char. K, M)	E, H, K, M	B, C, W	G, J, M	S	P, R	DAL,MSI,OHM,SOA
M55342^04@39#2&	39.2	100 (char. E, H) or 150 (char. K, M)	E, H, K, M	B, C, W	D	S	P, R	DAL,MSI,OHM,SOA
M55342^04@40#2&	40.2	100 (char. E, H) or 150 (char. K, M)	E, H, K, M	B, C, W	D	S	P, R	DAL,MSI,OHM,SOA
M55342^04@41#2&	41.2	100 (char. E, H) or 150 (char. K, M)	E, H, K, M	B, C, W	D	S	P, R	DAL,MSI,OHM,SOA
M55342^04@42#2&	42.2	100 (char. E, H) or 150 (char. K, M)	E, H, K, M	B, C, W	D	S	P, R	DAL,MSI,OHM,SOA
M55342^04@43#0&	43.0	100 (char. E, H) or 150 (char. K, M)	E, H, K, M	B, C, W	G, J	S	P, R	DAL,MSI,OHM,SOA
M55342^04@43#2&	43.2	100 (char. E, H) or 150 (char. K, M)	E, H, K, M	B, C, W	D	S	P, R	DAL,MSI,OHM,SOA
M55342^04@44#2&	44.2	100 (char. E, H) or 150 (char. K, M)	E, H, K, M	B, C, W	D	S	P, R	DAL,MSI,OHM,SOA
M55342^04@45#3&	45.3	100 (char. E, H) or 150 (char. K, M)	E, H, K, M	B, C, W	D	S	P, R	DAL,MSI,OHM,SOA
M55342^04@46#4&	46.4	100 (char. E, H) or 150 (char. K, M)	E, H, K, M	B, C, W	D	S	P, R	DAL,MSI,OHM,SOA
M55342^04@47#0&	47.0	100 (char. E, H) or 150 (char. K, M)	E, H, K, M	B, C, W	G, J, M	S	P, R	DAL,MSI,OHM,SOA

M55342^04@47#5&	47.5	100 (char. E, H) or 150 (char. K, M)	E, H, K, M	B, C, W	D	S	P, R	DAL,MSI,OHM,SOA
M55342^04@48#7&	48.7	100 (char. E, H) or 150 (char. K, M)	E, H, K, M	B, C, W	D	S	P, R	DAL,MSI,OHM,SOA
M55342^04@49#9&	49.9	100 (char. E, H) or 150 (char. K, M)	E, H, K, M	B, C, W	D	S	P, R	DAL,MSI,OHM,SOA
M55342^04@51#0&	51.0	100 (char. E, H) or 150 (char. K, M)	E, H, K, M	B, C, W	G, J	S	P, R	DAL,MSI,OHM,SOA
M55342^04@51#1&	51.1	100 (char. E, H) or 150 (char. K, M)	E, H, K, M	B, C, W	D	S	P, R	DAL,MSI,OHM,SOA
M55342^04@52#3&	52.3	100 (char. E, H) or 150 (char. K, M)	E, H, K, M	B, C, W	D	S	P, R	DAL,MSI,OHM,SOA
M55342^04@53#6&	53.6	100 (char. E, H) or 150 (char. K, M)	E, H, K, M	B, C, W	D	S	P, R	DAL,MSI,OHM,SOA
M55342^04@54#9&	54.9	100 (char. E, H) or 150 (char. K, M)	E, H, K, M	B, C, W	D	S	P, R	DAL,MSI,OHM,SOA
M55342^04@56#0&	56.0	100 (char. E, H) or 150 (char. K, M)	E, H, K, M	B, C, W	G, J, M	S	P, R	DAL,MSI,OHM,SOA
M55342^04@56#2&	56.2	100 (char. E, H) or 150 (char. K, M)	E, H, K, M	B, C, W	D	S	P, R	DAL,MSI,OHM,SOA
M55342^04@57#6&	57.6	100 (char. E, H) or 150 (char. K, M)	E, H, K, M	B, C, W	D	S	P, R	DAL,MSI,OHM,SOA
M55342^04@59#0&	59.0	100 (char. E, H) or 150 (char. K, M)	E, H, K, M	B, C, W	D	S	P, R	DAL,MSI,OHM,SOA
M55342^04@60#4&	60.4	100 (char. E, H) or 150 (char. K, M)	E, H, K, M	B, C, W	D	S	P, R	DAL,MSI,OHM,SOA
M55342^04@61#9&	61.9	100 (char. E, H) or 150 (char. K, M)	E, H, K, M	B, C, W	D	S	P, R	DAL,MSI,OHM,SOA
M55342^04@62#0&	62.0	100 (char. E, H) or 150 (char. K, M)	E, H, K, M	B, C, W	G, J	S	P, R	DAL,MSI,OHM,SOA
M55342^04@63#4&	63.4	100 (char. E, H) or 150 (char. K, M)	E, H, K, M	B, C, W	D	S	P, R	DAL,MSI,OHM,SOA
M55342^04@64#9&	64.9	100 (char. E, H) or 150 (char. K, M)	E, H, K, M	B, C, W	D	S	P, R	DAL,MSI,OHM,SOA
M55342^04@66#5&	66.5	100 (char. E, H) or 150 (char. K, M)	E, H, K, M	B, C, W	D	S	P, R	DAL,MSI,OHM,SOA
M55342^04@68#0&	68.0	100 (char. E, H) or 150 (char. K, M)	E, H, K, M	B, C, W	G, J, M	S	P, R	DAL,MSI,OHM,SOA
M55342^04@68#1&	68.1	100 (char. E, H) or 150 (char. K, M)	E, H, K, M	B, C, W	D	S	P, R	DAL,MSI,OHM,SOA
M55342^04@69#8&	69.8	100 (char. E, H) or 150 (char. K, M)	E, H, K, M	B, C, W	D	S	P, R	DAL,MSI,OHM,SOA
M55342^04@71#5&	71.5	100 (char. E, H) or 150 (char. K, M)	E, H, K, M	B, C, W	D	S	P, R	DAL,MSI,OHM,SOA
M55342^04@73#2&	73.2	100 (char. E, H) or 150 (char. K, M)	E, H, K, M	B, C, W	D	S	P, R	DAL,MSI,OHM,SOA
M55342^04@75#0&	75.0	100 (char. E, H) or 150 (char. K, M)	E, H, K, M	B, C, W	D, G, J	S	P, R	DAL,MSI,OHM,SOA
M55342^04@76#8&	76.8	100 (char. E, H) or 150 (char. K, M)	E, H, K, M	B, C, W	D	S	P, R	DAL,MSI,OHM,SOA
M55342^04@78#7&	78.7	100 (char. E, H) or 150 (char. K, M)	E, H, K, M	B, C, W	D	S	P, R	DAL,MSI,OHM,SOA
M55342^04@80#6&	80.6	100 (char. E, H) or 150 (char. K, M)	E, H, K, M	B, C, W	D	S	P, R	DAL,MSI,OHM,SOA
M55342^04@82#0&	82.0	100 (char. E, H) or 150 (char. K, M)	E, H, K, M	B, C, W	G, J, M	S	P, R	DAL,MSI,OHM,SOA
M55342^04@82#5&	82.5	100 (char. E, H) or 150 (char. K, M)	E, H, K, M	B, C, W	D	S	P, R	DAL,MSI,OHM,SOA
M55342^04@84#5&	84.5	100 (char. E, H) or 150 (char. K, M)	E, H, K, M	B, C, W	D	S	P, R	DAL,MSI,OHM,SOA
M55342^04@86#6&	86.6	100 (char. E, H) or 150 (char. K, M)	E, H, K, M	B, C, W	D	S	P, R	DAL,MSI,OHM,SOA
M55342^04@88#7&	88.7	100 (char. E, H) or 150 (char. K, M)	E, H, K, M	B, C, W	D	S	P, R	DAL,MSI,OHM,SOA
M55342^04@90#9&	90.9	100 (char. E, H) or 150 (char. K, M)	E, H, K, M	B, C, W	D	S	P, R	DAL,MSI,OHM,SOA
M55342^04@91#0&	91.0	100 (char. E, H) or 150 (char. K, M)	E, H, K, M	B, C, W	G, J	S	P, R	DAL,MSI,OHM,SOA
M55342^04@93#1&	93.1	100 (char. E, H) or 150 (char. K, M)	E, H, K, M	B, C, W	D	S	P, R	DAL,MSI,OHM,SOA
M55342^04@95#3&	95.3	100 (char. E, H) or 150 (char. K, M)	E, H, K, M	B, C, W	D	S	P, R	DAL,MSI,OHM,SOA
M55342^04@97#6&	97.6	100 (char. E, H) or 150 (char. K, M)	E, H, K, M	B, C, W	D	S	P, R	DAL,MSI,OHM,SOA
M55342^04@100#&	100	100 (char. E, H) or 150 (char. K, M)	E, H, K, M	B, C, W	D, G, J, M	S	P, R	DAL,MSI,OHM,SOA
M55342^04@102#&	102	100 (char. E, H) or 150 (char. K, M)	E, H, K, M	B, C, W	D	S	P, R	DAL,MSI,OHM,SOA
M55342^04@105#&	105	100 (char. E, H) or 150 (char. K, M)	E, H, K, M	B, C, W	D	S	P, R	DAL,MSI,OHM,SOA
M55342^04@107#&	107	100 (char. E, H) or 150 (char. K, M)	E, H, K, M	B, C, W	D	S	P, R	DAL,MSI,OHM,SOA
M55342^04@110#&	110	100 (char. E, H) or 150 (char. K, M)	E, H, K, M	B, C, W	D, G, J	S	P, R	DAL,MSI,OHM,SOA
M55342^04@113#&	113	100 (char. E, H) or 150 (char. K, M)	E, H, K, M	B, C, W	D	S	P, R	DAL,MSI,OHM,SOA
M55342^04@115#&	115	100 (char. E, H) or 150 (char. K, M)	E, H, K, M	B, C, W	D	S	P, R	DAL,MSI,OHM,SOA
M55342^04@118#&	118	100 (char. E, H) or 150 (char. K, M)	E, H, K, M	B, C, W	D	S	P, R	DAL,MSI,OHM,SOA
M55342^04@120#&	120	100 (char. E, H) or 150 (char. K, M)	E, H, K, M	B, C, W	G, J, M	S	P, R	DAL,MSI,OHM,SOA
M55342^04@121#&	121	100 (char. E, H) or 150 (char. K, M)	E, H, K, M	B, C, W	D	S	P, R	DAL,MSI,OHM,SOA

M55342^04@124#&	124	100 (char. E, H) or 150 (char. K, M)	E, H, K, M	B, C, W	D	S	P, R	DAL,MSI,OHM,SOA
M55342^04@127#&	127	100 (char. E, H) or 150 (char. K, M)	E, H, K, M	B, C, W	D	S	P, R	DAL,MSI,OHM,SOA
M55342^04@130#&	130	100 (char. E, H) or 150 (char. K, M)	E, H, K, M	B, C, W	D, G, J	S	P, R	DAL,MSI,OHM,SOA
M55342^04@133#&	133	100 (char. E, H) or 150 (char. K, M)	E, H, K, M	B, C, W	D	S	P, R	DAL,MSI,OHM,SOA
M55342^04@137#&	137	100 (char. E, H) or 150 (char. K, M)	E, H, K, M	B, C, W	D	S	P, R	DAL,MSI,OHM,SOA
M55342^04@140#&	140	100 (char. E, H) or 150 (char. K, M)	E, H, K, M	B, C, W	D	S	P, R	DAL,MSI,OHM,SOA
M55342^04@143#&	143	100 (char. E, H) or 150 (char. K, M)	E, H, K, M	B, C, W	D	S	P, R	DAL,MSI,OHM,SOA
M55342^04@147#&	147	100 (char. E, H) or 150 (char. K, M)	E, H, K, M	B, C, W	D	S	P, R	DAL,MSI,OHM,SOA
M55342^04@150#&	150	100 (char. E, H) or 150 (char. K, M)	E, H, K, M	B, C, W	D, G, J, M	S	P, R	DAL,MSI,OHM,SOA
M55342^04@154#&	154	100 (char. E, H) or 150 (char. K, M)	E, H, K, M	B, C, W	D	S	P, R	DAL,MSI,OHM,SOA
M55342^04@158#&	158	100 (char. E, H) or 150 (char. K, M)	E, H, K, M	B, C, W	D	S	P, R	DAL,MSI,OHM,SOA
M55342^04@160#&	160	100 (char. E, H) or 150 (char. K, M)	E, H, K, M	B, C, W	G, J	S	P, R	DAL,MSI,OHM,SOA
M55342^04@162#&	162	100 (char. E, H) or 150 (char. K, M)	E, H, K, M	B, C, W	D	S	P, R	DAL,MSI,OHM,SOA
M55342^04@165#&	165	100 (char. E, H) or 150 (char. K, M)	E, H, K, M	B, C, W	D	S	P, R	DAL,MSI,OHM,SOA
M55342^04@169#&	169	100 (char. E, H) or 150 (char. K, M)	E, H, K, M	B, C, W	D	S	P, R	DAL,MSI,OHM,SOA
M55342^04@174#&	174	100 (char. E, H) or 150 (char. K, M)	E, H, K, M	B, C, W	D	S	P, R	DAL,MSI,OHM,SOA
M55342^04@178#&	178	100 (char. E, H) or 150 (char. K, M)	E, H, K, M	B, C, W	D	S	P, R	DAL,MSI,OHM,SOA
M55342^04@180#&	180	100 (char. E, H) or 150 (char. K, M)	E, H, K, M	B, C, W	G, J, M	S	P, R	DAL,MSI,OHM,SOA
M55342^04@182#&	182	100 (char. E, H) or 150 (char. K, M)	E, H, K, M	B, C, W	D	S	P, R	DAL,MSI,OHM,SOA
M55342^04@187#&	187	100 (char. E, H) or 150 (char. K, M)	E, H, K, M	B, C, W	D	S	P, R	DAL,MSI,OHM,SOA
M55342^04@191#&	191	100 (char. E, H) or 150 (char. K, M)	E, H, K, M	B, C, W	D	S	P, R	DAL,MSI,OHM,SOA
M55342^04@196#&	196	100 (char. E, H) or 150 (char. K, M)	E, H, K, M	B, C, W	D	S	P, R	DAL,MSI,OHM,SOA
M55342^04@200#&	200	100 (char. E, H) or 150 (char. K, M)	E, H, K, M	B, C, W	D, G, J, M	S	P, R	DAL,MSI,OHM,SOA
M55342^04@205#&	205	100 (char. E, H) or 150 (char. K, M)	E, H, K, M	B, C, W	D	S	P, R	DAL,MSI,OHM,SOA
M55342^04@210#&	210	100 (char. E, H) or 150 (char. K, M)	E, H, K, M	B, C, W	D	S	P, R	DAL,MSI,OHM,SOA
M55342^04@215#&	215	100 (char. E, H) or 150 (char. K, M)	E, H, K, M	B, C, W	D	S	P, R	DAL,MSI,OHM,SOA
M55342^04@220#&	220	100 (char. E, H) or 150 (char. K, M)	E, H, K, M	B, C, W	G, J, M	S	P, R	DAL,MSI,OHM,SOA
M55342^04@221#&	221	100 (char. E, H) or 150 (char. K, M)	E, H, K, M	B, C, W	D	S	P, R	DAL,MSI,OHM,SOA
M55342^04@226#&	226	100 (char. E, H) or 150 (char. K, M)	E, H, K, M	B, C, W	D	S	P, R	DAL,MSI,OHM,SOA
M55342^04@232#&	232	100 (char. E, H) or 150 (char. K, M)	E, H, K, M	B, C, W	D	S	P, R	DAL,MSI,OHM,SOA
M55342^04@237#&	237	100 (char. E, H) or 150 (char. K, M)	E, H, K, M	B, C, W	D	S	P, R	DAL,MSI,OHM,SOA
M55342^04@240#&	240	100 (char. E, H) or 150 (char. K, M)	E, H, K, M	B, C, W	G, J	S	P, R	DAL,MSI,OHM,SOA
M55342^04@243#&	243	100 (char. E, H) or 150 (char. K, M)	E, H, K, M	B, C, W	D	S	P, R	DAL,MSI,OHM,SOA
M55342^04@249#&	249	100 (char. E, H) or 150 (char. K, M)	E, H, K, M	B, C, W	D	S	P, R	DAL,MSI,OHM,SOA
M55342^04@255#&	255	100 (char. E, H) or 150 (char. K, M)	E, H, K, M	B, C, W	D	S	P, R	DAL,MSI,OHM,SOA
M55342^04@261#&	261	100 (char. E, H) or 150 (char. K, M)	E, H, K, M	B, C, W	D	S	P, R	DAL,MSI,OHM,SOA
M55342^04@267#&	267	100 (char. E, H) or 150 (char. K, M)	E, H, K, M	B, C, W	D	S	P, R	DAL,MSI,OHM,SOA
M55342^04@270#&	270	100 (char. E, H) or 150 (char. K, M)	E, H, K, M	B, C, W	G, J, M	S	P, R	DAL,MSI,OHM,SOA
M55342^04@274#&	274	100 (char. E, H) or 150 (char. K, M)	E, H, K, M	B, C, W	D	S	P, R	DAL,MSI,OHM,SOA
M55342^04@280#&	280	100 (char. E, H) or 150 (char. K, M)	E, H, K, M	B, C, W	D	S	P, R	DAL,MSI,OHM,SOA
M55342^04@287#&	287	100 (char. E, H) or 150 (char. K, M)	E, H, K, M	B, C, W	D	S	P, R	DAL,MSI,OHM,SOA
M55342^04@294#&	294	100 (char. E, H) or 150 (char. K, M)	E, H, K, M	B, C, W	D	S	P, R	DAL,MSI,OHM,SOA
M55342^04@300#&	300	100 (char. E, H) or 150 (char. K, M)	E, H, K, M	B, C, W	G, J	S	P, R	DAL,MSI,OHM,SOA
M55342^04@301#&	301	100 (char. E, H) or 150 (char. K, M)	E, H, K, M	B, C, W	D	S	P, R	DAL,MSI,OHM,SOA
M55342^04@309#&	309	100 (char. E, H) or 150 (char. K, M)	E, H, K, M	B, C, W	D	S	P, R	DAL,MSI,OHM,SOA
M55342^04@316#&	316	100 (char. E, H) or 150 (char. K, M)	E, H, K, M	B, C, W	D	S	P, R	DAL,MSI,OHM,SOA
M55342^04@324#&	324	100 (char. E, H) or 150 (char. K, M)	E, H, K, M	B, C, W	D	S	P, R	DAL,MSI,OHM,SOA

M55342^04@330#&	330	100 (char. E, H) or 150 (char. K, M)	E, H, K, M	B, C, W	G, J, M	S	P, R	DAL,MSI,OHM,SOA
M55342^04@332#&	332	100 (char. E, H) or 150 (char. K, M)	E, H, K, M	B, C, W	D	S	P, R	DAL,MSI,OHM,SOA
M55342^04@340#&	340	100 (char. E, H) or 150 (char. K, M)	E, H, K, M	B, C, W	D	S	P, R	DAL,MSI,OHM,SOA
M55342^04@348#&	348	100 (char. E, H) or 150 (char. K, M)	E, H, K, M	B, C, W	D	S	P, R	DAL,MSI,OHM,SOA
M55342^04@357#&	357	100 (char. E, H) or 150 (char. K, M)	E, H, K, M	B, C, W	D	S	P, R	DAL,MSI,OHM,SOA
M55342^04@360#&	360	100 (char. E, H) or 150 (char. K, M)	E, H, K, M	B, C, W	G, J	S	P, R	DAL,MSI,OHM,SOA
M55342^04@365#&	365	100 (char. E, H) or 150 (char. K, M)	E, H, K, M	B, C, W	D	S	P, R	DAL,MSI,OHM,SOA
M55342^04@374#&	374	100 (char. E, H) or 150 (char. K, M)	E, H, K, M	B, C, W	D	S	P, R	DAL,MSI,OHM,SOA
M55342^04@383#&	383	100 (char. E, H) or 150 (char. K, M)	E, H, K, M	B, C, W	D	S	P, R	DAL,MSI,OHM,SOA
M55342^04@390#&	390	100 (char. E, H) or 150 (char. K, M)	E, H, K, M	B, C, W	G, J, M	S	P, R	DAL,MSI,OHM,SOA
M55342^04@392#&	392	100 (char. E, H) or 150 (char. K, M)	E, H, K, M	B, C, W	D	S	P, R	DAL,MSI,OHM,SOA
M55342^04@402#&	402	100 (char. E, H) or 150 (char. K, M)	E, H, K, M	B, C, W	D	S	P, R	DAL,MSI,OHM,SOA
M55342^04@412#&	412	100 (char. E, H) or 150 (char. K, M)	E, H, K, M	B, C, W	D	S	P, R	DAL,MSI,OHM,SOA
M55342^04@422#&	422	100 (char. E, H) or 150 (char. K, M)	E, H, K, M	B, C, W	D	S	P, R	DAL,MSI,OHM,SOA
M55342^04@430#&	430	100 (char. E, H) or 150 (char. K, M)	E, H, K, M	B, C, W	G, J	S	P, R	DAL,MSI,OHM,SOA
M55342^04@432#&	432	100 (char. E, H) or 150 (char. K, M)	E, H, K, M	B, C, W	D	S	P, R	DAL,MSI,OHM,SOA
M55342^04@442#&	442	100 (char. E, H) or 150 (char. K, M)	E, H, K, M	B, C, W	D	S	P, R	DAL,MSI,OHM,SOA
M55342^04@453#&	453	100 (char. E, H) or 150 (char. K, M)	E, H, K, M	B, C, W	D	S	P, R	DAL,MSI,OHM,SOA
M55342^04@464#&	464	100 (char. E, H) or 150 (char. K, M)	E, H, K, M	B, C, W	D	S	P, R	DAL,MSI,OHM,SOA
M55342^04@470#&	470	100 (char. E, H) or 150 (char. K, M)	E, H, K, M	B, C, W	G, J, M	S	P, R	DAL,MSI,OHM,SOA
M55342^04@475#&	475	100 (char. E, H) or 150 (char. K, M)	E, H, K, M	B, C, W	D	S	P, R	DAL,MSI,OHM,SOA
M55342^04@487#&	487	100 (char. E, H) or 150 (char. K, M)	E, H, K, M	B, C, W	D	S	P, R	DAL,MSI,OHM,SOA
M55342^04@499#&	499	100 (char. E, H) or 150 (char. K, M)	E, H, K, M	B, C, W	D	S	P, R	DAL,MSI,OHM,SOA
M55342^04@510#&	510	100 (char. E, H) or 150 (char. K, M)	E, H, K, M	B, C, W	G, J	S	P, R	DAL,MSI,OHM,SOA
M55342^04@511#&	511	100 (char. E, H) or 150 (char. K, M)	E, H, K, M	B, C, W	D	S	P, R	DAL,MSI,OHM,SOA
M55342^04@523#&	523	100 (char. E, H) or 150 (char. K, M)	E, H, K, M	B, C, W	D	S	P, R	DAL,MSI,OHM,SOA
M55342^04@536#&	536	100 (char. E, H) or 150 (char. K, M)	E, H, K, M	B, C, W	D	S	P, R	DAL,MSI,OHM,SOA
M55342^04@549#&	549	100 (char. E, H) or 150 (char. K, M)	E, H, K, M	B, C, W	D	S	P, R	DAL,MSI,OHM,SOA
M55342^04@560#&	560	100 (char. E, H) or 150 (char. K, M)	E, H, K, M	B, C, W	G, J, M	S	P, R	DAL,MSI,OHM,SOA
M55342^04@562#&	562	100 (char. E, H) or 150 (char. K, M)	E, H, K, M	B, C, W	D	S	P, R	DAL,MSI,OHM,SOA
M55342^04@576#&	576	100 (char. E, H) or 150 (char. K, M)	E, H, K, M	B, C, W	D	S	P, R	DAL,MSI,OHM,SOA
M55342^04@590#&	590	100 (char. E, H) or 150 (char. K, M)	E, H, K, M	B, C, W	D	S	P, R	DAL,MSI,OHM,SOA
M55342^04@604#&	604	100 (char. E, H) or 150 (char. K, M)	E, H, K, M	B, C, W	D	S	P, R	DAL,MSI,OHM,SOA
M55342^04@619#&	619	100 (char. E, H) or 150 (char. K, M)	E, H, K, M	B, C, W	D	S	P, R	DAL,MSI,OHM,SOA
M55342^04@620#&	620	100 (char. E, H) or 150 (char. K, M)	E, H, K, M	B, C, W	G, J	S	P, R	DAL,MSI,OHM,SOA
M55342^04@634#&	634	100 (char. E, H) or 150 (char. K, M)	E, H, K, M	B, C, W	D	S	P, R	DAL,MSI,OHM,SOA
M55342^04@649#&	649	100 (char. E, H) or 150 (char. K, M)	E, H, K, M	B, C, W	D	S	P, R	DAL,MSI,OHM,SOA
M55342^04@665#&	665	100 (char. E, H) or 150 (char. K, M)	E, H, K, M	B, C, W	D	S	P, R	DAL,MSI,OHM,SOA
M55342^04@680#&	680	100 (char. E, H) or 150 (char. K, M)	E, H, K, M	B, C, W	G, J, M	S	P, R	DAL,MSI,OHM,SOA
M55342^04@681#&	681	100 (char. E, H) or 150 (char. K, M)	E, H, K, M	B, C, W	D	S	P, R	DAL,MSI,OHM,SOA
M55342^04@698#&	698	100 (char. E, H) or 150 (char. K, M)	E, H, K, M	B, C, W	D	S	P, R	DAL,MSI,OHM,SOA
M55342^04@715#&	715	100 (char. E, H) or 150 (char. K, M)	E, H, K, M	B, C, W	D	S	P, R	DAL,MSI,OHM,SOA
M55342^04@732#&	732	100 (char. E, H) or 150 (char. K, M)	E, H, K, M	B, C, W	D	S	P, R	DAL,MSI,OHM,SOA
M55342^04@750#&	750	100 (char. E, H) or 150 (char. K, M)	E, H, K, M	B, C, W	D, G, J	S	P, R	DAL,MSI,OHM,SOA
M55342^04@768#&	768	100 (char. E, H) or 150 (char. K, M)	E, H, K, M	B, C, W	D	S	P, R	DAL,MSI,OHM,SOA
M55342^04@787#&	787	100 (char. E, H) or 150 (char. K, M)	E, H, K, M	B, C, W	D	S	P, R	DAL,MSI,OHM,SOA
M55342^04@806#&	806	100 (char. E, H) or 150 (char. K, M)	E, H, K, M	B, C, W	D	S	P, R	DAL,MSI,OHM,SOA

M55342^04@820#&	820	100 (char. E, H) or 150 (char. K, M)	E, H, K, M	B, C, W	G, J, M	S	P, R	DAL,MSI,OHM,SOA
M55342^04@825#&	825	100 (char. E, H) or 150 (char. K, M)	E, H, K, M	B, C, W	D	S	P, R	DAL,MSI,OHM,SOA
M55342^04@845#&	845	100 (char. E, H) or 150 (char. K, M)	E, H, K, M	B, C, W	D	S	P, R	DAL,MSI,OHM,SOA
M55342^04@866#&	866	100 (char. E, H) or 150 (char. K, M)	E, H, K, M	B, C, W	D	S	P, R	DAL,MSI,OHM,SOA
M55342^04@887#&	887	100 (char. E, H) or 150 (char. K, M)	E, H, K, M	B, C, W	D	S	P, R	DAL,MSI,OHM,SOA
M55342^04@909#&	909	100 (char. E, H) or 150 (char. K, M)	E, H, K, M	B, C, W	D	S	P, R	DAL,MSI,OHM,SOA
M55342^04@910#&	910	100 (char. E, H) or 150 (char. K, M)	E, H, K, M	B, C, W	G, J	S	P, R	DAL,MSI,OHM,SOA
M55342^04@931#&	931	100 (char. E, H) or 150 (char. K, M)	E, H, K, M	B, C, W	D	S	P, R	DAL,MSI,OHM,SOA
M55342^04@953#&	953	100 (char. E, H) or 150 (char. K, M)	E, H, K, M	B, C, W	D	S	P, R	DAL,MSI,OHM,SOA
M55342^04@976#&	976	100 (char. E, H) or 150 (char. K, M)	E, H, K, M	B, C, W	D	S	P, R	DAL,MSI,OHM,SOA
M55342^04@1#00&	1,000	100 (char. E, H) or 150 (char. K, M)	E, H, K, M	B, C, W	E, H, K, N	S	P, R	DAL,MSI,OHM,SOA
M55342^04@1#02&	1,020	100 (char. E, H) or 150 (char. K, M)	E, H, K, M	B, C, W	E	S	P, R	DAL,MSI,OHM,SOA
M55342^04@1#05&	1,050	100 (char. E, H) or 150 (char. K, M)	E, H, K, M	B, C, W	E	S	P, R	DAL,MSI,OHM,SOA
M55342^04@1#07&	1,070	100 (char. E, H) or 150 (char. K, M)	E, H, K, M	B, C, W	E	S	P, R	DAL,MSI,OHM,SOA
M55342^04@1#10&	1,100	100 (char. E, H) or 150 (char. K, M)	E, H, K, M	B, C, W	E, H, K	S	P, R	DAL,MSI,OHM,SOA
M55342^04@1#13&	1,130	100 (char. E, H) or 150 (char. K, M)	E, H, K, M	B, C, W	E	S	P, R	DAL,MSI,OHM,SOA
M55342^04@1#15&	1,150	100 (char. E, H) or 150 (char. K, M)	E, H, K, M	B, C, W	E	S	P, R	DAL,MSI,OHM,SOA
M55342^04@1#18&	1,180	100 (char. E, H) or 150 (char. K, M)	E, H, K, M	B, C, W	E	S	P, R	DAL,MSI,OHM,SOA
M55342^04@1#20&	1,200	100 (char. E, H) or 150 (char. K, M)	E, H, K, M	B, C, W	H, K, N	S	P, R	DAL,MSI,OHM,SOA
M55342^04@1#21&	1,210	100 (char. E, H) or 150 (char. K, M)	E, H, K, M	B, C, W	E	S	P, R	DAL,MSI,OHM,SOA
M55342^04@1#24&	1,240	100 (char. E, H) or 150 (char. K, M)	E, H, K, M	B, C, W	E	S	P, R	DAL,MSI,OHM,SOA
M55342^04@1#27&	1,270	100 (char. E, H) or 150 (char. K, M)	E, H, K, M	B, C, W	E	S	P, R	DAL,MSI,OHM,SOA
M55342^04@1#30&	1,300	100 (char. E, H) or 150 (char. K, M)	E, H, K, M	B, C, W	E, H, K	S	P, R	DAL,MSI,OHM,SOA
M55342^04@1#33&	1,330	100 (char. E, H) or 150 (char. K, M)	E, H, K, M	B, C, W	E	S	P, R	DAL,MSI,OHM,SOA
M55342^04@1#37&	1,370	100 (char. E, H) or 150 (char. K, M)	E, H, K, M	B, C, W	E	S	P, R	DAL,MSI,OHM,SOA
M55342^04@1#40&	1,400	100 (char. E, H) or 150 (char. K, M)	E, H, K, M	B, C, W	E	S	P, R	DAL,MSI,OHM,SOA
M55342^04@1#43&	1,430	100 (char. E, H) or 150 (char. K, M)	E, H, K, M	B, C, W	E	S	P, R	DAL,MSI,OHM,SOA
M55342^04@1#47&	1,470	100 (char. E, H) or 150 (char. K, M)	E, H, K, M	B, C, W	E	S	P, R	DAL,MSI,OHM,SOA
M55342^04@1#50&	1,500	100 (char. E, H) or 150 (char. K, M)	E, H, K, M	B, C, W	E, H, K, N	S	P, R	DAL,MSI,OHM,SOA
M55342^04@1#54&	1,540	100 (char. E, H) or 150 (char. K, M)	E, H, K, M	B, C, W	E	S	P, R	DAL,MSI,OHM,SOA
M55342^04@1#58&	1,580	100 (char. E, H) or 150 (char. K, M)	E, H, K, M	B, C, W	E	S	P, R	DAL,MSI,OHM,SOA
M55342^04@1#60&	1,600	100 (char. E, H) or 150 (char. K, M)	E, H, K, M	B, C, W	H, K	S	P, R	DAL,MSI,OHM,SOA
M55342^04@1#62&	1,620	100 (char. E, H) or 150 (char. K, M)	E, H, K, M	B, C, W	E	S	P, R	DAL,MSI,OHM,SOA
M55342^04@1#65&	1,650	100 (char. E, H) or 150 (char. K, M)	E, H, K, M	B, C, W	E	S	P, R	DAL,MSI,OHM,SOA
M55342^04@1#69&	1,690	100 (char. E, H) or 150 (char. K, M)	E, H, K, M	B, C, W	E	S	P, R	DAL,MSI,OHM,SOA
M55342^04@1#74&	1,740	100 (char. E, H) or 150 (char. K, M)	E, H, K, M	B, C, W	E	S	P, R	DAL,MSI,OHM,SOA
M55342^04@1#78&	1,780	100 (char. E, H) or 150 (char. K, M)	E, H, K, M	B, C, W	E	S	P, R	DAL,MSI,OHM,SOA
M55342^04@1#80&	1,800	100 (char. E, H) or 150 (char. K, M)	E, H, K, M	B, C, W	H, K, N	S	P, R	DAL,MSI,OHM,SOA
M55342^04@1#82&	1,820	100 (char. E, H) or 150 (char. K, M)	E, H, K, M	B, C, W	E	S	P, R	DAL,MSI,OHM,SOA
M55342^04@1#87&	1,870	100 (char. E, H) or 150 (char. K, M)	E, H, K, M	B, C, W	E	S	P, R	DAL,MSI,OHM,SOA
M55342^04@1#91&	1,910	100 (char. E, H) or 150 (char. K, M)	E, H, K, M	B, C, W	E	S	P, R	DAL,MSI,OHM,SOA
M55342^04@1#96&	1,960	100 (char. E, H) or 150 (char. K, M)	E, H, K, M	B, C, W	E	S	P, R	DAL,MSI,OHM,SOA
M55342^04@2#00&	2,000	100 (char. E, H) or 150 (char. K, M)	E, H, K, M	B, C, W	E, H, K, N	S	P, R	DAL,MSI,OHM,SOA
M55342^04@2#05&	2,050	100 (char. E, H) or 150 (char. K, M)	E, H, K, M	B, C, W	E	S	P, R	DAL,MSI,OHM,SOA
M55342^04@2#10&	2,100	100 (char. E, H) or 150 (char. K, M)	E, H, K, M	B, C, W	E	S	P, R	DAL,MSI,OHM,SOA
M55342^04@2#15&	2,150	100 (char. E, H) or 150 (char. K, M)	E, H, K, M	B, C, W	E	S	P, R	DAL,MSI,OHM,SOA
M55342^04@2#20&	2,200	100 (char. E, H) or 150 (char. K, M)	E, H, K, M	B, C, W	H, K, N	S	P, R	DAL,MSI,OHM,SOA

M55342^04@2#21&	2,210	100 (char. E, H) or 150 (char. K, M)	E, H, K, M	B, C, W	E	S	P, R	DAL,MSI,OHM,SOA
M55342^04@2#26&	2,260	100 (char. E, H) or 150 (char. K, M)	E, H, K, M	B, C, W	E	S	P, R	DAL,MSI,OHM,SOA
M55342^04@2#32&	2,320	100 (char. E, H) or 150 (char. K, M)	E, H, K, M	B, C, W	E	S	P, R	DAL,MSI,OHM,SOA
M55342^04@2#37&	2,370	100 (char. E, H) or 150 (char. K, M)	E, H, K, M	B, C, W	E	S	P, R	DAL,MSI,OHM,SOA
M55342^04@2#40&	2,400	100 (char. E, H) or 150 (char. K, M)	E, H, K, M	B, C, W	H, K	S	P, R	DAL,MSI,OHM,SOA
M55342^04@2#43&	2,430	100 (char. E, H) or 150 (char. K, M)	E, H, K, M	B, C, W	E	S	P, R	DAL,MSI,OHM,SOA
M55342^04@2#49&	2,490	100 (char. E, H) or 150 (char. K, M)	E, H, K, M	B, C, W	E	S	P, R	DAL,MSI,OHM,SOA
M55342^04@2#55&	2,550	100 (char. E, H) or 150 (char. K, M)	E, H, K, M	B, C, W	E	S	P, R	DAL,MSI,OHM,SOA
M55342^04@2#61&	2,610	100 (char. E, H) or 150 (char. K, M)	E, H, K, M	B, C, W	E	S	P, R	DAL,MSI,OHM,SOA
M55342^04@2#67&	2,670	100 (char. E, H) or 150 (char. K, M)	E, H, K, M	B, C, W	E	S	P, R	DAL,MSI,OHM,SOA
M55342^04@2#70&	2,700	100 (char. E, H) or 150 (char. K, M)	E, H, K, M	B, C, W	H, K, N	S	P, R	DAL,MSI,OHM,SOA
M55342^04@2#74&	2,740	100 (char. E, H) or 150 (char. K, M)	E, H, K, M	B, C, W	E	S	P, R	DAL,MSI,OHM,SOA
M55342^04@2#80&	2,800	100 (char. E, H) or 150 (char. K, M)	E, H, K, M	B, C, W	E	S	P, R	DAL,MSI,OHM,SOA
M55342^04@2#87&	2,870	100 (char. E, H) or 150 (char. K, M)	E, H, K, M	B, C, W	E	S	P, R	DAL,MSI,OHM,SOA
M55342^04@2#94&	2,940	100 (char. E, H) or 150 (char. K, M)	E, H, K, M	B, C, W	E	S	P, R	DAL,MSI,OHM,SOA
M55342^04@3#00&	3,000	100 (char. E, H) or 150 (char. K, M)	E, H, K, M	B, C, W	H, K	S	P, R	DAL,MSI,OHM,SOA
M55342^04@3#01&	3,010	100 (char. E, H) or 150 (char. K, M)	E, H, K, M	B, C, W	E	S	P, R	DAL,MSI,OHM,SOA
M55342^04@3#09&	3,090	100 (char. E, H) or 150 (char. K, M)	E, H, K, M	B, C, W	E	S	P, R	DAL,MSI,OHM,SOA
M55342^04@3#16&	3,160	100 (char. E, H) or 150 (char. K, M)	E, H, K, M	B, C, W	E	S	P, R	DAL,MSI,OHM,SOA
M55342^04@3#24&	3,240	100 (char. E, H) or 150 (char. K, M)	E, H, K, M	B, C, W	E	S	P, R	DAL,MSI,OHM,SOA
M55342^04@3#30&	3,300	100 (char. E, H) or 150 (char. K, M)	E, H, K, M	B, C, W	H, K, N	S	P, R	DAL,MSI,OHM,SOA
M55342^04@3#32&	3,320	100 (char. E, H) or 150 (char. K, M)	E, H, K, M	B, C, W	E	S	P, R	DAL,MSI,OHM,SOA
M55342^04@3#40&	3,400	100 (char. E, H) or 150 (char. K, M)	E, H, K, M	B, C, W	E	S	P, R	DAL,MSI,OHM,SOA
M55342^04@3#48&	3,480	100 (char. E, H) or 150 (char. K, M)	E, H, K, M	B, C, W	E	S	P, R	DAL,MSI,OHM,SOA
M55342^04@3#57&	3,570	100 (char. E, H) or 150 (char. K, M)	E, H, K, M	B, C, W	E	S	P, R	DAL,MSI,OHM,SOA
M55342^04@3#60&	3,600	100 (char. E, H) or 150 (char. K, M)	E, H, K, M	B, C, W	H, K	S	P, R	DAL,MSI,OHM,SOA
M55342^04@3#65&	3,650	100 (char. E, H) or 150 (char. K, M)	E, H, K, M	B, C, W	E	S	P, R	DAL,MSI,OHM,SOA
M55342^04@3#74&	3,740	100 (char. E, H) or 150 (char. K, M)	E, H, K, M	B, C, W	E	S	P, R	DAL,MSI,OHM,SOA
M55342^04@3#83&	3,830	100 (char. E, H) or 150 (char. K, M)	E, H, K, M	B, C, W	E	S	P, R	DAL,MSI,OHM,SOA
M55342^04@3#90&	3,900	100 (char. E, H) or 150 (char. K, M)	E, H, K, M	B, C, W	H, K, N	S	P, R	DAL,MSI,OHM,SOA
M55342^04@3#92&	3,920	100 (char. E, H) or 150 (char. K, M)	E, H, K, M	B, C, W	E	S	P, R	DAL,MSI,OHM,SOA
M55342^04@4#02&	4,020	100 (char. E, H) or 150 (char. K, M)	E, H, K, M	B, C, W	E	S	P, R	DAL,MSI,OHM,SOA
M55342^04@4#12&	4,120	100 (char. E, H) or 150 (char. K, M)	E, H, K, M	B, C, W	E	S	P, R	DAL,MSI,OHM,SOA
M55342^04@4#22&	4,220	100 (char. E, H) or 150 (char. K, M)	E, H, K, M	B, C, W	E	S	P, R	DAL,MSI,OHM,SOA
M55342^04@4#30&	4,300	100 (char. E, H) or 150 (char. K, M)	E, H, K, M	B, C, W	H, K	S	P, R	DAL,MSI,OHM,SOA
M55342^04@4#32&	4,320	100 (char. E, H) or 150 (char. K, M)	E, H, K, M	B, C, W	E	S	P, R	DAL,MSI,OHM,SOA
M55342^04@4#42&	4,420	100 (char. E, H) or 150 (char. K, M)	E, H, K, M	B, C, W	E	S	P, R	DAL,MSI,OHM,SOA
M55342^04@4#53&	4,530	100 (char. E, H) or 150 (char. K, M)	E, H, K, M	B, C, W	E	S	P, R	DAL,MSI,OHM,SOA
M55342^04@4#64&	4,640	100 (char. E, H) or 150 (char. K, M)	E, H, K, M	B, C, W	E	S	P, R	DAL,MSI,OHM,SOA
M55342^04@4#70&	4,700	100 (char. E, H) or 150 (char. K, M)	E, H, K, M	B, C, W	H, K, N	S	P, R	DAL,MSI,OHM,SOA
M55342^04@4#75&	4,750	100 (char. E, H) or 150 (char. K, M)	E, H, K, M	B, C, W	E	S	P, R	DAL,MSI,OHM,SOA
M55342^04@4#87&	4,870	100 (char. E, H) or 150 (char. K, M)	E, H, K, M	B, C, W	E	S	P, R	DAL,MSI,OHM,SOA
M55342^04@4#99&	4,990	100 (char. E, H) or 150 (char. K, M)	E, H, K, M	B, C, W	E	S	P, R	DAL,MSI,OHM,SOA
M55342^04@5#10&	5,100	100 (char. E, H) or 150 (char. K, M)	E, H, K, M	B, C, W	H, K	S	P, R	DAL,MSI,OHM,SOA
M55342^04@5#11&	5,110	100 (char. E, H) or 150 (char. K, M)	E, H, K, M	B, C, W	E	S	P, R	DAL,MSI,OHM,SOA
M55342^04@5#23&	5,230	100 (char. E, H) or 150 (char. K, M)	E, H, K, M	B, C, W	E	S	P, R	DAL,MSI,OHM,SOA
M55342^04@5#36&	5,360	100 (char. E, H) or 150 (char. K, M)	E, H, K, M	B, C, W	E	S	P, R	DAL,MSI,OHM,SOA

M55342^04@5#49&	5,490	100 (char. E, H) or 150 (char. K, M)	E, H, K, M	B, C, W	E	S	P, R	DAL,MSI,OHM,SOA
M55342^04@5#60&	5,600	100 (char. E, H) or 150 (char. K, M)	E, H, K, M	B, C, W	H, K, N	S	P, R	DAL,MSI,OHM,SOA
M55342^04@5#62&	5,620	100 (char. E, H) or 150 (char. K, M)	E, H, K, M	B, C, W	E	S	P, R	DAL,MSI,OHM,SOA
M55342^04@5#76&	5,760	100 (char. E, H) or 150 (char. K, M)	E, H, K, M	B, C, W	E	S	P, R	DAL,MSI,OHM,SOA
M55342^04@5#90&	5,900	100 (char. E, H) or 150 (char. K, M)	E, H, K, M	B, C, W	E	S	P, R	DAL,MSI,OHM,SOA
M55342^04@6#04&	6,040	100 (char. E, H) or 150 (char. K, M)	E, H, K, M	B, C, W	E	S	P, R	DAL,MSI,OHM,SOA
M55342^04@6#19&	6,190	100 (char. E, H) or 150 (char. K, M)	E, H, K, M	B, C, W	E	S	P, R	DAL,MSI,OHM,SOA
M55342^04@6#20&	6,200	100 (char. E, H) or 150 (char. K, M)	E, H, K, M	B, C, W	H, K	S	P, R	DAL,MSI,OHM,SOA
M55342^04@6#34&	6,340	100 (char. E, H) or 150 (char. K, M)	E, H, K, M	B, C, W	E	S	P, R	DAL,MSI,OHM,SOA
M55342^04@6#49&	6,490	100 (char. E, H) or 150 (char. K, M)	E, H, K, M	B, C, W	E	S	P, R	DAL,MSI,OHM,SOA
M55342^04@6#65&	6,650	100 (char. E, H) or 150 (char. K, M)	E, H, K, M	B, C, W	E	S	P, R	DAL,MSI,OHM,SOA
M55342^04@6#80&	6,800	100 (char. E, H) or 150 (char. K, M)	E, H, K, M	B, C, W	H, K, N	S	P, R	DAL,MSI,OHM,SOA
M55342^04@6#81&	6,810	100 (char. E, H) or 150 (char. K, M)	E, H, K, M	B, C, W	E	S	P, R	DAL,MSI,OHM,SOA
M55342^04@6#98&	6,980	100 (char. E, H) or 150 (char. K, M)	E, H, K, M	B, C, W	E	S	P, R	DAL,MSI,OHM,SOA
M55342^04@7#15&	7,150	100 (char. E, H) or 150 (char. K, M)	E, H, K, M	B, C, W	E	S	P, R	DAL,MSI,OHM,SOA
M55342^04@7#32&	7,320	100 (char. E, H) or 150 (char. K, M)	E, H, K, M	B, C, W	E	S	P, R	DAL,MSI,OHM,SOA
M55342^04@7#50&	7,500	100 (char. E, H) or 150 (char. K, M)	E, H, K, M	B, C, W	E, H, K	S	P, R	DAL,MSI,OHM,SOA
M55342^04@7#68&	7,680	100 (char. E, H) or 150 (char. K, M)	E, H, K, M	B, C, W	E	S	P, R	DAL,MSI,OHM,SOA
M55342^04@7#87&	7,870	100 (char. E, H) or 150 (char. K, M)	E, H, K, M	B, C, W	E	S	P, R	DAL,MSI,OHM,SOA
M55342^04@8#06&	8,060	100 (char. E, H) or 150 (char. K, M)	E, H, K, M	B, C, W	E	S	P, R	DAL,MSI,OHM,SOA
M55342^04@8#20&	8,200	100 (char. E, H) or 150 (char. K, M)	E, H, K, M	B, C, W	H, K, N	S	P, R	DAL,MSI,OHM,SOA
M55342^04@8#25&	8,250	100 (char. E, H) or 150 (char. K, M)	E, H, K, M	B, C, W	E	S	P, R	DAL,MSI,OHM,SOA
M55342^04@8#45&	8,450	100 (char. E, H) or 150 (char. K, M)	E, H, K, M	B, C, W	E	S	P, R	DAL,MSI,OHM,SOA
M55342^04@8#66&	8,660	100 (char. E, H) or 150 (char. K, M)	E, H, K, M	B, C, W	E	S	P, R	DAL,MSI,OHM,SOA
M55342^04@8#87&	8,870	100 (char. E, H) or 150 (char. K, M)	E, H, K, M	B, C, W	E	S	P, R	DAL,MSI,OHM,SOA
M55342^04@9#09&	9,090	100 (char. E, H) or 150 (char. K, M)	E, H, K, M	B, C, W	E	S	P, R	DAL,MSI,OHM,SOA
M55342^04@9#10&	9,100	100 (char. E, H) or 150 (char. K, M)	E, H, K, M	B, C, W	H, K	S	P, R	DAL,MSI,OHM,SOA
M55342^04@9#31&	9,310	100 (char. E, H) or 150 (char. K, M)	E, H, K, M	B, C, W	E	S	P, R	DAL,MSI,OHM,SOA
M55342^04@9#53&	9,530	100 (char. E, H) or 150 (char. K, M)	E, H, K, M	B, C, W	E	S	P, R	DAL,MSI,OHM,SOA
M55342^04@9#76&	9,760	100 (char. E, H) or 150 (char. K, M)	E, H, K, M	B, C, W	E	S	P, R	DAL,MSI,OHM,SOA
M55342^04@10#0&	10,000	100 (char. E, H) or 150 (char. K, M)	E, H, K, M	B, C, W	E, H, K, N	S	P, R	DAL,MSI,OHM,SOA
M55342^04@10#2&	10,200	100 (char. E, H) or 150 (char. K, M)	E, H, K, M	B, C, W	E	S	P, R	DAL,MSI,OHM,SOA
M55342^04@10#5&	10,500	100 (char. E, H) or 150 (char. K, M)	E, H, K, M	B, C, W	E	S	P, R	DAL,MSI,OHM,SOA
M55342^04@10#7&	10,700	100 (char. E, H) or 150 (char. K, M)	E, H, K, M	B, C, W	E	S	P, R	DAL,MSI,OHM,SOA
M55342^04@11#0&	11,000	100 (char. E, H) or 150 (char. K, M)	E, H, K, M	B, C, W	E, H, K	S	P, R	DAL,MSI,OHM,SOA
M55342^04@11#3&	11,300	100 (char. E, H) or 150 (char. K, M)	E, H, K, M	B, C, W	E	S	P, R	DAL,MSI,OHM,SOA
M55342^04@11#5&	11,500	100 (char. E, H) or 150 (char. K, M)	E, H, K, M	B, C, W	E	S	P, R	DAL,MSI,OHM,SOA
M55342^04@11#8&	11,800	100 (char. E, H) or 150 (char. K, M)	E, H, K, M	B, C, W	E	S	P, R	DAL,MSI,OHM,SOA
M55342^04@12#0&	12,000	100 (char. E, H) or 150 (char. K, M)	E, H, K, M	B, C, W	H, K, N	S	P, R	DAL,MSI,OHM,SOA
M55342^04@12#1&	12,100	100 (char. E, H) or 150 (char. K, M)	E, H, K, M	B, C, W	E	S	P, R	DAL,MSI,OHM,SOA
M55342^04@12#4&	12,400	100 (char. E, H) or 150 (char. K, M)	E, H, K, M	B, C, W	E	S	P, R	DAL,MSI,OHM,SOA
M55342^04@12#7&	12,700	100 (char. E, H) or 150 (char. K, M)	E, H, K, M	B, C, W	E	S	P, R	DAL,MSI,OHM,SOA
M55342^04@13#0&	13,000	100 (char. E, H) or 150 (char. K, M)	E, H, K, M	B, C, W	E, H, K	S	P, R	DAL,MSI,OHM,SOA
M55342^04@13#3&	13,300	100 (char. E, H) or 150 (char. K, M)	E, H, K, M	B, C, W	E	S	P, R	DAL,MSI,OHM,SOA
M55342^04@13#7&	13,700	100 (char. E, H) or 150 (char. K, M)	E, H, K, M	B, C, W	E	S	P, R	DAL,MSI,OHM,SOA
M55342^04@14#0&	14,000	100 (char. E, H) or 150 (char. K, M)	E, H, K, M	B, C, W	E	S	P, R	DAL,MSI,OHM,SOA
M55342^04@14#3&	14,300	100 (char. E, H) or 150 (char. K, M)	E, H, K, M	B, C, W	E	S	P, R	DAL,MSI,OHM,SOA

M55342^04@14#7&	14,700	100 (char. E, H) or 150 (char. K, M)	E, H, K, M	B, C, W	E	S	P, R	DAL,MSI,OHM,SOA
M55342^04@15#0&	15,000	100 (char. E, H) or 150 (char. K, M)	E, H, K, M	B, C, W	E, H, K, N	S	P, R	DAL,MSI,OHM,SOA
M55342^04@15#4&	15,400	100 (char. E, H) or 150 (char. K, M)	E, H, K, M	B, C, W	E	S	P, R	DAL,MSI,OHM,SOA
M55342^04@15#8&	15,800	100 (char. E, H) or 150 (char. K, M)	E, H, K, M	B, C, W	E	S	P, R	DAL,MSI,OHM,SOA
M55342^04@16#0&	16,000	100 (char. E, H) or 150 (char. K, M)	E, H, K, M	B, C, W	H, K	S	P, R	DAL,MSI,OHM,SOA
M55342^04@16#2&	16,200	100 (char. E, H) or 150 (char. K, M)	E, H, K, M	B, C, W	E	S	P, R	DAL,MSI,OHM,SOA
M55342^04@16#5&	16,500	100 (char. E, H) or 150 (char. K, M)	E, H, K, M	B, C, W	E	S	P, R	DAL,MSI,OHM,SOA
M55342^04@16#9&	16,900	100 (char. E, H) or 150 (char. K, M)	E, H, K, M	B, C, W	E	S	P, R	DAL,MSI,OHM,SOA
M55342^04@17#4&	17,400	100 (char. E, H) or 150 (char. K, M)	E, H, K, M	B, C, W	E	S	P, R	DAL,MSI,OHM,SOA
M55342^04@17#8&	17,800	100 (char. E, H) or 150 (char. K, M)	E, H, K, M	B, C, W	E	S	P, R	DAL,MSI,OHM,SOA
M55342^04@18#0&	18,000	100 (char. E, H) or 150 (char. K, M)	E, H, K, M	B, C, W	H, K, N	S	P, R	DAL,MSI,OHM,SOA
M55342^04@18#2&	18,200	100 (char. E, H) or 150 (char. K, M)	E, H, K, M	B, C, W	E	S	P, R	DAL,MSI,OHM,SOA
M55342^04@18#7&	18,700	100 (char. E, H) or 150 (char. K, M)	E, H, K, M	B, C, W	E	S	P, R	DAL,MSI,OHM,SOA
M55342^04@19#1&	19,100	100 (char. E, H) or 150 (char. K, M)	E, H, K, M	B, C, W	E	S	P, R	DAL,MSI,OHM,SOA
M55342^04@19#6&	19,600	100 (char. E, H) or 150 (char. K, M)	E, H, K, M	B, C, W	E	S	P, R	DAL,MSI,OHM,SOA
M55342^04@20#0&	20,000	100 (char. E, H) or 150 (char. K, M)	E, H, K, M	B, C, W	E, H, K, N	S	P, R	DAL,MSI,OHM,SOA
M55342^04@20#5&	20,500	100 (char. E, H) or 150 (char. K, M)	E, H, K, M	B, C, W	E	S	P, R	DAL,MSI,OHM,SOA
M55342^04@21#0&	21,000	100 (char. E, H) or 150 (char. K, M)	E, H, K, M	B, C, W	E	S	P, R	DAL,MSI,OHM,SOA
M55342^04@21#5&	21,500	100 (char. E, H) or 150 (char. K, M)	E, H, K, M	B, C, W	E	S	P, R	DAL,MSI,OHM,SOA
M55342^04@22#0&	22,000	100 (char. E, H) or 150 (char. K, M)	E, H, K, M	B, C, W	H, K, N	S	P, R	DAL,MSI,OHM,SOA
M55342^04@22#1&	22,100	100 (char. E, H) or 150 (char. K, M)	E, H, K, M	B, C, W	E	S	P, R	DAL,MSI,OHM,SOA
M55342^04@22#6&	22,600	100 (char. E, H) or 150 (char. K, M)	E, H, K, M	B, C, W	E	S	P, R	DAL,MSI,OHM,SOA
M55342^04@23#2&	23,200	100 (char. E, H) or 150 (char. K, M)	E, H, K, M	B, C, W	E	S	P, R	DAL,MSI,OHM,SOA
M55342^04@23#7&	23,700	100 (char. E, H) or 150 (char. K, M)	E, H, K, M	B, C, W	E	S	P, R	DAL,MSI,OHM,SOA
M55342^04@24#0&	24,000	100 (char. E, H) or 150 (char. K, M)	E, H, K, M	B, C, W	H, K	S	P, R	DAL,MSI,OHM,SOA
M55342^04@24#3&	24,300	100 (char. E, H) or 150 (char. K, M)	E, H, K, M	B, C, W	E	S	P, R	DAL,MSI,OHM,SOA
M55342^04@24#9&	24,900	100 (char. E, H) or 150 (char. K, M)	E, H, K, M	B, C, W	E	S	P, R	DAL,MSI,OHM,SOA
M55342^04@25#5&	25,500	100 (char. E, H) or 150 (char. K, M)	E, H, K, M	B, C, W	E	S	P, R	DAL,MSI,OHM,SOA
M55342^04@26#1&	26,100	100 (char. E, H) or 150 (char. K, M)	E, H, K, M	B, C, W	E	S	P, R	DAL,MSI,OHM,SOA
M55342^04@26#7&	26,700	100 (char. E, H) or 150 (char. K, M)	E, H, K, M	B, C, W	E	S	P, R	DAL,MSI,OHM,SOA
M55342^04@27#0&	27,000	100 (char. E, H) or 150 (char. K, M)	E, H, K, M	B, C, W	H, K, N	S	P, R	DAL,MSI,OHM,SOA
M55342^04@27#4&	27,400	100 (char. E, H) or 150 (char. K, M)	E, H, K, M	B, C, W	E	S	P, R	DAL,MSI,OHM,SOA
M55342^04@28#0&	28,000	100 (char. E, H) or 150 (char. K, M)	E, H, K, M	B, C, W	E	S	P, R	DAL,MSI,OHM,SOA
M55342^04@28#7&	28,700	100 (char. E, H) or 150 (char. K, M)	E, H, K, M	B, C, W	E	S	P, R	DAL,MSI,OHM,SOA
M55342^04@29#4&	29,400	100 (char. E, H) or 150 (char. K, M)	E, H, K, M	B, C, W	E	S	P, R	DAL,MSI,OHM,SOA
M55342^04@30#0&	30,000	100 (char. E, H) or 150 (char. K, M)	E, H, K, M	B, C, W	H, K	S	P, R	DAL,MSI,OHM,SOA
M55342^04@30#1&	30,100	100 (char. E, H) or 150 (char. K, M)	E, H, K, M	B, C, W	E	S	P, R	DAL,MSI,OHM,SOA
M55342^04@30#9&	30,900	100 (char. E, H) or 150 (char. K, M)	E, H, K, M	B, C, W	E	S	P, R	DAL,MSI,OHM,SOA
M55342^04@31#6&	31,600	100 (char. E, H) or 150 (char. K, M)	E, H, K, M	B, C, W	E	S	P, R	DAL,MSI,OHM,SOA
M55342^04@32#4&	32,400	100 (char. E, H) or 150 (char. K, M)	E, H, K, M	B, C, W	E	S	P, R	DAL,MSI,OHM,SOA
M55342^04@33#0&	33,000	100 (char. E, H) or 150 (char. K, M)	E, H, K, M	B, C, W	H, K, N	S	P, R	DAL,MSI,OHM,SOA
M55342^04@33#2&	33,200	100 (char. E, H) or 150 (char. K, M)	E, H, K, M	B, C, W	E	S	P, R	DAL,MSI,OHM,SOA
M55342^04@34#0&	34,000	100 (char. E, H) or 150 (char. K, M)	E, H, K, M	B, C, W	E	S	P, R	DAL,MSI,OHM,SOA
M55342^04@34#8&	34,800	100 (char. E, H) or 150 (char. K, M)	E, H, K, M	B, C, W	E	S	P, R	DAL,MSI,OHM,SOA
M55342^04@35#7&	35,700	100 (char. E, H) or 150 (char. K, M)	E, H, K, M	B, C, W	E	S	P, R	DAL,MSI,OHM,SOA
M55342^04@36#0&	36,000	100 (char. E, H) or 150 (char. K, M)	E, H, K, M	B, C, W	H, K	S	P, R	DAL,MSI,OHM,SOA
M55342^04@36#5&	36,500	100 (char. E, H) or 150 (char. K, M)	E, H, K, M	B, C, W	E	S	P, R	DAL,MSI,OHM,SOA

M55342^04@37#4&	37,400	100 (char. E, H) or 150 (char. K, M)	E, H, K, M	B, C, W	E	S	P, R	DAL,MSI,OHM,SOA
M55342^04@38#3&	38,300	100 (char. E, H) or 150 (char. K, M)	E, H, K, M	B, C, W	E	S	P, R	DAL,MSI,OHM,SOA
M55342^04@39#0&	39,000	100 (char. E, H) or 150 (char. K, M)	E, H, K, M	B, C, W	H, K, N	S	P, R	DAL,MSI,OHM,SOA
M55342^04@39#2&	39,200	100 (char. E, H) or 150 (char. K, M)	E, H, K, M	B, C, W	E	S	P, R	DAL,MSI,OHM,SOA
M55342^04@40#2&	40,200	100 (char. E, H) or 150 (char. K, M)	E, H, K, M	B, C, W	E	S	P, R	DAL,MSI,OHM,SOA
M55342^04@41#2&	41,200	100 (char. E, H) or 150 (char. K, M)	E, H, K, M	B, C, W	E	S	P, R	DAL,MSI,OHM,SOA
M55342^04@42#2&	42,200	100 (char. E, H) or 150 (char. K, M)	E, H, K, M	B, C, W	E	S	P, R	DAL,MSI,OHM,SOA
M55342^04@43#0&	43,000	100 (char. E, H) or 150 (char. K, M)	E, H, K, M	B, C, W	H, K	S	P, R	DAL,MSI,OHM,SOA
M55342^04@43#2&	43,200	100 (char. E, H) or 150 (char. K, M)	E, H, K, M	B, C, W	E	S	P, R	DAL,MSI,OHM,SOA
M55342^04@44#2&	44,200	100 (char. E, H) or 150 (char. K, M)	E, H, K, M	B, C, W	E	S	P, R	DAL,MSI,OHM,SOA
M55342^04@45#3&	45,300	100 (char. E, H) or 150 (char. K, M)	E, H, K, M	B, C, W	E	S	P, R	DAL,MSI,OHM,SOA
M55342^04@46#4&	46,400	100 (char. E, H) or 150 (char. K, M)	E, H, K, M	B, C, W	E	S	P, R	DAL,MSI,OHM,SOA
M55342^04@47#0&	47,000	100 (char. E, H) or 150 (char. K, M)	E, H, K, M	B, C, W	H, K, N	S	P, R	DAL,MSI,OHM,SOA
M55342^04@47#5&	47,500	100 (char. E, H) or 150 (char. K, M)	E, H, K, M	B, C, W	E	S	P, R	DAL,MSI,OHM,SOA
M55342^04@48#7&	48,700	100 (char. E, H) or 150 (char. K, M)	E, H, K, M	B, C, W	E	S	P, R	DAL,MSI,OHM,SOA
M55342^04@49#9&	49,900	100 (char. E, H) or 150 (char. K, M)	E, H, K, M	B, C, W	E	S	P, R	DAL,MSI,OHM,SOA
M55342^04@51#0&	51,000	100 (char. E, H) or 150 (char. K, M)	E, H, K, M	B, C, W	H, K	S	P, R	DAL,MSI,OHM,SOA
M55342^04@51#1&	51,100	100 (char. E, H) or 150 (char. K, M)	E, H, K, M	B, C, W	E	S	P, R	DAL,MSI,OHM,SOA
M55342^04@52#3&	52,300	100 (char. E, H) or 150 (char. K, M)	E, H, K, M	B, C, W	E	S	P, R	DAL,MSI,OHM,SOA
M55342^04@53#6&	53,600	100 (char. E, H) or 150 (char. K, M)	E, H, K, M	B, C, W	E	S	P, R	DAL,MSI,OHM,SOA
M55342^04@54#9&	54,900	100 (char. E, H) or 150 (char. K, M)	E, H, K, M	B, C, W	E	S	P, R	DAL,MSI,OHM,SOA
M55342^04@56#0&	56,000	100 (char. E, H) or 150 (char. K, M)	E, H, K, M	B, C, W	H, K, N	S	P, R	DAL,MSI,OHM,SOA
M55342^04@56#2&	56,200	100 (char. E, H) or 150 (char. K, M)	E, H, K, M	B, C, W	E	S	P, R	DAL,MSI,OHM,SOA
M55342^04@57#6&	57,600	100 (char. E, H) or 150 (char. K, M)	E, H, K, M	B, C, W	E	S	P, R	DAL,MSI,OHM,SOA
M55342^04@59#0&	59,000	100 (char. E, H) or 150 (char. K, M)	E, H, K, M	B, C, W	E	S	P, R	DAL,MSI,OHM,SOA
M55342^04@60#4&	60,400	100 (char. E, H) or 150 (char. K, M)	E, H, K, M	B, C, W	E	S	P, R	DAL,MSI,OHM,SOA
M55342^04@61#9&	61,900	100 (char. E, H) or 150 (char. K, M)	E, H, K, M	B, C, W	E	S	P, R	DAL,MSI,OHM,SOA
M55342^04@62#0&	62,000	100 (char. E, H) or 150 (char. K, M)	E, H, K, M	B, C, W	H, K	S	P, R	DAL,MSI,OHM,SOA
M55342^04@63#4&	63,400	100 (char. E, H) or 150 (char. K, M)	E, H, K, M	B, C, W	E	S	P, R	DAL,MSI,OHM,SOA
M55342^04@64#9&	64,900	100 (char. E, H) or 150 (char. K, M)	E, H, K, M	B, C, W	E	S	P, R	DAL,MSI,OHM,SOA
M55342^04@66#5&	66,500	100 (char. E, H) or 150 (char. K, M)	E, H, K, M	B, C, W	E	S	P, R	DAL,MSI,OHM,SOA
M55342^04@68#0&	68,000	100 (char. E, H) or 150 (char. K, M)	E, H, K, M	B, C, W	H, K, N	S	P, R	DAL,MSI,OHM,SOA
M55342^04@68#1&	68,100	100 (char. E, H) or 150 (char. K, M)	E, H, K, M	B, C, W	E	S	P, R	DAL,MSI,OHM,SOA
M55342^04@69#8&	69,800	100 (char. E, H) or 150 (char. K, M)	E, H, K, M	B, C, W	E	S	P, R	DAL,MSI,OHM,SOA
M55342^04@71#5&	71,500	100 (char. E, H) or 150 (char. K, M)	E, H, K, M	B, C, W	E	S	P, R	DAL,MSI,OHM,SOA
M55342^04@73#2&	73,200	100 (char. E, H) or 150 (char. K, M)	E, H, K, M	B, C, W	E	S	P, R	DAL,MSI,OHM,SOA
M55342^04@75#0&	75,000	100 (char. E, H) or 150 (char. K, M)	E, H, K, M	B, C, W	E, H, K	S	P, R	DAL,MSI,OHM,SOA
M55342^04@76#8&	76,800	100 (char. E, H) or 150 (char. K, M)	E, H, K, M	B, C, W	E	S	P, R	DAL,MSI,OHM,SOA
M55342^04@78#7&	78,700	100 (char. E, H) or 150 (char. K, M)	E, H, K, M	B, C, W	E	S	P, R	DAL,MSI,OHM,SOA
M55342^04@80#6&	80,600	100 (char. E, H) or 150 (char. K, M)	E, H, K, M	B, C, W	E	S	P, R	DAL,MSI,OHM,SOA
M55342^04@82#0&	82,000	100 (char. E, H) or 150 (char. K, M)	E, H, K, M	B, C, W	H, K, N	S	P, R	DAL,MSI,OHM,SOA
M55342^04@82#5&	82,500	100 (char. E, H) or 150 (char. K, M)	E, H, K, M	B, C, W	E	S	P, R	DAL,MSI,OHM,SOA
M55342^04@84#5&	84,500	100 (char. E, H) or 150 (char. K, M)	E, H, K, M	B, C, W	E	S	P, R	DAL,MSI,OHM,SOA
M55342^04@86#6&	86,600	100 (char. E, H) or 150 (char. K, M)	E, H, K, M	B, C, W	E	S	P, R	DAL,MSI,OHM,SOA
M55342^04@88#7&	88,700	100 (char. E, H) or 150 (char. K, M)	E, H, K, M	B, C, W	E	S	P, R	DAL,MSI,OHM,SOA
M55342^04@90#9&	90,900	100 (char. E, H) or 150 (char. K, M)	E, H, K, M	B, C, W	E	S	P, R	DAL,MSI,OHM,SOA
M55342^04@91#0&	91,000	100 (char. E, H) or 150 (char. K, M)	E, H, K, M	B, C, W	H, K	S	P, R	DAL,MSI,OHM,SOA

M55342^04@93#1&	93,100	100 (char. E, H) or 150 (char. K, M)	E, H, K, M	B, C, W	E	S	P, R	DAL,MSI,OHM,SOA
M55342^04@95#3&	95,300	100 (char. E, H) or 150 (char. K, M)	E, H, K, M	B, C, W	E	S	P, R	DAL,MSI,OHM,SOA
M55342^04@97#6&	97,600	100 (char. E, H) or 150 (char. K, M)	E, H, K, M	B, C, W	E	S	P, R	DAL,MSI,OHM,SOA
M55342^04@10#0&	100,000	100 (char. E, H) or 150 (char. K, M)	E, H, K, M	B, C, W	E, H, K, N	S	P, R	DAL,MSI,OHM,SOA
M55342^04@10#2&	102,000	100 (char. E, H) or 150 (char. K, M)	E, H, K, M	B, C, W	E	S	P, R	DAL,MSI,OHM,SOA
M55342^04@10#5&	105,000	100 (char. E, H) or 150 (char. K, M)	E, H, K, M	B, C, W	E	S	P, R	DAL,MSI,OHM,SOA
M55342^04@10#7&	107,000	100 (char. E, H) or 150 (char. K, M)	E, H, K, M	B, C, W	E	S	P, R	DAL,MSI,OHM,SOA
M55342^04@11#0&	110,000	100 (char. E, H) or 150 (char. K, M)	E, H, K, M	B, C, W	E, H, K	S	P, R	DAL,MSI,OHM,SOA
M55342^04@11#3&	113,000	100 (char. E, H) or 150 (char. K, M)	E, H, K, M	B, C, W	E	S	P, R	DAL,MSI,OHM,SOA
M55342^04@11#5&	115,000	100 (char. E, H) or 150 (char. K, M)	E, H, K, M	B, C, W	E	S	P, R	DAL,MSI,OHM,SOA
M55342^04@11#8&	118,000	100 (char. E, H) or 150 (char. K, M)	E, H, K, M	B, C, W	E	S	P, R	DAL,MSI,OHM,SOA
M55342^04@12#0&	120,000	100 (char. E, H) or 150 (char. K, M)	E, H, K, M	B, C, W	H, K, N	S	P, R	DAL,MSI,OHM,SOA
M55342^04@12#1&	121,000	100 (char. E, H) or 150 (char. K, M)	E, H, K, M	B, C, W	E	S	P, R	DAL,MSI,OHM,SOA
M55342^04@12#4&	124,000	100 (char. E, H) or 150 (char. K, M)	E, H, K, M	B, C, W	E	S	P, R	DAL,MSI,OHM,SOA
M55342^04@12#7&	127,000	100 (char. E, H) or 150 (char. K, M)	E, H, K, M	B, C, W	E	S	P, R	DAL,MSI,OHM,SOA
M55342^04@13#0&	130,000	100 (char. E, H) or 150 (char. K, M)	E, H, K, M	B, C, W	E, H, K	S	P, R	DAL,MSI,OHM,SOA
M55342^04@13#3&	133,000	100 (char. E, H) or 150 (char. K, M)	E, H, K, M	B, C, W	E	S	P, R	DAL,MSI,OHM,SOA
M55342^04@13#7&	137,000	100 (char. E, H) or 150 (char. K, M)	E, H, K, M	B, C, W	E	S	P, R	DAL,MSI,OHM,SOA
M55342^04@14#0&	140,000	100 (char. E, H) or 150 (char. K, M)	E, H, K, M	B, C, W	E	S	P, R	DAL,MSI,OHM,SOA
M55342^04@14#3&	143,000	100 (char. E, H) or 150 (char. K, M)	E, H, K, M	B, C, W	E	S	P, R	DAL,MSI,OHM,SOA
M55342^04@14#7&	147,000	100 (char. E, H) or 150 (char. K, M)	E, H, K, M	B, C, W	E	S	P, R	DAL,MSI,OHM,SOA
M55342^04@15#0&	150,000	100 (char. E, H) or 150 (char. K, M)	E, H, K, M	B, C, W	E, H, K, N	S	P, R	DAL,MSI,OHM,SOA
M55342^04@15#4&	154,000	100 (char. E, H) or 150 (char. K, M)	E, H, K, M	B, C, W	E	S	P, R	DAL,MSI,OHM,SOA
M55342^04@15#8&	158,000	100 (char. E, H) or 150 (char. K, M)	E, H, K, M	B, C, W	E	S	P, R	DAL,MSI,OHM,SOA
M55342^04@16#0&	160,000	100 (char. E, H) or 150 (char. K, M)	E, H, K, M	B, C, W	H, K	S	P, R	DAL,MSI,OHM,SOA
M55342^04@16#2&	162,000	100 (char. E, H) or 150 (char. K, M)	E, H, K, M	B, C, W	E	S	P, R	DAL,MSI,OHM,SOA
M55342^04@16#5&	165,000	100 (char. E, H) or 150 (char. K, M)	E, H, K, M	B, C, W	E	S	P, R	DAL,MSI,OHM,SOA
M55342^04@16#9&	169,000	100 (char. E, H) or 150 (char. K, M)	E, H, K, M	B, C, W	E	S	P, R	DAL,MSI,OHM,SOA
M55342^04@17#4&	174,000	100 (char. E, H) or 150 (char. K, M)	E, H, K, M	B, C, W	E	S	P, R	DAL,MSI,OHM,SOA
M55342^04@17#8&	178,000	100 (char. E, H) or 150 (char. K, M)	E, H, K, M	B, C, W	E	S	P, R	DAL,MSI,OHM,SOA
M55342^04@18#0&	180,000	100 (char. E, H) or 150 (char. K, M)	E, H, K, M	B, C, W	H, K, N	S	P, R	DAL,MSI,OHM,SOA
M55342^04@18#2&	182,000	100 (char. E, H) or 150 (char. K, M)	E, H, K, M	B, C, W	E	S	P, R	DAL,MSI,OHM,SOA
M55342^04@18#7&	187,000	100 (char. E, H) or 150 (char. K, M)	E, H, K, M	B, C, W	E	S	P, R	DAL,MSI,OHM,SOA
M55342^04@19#1&	191,000	100 (char. E, H) or 150 (char. K, M)	E, H, K, M	B, C, W	E	S	P, R	DAL,MSI,OHM,SOA
M55342^04@19#6&	196,000	100 (char. E, H) or 150 (char. K, M)	E, H, K, M	B, C, W	E	S	P, R	DAL,MSI,OHM,SOA
M55342^04@20#0&	200,000	100 (char. E, H) or 150 (char. K, M)	E, H, K, M	B, C, W	E, H, K, N	S	P, R	DAL,MSI,OHM,SOA
M55342^04@20#5&	205,000	100 (char. E, H) or 150 (char. K, M)	E, H, K, M	B, C, W	E	S	P, R	DAL,MSI,OHM,SOA
M55342^04@21#0&	210,000	100 (char. E, H) or 150 (char. K, M)	E, H, K, M	B, C, W	E	S	P, R	DAL,MSI,OHM,SOA
M55342^04@21#5&	215,000	100 (char. E, H) or 150 (char. K, M)	E, H, K, M	B, C, W	E	S	P, R	DAL,MSI,OHM,SOA
M55342^04@22#0&	220,000	100 (char. E, H) or 150 (char. K, M)	E, H, K, M	B, C, W	H, K, N	S	P, R	DAL,MSI,OHM,SOA
M55342^04@22#1&	221,000	100 (char. E, H) or 150 (char. K, M)	E, H, K, M	B, C, W	E	S	P, R	DAL,MSI,OHM,SOA
M55342^04@22#6&	226,000	100 (char. E, H) or 150 (char. K, M)	E, H, K, M	B, C, W	E	S	P, R	DAL,MSI,OHM,SOA
M55342^04@23#2&	232,000	100 (char. E, H) or 150 (char. K, M)	E, H, K, M	B, C, W	E	S	P, R	DAL,MSI,OHM,SOA
M55342^04@23#7&	237,000	100 (char. E, H) or 150 (char. K, M)	E, H, K, M	B, C, W	E	S	P, R	DAL,MSI,OHM,SOA
M55342^04@24#0&	240,000	100 (char. E, H) or 150 (char. K, M)	E, H, K, M	B, C, W	H, K	S	P, R	DAL,MSI,OHM,SOA
M55342^04@24#3&	243,000	100 (char. E, H) or 150 (char. K, M)	E, H, K, M	B, C, W	E	S	P, R	DAL,MSI,OHM,SOA
M55342^04@24#9&	249,000	100 (char. E, H) or 150 (char. K, M)	E, H, K, M	B, C, W	E	S	P, R	DAL,MSI,OHM,SOA

M55342^04@25#5&	255,000	100 (char. E, H) or 150 (char. K, M)	E, H, K, M	B, C, W	E	S	P, R	DAL,MSI,OHM,SOA
M55342^04@26#1&	261,000	100 (char. E, H) or 150 (char. K, M)	E, H, K, M	B, C, W	E	S	P, R	DAL,MSI,OHM,SOA
M55342^04@26#7&	267,000	100 (char. E, H) or 150 (char. K, M)	E, H, K, M	B, C, W	E	S	P, R	DAL,MSI,OHM,SOA
M55342^04@27#0&	270,000	100 (char. E, H) or 150 (char. K, M)	E, H, K, M	B, C, W	H, K, N	S	P, R	DAL,MSI,OHM,SOA
M55342^04@27#4&	274,000	100 (char. E, H) or 150 (char. K, M)	E, H, K, M	B, C, W	E	S	P, R	DAL,MSI,OHM,SOA
M55342^04@28#0&	280,000	100 (char. E, H) or 150 (char. K, M)	E, H, K, M	B, C, W	E	S	P, R	DAL,MSI,OHM,SOA
M55342^04@28#7&	287,000	100 (char. E, H) or 150 (char. K, M)	E, H, K, M	B, C, W	E	S	P, R	DAL,MSI,OHM,SOA
M55342^04@29#4&	294,000	100 (char. E, H) or 150 (char. K, M)	E, H, K, M	B, C, W	E	S	P, R	DAL,MSI,OHM,SOA
M55342^04@30#0&	300,000	100 (char. E, H) or 150 (char. K, M)	E, H, K, M	B, C, W	H, K	S	P, R	DAL,MSI,OHM,SOA
M55342^04@30#1&	301,000	100 (char. E, H) or 150 (char. K, M)	E, H, K, M	B, C, W	E	S	P, R	DAL,MSI,OHM,SOA
M55342^04@30#9&	309,000	100 (char. E, H) or 150 (char. K, M)	E, H, K, M	B, C, W	E	S	P, R	DAL,MSI,OHM,SOA
M55342^04@31#6&	316,000	100 (char. E, H) or 150 (char. K, M)	E, H, K, M	B, C, W	E	S	P, R	DAL,MSI,OHM,SOA
M55342^04@32#4&	324,000	100 (char. E, H) or 150 (char. K, M)	E, H, K, M	B, C, W	E	S	P, R	DAL,MSI,OHM,SOA
M55342^04@33#0&	330,000	100 (char. E, H) or 150 (char. K, M)	E, H, K, M	B, C, W	H, K, N	S	P, R	DAL,MSI,OHM,SOA
M55342^04@33#2&	332,000	100 (char. E, H) or 150 (char. K, M)	E, H, K, M	B, C, W	E	S	P, R	DAL,MSI,OHM,SOA
M55342^04@34#0&	340,000	100 (char. E, H) or 150 (char. K, M)	E, H, K, M	B, C, W	E	S	P, R	DAL,MSI,OHM,SOA
M55342^04@34#8&	348,000	100 (char. E, H) or 150 (char. K, M)	E, H, K, M	B, C, W	E	S	P, R	DAL,MSI,OHM,SOA
M55342^04@35#7&	357,000	100 (char. E, H) or 150 (char. K, M)	E, H, K, M	B, C, W	E	S	P, R	DAL,MSI,OHM,SOA
M55342^04@36#0&	360,000	100 (char. E, H) or 150 (char. K, M)	E, H, K, M	B, C, W	H, K	S	P, R	DAL,MSI,OHM,SOA
M55342^04@36#5&	365,000	100 (char. E, H) or 150 (char. K, M)	E, H, K, M	B, C, W	E	S	P, R	DAL,MSI,OHM,SOA
M55342^04@37#4&	374,000	100 (char. E, H) or 150 (char. K, M)	E, H, K, M	B, C, W	E	S	P, R	DAL,MSI,OHM,SOA
M55342^04@38#3&	383,000	100 (char. E, H) or 150 (char. K, M)	E, H, K, M	B, C, W	E	S	P, R	DAL,MSI,OHM,SOA
M55342^04@39#0&	390,000	100 (char. E, H) or 150 (char. K, M)	E, H, K, M	B, C, W	H, K, N	S	P, R	DAL,MSI,OHM,SOA
M55342^04@39#2&	392,000	100 (char. E, H) or 150 (char. K, M)	E, H, K, M	B, C, W	E	S	P, R	DAL,MSI,OHM,SOA
M55342^04@40#2&	402,000	100 (char. E, H) or 150 (char. K, M)	E, H, K, M	B, C, W	E	S	P, R	DAL,MSI,OHM,SOA
M55342^04@41#2&	412,000	100 (char. E, H) or 150 (char. K, M)	E, H, K, M	B, C, W	E	S	P, R	DAL,MSI,OHM,SOA
M55342^04@42#2&	422,000	100 (char. E, H) or 150 (char. K, M)	E, H, K, M	B, C, W	E	S	P, R	DAL,MSI,OHM,SOA
M55342^04@43#0&	430,000	100 (char. E, H) or 150 (char. K, M)	E, H, K, M	B, C, W	H, K	S	P, R	DAL,MSI,OHM,SOA
M55342^04@43#2&	432,000	100 (char. E, H) or 150 (char. K, M)	E, H, K, M	B, C, W	E	S	P, R	DAL,MSI,OHM,SOA
M55342^04@44#2&	442,000	100 (char. E, H) or 150 (char. K, M)	E, H, K, M	B, C, W	E	S	P, R	DAL,MSI,OHM,SOA
M55342^04@45#3&	453,000	100 (char. E, H) or 150 (char. K, M)	E, H, K, M	B, C, W	E	S	P, R	DAL,MSI,OHM,SOA
M55342^04@46#4&	464,000	100 (char. E, H) or 150 (char. K, M)	E, H, K, M	B, C, W	E	S	P, R	DAL,MSI,OHM,SOA
M55342^04@47#0&	470,000	100 (char. E, H) or 150 (char. K, M)	E, H, K, M	B, C, W	H, K, N	S	P, R	DAL,MSI,OHM,SOA
M55342^04@47#5&	475,000	100 (char. E, H) or 150 (char. K, M)	E, H, K, M	B, C, W	E	S	P, R	DAL,MSI,OHM,SOA
M55342^04@48#7&	487,000	100 (char. E, H) or 150 (char. K, M)	E, H, K, M	B, C, W	E	S	P, R	DAL,MSI,OHM,SOA
M55342^04@49#9&	499,000	100 (char. E, H) or 150 (char. K, M)	E, H, K, M	B, C, W	E	S	P, R	DAL,MSI,OHM,SOA
M55342^04@51#0&	510,000	100 (char. E, H) or 150 (char. K, M)	E, H, K, M	B, C, W	H, K	S	P, R	DAL,MSI,OHM,SOA
M55342^04@51#1&	511,000	100 (char. E, H) or 150 (char. K, M)	E, H, K, M	B, C, W	E	S	P, R	DAL,MSI,OHM,SOA
M55342^04@52#3&	523,000	100 (char. E, H) or 150 (char. K, M)	E, H, K, M	B, C, W	E	S	P, R	DAL,MSI,OHM,SOA
M55342^04@53#6&	536,000	100 (char. E, H) or 150 (char. K, M)	E, H, K, M	B, C, W	E	S	P, R	DAL,MSI,OHM,SOA
M55342^04@54#9&	549,000	100 (char. E, H) or 150 (char. K, M)	E, H, K, M	B, C, W	E	S	P, R	DAL,MSI,OHM,SOA
M55342^04@56#0&	560,000	100 (char. E, H) or 150 (char. K, M)	E, H, K, M	B, C, W	H, K, N	S	P, R	DAL,MSI,OHM,SOA
M55342^04@56#2&	562,000	100 (char. E, H) or 150 (char. K, M)	E, H, K, M	B, C, W	E	S	P, R	DAL,MSI,OHM,SOA
M55342^04@57#6&	576,000	100 (char. E, H) or 150 (char. K, M)	E, H, K, M	B, C, W	E	S	P, R	DAL,MSI,OHM,SOA
M55342^04@59#0&	590,000	100 (char. E, H) or 150 (char. K, M)	E, H, K, M	B, C, W	E	S	P, R	DAL,MSI,OHM,SOA
M55342^04@60#4&	604,000	100 (char. E, H) or 150 (char. K, M)	E, H, K, M	B, C, W	E	S	P, R	DAL,MSI,OHM,SOA
M55342^04@61#9&	619,000	100 (char. E, H) or 150 (char. K, M)	E, H, K, M	B, C, W	E	S	P, R	DAL,MSI,OHM,SOA

M55342^04@62#0&	620,000	100 (char. E, H) or 150 (char. K, M)	E, H, K, M	B, C, W	H, K	S	P, R	DAL,MSI,OHM,SOA
M55342^04@63#4&	634,000	100 (char. E, H) or 150 (char. K, M)	E, H, K, M	B, C, W	E	S	P, R	DAL,MSI,OHM,SOA
M55342^04@64#9&	649,000	100 (char. E, H) or 150 (char. K, M)	E, H, K, M	B, C, W	E	S	P, R	DAL,MSI,OHM,SOA
M55342^04@66#5&	665,000	100 (char. E, H) or 150 (char. K, M)	E, H, K, M	B, C, W	E	S	P, R	DAL,MSI,OHM,SOA
M55342^04@68#0&	680,000	100 (char. E, H) or 150 (char. K, M)	E, H, K, M	B, C, W	H, K, N	S	P, R	DAL,MSI,OHM,SOA
M55342^04@68#1&	681,000	100 (char. E, H) or 150 (char. K, M)	E, H, K, M	B, C, W	E	S	P, R	DAL,MSI,OHM,SOA
M55342^04@69#8&	698,000	100 (char. E, H) or 150 (char. K, M)	E, H, K, M	B, C, W	E	S	P, R	DAL,MSI,OHM,SOA
M55342^04@71#5&	715,000	100 (char. E, H) or 150 (char. K, M)	E, H, K, M	B, C, W	E	S	P, R	DAL,MSI,OHM,SOA
M55342^04@73#2&	732,000	100 (char. E, H) or 150 (char. K, M)	E, H, K, M	B, C, W	E	S	P, R	DAL,MSI,OHM,SOA
M55342^04@75#0&	750,000	100 (char. E, H) or 150 (char. K, M)	E, H, K, M	B, C, W	E, H, K	S	P, R	DAL,MSI,OHM,SOA
M55342^04@76#8&	768,000	100 (char. E, H) or 150 (char. K, M)	E, H, K, M	B, C, W	E	S	P, R	DAL,MSI,OHM,SOA
M55342^04@78#7&	787,000	100 (char. E, H) or 150 (char. K, M)	E, H, K, M	B, C, W	E	S	P, R	DAL,MSI,OHM,SOA
M55342^04@80#6&	806,000	100 (char. E, H) or 150 (char. K, M)	E, H, K, M	B, C, W	E	S	P, R	DAL,MSI,OHM,SOA
M55342^04@82#0&	820,000	100 (char. E, H) or 150 (char. K, M)	E, H, K, M	B, C, W	H, K, N	S	P, R	DAL,MSI,OHM,SOA
M55342^04@82#5&	825,000	100 (char. E, H) or 150 (char. K, M)	E, H, K, M	B, C, W	E	S	P, R	DAL,MSI,OHM,SOA
M55342^04@84#5&	845,000	100 (char. E, H) or 150 (char. K, M)	E, H, K, M	B, C, W	E	S	P, R	DAL,MSI,OHM,SOA
M55342^04@86#6&	866,000	100 (char. E, H) or 150 (char. K, M)	E, H, K, M	B, C, W	E	S	P, R	DAL,MSI,OHM,SOA
M55342^04@88#7&	887,000	100 (char. E, H) or 150 (char. K, M)	E, H, K, M	B, C, W	E	S	P, R	DAL,MSI,OHM,SOA
M55342^04@90#9&	909,000	100 (char. E, H) or 150 (char. K, M)	E, H, K, M	B, C, W	E	S	P, R	DAL,MSI,OHM,SOA
M55342^04@91#0&	910,000	100 (char. E, H) or 150 (char. K, M)	E, H, K, M	B, C, W	H, K	S	P, R	DAL,MSI,OHM,SOA
M55342^04@93#1&	931,000	100 (char. E, H) or 150 (char. K, M)	E, H, K, M	B, C, W	E	S	P, R	DAL,MSI,OHM,SOA
M55342^04@95#3&	953,000	100 (char. E, H) or 150 (char. K, M)	E, H, K, M	B, C, W	E	S	P, R	DAL,MSI,OHM,SOA
M55342^04@97#6&	976,000	100 (char. E, H) or 150 (char. K, M)	E, H, K, M	B, C, W	E	S	P, R	DAL,MSI,OHM,SOA
M55342^04@1#00&	1,000,000	100 (char. E, H) or 150 (char. K, M)	E, H, K, M	B, C, W	E, T, L, P	S	P, R	DAL,MSI,OHM,SOA
M55342^04@1#02&	1,020,000	100 (char. E, H) or 150 (char. K, M)	E, H, K, M	B, C, W	F	S	P, R	DAL,SOA
M55342^04@1#05&	1,050,000	100 (char. E, H) or 150 (char. K, M)	E, H, K, M	B, C, W	F	S	P, R	DAL,SOA
M55342^04@1#07&	1,070,000	100 (char. E, H) or 150 (char. K, M)	E, H, K, M	B, C, W	F	S	P, R	DAL,SOA
M55342^04@1#10&	1,100,000	100 (char. E, H) or 150 (char. K, M)	E, H, K, M	B, C, W	F, T, L	S	P, R	DAL,SOA
M55342^04@1#13&	1,130,000	100 (char. E, H) or 150 (char. K, M)	E, H, K, M	B, C, W	F	S	P, R	DAL,SOA
M55342^04@1#15&	1,150,000	100 (char. E, H) or 150 (char. K, M)	E, H, K, M	B, C, W	F	S	P, R	DAL,SOA
M55342^04@1#18&	1,180,000	100 (char. E, H) or 150 (char. K, M)	E, H, K, M	B, C, W	F	S	P, R	DAL,SOA
M55342^04@1#20&	1,200,000	100 (char. E, H) or 150 (char. K, M)	E, H, K, M	B, C, W	T, L, P	S	P, R	DAL,SOA
M55342^04@1#21&	1,210,000	100 (char. E, H) or 150 (char. K, M)	E, H, K, M	B, C, W	F	S	P, R	DAL,SOA
M55342^04@1#24&	1,240,000	100 (char. E, H) or 150 (char. K, M)	E, H, K, M	B, C, W	F	S	P, R	DAL,SOA
M55342^04@1#27&	1,270,000	100 (char. E, H) or 150 (char. K, M)	E, H, K, M	B, C, W	F	S	P, R	DAL,SOA
M55342^04@1#30&	1,300,000	100 (char. E, H) or 150 (char. K, M)	E, H, K, M	B, C, W	F, T, L	S	P, R	DAL,SOA
M55342^04@1#33&	1,330,000	100 (char. E, H) or 150 (char. K, M)	E, H, K, M	B, C, W	F	S	P, R	DAL,SOA
M55342^04@1#37&	1,370,000	100 (char. E, H) or 150 (char. K, M)	E, H, K, M	B, C, W	F	S	P, R	DAL,SOA
M55342^04@1#40&	1,400,000	100 (char. E, H) or 150 (char. K, M)	E, H, K, M	B, C, W	F	S	P, R	DAL,SOA
M55342^04@1#43&	1,430,000	100 (char. E, H) or 150 (char. K, M)	E, H, K, M	B, C, W	F	S	P, R	DAL,SOA
M55342^04@1#47&	1,470,000	100 (char. E, H) or 150 (char. K, M)	E, H, K, M	B, C, W	F	S	P, R	DAL,SOA
M55342^04@1#50&	1,500,000	100 (char. E, H) or 150 (char. K, M)	E, H, K, M	B, C, W	F, T, L, P	S	P, R	DAL,SOA
M55342^04@1#54&	1,540,000	100 (char. E, H) or 150 (char. K, M)	E, H, K, M	B, C, W	F	S	P, R	DAL,SOA
M55342^04@1#58&	1,580,000	100 (char. E, H) or 150 (char. K, M)	E, H, K, M	B, C, W	F	S	P, R	DAL,SOA
M55342^04@1#60&	1,600,000	100 (char. E, H) or 150 (char. K, M)	E, H, K, M	B, C, W	T, L	S	P, R	DAL,SOA
M55342^04@1#62&	1,620,000	100 (char. E, H) or 150 (char. K, M)	E, H, K, M	B, C, W	F	S	P, R	DAL,SOA
M55342^04@1#65&	1,650,000	100 (char. E, H) or 150 (char. K, M)	E, H, K, M	B, C, W	F	S	P, R	DAL,SOA

M55342^04@1#69&	1,690,000	100 (char. E, H) or 150 (char. K, M)	E, H, K, M	B, C, W	F	S	P, R	DAL,SOA
M55342^04@1#74&	1,740,000	100 (char. E, H) or 150 (char. K, M)	E, H, K, M	B, C, W	F	S	P, R	DAL,SOA
M55342^04@1#78&	1,780,000	100 (char. E, H) or 150 (char. K, M)	E, H, K, M	B, C, W	F	S	P, R	DAL,SOA
M55342^04@1#80&	1,800,000	100 (char. E, H) or 150 (char. K, M)	E, H, K, M	B, C, W	T, L, P	S	P, R	DAL,SOA
M55342^04@1#82&	1,820,000	100 (char. E, H) or 150 (char. K, M)	E, H, K, M	B, C, W	F	S	P, R	DAL,SOA
M55342^04@1#87&	1,870,000	100 (char. E, H) or 150 (char. K, M)	E, H, K, M	B, C, W	F	S	P, R	DAL,SOA
M55342^04@1#91&	1,910,000	100 (char. E, H) or 150 (char. K, M)	E, H, K, M	B, C, W	F	S	P, R	DAL,SOA
M55342^04@1#96&	1,960,000	100 (char. E, H) or 150 (char. K, M)	E, H, K, M	B, C, W	F	S	P, R	DAL,SOA
M55342^04@2#00&	2,000,000	100 (char. E, H) or 150 (char. K, M)	E, H, K, M	B, C, W	F, T, L, P	S	P, R	DAL,SOA
M55342^04@2#05&	2,050,000	100 (char. E, H) or 150 (char. K, M)	E, H, K, M	B, C, W	F	S	P, R	DAL,SOA
M55342^04@2#10&	2,100,000	100 (char. E, H) or 150 (char. K, M)	E, H, K, M	B, C, W	F	S	P, R	DAL,SOA
M55342^04@2#15&	2,150,000	100 (char. E, H) or 150 (char. K, M)	E, H, K, M	B, C, W	F	S	P, R	DAL,SOA
M55342^04@2#20&	2,200,000	100 (char. E, H) or 150 (char. K, M)	E, H, K, M	B, C, W	T, L, P	S	P, R	DAL,SOA
M55342^04@2#21&	2,210,000	100 (char. E, H) or 150 (char. K, M)	E, H, K, M	B, C, W	F	S	P, R	DAL,SOA
M55342^04@2#26&	2,260,000	100 (char. E, H) or 150 (char. K, M)	E, H, K, M	B, C, W	F	S	P, R	DAL,SOA
M55342^04@2#32&	2,320,000	100 (char. E, H) or 150 (char. K, M)	E, H, K, M	B, C, W	F	S	P, R	DAL,SOA
M55342^04@2#37&	2,370,000	100 (char. E, H) or 150 (char. K, M)	E, H, K, M	B, C, W	F	S	P, R	DAL,SOA
M55342^04@2#40&	2,400,000	100 (char. E, H) or 150 (char. K, M)	E, H, K, M	B, C, W	T, L	S	P, R	DAL,SOA
M55342^04@2#43&	2,430,000	100 (char. E, H) or 150 (char. K, M)	E, H, K, M	B, C, W	F	S	P, R	DAL,SOA
M55342^04@2#49&	2,490,000	100 (char. E, H) or 150 (char. K, M)	E, H, K, M	B, C, W	F	S	P, R	DAL,SOA
M55342^04@2#55&	2,550,000	100 (char. E, H) or 150 (char. K, M)	E, H, K, M	B, C, W	F	S	P, R	DAL,SOA
M55342^04@2#61&	2,610,000	100 (char. E, H) or 150 (char. K, M)	E, H, K, M	B, C, W	F	S	P, R	DAL,SOA
M55342^04@2#67&	2,670,000	100 (char. E, H) or 150 (char. K, M)	E, H, K, M	B, C, W	F	S	P, R	DAL,SOA
M55342^04@2#70&	2,700,000	100 (char. E, H) or 150 (char. K, M)	E, H, K, M	B, C, W	T, L, P	S	P, R	DAL,SOA
M55342^04@2#74&	2,740,000	100 (char. E, H) or 150 (char. K, M)	E, H, K, M	B, C, W	F	S	P, R	DAL,SOA
M55342^04@2#80&	2,800,000	100 (char. E, H) or 150 (char. K, M)	E, H, K, M	B, C, W	F	S	P, R	DAL,SOA
M55342^04@2#87&	2,870,000	100 (char. E, H) or 150 (char. K, M)	E, H, K, M	B, C, W	F	S	P, R	DAL,SOA
M55342^04@2#94&	2,940,000	100 (char. E, H) or 150 (char. K, M)	E, H, K, M	B, C, W	F	S	P, R	DAL,SOA
M55342^04@3#00&	3,000,000	100 (char. E, H) or 150 (char. K, M)	E, H, K, M	B, C, W	T, L	S	P, R	DAL,SOA
M55342^04@3#01&	3,010,000	100 (char. E, H) or 150 (char. K, M)	E, H, K, M	B, C, W	F	S	P, R	DAL,SOA
M55342^04@3#09&	3,090,000	100 (char. E, H) or 150 (char. K, M)	E, H, K, M	B, C, W	F	S	P, R	DAL,SOA
M55342^04@3#16&	3,160,000	100 (char. E, H) or 150 (char. K, M)	E, H, K, M	B, C, W	F	S	P, R	DAL,SOA
M55342^04@3#24&	3,240,000	100 (char. E, H) or 150 (char. K, M)	E, H, K, M	B, C, W	F	S	P, R	DAL,SOA
M55342^04@3#30&	3,300,000	100 (char. E, H) or 150 (char. K, M)	E, H, K, M	B, C, W	T, L, P	S	P, R	DAL,SOA
M55342^04@3#32&	3,320,000	100 (char. E, H) or 150 (char. K, M)	E, H, K, M	B, C, W	F	S	P, R	DAL,SOA
M55342^04@3#40&	3,400,000	100 (char. E, H) or 150 (char. K, M)	E, H, K, M	B, C, W	F	S	P, R	DAL,SOA
M55342^04@3#48&	3,480,000	100 (char. E, H) or 150 (char. K, M)	E, H, K, M	B, C, W	F	S	P, R	DAL,SOA
M55342^04@3#57&	3,570,000	100 (char. E, H) or 150 (char. K, M)	E, H, K, M	B, C, W	F	S	P, R	DAL,SOA
M55342^04@3#60&	3,600,000	100 (char. E, H) or 150 (char. K, M)	E, H, K, M	B, C, W	T, L	S	P, R	DAL,SOA
M55342^04@3#65&	3,650,000	100 (char. E, H) or 150 (char. K, M)	E, H, K, M	B, C, W	F	S	P, R	DAL,SOA
M55342^04@3#74&	3,740,000	100 (char. E, H) or 150 (char. K, M)	E, H, K, M	B, C, W	F	S	P, R	DAL,SOA
M55342^04@3#83&	3,830,000	100 (char. E, H) or 150 (char. K, M)	E, H, K, M	B, C, W	F	S	P, R	DAL,SOA
M55342^04@3#90&	3,900,000	100 (char. E, H) or 150 (char. K, M)	E, H, K, M	B, C, W	T, L, P	S	P, R	DAL,SOA
M55342^04@3#92&	3,920,000	100 (char. E, H) or 150 (char. K, M)	E, H, K, M	B, C, W	F	S	P, R	DAL,SOA
M55342^04@4#02&	4,020,000	100 (char. E, H) or 150 (char. K, M)	E, H, K, M	B, C, W	F	S	P, R	DAL,SOA
M55342^04@4#12&	4,120,000	100 (char. E, H) or 150 (char. K, M)	E, H, K, M	B, C, W	F	S	P, R	DAL,SOA
M55342^04@4#22&	4,220,000	100 (char. E, H) or 150 (char. K, M)	E, H, K, M	B, C, W	F	S	P, R	DAL,SOA

M55342^04@4#30&	4,300,000	100 (char. E, H) or 150 (char. K, M)	E, H, K, M	B, C, W	T, L	S	P, R	DAL,SOA
M55342^04@4#32&	4,320,000	100 (char. E, H) or 150 (char. K, M)	E, H, K, M	B, C, W	F	S	P, R	DAL,SOA
M55342^04@4#42&	4,420,000	100 (char. E, H) or 150 (char. K, M)	E, H, K, M	B, C, W	F	S	P, R	DAL,SOA
M55342^04@4#53&	4,530,000	100 (char. E, H) or 150 (char. K, M)	E, H, K, M	B, C, W	F	S	P, R	DAL,SOA
M55342^04@4#64&	4,640,000	100 (char. E, H) or 150 (char. K, M)	E, H, K, M	B, C, W	F	S	P, R	DAL,SOA
M55342^04@4#70&	4,700,000	100 (char. E, H) or 150 (char. K, M)	E, H, K, M	B, C, W	T, L, P	S	P, R	DAL,SOA

RM1505 RESISTORS

DECADE BREAKDOWN

Click on the link below to see the associated parts selection listing:

Resistance Range
5.60 Ohms through 9.76 Ohms
10.0 Ohms through 97.6 Ohms
100 Ohms through 976 Ohms
1,000 Ohms through 9,760 Ohms
10,000 Ohms through 97,600 Ohms
100,000 Ohms through 976,000 Ohms
1,000,000 Ohms through 4,700,000 Ohms

MIL-PRF-55342/4 (RM1505) Film Chip Resistors: 5.60 Ohms Through 9.76 Ohms

	Resistance	Power	Char.	Term.	Resistance Tol./	Level 1	Level 2	
Part Number	Value (Ohms)	Rating (mW)	(^)	Type (@)	Multiplier (#)	FRL (&)	FRL (&)	Manufacturer
M55342^04@5#60&	5.60	100 (char. E, H) or 150 (char. K, M)	E, H, K, M	B, C, W	G, J, M	S, T	P, R	DAL,MSI,SOA
M55342^04@5#62&	5.62	100 (char. E, H) or 150 (char. K, M)	E, H, K, M	B, C, W	D	S, T	P, R	DAL,MSI,SOA
M55342^04@5#76&	5.76	100 (char. E, H) or 150 (char. K, M)	E, H, K, M	B, C, W	D	S, T	P, R	DAL,MSI,SOA
M55342^04@5#90&	5.90	100 (char. E, H) or 150 (char. K, M)	E, H, K, M	B, C, W	D	S, T	P, R	DAL,MSI,SOA
M55342^04@6#04&	6.04	100 (char. E, H) or 150 (char. K, M)	E, H, K, M	B, C, W	D	S, T	P, R	DAL,MSI,SOA
M55342^04@6#19&	6.19	100 (char. E, H) or 150 (char. K, M)	E, H, K, M	B, C, W	D	S, T	P, R	DAL,MSI,SOA
M55342^04@6#20&	6.20	100 (char. E, H) or 150 (char. K, M)	E, H, K, M	B, C, W	G, J	S, T	P, R	DAL,MSI,SOA
M55342^04@6#34&	6.34	100 (char. E, H) or 150 (char. K, M)	E, H, K, M	B, C, W	D	S, T	P, R	DAL,MSI,SOA
M55342^04@6#49&	6.49	100 (char. E, H) or 150 (char. K, M)	E, H, K, M	B, C, W	D	S, T	P, R	DAL,MSI,SOA
M55342^04@6#65&	6.65	100 (char. E, H) or 150 (char. K, M)	E, H, K, M	B, C, W	D	S, T	P, R	DAL,MSI,SOA
	Resistance	Power	Char.	Term.	Resistance Tol./	Level 1	Level 2	
Part Number	Value (Ohms)	Rating (mW)	(^)	Type (@)	Multiplier (#)	FRL (&)	FRL (&)	Manufacturer
M55342^04@6#80&	6.80	100 (char. E, H) or 150 (char. K, M)	E, H, K, M	B, C, W	G, J, M	S, T	P, R	DAL,MSI,SOA
M55342^04@6#81&	6.81	100 (char. E, H) or 150 (char. K, M)	E, H, K, M	B, C, W	D	S, T	P, R	DAL,MSI,SOA
M55342^04@6#98&	6.98	100 (char. E, H) or 150 (char. K, M)	E, H, K, M	B, C, W	D	S, T	P, R	DAL,MSI,SOA
M55342^04@7#15&	7.15	100 (char. E, H) or 150 (char. K, M)	E, H, K, M	B, C, W	D	S, T	P, R	DAL,MSI,SOA
M55342^04@7#32&	7.32	100 (char. E, H) or 150 (char. K, M)	E, H, K, M	B, C, W	D	S, T	P, R	DAL,MSI,SOA
M55342^04@7#50&	7.50	100 (char. E, H) or 150 (char. K, M)	E, H, K, M	B, C, W	D, G, J	S, T	P, R	DAL,MSI,SOA
M55342^04@7#68&	7.68	100 (char. E, H) or 150 (char. K, M)	E, H, K, M	B, C, W	D	S, T	P, R	DAL,MSI,SOA

M55342^04@7#87&	7.87	100 (char. E, H) or 150 (char. K, M)	E, H, K, M	B, C, W	D	S, T	P, R	DAL,MSI,SOA
M55342^04@8#06&	8.06	100 (char. E, H) or 150 (char. K, M)	E, H, K, M	B, C, W	D	S, T	P, R	DAL,MSI,SOA
	Resistance	Power	Char.	Term.	Resistance Tol./	Level 1	Level 2	
Part Number	Value (Ohms)	Rating (mW)	(^)	Type (@)	Multiplier (#)	FRL (&)	FRL (&)	Manufacturer
M55342^04@8#20&	8.20	100 (char. E, H) or 150 (char. K, M)	E, H, K, M	B, C, W	G, J, M	S, T	P, R	DAL,MSI,SOA
M55342^04@8#25&	8.25	100 (char. E, H) or 150 (char. K, M)	E, H, K, M	B, C, W	D	S, T	P, R	DAL,MSI,SOA
M55342^04@8#45&	8.45	100 (char. E, H) or 150 (char. K, M)	E, H, K, M	B, C, W	D	S, T	P, R	DAL,MSI,SOA
M55342^04@8#66&	8.66	100 (char. E, H) or 150 (char. K, M)	E, H, K, M	B, C, W	D	S, T	P, R	DAL,MSI,SOA
M55342^04@8#87&	8.87	100 (char. E, H) or 150 (char. K, M)	E, H, K, M	B, C, W	D	S, T	P, R	DAL,MSI,SOA
M55342^04@9#09&	9.09	100 (char. E, H) or 150 (char. K, M)	E, H, K, M	B, C, W	D	S, T	P, R	DAL,MSI,SOA
M55342^04@9#10&	9.10	100 (char. E, H) or 150 (char. K, M)	E, H, K, M	B, C, W	G, J	S, T	P, R	DAL,MSI,SOA
M55342^04@9#31&	9.31	100 (char. E, H) or 150 (char. K, M)	E, H, K, M	B, C, W	D	S, T	P, R	DAL,MSI,SOA
M55342^04@9#53&	9.53	100 (char. E, H) or 150 (char. K, M)	E, H, K, M	B, C, W	D	S, T	P, R	DAL,MSI,SOA
M55342^04@9#76&	9.76	100 (char. E, H) or 150 (char. K, M)	E, H, K, M	B, C, W	D	S, T	P, R	DAL,MSI,SOA
	Resistance	Power	Char.	Term.	Resistance Tol./	Level 1	Level 2	
Part Number	Value (Ohms)	Rating (mW)	(^)	Type (@)	Multiplier (#)	FRL (&)	FRL (&)	Manufacturer

MIL-PRF-55342/4 (RM1505) Film Chip Resistors: 10.0 Ohms Through 97.6 Ohms

	Resistance	Power	Char.	Term.	Resistance Tol./	Level 1	Level 2	
Part Number	Value (Ohms)	Rating (mW)	(^)	Type (@)	Multiplier (#)	FRL (&)	FRL (&)	Manufacturer
M55342^04@10#0&	10.0	100 (char. E, H) or 150 (char. K, M)	E, H, K, M	B, C, W	D, G, J, M	S, T	P, R	DAL,MSI,SOA
M55342^04@10#2&	10.2	100 (char. E, H) or 150 (char. K, M)	E, H, K, M	B, C, W	D	S, T	P, R	DAL,MSI,SOA
M55342^04@10#5&	10.5	100 (char. E, H) or 150 (char. K, M)	E, H, K, M	B, C, W	D	S, T	P, R	DAL,MSI,SOA
M55342^04@10#7&	10.7	100 (char. E, H) or 150 (char. K, M)	E, H, K, M	B, C, W	D	S, T	P, R	DAL,MSI,SOA
M55342^04@11#0&	11.0	100 (char. E, H) or 150 (char. K, M)	E, H, K, M	B, C, W	D, G, J	S, T	P, R	DAL,MSI,SOA
M55342^04@11#3&	11.3	100 (char. E, H) or 150 (char. K, M)	E, H, K, M	B, C, W	D	S, T	P, R	DAL,MSI,SOA
M55342^04@11#5&	11.5	100 (char. E, H) or 150 (char. K, M)	E, H, K, M	B, C, W	D	S, T	P, R	DAL,MSI,SOA
M55342^04@11#8&	11.8	100 (char. E, H) or 150 (char. K, M)	E, H, K, M	B, C, W	D	S, T	P, R	DAL,MSI,SOA
M55342^04@12#0&	12.0	100 (char. E, H) or 150 (char. K, M)	E, H, K, M	B, C, W	G, J, M	S, T	P, R	DAL,MSI,SOA
M55342^04@12#1&	12.1	100 (char. E, H) or 150 (char. K, M)	E, H, K, M	B, C, W	D	S, T	P, R	DAL,MSI,SOA
	Resistance	Power	Char.	Term.	Resistance Tol./	Level 1	Level 2	
Part Number	Value (Ohms)	Rating (mW)	(^)	Type (@)	Multiplier (#)	FRL (&)	FRL (&)	Manufacturer
M55342^04@12#4&	12.4	100 (char. E, H) or 150 (char. K, M)	E, H, K, M	B, C, W	D	S, T	P, R	DAL,MSI,SOA
M55342^04@12#7&	12.7	100 (char. E, H) or 150 (char. K, M)	E, H, K, M	B, C, W	D	S, T	P, R	DAL,MSI,SOA
M55342^04@13#0&	13.0	100 (char. E, H) or 150 (char. K, M)	E, H, K, M	B, C, W	D, G, J	S, T	P, R	DAL,MSI,SOA
M55342^04@13#3&	13.3	100 (char. E, H) or 150 (char. K, M)	E, H, K, M	B, C, W	D	S, T	P, R	DAL,MSI,SOA
M55342^04@13#7&	13.7	100 (char. E, H) or 150 (char. K, M)	E, H, K, M	B, C, W	D	S, T	P, R	DAL,MSI,SOA
M55342^04@14#0&	14.0	100 (char. E, H) or 150 (char. K, M)	E, H, K, M	B, C, W	D	S, T	P, R	DAL,MSI,SOA
M55342^04@14#3&	14.3	100 (char. E, H) or 150 (char. K, M)	E, H, K, M	B, C, W	D	S, T	P, R	DAL,MSI,SOA
M55342^04@14#7&	14.7	100 (char. E, H) or 150 (char. K, M)	E, H, K, M	B, C, W	D	S, T	P, R	DAL,MSI,SOA
M55342^04@15#0&	15.0	100 (char. E, H) or 150 (char. K, M)	E, H, K, M	B, C, W	D, G, J, M	S, T	P, R	DAL,MSI,SOA
	Resistance	Power	Char.	Term.	Resistance Tol./	Level 1	Level 2	
Part Number	Value (Ohms)	Rating (mW)	(^)	Type (@)	Multiplier (#)	FRL (&)	FRL (&)	Manufacturer
M55342^04@15#4&	15.4	100 (char. E, H) or 150 (char. K, M)	E, H, K, M	B, C, W	D	S, T	P, R	DAL,MSI,SOA

M55342^04@15#8&	15.8	100 (char. E, H) or 150 (char. K, M)	E, H, K, M	B, C, W	D	S, T	P, R	DAL,MSI,SOA
M55342^04@16#0&	16.0	100 (char. E, H) or 150 (char. K, M)	E, H, K, M	B, C, W	G, J	S, T	P, R	DAL,MSI,SOA
M55342^04@16#2&	16.2	100 (char. E, H) or 150 (char. K, M)	E, H, K, M	B, C, W	D	S, T	P, R	DAL,MSI,SOA
M55342^04@16#5&	16.5	100 (char. E, H) or 150 (char. K, M)	E, H, K, M	B, C, W	D	S, T	P, R	DAL,MSI,SOA
M55342^04@16#9&	16.9	100 (char. E, H) or 150 (char. K, M)	E, H, K, M	B, C, W	D	S, T	P, R	DAL,MSI,SOA
M55342^04@17#4&	17.4	100 (char. E, H) or 150 (char. K, M)	E, H, K, M	B, C, W	D	S, T	P, R	DAL,MSI,SOA
M55342^04@17#8&	17.8	100 (char. E, H) or 150 (char. K, M)	E, H, K, M	B, C, W	D	S, T	P, R	DAL,MSI,SOA
M55342^04@18#0&	18.0	100 (char. E, H) or 150 (char. K, M)	E, H, K, M	B, C, W	G, J, M	S, T	P, R	DAL,MSI,SOA
	Resistance	Power	Char.	Term.	Resistance Tol./	Level 1	Level 2	
Part Number	Value (Ohms)	Rating (mW)	(^)	Type (@)	Multiplier (#)	FRL (&)	FRL (&)	Manufacturer
M55342^04@18#2&	18.2	100 (char. E, H) or 150 (char. K, M)	E, H, K, M	B, C, W	D	S, T	P, R	DAL,MSI,SOA
M55342^04@18#7&	18.7	100 (char. E, H) or 150 (char. K, M)	E, H, K, M	B, C, W	D	S, T	P, R	DAL,MSI,SOA
M55342^04@19#1&	19.1	100 (char. E, H) or 150 (char. K, M)	E, H, K, M	B, C, W	D	S, T	P, R	DAL,MSI,SOA
M55342^04@19#6&	19.6	100 (char. E, H) or 150 (char. K, M)	E, H, K, M	B, C, W	D	S, T	P, R	DAL,MSI,SOA
M55342^04@20#0&	20.0	100 (char. E, H) or 150 (char. K, M)	E, H, K, M	B, C, W	D, G, J, M	S, T	P, R	DAL,MSI,OHM,SOA
M55342^04@20#5&	20.5	100 (char. E, H) or 150 (char. K, M)	E, H, K, M	B, C, W	D	S, T	P, R	DAL,MSI,OHM,SOA
M55342^04@21#0&	21.0	100 (char. E, H) or 150 (char. K, M)	E, H, K, M	B, C, W	D	S, T	P, R	DAL,MSI,OHM,SOA
M55342^04@21#5&	21.5	100 (char. E, H) or 150 (char. K, M)	E, H, K, M	B, C, W	D	S, T	P, R	DAL,MSI,OHM,SOA
M55342^04@22#0&	22.0	100 (char. E, H) or 150 (char. K, M)	E, H, K, M	B, C, W	G, J, M	S, T	P, R	DAL,MSI,OHM,SOA
	Resistance	Power	Char.	Term.	Resistance Tol./	Level 1	Level 2	
Part Number	Value (Ohms)	Rating (mW)	(^)	Type (@)	Multiplier (#)	FRL (&)	FRL (&)	Manufacturer
M55342^04@22#1&	22.1	100 (char. E, H) or 150 (char. K, M)	E, H, K, M	B, C, W	D	S, T	P, R	DAL,MSI,OHM,SOA
M55342^04@22#6&	22.6	100 (char. E, H) or 150 (char. K, M)	E, H, K, M	B, C, W	D	S, T	P, R	DAL,MSI,OHM,SOA
M55342^04@23#2&	23.2	100 (char. E, H) or 150 (char. K, M)	E, H, K, M	B, C, W	D	S, T	P, R	DAL,MSI,OHM,SOA
M55342^04@23#7&	23.7	100 (char. E, H) or 150 (char. K, M)	E, H, K, M	B, C, W	D	S, T	P, R	DAL,MSI,OHM,SOA
M55342^04@24#0&	24.0	100 (char. E, H) or 150 (char. K, M)	E, H, K, M	B, C, W	G, J	S, T	P, R	DAL,MSI,OHM,SOA
M55342^04@24#3&	24.3	100 (char. E, H) or 150 (char. K, M)	E, H, K, M	B, C, W	D	S, T	P, R	DAL,MSI,OHM,SOA
M55342^04@24#9&	24.9	100 (char. E, H) or 150 (char. K, M)	E, H, K, M	B, C, W	D	S, T	P, R	DAL,MSI,OHM,SOA
M55342^04@25#5&	25.5	100 (char. E, H) or 150 (char. K, M)	E, H, K, M	B, C, W	D	S, T	P, R	DAL,MSI,OHM,SOA
M55342^04@26#1&	26.1	100 (char. E, H) or 150 (char. K, M)	E, H, K, M	B, C, W	D	S, T	P, R	DAL,MSI,OHM,SOA
	Resistance	Power	Char.	Term.	Resistance Tol./	Level 1	Level 2	
Part Number	Value (Ohms)	Rating (mW)	(^)	Type (@)	Multiplier (#)	FRL (&)	FRL (&)	Manufacturer
M55342^04@26#7&	26.7	100 (char. E, H) or 150 (char. K, M)	E, H, K, M	B, C, W	D	S, T	P, R	DAL,MSI,OHM,SOA
M55342^04@27#0&	27.0	100 (char. E, H) or 150 (char. K, M)	E, H, K, M	B, C, W	G, J, M	S, T	P, R	DAL,MSI,OHM,SOA
M55342^04@27#4&	27.4	100 (char. E, H) or 150 (char. K, M)	E, H, K, M	B, C, W	D	S, T	P, R	DAL,MSI,OHM,SOA
M55342^04@28#0&	28.0	100 (char. E, H) or 150 (char. K, M)	E, H, K, M	B, C, W	D	S, T	P, R	DAL,MSI,OHM,SOA
M55342^04@28#7&	28.7	100 (char. E, H) or 150 (char. K, M)	E, H, K, M	B, C, W	D	S, T	P, R	DAL,MSI,OHM,SOA
M55342^04@29#4&	29.4	100 (char. E, H) or 150 (char. K, M)	E, H, K, M	B, C, W	D	S, T	P, R	DAL,MSI,OHM,SOA
M55342^04@30#0&	30.0	100 (char. E, H) or 150 (char. K, M)	E, H, K, M	B, C, W	G, J	S, T	P, R	DAL,MSI,OHM,SOA
M55342^04@30#1&	30.1	100 (char. E, H) or 150 (char. K, M)	E, H, K, M	B, C, W	D	S, T	P, R	DAL,MSI,OHM,SOA
M55342^04@30#9&	30.9	100 (char. E, H) or 150 (char. K, M)	E, H, K, M	B, C, W	D	S, T	P, R	DAL,MSI,OHM,SOA
	Resistance	Power	Char.	Term.	Resistance Tol./	Level 1	Level 2	
Part Number	Value (Ohms)	Rating (mW)	(^)	Type (@)	Multiplier (#)	FRL (&)	FRL (&)	Manufacturer
M55342^04@31#6&	31.6	100 (char. E, H) or 150 (char. K, M)	E, H, K, M	B, C, W	D	S, T	P, R	DAL,MSI,OHM,SOA
M55342^04@32#4&	32.4	100 (char. E, H) or 150 (char. K, M)	E, H, K, M	B, C, W	D	S, T	P, R	DAL,MSI,OHM,SOA
M55342^04@33#0&	33.0	100 (char. E, H) or 150 (char. K, M)	E, H, K, M	B, C, W	G, J, M	S, T	P, R	DAL,MSI,OHM,SOA
M55342^04@33#2&	33.2	100 (char. E, H) or 150 (char. K, M)	E, H, K, M	B, C, W	D	S, T	P, R	DAL,MSI,OHM,SOA

M55342^04@34#0&	34.0	100 (char. E, H) or 150 (char. K, M)	E, H, K, M	B, C, W	D	S, T	P, R	DAL,MSI,OHM,SOA
M55342^04@34#8&	34.8	100 (char. E, H) or 150 (char. K, M)	E, H, K, M	B, C, W	D	S, T	P, R	DAL,MSI,OHM,SOA
M55342^04@35#7&	35.7	100 (char. E, H) or 150 (char. K, M)	E, H, K, M	B, C, W	D	S, T	P, R	DAL,MSI,OHM,SOA
M55342^04@36#0&	36.0	100 (char. E, H) or 150 (char. K, M)	E, H, K, M	B, C, W	G, J	S, T	P, R	DAL,MSI,OHM,SOA
M55342^04@36#5&	36.5	100 (char. E, H) or 150 (char. K, M)	E, H, K, M	B, C, W	D	S, T	P, R	DAL,MSI,OHM,SOA
	Resistance	Power	Char.	Term.	Resistance Tol./	Level 1	Level 2	
Part Number	Value (Ohms)	Rating (mW)	(^)	Type (@)	Multiplier (#)	FRL (&)	FRL (&)	Manufacturer
M55342^04@37#4&	37.4	100 (char. E, H) or 150 (char. K, M)	E, H, K, M	B, C, W	D	S, T	P, R	DAL,MSI,OHM,SOA
M55342^04@38#3&	38.3	100 (char. E, H) or 150 (char. K, M)	E, H, K, M	B, C, W	D	S, T	P, R	DAL,MSI,OHM,SOA
M55342^04@39#0&	39.0	100 (char. E, H) or 150 (char. K, M)	E, H, K, M	B, C, W	G, J, M	S, T	P, R	DAL,MSI,OHM,SOA
M55342^04@39#2&	39.2	100 (char. E, H) or 150 (char. K, M)	E, H, K, M	B, C, W	D	S, T	P, R	DAL,MSI,OHM,SOA
M55342^04@40#2&	40.2	100 (char. E, H) or 150 (char. K, M)	E, H, K, M	B, C, W	D	S, T	P, R	DAL,MSI,OHM,SOA
M55342^04@41#2&	41.2	100 (char. E, H) or 150 (char. K, M)	E, H, K, M	B, C, W	D	S, T	P, R	DAL,MSI,OHM,SOA
M55342^04@42#2&	42.2	100 (char. E, H) or 150 (char. K, M)	E, H, K, M	B, C, W	D	S, T	P, R	DAL,MSI,OHM,SOA
M55342^04@43#0&	43.0	100 (char. E, H) or 150 (char. K, M)	E, H, K, M	B, C, W	G, J	S, T	P, R	DAL,MSI,OHM,SOA
M55342^04@43#2&	43.2	100 (char. E, H) or 150 (char. K, M)	E, H, K, M	B, C, W	D	S, T	P, R	DAL,MSI,OHM,SOA
	Resistance	Power	Char.	Term.	Resistance Tol./	Level 1	Level 2	
Part Number	Value (Ohms)	Rating (mW)	(^)	Type (@)	Multiplier (#)	FRL (&)	FRL (&)	Manufacturer
M55342^04@44#2&	44.2	100 (char. E, H) or 150 (char. K, M)	E, H, K, M	B, C, W	D	S, T	P, R	DAL,MSI,OHM,SOA
M55342^04@45#3&	45.3	100 (char. E, H) or 150 (char. K, M)	E, H, K, M	B, C, W	D	S, T	P, R	DAL,MSI,OHM,SOA
M55342^04@46#4&	46.4	100 (char. E, H) or 150 (char. K, M)	E, H, K, M	B, C, W	D	S, T	P, R	DAL,MSI,OHM,SOA
M55342^04@47#0&	47.0	100 (char. E, H) or 150 (char. K, M)	E, H, K, M	B, C, W	G, J, M	S, T	P, R	DAL,MSI,OHM,SOA
M55342^04@47#5&	47.5	100 (char. E, H) or 150 (char. K, M)	E, H, K, M	B, C, W	D	S, T	P, R	DAL,MSI,OHM,SOA
M55342^04@48#7&	48.7	100 (char. E, H) or 150 (char. K, M)	E, H, K, M	B, C, W	D	S, T	P, R	DAL,MSI,OHM,SOA
M55342^04@49#9&	49.9	100 (char. E, H) or 150 (char. K, M)	E, H, K, M	B, C, W	D	S, T	P, R	DAL,MSI,OHM,SOA
M55342^04@51#0&	51.0	100 (char. E, H) or 150 (char. K, M)	E, H, K, M	B, C, W	G, J	S, T	P, R	DAL,MSI,OHM,SOA
M55342^04@51#1&	51.1	100 (char. E, H) or 150 (char. K, M)	E, H, K, M	B, C, W	D	S, T	P, R	DAL,MSI,OHM,SOA
	Resistance	Power	Char.	Term.	Resistance Tol./	Level 1	Level 2	
Part Number	Value (Ohms)	Rating (mW)	(^)	Type (@)	Multiplier (#)	FRL (&)	FRL (&)	Manufacturer
M55342^04@52#3&	52.3	100 (char. E, H) or 150 (char. K, M)	E, H, K, M	B, C, W	D	S, T	P, R	DAL,MSI,OHM,SOA
M55342^04@53#6&	53.6	100 (char. E, H) or 150 (char. K, M)	E, H, K, M	B, C, W	D	S, T	P, R	DAL,MSI,OHM,SOA
M55342^04@54#9&	54.9	100 (char. E, H) or 150 (char. K, M)	E, H, K, M	B, C, W	D	S, T	P, R	DAL,MSI,OHM,SOA
M55342^04@56#0&	56.0	100 (char. E, H) or 150 (char. K, M)	E, H, K, M	B, C, W	G, J, M	S, T	P, R	DAL,MSI,OHM,SOA
M55342^04@56#2&	56.2	100 (char. E, H) or 150 (char. K, M)	E, H, K, M	B, C, W	D	S, T	P, R	DAL,MSI,OHM,SOA
M55342^04@57#6&	57.6	100 (char. E, H) or 150 (char. K, M)	E, H, K, M	B, C, W	D	S, T	P, R	DAL,MSI,OHM,SOA
M55342^04@59#0&	59.0	100 (char. E, H) or 150 (char. K, M)	E, H, K, M	B, C, W	D	S, T	P, R	DAL,MSI,OHM,SOA
M55342^04@60#4&	60.4	100 (char. E, H) or 150 (char. K, M)	E, H, K, M	B, C, W	D	S, T	P, R	DAL,MSI,OHM,SOA
M55342^04@61#9&	61.9	100 (char. E, H) or 150 (char. K, M)	E, H, K, M	B, C, W	D	S, T	P, R	DAL,MSI,OHM,SOA
	Resistance	Power	Char.	Term.	Resistance Tol./	Level 1	Level 2	
Part Number	Value (Ohms)	Rating (mW)	(^)	Type (@)	Multiplier (#)	FRL (&)	FRL (&)	Manufacturer
M55342^04@62#0&	62.0	100 (char. E, H) or 150 (char. K, M)	E, H, K, M	B, C, W	G, J	S, T	P, R	DAL,MSI,OHM,SOA
M55342^04@63#4&	63.4	100 (char. E, H) or 150 (char. K, M)	E, H, K, M	B, C, W	D	S, T	P, R	DAL,MSI,OHM,SOA
M55342^04@64#9&	64.9	100 (char. E, H) or 150 (char. K, M)	E, H, K, M	B, C, W	D	S, T	P, R	DAL,MSI,OHM,SOA
M55342^04@66#5&	66.5	100 (char. E, H) or 150 (char. K, M)	E, H, K, M	B, C, W	D	S, T	P, R	DAL,MSI,OHM,SOA
M55342^04@68#0&	68.0	100 (char. E, H) or 150 (char. K, M)	E, H, K, M	B, C, W	G, J, M	S, T	P, R	DAL,MSI,OHM,SOA
M55342^04@68#1&	68.1	100 (char. E, H) or 150 (char. K, M)	E, H, K, M	B, C, W	D	S, T	P, R	DAL,MSI,OHM,SOA
M55342^04@69#8&	69.8	100 (char. E, H) or 150 (char. K, M)	E, H, K, M	B, C, W	D	S, T	P, R	DAL,MSI,OHM,SOA

M55342^04@71#5&	71.5	100 (char. E, H) or 150 (char. K, M)	E, H, K, M	B, C, W	D	S, T	P, R	DAL,MSI,OHM,SOA
M55342^04@73#2&	73.2	100 (char. E, H) or 150 (char. K, M)	E, H, K, M	B, C, W	D	S, T	P, R	DAL,MSI,OHM,SOA
	Resistance	Power	Char.	Term.	Resistance Tol./	Level 1	Level 2	
Part Number	Value (Ohms)	Rating (mW)	(^)	Type (@)	Multiplier (#)	FRL (&)	FRL (&)	Manufacturer
M55342^04@75#0&	75.0	100 (char. E, H) or 150 (char. K, M)	E, H, K, M	B, C, W	D, G, J	S, T	P, R	DAL,MSI,OHM,SOA
M55342^04@76#8&	76.8	100 (char. E, H) or 150 (char. K, M)	E, H, K, M	B, C, W	D	S, T	P, R	DAL,MSI,OHM,SOA
M55342^04@78#7&	78.7	100 (char. E, H) or 150 (char. K, M)	E, H, K, M	B, C, W	D	S, T	P, R	DAL,MSI,OHM,SOA
M55342^04@80#6&	80.6	100 (char. E, H) or 150 (char. K, M)	E, H, K, M	B, C, W	D	S, T	P, R	DAL,MSI,OHM,SOA
M55342^04@82#0&	82.0	100 (char. E, H) or 150 (char. K, M)	E, H, K, M	B, C, W	G, J, M	S, T	P, R	DAL,MSI,OHM,SOA
M55342^04@82#5&	82.5	100 (char. E, H) or 150 (char. K, M)	E, H, K, M	B, C, W	D	S, T	P, R	DAL,MSI,OHM,SOA
M55342^04@84#5&	84.5	100 (char. E, H) or 150 (char. K, M)	E, H, K, M	B, C, W	D	S, T	P, R	DAL,MSI,OHM,SOA
M55342^04@86#6&	86.6	100 (char. E, H) or 150 (char. K, M)	E, H, K, M	B, C, W	D	S, T	P, R	DAL,MSI,OHM,SOA
M55342^04@88#7&	88.7	100 (char. E, H) or 150 (char. K, M)	E, H, K, M	B, C, W	D	S, T	P, R	DAL,MSI,OHM,SOA
	Resistance	Power	Char.	Term.	Resistance Tol./	Level 1	Level 2	
Part Number	Value (Ohms)	Rating (mW)	(^)	Type (@)	Multiplier (#)	FRL (&)	FRL (&)	Manufacturer
M55342^04@90#9&	90.9	100 (char. E, H) or 150 (char. K, M)	E, H, K, M	B, C, W	D	S, T	P, R	DAL,MSI,OHM,SOA
M55342^04@91#0&	91.0	100 (char. E, H) or 150 (char. K, M)	E, H, K, M	B, C, W	G, J	S, T	P, R	DAL,MSI,OHM,SOA
M55342^04@93#1&	93.1	100 (char. E, H) or 150 (char. K, M)	E, H, K, M	B, C, W	D	S, T	P, R	DAL,MSI,OHM,SOA
M55342^04@95#3&	95.3	100 (char. E, H) or 150 (char. K, M)	E, H, K, M	B, C, W	D	S, T	P, R	DAL,MSI,OHM,SOA
M55342^04@97#6&	97.6	100 (char. E, H) or 150 (char. K, M)	E, H, K, M	B, C, W	D	S, T	P, R	DAL,MSI,OHM,SOA
	Resistance	Power	Char.	Term.	Resistance Tol./	Level 1	Level 2	
Part Number	Value (Ohms)	Rating (mW)	(^)	Type (@)	Multiplier (#)	FRL (&)	FRL (&)	Manufacturer

MIL-PRF-55342/4 (RM1505) Film Chip Resistors: 100 Ohms Through 976 Ohms

	Resistance	Power	Char.	Term.	Resistance Tol./	Level 1	Level 2	
Part Number	Value (Ohms)	Rating (mW)	(^)	Type (@)	Multiplier (#)	FRL (&)	FRL (&)	Manufacturer
M55342^04@100#&	100	100 (char. E, H) or 150 (char. K, M)	E, H, K, M	B, C, W	D, G, J, M	S, T	P, R	DAL,MSI,OHM,SOA
M55342^04@102#&	102	100 (char. E, H) or 150 (char. K, M)	E, H, K, M	B, C, W	D	S, T	P, R	DAL,MSI,OHM,SOA
M55342^04@105#&	105	100 (char. E, H) or 150 (char. K, M)	E, H, K, M	B, C, W	D	S, T	P, R	DAL,MSI,OHM,SOA
M55342^04@107#&	107	100 (char. E, H) or 150 (char. K, M)	E, H, K, M	B, C, W	D	S, T	P, R	DAL,MSI,OHM,SOA
M55342^04@110#&	110	100 (char. E, H) or 150 (char. K, M)	E, H, K, M	B, C, W	D, G, J	S, T	P, R	DAL,MSI,OHM,SOA
M55342^04@113#&	113	100 (char. E, H) or 150 (char. K, M)	E, H, K, M	B, C, W	D	S, T	P, R	DAL,MSI,OHM,SOA
M55342^04@115#&	115	100 (char. E, H) or 150 (char. K, M)	E, H, K, M	B, C, W	D	S, T	P, R	DAL,MSI,OHM,SOA
M55342^04@118#&	118	100 (char. E, H) or 150 (char. K, M)	E, H, K, M	B, C, W	D	S, T	P, R	DAL,MSI,OHM,SOA
M55342^04@120#&	120	100 (char. E, H) or 150 (char. K, M)	E, H, K, M	B, C, W	G, J, M	S, T	P, R	DAL,MSI,OHM,SOA
M55342^04@121#&	121	100 (char. E, H) or 150 (char. K, M)	E, H, K, M	B, C, W	D	S, T	P, R	DAL,MSI,OHM,SOA
	Resistance	Power	Char.	Term.	Resistance Tol./	Level 1	Level 2	
Part Number	Value (Ohms)	Rating (mW)	(^)	Type (@)	Multiplier (#)	FRL (&)	FRL (&)	Manufacturer
M55342^04@124#&	124	100 (char. E, H) or 150 (char. K, M)	E, H, K, M	B, C, W	D	S, T	P, R	DAL,MSI,OHM,SOA
M55342^04@127#&	127	100 (char. E, H) or 150 (char. K, M)	E, H, K, M	B, C, W	D	S, T	P, R	DAL,MSI,OHM,SOA
M55342^04@130#&	130	100 (char. E, H) or 150 (char. K, M)	E, H, K, M	B, C, W	D, G, J	S, T	P, R	DAL,MSI,OHM,SOA
M55342^04@133#&	133	100 (char. E, H) or 150 (char. K, M)	E, H, K, M	B, C, W	D	S, T	P, R	DAL,MSI,OHM,SOA
M55342^04@137#&	137	100 (char. E, H) or 150 (char. K, M)	E, H, K, M	B, C, W	D	S, T	P, R	DAL,MSI,OHM,SOA
M55342^04@140#&	140	100 (char. E, H) or 150 (char. K, M)	E, H, K, M	B, C, W	D	S, T	P, R	DAL,MSI,OHM,SOA

M55342^04@143#&	143	100 (char. E, H) or 150 (char. K, M)	E, H, K, M	B, C, W	D	S, T	P, R	DAL,MSI,OHM,SOA
M55342^04@147#&	147	100 (char. E, H) or 150 (char. K, M)	E, H, K, M	B, C, W	D	S, T	P, R	DAL,MSI,OHM,SOA
M55342^04@150#&	150	100 (char. E, H) or 150 (char. K, M)	E, H, K, M	B, C, W	D, G, J, M	S, T	P, R	DAL,MSI,OHM,SOA
	Resistance	Power	Char.	Term.	Resistance Tol./	Level 1	Level 2	
Part Number	Value (Ohms)	Rating (mW)	(^)	Type (@)	Multiplier (#)	FRL (&)	FRL (&)	Manufacturer
M55342^04@154#&	154	100 (char. E, H) or 150 (char. K, M)	E, H, K, M	B, C, W	D	S, T	P, R	DAL,MSI,OHM,SOA
M55342^04@158#&	158	100 (char. E, H) or 150 (char. K, M)	E, H, K, M	B, C, W	D	S, T	P, R	DAL,MSI,OHM,SOA
M55342^04@160#&	160	100 (char. E, H) or 150 (char. K, M)	E, H, K, M	B, C, W	G, J	S, T	P, R	DAL,MSI,OHM,SOA
M55342^04@162#&	162	100 (char. E, H) or 150 (char. K, M)	E, H, K, M	B, C, W	D	S, T	P, R	DAL,MSI,OHM,SOA
M55342^04@165#&	165	100 (char. E, H) or 150 (char. K, M)	E, H, K, M	B, C, W	D	S, T	P, R	DAL,MSI,OHM,SOA
M55342^04@169#&	169	100 (char. E, H) or 150 (char. K, M)	E, H, K, M	B, C, W	D	S, T	P, R	DAL,MSI,OHM,SOA
M55342^04@174#&	174	100 (char. E, H) or 150 (char. K, M)	E, H, K, M	B, C, W	D	S, T	P, R	DAL,MSI,OHM,SOA
M55342^04@178#&	178	100 (char. E, H) or 150 (char. K, M)	E, H, K, M	B, C, W	D	S, T	P, R	DAL,MSI,OHM,SOA
M55342^04@180#&	180	100 (char. E, H) or 150 (char. K, M)	E, H, K, M	B, C, W	G, J, M	S, T	P, R	DAL,MSI,OHM,SOA
	Resistance	Power	Char.	Term.	Resistance Tol./	Level 1	Level 2	
Part Number	Value (Ohms)	Rating (mW)	(^)	Type (@)	Multiplier (#)	FRL (&)	FRL (&)	Manufacturer
M55342^04@182#&	182	100 (char. E, H) or 150 (char. K, M)	E, H, K, M	B, C, W	D	S, T	P, R	DAL,MSI,OHM,SOA
M55342^04@187#&	187	100 (char. E, H) or 150 (char. K, M)	E, H, K, M	B, C, W	D	S, T	P, R	DAL,MSI,OHM,SOA
M55342^04@191#&	191	100 (char. E, H) or 150 (char. K, M)	E, H, K, M	B, C, W	D	S, T	P, R	DAL,MSI,OHM,SOA
M55342^04@196#&	196	100 (char. E, H) or 150 (char. K, M)	E, H, K, M	B, C, W	D	S, T	P, R	DAL,MSI,OHM,SOA
M55342^04@200#&	200	100 (char. E, H) or 150 (char. K, M)	E, H, K, M	B, C, W	D, G, J, M	S, T	P, R	DAL,MSI,OHM,SOA
M55342^04@205#&	205	100 (char. E, H) or 150 (char. K, M)	E, H, K, M	B, C, W	D	S, T	P, R	DAL,MSI,OHM,SOA
M55342^04@210#&	210	100 (char. E, H) or 150 (char. K, M)	E, H, K, M	B, C, W	D	S, T	P, R	DAL,MSI,OHM,SOA
M55342^04@215#&	215	100 (char. E, H) or 150 (char. K, M)	E, H, K, M	B, C, W	D	S, T	P, R	DAL,MSI,OHM,SOA
M55342^04@220#&	220	100 (char. E, H) or 150 (char. K, M)	E, H, K, M	B, C, W	G, J, M	S, T	P, R	DAL,MSI,OHM,SOA
	Resistance	Power	Char.	Term.	Resistance Tol./	Level 1	Level 2	
Part Number	Value (Ohms)	Rating (mW)	(^)	Type (@)	Multiplier (#)	FRL (&)	FRL (&)	Manufacturer
M55342^04@221#&	221	100 (char. E, H) or 150 (char. K, M)	E, H, K, M	B, C, W	D	S, T	P, R	DAL,MSI,OHM,SOA
M55342^04@226#&	226	100 (char. E, H) or 150 (char. K, M)	E, H, K, M	B, C, W	D	S, T	P, R	DAL,MSI,OHM,SOA
M55342^04@232#&	232	100 (char. E, H) or 150 (char. K, M)	E, H, K, M	B, C, W	D	S, T	P, R	DAL,MSI,OHM,SOA
M55342^04@237#&	237	100 (char. E, H) or 150 (char. K, M)	E, H, K, M	B, C, W	D	S, T	P, R	DAL,MSI,OHM,SOA
M55342^04@240#&	240	100 (char. E, H) or 150 (char. K, M)	E, H, K, M	B, C, W	G, J	S, T	P, R	DAL,MSI,OHM,SOA
M55342^04@243#&	243	100 (char. E, H) or 150 (char. K, M)	E, H, K, M	B, C, W	D	S, T	P, R	DAL,MSI,OHM,SOA
M55342^04@249#&	249	100 (char. E, H) or 150 (char. K, M)	E, H, K, M	B, C, W	D	S, T	P, R	DAL,MSI,OHM,SOA
M55342^04@255#&	255	100 (char. E, H) or 150 (char. K, M)	E, H, K, M	B, C, W	D	S, T	P, R	DAL,MSI,OHM,SOA
M55342^04@261#&	261	100 (char. E, H) or 150 (char. K, M)	E, H, K, M	B, C, W	D	S, T	P, R	DAL,MSI,OHM,SOA
	Resistance	Power	Char.	Term.	Resistance Tol./	Level 1	Level 2	
Part Number	Value (Ohms)	Rating (mW)	(^)	Type (@)	Multiplier (#)	FRL (&)	FRL (&)	Manufacturer
M55342^04@267#&	267	100 (char. E, H) or 150 (char. K, M)	E, H, K, M	B, C, W	D	S, T	P, R	DAL,MSI,OHM,SOA
M55342^04@270#&	270	100 (char. E, H) or 150 (char. K, M)	E, H, K, M	B, C, W	G, J, M	S, T	P, R	DAL,MSI,OHM,SOA
M55342^04@274#&	274	100 (char. E, H) or 150 (char. K, M)	E, H, K, M	B, C, W	D	S, T	P, R	DAL,MSI,OHM,SOA
M55342^04@280#&	280	100 (char. E, H) or 150 (char. K, M)	E, H, K, M	B, C, W	D	S, T	P, R	DAL,MSI,OHM,SOA
M55342^04@287#&	287	100 (char. E, H) or 150 (char. K, M)	E, H, K, M	B, C, W	D	S, T	P, R	DAL,MSI,OHM,SOA
M55342^04@294#&	294	100 (char. E, H) or 150 (char. K, M)	E, H, K, M	B, C, W	D	S, T	P, R	DAL,MSI,OHM,SOA
M55342^04@300#&	300	100 (char. E, H) or 150 (char. K, M)	E, H, K, M	B, C, W	G, J	S, T	P, R	DAL,MSI,OHM,SOA
M55342^04@301#&	301	100 (char. E, H) or 150 (char. K, M)	E, H, K, M	B, C, W	D	S, T	P, R	DAL,MSI,OHM,SOA
M55342^04@309#&	309	100 (char. E, H) or 150 (char. K, M)	E, H, K, M	B, C, W	D	S, T	P, R	DAL,MSI,OHM,SOA

	Resistance	Power	Char.	Term.	Resistance Tol./	Level 1	Level 2	
Part Number	Value (Ohms)	Rating (mW)	(^)	Type (@)	Multiplier (#)	FRL (&)	FRL (&)	Manufacturer
M55342^04@316#&	316	100 (char. E, H) or 150 (char. K, M)	E, H, K, M	B, C, W	D	S, T	P, R	DAL,MSI,OHM,SOA
M55342^04@324#&	324	100 (char. E, H) or 150 (char. K, M)	E, H, K, M	B, C, W	D	S, T	P, R	DAL,MSI,OHM,SOA
M55342^04@330#&	330	100 (char. E, H) or 150 (char. K, M)	E, H, K, M	B, C, W	G, J, M	S, T	P, R	DAL,MSI,OHM,SOA
M55342^04@332#&	332	100 (char. E, H) or 150 (char. K, M)	E, H, K, M	B, C, W	D	S, T	P, R	DAL,MSI,OHM,SOA
M55342^04@340#&	340	100 (char. E, H) or 150 (char. K, M)	E, H, K, M	B, C, W	D	S, T	P, R	DAL,MSI,OHM,SOA
M55342^04@348#&	348	100 (char. E, H) or 150 (char. K, M)	E, H, K, M	B, C, W	D	S, T	P, R	DAL,MSI,OHM,SOA
M55342^04@357#&	357	100 (char. E, H) or 150 (char. K, M)	E, H, K, M	B, C, W	D	S, T	P, R	DAL,MSI,OHM,SOA
M55342^04@360#&	360	100 (char. E, H) or 150 (char. K, M)	E, H, K, M	B, C, W	G, J	S, T	P, R	DAL,MSI,OHM,SOA
M55342^04@365#&	365	100 (char. E, H) or 150 (char. K, M)	E, H, K, M	B, C, W	D	S, T	P, R	DAL,MSI,OHM,SOA
	Resistance	Power	Char.	Term.	Resistance Tol./	Level 1	Level 2	
Part Number	Value (Ohms)	Rating (mW)	(^)	Type (@)	Multiplier (#)	FRL (&)	FRL (&)	Manufacturer
M55342^04@374#&	374	100 (char. E, H) or 150 (char. K, M)	E, H, K, M	B, C, W	D	S, T	P, R	DAL,MSI,OHM,SOA
M55342^04@383#&	383	100 (char. E, H) or 150 (char. K, M)	E, H, K, M	B, C, W	D	S, T	P, R	DAL,MSI,OHM,SOA
M55342^04@390#&	390	100 (char. E, H) or 150 (char. K, M)	E, H, K, M	B, C, W	G, J, M	S, T	P, R	DAL,MSI,OHM,SOA
M55342^04@392#&	392	100 (char. E, H) or 150 (char. K, M)	E, H, K, M	B, C, W	D	S, T	P, R	DAL,MSI,OHM,SOA
M55342^04@402#&	402	100 (char. E, H) or 150 (char. K, M)	E, H, K, M	B, C, W	D	S, T	P, R	DAL,MSI,OHM,SOA
M55342^04@412#&	412	100 (char. E, H) or 150 (char. K, M)	E, H, K, M	B, C, W	D	S, T	P, R	DAL,MSI,OHM,SOA
M55342^04@422#&	422	100 (char. E, H) or 150 (char. K, M)	E, H, K, M	B, C, W	D	S, T	P, R	DAL,MSI,OHM,SOA
M55342^04@430#&	430	100 (char. E, H) or 150 (char. K, M)	E, H, K, M	B, C, W	G, J	S, T	P, R	DAL,MSI,OHM,SOA
M55342^04@432#&	432	100 (char. E, H) or 150 (char. K, M)	E, H, K, M	B, C, W	D	S, T	P, R	DAL,MSI,OHM,SOA
	Resistance	Power	Char.	Term.	Resistance Tol./	Level 1	Level 2	
Part Number	Value (Ohms)	Rating (mW)	(^)	Type (@)	Multiplier (#)	FRL (&)	FRL (&)	Manufacturer
M55342^04@442#&	442	100 (char. E, H) or 150 (char. K, M)	E, H, K, M	B, C, W	D	S, T	P, R	DAL,MSI,OHM,SOA
M55342^04@453#&	453	100 (char. E, H) or 150 (char. K, M)	E, H, K, M	B, C, W	D	S, T	P, R	DAL,MSI,OHM,SOA
M55342^04@464#&	464	100 (char. E, H) or 150 (char. K, M)	E, H, K, M	B, C, W	D	S, T	P, R	DAL,MSI,OHM,SOA
M55342^04@470#&	470	100 (char. E, H) or 150 (char. K, M)	E, H, K, M	B, C, W	G, J, M	S, T	P, R	DAL,MSI,OHM,SOA
M55342^04@475#&	475	100 (char. E, H) or 150 (char. K, M)	E, H, K, M	B, C, W	D	S, T	P, R	DAL,MSI,OHM,SOA
M55342^04@487#&	487	100 (char. E, H) or 150 (char. K, M)	E, H, K, M	B, C, W	D	S, T	P, R	DAL,MSI,OHM,SOA
M55342^04@499#&	499	100 (char. E, H) or 150 (char. K, M)	E, H, K, M	B, C, W	D	S, T	P, R	DAL,MSI,OHM,SOA
M55342^04@510#&	510	100 (char. E, H) or 150 (char. K, M)	E, H, K, M	B, C, W	G, J	S, T	P, R	DAL,MSI,OHM,SOA
M55342^04@511#&	511	100 (char. E, H) or 150 (char. K, M)	E, H, K, M	B, C, W	D	S, T	P, R	DAL,MSI,OHM,SOA
	Resistance	Power	Char.	Term.	Resistance Tol./	Level 1	Level 2	
Part Number	Value (Ohms)	Rating (mW)	(^)	Type (@)	Multiplier (#)	FRL (&)	FRL (&)	Manufacturer
M55342^04@523#&	523	100 (char. E, H) or 150 (char. K, M)	E, H, K, M	B, C, W	D	S, T	P, R	DAL,MSI,OHM,SOA
M55342^04@536#&	536	100 (char. E, H) or 150 (char. K, M)	E, H, K, M	B, C, W	D	S, T	P, R	DAL,MSI,OHM,SOA
M55342^04@549#&	549	100 (char. E, H) or 150 (char. K, M)	E, H, K, M	B, C, W	D	S, T	P, R	DAL,MSI,OHM,SOA
M55342^04@560#&	560	100 (char. E, H) or 150 (char. K, M)	E, H, K, M	B, C, W	G, J, M	S, T	P, R	DAL,MSI,OHM,SOA
M55342^04@562#&	562	100 (char. E, H) or 150 (char. K, M)	E, H, K, M	B, C, W	D	S, T	P, R	DAL,MSI,OHM,SOA
M55342^04@576#&	576	100 (char. E, H) or 150 (char. K, M)	E, H, K, M	B, C, W	D	S, T	P, R	DAL,MSI,OHM,SOA
M55342^04@590#&	590	100 (char. E, H) or 150 (char. K, M)	E, H, K, M	B, C, W	D	S, T	P, R	DAL,MSI,OHM,SOA
M55342^04@604#&	604	100 (char. E, H) or 150 (char. K, M)	E, H, K, M	B, C, W	D	S, T	P, R	DAL,MSI,OHM,SOA
M55342^04@619#&	619	100 (char. E, H) or 150 (char. K, M)	E, H, K, M	B, C, W	D	S, T	P, R	DAL,MSI,OHM,SOA
	Resistance	Power	Char.	Term.	Resistance Tol./	Level 1	Level 2	
Part Number	Value (Ohms)	Rating (mW)	(^)	Type (@)	Multiplier (#)	FRL (&)	FRL (&)	Manufacturer
M55342^04@620#&	620	100 (char. E, H) or 150 (char. K, M)	E, H, K, M	B, C, W	G, J	S, T	P, R	DAL,MSI,OHM,SOA

M55342^04@634#&	634	100 (char. E, H) or 150 (char. K, M)	E, H, K, M	B, C, W	D	S, T	P, R	DAL,MSI,OHM,SOA
M55342^04@649#&	649	100 (char. E, H) or 150 (char. K, M)	E, H, K, M	B, C, W	D	S, T	P, R	DAL,MSI,OHM,SOA
M55342^04@665#&	665	100 (char. E, H) or 150 (char. K, M)	E, H, K, M	B, C, W	D	S, T	P, R	DAL,MSI,OHM,SOA
M55342^04@680#&	680	100 (char. E, H) or 150 (char. K, M)	E, H, K, M	B, C, W	G, J, M	S, T	P, R	DAL,MSI,OHM,SOA
M55342^04@681#&	681	100 (char. E, H) or 150 (char. K, M)	E, H, K, M	B, C, W	D	S, T	P, R	DAL,MSI,OHM,SOA
M55342^04@698#&	698	100 (char. E, H) or 150 (char. K, M)	E, H, K, M	B, C, W	D	S, T	P, R	DAL,MSI,OHM,SOA
M55342^04@715#&	715	100 (char. E, H) or 150 (char. K, M)	E, H, K, M	B, C, W	D	S, T	P, R	DAL,MSI,OHM,SOA
M55342^04@732#&	732	100 (char. E, H) or 150 (char. K, M)	E, H, K, M	B, C, W	D	S, T	P, R	DAL,MSI,OHM,SOA
	Resistance	Power	Char.	Term.	Resistance Tol./	Level 1	Level 2	
Part Number	Value (Ohms)	Rating (mW)	(^)	Type (@)	Multiplier (#)	FRL (&)	FRL (&)	Manufacturer
M55342^04@750#&	750	100 (char. E, H) or 150 (char. K, M)	E, H, K, M	B, C, W	D, G, J	S, T	P, R	DAL,MSI,OHM,SOA
M55342^04@768#&	768	100 (char. E, H) or 150 (char. K, M)	E, H, K, M	B, C, W	D	S, T	P, R	DAL,MSI,OHM,SOA
M55342^04@787#&	787	100 (char. E, H) or 150 (char. K, M)	E, H, K, M	B, C, W	D	S, T	P, R	DAL,MSI,OHM,SOA
M55342^04@806#&	806	100 (char. E, H) or 150 (char. K, M)	E, H, K, M	B, C, W	D	S, T	P, R	DAL,MSI,OHM,SOA
M55342^04@820#&	820	100 (char. E, H) or 150 (char. K, M)	E, H, K, M	B, C, W	G, J, M	S, T	P, R	DAL,MSI,OHM,SOA
M55342^04@825#&	825	100 (char. E, H) or 150 (char. K, M)	E, H, K, M	B, C, W	D	S, T	P, R	DAL,MSI,OHM,SOA
M55342^04@845#&	845	100 (char. E, H) or 150 (char. K, M)	E, H, K, M	B, C, W	D	S, T	P, R	DAL,MSI,OHM,SOA
M55342^04@866#&	866	100 (char. E, H) or 150 (char. K, M)	E, H, K, M	B, C, W	D	S, T	P, R	DAL,MSI,OHM,SOA
M55342^04@887#&	887	100 (char. E, H) or 150 (char. K, M)	E, H, K, M	B, C, W	D	S, T	P, R	DAL,MSI,OHM,SOA
	Resistance	Power	Char.	Term.	Resistance Tol./	Level 1	Level 2	
Part Number	Value (Ohms)	Rating (mW)	(^)	Type (@)	Multiplier (#)	FRL (&)	FRL (&)	Manufacturer
M55342^04@909#&	909	100 (char. E, H) or 150 (char. K, M)	E, H, K, M	B, C, W	D	S, T	P, R	DAL,MSI,OHM,SOA
M55342^04@910#&	910	100 (char. E, H) or 150 (char. K, M)	E, H, K, M	B, C, W	G, J	S, T	P, R	DAL,MSI,OHM,SOA
M55342^04@931#&	931	100 (char. E, H) or 150 (char. K, M)	E, H, K, M	B, C, W	D	S, T	P, R	DAL,MSI,OHM,SOA
M55342^04@953#&	953	100 (char. E, H) or 150 (char. K, M)	E, H, K, M	B, C, W	D	S, T	P, R	DAL,MSI,OHM,SOA
M55342^04@976#&	976	100 (char. E, H) or 150 (char. K, M)	E, H, K, M	B, C, W	D	S, T	P, R	DAL,MSI,OHM,SOA
	Resistance	Power	Char.	Term.	Resistance Tol./	Level 1	Level 2	
Part Number	Value (Ohms)	Rating (mW)	(^)	Type (@)	Multiplier (#)	FRL (&)	FRL (&)	Manufacturer

MIL-PRF-55342/4 (RM1505) Film Chip Resistors: 1,000 Ohms Through 9,760 Ohms

	Resistance	Power	Char.	Term.	Resistance Tol./	Level 1	Level 2	
Part Number	Value (Ohms)	Rating (mW)	(^)	Type (@)	Multiplier (#)	FRL (&)	FRL (&)	Manufacturer
M55342^04@1#00&	1,000	100 (char. E, H) or 150 (char. K, M)	E, H, K, M	B, C, W	E, H, K, N	S, T	P, R	DAL,MSI,OHM,SOA
M55342^04@1#02&	1,020	100 (char. E, H) or 150 (char. K, M)	E, H, K, M	B, C, W	E	S, T	P, R	DAL,MSI,OHM,SOA
M55342^04@1#05&	1,050	100 (char. E, H) or 150 (char. K, M)	E, H, K, M	B, C, W	E	S, T	P, R	DAL,MSI,OHM,SOA
M55342^04@1#07&	1,070	100 (char. E, H) or 150 (char. K, M)	E, H, K, M	B, C, W	E	S, T	P, R	DAL,MSI,OHM,SOA
M55342^04@1#10&	1,100	100 (char. E, H) or 150 (char. K, M)	E, H, K, M	B, C, W	E, H, K	S, T	P, R	DAL,MSI,OHM,SOA
M55342^04@1#13&	1,130	100 (char. E, H) or 150 (char. K, M)	E, H, K, M	B, C, W	E	S, T	P, R	DAL,MSI,OHM,SOA
M55342^04@1#15&	1,150	100 (char. E, H) or 150 (char. K, M)	E, H, K, M	B, C, W	E	S, T	P, R	DAL,MSI,OHM,SOA
M55342^04@1#18&	1,180	100 (char. E, H) or 150 (char. K, M)	E, H, K, M	B, C, W	E	S, T	P, R	DAL,MSI,OHM,SOA
M55342^04@1#20&	1,200	100 (char. E, H) or 150 (char. K, M)	E, H, K, M	B, C, W	H, K, N	S, T	P, R	DAL,MSI,OHM,SOA
M55342^04@1#21&	1,210	100 (char. E, H) or 150 (char. K, M)	E, H, K, M	B, C, W	E	S, T	P, R	DAL,MSI,OHM,SOA
	Resistance	Power	Char.	Term.	Resistance Tol./	Level 1	Level 2	
Part Number	Value (Ohms)	Rating (mW)	(^)	Type (@)	Multiplier (#)	FRL (&)	FRL (&)	Manufacturer

M55342^04@1#24&	1,240	100 (char. E, H) or 150 (char. K, M)	E, H, K, M	B, C, W	E	S, T	P, R	DAL,MSI,OHM,SOA
M55342^04@1#27&	1,270	100 (char. E, H) or 150 (char. K, M)	E, H, K, M	B, C, W	E	S, T	P, R	DAL,MSI,OHM,SOA
M55342^04@1#30&	1,300	100 (char. E, H) or 150 (char. K, M)	E, H, K, M	B, C, W	E, H, K	S, T	P, R	DAL,MSI,OHM,SOA
M55342^04@1#33&	1,330	100 (char. E, H) or 150 (char. K, M)	E, H, K, M	B, C, W	E	S, T	P, R	DAL,MSI,OHM,SOA
M55342^04@1#37&	1,370	100 (char. E, H) or 150 (char. K, M)	E, H, K, M	B, C, W	E	S, T	P, R	DAL,MSI,OHM,SOA
M55342^04@1#40&	1,400	100 (char. E, H) or 150 (char. K, M)	E, H, K, M	B, C, W	E	S, T	P, R	DAL,MSI,OHM,SOA
M55342^04@1#43&	1,430	100 (char. E, H) or 150 (char. K, M)	E, H, K, M	B, C, W	E	S, T	P, R	DAL,MSI,OHM,SOA
M55342^04@1#47&	1,470	100 (char. E, H) or 150 (char. K, M)	E, H, K, M	B, C, W	E	S, T	P, R	DAL,MSI,OHM,SOA
M55342^04@1#50&	1,500	100 (char. E, H) or 150 (char. K, M)	E, H, K, M	B, C, W	E, H, K, N	S, T	P, R	DAL,MSI,OHM,SOA
	Resistance	Power	Char.	Term.	Resistance Tol./	Level 1	Level 2	
Part Number	Value (Ohms)	Rating (mW)	(^)	Type (@)	Multiplier (#)	FRL (&)	FRL (&)	Manufacturer
M55342^04@1#54&	1,540	100 (char. E, H) or 150 (char. K, M)	E, H, K, M	B, C, W	E	S, T	P, R	DAL,MSI,OHM,SOA
M55342^04@1#58&	1,580	100 (char. E, H) or 150 (char. K, M)	E, H, K, M	B, C, W	E	S, T	P, R	DAL,MSI,OHM,SOA
M55342^04@1#60&	1,600	100 (char. E, H) or 150 (char. K, M)	E, H, K, M	B, C, W	H, K	S, T	P, R	DAL,MSI,OHM,SOA
M55342^04@1#62&	1,620	100 (char. E, H) or 150 (char. K, M)	E, H, K, M	B, C, W	E	S, T	P, R	DAL,MSI,OHM,SOA
M55342^04@1#65&	1,650	100 (char. E, H) or 150 (char. K, M)	E, H, K, M	B, C, W	E	S, T	P, R	DAL,MSI,OHM,SOA
M55342^04@1#69&	1,690	100 (char. E, H) or 150 (char. K, M)	E, H, K, M	B, C, W	E	S, T	P, R	DAL,MSI,OHM,SOA
M55342^04@1#74&	1,740	100 (char. E, H) or 150 (char. K, M)	E, H, K, M	B, C, W	E	S, T	P, R	DAL,MSI,OHM,SOA
M55342^04@1#78&	1,780	100 (char. E, H) or 150 (char. K, M)	E, H, K, M	B, C, W	E	S, T	P, R	DAL,MSI,OHM,SOA
M55342^04@1#80&	1,800	100 (char. E, H) or 150 (char. K, M)	E, H, K, M	B, C, W	H, K, N	S, T	P, R	DAL,MSI,OHM,SOA
	Resistance	Power	Char.	Term.	Resistance Tol./	Level 1	Level 2	
Part Number	Value (Ohms)	Rating (mW)	(^)	Type (@)	Multiplier (#)	FRL (&)	FRL (&)	Manufacturer
M55342^04@1#82&	1,820	100 (char. E, H) or 150 (char. K, M)	E, H, K, M	B, C, W	E	S, T	P, R	DAL,MSI,OHM,SOA
M55342^04@1#87&	1,870	100 (char. E, H) or 150 (char. K, M)	E, H, K, M	B, C, W	E	S, T	P, R	DAL,MSI,OHM,SOA
M55342^04@1#91&	1,910	100 (char. E, H) or 150 (char. K, M)	E, H, K, M	B, C, W	E	S, T	P, R	DAL,MSI,OHM,SOA
M55342^04@1#96&	1,960	100 (char. E, H) or 150 (char. K, M)	E, H, K, M	B, C, W	E	S, T	P, R	DAL,MSI,OHM,SOA
M55342^04@2#00&	2,000	100 (char. E, H) or 150 (char. K, M)	E, H, K, M	B, C, W	E, H, K, N	S, T	P, R	DAL,MSI,OHM,SOA
M55342^04@2#05&	2,050	100 (char. E, H) or 150 (char. K, M)	E, H, K, M	B, C, W	E	S, T	P, R	DAL,MSI,OHM,SOA
M55342^04@2#10&	2,100	100 (char. E, H) or 150 (char. K, M)	E, H, K, M	B, C, W	E	S, T	P, R	DAL,MSI,OHM,SOA
M55342^04@2#15&	2,150	100 (char. E, H) or 150 (char. K, M)	E, H, K, M	B, C, W	E	S, T	P, R	DAL,MSI,OHM,SOA
M55342^04@2#20&	2,200	100 (char. E, H) or 150 (char. K, M)	E, H, K, M	B, C, W	H, K, N	S, T	P, R	DAL,MSI,OHM,SOA
	Resistance	Power	Char.	Term.	Resistance Tol./	Level 1	Level 2	
Part Number	Value (Ohms)	Rating (mW)	(^)	Type (@)	Multiplier (#)	FRL (&)	FRL (&)	Manufacturer
M55342^04@2#21&	2,210	100 (char. E, H) or 150 (char. K, M)	E, H, K, M	B, C, W	E	S, T	P, R	DAL,MSI,OHM,SOA
M55342^04@2#26&	2,260	100 (char. E, H) or 150 (char. K, M)	E, H, K, M	B, C, W	E	S, T	P, R	DAL,MSI,OHM,SOA
M55342^04@2#32&	2,320	100 (char. E, H) or 150 (char. K, M)	E, H, K, M	B, C, W	E	S, T	P, R	DAL,MSI,OHM,SOA
M55342^04@2#37&	2,370	100 (char. E, H) or 150 (char. K, M)	E, H, K, M	B, C, W	E	S, T	P, R	DAL,MSI,OHM,SOA
M55342^04@2#40&	2,400	100 (char. E, H) or 150 (char. K, M)	E, H, K, M	B, C, W	H, K	S, T	P, R	DAL,MSI,OHM,SOA
M55342^04@2#43&	2,430	100 (char. E, H) or 150 (char. K, M)	E, H, K, M	B, C, W	E	S, T	P, R	DAL,MSI,OHM,SOA
M55342^04@2#49&	2,490	100 (char. E, H) or 150 (char. K, M)	E, H, K, M	B, C, W	E	S, T	P, R	DAL,MSI,OHM,SOA
M55342^04@2#55&	2,550	100 (char. E, H) or 150 (char. K, M)	E, H, K, M	B, C, W	E	S, T	P, R	DAL,MSI,OHM,SOA
M55342^04@2#61&	2,610	100 (char. E, H) or 150 (char. K, M)	E, H, K, M	B, C, W	E	S, T	P, R	DAL,MSI,OHM,SOA
	Resistance	Power	Char.	Term.	Resistance Tol./	Level 1	Level 2	
Part Number	Value (Ohms)	Rating (mW)	(^)	Type (@)	Multiplier (#)	FRL (&)	FRL (&)	Manufacturer
M55342^04@2#67&	2,670	100 (char. E, H) or 150 (char. K, M)	E, H, K, M	B, C, W	E	S, T	P, R	DAL,MSI,OHM,SOA
M55342^04@2#70&	2,700	100 (char. E, H) or 150 (char. K, M)	E, H, K, M	B, C, W	H, K, N	S, T	P, R	DAL,MSI,OHM,SOA
M55342^04@2#74&	2,740	100 (char. E, H) or 150 (char. K, M)	E, H, K, M	B, C, W	E	S, T	P, R	DAL,MSI,OHM,SOA

M55342^04@2#80&	2,800	100 (char. E, H) or 150 (char. K, M)	E, H, K, M	B, C, W	E	S, T	P, R	DAL,MSI,OHM,SOA
M55342^04@2#87&	2,870	100 (char. E, H) or 150 (char. K, M)	E, H, K, M	B, C, W	E	S, T	P, R	DAL,MSI,OHM,SOA
M55342^04@2#94&	2,940	100 (char. E, H) or 150 (char. K, M)	E, H, K, M	B, C, W	E	S, T	P, R	DAL,MSI,OHM,SOA
M55342^04@3#00&	3,000	100 (char. E, H) or 150 (char. K, M)	E, H, K, M	B, C, W	H, K	S, T	P, R	DAL,MSI,OHM,SOA
M55342^04@3#01&	3,010	100 (char. E, H) or 150 (char. K, M)	E, H, K, M	B, C, W	E	S, T	P, R	DAL,MSI,OHM,SOA
M55342^04@3#09&	3,090	100 (char. E, H) or 150 (char. K, M)	E, H, K, M	B, C, W	E	S, T	P, R	DAL,MSI,OHM,SOA
	Resistance	Power	Char.	Term.	Resistance Tol./	Level 1	Level 2	
Part Number	Value (Ohms)	Rating (mW)	(^)	Type (@)	Multiplier (#)	FRL (&)	FRL (&)	Manufacturer
M55342^04@3#16&	3,160	100 (char. E, H) or 150 (char. K, M)	E, H, K, M	B, C, W	E	S, T	P, R	DAL,MSI,OHM,SOA
M55342^04@3#24&	3,240	100 (char. E, H) or 150 (char. K, M)	E, H, K, M	B, C, W	E	S, T	P, R	DAL,MSI,OHM,SOA
M55342^04@3#30&	3,300	100 (char. E, H) or 150 (char. K, M)	E, H, K, M	B, C, W	H, K, N	S, T	P, R	DAL,MSI,OHM,SOA
M55342^04@3#32&	3,320	100 (char. E, H) or 150 (char. K, M)	E, H, K, M	B, C, W	E	S, T	P, R	DAL,MSI,OHM,SOA
M55342^04@3#40&	3,400	100 (char. E, H) or 150 (char. K, M)	E, H, K, M	B, C, W	E	S, T	P, R	DAL,MSI,OHM,SOA
M55342^04@3#48&	3,480	100 (char. E, H) or 150 (char. K, M)	E, H, K, M	B, C, W	E	S, T	P, R	DAL,MSI,OHM,SOA
M55342^04@3#57&	3,570	100 (char. E, H) or 150 (char. K, M)	E, H, K, M	B, C, W	E	S, T	P, R	DAL,MSI,OHM,SOA
M55342^04@3#60&	3,600	100 (char. E, H) or 150 (char. K, M)	E, H, K, M	B, C, W	H, K	S, T	P, R	DAL,MSI,OHM,SOA
M55342^04@3#65&	3,650	100 (char. E, H) or 150 (char. K, M)	E, H, K, M	B, C, W	E	S, T	P, R	DAL,MSI,OHM,SOA
	Resistance	Power	Char.	Term.	Resistance Tol./	Level 1	Level 2	
Part Number	Value (Ohms)	Rating (mW)	(^)	Type (@)	Multiplier (#)	FRL (&)	FRL (&)	Manufacturer
M55342^04@3#74&	3,740	100 (char. E, H) or 150 (char. K, M)	E, H, K, M	B, C, W	E	S, T	P, R	DAL,MSI,OHM,SOA
M55342^04@3#83&	3,830	100 (char. E, H) or 150 (char. K, M)	E, H, K, M	B, C, W	E	S, T	P, R	DAL,MSI,OHM,SOA
M55342^04@3#90&	3,900	100 (char. E, H) or 150 (char. K, M)	E, H, K, M	B, C, W	H, K, N	S, T	P, R	DAL,MSI,OHM,SOA
M55342^04@3#92&	3,920	100 (char. E, H) or 150 (char. K, M)	E, H, K, M	B, C, W	E	S, T	P, R	DAL,MSI,OHM,SOA
M55342^04@4#02&	4,020	100 (char. E, H) or 150 (char. K, M)	E, H, K, M	B, C, W	E	S, T	P, R	DAL,MSI,OHM,SOA
M55342^04@4#12&	4,120	100 (char. E, H) or 150 (char. K, M)	E, H, K, M	B, C, W	E	S, T	P, R	DAL,MSI,OHM,SOA
M55342^04@4#22&	4,220	100 (char. E, H) or 150 (char. K, M)	E, H, K, M	B, C, W	E	S, T	P, R	DAL,MSI,OHM,SOA
M55342^04@4#30&	4,300	100 (char. E, H) or 150 (char. K, M)	E, H, K, M	B, C, W	H, K	S, T	P, R	DAL,MSI,OHM,SOA
M55342^04@4#32&	4,320	100 (char. E, H) or 150 (char. K, M)	E, H, K, M	B, C, W	E	S, T	P, R	DAL,MSI,OHM,SOA
	Resistance	Power	Char.	Term.	Resistance Tol./	Level 1	Level 2	
Part Number	Value (Ohms)	Rating (mW)	(^)	Type (@)	Multiplier (#)	FRL (&)	FRL (&)	Manufacturer
M55342^04@4#42&	4,420	100 (char. E, H) or 150 (char. K, M)	E, H, K, M	B, C, W	E	S, T	P, R	DAL,MSI,OHM,SOA
M55342^04@4#53&	4,530	100 (char. E, H) or 150 (char. K, M)	E, H, K, M	B, C, W	E	S, T	P, R	DAL,MSI,OHM,SOA
M55342^04@4#64&	4,640	100 (char. E, H) or 150 (char. K, M)	E, H, K, M	B, C, W	E	S, T	P, R	DAL,MSI,OHM,SOA
M55342^04@4#70&	4,700	100 (char. E, H) or 150 (char. K, M)	E, H, K, M	B, C, W	H, K, N	S, T	P, R	DAL,MSI,OHM,SOA
M55342^04@4#75&	4,750	100 (char. E, H) or 150 (char. K, M)	E, H, K, M	B, C, W	E	S, T	P, R	DAL,MSI,OHM,SOA
M55342^04@4#87&	4,870	100 (char. E, H) or 150 (char. K, M)	E, H, K, M	B, C, W	E	S, T	P, R	DAL,MSI,OHM,SOA
M55342^04@4#99&	4,990	100 (char. E, H) or 150 (char. K, M)	E, H, K, M	B, C, W	E	S, T	P, R	DAL,MSI,OHM,SOA
M55342^04@5#10&	5,100	100 (char. E, H) or 150 (char. K, M)	E, H, K, M	B, C, W	H, K	S, T	P, R	DAL,MSI,OHM,SOA
M55342^04@5#11&	5,110	100 (char. E, H) or 150 (char. K, M)	E, H, K, M	B, C, W	E	S, T	P, R	DAL,MSI,OHM,SOA
	Resistance	Power	Char.	Term.	Resistance Tol./	Level 1	Level 2	
Part Number	Value (Ohms)	Rating (mW)	(^)	Type (@)	Multiplier (#)	FRL (&)	FRL (&)	Manufacturer
M55342^04@5#23&	5,230	100 (char. E, H) or 150 (char. K, M)	E, H, K, M	B, C, W	E	S, T	P, R	DAL,MSI,OHM,SOA
M55342^04@5#36&	5,360	100 (char. E, H) or 150 (char. K, M)	E, H, K, M	B, C, W	E	S, T	P, R	DAL,MSI,OHM,SOA
M55342^04@5#49&	5,490	100 (char. E, H) or 150 (char. K, M)	E, H, K, M	B, C, W	E	S, T	P, R	DAL,MSI,OHM,SOA
M55342^04@5#60&	5,600	100 (char. E, H) or 150 (char. K, M)	E, H, K, M	B, C, W	H, K, N	S, T	P, R	DAL,MSI,OHM,SOA
M55342^04@5#62&	5,620	100 (char. E, H) or 150 (char. K, M)	E, H, K, M	B, C, W	E	S, T	P, R	DAL,MSI,OHM,SOA
M55342^04@5#76&	5,760	100 (char. E, H) or 150 (char. K, M)	E, H, K, M	B, C, W	E	S, T	P, R	DAL,MSI,OHM,SOA

M55342^04@5#90&	5,900	100 (char. E, H) or 150 (char. K, M)	E, H, K, M	B, C, W	E	S, T	P, R	DAL,MSI,OHM,SOA
M55342^04@6#04&	6,040	100 (char. E, H) or 150 (char. K, M)	E, H, K, M	B, C, W	E	S, T	P, R	DAL,MSI,OHM,SOA
M55342^04@6#19&	6,190	100 (char. E, H) or 150 (char. K, M)	E, H, K, M	B, C, W	E	S, T	P, R	DAL,MSI,OHM,SOA
	Resistance	Power	Char.	Term.	Resistance Tol./	Level 1	Level 2	
Part Number	Value (Ohms)	Rating (mW)	(^)	Type (@)	Multiplier (#)	FRL (&)	FRL (&)	Manufacturer
M55342^04@6#20&	6,200	100 (char. E, H) or 150 (char. K, M)	E, H, K, M	B, C, W	H, K	S, T	P, R	DAL,MSI,OHM,SOA
M55342^04@6#34&	6,340	100 (char. E, H) or 150 (char. K, M)	E, H, K, M	B, C, W	E	S, T	P, R	DAL,MSI,OHM,SOA
M55342^04@6#49&	6,490	100 (char. E, H) or 150 (char. K, M)	E, H, K, M	B, C, W	E	S, T	P, R	DAL,MSI,OHM,SOA
M55342^04@6#65&	6,650	100 (char. E, H) or 150 (char. K, M)	E, H, K, M	B, C, W	E	S, T	P, R	DAL,MSI,OHM,SOA
M55342^04@6#80&	6,800	100 (char. E, H) or 150 (char. K, M)	E, H, K, M	B, C, W	H, K, N	S, T	P, R	DAL,MSI,OHM,SOA
M55342^04@6#81&	6,810	100 (char. E, H) or 150 (char. K, M)	E, H, K, M	B, C, W	E	S, T	P, R	DAL,MSI,OHM,SOA
M55342^04@6#98&	6,980	100 (char. E, H) or 150 (char. K, M)	E, H, K, M	B, C, W	E	S, T	P, R	DAL,MSI,OHM,SOA
M55342^04@7#15&	7,150	100 (char. E, H) or 150 (char. K, M)	E, H, K, M	B, C, W	E	S, T	P, R	DAL,MSI,OHM,SOA
M55342^04@7#32&	7,320	100 (char. E, H) or 150 (char. K, M)	E, H, K, M	B, C, W	E	S, T	P, R	DAL,MSI,OHM,SOA
	Resistance	Power	Char.	Term.	Resistance Tol./	Level 1	Level 2	
Part Number	Value (Ohms)	Rating (mW)	(^)	Type (@)	Multiplier (#)	FRL (&)	FRL (&)	Manufacturer
M55342^04@7#50&	7,500	100 (char. E, H) or 150 (char. K, M)	E, H, K, M	B, C, W	E, H, K	S, T	P, R	DAL,MSI,OHM,SOA
M55342^04@7#68&	7,680	100 (char. E, H) or 150 (char. K, M)	E, H, K, M	B, C, W	E	S, T	P, R	DAL,MSI,OHM,SOA
M55342^04@7#87&	7,870	100 (char. E, H) or 150 (char. K, M)	E, H, K, M	B, C, W	E	S, T	P, R	DAL,MSI,OHM,SOA
M55342^04@8#06&	8,060	100 (char. E, H) or 150 (char. K, M)	E, H, K, M	B, C, W	E	S, T	P, R	DAL,MSI,OHM,SOA
M55342^04@8#20&	8,200	100 (char. E, H) or 150 (char. K, M)	E, H, K, M	B, C, W	H, K, N	S, T	P, R	DAL,MSI,OHM,SOA
M55342^04@8#25&	8,250	100 (char. E, H) or 150 (char. K, M)	E, H, K, M	B, C, W	E	S, T	P, R	DAL,MSI,OHM,SOA
M55342^04@8#45&	8,450	100 (char. E, H) or 150 (char. K, M)	E, H, K, M	B, C, W	E	S, T	P, R	DAL,MSI,OHM,SOA
M55342^04@8#66&	8,660	100 (char. E, H) or 150 (char. K, M)	E, H, K, M	B, C, W	E	S, T	P, R	DAL,MSI,OHM,SOA
M55342^04@8#87&	8,870	100 (char. E, H) or 150 (char. K, M)	E, H, K, M	B, C, W	E	S, T	P, R	DAL,MSI,OHM,SOA
	Resistance	Power	Char.	Term.	Resistance Tol./	Level 1	Level 2	
Part Number	Value (Ohms)	Rating (mW)	(^)	Type (@)	Multiplier (#)	FRL (&)	FRL (&)	Manufacturer
M55342^04@9#09&	9,090	100 (char. E, H) or 150 (char. K, M)	E, H, K, M	B, C, W	E	S, T	P, R	DAL,MSI,OHM,SOA
M55342^04@9#10&	9,100	100 (char. E, H) or 150 (char. K, M)	E, H, K, M	B, C, W	H, K	S, T	P, R	DAL,MSI,OHM,SOA
M55342^04@9#31&	9,310	100 (char. E, H) or 150 (char. K, M)	E, H, K, M	B, C, W	E	S, T	P, R	DAL,MSI,OHM,SOA
M55342^04@9#53&	9,530	100 (char. E, H) or 150 (char. K, M)	E, H, K, M	B, C, W	E	S, T	P, R	DAL,MSI,OHM,SOA
M55342^04@9#76&	9,760	100 (char. E, H) or 150 (char. K, M)	E, H, K, M	B, C, W	E	S, T	P, R	DAL,MSI,OHM,SOA
	Resistance	Power	Char.	Term.	Resistance Tol./	Level 1	Level 2	
Part Number	Value (Ohms)	Rating (mW)	(^)	Type (@)	Multiplier (#)	FRL (&)	FRL (&)	Manufacturer

MIL-PRF-55342/4 (RM1505) Film Chip Resistors: 10,000 Ohms Through 97,600 Ohms

	Resistance	Power	Char.	Term.	Resistance Tol./	Level 1	Level 2	
Part Number	Value (Ohms)	Rating (mW)	(^)	Type (@)	Multiplier (#)	FRL (&)	FRL (&)	Manufacturer
M55342^04@10#0&	10,000	100 (char. E, H) or 150 (char. K, M)	E, H, K, M	B, C, W	E, H, K, N	S, T	P, R	DAL,MSI,OHM,SOA
M55342^04@10#2&	10,200	100 (char. E, H) or 150 (char. K, M)	E, H, K, M	B, C, W	E	S, T	P, R	DAL,MSI,OHM,SOA
M55342^04@10#5&	10,500	100 (char. E, H) or 150 (char. K, M)	E, H, K, M	B, C, W	E	S, T	P, R	DAL,MSI,OHM,SOA
M55342^04@10#7&	10,700	100 (char. E, H) or 150 (char. K, M)	E, H, K, M	B, C, W	E	S, T	P, R	DAL,MSI,OHM,SOA
M55342^04@11#0&	11,000	100 (char. E, H) or 150 (char. K, M)	E, H, K, M	B, C, W	E, H, K	S, T	P, R	DAL,MSI,OHM,SOA
M55342^04@11#3&	11,300	100 (char. E, H) or 150 (char. K, M)	E, H, K, M	B, C, W	E	S, T	P, R	DAL,MSI,OHM,SOA

M55342^04@11#5&	11,500	100 (char. E, H) or 150 (char. K, M)	E, H, K, M	B, C, W	E	S, T	P, R	DAL,MSI,OHM,SOA
M55342^04@11#8&	11,800	100 (char. E, H) or 150 (char. K, M)	E, H, K, M	B, C, W	E	S, T	P, R	DAL,MSI,OHM,SOA
M55342^04@12#0&	12,000	100 (char. E, H) or 150 (char. K, M)	E, H, K, M	B, C, W	H, K, N	S, T	P, R	DAL,MSI,OHM,SOA
M55342^04@12#1&	12,100	100 (char. E, H) or 150 (char. K, M)	E, H, K, M	B, C, W	E	S, T	P, R	DAL,MSI,OHM,SOA
	Resistance	Power	Char.	Term.	Resistance Tol./	Level 1	Level 2	
Part Number	Value (Ohms)	Rating (mW)	(^)	Type (@)	Multiplier (#)	FRL (&)	FRL (&)	Manufacturer
M55342^04@12#4&	12,400	100 (char. E, H) or 150 (char. K, M)	E, H, K, M	B, C, W	E	S, T	P, R	DAL,MSI,OHM,SOA
M55342^04@12#7&	12,700	100 (char. E, H) or 150 (char. K, M)	E, H, K, M	B, C, W	E	S, T	P, R	DAL,MSI,OHM,SOA
M55342^04@13#0&	13,000	100 (char. E, H) or 150 (char. K, M)	E, H, K, M	B, C, W	E, H, K	S, T	P, R	DAL,MSI,OHM,SOA
M55342^04@13#3&	13,300	100 (char. E, H) or 150 (char. K, M)	E, H, K, M	B, C, W	E	S, T	P, R	DAL,MSI,OHM,SOA
M55342^04@13#7&	13,700	100 (char. E, H) or 150 (char. K, M)	E, H, K, M	B, C, W	E	S, T	P, R	DAL,MSI,OHM,SOA
M55342^04@14#0&	14,000	100 (char. E, H) or 150 (char. K, M)	E, H, K, M	B, C, W	E	S, T	P, R	DAL,MSI,OHM,SOA
M55342^04@14#3&	14,300	100 (char. E, H) or 150 (char. K, M)	E, H, K, M	B, C, W	E	S, T	P, R	DAL,MSI,OHM,SOA
M55342^04@14#7&	14,700	100 (char. E, H) or 150 (char. K, M)	E, H, K, M	B, C, W	E	S, T	P, R	DAL,MSI,OHM,SOA
M55342^04@15#0&	15,000	100 (char. E, H) or 150 (char. K, M)	E, H, K, M	B, C, W	E, H, K, N	S, T	P, R	DAL,MSI,OHM,SOA
	Resistance	Power	Char.	Term.	Resistance Tol./	Level 1	Level 2	
Part Number	Value (Ohms)	Rating (mW)	(^)	Type (@)	Multiplier (#)	FRL (&)	FRL (&)	Manufacturer
M55342^04@15#4&	15,400	100 (char. E, H) or 150 (char. K, M)	E, H, K, M	B, C, W	E	S, T	P, R	DAL,MSI,OHM,SOA
M55342^04@15#8&	15,800	100 (char. E, H) or 150 (char. K, M)	E, H, K, M	B, C, W	E	S, T	P, R	DAL,MSI,OHM,SOA
M55342^04@16#0&	16,000	100 (char. E, H) or 150 (char. K, M)	E, H, K, M	B, C, W	H, K	S, T	P, R	DAL,MSI,OHM,SOA
M55342^04@16#2&	16,200	100 (char. E, H) or 150 (char. K, M)	E, H, K, M	B, C, W	E	S, T	P, R	DAL,MSI,OHM,SOA
M55342^04@16#5&	16,500	100 (char. E, H) or 150 (char. K, M)	E, H, K, M	B, C, W	E	S, T	P, R	DAL,MSI,OHM,SOA
M55342^04@16#9&	16,900	100 (char. E, H) or 150 (char. K, M)	E, H, K, M	B, C, W	E	S, T	P, R	DAL,MSI,OHM,SOA
M55342^04@17#4&	17,400	100 (char. E, H) or 150 (char. K, M)	E, H, K, M	B, C, W	E	S, T	P, R	DAL,MSI,OHM,SOA
M55342^04@17#8&	17,800	100 (char. E, H) or 150 (char. K, M)	E, H, K, M	B, C, W	E	S, T	P, R	DAL,MSI,OHM,SOA
M55342^04@18#0&	18,000	100 (char. E, H) or 150 (char. K, M)	E, H, K, M	B, C, W	H, K, N	S, T	P, R	DAL,MSI,OHM,SOA
	Resistance	Power	Char.	Term.	Resistance Tol./	Level 1	Level 2	
Part Number	Value (Ohms)	Rating (mW)	(^)	Type (@)	Multiplier (#)	FRL (&)	FRL (&)	Manufacturer
M55342^04@18#2&	18,200	100 (char. E, H) or 150 (char. K, M)	E, H, K, M	B, C, W	E	S, T	P, R	DAL,MSI,OHM,SOA
M55342^04@18#7&	18,700	100 (char. E, H) or 150 (char. K, M)	E, H, K, M	B, C, W	E	S, T	P, R	DAL,MSI,OHM,SOA
M55342^04@19#1&	19,100	100 (char. E, H) or 150 (char. K, M)	E, H, K, M	B, C, W	E	S, T	P, R	DAL,MSI,OHM,SOA
M55342^04@19#6&	19,600	100 (char. E, H) or 150 (char. K, M)	E, H, K, M	B, C, W	E	S, T	P, R	DAL,MSI,OHM,SOA
M55342^04@20#0&	20,000	100 (char. E, H) or 150 (char. K, M)	E, H, K, M	B, C, W	E, H, K, N	S, T	P, R	DAL,MSI,OHM,SOA
M55342^04@20#5&	20,500	100 (char. E, H) or 150 (char. K, M)	E, H, K, M	B, C, W	E	S, T	P, R	DAL,MSI,OHM,SOA
M55342^04@21#0&	21,000	100 (char. E, H) or 150 (char. K, M)	E, H, K, M	B, C, W	E	S, T	P, R	DAL,MSI,OHM,SOA
M55342^04@21#5&	21,500	100 (char. E, H) or 150 (char. K, M)	E, H, K, M	B, C, W	E	S, T	P, R	DAL,MSI,OHM,SOA
M55342^04@22#0&	22,000	100 (char. E, H) or 150 (char. K, M)	E, H, K, M	B, C, W	H, K, N	S, T	P, R	DAL,MSI,OHM,SOA
	Resistance	Power	Char.	Term.	Resistance Tol./	Level 1	Level 2	
Part Number	Value (Ohms)	Rating (mW)	(^)	Type (@)	Multiplier (#)	FRL (&)	FRL (&)	Manufacturer
M55342^04@22#1&	22,100	100 (char. E, H) or 150 (char. K, M)	E, H, K, M	B, C, W	E	S, T	P, R	DAL,MSI,OHM,SOA
M55342^04@22#6&	22,600	100 (char. E, H) or 150 (char. K, M)	E, H, K, M	B, C, W	E	S, T	P, R	DAL,MSI,OHM,SOA
M55342^04@23#2&	23,200	100 (char. E, H) or 150 (char. K, M)	E, H, K, M	B, C, W	E	S, T	P, R	DAL,MSI,OHM,SOA
M55342^04@23#7&	23,700	100 (char. E, H) or 150 (char. K, M)	E, H, K, M	B, C, W	E	S, T	P, R	DAL,MSI,OHM,SOA
M55342^04@24#0&	24,000	100 (char. E, H) or 150 (char. K, M)	E, H, K, M	B, C, W	H, K	S, T	P, R	DAL,MSI,OHM,SOA
M55342^04@24#3&	24,300	100 (char. E, H) or 150 (char. K, M)	E, H, K, M	B, C, W	E	S, T	P, R	DAL,MSI,OHM,SOA
M55342^04@24#9&	24,900	100 (char. E, H) or 150 (char. K, M)	E, H, K, M	B, C, W	E	S, T	P, R	DAL,MSI,OHM,SOA
M55342^04@25#5&	25,500	100 (char. E, H) or 150 (char. K, M)	E, H, K, M	B, C, W	E	S, T	P, R	DAL,MSI,OHM,SOA

M55342^04@26#1&	26,100	100 (char. E, H) or 150 (char. K, M)	E, H, K, M	B, C, W	E	S, T	P, R	DAL,MSI,OHM,SOA
	Resistance	Power	Char.	Term.	Resistance Tol./	Level 1	Level 2	
Part Number	Value (Ohms)	Rating (mW)	(^)	Type (@)	Multiplier (#)	FRL (&)	FRL (&)	Manufacturer
M55342^04@26#7&	26,700	100 (char. E, H) or 150 (char. K, M)	E, H, K, M	B, C, W	E	S, T	P, R	DAL,MSI,OHM,SOA
M55342^04@27#0&	27,000	100 (char. E, H) or 150 (char. K, M)	E, H, K, M	B, C, W	H, K, N	S, T	P, R	DAL,MSI,OHM,SOA
M55342^04@27#4&	27,400	100 (char. E, H) or 150 (char. K, M)	E, H, K, M	B, C, W	E	S, T	P, R	DAL,MSI,OHM,SOA
M55342^04@28#0&	28,000	100 (char. E, H) or 150 (char. K, M)	E, H, K, M	B, C, W	E	S, T	P, R	DAL,MSI,OHM,SOA
M55342^04@28#7&	28,700	100 (char. E, H) or 150 (char. K, M)	E, H, K, M	B, C, W	E	S, T	P, R	DAL,MSI,OHM,SOA
M55342^04@29#4&	29,400	100 (char. E, H) or 150 (char. K, M)	E, H, K, M	B, C, W	E	S, T	P, R	DAL,MSI,OHM,SOA
M55342^04@30#0&	30,000	100 (char. E, H) or 150 (char. K, M)	E, H, K, M	B, C, W	H, K	S, T	P, R	DAL,MSI,OHM,SOA
M55342^04@30#1&	30,100	100 (char. E, H) or 150 (char. K, M)	E, H, K, M	B, C, W	E	S, T	P, R	DAL,MSI,OHM,SOA
M55342^04@30#9&	30,900	100 (char. E, H) or 150 (char. K, M)	E, H, K, M	B, C, W	E	S, T	P, R	DAL,MSI,OHM,SOA
	Resistance	Power	Char.	Term.	Resistance Tol./	Level 1	Level 2	
Part Number	Value (Ohms)	Rating (mW)	(^)	Type (@)	Multiplier (#)	FRL (&)	FRL (&)	Manufacturer
M55342^04@31#6&	31,600	100 (char. E, H) or 150 (char. K, M)	E, H, K, M	B, C, W	E	S, T	P, R	DAL,MSI,OHM,SOA
M55342^04@32#4&	32,400	100 (char. E, H) or 150 (char. K, M)	E, H, K, M	B, C, W	E	S, T	P, R	DAL,MSI,OHM,SOA
M55342^04@33#0&	33,000	100 (char. E, H) or 150 (char. K, M)	E, H, K, M	B, C, W	H, K, N	S, T	P, R	DAL,MSI,OHM,SOA
M55342^04@33#2&	33,200	100 (char. E, H) or 150 (char. K, M)	E, H, K, M	B, C, W	E	S, T	P, R	DAL,MSI,OHM,SOA
M55342^04@34#0&	34,000	100 (char. E, H) or 150 (char. K, M)	E, H, K, M	B, C, W	E	S, T	P, R	DAL,MSI,OHM,SOA
M55342^04@34#8&	34,800	100 (char. E, H) or 150 (char. K, M)	E, H, K, M	B, C, W	E	S, T	P, R	DAL,MSI,OHM,SOA
M55342^04@35#7&	35,700	100 (char. E, H) or 150 (char. K, M)	E, H, K, M	B, C, W	E	S, T	P, R	DAL,MSI,OHM,SOA
M55342^04@36#0&	36,000	100 (char. E, H) or 150 (char. K, M)	E, H, K, M	B, C, W	H, K	S, T	P, R	DAL,MSI,OHM,SOA
M55342^04@36#5&	36,500	100 (char. E, H) or 150 (char. K, M)	E, H, K, M	B, C, W	E	S, T	P, R	DAL,MSI,OHM,SOA
	Resistance	Power	Char.	Term.	Resistance Tol./	Level 1	Level 2	
Part Number	Value (Ohms)	Rating (mW)	(^)	Type (@)	Multiplier (#)	FRL (&)	FRL (&)	Manufacturer
M55342^04@37#4&	37,400	100 (char. E, H) or 150 (char. K, M)	E, H, K, M	B, C, W	E	S, T	P, R	DAL,MSI,OHM,SOA
M55342^04@38#3&	38,300	100 (char. E, H) or 150 (char. K, M)	E, H, K, M	B, C, W	E	S, T	P, R	DAL,MSI,OHM,SOA
M55342^04@39#0&	39,000	100 (char. E, H) or 150 (char. K, M)	E, H, K, M	B, C, W	H, K, N	S, T	P, R	DAL,MSI,OHM,SOA
M55342^04@39#2&	39,200	100 (char. E, H) or 150 (char. K, M)	E, H, K, M	B, C, W	E	S, T	P, R	DAL,MSI,OHM,SOA
M55342^04@40#2&	40,200	100 (char. E, H) or 150 (char. K, M)	E, H, K, M	B, C, W	E	S, T	P, R	DAL,MSI,OHM,SOA
M55342^04@41#2&	41,200	100 (char. E, H) or 150 (char. K, M)	E, H, K, M	B, C, W	E	S, T	P, R	DAL,MSI,OHM,SOA
M55342^04@42#2&	42,200	100 (char. E, H) or 150 (char. K, M)	E, H, K, M	B, C, W	E	S, T	P, R	DAL,MSI,OHM,SOA
M55342^04@43#0&	43,000	100 (char. E, H) or 150 (char. K, M)	E, H, K, M	B, C, W	H, K	S, T	P, R	DAL,MSI,OHM,SOA
M55342^04@43#2&	43,200	100 (char. E, H) or 150 (char. K, M)	E, H, K, M	B, C, W	E	S, T	P, R	DAL,MSI,OHM,SOA
	Resistance	Power	Char.	Term.	Resistance Tol./	Level 1	Level 2	
Part Number	Value (Ohms)	Rating (mW)	(^)	Type (@)	Multiplier (#)	FRL (&)	FRL (&)	Manufacturer
M55342^04@44#2&	44,200	100 (char. E, H) or 150 (char. K, M)	E, H, K, M	B, C, W	E	S, T	P, R	DAL,MSI,OHM,SOA
M55342^04@45#3&	45,300	100 (char. E, H) or 150 (char. K, M)	E, H, K, M	B, C, W	E	S, T	P, R	DAL,MSI,OHM,SOA
M55342^04@46#4&	46,400	100 (char. E, H) or 150 (char. K, M)	E, H, K, M	B, C, W	E	S, T	P, R	DAL,MSI,OHM,SOA
M55342^04@47#0&	47,000	100 (char. E, H) or 150 (char. K, M)	E, H, K, M	B, C, W	H, K, N	S, T	P, R	DAL,MSI,OHM,SOA
M55342^04@47#5&	47,500	100 (char. E, H) or 150 (char. K, M)	E, H, K, M	B, C, W	E	S, T	P, R	DAL,MSI,OHM,SOA
M55342^04@48#7&	48,700	100 (char. E, H) or 150 (char. K, M)	E, H, K, M	B, C, W	E	S, T	P, R	DAL,MSI,OHM,SOA
M55342^04@49#9&	49,900	100 (char. E, H) or 150 (char. K, M)	E, H, K, M	B, C, W	E	S, T	P, R	DAL,MSI,OHM,SOA
M55342^04@51#0&	51,000	100 (char. E, H) or 150 (char. K, M)	E, H, K, M	B, C, W	H, K	S, T	P, R	DAL,MSI,OHM,SOA
M55342^04@51#1&	51,100	100 (char. E, H) or 150 (char. K, M)	E, H, K, M	B, C, W	E	S, T	P, R	DAL,MSI,OHM,SOA
	Resistance	Power	Char.	Term.	Resistance Tol./	Level 1	Level 2	
Part Number	Value (Ohms)	Rating (mW)	(^)	Type (@)	Multiplier (#)	FRL (&)	FRL (&)	Manufacturer

M55342^04@52#3&	52,300	100 (char. E, H) or 150 (char. K, M)	E, H, K, M	B, C, W	E	S, T	P, R	DAL,MSI,OHM,SOA
M55342^04@53#6&	53,600	100 (char. E, H) or 150 (char. K, M)	E, H, K, M	B, C, W	E	S, T	P, R	DAL,MSI,OHM,SOA
M55342^04@54#9&	54,900	100 (char. E, H) or 150 (char. K, M)	E, H, K, M	B, C, W	E	S, T	P, R	DAL,MSI,OHM,SOA
M55342^04@56#0&	56,000	100 (char. E, H) or 150 (char. K, M)	E, H, K, M	B, C, W	H, K, N	S, T	P, R	DAL,MSI,OHM,SOA
M55342^04@56#2&	56,200	100 (char. E, H) or 150 (char. K, M)	E, H, K, M	B, C, W	E	S, T	P, R	DAL,MSI,OHM,SOA
M55342^04@57#6&	57,600	100 (char. E, H) or 150 (char. K, M)	E, H, K, M	B, C, W	E	S, T	P, R	DAL,MSI,OHM,SOA
M55342^04@59#0&	59,000	100 (char. E, H) or 150 (char. K, M)	E, H, K, M	B, C, W	E	S, T	P, R	DAL,MSI,OHM,SOA
M55342^04@60#4&	60,400	100 (char. E, H) or 150 (char. K, M)	E, H, K, M	B, C, W	E	S, T	P, R	DAL,MSI,OHM,SOA
M55342^04@61#9&	61,900	100 (char. E, H) or 150 (char. K, M)	E, H, K, M	B, C, W	E	S, T	P, R	DAL,MSI,OHM,SOA
	Resistance	Power	Char.	Term.	Resistance Tol./	Level 1	Level 2	
Part Number	Value (Ohms)	Rating (mW)	(^)	Type (@)	Multiplier (#)	FRL (&)	FRL (&)	Manufacturer
M55342^04@62#0&	62,000	100 (char. E, H) or 150 (char. K, M)	E, H, K, M	B, C, W	H, K	S, T	P, R	DAL,MSI,OHM,SOA
M55342^04@63#4&	63,400	100 (char. E, H) or 150 (char. K, M)	E, H, K, M	B, C, W	E	S, T	P, R	DAL,MSI,OHM,SOA
M55342^04@64#9&	64,900	100 (char. E, H) or 150 (char. K, M)	E, H, K, M	B, C, W	E	S, T	P, R	DAL,MSI,OHM,SOA
M55342^04@66#5&	66,500	100 (char. E, H) or 150 (char. K, M)	E, H, K, M	B, C, W	E	S, T	P, R	DAL,MSI,OHM,SOA
M55342^04@68#0&	68,000	100 (char. E, H) or 150 (char. K, M)	E, H, K, M	B, C, W	H, K, N	S, T	P, R	DAL,MSI,OHM,SOA
M55342^04@68#1&	68,100	100 (char. E, H) or 150 (char. K, M)	E, H, K, M	B, C, W	E	S, T	P, R	DAL,MSI,OHM,SOA
M55342^04@69#8&	69,800	100 (char. E, H) or 150 (char. K, M)	E, H, K, M	B, C, W	E	S, T	P, R	DAL,MSI,OHM,SOA
M55342^04@71#5&	71,500	100 (char. E, H) or 150 (char. K, M)	E, H, K, M	B, C, W	E	S, T	P, R	DAL,MSI,OHM,SOA
M55342^04@73#2&	73,200	100 (char. E, H) or 150 (char. K, M)	E, H, K, M	B, C, W	E	S, T	P, R	DAL,MSI,OHM,SOA
	Resistance	Power	Char.	Term.	Resistance Tol./	Level 1	Level 2	
Part Number	Value (Ohms)	Rating (mW)	(^)	Type (@)	Multiplier (#)	FRL (&)	FRL (&)	Manufacturer
M55342^04@75#0&	75,000	100 (char. E, H) or 150 (char. K, M)	E, H, K, M	B, C, W	E, H, K	S, T	P, R	DAL,MSI,OHM,SOA
M55342^04@76#8&	76,800	100 (char. E, H) or 150 (char. K, M)	E, H, K, M	B, C, W	E	S, T	P, R	DAL,MSI,OHM,SOA
M55342^04@78#7&	78,700	100 (char. E, H) or 150 (char. K, M)	E, H, K, M	B, C, W	E	S, T	P, R	DAL,MSI,OHM,SOA
M55342^04@80#6&	80,600	100 (char. E, H) or 150 (char. K, M)	E, H, K, M	B, C, W	E	S, T	P, R	DAL,MSI,OHM,SOA
M55342^04@82#0&	82,000	100 (char. E, H) or 150 (char. K, M)	E, H, K, M	B, C, W	H, K, N	S, T	P, R	DAL,MSI,OHM,SOA
M55342^04@82#5&	82,500	100 (char. E, H) or 150 (char. K, M)	E, H, K, M	B, C, W	E	S, T	P, R	DAL,MSI,OHM,SOA
M55342^04@84#5&	84,500	100 (char. E, H) or 150 (char. K, M)	E, H, K, M	B, C, W	E	S, T	P, R	DAL,MSI,OHM,SOA
M55342^04@86#6&	86,600	100 (char. E, H) or 150 (char. K, M)	E, H, K, M	B, C, W	E	S, T	P, R	DAL,MSI,OHM,SOA
M55342^04@88#7&	88,700	100 (char. E, H) or 150 (char. K, M)	E, H, K, M	B, C, W	E	S, T	P, R	DAL,MSI,OHM,SOA
	Resistance	Power	Char.	Term.	Resistance Tol./	Level 1	Level 2	
Part Number	Value (Ohms)	Rating (mW)	(^)	Type (@)	Multiplier (#)	FRL (&)	FRL (&)	Manufacturer
M55342^04@90#9&	90,900	100 (char. E, H) or 150 (char. K, M)	E, H, K, M	B, C, W	E	S, T	P, R	DAL,MSI,OHM,SOA
M55342^04@91#0&	91,000	100 (char. E, H) or 150 (char. K, M)	E, H, K, M	B, C, W	H, K	S, T	P, R	DAL,MSI,OHM,SOA
M55342^04@93#1&	93,100	100 (char. E, H) or 150 (char. K, M)	E, H, K, M	B, C, W	E	S, T	P, R	DAL,MSI,OHM,SOA
M55342^04@95#3&	95,300	100 (char. E, H) or 150 (char. K, M)	E, H, K, M	B, C, W	E	S, T	P, R	DAL,MSI,OHM,SOA
M55342^04@97#6&	97,600	100 (char. E, H) or 150 (char. K, M)	E, H, K, M	B, C, W	E	S, T	P, R	DAL,MSI,OHM,SOA
	Resistance	Power	Char.	Term.	Resistance Tol./	Level 1	Level 2	
Part Number	Value (Ohms)	Rating (mW)	(^)	Type (@)	Multiplier (#)	FRL (&)	FRL (&)	Manufacturer

MIL-PRF-55342/4 (RM1505) Film Chip Resistors: 100,000 Ohms Through 976,000 Ohms

	Resistance	Power	Char.	Term.	Resistance Tol./	Level 1	Level 2	
Part Number	Value (Ohms)	Rating (mW)	(^)	Type (@)	Multiplier (#)	FRL (&)	FRL (&)	Manufacturer

M55342^04@100#&	100,000	100 (char. E, H) or 150 (char. K, M)	E, H, K, M	B, C, W	E, H, K, N	S, T	P, R	DAL,MSI,OHM,SOA
M55342^04@102#&	102,000	100 (char. E, H) or 150 (char. K, M)	E, H, K, M	B, C, W	E	S, T	P, R	DAL,MSI,OHM,SOA
M55342^04@105#&	105,000	100 (char. E, H) or 150 (char. K, M)	E, H, K, M	B, C, W	E	S, T	P, R	DAL,MSI,OHM,SOA
M55342^04@107#&	107,000	100 (char. E, H) or 150 (char. K, M)	E, H, K, M	B, C, W	E	S, T	P, R	DAL,MSI,OHM,SOA
M55342^04@110#&	110,000	100 (char. E, H) or 150 (char. K, M)	E, H, K, M	B, C, W	E, H, K	S, T	P, R	DAL,MSI,OHM,SOA
M55342^04@113#&	113,000	100 (char. E, H) or 150 (char. K, M)	E, H, K, M	B, C, W	E	S, T	P, R	DAL,MSI,OHM,SOA
M55342^04@115#&	115,000	100 (char. E, H) or 150 (char. K, M)	E, H, K, M	B, C, W	E	S, T	P, R	DAL,MSI,OHM,SOA
M55342^04@118#&	118,000	100 (char. E, H) or 150 (char. K, M)	E, H, K, M	B, C, W	E	S, T	P, R	DAL,MSI,OHM,SOA
M55342^04@120#&	120,000	100 (char. E, H) or 150 (char. K, M)	E, H, K, M	B, C, W	H, K, N	S, T	P, R	DAL,MSI,OHM,SOA
M55342^04@121#&	121,000	100 (char. E, H) or 150 (char. K, M)	E, H, K, M	B, C, W	E	S, T	P, R	DAL,MSI,OHM,SOA
	Resistance	Power	Char.	Term.	Resistance Tol./	Level 1	Level 2	
Part Number	Value (Ohms)	Rating (mW)	(^)	Type (@)	Multiplier (#)	FRL (&)	FRL (&)	Manufacturer
M55342^04@124#&	124,000	100 (char. E, H) or 150 (char. K, M)	E, H, K, M	B, C, W	E	S, T	P, R	DAL,MSI,OHM,SOA
M55342^04@127#&	127,000	100 (char. E, H) or 150 (char. K, M)	E, H, K, M	B, C, W	E	S, T	P, R	DAL,MSI,OHM,SOA
M55342^04@130#&	130,000	100 (char. E, H) or 150 (char. K, M)	E, H, K, M	B, C, W	E, H, K	S, T	P, R	DAL,MSI,OHM,SOA
M55342^04@133#&	133,000	100 (char. E, H) or 150 (char. K, M)	E, H, K, M	B, C, W	E	S, T	P, R	DAL,MSI,OHM,SOA
M55342^04@137#&	137,000	100 (char. E, H) or 150 (char. K, M)	E, H, K, M	B, C, W	E	S, T	P, R	DAL,MSI,OHM,SOA
M55342^04@140#&	140,000	100 (char. E, H) or 150 (char. K, M)	E, H, K, M	B, C, W	E	S, T	P, R	DAL,MSI,OHM,SOA
M55342^04@143#&	143,000	100 (char. E, H) or 150 (char. K, M)	E, H, K, M	B, C, W	E	S, T	P, R	DAL,MSI,OHM,SOA
M55342^04@147#&	147,000	100 (char. E, H) or 150 (char. K, M)	E, H, K, M	B, C, W	E	S, T	P, R	DAL,MSI,OHM,SOA
M55342^04@150#&	150,000	100 (char. E, H) or 150 (char. K, M)	E, H, K, M	B, C, W	E, H, K, N	S, T	P, R	DAL,MSI,OHM,SOA
	Resistance	Power	Char.	Term.	Resistance Tol./	Level 1	Level 2	
Part Number	Value (Ohms)	Rating (mW)	(^)	Type (@)	Multiplier (#)	FRL (&)	FRL (&)	Manufacturer
M55342^04@154#&	154,000	100 (char. E, H) or 150 (char. K, M)	E, H, K, M	B, C, W	E	S, T	P, R	DAL,MSI,OHM,SOA
M55342^04@158#&	158,000	100 (char. E, H) or 150 (char. K, M)	E, H, K, M	B, C, W	E	S, T	P, R	DAL,MSI,OHM,SOA
M55342^04@160#&	160,000	100 (char. E, H) or 150 (char. K, M)	E, H, K, M	B, C, W	H, K	S, T	P, R	DAL,MSI,OHM,SOA
M55342^04@162#&	162,000	100 (char. E, H) or 150 (char. K, M)	E, H, K, M	B, C, W	E	S, T	P, R	DAL,MSI,OHM,SOA
M55342^04@165#&	165,000	100 (char. E, H) or 150 (char. K, M)	E, H, K, M	B, C, W	E	S, T	P, R	DAL,MSI,OHM,SOA
M55342^04@169#&	169,000	100 (char. E, H) or 150 (char. K, M)	E, H, K, M	B, C, W	E	S, T	P, R	DAL,MSI,OHM,SOA
M55342^04@174#&	174,000	100 (char. E, H) or 150 (char. K, M)	E, H, K, M	B, C, W	E	S, T	P, R	DAL,MSI,OHM,SOA
M55342^04@178#&	178,000	100 (char. E, H) or 150 (char. K, M)	E, H, K, M	B, C, W	E	S, T	P, R	DAL,MSI,OHM,SOA
M55342^04@180#&	180,000	100 (char. E, H) or 150 (char. K, M)	E, H, K, M	B, C, W	H, K, N	S, T	P, R	DAL,MSI,OHM,SOA
	Resistance	Power	Char.	Term.	Resistance Tol./	Level 1	Level 2	
Part Number	Value (Ohms)	Rating (mW)	(^)	Type (@)	Multiplier (#)	FRL (&)	FRL (&)	Manufacturer
M55342^04@182#&	182,000	100 (char. E, H) or 150 (char. K, M)	E, H, K, M	B, C, W	E	S, T	P, R	DAL,MSI,OHM,SOA
M55342^04@187#&	187,000	100 (char. E, H) or 150 (char. K, M)	E, H, K, M	B, C, W	E	S, T	P, R	DAL,MSI,OHM,SOA
M55342^04@191#&	191,000	100 (char. E, H) or 150 (char. K, M)	E, H, K, M	B, C, W	E	S, T	P, R	DAL,MSI,OHM,SOA
M55342^04@196#&	196,000	100 (char. E, H) or 150 (char. K, M)	E, H, K, M	B, C, W	E	S, T	P, R	DAL,MSI,OHM,SOA
M55342^04@200#&	200,000	100 (char. E, H) or 150 (char. K, M)	E, H, K, M	B, C, W	E, H, K, N	S, T	P, R	DAL,MSI,OHM,SOA
M55342^04@205#&	205,000	100 (char. E, H) or 150 (char. K, M)	E, H, K, M	B, C, W	E	S, T	P, R	DAL,MSI,OHM,SOA
M55342^04@210#&	210,000	100 (char. E, H) or 150 (char. K, M)	E, H, K, M	B, C, W	E	S, T	P, R	DAL,MSI,OHM,SOA
M55342^04@215#&	215,000	100 (char. E, H) or 150 (char. K, M)	E, H, K, M	B, C, W	E	S, T	P, R	DAL,MSI,OHM,SOA
M55342^04@220#&	220,000	100 (char. E, H) or 150 (char. K, M)	E, H, K, M	B, C, W	H, K, N	S, T	P, R	DAL,MSI,OHM,SOA
	Resistance	Power	Char.	Term.	Resistance Tol./	Level 1	Level 2	
Part Number	Value (Ohms)	Rating (mW)	(^)	Type (@)	Multiplier (#)	FRL (&)	FRL (&)	Manufacturer
M55342^04@221#&	221,000	100 (char. E, H) or 150 (char. K, M)	E, H, K, M	B, C, W	E	S, T	P, R	DAL,MSI,OHM,SOA
M55342^04@226#&	226,000	100 (char. E, H) or 150 (char. K, M)	E, H, K, M	B, C, W	E	S, T	P, R	DAL,MSI,OHM,SOA

M55342^04@232#&	232,000	100 (char. E, H) or 150 (char. K, M)	E, H, K, M	B, C, W	E	S, T	P, R	DAL,MSI,OHM,SOA
M55342^04@237#&	237,000	100 (char. E, H) or 150 (char. K, M)	E, H, K, M	B, C, W	E	S, T	P, R	DAL,MSI,OHM,SOA
M55342^04@240#&	240,000	100 (char. E, H) or 150 (char. K, M)	E, H, K, M	B, C, W	H, K	S, T	P, R	DAL,MSI,OHM,SOA
M55342^04@243#&	243,000	100 (char. E, H) or 150 (char. K, M)	E, H, K, M	B, C, W	E	S, T	P, R	DAL,MSI,OHM,SOA
M55342^04@249#&	249,000	100 (char. E, H) or 150 (char. K, M)	E, H, K, M	B, C, W	E	S, T	P, R	DAL,MSI,OHM,SOA
M55342^04@255#&	255,000	100 (char. E, H) or 150 (char. K, M)	E, H, K, M	B, C, W	E	S, T	P, R	DAL,MSI,OHM,SOA
M55342^04@261#&	261,000	100 (char. E, H) or 150 (char. K, M)	E, H, K, M	B, C, W	E	S, T	P, R	DAL,MSI,OHM,SOA
	Resistance	Power	Char.	Term.	Resistance Tol./	Level 1	Level 2	
Part Number	Value (Ohms)	Rating (mW)	(^)	Type (@)	Multiplier (#)	FRL (&)	FRL (&)	Manufacturer
M55342^04@267#&	267,000	100 (char. E, H) or 150 (char. K, M)	E, H, K, M	B, C, W	E	S, T	P, R	DAL,MSI,OHM,SOA
M55342^04@270#&	270,000	100 (char. E, H) or 150 (char. K, M)	E, H, K, M	B, C, W	H, K, N	S, T	P, R	DAL,MSI,OHM,SOA
M55342^04@274#&	274,000	100 (char. E, H) or 150 (char. K, M)	E, H, K, M	B, C, W	E	S, T	P, R	DAL,MSI,OHM,SOA
M55342^04@280#&	280,000	100 (char. E, H) or 150 (char. K, M)	E, H, K, M	B, C, W	E	S, T	P, R	DAL,MSI,OHM,SOA
M55342^04@287#&	287,000	100 (char. E, H) or 150 (char. K, M)	E, H, K, M	B, C, W	E	S, T	P, R	DAL,MSI,OHM,SOA
M55342^04@294#&	294,000	100 (char. E, H) or 150 (char. K, M)	E, H, K, M	B, C, W	E	S, T	P, R	DAL,MSI,OHM,SOA
M55342^04@300#&	300,000	100 (char. E, H) or 150 (char. K, M)	E, H, K, M	B, C, W	H, K	S, T	P, R	DAL,MSI,OHM,SOA
M55342^04@301#&	301,000	100 (char. E, H) or 150 (char. K, M)	E, H, K, M	B, C, W	E	S, T	P, R	DAL,MSI,OHM,SOA
M55342^04@309#&	309,000	100 (char. E, H) or 150 (char. K, M)	E, H, K, M	B, C, W	E	S, T	P, R	DAL,MSI,OHM,SOA
	Resistance	Power	Char.	Term.	Resistance Tol./	Level 1	Level 2	
Part Number	Value (Ohms)	Rating (mW)	(^)	Type (@)	Multiplier (#)	FRL (&)	FRL (&)	Manufacturer
M55342^04@316#&	316,000	100 (char. E, H) or 150 (char. K, M)	E, H, K, M	B, C, W	E	S, T	P, R	DAL,MSI,OHM,SOA
M55342^04@324#&	324,000	100 (char. E, H) or 150 (char. K, M)	E, H, K, M	B, C, W	E	S, T	P, R	DAL,MSI,OHM,SOA
M55342^04@330#&	330,000	100 (char. E, H) or 150 (char. K, M)	E, H, K, M	B, C, W	H, K, N	S, T	P, R	DAL,MSI,OHM,SOA
M55342^04@332#&	332,000	100 (char. E, H) or 150 (char. K, M)	E, H, K, M	B, C, W	E	S, T	P, R	DAL,MSI,OHM,SOA
M55342^04@340#&	340,000	100 (char. E, H) or 150 (char. K, M)	E, H, K, M	B, C, W	E	S, T	P, R	DAL,MSI,OHM,SOA
M55342^04@348#&	348,000	100 (char. E, H) or 150 (char. K, M)	E, H, K, M	B, C, W	E	S, T	P, R	DAL,MSI,OHM,SOA
M55342^04@357#&	357,000	100 (char. E, H) or 150 (char. K, M)	E, H, K, M	B, C, W	E	S, T	P, R	DAL,MSI,OHM,SOA
M55342^04@360#&	360,000	100 (char. E, H) or 150 (char. K, M)	E, H, K, M	B, C, W	H, K	S, T	P, R	DAL,MSI,OHM,SOA
M55342^04@365#&	365,000	100 (char. E, H) or 150 (char. K, M)	E, H, K, M	B, C, W	E	S, T	P, R	DAL,MSI,OHM,SOA
	Resistance	Power	Char.	Term.	Resistance Tol./	Level 1	Level 2	
Part Number	Value (Ohms)	Rating (mW)	(^)	Type (@)	Multiplier (#)	FRL (&)	FRL (&)	Manufacturer
M55342^04@374#&	374,000	100 (char. E, H) or 150 (char. K, M)	E, H, K, M	B, C, W	E	S, T	P, R	DAL,MSI,OHM,SOA
M55342^04@383#&	383,000	100 (char. E, H) or 150 (char. K, M)	E, H, K, M	B, C, W	E	S, T	P, R	DAL,MSI,OHM,SOA
M55342^04@390#&	390,000	100 (char. E, H) or 150 (char. K, M)	E, H, K, M	B, C, W	H, K, N	S, T	P, R	DAL,MSI,OHM,SOA
M55342^04@392#&	392,000	100 (char. E, H) or 150 (char. K, M)	E, H, K, M	B, C, W	E	S, T	P, R	DAL,MSI,OHM,SOA
M55342^04@402#&	402,000	100 (char. E, H) or 150 (char. K, M)	E, H, K, M	B, C, W	E	S, T	P, R	DAL,MSI,OHM,SOA
M55342^04@412#&	412,000	100 (char. E, H) or 150 (char. K, M)	E, H, K, M	B, C, W	E	S, T	P, R	DAL,MSI,OHM,SOA
M55342^04@422#&	422,000	100 (char. E, H) or 150 (char. K, M)	E, H, K, M	B, C, W	E	S, T	P, R	DAL,MSI,OHM,SOA
M55342^04@430#&	430,000	100 (char. E, H) or 150 (char. K, M)	E, H, K, M	B, C, W	H, K	S, T	P, R	DAL,MSI,OHM,SOA
M55342^04@432#&	432,000	100 (char. E, H) or 150 (char. K, M)	E, H, K, M	B, C, W	E	S, T	P, R	DAL,MSI,OHM,SOA
	Resistance	Power	Char.	Term.	Resistance Tol./	Level 1	Level 2	
Part Number	Value (Ohms)	Rating (mW)	(^)	Type (@)	Multiplier (#)	FRL (&)	FRL (&)	Manufacturer
M55342^04@442#&	442,000	100 (char. E, H) or 150 (char. K, M)	E, H, K, M	B, C, W	E	S, T	P, R	DAL,MSI,OHM,SOA
M55342^04@453#&	453,000	100 (char. E, H) or 150 (char. K, M)	E, H, K, M	B, C, W	E	S, T	P, R	DAL,MSI,OHM,SOA
M55342^04@464#&	464,000	100 (char. E, H) or 150 (char. K, M)	E, H, K, M	B, C, W	E	S, T	P, R	DAL,MSI,OHM,SOA
M55342^04@470#&	470,000	100 (char. E, H) or 150 (char. K, M)	E, H, K, M	B, C, W	H, K, N	S, T	P, R	DAL,MSI,OHM,SOA
M55342^04@475#&	475,000	100 (char. E, H) or 150 (char. K, M)	E, H, K, M	B, C, W	E	S, T	P, R	DAL,MSI,OHM,SOA

M55342^04@487#&	487,000	100 (char. E, H) or 150 (char. K, M)	E, H, K, M	B, C, W	E	S, T	P, R	DAL,MSI,OHM,SOA
M55342^04@499#&	499,000	100 (char. E, H) or 150 (char. K, M)	E, H, K, M	B, C, W	E	S, T	P, R	DAL,MSI,OHM,SOA
M55342^04@510#&	510,000	100 (char. E, H) or 150 (char. K, M)	E, H, K, M	B, C, W	H, K	S, T	P, R	DAL,MSI,OHM,SOA
M55342^04@511#&	511,000	100 (char. E, H) or 150 (char. K, M)	E, H, K, M	B, C, W	E	S, T	P, R	DAL,MSI,OHM,SOA
	Resistance	Power	Char.	Term.	Resistance Tol./	Level 1	Level 2	
Part Number	Value (Ohms)	Rating (mW)	(^)	Type (@)	Multiplier (#)	FRL (&)	FRL (&)	Manufacturer
M55342^04@523#&	523,000	100 (char. E, H) or 150 (char. K, M)	E, H, K, M	B, C, W	E	S, T	P, R	DAL,MSI,OHM,SOA
M55342^04@536#&	536,000	100 (char. E, H) or 150 (char. K, M)	E, H, K, M	B, C, W	E	S, T	P, R	DAL,MSI,OHM,SOA
M55342^04@549#&	549,000	100 (char. E, H) or 150 (char. K, M)	E, H, K, M	B, C, W	E	S, T	P, R	DAL,MSI,OHM,SOA
M55342^04@560#&	560,000	100 (char. E, H) or 150 (char. K, M)	E, H, K, M	B, C, W	H, K, N	S, T	P, R	DAL,MSI,OHM,SOA
M55342^04@562#&	562,000	100 (char. E, H) or 150 (char. K, M)	E, H, K, M	B, C, W	E	S, T	P, R	DAL,MSI,OHM,SOA
M55342^04@576#&	576,000	100 (char. E, H) or 150 (char. K, M)	E, H, K, M	B, C, W	E	S, T	P, R	DAL,MSI,OHM,SOA
M55342^04@590#&	590,000	100 (char. E, H) or 150 (char. K, M)	E, H, K, M	B, C, W	E	S, T	P, R	DAL,MSI,OHM,SOA
M55342^04@604#&	604,000	100 (char. E, H) or 150 (char. K, M)	E, H, K, M	B, C, W	E	S, T	P, R	DAL,MSI,OHM,SOA
M55342^04@619#&	619,000	100 (char. E, H) or 150 (char. K, M)	E, H, K, M	B, C, W	E	S, T	P, R	DAL,MSI,OHM,SOA
	Resistance	Power	Char.	Term.	Resistance Tol./	Level 1	Level 2	
Part Number	Value (Ohms)	Rating (mW)	(^)	Type (@)	Multiplier (#)	FRL (&)	FRL (&)	Manufacturer
M55342^04@620#&	620,000	100 (char. E, H) or 150 (char. K, M)	E, H, K, M	B, C, W	H, K	S, T	P, R	DAL,MSI,OHM,SOA
M55342^04@634#&	634,000	100 (char. E, H) or 150 (char. K, M)	E, H, K, M	B, C, W	E	S, T	P, R	DAL,MSI,OHM,SOA
M55342^04@649#&	649,000	100 (char. E, H) or 150 (char. K, M)	E, H, K, M	B, C, W	E	S, T	P, R	DAL,MSI,OHM,SOA
M55342^04@665#&	665,000	100 (char. E, H) or 150 (char. K, M)	E, H, K, M	B, C, W	E	S, T	P, R	DAL,MSI,OHM,SOA
M55342^04@680#&	680,000	100 (char. E, H) or 150 (char. K, M)	E, H, K, M	B, C, W	H, K, N	S, T	P, R	DAL,MSI,OHM,SOA
M55342^04@681#&	681,000	100 (char. E, H) or 150 (char. K, M)	E, H, K, M	B, C, W	E	S, T	P, R	DAL,MSI,OHM,SOA
M55342^04@698#&	698,000	100 (char. E, H) or 150 (char. K, M)	E, H, K, M	B, C, W	E	S, T	P, R	DAL,MSI,OHM,SOA
M55342^04@715#&	715,000	100 (char. E, H) or 150 (char. K, M)	E, H, K, M	B, C, W	E	S, T	P, R	DAL,MSI,OHM,SOA
M55342^04@732#&	732,000	100 (char. E, H) or 150 (char. K, M)	E, H, K, M	B, C, W	E	S, T	P, R	DAL,MSI,OHM,SOA
	Resistance	Power	Char.	Term.	Resistance Tol./	Level 1	Level 2	
Part Number	Value (Ohms)	Rating (mW)	(^)	Type (@)	Multiplier (#)	FRL (&)	FRL (&)	Manufacturer
M55342^04@750#&	750,000	100 (char. E, H) or 150 (char. K, M)	E, H, K, M	B, C, W	E, H, K	S, T	P, R	DAL,MSI,OHM,SOA
M55342^04@768#&	768,000	100 (char. E, H) or 150 (char. K, M)	E, H, K, M	B, C, W	E	S, T	P, R	DAL,MSI,OHM,SOA
M55342^04@787#&	787,000	100 (char. E, H) or 150 (char. K, M)	E, H, K, M	B, C, W	E	S, T	P, R	DAL,MSI,OHM,SOA
M55342^04@806#&	806,000	100 (char. E, H) or 150 (char. K, M)	E, H, K, M	B, C, W	E	S, T	P, R	DAL,MSI,OHM,SOA
M55342^04@820#&	820,000	100 (char. E, H) or 150 (char. K, M)	E, H, K, M	B, C, W	H, K, N	S, T	P, R	DAL,MSI,OHM,SOA
M55342^04@825#&	825,000	100 (char. E, H) or 150 (char. K, M)	E, H, K, M	B, C, W	E	S, T	P, R	DAL,MSI,OHM,SOA
M55342^04@845#&	845,000	100 (char. E, H) or 150 (char. K, M)	E, H, K, M	B, C, W	E	S, T	P, R	DAL,MSI,OHM,SOA
M55342^04@866#&	866,000	100 (char. E, H) or 150 (char. K, M)	E, H, K, M	B, C, W	E	S, T	P, R	DAL,MSI,OHM,SOA
M55342^04@887#&	887,000	100 (char. E, H) or 150 (char. K, M)	E, H, K, M	B, C, W	E	S, T	P, R	DAL,MSI,OHM,SOA
	Resistance	Power	Char.	Term.	Resistance Tol./	Level 1	Level 2	
Part Number	Value (Ohms)	Rating (mW)	(^)	Type (@)	Multiplier (#)	FRL (&)	FRL (&)	Manufacturer
M55342^04@909#&	909,000	100 (char. E, H) or 150 (char. K, M)	E, H, K, M	B, C, W	E	S, T	P, R	DAL,MSI,OHM,SOA
M55342^04@910#&	910,000	100 (char. E, H) or 150 (char. K, M)	E, H, K, M	B, C, W	H, K	S, T	P, R	DAL,MSI,OHM,SOA
M55342^04@931#&	931,000	100 (char. E, H) or 150 (char. K, M)	E, H, K, M	B, C, W	E	S, T	P, R	DAL,MSI,OHM,SOA
M55342^04@953#&	953,000	100 (char. E, H) or 150 (char. K, M)	E, H, K, M	B, C, W	E	S, T	P, R	DAL,MSI,OHM,SOA
M55342^04@976#&	976,000	100 (char. E, H) or 150 (char. K, M)	E, H, K, M	B, C, W	E	S, T	P, R	DAL,MSI,OHM,SOA
	Resistance	Power	Char.	Term.	Resistance Tol./	Level 1	Level 2	
Part Number	Value (Ohms)	Rating (mW)	(^)	Type (@)	Multiplier (#)	FRL (&)	FRL (&)	Manufacturer

MIL-PRF-55342/4 (RM1505) Film Chip Resistors: 1,000,000 Ohms Through 4,700,000 Ohms

	Resistance	Power	Char.	Term.	Resistance Tol./	Level 1	Level 2	
Part Number	Value (Ohms)	Rating (mW)	(^)	Type (@)	Multiplier (#)	FRL (&)	FRL (&)	Manufacturer
M55342^04@1#00&	1,000,000	100 (char. E, H) or 150 (char. K, M)	E, H, K, M	B, C, W	F, T, L, P	S, T	P, R	DAL,MSI,OHM,SOA
M55342^04@1#02&	1,020,000	100 (char. E, H) or 150 (char. K, M)	E, H, K, M	B, C, W	F	S, T	P, R	DAL,SOA
M55342^04@1#05&	1,050,000	100 (char. E, H) or 150 (char. K, M)	E, H, K, M	B, C, W	F	S, T	P, R	DAL,SOA
M55342^04@1#07&	1,070,000	100 (char. E, H) or 150 (char. K, M)	E, H, K, M	B, C, W	F	S, T	P, R	DAL,SOA
M55342^04@1#10&	1,100,000	100 (char. E, H) or 150 (char. K, M)	E, H, K, M	B, C, W	F, T, L	S, T	P, R	DAL,SOA
M55342^04@1#13&	1,130,000	100 (char. E, H) or 150 (char. K, M)	E, H, K, M	B, C, W	F	S, T	P, R	DAL,SOA
M55342^04@1#15&	1,150,000	100 (char. E, H) or 150 (char. K, M)	E, H, K, M	B, C, W	F	S, T	P, R	DAL,SOA
M55342^04@1#18&	1,180,000	100 (char. E, H) or 150 (char. K, M)	E, H, K, M	B, C, W	F	S, T	P, R	DAL,SOA
M55342^04@1#20&	1,200,000	100 (char. E, H) or 150 (char. K, M)	E, H, K, M	B, C, W	T, L, P	S, T	P, R	DAL,SOA
M55342^04@1#21&	1,210,000	100 (char. E, H) or 150 (char. K, M)	E, H, K, M	B, C, W	F	S, T	P, R	DAL,SOA
	Resistance	Power	Char.	Term.	Resistance Tol./	Level 1	Level 2	
Part Number	Value (Ohms)	Rating (mW)	(^)	Type (@)	Multiplier (#)	FRL (&)	FRL (&)	Manufacturer
M55342^04@1#24&	1,240,000	100 (char. E, H) or 150 (char. K, M)	E, H, K, M	B, C, W	F	S, T	P, R	DAL,SOA
M55342^04@1#27&	1,270,000	100 (char. E, H) or 150 (char. K, M)	E, H, K, M	B, C, W	F	S, T	P, R	DAL,SOA
M55342^04@1#30&	1,300,000	100 (char. E, H) or 150 (char. K, M)	E, H, K, M	B, C, W	F, T, L	S, T	P, R	DAL,SOA
M55342^04@1#33&	1,330,000	100 (char. E, H) or 150 (char. K, M)	E, H, K, M	B, C, W	F	S, T	P, R	DAL,SOA
M55342^04@1#37&	1,370,000	100 (char. E, H) or 150 (char. K, M)	E, H, K, M	B, C, W	F	S, T	P, R	DAL,SOA
M55342^04@1#40&	1,400,000	100 (char. E, H) or 150 (char. K, M)	E, H, K, M	B, C, W	F	S, T	P, R	DAL,SOA
M55342^04@1#43&	1,430,000	100 (char. E, H) or 150 (char. K, M)	E, H, K, M	B, C, W	F	S, T	P, R	DAL,SOA
M55342^04@1#47&	1,470,000	100 (char. E, H) or 150 (char. K, M)	E, H, K, M	B, C, W	F	S, T	P, R	DAL,SOA
M55342^04@1#50&	1,500,000	100 (char. E, H) or 150 (char. K, M)	E, H, K, M	B, C, W	F, T, L, P	S, T	P, R	DAL,SOA
	Resistance	Power	Char.	Term.	Resistance Tol./	Level 1	Level 2	
Part Number	Value (Ohms)	Rating (mW)	(^)	Type (@)	Multiplier (#)	FRL (&)	FRL (&)	Manufacturer
M55342^04@1#54&	1,540,000	100 (char. E, H) or 150 (char. K, M)	E, H, K, M	B, C, W	F	S, T	P, R	DAL,SOA
M55342^04@1#58&	1,580,000	100 (char. E, H) or 150 (char. K, M)	E, H, K, M	B, C, W	F	S, T	P, R	DAL,SOA
M55342^04@1#60&	1,600,000	100 (char. E, H) or 150 (char. K, M)	E, H, K, M	B, C, W	T, L	S, T	P, R	DAL,SOA
M55342^04@1#62&	1,620,000	100 (char. E, H) or 150 (char. K, M)	E, H, K, M	B, C, W	F	S, T	P, R	DAL,SOA
M55342^04@1#65&	1,650,000	100 (char. E, H) or 150 (char. K, M)	E, H, K, M	B, C, W	F	S, T	P, R	DAL,SOA
M55342^04@1#69&	1,690,000	100 (char. E, H) or 150 (char. K, M)	E, H, K, M	B, C, W	F	S, T	P, R	DAL,SOA
M55342^04@1#74&	1,740,000	100 (char. E, H) or 150 (char. K, M)	E, H, K, M	B, C, W	F	S, T	P, R	DAL,SOA
M55342^04@1#78&	1,780,000	100 (char. E, H) or 150 (char. K, M)	E, H, K, M	B, C, W	F	S, T	P, R	DAL,SOA
M55342^04@1#80&	1,800,000	100 (char. E, H) or 150 (char. K, M)	E, H, K, M	B, C, W	T, L, P	S, T	P, R	DAL,SOA
	Resistance	Power	Char.	Term.	Resistance Tol./	Level 1	Level 2	
Part Number	Value (Ohms)	Rating (mW)	(^)	Type (@)	Multiplier (#)	FRL (&)	FRL (&)	Manufacturer
M55342^04@1#82&	1,820,000	100 (char. E, H) or 150 (char. K, M)	E, H, K, M	B, C, W	F	S, T	P, R	DAL,SOA
M55342^04@1#87&	1,870,000	100 (char. E, H) or 150 (char. K, M)	E, H, K, M	B, C, W	F	S, T	P, R	DAL,SOA
M55342^04@1#91&	1,910,000	100 (char. E, H) or 150 (char. K, M)	E, H, K, M	B, C, W	F	S, T	P, R	DAL,SOA
M55342^04@1#96&	1,960,000	100 (char. E, H) or 150 (char. K, M)	E, H, K, M	B, C, W	F	S, T	P, R	DAL,SOA
M55342^04@2#00&	2,000,000	100 (char. E, H) or 150 (char. K, M)	E, H, K, M	B, C, W	F, T, L, P	S, T	P, R	DAL,SOA
M55342^04@2#05&	2,050,000	100 (char. E, H) or 150 (char. K, M)	E, H, K, M	B, C, W	F	S, T	P, R	DAL,SOA

M55342^04@2#10&	2,100,000	100 (char. E, H) or 150 (char. K, M)	E, H, K, M	B, C, W	F	S, T	P, R	DAL,SOA
M55342^04@2#15&	2,150,000	100 (char. E, H) or 150 (char. K, M)	E, H, K, M	B, C, W	F	S, T	P, R	DAL,SOA
M55342^04@2#20&	2,200,000	100 (char. E, H) or 150 (char. K, M)	E, H, K, M	B, C, W	T, L, P	S, T	P, R	DAL,SOA
	Resistance	Power	Char.	Term.	Resistance Tol./	Level 1	Level 2	
Part Number	Value (Ohms)	Rating (mW)	(^)	Type (@)	Multiplier (#)	FRL (&)	FRL (&)	Manufacturer
M55342^04@2#21&	2,210,000	100 (char. E, H) or 150 (char. K, M)	E, H, K, M	B, C, W	F	S, T	P, R	DAL,SOA
M55342^04@2#26&	2,260,000	100 (char. E, H) or 150 (char. K, M)	E, H, K, M	B, C, W	F	S, T	P, R	DAL,SOA
M55342^04@2#32&	2,320,000	100 (char. E, H) or 150 (char. K, M)	E, H, K, M	B, C, W	F	S, T	P, R	DAL,SOA
M55342^04@2#37&	2,370,000	100 (char. E, H) or 150 (char. K, M)	E, H, K, M	B, C, W	F	S, T	P, R	DAL,SOA
M55342^04@2#40&	2,400,000	100 (char. E, H) or 150 (char. K, M)	E, H, K, M	B, C, W	T, L	S, T	P, R	DAL,SOA
M55342^04@2#43&	2,430,000	100 (char. E, H) or 150 (char. K, M)	E, H, K, M	B, C, W	F	S, T	P, R	DAL,SOA
M55342^04@2#49&	2,490,000	100 (char. E, H) or 150 (char. K, M)	E, H, K, M	B, C, W	F	S, T	P, R	DAL,SOA
M55342^04@2#55&	2,550,000	100 (char. E, H) or 150 (char. K, M)	E, H, K, M	B, C, W	F	S, T	P, R	DAL,SOA
M55342^04@2#61&	2,610,000	100 (char. E, H) or 150 (char. K, M)	E, H, K, M	B, C, W	F	S, T	P, R	DAL,SOA
	Resistance	Power	Char.	Term.	Resistance Tol./	Level 1	Level 2	
Part Number	Value (Ohms)	Rating (mW)	(^)	Type (@)	Multiplier (#)	FRL (&)	FRL (&)	Manufacturer
M55342^04@2#67&	2,670,000	100 (char. E, H) or 150 (char. K, M)	E, H, K, M	B, C, W	F	S, T	P, R	DAL,SOA
M55342^04@2#70&	2,700,000	100 (char. E, H) or 150 (char. K, M)	E, H, K, M	B, C, W	T, L, P	S, T	P, R	DAL,SOA
M55342^04@2#74&	2,740,000	100 (char. E, H) or 150 (char. K, M)	E, H, K, M	B, C, W	F	S, T	P, R	DAL,SOA
M55342^04@2#80&	2,800,000	100 (char. E, H) or 150 (char. K, M)	E, H, K, M	B, C, W	F	S, T	P, R	DAL,SOA
M55342^04@2#87&	2,870,000	100 (char. E, H) or 150 (char. K, M)	E, H, K, M	B, C, W	F	S, T	P, R	DAL,SOA
M55342^04@2#94&	2,940,000	100 (char. E, H) or 150 (char. K, M)	E, H, K, M	B, C, W	F	S, T	P, R	DAL,SOA
M55342^04@3#00&	3,000,000	100 (char. E, H) or 150 (char. K, M)	E, H, K, M	B, C, W	T, L	S, T	P, R	DAL,SOA
M55342^04@3#01&	3,010,000	100 (char. E, H) or 150 (char. K, M)	E, H, K, M	B, C, W	F	S, T	P, R	DAL,SOA
M55342^04@3#09&	3,090,000	100 (char. E, H) or 150 (char. K, M)	E, H, K, M	B, C, W	F	S, T	P, R	DAL,SOA
	Resistance	Power	Char.	Term.	Resistance Tol./	Level 1	Level 2	
Part Number	Value (Ohms)	Rating (mW)	(^)	Type (@)	Multiplier (#)	FRL (&)	FRL (&)	Manufacturer
M55342^04@3#16&	3,160,000	100 (char. E, H) or 150 (char. K, M)	E, H, K, M	B, C, W	F	S, T	P, R	DAL,SOA
M55342^04@3#24&	3,240,000	100 (char. E, H) or 150 (char. K, M)	E, H, K, M	B, C, W	F	S, T	P, R	DAL,SOA
M55342^04@3#30&	3,300,000	100 (char. E, H) or 150 (char. K, M)	E, H, K, M	B, C, W	T, L, P	S, T	P, R	DAL,SOA
M55342^04@3#32&	3,320,000	100 (char. E, H) or 150 (char. K, M)	E, H, K, M	B, C, W	F	S, T	P, R	DAL,SOA
M55342^04@3#40&	3,400,000	100 (char. E, H) or 150 (char. K, M)	E, H, K, M	B, C, W	F	S, T	P, R	DAL,SOA
M55342^04@3#48&	3,480,000	100 (char. E, H) or 150 (char. K, M)	E, H, K, M	B, C, W	F	S, T	P, R	DAL,SOA
M55342^04@3#57&	3,570,000	100 (char. E, H) or 150 (char. K, M)	E, H, K, M	B, C, W	F	S, T	P, R	DAL,SOA
M55342^04@3#60&	3,600,000	100 (char. E, H) or 150 (char. K, M)	E, H, K, M	B, C, W	T, L	S, T	P, R	DAL,SOA
M55342^04@3#65&	3,650,000	100 (char. E, H) or 150 (char. K, M)	E, H, K, M	B, C, W	F	S, T	P, R	DAL,SOA
	Resistance	Power	Char.	Term.	Resistance Tol./	Level 1	Level 2	
Part Number	Value (Ohms)	Rating (mW)	(^)	Type (@)	Multiplier (#)	FRL (&)	FRL (&)	Manufacturer
M55342^04@3#74&	3,740,000	100 (char. E, H) or 150 (char. K, M)	E, H, K, M	B, C, W	F	S, T	P, R	DAL,SOA
M55342^04@3#83&	3,830,000	100 (char. E, H) or 150 (char. K, M)	E, H, K, M	B, C, W	F	S, T	P, R	DAL,SOA
M55342^04@3#90&	3,900,000	100 (char. E, H) or 150 (char. K, M)	E, H, K, M	B, C, W	T, L, P	S, T	P, R	DAL,SOA
M55342^04@3#92&	3,920,000	100 (char. E, H) or 150 (char. K, M)	E, H, K, M	B, C, W	F	S, T	P, R	DAL,SOA
M55342^04@4#02&	4,020,000	100 (char. E, H) or 150 (char. K, M)	E, H, K, M	B, C, W	F	S, T	P, R	DAL,SOA
M55342^04@4#12&	4,120,000	100 (char. E, H) or 150 (char. K, M)	E, H, K, M	B, C, W	F	S, T	P, R	DAL,SOA
M55342^04@4#22&	4,220,000	100 (char. E, H) or 150 (char. K, M)	E, H, K, M	B, C, W	F	S, T	P, R	DAL,SOA
M55342^04@4#30&	4,300,000	100 (char. E, H) or 150 (char. K, M)	E, H, K, M	B, C, W	T, L	S, T	P, R	DAL,SOA
M55342^04@4#32&	4,320,000	100 (char. E, H) or 150 (char. K, M)	E, H, K, M	B, C, W	F	S, T	P, R	DAL,SOA

	Resistance	Power	Char.	Term.	Resistance Tol./	Level 1	Level 2	
Part Number	Value (Ohms)	Rating (mW)	(^)	Type (@)	Multiplier (#)	FRL (&)	FRL (&)	Manufacturer
M55342^04@4#42&	4,420,000	100 (char. E, H) or 150 (char. K, M)	E, H, K, M	B, C, W	F	S, T	P, R	DAL,SOA
M55342^04@4#53&	4,530,000	100 (char. E, H) or 150 (char. K, M)	E, H, K, M	B, C, W	F	S, T	P, R	DAL,SOA
M55342^04@4#64&	4,640,000	100 (char. E, H) or 150 (char. K, M)	E, H, K, M	B, C, W	F	S, T	P, R	DAL,SOA
M55342^04@4#70&	4,700,000	100 (char. E, H) or 150 (char. K, M)	E, H, K, M	B, C, W	T, L, P	S, T	P, R	DAL,SOA
	Resistance	Power	Char.	Term.	Resistance Tol./	Level 1	Level 2	
Part Number	Value (Ohms)	Rating (mW)	(^)	Type (@)	Multiplier (#)	FRL (&)	FRL (&)	Manufacturer

MIL-PRF-55342/8 (RM2010) Film Chip Resistors

5.60 Ohms Through 15,000,000 Ohms

	Resistance	Power	Char.	Term.	Res. Tol./	Level 1	Level 2	
Part Number	Value (Ohms)	Rating (mW)	(^)	Type (@)	Multiplier (#)	FRL (&)	FRL (&)	Manufacturer
M55342^08@5#60&	5.60	400 (char. E, H) or 800 (char. K, M)	E, H, K, M	B, C, W	G, J, M	S	P, R	DAL,MSI,SOA
M55342^08@5#62&	5.62	400 (char. E, H) or 800 (char. K, M)	E, H, K, M	B, C, W	D	S	P, R	DAL,MSI,SOA
M55342^08@5#76&	5.76	400 (char. E, H) or 800 (char. K, M)	E, H, K, M	B, C, W	D	S	P, R	DAL,MSI,SOA
M55342^08@5#90&	5.90	400 (char. E, H) or 800 (char. K, M)	E, H, K, M	B, C, W	D	S	P, R	DAL,MSI,SOA
M55342^08@6#04&	6.04	400 (char. E, H) or 800 (char. K, M)	E, H, K, M	B, C, W	D	S	P, R	DAL,MSI,SOA
M55342^08@6#19&	6.19	400 (char. E, H) or 800 (char. K, M)	E, H, K, M	B, C, W	D	S	P, R	DAL,MSI,SOA
M55342^08@6#20&	6.20	400 (char. E, H) or 800 (char. K, M)	E, H, K, M	B, C, W	G, J	S	P, R	DAL,MSI,SOA
M55342^08@6#34&	6.34	400 (char. E, H) or 800 (char. K, M)	E, H, K, M	B, C, W	D	S	P, R	DAL,MSI,SOA
M55342^08@6#49&	6.49	400 (char. E, H) or 800 (char. K, M)	E, H, K, M	B, C, W	D	S	P, R	DAL,MSI,SOA
M55342^08@6#65&	6.65	400 (char. E, H) or 800 (char. K, M)	E, H, K, M	B, C, W	D	S	P, R	DAL,MSI,SOA
M55342^08@6#80&	6.80	400 (char. E, H) or 800 (char. K, M)	E, H, K, M	B, C, W	G, J, M	S	P, R	DAL,MSI,SOA
M55342^08@6#81&	6.81	400 (char. E, H) or 800 (char. K, M)	E, H, K, M	B, C, W	D	S	P, R	DAL,MSI,SOA
M55342^08@6#98&	6.98	400 (char. E, H) or 800 (char. K, M)	E, H, K, M	B, C, W	D	S	P, R	DAL,MSI,SOA
M55342^08@7#15&	7.15	400 (char. E, H) or 800 (char. K, M)	E, H, K, M	B, C, W	D	S	P, R	DAL,MSI,SOA
M55342^08@7#32&	7.32	400 (char. E, H) or 800 (char. K, M)	E, H, K, M	B, C, W	D	S	P, R	DAL,MSI,SOA
M55342^08@7#50&	7.50	400 (char. E, H) or 800 (char. K, M)	E, H, K, M	B, C, W	D, G, J	S	P, R	DAL,MSI,SOA
M55342^08@7#68&	7.68	400 (char. E, H) or 800 (char. K, M)	E, H, K, M	B, C, W	D	S	P, R	DAL,MSI,SOA
M55342^08@7#87&	7.87	400 (char. E, H) or 800 (char. K, M)	E, H, K, M	B, C, W	D	S	P, R	DAL,MSI,SOA
M55342^08@8#06&	8.06	400 (char. E, H) or 800 (char. K, M)	E, H, K, M	B, C, W	D	S	P, R	DAL,MSI,SOA
M55342^08@8#20&	8.20	400 (char. E, H) or 800 (char. K, M)	E, H, K, M	B, C, W	G, J, M	S	P, R	DAL,MSI,SOA
M55342^08@8#25&	8.25	400 (char. E, H) or 800 (char. K, M)	E, H, K, M	B, C, W	D	S	P, R	DAL,MSI,SOA
M55342^08@8#45&	8.45	400 (char. E, H) or 800 (char. K, M)	E, H, K, M	B, C, W	D	S	P, R	DAL,MSI,SOA
M55342^08@8#66&	8.66	400 (char. E, H) or 800 (char. K, M)	E, H, K, M	B, C, W	D	S	P, R	DAL,MSI,SOA
M55342^08@8#87&	8.87	400 (char. E, H) or 800 (char. K, M)	E, H, K, M	B, C, W	D	S	P, R	DAL,MSI,SOA
M55342^08@9#09&	9.09	400 (char. E, H) or 800 (char. K, M)	E, H, K, M	B, C, W	D	S	P, R	DAL,MSI,SOA
M55342^08@9#10&	9.10	400 (char. E, H) or 800 (char. K, M)	E, H, K, M	B, C, W	G, J	S	P, R	DAL,MSI,SOA
M55342^08@9#31&	9.31	400 (char. E, H) or 800 (char. K, M)	E, H, K, M	B, C, W	D	S	P, R	DAL,MSI,SOA
M55342^08@9#53&	9.53	400 (char. E, H) or 800 (char. K, M)	E, H, K, M	B, C, W	D	S	P, R	DAL,MSI,SOA
M55342^08@9#76&	9.76	400 (char. E, H) or 800 (char. K, M)	E, H, K, M	B, C, W	D	S	P, R	DAL,MSI,SOA
M55342^08@10#0&	10.0	400 (char. E, H) or 800 (char. K, M)	E, H, K, M	B, C, W	D, G, J, M	S	P, R	DAL,MSI,SOA
M55342^08@10#2&	10.2	400 (char. E, H) or 800 (char. K, M)	E, H, K, M	B, C, W	D	S	P, R	DAL,MSI,SOA

M55342^08@10#5&	10.5	400 (char. E, H) or 800 (char. K, M)	E, H, K, M	B, C, W	D	S	P, R	DAL,MSI,SOA
M55342^08@10#7&	10.7	400 (char. E, H) or 800 (char. K, M)	E, H, K, M	B, C, W	D	S	P, R	DAL,MSI,SOA
M55342^08@11#0&	11.0	400 (char. E, H) or 800 (char. K, M)	E, H, K, M	B, C, W	D, G, J	S	P, R	DAL,MSI,SOA
M55342^08@11#3&	11.3	400 (char. E, H) or 800 (char. K, M)	E, H, K, M	B, C, W	D	S	P, R	DAL,MSI,SOA
M55342^08@11#5&	11.5	400 (char. E, H) or 800 (char. K, M)	E, H, K, M	B, C, W	D	S	P, R	DAL,MSI,SOA
M55342^08@11#8&	11.8	400 (char. E, H) or 800 (char. K, M)	E, H, K, M	B, C, W	D	S	P, R	DAL,MSI,SOA
M55342^08@12#0&	12.0	400 (char. E, H) or 800 (char. K, M)	E, H, K, M	B, C, W	G, J, M	S	P, R	DAL,MSI,SOA
M55342^08@12#1&	12.1	400 (char. E, H) or 800 (char. K, M)	E, H, K, M	B, C, W	D	S	P, R	DAL,MSI,SOA
M55342^08@12#4&	12.4	400 (char. E, H) or 800 (char. K, M)	E, H, K, M	B, C, W	D	S	P, R	DAL,MSI,SOA
M55342^08@12#7&	12.7	400 (char. E, H) or 800 (char. K, M)	E, H, K, M	B, C, W	D	S	P, R	DAL,MSI,SOA
M55342^08@13#0&	13.0	400 (char. E, H) or 800 (char. K, M)	E, H, K, M	B, C, W	D, G, J	S	P, R	DAL,MSI,SOA
M55342^08@13#3&	13.3	400 (char. E, H) or 800 (char. K, M)	E, H, K, M	B, C, W	D	S	P, R	DAL,MSI,SOA
M55342^08@13#7&	13.7	400 (char. E, H) or 800 (char. K, M)	E, H, K, M	B, C, W	D	S	P, R	DAL,MSI,SOA
M55342^08@14#0&	14.0	400 (char. E, H) or 800 (char. K, M)	E, H, K, M	B, C, W	D	S	P, R	DAL,MSI,SOA
M55342^08@14#3&	14.3	400 (char. E, H) or 800 (char. K, M)	E, H, K, M	B, C, W	D	S	P, R	DAL,MSI,SOA
M55342^08@14#7&	14.7	400 (char. E, H) or 800 (char. K, M)	E, H, K, M	B, C, W	D	S	P, R	DAL,MSI,SOA
M55342^08@15#0&	15.0	400 (char. E, H) or 800 (char. K, M)	E, H, K, M	B, C, W	D, G, J, M	S	P, R	DAL,MSI,SOA
M55342^08@15#4&	15.4	400 (char. E, H) or 800 (char. K, M)	E, H, K, M	B, C, W	D	S	P, R	DAL,MSI,SOA
M55342^08@15#8&	15.8	400 (char. E, H) or 800 (char. K, M)	E, H, K, M	B, C, W	D	S	P, R	DAL,MSI,SOA
M55342^08@16#0&	16.0	400 (char. E, H) or 800 (char. K, M)	E, H, K, M	B, C, W	G, J	S	P, R	DAL,MSI,SOA
M55342^08@16#2&	16.2	400 (char. E, H) or 800 (char. K, M)	E, H, K, M	B, C, W	D	S	P, R	DAL,MSI,SOA
M55342^08@16#5&	16.5	400 (char. E, H) or 800 (char. K, M)	E, H, K, M	B, C, W	D	S	P, R	DAL,MSI,SOA
M55342^08@16#9&	16.9	400 (char. E, H) or 800 (char. K, M)	E, H, K, M	B, C, W	D	S	P, R	DAL,MSI,SOA
M55342^08@17#4&	17.4	400 (char. E, H) or 800 (char. K, M)	E, H, K, M	B, C, W	D	S	P, R	DAL,MSI,SOA
M55342^08@17#8&	17.8	400 (char. E, H) or 800 (char. K, M)	E, H, K, M	B, C, W	D	S	P, R	DAL,MSI,SOA
M55342^08@18#0&	18.0	400 (char. E, H) or 800 (char. K, M)	E, H, K, M	B, C, W	G, J, M	S	P, R	DAL,MSI,SOA
M55342^08@18#2&	18.2	400 (char. E, H) or 800 (char. K, M)	E, H, K, M	B, C, W	D	S	P, R	DAL,MSI,SOA
M55342^08@18#7&	18.7	400 (char. E, H) or 800 (char. K, M)	E, H, K, M	B, C, W	D	S	P, R	DAL,MSI,SOA
M55342^08@19#1&	19.1	400 (char. E, H) or 800 (char. K, M)	E, H, K, M	B, C, W	D	S	P, R	DAL,MSI,SOA
M55342^08@19#6&	19.6	400 (char. E, H) or 800 (char. K, M)	E, H, K, M	B, C, W	D	S	P, R	DAL,MSI,SOA
M55342^08@20#0&	20.0	400 (char. E, H) or 800 (char. K, M)	E, H, K, M	B, C, W	D, G, J, M	S	P, R	DAL,MSI,SOA
M55342^08@20#5&	20.5	400 (char. E, H) or 800 (char. K, M)	E, H, K, M	B, C, W	D	S	P, R	DAL,MSI,SOA
M55342^08@21#0&	21.0	400 (char. E, H) or 800 (char. K, M)	E, H, K, M	B, C, W	D	S	P, R	DAL,MSI,SOA
M55342^08@21#5&	21.5	400 (char. E, H) or 800 (char. K, M)	E, H, K, M	B, C, W	D	S	P, R	DAL,MSI,SOA
M55342^08@22#0&	22.0	400 (char. E, H) or 800 (char. K, M)	E, H, K, M	B, C, W	G, J, M	S	P, R	DAL,MSI,SOA
M55342^08@22#1&	22.1	400 (char. E, H) or 800 (char. K, M)	E, H, K, M	B, C, W	D	S	P, R	DAL,MSI,SOA
M55342^08@22#6&	22.6	400 (char. E, H) or 800 (char. K, M)	E, H, K, M	B, C, W	D	S	P, R	DAL,MSI,SOA
M55342^08@23#2&	23.2	400 (char. E, H) or 800 (char. K, M)	E, H, K, M	B, C, W	D	S	P, R	DAL,MSI,SOA
M55342^08@23#7&	23.7	400 (char. E, H) or 800 (char. K, M)	E, H, K, M	B, C, W	D	S	P, R	DAL,MSI,SOA
M55342^08@24#0&	24.0	400 (char. E, H) or 800 (char. K, M)	E, H, K, M	B, C, W	G, J	S	P, R	DAL,MSI,SOA
M55342^08@24#3&	24.3	400 (char. E, H) or 800 (char. K, M)	E, H, K, M	B, C, W	D	S	P, R	DAL,MSI,SOA
M55342^08@24#9&	24.9	400 (char. E, H) or 800 (char. K, M)	E, H, K, M	B, C, W	D	S	P, R	DAL,MSI,SOA
M55342^08@25#5&	25.5	400 (char. E, H) or 800 (char. K, M)	E, H, K, M	B, C, W	D	S	P, R	DAL,MSI,SOA
M55342^08@26#1&	26.1	400 (char. E, H) or 800 (char. K, M)	E, H, K, M	B, C, W	D	S	P, R	DAL,MSI,SOA
M55342^08@26#7&	26.7	400 (char. E, H) or 800 (char. K, M)	E, H, K, M	B, C, W	D	S	P, R	DAL,MSI,SOA
M55342^08@27#0&	27.0	400 (char. E, H) or 800 (char. K, M)	E, H, K, M	B, C, W	G, J, M	S	P, R	DAL,MSI,SOA
M55342^08@27#4&	27.4	400 (char. E, H) or 800 (char. K, M)	E, H, K, M	B, C, W	D	S	P, R	DAL,MSI,SOA

M55342^08@28#0&	28.0	400 (char. E, H) or 800 (char. K, M)	E, H, K, M	B, C, W	D	S	P, R	DAL,MSI,SOA
M55342^08@28#7&	28.7	400 (char. E, H) or 800 (char. K, M)	E, H, K, M	B, C, W	D	S	P, R	DAL,MSI,SOA
M55342^08@29#4&	29.4	400 (char. E, H) or 800 (char. K, M)	E, H, K, M	B, C, W	D	S	P, R	DAL,MSI,SOA
M55342^08@30#0&	30.0	400 (char. E, H) or 800 (char. K, M)	E, H, K, M	B, C, W	G, J	S	P, R	DAL,MSI,SOA
M55342^08@30#1&	30.1	400 (char. E, H) or 800 (char. K, M)	E, H, K, M	B, C, W	D	S	P, R	DAL,MSI,SOA
M55342^08@30#9&	30.9	400 (char. E, H) or 800 (char. K, M)	E, H, K, M	B, C, W	D	S	P, R	DAL,MSI,SOA
M55342^08@31#6&	31.6	400 (char. E, H) or 800 (char. K, M)	E, H, K, M	B, C, W	D	S	P, R	DAL,MSI,SOA
M55342^08@32#4&	32.4	400 (char. E, H) or 800 (char. K, M)	E, H, K, M	B, C, W	D	S	P, R	DAL,MSI,SOA
M55342^08@33#0&	33.0	400 (char. E, H) or 800 (char. K, M)	E, H, K, M	B, C, W	G, J, M	S	P, R	DAL,MSI,SOA
M55342^08@33#2&	33.2	400 (char. E, H) or 800 (char. K, M)	E, H, K, M	B, C, W	D	S	P, R	DAL,MSI,SOA
M55342^08@34#0&	34.0	400 (char. E, H) or 800 (char. K, M)	E, H, K, M	B, C, W	D	S	P, R	DAL,MSI,SOA
M55342^08@34#8&	34.8	400 (char. E, H) or 800 (char. K, M)	E, H, K, M	B, C, W	D	S	P, R	DAL,MSI,SOA
M55342^08@35#7&	35.7	400 (char. E, H) or 800 (char. K, M)	E, H, K, M	B, C, W	D	S	P, R	DAL,MSI,SOA
M55342^08@36#0&	36.0	400 (char. E, H) or 800 (char. K, M)	E, H, K, M	B, C, W	G, J	S	P, R	DAL,MSI,SOA
M55342^08@36#5&	36.5	400 (char. E, H) or 800 (char. K, M)	E, H, K, M	B, C, W	D	S	P, R	DAL,MSI,SOA
M55342^08@37#4&	37.4	400 (char. E, H) or 800 (char. K, M)	E, H, K, M	B, C, W	D	S	P, R	DAL,MSI,SOA
M55342^08@38#3&	38.3	400 (char. E, H) or 800 (char. K, M)	E, H, K, M	B, C, W	D	S	P, R	DAL,MSI,SOA
M55342^08@39#0&	39.0	400 (char. E, H) or 800 (char. K, M)	E, H, K, M	B, C, W	G, J, M	S	P, R	DAL,MSI,SOA
M55342^08@39#2&	39.2	400 (char. E, H) or 800 (char. K, M)	E, H, K, M	B, C, W	D	S	P, R	DAL,MSI,SOA
M55342^08@40#2&	40.2	400 (char. E, H) or 800 (char. K, M)	E, H, K, M	B, C, W	D	S	P, R	DAL,MSI,SOA
M55342^08@41#2&	41.2	400 (char. E, H) or 800 (char. K, M)	E, H, K, M	B, C, W	D	S	P, R	DAL,MSI,SOA
M55342^08@42#2&	42.2	400 (char. E, H) or 800 (char. K, M)	E, H, K, M	B, C, W	D	S	P, R	DAL,MSI,SOA
M55342^08@43#0&	43.0	400 (char. E, H) or 800 (char. K, M)	E, H, K, M	B, C, W	G, J	S	P, R	DAL,MSI,SOA
M55342^08@43#2&	43.2	400 (char. E, H) or 800 (char. K, M)	E, H, K, M	B, C, W	D	S	P, R	DAL,MSI,SOA
M55342^08@44#2&	44.2	400 (char. E, H) or 800 (char. K, M)	E, H, K, M	B, C, W	D	S	P, R	DAL,MSI,SOA
M55342^08@45#3&	45.3	400 (char. E, H) or 800 (char. K, M)	E, H, K, M	B, C, W	D	S	P, R	DAL,MSI,SOA
M55342^08@46#4&	46.4	400 (char. E, H) or 800 (char. K, M)	E, H, K, M	B, C, W	D	S	P, R	DAL,MSI,SOA
M55342^08@47#0&	47.0	400 (char. E, H) or 800 (char. K, M)	E, H, K, M	B, C, W	G, J, M	S	P, R	DAL,MSI,SOA
M55342^08@47#5&	47.5	400 (char. E, H) or 800 (char. K, M)	E, H, K, M	B, C, W	D	S	P, R	DAL,MSI,SOA
M55342^08@48#7&	48.7	400 (char. E, H) or 800 (char. K, M)	E, H, K, M	B, C, W	D	S	P, R	DAL,MSI,SOA
M55342^08@49#9&	49.9	400 (char. E, H) or 800 (char. K, M)	E, H, K, M	B, C, W	D	S	P, R	DAL,MSI,SOA
M55342^08@51#0&	51.0	400 (char. E, H) or 800 (char. K, M)	E, H, K, M	B, C, W	G, J	S	P, R	DAL,MSI,SOA
M55342^08@51#1&	51.1	400 (char. E, H) or 800 (char. K, M)	E, H, K, M	B, C, W	D	S	P, R	DAL,MSI,SOA
M55342^08@52#3&	52.3	400 (char. E, H) or 800 (char. K, M)	E, H, K, M	B, C, W	D	S	P, R	DAL,MSI,SOA
M55342^08@53#6&	53.6	400 (char. E, H) or 800 (char. K, M)	E, H, K, M	B, C, W	D	S	P, R	DAL,MSI,SOA
M55342^08@54#9&	54.9	400 (char. E, H) or 800 (char. K, M)	E, H, K, M	B, C, W	D	S	P, R	DAL,MSI,SOA
M55342^08@56#0&	56.0	400 (char. E, H) or 800 (char. K, M)	E, H, K, M	B, C, W	G, J, M	S	P, R	DAL,MSI,SOA
M55342^08@56#2&	56.2	400 (char. E, H) or 800 (char. K, M)	E, H, K, M	B, C, W	D	S	P, R	DAL,MSI,SOA
M55342^08@57#6&	57.6	400 (char. E, H) or 800 (char. K, M)	E, H, K, M	B, C, W	D	S	P, R	DAL,MSI,SOA
M55342^08@59#0&	59.0	400 (char. E, H) or 800 (char. K, M)	E, H, K, M	B, C, W	D	S	P, R	DAL,MSI,SOA
M55342^08@60#4&	60.4	400 (char. E, H) or 800 (char. K, M)	E, H, K, M	B, C, W	D	S	P, R	DAL,MSI,SOA
M55342^08@61#9&	61.9	400 (char. E, H) or 800 (char. K, M)	E, H, K, M	B, C, W	D	S	P, R	DAL,MSI,SOA
M55342^08@62#0&	62.0	400 (char. E, H) or 800 (char. K, M)	E, H, K, M	B, C, W	G, J	S	P, R	DAL,MSI,SOA
M55342^08@63#4&	63.4	400 (char. E, H) or 800 (char. K, M)	E, H, K, M	B, C, W	D	S	P, R	DAL,MSI,SOA
M55342^08@64#9&	64.9	400 (char. E, H) or 800 (char. K, M)	E, H, K, M	B, C, W	D	S	P, R	DAL,MSI,SOA
M55342^08@66#5&	66.5	400 (char. E, H) or 800 (char. K, M)	E, H, K, M	B, C, W	D	S	P, R	DAL,MSI,SOA
M55342^08@68#0&	68.0	400 (char. E, H) or 800 (char. K, M)	E, H, K, M	B, C, W	G, J, M	S	P, R	DAL,MSI,SOA

M55342^08@68#1&	68.1	400 (char. E, H) or 800 (char. K, M)	E, H, K, M	B, C, W	D	S	P, R	DAL,MSI,SOA
M55342^08@69#8&	69.8	400 (char. E, H) or 800 (char. K, M)	E, H, K, M	B, C, W	D	S	P, R	DAL,MSI,SOA
M55342^08@71#5&	71.5	400 (char. E, H) or 800 (char. K, M)	E, H, K, M	B, C, W	D	S	P, R	DAL,MSI,SOA
M55342^08@73#2&	73.2	400 (char. E, H) or 800 (char. K, M)	E, H, K, M	B, C, W	D	S	P, R	DAL,MSI,SOA
M55342^08@75#0&	75.0	400 (char. E, H) or 800 (char. K, M)	E, H, K, M	B, C, W	D, G, J	S	P, R	DAL,MSI,SOA
M55342^08@76#8&	76.8	400 (char. E, H) or 800 (char. K, M)	E, H, K, M	B, C, W	D	S	P, R	DAL,MSI,SOA
M55342^08@78#7&	78.7	400 (char. E, H) or 800 (char. K, M)	E, H, K, M	B, C, W	D	S	P, R	DAL,MSI,SOA
M55342^08@80#6&	80.6	400 (char. E, H) or 800 (char. K, M)	E, H, K, M	B, C, W	D	S	P, R	DAL,MSI,SOA
M55342^08@82#0&	82.0	400 (char. E, H) or 800 (char. K, M)	E, H, K, M	B, C, W	G, J, M	S	P, R	DAL,MSI,SOA
M55342^08@82#5&	82.5	400 (char. E, H) or 800 (char. K, M)	E, H, K, M	B, C, W	D	S	P, R	DAL,MSI,SOA
M55342^08@84#5&	84.5	400 (char. E, H) or 800 (char. K, M)	E, H, K, M	B, C, W	D	S	P, R	DAL,MSI,SOA
M55342^08@86#6&	86.6	400 (char. E, H) or 800 (char. K, M)	E, H, K, M	B, C, W	D	S	P, R	DAL,MSI,SOA
M55342^08@88#7&	88.7	400 (char. E, H) or 800 (char. K, M)	E, H, K, M	B, C, W	D	S	P, R	DAL,MSI,SOA
M55342^08@90#9&	90.9	400 (char. E, H) or 800 (char. K, M)	E, H, K, M	B, C, W	D	S	P, R	DAL,MSI,SOA
M55342^08@91#0&	91.0	400 (char. E, H) or 800 (char. K, M)	E, H, K, M	B, C, W	G, J	S	P, R	DAL,MSI,SOA
M55342^08@93#1&	93.1	400 (char. E, H) or 800 (char. K, M)	E, H, K, M	B, C, W	D	S	P, R	DAL,MSI,SOA
M55342^08@95#3&	95.3	400 (char. E, H) or 800 (char. K, M)	E, H, K, M	B, C, W	D	S	P, R	DAL,MSI,SOA
M55342^08@97#6&	97.6	400 (char. E, H) or 800 (char. K, M)	E, H, K, M	B, C, W	D	S	P, R	DAL,MSI,SOA
M55342^08@100#&	100	400 (char. E, H) or 800 (char. K, M)	E, H, K, M	B, C, W	D, G, J, M	S	P, R	DAL,MSI,SOA
M55342^08@102#&	102	400 (char. E, H) or 800 (char. K, M)	E, H, K, M	B, C, W	D	S	P, R	DAL,MSI,SOA
M55342^08@105#&	105	400 (char. E, H) or 800 (char. K, M)	E, H, K, M	B, C, W	D	S	P, R	DAL,MSI,SOA
M55342^08@107#&	107	400 (char. E, H) or 800 (char. K, M)	E, H, K, M	B, C, W	D	S	P, R	DAL,MSI,SOA
M55342^08@110#&	110	400 (char. E, H) or 800 (char. K, M)	E, H, K, M	B, C, W	D, G, J	S	P, R	DAL,MSI,SOA
M55342^08@113#&	113	400 (char. E, H) or 800 (char. K, M)	E, H, K, M	B, C, W	D	S	P, R	DAL,MSI,SOA
M55342^08@115#&	115	400 (char. E, H) or 800 (char. K, M)	E, H, K, M	B, C, W	D	S	P, R	DAL,MSI,SOA
M55342^08@118#&	118	400 (char. E, H) or 800 (char. K, M)	E, H, K, M	B, C, W	D	S	P, R	DAL,MSI,SOA
M55342^08@120#&	120	400 (char. E, H) or 800 (char. K, M)	E, H, K, M	B, C, W	G, J, M	S	P, R	DAL,MSI,SOA
M55342^08@121#&	121	400 (char. E, H) or 800 (char. K, M)	E, H, K, M	B, C, W	D	S	P, R	DAL,MSI,SOA
M55342^08@124#&	124	400 (char. E, H) or 800 (char. K, M)	E, H, K, M	B, C, W	D	S	P, R	DAL,MSI,SOA
M55342^08@127#&	127	400 (char. E, H) or 800 (char. K, M)	E, H, K, M	B, C, W	D	S	P, R	DAL,MSI,SOA
M55342^08@130#&	130	400 (char. E, H) or 800 (char. K, M)	E, H, K, M	B, C, W	D, G, J	S	P, R	DAL,MSI,SOA
M55342^08@133#&	133	400 (char. E, H) or 800 (char. K, M)	E, H, K, M	B, C, W	D	S	P, R	DAL,MSI,SOA
M55342^08@137#&	137	400 (char. E, H) or 800 (char. K, M)	E, H, K, M	B, C, W	D	S	P, R	DAL,MSI,SOA
M55342^08@140#&	140	400 (char. E, H) or 800 (char. K, M)	E, H, K, M	B, C, W	D	S	P, R	DAL,MSI,SOA
M55342^08@143#&	143	400 (char. E, H) or 800 (char. K, M)	E, H, K, M	B, C, W	D	S	P, R	DAL,MSI,SOA
M55342^08@147#&	147	400 (char. E, H) or 800 (char. K, M)	E, H, K, M	B, C, W	D	S	P, R	DAL,MSI,SOA
M55342^08@150#&	150	400 (char. E, H) or 800 (char. K, M)	E, H, K, M	B, C, W	D, G, J, M	S	P, R	DAL,MSI,SOA
M55342^08@154#&	154	400 (char. E, H) or 800 (char. K, M)	E, H, K, M	B, C, W	D	S	P, R	DAL,MSI,SOA
M55342^08@158#&	158	400 (char. E, H) or 800 (char. K, M)	E, H, K, M	B, C, W	D	S	P, R	DAL,MSI,SOA
M55342^08@160#&	160	400 (char. E, H) or 800 (char. K, M)	E, H, K, M	B, C, W	G, J	S	P, R	DAL,MSI,SOA
M55342^08@162#&	162	400 (char. E, H) or 800 (char. K, M)	E, H, K, M	B, C, W	D	S	P, R	DAL,MSI,SOA
M55342^08@165#&	165	400 (char. E, H) or 800 (char. K, M)	E, H, K, M	B, C, W	D	S	P, R	DAL,MSI,SOA
M55342^08@169#&	169	400 (char. E, H) or 800 (char. K, M)	E, H, K, M	B, C, W	D	S	P, R	DAL,MSI,SOA
M55342^08@174#&	174	400 (char. E, H) or 800 (char. K, M)	E, H, K, M	B, C, W	D	S	P, R	DAL,MSI,SOA
M55342^08@178#&	178	400 (char. E, H) or 800 (char. K, M)	E, H, K, M	B, C, W	D	S	P, R	DAL,MSI,SOA
M55342^08@180#&	180	400 (char. E, H) or 800 (char. K, M)	E, H, K, M	B, C, W	G, J, M	S	P, R	DAL,MSI,SOA
M55342^08@182#&	182	400 (char. E, H) or 800 (char. K, M)	E, H, K, M	B, C, W	D	S	P, R	DAL,MSI,SOA

M55342^08@187#&	187	400 (char. E, H) or 800 (char. K, M)	E, H, K, M	B, C, W	D	S	P, R	DAL,MSI,SOA
M55342^08@191#&	191	400 (char. E, H) or 800 (char. K, M)	E, H, K, M	B, C, W	D	S	P, R	DAL,MSI,SOA
M55342^08@196#&	196	400 (char. E, H) or 800 (char. K, M)	E, H, K, M	B, C, W	D	S	P, R	DAL,MSI,SOA
M55342^08@200#&	200	400 (char. E, H) or 800 (char. K, M)	E, H, K, M	B, C, W	D, G, J, M	S	P, R	DAL,MSI,SOA
M55342^08@205#&	205	400 (char. E, H) or 800 (char. K, M)	E, H, K, M	B, C, W	D	S	P, R	DAL,MSI,SOA
M55342^08@210#&	210	400 (char. E, H) or 800 (char. K, M)	E, H, K, M	B, C, W	D	S	P, R	DAL,MSI,SOA
M55342^08@215#&	215	400 (char. E, H) or 800 (char. K, M)	E, H, K, M	B, C, W	D	S	P, R	DAL,MSI,SOA
M55342^08@220#&	220	400 (char. E, H) or 800 (char. K, M)	E, H, K, M	B, C, W	G, J, M	S	P, R	DAL,MSI,SOA
M55342^08@221#&	221	400 (char. E, H) or 800 (char. K, M)	E, H, K, M	B, C, W	D	S	P, R	DAL,MSI,SOA
M55342^08@226#&	226	400 (char. E, H) or 800 (char. K, M)	E, H, K, M	B, C, W	D	S	P, R	DAL,MSI,SOA
M55342^08@232#&	232	400 (char. E, H) or 800 (char. K, M)	E, H, K, M	B, C, W	D	S	P, R	DAL,MSI,SOA
M55342^08@237#&	237	400 (char. E, H) or 800 (char. K, M)	E, H, K, M	B, C, W	D	S	P, R	DAL,MSI,SOA
M55342^08@240#&	240	400 (char. E, H) or 800 (char. K, M)	E, H, K, M	B, C, W	G, J	S	P, R	DAL,MSI,SOA
M55342^08@243#&	243	400 (char. E, H) or 800 (char. K, M)	E, H, K, M	B, C, W	D	S	P, R	DAL,MSI,SOA
M55342^08@249#&	249	400 (char. E, H) or 800 (char. K, M)	E, H, K, M	B, C, W	D	S	P, R	DAL,MSI,SOA
M55342^08@255#&	255	400 (char. E, H) or 800 (char. K, M)	E, H, K, M	B, C, W	D	S	P, R	DAL,MSI,SOA
M55342^08@261#&	261	400 (char. E, H) or 800 (char. K, M)	E, H, K, M	B, C, W	D	S	P, R	DAL,MSI,SOA
M55342^08@267#&	267	400 (char. E, H) or 800 (char. K, M)	E, H, K, M	B, C, W	D	S	P, R	DAL,MSI,SOA
M55342^08@270#&	270	400 (char. E, H) or 800 (char. K, M)	E, H, K, M	B, C, W	G, J, M	S	P, R	DAL,MSI,SOA
M55342^08@274#&	274	400 (char. E, H) or 800 (char. K, M)	E, H, K, M	B, C, W	D	S	P, R	DAL,MSI,SOA
M55342^08@280#&	280	400 (char. E, H) or 800 (char. K, M)	E, H, K, M	B, C, W	D	S	P, R	DAL,MSI,SOA
M55342^08@287#&	287	400 (char. E, H) or 800 (char. K, M)	E, H, K, M	B, C, W	D	S	P, R	DAL,MSI,SOA
M55342^08@294#&	294	400 (char. E, H) or 800 (char. K, M)	E, H, K, M	B, C, W	D	S	P, R	DAL,MSI,SOA
M55342^08@300#&	300	400 (char. E, H) or 800 (char. K, M)	E, H, K, M	B, C, W	G, J	S	P, R	DAL,MSI,SOA
M55342^08@301#&	301	400 (char. E, H) or 800 (char. K, M)	E, H, K, M	B, C, W	D	S	P, R	DAL,MSI,SOA
M55342^08@309#&	309	400 (char. E, H) or 800 (char. K, M)	E, H, K, M	B, C, W	D	S	P, R	DAL,MSI,SOA
M55342^08@316#&	316	400 (char. E, H) or 800 (char. K, M)	E, H, K, M	B, C, W	D	S	P, R	DAL,MSI,SOA
M55342^08@324#&	324	400 (char. E, H) or 800 (char. K, M)	E, H, K, M	B, C, W	D	S	P, R	DAL,MSI,SOA
M55342^08@330#&	330	400 (char. E, H) or 800 (char. K, M)	E, H, K, M	B, C, W	G, J, M	S	P, R	DAL,MSI,SOA
M55342^08@332#&	332	400 (char. E, H) or 800 (char. K, M)	E, H, K, M	B, C, W	D	S	P, R	DAL,MSI,SOA
M55342^08@340#&	340	400 (char. E, H) or 800 (char. K, M)	E, H, K, M	B, C, W	D	S	P, R	DAL,MSI,SOA
M55342^08@348#&	348	400 (char. E, H) or 800 (char. K, M)	E, H, K, M	B, C, W	D	S	P, R	DAL,MSI,SOA
M55342^08@357#&	357	400 (char. E, H) or 800 (char. K, M)	E, H, K, M	B, C, W	D	S	P, R	DAL,MSI,SOA
M55342^08@360#&	360	400 (char. E, H) or 800 (char. K, M)	E, H, K, M	B, C, W	G, J	S	P, R	DAL,MSI,SOA
M55342^08@365#&	365	400 (char. E, H) or 800 (char. K, M)	E, H, K, M	B, C, W	D	S	P, R	DAL,MSI,SOA
M55342^08@374#&	374	400 (char. E, H) or 800 (char. K, M)	E, H, K, M	B, C, W	D	S	P, R	DAL,MSI,SOA
M55342^08@383#&	383	400 (char. E, H) or 800 (char. K, M)	E, H, K, M	B, C, W	D	S	P, R	DAL,MSI,SOA
M55342^08@390#&	390	400 (char. E, H) or 800 (char. K, M)	E, H, K, M	B, C, W	G, J, M	S	P, R	DAL,MSI,SOA
M55342^08@392#&	392	400 (char. E, H) or 800 (char. K, M)	E, H, K, M	B, C, W	D	S	P, R	DAL,MSI,SOA
M55342^08@402#&	402	400 (char. E, H) or 800 (char. K, M)	E, H, K, M	B, C, W	D	S	P, R	DAL,MSI,SOA
M55342^08@412#&	412	400 (char. E, H) or 800 (char. K, M)	E, H, K, M	B, C, W	D	S	P, R	DAL,MSI,SOA
M55342^08@422#&	422	400 (char. E, H) or 800 (char. K, M)	E, H, K, M	B, C, W	D	S	P, R	DAL,MSI,SOA
M55342^08@430#&	430	400 (char. E, H) or 800 (char. K, M)	E, H, K, M	B, C, W	G, J	S	P, R	DAL,MSI,SOA
M55342^08@432#&	432	400 (char. E, H) or 800 (char. K, M)	E, H, K, M	B, C, W	D	S	P, R	DAL,MSI,SOA
M55342^08@442#&	442	400 (char. E, H) or 800 (char. K, M)	E, H, K, M	B, C, W	D	S	P, R	DAL,MSI,SOA
M55342^08@453#&	453	400 (char. E, H) or 800 (char. K, M)	E, H, K, M	B, C, W	D	S	P, R	DAL,MSI,SOA
M55342^08@464#&	464	400 (char. E, H) or 800 (char. K, M)	E, H, K, M	B, C, W	D	S	P, R	DAL,MSI,SOA

M55342^08@470#&	470	400 (char. E, H) or 800 (char. K, M)	E, H, K, M	B, C, W	G, J, M	S	P, R	DAL,MSI,SOA
M55342^08@475#&	475	400 (char. E, H) or 800 (char. K, M)	E, H, K, M	B, C, W	D	S	P, R	DAL,MSI,SOA
M55342^08@487#&	487	400 (char. E, H) or 800 (char. K, M)	E, H, K, M	B, C, W	D	S	P, R	DAL,MSI,SOA
M55342^08@499#&	499	400 (char. E, H) or 800 (char. K, M)	E, H, K, M	B, C, W	D	S	P, R	DAL,MSI,SOA
M55342^08@510#&	510	400 (char. E, H) or 800 (char. K, M)	E, H, K, M	B, C, W	G, J	S	P, R	DAL,MSI,SOA
M55342^08@511#&	511	400 (char. E, H) or 800 (char. K, M)	E, H, K, M	B, C, W	D	S	P, R	DAL,MSI,SOA
M55342^08@523#&	523	400 (char. E, H) or 800 (char. K, M)	E, H, K, M	B, C, W	D	S	P, R	DAL,MSI,SOA
M55342^08@536#&	536	400 (char. E, H) or 800 (char. K, M)	E, H, K, M	B, C, W	D	S	P, R	DAL,MSI,SOA
M55342^08@549#&	549	400 (char. E, H) or 800 (char. K, M)	E, H, K, M	B, C, W	D	S	P, R	DAL,MSI,SOA
M55342^08@560#&	560	400 (char. E, H) or 800 (char. K, M)	E, H, K, M	B, C, W	G, J, M	S	P, R	DAL,MSI,SOA
M55342^08@562#&	562	400 (char. E, H) or 800 (char. K, M)	E, H, K, M	B, C, W	D	S	P, R	DAL,MSI,SOA
M55342^08@576#&	576	400 (char. E, H) or 800 (char. K, M)	E, H, K, M	B, C, W	D	S	P, R	DAL,MSI,SOA
M55342^08@590#&	590	400 (char. E, H) or 800 (char. K, M)	E, H, K, M	B, C, W	D	S	P, R	DAL,MSI,SOA
M55342^08@604#&	604	400 (char. E, H) or 800 (char. K, M)	E, H, K, M	B, C, W	D	S	P, R	DAL,MSI,SOA
M55342^08@619#&	619	400 (char. E, H) or 800 (char. K, M)	E, H, K, M	B, C, W	D	S	P, R	DAL,MSI,SOA
M55342^08@620#&	620	400 (char. E, H) or 800 (char. K, M)	E, H, K, M	B, C, W	G, J	S	P, R	DAL,MSI,SOA
M55342^08@634#&	634	400 (char. E, H) or 800 (char. K, M)	E, H, K, M	B, C, W	D	S	P, R	DAL,MSI,SOA
M55342^08@649#&	649	400 (char. E, H) or 800 (char. K, M)	E, H, K, M	B, C, W	D	S	P, R	DAL,MSI,SOA
M55342^08@665#&	665	400 (char. E, H) or 800 (char. K, M)	E, H, K, M	B, C, W	D	S	P, R	DAL,MSI,SOA
M55342^08@680#&	680	400 (char. E, H) or 800 (char. K, M)	E, H, K, M	B, C, W	G, J, M	S	P, R	DAL,MSI,SOA
M55342^08@681#&	681	400 (char. E, H) or 800 (char. K, M)	E, H, K, M	B, C, W	D	S	P, R	DAL,MSI,SOA
M55342^08@698#&	698	400 (char. E, H) or 800 (char. K, M)	E, H, K, M	B, C, W	D	S	P, R	DAL,MSI,SOA
M55342^08@715#&	715	400 (char. E, H) or 800 (char. K, M)	E, H, K, M	B, C, W	D	S	P, R	DAL,MSI,SOA
M55342^08@732#&	732	400 (char. E, H) or 800 (char. K, M)	E, H, K, M	B, C, W	D	S	P, R	DAL,MSI,SOA
M55342^08@750#&	750	400 (char. E, H) or 800 (char. K, M)	E, H, K, M	B, C, W	D, G, J	S	P, R	DAL,MSI,SOA
M55342^08@768#&	768	400 (char. E, H) or 800 (char. K, M)	E, H, K, M	B, C, W	D	S	P, R	DAL,MSI,SOA
M55342^08@787#&	787	400 (char. E, H) or 800 (char. K, M)	E, H, K, M	B, C, W	D	S	P, R	DAL,MSI,SOA
M55342^08@806#&	806	400 (char. E, H) or 800 (char. K, M)	E, H, K, M	B, C, W	D	S	P, R	DAL,MSI,SOA
M55342^08@820#&	820	400 (char. E, H) or 800 (char. K, M)	E, H, K, M	B, C, W	G, J, M	S	P, R	DAL,MSI,SOA
M55342^08@825#&	825	400 (char. E, H) or 800 (char. K, M)	E, H, K, M	B, C, W	D	S	P, R	DAL,MSI,SOA
M55342^08@845#&	845	400 (char. E, H) or 800 (char. K, M)	E, H, K, M	B, C, W	D	S	P, R	DAL,MSI,SOA
M55342^08@866#&	866	400 (char. E, H) or 800 (char. K, M)	E, H, K, M	B, C, W	D	S	P, R	DAL,MSI,SOA
M55342^08@887#&	887	400 (char. E, H) or 800 (char. K, M)	E, H, K, M	B, C, W	D	S	P, R	DAL,MSI,SOA
M55342^08@909#&	909	400 (char. E, H) or 800 (char. K, M)	E, H, K, M	B, C, W	D	S	P, R	DAL,MSI,SOA
M55342^08@910#&	910	400 (char. E, H) or 800 (char. K, M)	E, H, K, M	B, C, W	G, J	S	P, R	DAL,MSI,SOA
M55342^08@931#&	931	400 (char. E, H) or 800 (char. K, M)	E, H, K, M	B, C, W	D	S	P, R	DAL,MSI,SOA
M55342^08@953#&	953	400 (char. E, H) or 800 (char. K, M)	E, H, K, M	B, C, W	D	S	P, R	DAL,MSI,SOA
M55342^08@976#&	976	400 (char. E, H) or 800 (char. K, M)	E, H, K, M	B, C, W	D	S	P, R	DAL,MSI,SOA
M55342^08@1#00&	1,000	400 (char. E, H) or 800 (char. K, M)	E, H, K, M	B, C, W	E, H, K, N	S	P, R	DAL,MSI,SOA
M55342^08@1#02&	1,020	400 (char. E, H) or 800 (char. K, M)	E, H, K, M	B, C, W	E	S	P, R	DAL,MSI,SOA
M55342^08@1#05&	1,050	400 (char. E, H) or 800 (char. K, M)	E, H, K, M	B, C, W	E	S	P, R	DAL,MSI,SOA
M55342^08@1#07&	1,070	400 (char. E, H) or 800 (char. K, M)	E, H, K, M	B, C, W	E	S	P, R	DAL,MSI,SOA
M55342^08@1#10&	1,100	400 (char. E, H) or 800 (char. K, M)	E, H, K, M	B, C, W	E, H, K	S	P, R	DAL,MSI,SOA
M55342^08@1#13&	1,130	400 (char. E, H) or 800 (char. K, M)	E, H, K, M	B, C, W	E	S	P, R	DAL,MSI,SOA
M55342^08@1#15&	1,150	400 (char. E, H) or 800 (char. K, M)	E, H, K, M	B, C, W	E	S	P, R	DAL,MSI,SOA
M55342^08@1#18&	1,180	400 (char. E, H) or 800 (char. K, M)	E, H, K, M	B, C, W	E	S	P, R	DAL,MSI,SOA
M55342^08@1#20&	1,200	400 (char. E, H) or 800 (char. K, M)	E, H, K, M	B, C, W	H, K, N	S	P, R	DAL,MSI,SOA

M55342^08@1#21&	1,210	400 (char. E, H) or 800 (char. K, M)	E, H, K, M	B, C, W	E	S	P, R	DAL,MSI,SOA
M55342^08@1#24&	1,240	400 (char. E, H) or 800 (char. K, M)	E, H, K, M	B, C, W	E	S	P, R	DAL,MSI,SOA
M55342^08@1#27&	1,270	400 (char. E, H) or 800 (char. K, M)	E, H, K, M	B, C, W	E	S	P, R	DAL,MSI,SOA
M55342^08@1#30&	1,300	400 (char. E, H) or 800 (char. K, M)	E, H, K, M	B, C, W	E, H, K	S	P, R	DAL,MSI,SOA
M55342^08@1#33&	1,330	400 (char. E, H) or 800 (char. K, M)	E, H, K, M	B, C, W	E	S	P, R	DAL,MSI,SOA
M55342^08@1#37&	1,370	400 (char. E, H) or 800 (char. K, M)	E, H, K, M	B, C, W	E	S	P, R	DAL,MSI,SOA
M55342^08@1#40&	1,400	400 (char. E, H) or 800 (char. K, M)	E, H, K, M	B, C, W	E	S	P, R	DAL,MSI,SOA
M55342^08@1#43&	1,430	400 (char. E, H) or 800 (char. K, M)	E, H, K, M	B, C, W	E	S	P, R	DAL,MSI,SOA
M55342^08@1#47&	1,470	400 (char. E, H) or 800 (char. K, M)	E, H, K, M	B, C, W	E	S	P, R	DAL,MSI,SOA
M55342^08@1#50&	1,500	400 (char. E, H) or 800 (char. K, M)	E, H, K, M	B, C, W	E, H, K, N	S	P, R	DAL,MSI,SOA
M55342^08@1#54&	1,540	400 (char. E, H) or 800 (char. K, M)	E, H, K, M	B, C, W	E	S	P, R	DAL,MSI,SOA
M55342^08@1#58&	1,580	400 (char. E, H) or 800 (char. K, M)	E, H, K, M	B, C, W	E	S	P, R	DAL,MSI,SOA
M55342^08@1#60&	1,600	400 (char. E, H) or 800 (char. K, M)	E, H, K, M	B, C, W	H, K	S	P, R	DAL,MSI,SOA
M55342^08@1#62&	1,620	400 (char. E, H) or 800 (char. K, M)	E, H, K, M	B, C, W	E	S	P, R	DAL,MSI,SOA
M55342^08@1#65&	1,650	400 (char. E, H) or 800 (char. K, M)	E, H, K, M	B, C, W	E	S	P, R	DAL,MSI,SOA
M55342^08@1#69&	1,690	400 (char. E, H) or 800 (char. K, M)	E, H, K, M	B, C, W	E	S	P, R	DAL,MSI,SOA
M55342^08@1#74&	1,740	400 (char. E, H) or 800 (char. K, M)	E, H, K, M	B, C, W	E	S	P, R	DAL,MSI,SOA
M55342^08@1#78&	1,780	400 (char. E, H) or 800 (char. K, M)	E, H, K, M	B, C, W	E	S	P, R	DAL,MSI,SOA
M55342^08@1#80&	1,800	400 (char. E, H) or 800 (char. K, M)	E, H, K, M	B, C, W	H, K, N	S	P, R	DAL,MSI,SOA
M55342^08@1#82&	1,820	400 (char. E, H) or 800 (char. K, M)	E, H, K, M	B, C, W	E	S	P, R	DAL,MSI,SOA
M55342^08@1#87&	1,870	400 (char. E, H) or 800 (char. K, M)	E, H, K, M	B, C, W	E	S	P, R	DAL,MSI,SOA
M55342^08@1#91&	1,910	400 (char. E, H) or 800 (char. K, M)	E, H, K, M	B, C, W	E	S	P, R	DAL,MSI,SOA
M55342^08@1#96&	1,960	400 (char. E, H) or 800 (char. K, M)	E, H, K, M	B, C, W	E	S	P, R	DAL,MSI,SOA
M55342^08@2#00&	2,000	400 (char. E, H) or 800 (char. K, M)	E, H, K, M	B, C, W	E, H, K, N	S	P, R	DAL,MSI,SOA
M55342^08@2#05&	2,050	400 (char. E, H) or 800 (char. K, M)	E, H, K, M	B, C, W	E	S	P, R	DAL,MSI,SOA
M55342^08@2#10&	2,100	400 (char. E, H) or 800 (char. K, M)	E, H, K, M	B, C, W	E	S	P, R	DAL,MSI,SOA
M55342^08@2#15&	2,150	400 (char. E, H) or 800 (char. K, M)	E, H, K, M	B, C, W	E	S	P, R	DAL,MSI,SOA
M55342^08@2#20&	2,200	400 (char. E, H) or 800 (char. K, M)	E, H, K, M	B, C, W	H, K, N	S	P, R	DAL,MSI,SOA
M55342^08@2#21&	2,210	400 (char. E, H) or 800 (char. K, M)	E, H, K, M	B, C, W	E	S	P, R	DAL,MSI,SOA
M55342^08@2#26&	2,260	400 (char. E, H) or 800 (char. K, M)	E, H, K, M	B, C, W	E	S	P, R	DAL,MSI,SOA
M55342^08@2#32&	2,320	400 (char. E, H) or 800 (char. K, M)	E, H, K, M	B, C, W	E	S	P, R	DAL,MSI,SOA
M55342^08@2#37&	2,370	400 (char. E, H) or 800 (char. K, M)	E, H, K, M	B, C, W	E	S	P, R	DAL,MSI,SOA
M55342^08@2#40&	2,400	400 (char. E, H) or 800 (char. K, M)	E, H, K, M	B, C, W	H, K	S	P, R	DAL,MSI,SOA
M55342^08@2#43&	2,430	400 (char. E, H) or 800 (char. K, M)	E, H, K, M	B, C, W	E	S	P, R	DAL,MSI,SOA
M55342^08@2#49&	2,490	400 (char. E, H) or 800 (char. K, M)	E, H, K, M	B, C, W	E	S	P, R	DAL,MSI,SOA
M55342^08@2#55&	2,550	400 (char. E, H) or 800 (char. K, M)	E, H, K, M	B, C, W	E	S	P, R	DAL,MSI,SOA
M55342^08@2#61&	2,610	400 (char. E, H) or 800 (char. K, M)	E, H, K, M	B, C, W	E	S	P, R	DAL,MSI,SOA
M55342^08@2#67&	2,670	400 (char. E, H) or 800 (char. K, M)	E, H, K, M	B, C, W	E	S	P, R	DAL,MSI,SOA
M55342^08@2#70&	2,700	400 (char. E, H) or 800 (char. K, M)	E, H, K, M	B, C, W	H, K, N	S	P, R	DAL,MSI,SOA
M55342^08@2#74&	2,740	400 (char. E, H) or 800 (char. K, M)	E, H, K, M	B, C, W	E	S	P, R	DAL,MSI,SOA
M55342^08@2#80&	2,800	400 (char. E, H) or 800 (char. K, M)	E, H, K, M	B, C, W	E	S	P, R	DAL,MSI,SOA
M55342^08@2#87&	2,870	400 (char. E, H) or 800 (char. K, M)	E, H, K, M	B, C, W	E	S	P, R	DAL,MSI,SOA
M55342^08@2#94&	2,940	400 (char. E, H) or 800 (char. K, M)	E, H, K, M	B, C, W	E	S	P, R	DAL,MSI,SOA
M55342^08@3#00&	3,000	400 (char. E, H) or 800 (char. K, M)	E, H, K, M	B, C, W	H, K	S	P, R	DAL,MSI,SOA
M55342^08@3#01&	3,010	400 (char. E, H) or 800 (char. K, M)	E, H, K, M	B, C, W	E	S	P, R	DAL,MSI,SOA
M55342^08@3#09&	3,090	400 (char. E, H) or 800 (char. K, M)	E, H, K, M	B, C, W	E	S	P, R	DAL,MSI,SOA
M55342^08@3#16&	3,160	400 (char. E, H) or 800 (char. K, M)	E, H, K, M	B, C, W	E	S	P, R	DAL,MSI,SOA

M55342^08@3#24&	3,240	400 (char. E, H) or 800 (char. K, M)	E, H, K, M	B, C, W	E	S	P, R	DAL,MSI,SOA
M55342^08@3#30&	3,300	400 (char. E, H) or 800 (char. K, M)	E, H, K, M	B, C, W	H, K, N	S	P, R	DAL,MSI,SOA
M55342^08@3#32&	3,320	400 (char. E, H) or 800 (char. K, M)	E, H, K, M	B, C, W	E	S	P, R	DAL,MSI,SOA
M55342^08@3#40&	3,400	400 (char. E, H) or 800 (char. K, M)	E, H, K, M	B, C, W	E	S	P, R	DAL,MSI,SOA
M55342^08@3#48&	3,480	400 (char. E, H) or 800 (char. K, M)	E, H, K, M	B, C, W	E	S	P, R	DAL,MSI,SOA
M55342^08@3#57&	3,570	400 (char. E, H) or 800 (char. K, M)	E, H, K, M	B, C, W	E	S	P, R	DAL,MSI,SOA
M55342^08@3#60&	3,600	400 (char. E, H) or 800 (char. K, M)	E, H, K, M	B, C, W	H, K	S	P, R	DAL,MSI,SOA
M55342^08@3#65&	3,650	400 (char. E, H) or 800 (char. K, M)	E, H, K, M	B, C, W	E	S	P, R	DAL,MSI,SOA
M55342^08@3#74&	3,740	400 (char. E, H) or 800 (char. K, M)	E, H, K, M	B, C, W	E	S	P, R	DAL,MSI,SOA
M55342^08@3#83&	3,830	400 (char. E, H) or 800 (char. K, M)	E, H, K, M	B, C, W	E	S	P, R	DAL,MSI,SOA
M55342^08@3#90&	3,900	400 (char. E, H) or 800 (char. K, M)	E, H, K, M	B, C, W	H, K, N	S	P, R	DAL,MSI,SOA
M55342^08@3#92&	3,920	400 (char. E, H) or 800 (char. K, M)	E, H, K, M	B, C, W	E	S	P, R	DAL,MSI,SOA
M55342^08@4#02&	4,020	400 (char. E, H) or 800 (char. K, M)	E, H, K, M	B, C, W	E	S	P, R	DAL,MSI,SOA
M55342^08@4#12&	4,120	400 (char. E, H) or 800 (char. K, M)	E, H, K, M	B, C, W	E	S	P, R	DAL,MSI,SOA
M55342^08@4#22&	4,220	400 (char. E, H) or 800 (char. K, M)	E, H, K, M	B, C, W	E	S	P, R	DAL,MSI,SOA
M55342^08@4#30&	4,300	400 (char. E, H) or 800 (char. K, M)	E, H, K, M	B, C, W	H, K	S	P, R	DAL,MSI,SOA
M55342^08@4#32&	4,320	400 (char. E, H) or 800 (char. K, M)	E, H, K, M	B, C, W	E	S	P, R	DAL,MSI,SOA
M55342^08@4#42&	4,420	400 (char. E, H) or 800 (char. K, M)	E, H, K, M	B, C, W	E	S	P, R	DAL,MSI,SOA
M55342^08@4#53&	4,530	400 (char. E, H) or 800 (char. K, M)	E, H, K, M	B, C, W	E	S	P, R	DAL,MSI,SOA
M55342^08@4#64&	4,640	400 (char. E, H) or 800 (char. K, M)	E, H, K, M	B, C, W	E	S	P, R	DAL,MSI,SOA
M55342^08@4#70&	4,700	400 (char. E, H) or 800 (char. K, M)	E, H, K, M	B, C, W	H, K, N	S	P, R	DAL,MSI,SOA
M55342^08@4#75&	4,750	400 (char. E, H) or 800 (char. K, M)	E, H, K, M	B, C, W	E	S	P, R	DAL,MSI,SOA
M55342^08@4#87&	4,870	400 (char. E, H) or 800 (char. K, M)	E, H, K, M	B, C, W	E	S	P, R	DAL,MSI,SOA
M55342^08@4#99&	4,990	400 (char. E, H) or 800 (char. K, M)	E, H, K, M	B, C, W	E	S	P, R	DAL,MSI,SOA
M55342^08@5#10&	5,100	400 (char. E, H) or 800 (char. K, M)	E, H, K, M	B, C, W	H, K	S	P, R	DAL,MSI,SOA
M55342^08@5#11&	5,110	400 (char. E, H) or 800 (char. K, M)	E, H, K, M	B, C, W	E	S	P, R	DAL,MSI,SOA
M55342^08@5#23&	5,230	400 (char. E, H) or 800 (char. K, M)	E, H, K, M	B, C, W	E	S	P, R	DAL,MSI,SOA
M55342^08@5#36&	5,360	400 (char. E, H) or 800 (char. K, M)	E, H, K, M	B, C, W	E	S	P, R	DAL,MSI,SOA
M55342^08@5#49&	5,490	400 (char. E, H) or 800 (char. K, M)	E, H, K, M	B, C, W	E	S	P, R	DAL,MSI,SOA
M55342^08@5#60&	5,600	400 (char. E, H) or 800 (char. K, M)	E, H, K, M	B, C, W	H, K, N	S	P, R	DAL,MSI,SOA
M55342^08@5#62&	5,620	400 (char. E, H) or 800 (char. K, M)	E, H, K, M	B, C, W	E	S	P, R	DAL,MSI,SOA
M55342^08@5#76&	5,760	400 (char. E, H) or 800 (char. K, M)	E, H, K, M	B, C, W	E	S	P, R	DAL,MSI,SOA
M55342^08@5#90&	5,900	400 (char. E, H) or 800 (char. K, M)	E, H, K, M	B, C, W	E	S	P, R	DAL,MSI,SOA
M55342^08@6#04&	6,040	400 (char. E, H) or 800 (char. K, M)	E, H, K, M	B, C, W	E	S	P, R	DAL,MSI,SOA
M55342^08@6#19&	6,190	400 (char. E, H) or 800 (char. K, M)	E, H, K, M	B, C, W	E	S	P, R	DAL,MSI,SOA
M55342^08@6#20&	6,200	400 (char. E, H) or 800 (char. K, M)	E, H, K, M	B, C, W	H, K	S	P, R	DAL,MSI,SOA
M55342^08@6#34&	6,340	400 (char. E, H) or 800 (char. K, M)	E, H, K, M	B, C, W	E	S	P, R	DAL,MSI,SOA
M55342^08@6#49&	6,490	400 (char. E, H) or 800 (char. K, M)	E, H, K, M	B, C, W	E	S	P, R	DAL,MSI,SOA
M55342^08@6#65&	6,650	400 (char. E, H) or 800 (char. K, M)	E, H, K, M	B, C, W	E	S	P, R	DAL,MSI,SOA
M55342^08@6#80&	6,800	400 (char. E, H) or 800 (char. K, M)	E, H, K, M	B, C, W	H, K, N	S	P, R	DAL,MSI,SOA
M55342^08@6#81&	6,810	400 (char. E, H) or 800 (char. K, M)	E, H, K, M	B, C, W	E	S	P, R	DAL,MSI,SOA
M55342^08@6#98&	6,980	400 (char. E, H) or 800 (char. K, M)	E, H, K, M	B, C, W	E	S	P, R	DAL,MSI,SOA
M55342^08@7#15&	7,150	400 (char. E, H) or 800 (char. K, M)	E, H, K, M	B, C, W	E	S	P, R	DAL,MSI,SOA
M55342^08@7#32&	7,320	400 (char. E, H) or 800 (char. K, M)	E, H, K, M	B, C, W	E	S	P, R	DAL,MSI,SOA
M55342^08@7#50&	7,500	400 (char. E, H) or 800 (char. K, M)	E, H, K, M	B, C, W	E, H, K	S	P, R	DAL,MSI,SOA
M55342^08@7#68&	7,680	400 (char. E, H) or 800 (char. K, M)	E, H, K, M	B, C, W	E	S	P, R	DAL,MSI,SOA
M55342^08@7#87&	7,870	400 (char. E, H) or 800 (char. K, M)	E, H, K, M	B, C, W	E	S	P, R	DAL,MSI,SOA

M55342^08@8#06&	8,060	400 (char. E, H) or 800 (char. K, M)	E, H, K, M	B, C, W	E	S	P, R	DAL,MSI,SOA
M55342^08@8#20&	8,200	400 (char. E, H) or 800 (char. K, M)	E, H, K, M	B, C, W	H, K, N	S	P, R	DAL,MSI,SOA
M55342^08@8#25&	8,250	400 (char. E, H) or 800 (char. K, M)	E, H, K, M	B, C, W	E	S	P, R	DAL,MSI,SOA
M55342^08@8#45&	8,450	400 (char. E, H) or 800 (char. K, M)	E, H, K, M	B, C, W	E	S	P, R	DAL,MSI,SOA
M55342^08@8#66&	8,660	400 (char. E, H) or 800 (char. K, M)	E, H, K, M	B, C, W	E	S	P, R	DAL,MSI,SOA
M55342^08@8#87&	8,870	400 (char. E, H) or 800 (char. K, M)	E, H, K, M	B, C, W	E	S	P, R	DAL,MSI,SOA
M55342^08@9#09&	9,090	400 (char. E, H) or 800 (char. K, M)	E, H, K, M	B, C, W	E	S	P, R	DAL,MSI,SOA
M55342^08@9#10&	9,100	400 (char. E, H) or 800 (char. K, M)	E, H, K, M	B, C, W	H, K	S	P, R	DAL,MSI,SOA
M55342^08@9#31&	9,310	400 (char. E, H) or 800 (char. K, M)	E, H, K, M	B, C, W	E	S	P, R	DAL,MSI,SOA
M55342^08@9#53&	9,530	400 (char. E, H) or 800 (char. K, M)	E, H, K, M	B, C, W	E	S	P, R	DAL,MSI,SOA
M55342^08@9#76&	9,760	400 (char. E, H) or 800 (char. K, M)	E, H, K, M	B, C, W	E	S	P, R	DAL,MSI,SOA
M55342^08@10#0&	10,000	400 (char. E, H) or 800 (char. K, M)	E, H, K, M	B, C, W	E, H, K, N	S	P, R	DAL,MSI,SOA
M55342^08@10#2&	10,200	400 (char. E, H) or 800 (char. K, M)	E, H, K, M	B, C, W	E	S	P, R	DAL,MSI,SOA
M55342^08@10#5&	10,500	400 (char. E, H) or 800 (char. K, M)	E, H, K, M	B, C, W	E	S	P, R	DAL,MSI,SOA
M55342^08@10#7&	10,700	400 (char. E, H) or 800 (char. K, M)	E, H, K, M	B, C, W	E	S	P, R	DAL,MSI,SOA
M55342^08@11#0&	11,000	400 (char. E, H) or 800 (char. K, M)	E, H, K, M	B, C, W	E, H, K	S	P, R	DAL,MSI,SOA
M55342^08@11#3&	11,300	400 (char. E, H) or 800 (char. K, M)	E, H, K, M	B, C, W	E	S	P, R	DAL,MSI,SOA
M55342^08@11#5&	11,500	400 (char. E, H) or 800 (char. K, M)	E, H, K, M	B, C, W	E	S	P, R	DAL,MSI,SOA
M55342^08@11#8&	11,800	400 (char. E, H) or 800 (char. K, M)	E, H, K, M	B, C, W	E	S	P, R	DAL,MSI,SOA
M55342^08@12#0&	12,000	400 (char. E, H) or 800 (char. K, M)	E, H, K, M	B, C, W	H, K, N	S	P, R	DAL,MSI,SOA
M55342^08@12#1&	12,100	400 (char. E, H) or 800 (char. K, M)	E, H, K, M	B, C, W	E	S	P, R	DAL,MSI,SOA
M55342^08@12#4&	12,400	400 (char. E, H) or 800 (char. K, M)	E, H, K, M	B, C, W	E	S	P, R	DAL,MSI,SOA
M55342^08@12#7&	12,700	400 (char. E, H) or 800 (char. K, M)	E, H, K, M	B, C, W	E	S	P, R	DAL,MSI,SOA
M55342^08@13#0&	13,000	400 (char. E, H) or 800 (char. K, M)	E, H, K, M	B, C, W	E, H, K	S	P, R	DAL,MSI,SOA
M55342^08@13#3&	13,300	400 (char. E, H) or 800 (char. K, M)	E, H, K, M	B, C, W	E	S	P, R	DAL,MSI,SOA
M55342^08@13#7&	13,700	400 (char. E, H) or 800 (char. K, M)	E, H, K, M	B, C, W	E	S	P, R	DAL,MSI,SOA
M55342^08@14#0&	14,000	400 (char. E, H) or 800 (char. K, M)	E, H, K, M	B, C, W	E	S	P, R	DAL,MSI,SOA
M55342^08@14#3&	14,300	400 (char. E, H) or 800 (char. K, M)	E, H, K, M	B, C, W	E	S	P, R	DAL,MSI,SOA
M55342^08@14#7&	14,700	400 (char. E, H) or 800 (char. K, M)	E, H, K, M	B, C, W	E	S	P, R	DAL,MSI,SOA
M55342^08@15#0&	15,000	400 (char. E, H) or 800 (char. K, M)	E, H, K, M	B, C, W	E, H, K, N	S	P, R	DAL,MSI,SOA
M55342^08@15#4&	15,400	400 (char. E, H) or 800 (char. K, M)	E, H, K, M	B, C, W	E	S	P, R	DAL,MSI,SOA
M55342^08@15#8&	15,800	400 (char. E, H) or 800 (char. K, M)	E, H, K, M	B, C, W	E	S	P, R	DAL,MSI,SOA
M55342^08@16#0&	16,000	400 (char. E, H) or 800 (char. K, M)	E, H, K, M	B, C, W	H, K	S	P, R	DAL,MSI,SOA
M55342^08@16#2&	16,200	400 (char. E, H) or 800 (char. K, M)	E, H, K, M	B, C, W	E	S	P, R	DAL,MSI,SOA
M55342^08@16#5&	16,500	400 (char. E, H) or 800 (char. K, M)	E, H, K, M	B, C, W	E	S	P, R	DAL,MSI,SOA
M55342^08@16#9&	16,900	400 (char. E, H) or 800 (char. K, M)	E, H, K, M	B, C, W	E	S	P, R	DAL,MSI,SOA
M55342^08@17#4&	17,400	400 (char. E, H) or 800 (char. K, M)	E, H, K, M	B, C, W	E	S	P, R	DAL,MSI,SOA
M55342^08@17#8&	17,800	400 (char. E, H) or 800 (char. K, M)	E, H, K, M	B, C, W	E	S	P, R	DAL,MSI,SOA
M55342^08@18#0&	18,000	400 (char. E, H) or 800 (char. K, M)	E, H, K, M	B, C, W	H, K, N	S	P, R	DAL,MSI,SOA
M55342^08@18#2&	18,200	400 (char. E, H) or 800 (char. K, M)	E, H, K, M	B, C, W	E	S	P, R	DAL,MSI,SOA
M55342^08@18#7&	18,700	400 (char. E, H) or 800 (char. K, M)	E, H, K, M	B, C, W	E	S	P, R	DAL,MSI,SOA
M55342^08@19#1&	19,100	400 (char. E, H) or 800 (char. K, M)	E, H, K, M	B, C, W	E	S	P, R	DAL,MSI,SOA
M55342^08@19#6&	19,600	400 (char. E, H) or 800 (char. K, M)	E, H, K, M	B, C, W	E	S	P, R	DAL,MSI,SOA
M55342^08@20#0&	20,000	400 (char. E, H) or 800 (char. K, M)	E, H, K, M	B, C, W	E, H, K, N	S	P, R	DAL,MSI,SOA
M55342^08@20#5&	20,500	400 (char. E, H) or 800 (char. K, M)	E, H, K, M	B, C, W	E	S	P, R	DAL,MSI,SOA
M55342^08@21#0&	21,000	400 (char. E, H) or 800 (char. K, M)	E, H, K, M	B, C, W	E	S	P, R	DAL,MSI,SOA
M55342^08@21#5&	21,500	400 (char. E, H) or 800 (char. K, M)	E, H, K, M	B, C, W	E	S	P, R	DAL,MSI,SOA

M55342^08@22#0&	22,000	400 (char. E, H) or 800 (char. K, M)	E, H, K, M	B, C, W	H, K, N	S	P, R	DAL,MSI,SOA
M55342^08@22#1&	22,100	400 (char. E, H) or 800 (char. K, M)	E, H, K, M	B, C, W	E	S	P, R	DAL,MSI,SOA
M55342^08@22#6&	22,600	400 (char. E, H) or 800 (char. K, M)	E, H, K, M	B, C, W	E	S	P, R	DAL,MSI,SOA
M55342^08@23#2&	23,200	400 (char. E, H) or 800 (char. K, M)	E, H, K, M	B, C, W	E	S	P, R	DAL,MSI,SOA
M55342^08@23#7&	23,700	400 (char. E, H) or 800 (char. K, M)	E, H, K, M	B, C, W	E	S	P, R	DAL,MSI,SOA
M55342^08@24#0&	24,000	400 (char. E, H) or 800 (char. K, M)	E, H, K, M	B, C, W	H, K	S	P, R	DAL,MSI,SOA
M55342^08@24#3&	24,300	400 (char. E, H) or 800 (char. K, M)	E, H, K, M	B, C, W	E	S	P, R	DAL,MSI,SOA
M55342^08@24#9&	24,900	400 (char. E, H) or 800 (char. K, M)	E, H, K, M	B, C, W	E	S	P, R	DAL,MSI,SOA
M55342^08@25#5&	25,500	400 (char. E, H) or 800 (char. K, M)	E, H, K, M	B, C, W	E	S	P, R	DAL,MSI,SOA
M55342^08@26#1&	26,100	400 (char. E, H) or 800 (char. K, M)	E, H, K, M	B, C, W	E	S	P, R	DAL,MSI,SOA
M55342^08@26#7&	26,700	400 (char. E, H) or 800 (char. K, M)	E, H, K, M	B, C, W	E	S	P, R	DAL,MSI,SOA
M55342^08@27#0&	27,000	400 (char. E, H) or 800 (char. K, M)	E, H, K, M	B, C, W	H, K, N	S	P, R	DAL,MSI,SOA
M55342^08@27#4&	27,400	400 (char. E, H) or 800 (char. K, M)	E, H, K, M	B, C, W	E	S	P, R	DAL,MSI,SOA
M55342^08@28#0&	28,000	400 (char. E, H) or 800 (char. K, M)	E, H, K, M	B, C, W	E	S	P, R	DAL,MSI,SOA
M55342^08@28#7&	28,700	400 (char. E, H) or 800 (char. K, M)	E, H, K, M	B, C, W	E	S	P, R	DAL,MSI,SOA
M55342^08@29#4&	29,400	400 (char. E, H) or 800 (char. K, M)	E, H, K, M	B, C, W	E	S	P, R	DAL,MSI,SOA
M55342^08@30#0&	30,000	400 (char. E, H) or 800 (char. K, M)	E, H, K, M	B, C, W	H, K	S	P, R	DAL,MSI,SOA
M55342^08@30#1&	30,100	400 (char. E, H) or 800 (char. K, M)	E, H, K, M	B, C, W	E	S	P, R	DAL,MSI,SOA
M55342^08@30#9&	30,900	400 (char. E, H) or 800 (char. K, M)	E, H, K, M	B, C, W	E	S	P, R	DAL,MSI,SOA
M55342^08@31#6&	31,600	400 (char. E, H) or 800 (char. K, M)	E, H, K, M	B, C, W	E	S	P, R	DAL,MSI,SOA
M55342^08@32#4&	32,400	400 (char. E, H) or 800 (char. K, M)	E, H, K, M	B, C, W	E	S	P, R	DAL,MSI,SOA
M55342^08@33#0&	33,000	400 (char. E, H) or 800 (char. K, M)	E, H, K, M	B, C, W	H, K, N	S	P, R	DAL,MSI,SOA
M55342^08@33#2&	33,200	400 (char. E, H) or 800 (char. K, M)	E, H, K, M	B, C, W	E	S	P, R	DAL,MSI,SOA
M55342^08@34#0&	34,000	400 (char. E, H) or 800 (char. K, M)	E, H, K, M	B, C, W	E	S	P, R	DAL,MSI,SOA
M55342^08@34#8&	34,800	400 (char. E, H) or 800 (char. K, M)	E, H, K, M	B, C, W	E	S	P, R	DAL,MSI,SOA
M55342^08@35#7&	35,700	400 (char. E, H) or 800 (char. K, M)	E, H, K, M	B, C, W	E	S	P, R	DAL,MSI,SOA
M55342^08@36#0&	36,000	400 (char. E, H) or 800 (char. K, M)	E, H, K, M	B, C, W	H, K	S	P, R	DAL,MSI,SOA
M55342^08@36#5&	36,500	400 (char. E, H) or 800 (char. K, M)	E, H, K, M	B, C, W	E	S	P, R	DAL,MSI,SOA
M55342^08@37#4&	37,400	400 (char. E, H) or 800 (char. K, M)	E, H, K, M	B, C, W	E	S	P, R	DAL,MSI,SOA
M55342^08@38#3&	38,300	400 (char. E, H) or 800 (char. K, M)	E, H, K, M	B, C, W	E	S	P, R	DAL,MSI,SOA
M55342^08@39#0&	39,000	400 (char. E, H) or 800 (char. K, M)	E, H, K, M	B, C, W	H, K, N	S	P, R	DAL,MSI,SOA
M55342^08@39#2&	39,200	400 (char. E, H) or 800 (char. K, M)	E, H, K, M	B, C, W	E	S	P, R	DAL,MSI,SOA
M55342^08@40#2&	40,200	400 (char. E, H) or 800 (char. K, M)	E, H, K, M	B, C, W	E	S	P, R	DAL,MSI,SOA
M55342^08@41#2&	41,200	400 (char. E, H) or 800 (char. K, M)	E, H, K, M	B, C, W	E	S	P, R	DAL,MSI,SOA
M55342^08@42#2&	42,200	400 (char. E, H) or 800 (char. K, M)	E, H, K, M	B, C, W	E	S	P, R	DAL,MSI,SOA
M55342^08@43#0&	43,000	400 (char. E, H) or 800 (char. K, M)	E, H, K, M	B, C, W	H, K	S	P, R	DAL,MSI,SOA
M55342^08@43#2&	43,200	400 (char. E, H) or 800 (char. K, M)	E, H, K, M	B, C, W	E	S	P, R	DAL,MSI,SOA
M55342^08@44#2&	44,200	400 (char. E, H) or 800 (char. K, M)	E, H, K, M	B, C, W	E	S	P, R	DAL,MSI,SOA
M55342^08@45#3&	45,300	400 (char. E, H) or 800 (char. K, M)	E, H, K, M	B, C, W	E	S	P, R	DAL,MSI,SOA
M55342^08@46#4&	46,400	400 (char. E, H) or 800 (char. K, M)	E, H, K, M	B, C, W	E	S	P, R	DAL,MSI,SOA
M55342^08@47#0&	47,000	400 (char. E, H) or 800 (char. K, M)	E, H, K, M	B, C, W	H, K, N	S	P, R	DAL,MSI,SOA
M55342^08@47#5&	47,500	400 (char. E, H) or 800 (char. K, M)	E, H, K, M	B, C, W	E	S	P, R	DAL,MSI,SOA
M55342^08@48#7&	48,700	400 (char. E, H) or 800 (char. K, M)	E, H, K, M	B, C, W	E	S	P, R	DAL,MSI,SOA
M55342^08@49#9&	49,900	400 (char. E, H) or 800 (char. K, M)	E, H, K, M	B, C, W	E	S	P, R	DAL,MSI,SOA
M55342^08@51#0&	51,000	400 (char. E, H) or 800 (char. K, M)	E, H, K, M	B, C, W	H, K	S	P, R	DAL,MSI,SOA
M55342^08@51#1&	51,100	400 (char. E, H) or 800 (char. K, M)	E, H, K, M	B, C, W	E	S	P, R	DAL,MSI,SOA
M55342^08@52#3&	52,300	400 (char. E, H) or 800 (char. K, M)	E, H, K, M	B, C, W	E	S	P, R	DAL,MSI,SOA

M55342^08@53#6&	53,600	400 (char. E, H) or 800 (char. K, M)	E, H, K, M	B, C, W	E	S	P, R	DAL,MSI,SOA
M55342^08@54#9&	54,900	400 (char. E, H) or 800 (char. K, M)	E, H, K, M	B, C, W	E	S	P, R	DAL,MSI,SOA
M55342^08@56#0&	56,000	400 (char. E, H) or 800 (char. K, M)	E, H, K, M	B, C, W	H, K, N	S	P, R	DAL,MSI,SOA
M55342^08@56#2&	56,200	400 (char. E, H) or 800 (char. K, M)	E, H, K, M	B, C, W	E	S	P, R	DAL,MSI,SOA
M55342^08@57#6&	57,600	400 (char. E, H) or 800 (char. K, M)	E, H, K, M	B, C, W	E	S	P, R	DAL,MSI,SOA
M55342^08@59#0&	59,000	400 (char. E, H) or 800 (char. K, M)	E, H, K, M	B, C, W	E	S	P, R	DAL,MSI,SOA
M55342^08@60#4&	60,400	400 (char. E, H) or 800 (char. K, M)	E, H, K, M	B, C, W	E	S	P, R	DAL,MSI,SOA
M55342^08@61#9&	61,900	400 (char. E, H) or 800 (char. K, M)	E, H, K, M	B, C, W	E	S	P, R	DAL,MSI,SOA
M55342^08@62#0&	62,000	400 (char. E, H) or 800 (char. K, M)	E, H, K, M	B, C, W	H, K	S	P, R	DAL,MSI,SOA
M55342^08@63#4&	63,400	400 (char. E, H) or 800 (char. K, M)	E, H, K, M	B, C, W	E	S	P, R	DAL,MSI,SOA
M55342^08@64#9&	64,900	400 (char. E, H) or 800 (char. K, M)	E, H, K, M	B, C, W	E	S	P, R	DAL,MSI,SOA
M55342^08@66#5&	66,500	400 (char. E, H) or 800 (char. K, M)	E, H, K, M	B, C, W	E	S	P, R	DAL,MSI,SOA
M55342^08@68#0&	68,000	400 (char. E, H) or 800 (char. K, M)	E, H, K, M	B, C, W	H, K, N	S	P, R	DAL,MSI,SOA
M55342^08@68#1&	68,100	400 (char. E, H) or 800 (char. K, M)	E, H, K, M	B, C, W	E	S	P, R	DAL,MSI,SOA
M55342^08@69#8&	69,800	400 (char. E, H) or 800 (char. K, M)	E, H, K, M	B, C, W	E	S	P, R	DAL,MSI,SOA
M55342^08@71#5&	71,500	400 (char. E, H) or 800 (char. K, M)	E, H, K, M	B, C, W	E	S	P, R	DAL,MSI,SOA
M55342^08@73#2&	73,200	400 (char. E, H) or 800 (char. K, M)	E, H, K, M	B, C, W	E	S	P, R	DAL,MSI,SOA
M55342^08@75#0&	75,000	400 (char. E, H) or 800 (char. K, M)	E, H, K, M	B, C, W	E, H, K	S	P, R	DAL,MSI,SOA
M55342^08@76#8&	76,800	400 (char. E, H) or 800 (char. K, M)	E, H, K, M	B, C, W	E	S	P, R	DAL,MSI,SOA
M55342^08@78#7&	78,700	400 (char. E, H) or 800 (char. K, M)	E, H, K, M	B, C, W	E	S	P, R	DAL,MSI,SOA
M55342^08@80#6&	80,600	400 (char. E, H) or 800 (char. K, M)	E, H, K, M	B, C, W	E	S	P, R	DAL,MSI,SOA
M55342^08@82#0&	82,000	400 (char. E, H) or 800 (char. K, M)	E, H, K, M	B, C, W	H, K, N	S	P, R	DAL,MSI,SOA
M55342^08@82#5&	82,500	400 (char. E, H) or 800 (char. K, M)	E, H, K, M	B, C, W	E	S	P, R	DAL,MSI,SOA
M55342^08@84#5&	84,500	400 (char. E, H) or 800 (char. K, M)	E, H, K, M	B, C, W	E	S	P, R	DAL,MSI,SOA
M55342^08@86#6&	86,600	400 (char. E, H) or 800 (char. K, M)	E, H, K, M	B, C, W	E	S	P, R	DAL,MSI,SOA
M55342^08@88#7&	88,700	400 (char. E, H) or 800 (char. K, M)	E, H, K, M	B, C, W	E	S	P, R	DAL,MSI,SOA
M55342^08@90#9&	90,900	400 (char. E, H) or 800 (char. K, M)	E, H, K, M	B, C, W	E	S	P, R	DAL,MSI,SOA
M55342^08@91#0&	91,000	400 (char. E, H) or 800 (char. K, M)	E, H, K, M	B, C, W	H, K	S	P, R	DAL,MSI,SOA
M55342^08@93#1&	93,100	400 (char. E, H) or 800 (char. K, M)	E, H, K, M	B, C, W	E	S	P, R	DAL,MSI,SOA
M55342^08@95#3&	95,300	400 (char. E, H) or 800 (char. K, M)	E, H, K, M	B, C, W	E	S	P, R	DAL,MSI,SOA
M55342^08@97#6&	97,600	400 (char. E, H) or 800 (char. K, M)	E, H, K, M	B, C, W	E	S	P, R	DAL,MSI,SOA
M55342^08@10#0&	100,000	400 (char. E, H) or 800 (char. K, M)	E, H, K, M	B, C, W	E, H, K, N	S	P, R	DAL,MSI,SOA
M55342^08@10#2&	102,000	400 (char. E, H) or 800 (char. K, M)	E, H, K, M	B, C, W	E	S	P, R	DAL,MSI,SOA
M55342^08@10#5&	105,000	400 (char. E, H) or 800 (char. K, M)	E, H, K, M	B, C, W	E	S	P, R	DAL,MSI,SOA
M55342^08@10#7&	107,000	400 (char. E, H) or 800 (char. K, M)	E, H, K, M	B, C, W	E	S	P, R	DAL,MSI,SOA
M55342^08@11#0&	110,000	400 (char. E, H) or 800 (char. K, M)	E, H, K, M	B, C, W	E, H, K	S	P, R	DAL,MSI,SOA
M55342^08@11#3&	113,000	400 (char. E, H) or 800 (char. K, M)	E, H, K, M	B, C, W	E	S	P, R	DAL,MSI,SOA
M55342^08@11#5&	115,000	400 (char. E, H) or 800 (char. K, M)	E, H, K, M	B, C, W	E	S	P, R	DAL,MSI,SOA
M55342^08@11#8&	118,000	400 (char. E, H) or 800 (char. K, M)	E, H, K, M	B, C, W	E	S	P, R	DAL,MSI,SOA
M55342^08@12#0&	120,000	400 (char. E, H) or 800 (char. K, M)	E, H, K, M	B, C, W	H, K, N	S	P, R	DAL,MSI,SOA
M55342^08@12#1&	121,000	400 (char. E, H) or 800 (char. K, M)	E, H, K, M	B, C, W	E	S	P, R	DAL,MSI,SOA
M55342^08@12#4&	124,000	400 (char. E, H) or 800 (char. K, M)	E, H, K, M	B, C, W	E	S	P, R	DAL,MSI,SOA
M55342^08@12#7&	127,000	400 (char. E, H) or 800 (char. K, M)	E, H, K, M	B, C, W	E	S	P, R	DAL,MSI,SOA
M55342^08@13#0&	130,000	400 (char. E, H) or 800 (char. K, M)	E, H, K, M	B, C, W	E, H, K	S	P, R	DAL,MSI,SOA
M55342^08@13#3&	133,000	400 (char. E, H) or 800 (char. K, M)	E, H, K, M	B, C, W	E	S	P, R	DAL,MSI,SOA
M55342^08@13#7&	137,000	400 (char. E, H) or 800 (char. K, M)	E, H, K, M	B, C, W	E	S	P, R	DAL,MSI,SOA
M55342^08@14#0&	140,000	400 (char. E, H) or 800 (char. K, M)	E, H, K, M	B, C, W	E	S	P, R	DAL,MSI,SOA

M55342^08@14#3&	143,000	400 (char. E, H) or 800 (char. K, M)	E, H, K, M	B, C, W	E	S	P, R	DAL,MSI,SOA
M55342^08@14#7&	147,000	400 (char. E, H) or 800 (char. K, M)	E, H, K, M	B, C, W	E	S	P, R	DAL,MSI,SOA
M55342^08@15#0&	150,000	400 (char. E, H) or 800 (char. K, M)	E, H, K, M	B, C, W	E, H, K, N	S	P, R	DAL,MSI,SOA
M55342^08@15#4&	154,000	400 (char. E, H) or 800 (char. K, M)	E, H, K, M	B, C, W	E	S	P, R	DAL,MSI,SOA
M55342^08@15#8&	158,000	400 (char. E, H) or 800 (char. K, M)	E, H, K, M	B, C, W	E	S	P, R	DAL,MSI,SOA
M55342^08@16#0&	160,000	400 (char. E, H) or 800 (char. K, M)	E, H, K, M	B, C, W	H, K	S	P, R	DAL,MSI,SOA
M55342^08@16#2&	162,000	400 (char. E, H) or 800 (char. K, M)	E, H, K, M	B, C, W	E	S	P, R	DAL,MSI,SOA
M55342^08@16#5&	165,000	400 (char. E, H) or 800 (char. K, M)	E, H, K, M	B, C, W	E	S	P, R	DAL,MSI,SOA
M55342^08@16#9&	169,000	400 (char. E, H) or 800 (char. K, M)	E, H, K, M	B, C, W	E	S	P, R	DAL,MSI,SOA
M55342^08@17#4&	174,000	400 (char. E, H) or 800 (char. K, M)	E, H, K, M	B, C, W	E	S	P, R	DAL,MSI,SOA
M55342^08@17#8&	178,000	400 (char. E, H) or 800 (char. K, M)	E, H, K, M	B, C, W	E	S	P, R	DAL,MSI,SOA
M55342^08@18#0&	180,000	400 (char. E, H) or 800 (char. K, M)	E, H, K, M	B, C, W	H, K, N	S	P, R	DAL,MSI,SOA
M55342^08@18#2&	182,000	400 (char. E, H) or 800 (char. K, M)	E, H, K, M	B, C, W	E	S	P, R	DAL,MSI,SOA
M55342^08@18#7&	187,000	400 (char. E, H) or 800 (char. K, M)	E, H, K, M	B, C, W	E	S	P, R	DAL,MSI,SOA
M55342^08@19#1&	191,000	400 (char. E, H) or 800 (char. K, M)	E, H, K, M	B, C, W	E	S	P, R	DAL,MSI,SOA
M55342^08@19#6&	196,000	400 (char. E, H) or 800 (char. K, M)	E, H, K, M	B, C, W	E	S	P, R	DAL,MSI,SOA
M55342^08@20#0&	200,000	400 (char. E, H) or 800 (char. K, M)	E, H, K, M	B, C, W	E, H, K, N	S	P, R	DAL,MSI,SOA
M55342^08@20#5&	205,000	400 (char. E, H) or 800 (char. K, M)	E, H, K, M	B, C, W	E	S	P, R	DAL,MSI,SOA
M55342^08@21#0&	210,000	400 (char. E, H) or 800 (char. K, M)	E, H, K, M	B, C, W	E	S	P, R	DAL,MSI,SOA
M55342^08@21#5&	215,000	400 (char. E, H) or 800 (char. K, M)	E, H, K, M	B, C, W	E	S	P, R	DAL,MSI,SOA
M55342^08@22#0&	220,000	400 (char. E, H) or 800 (char. K, M)	E, H, K, M	B, C, W	H, K, N	S	P, R	DAL,MSI,SOA
M55342^08@22#1&	221,000	400 (char. E, H) or 800 (char. K, M)	E, H, K, M	B, C, W	E	S	P, R	DAL,MSI,SOA
M55342^08@22#6&	226,000	400 (char. E, H) or 800 (char. K, M)	E, H, K, M	B, C, W	E	S	P, R	DAL,MSI,SOA
M55342^08@23#2&	232,000	400 (char. E, H) or 800 (char. K, M)	E, H, K, M	B, C, W	E	S	P, R	DAL,MSI,SOA
M55342^08@23#7&	237,000	400 (char. E, H) or 800 (char. K, M)	E, H, K, M	B, C, W	E	S	P, R	DAL,MSI,SOA
M55342^08@24#0&	240,000	400 (char. E, H) or 800 (char. K, M)	E, H, K, M	B, C, W	H, K	S	P, R	DAL,MSI,SOA
M55342^08@24#3&	243,000	400 (char. E, H) or 800 (char. K, M)	E, H, K, M	B, C, W	E	S	P, R	DAL,MSI,SOA
M55342^08@24#9&	249,000	400 (char. E, H) or 800 (char. K, M)	E, H, K, M	B, C, W	E	S	P, R	DAL,MSI,SOA
M55342^08@25#5&	255,000	400 (char. E, H) or 800 (char. K, M)	E, H, K, M	B, C, W	E	S	P, R	DAL,MSI,SOA
M55342^08@26#1&	261,000	400 (char. E, H) or 800 (char. K, M)	E, H, K, M	B, C, W	E	S	P, R	DAL,MSI,SOA
M55342^08@26#7&	267,000	400 (char. E, H) or 800 (char. K, M)	E, H, K, M	B, C, W	E	S	P, R	DAL,MSI,SOA
M55342^08@27#0&	270,000	400 (char. E, H) or 800 (char. K, M)	E, H, K, M	B, C, W	H, K, N	S	P, R	DAL,MSI,SOA
M55342^08@27#4&	274,000	400 (char. E, H) or 800 (char. K, M)	E, H, K, M	B, C, W	E	S	P, R	DAL,MSI,SOA
M55342^08@28#0&	280,000	400 (char. E, H) or 800 (char. K, M)	E, H, K, M	B, C, W	E	S	P, R	DAL,MSI,SOA
M55342^08@28#7&	287,000	400 (char. E, H) or 800 (char. K, M)	E, H, K, M	B, C, W	E	S	P, R	DAL,MSI,SOA
M55342^08@29#4&	294,000	400 (char. E, H) or 800 (char. K, M)	E, H, K, M	B, C, W	E	S	P, R	DAL,MSI,SOA
M55342^08@30#0&	300,000	400 (char. E, H) or 800 (char. K, M)	E, H, K, M	B, C, W	H, K	S	P, R	DAL,MSI,SOA
M55342^08@30#1&	301,000	400 (char. E, H) or 800 (char. K, M)	E, H, K, M	B, C, W	E	S	P, R	DAL,MSI,SOA
M55342^08@30#9&	309,000	400 (char. E, H) or 800 (char. K, M)	E, H, K, M	B, C, W	E	S	P, R	DAL,MSI,SOA
M55342^08@31#6&	316,000	400 (char. E, H) or 800 (char. K, M)	E, H, K, M	B, C, W	E	S	P, R	DAL,MSI,SOA
M55342^08@32#4&	324,000	400 (char. E, H) or 800 (char. K, M)	E, H, K, M	B, C, W	E	S	P, R	DAL,MSI,SOA
M55342^08@33#0&	330,000	400 (char. E, H) or 800 (char. K, M)	E, H, K, M	B, C, W	H, K, N	S	P, R	DAL,MSI,SOA
M55342^08@33#2&	332,000	400 (char. E, H) or 800 (char. K, M)	E, H, K, M	B, C, W	E	S	P, R	DAL,MSI,SOA
M55342^08@34#0&	340,000	400 (char. E, H) or 800 (char. K, M)	E, H, K, M	B, C, W	E	S	P, R	DAL,MSI,SOA
M55342^08@34#8&	348,000	400 (char. E, H) or 800 (char. K, M)	E, H, K, M	B, C, W	E	S	P, R	DAL,MSI,SOA
M55342^08@35#7&	357,000	400 (char. E, H) or 800 (char. K, M)	E, H, K, M	B, C, W	E	S	P, R	DAL,MSI,SOA
M55342^08@36#0&	360,000	400 (char. E, H) or 800 (char. K, M)	E, H, K, M	B, C, W	H, K	S	P, R	DAL,MSI,SOA

M55342^08@36#5&	365,000	400 (char. E, H) or 800 (char. K, M)	E, H, K, M	B, C, W	E	S	P, R	DAL,MSI,SOA
M55342^08@37#4&	374,000	400 (char. E, H) or 800 (char. K, M)	E, H, K, M	B, C, W	E	S	P, R	DAL,MSI,SOA
M55342^08@38#3&	383,000	400 (char. E, H) or 800 (char. K, M)	E, H, K, M	B, C, W	E	S	P, R	DAL,MSI,SOA
M55342^08@39#0&	390,000	400 (char. E, H) or 800 (char. K, M)	E, H, K, M	B, C, W	H, K, N	S	P, R	DAL,MSI,SOA
M55342^08@39#2&	392,000	400 (char. E, H) or 800 (char. K, M)	E, H, K, M	B, C, W	E	S	P, R	DAL,MSI,SOA
M55342^08@40#2&	402,000	400 (char. E, H) or 800 (char. K, M)	E, H, K, M	B, C, W	E	S	P, R	DAL,MSI,SOA
M55342^08@41#2&	412,000	400 (char. E, H) or 800 (char. K, M)	E, H, K, M	B, C, W	E	S	P, R	DAL,MSI,SOA
M55342^08@42#2&	422,000	400 (char. E, H) or 800 (char. K, M)	E, H, K, M	B, C, W	E	S	P, R	DAL,MSI,SOA
M55342^08@43#0&	430,000	400 (char. E, H) or 800 (char. K, M)	E, H, K, M	B, C, W	H, K	S	P, R	DAL,MSI,SOA
M55342^08@43#2&	432,000	400 (char. E, H) or 800 (char. K, M)	E, H, K, M	B, C, W	E	S	P, R	DAL,MSI,SOA
M55342^08@44#2&	442,000	400 (char. E, H) or 800 (char. K, M)	E, H, K, M	B, C, W	E	S	P, R	DAL,MSI,SOA
M55342^08@45#3&	453,000	400 (char. E, H) or 800 (char. K, M)	E, H, K, M	B, C, W	E	S	P, R	DAL,MSI,SOA
M55342^08@46#4&	464,000	400 (char. E, H) or 800 (char. K, M)	E, H, K, M	B, C, W	E	S	P, R	DAL,MSI,SOA
M55342^08@47#0&	470,000	400 (char. E, H) or 800 (char. K, M)	E, H, K, M	B, C, W	H, K, N	S	P, R	DAL,MSI,SOA
M55342^08@47#5&	475,000	400 (char. E, H) or 800 (char. K, M)	E, H, K, M	B, C, W	E	S	P, R	DAL,MSI,SOA
M55342^08@48#7&	487,000	400 (char. E, H) or 800 (char. K, M)	E, H, K, M	B, C, W	E	S	P, R	DAL,MSI,SOA
M55342^08@49#9&	499,000	400 (char. E, H) or 800 (char. K, M)	E, H, K, M	B, C, W	E	S	P, R	DAL,MSI,SOA
M55342^08@51#0&	510,000	400 (char. E, H) or 800 (char. K, M)	E, H, K, M	B, C, W	H, K	S	P, R	DAL,MSI,SOA
M55342^08@51#1&	511,000	400 (char. E, H) or 800 (char. K, M)	E, H, K, M	B, C, W	E	S	P, R	DAL,MSI,SOA
M55342^08@52#3&	523,000	400 (char. E, H) or 800 (char. K, M)	E, H, K, M	B, C, W	E	S	P, R	DAL,MSI,SOA
M55342^08@53#6&	536,000	400 (char. E, H) or 800 (char. K, M)	E, H, K, M	B, C, W	E	S	P, R	DAL,MSI,SOA
M55342^08@54#9&	549,000	400 (char. E, H) or 800 (char. K, M)	E, H, K, M	B, C, W	E	S	P, R	DAL,MSI,SOA
M55342^08@56#0&	560,000	400 (char. E, H) or 800 (char. K, M)	E, H, K, M	B, C, W	H, K, N	S	P, R	DAL,MSI,SOA
M55342^08@56#2&	562,000	400 (char. E, H) or 800 (char. K, M)	E, H, K, M	B, C, W	E	S	P, R	DAL,MSI,SOA
M55342^08@57#6&	576,000	400 (char. E, H) or 800 (char. K, M)	E, H, K, M	B, C, W	E	S	P, R	DAL,MSI,SOA
M55342^08@59#0&	590,000	400 (char. E, H) or 800 (char. K, M)	E, H, K, M	B, C, W	E	S	P, R	DAL,MSI,SOA
M55342^08@60#4&	604,000	400 (char. E, H) or 800 (char. K, M)	E, H, K, M	B, C, W	E	S	P, R	DAL,MSI,SOA
M55342^08@61#9&	619,000	400 (char. E, H) or 800 (char. K, M)	E, H, K, M	B, C, W	E	S	P, R	DAL,MSI,SOA
M55342^08@62#0&	620,000	400 (char. E, H) or 800 (char. K, M)	E, H, K, M	B, C, W	H, K	S	P, R	DAL,MSI,SOA
M55342^08@63#4&	634,000	400 (char. E, H) or 800 (char. K, M)	E, H, K, M	B, C, W	E	S	P, R	DAL,MSI,SOA
M55342^08@64#9&	649,000	400 (char. E, H) or 800 (char. K, M)	E, H, K, M	B, C, W	E	S	P, R	DAL,MSI,SOA
M55342^08@66#5&	665,000	400 (char. E, H) or 800 (char. K, M)	E, H, K, M	B, C, W	E	S	P, R	DAL,MSI,SOA
M55342^08@68#0&	680,000	400 (char. E, H) or 800 (char. K, M)	E, H, K, M	B, C, W	H, K, N	S	P, R	DAL,MSI,SOA
M55342^08@68#1&	681,000	400 (char. E, H) or 800 (char. K, M)	E, H, K, M	B, C, W	E	S	P, R	DAL,MSI,SOA
M55342^08@69#8&	698,000	400 (char. E, H) or 800 (char. K, M)	E, H, K, M	B, C, W	E	S	P, R	DAL,MSI,SOA
M55342^08@71#5&	715,000	400 (char. E, H) or 800 (char. K, M)	E, H, K, M	B, C, W	E	S	P, R	DAL,MSI,SOA
M55342^08@73#2&	732,000	400 (char. E, H) or 800 (char. K, M)	E, H, K, M	B, C, W	E	S	P, R	DAL,MSI,SOA
M55342^08@75#0&	750,000	400 (char. E, H) or 800 (char. K, M)	E, H, K, M	B, C, W	E, H, K	S	P, R	DAL,MSI,SOA
M55342^08@76#8&	768,000	400 (char. E, H) or 800 (char. K, M)	E, H, K, M	B, C, W	E	S	P, R	DAL,MSI,SOA
M55342^08@78#7&	787,000	400 (char. E, H) or 800 (char. K, M)	E, H, K, M	B, C, W	E	S	P, R	DAL,MSI,SOA
M55342^08@80#6&	806,000	400 (char. E, H) or 800 (char. K, M)	E, H, K, M	B, C, W	E	S	P, R	DAL,MSI,SOA
M55342^08@82#0&	820,000	400 (char. E, H) or 800 (char. K, M)	E, H, K, M	B, C, W	H, K, N	S	P, R	DAL,MSI,SOA
M55342^08@82#5&	825,000	400 (char. E, H) or 800 (char. K, M)	E, H, K, M	B, C, W	E	S	P, R	DAL,MSI,SOA
M55342^08@84#5&	845,000	400 (char. E, H) or 800 (char. K, M)	E, H, K, M	B, C, W	E	S	P, R	DAL,MSI,SOA
M55342^08@86#6&	866,000	400 (char. E, H) or 800 (char. K, M)	E, H, K, M	B, C, W	E	S	P, R	DAL,MSI,SOA
M55342^08@88#7&	887,000	400 (char. E, H) or 800 (char. K, M)	E, H, K, M	B, C, W	E	S	P, R	DAL,MSI,SOA
M55342^08@90#9&	909,000	400 (char. E, H) or 800 (char. K, M)	E, H, K, M	B, C, W	E	S	P, R	DAL,MSI,SOA

M55342^08@91#0&	910,000	400 (char. E, H) or 800 (char. K, M)	E, H, K, M	B, C, W	H, K	S	P, R	DAL,MSI,SOA
M55342^08@93#1&	931,000	400 (char. E, H) or 800 (char. K, M)	E, H, K, M	B, C, W	E	S	P, R	DAL,MSI,SOA
M55342^08@95#3&	953,000	400 (char. E, H) or 800 (char. K, M)	E, H, K, M	B, C, W	E	S	P, R	DAL,MSI,SOA
M55342^08@97#6&	976,000	400 (char. E, H) or 800 (char. K, M)	E, H, K, M	B, C, W	E	S	P, R	DAL,MSI,SOA
M55342^08@1#00&	1,000,000	400 (char. E, H) or 800 (char. K, M)	E, H, K, M	B, C, W	F, T, L, P	S	P, R	DAL,MSI,SOA
M55342^08@1#02&	1,020,000	400 (char. E, H) or 800 (char. K, M)	E, H, K, M	B, C, W	F	S	P, R	DAL,MSI,SOA
M55342^08@1#05&	1,050,000	400 (char. E, H) or 800 (char. K, M)	E, H, K, M	B, C, W	F	S	P, R	DAL,MSI,SOA
M55342^08@1#07&	1,070,000	400 (char. E, H) or 800 (char. K, M)	E, H, K, M	B, C, W	F	S	P, R	DAL,MSI,SOA
M55342^08@1#10&	1,100,000	400 (char. E, H) or 800 (char. K, M)	E, H, K, M	B, C, W	F, T, L	S	P, R	DAL,MSI,SOA
M55342^08@1#13&	1,130,000	400 (char. E, H) or 800 (char. K, M)	E, H, K, M	B, C, W	F	S	P, R	DAL,MSI,SOA
M55342^08@1#15&	1,150,000	400 (char. E, H) or 800 (char. K, M)	E, H, K, M	B, C, W	F	S	P, R	DAL,MSI,SOA
M55342^08@1#18&	1,180,000	400 (char. E, H) or 800 (char. K, M)	E, H, K, M	B, C, W	F	S	P, R	DAL,MSI,SOA
M55342^08@1#20&	1,200,000	400 (char. E, H) or 800 (char. K, M)	E, H, K, M	B, C, W	T, L, P	S	P, R	DAL,MSI,SOA
M55342^08@1#21&	1,210,000	400 (char. E, H) or 800 (char. K, M)	E, H, K, M	B, C, W	F	S	P, R	DAL,MSI,SOA
M55342^08@1#24&	1,240,000	400 (char. E, H) or 800 (char. K, M)	E, H, K, M	B, C, W	F	S	P, R	DAL,MSI,SOA
M55342^08@1#27&	1,270,000	400 (char. E, H) or 800 (char. K, M)	E, H, K, M	B, C, W	F	S	P, R	DAL,MSI,SOA
M55342^08@1#30&	1,300,000	400 (char. E, H) or 800 (char. K, M)	E, H, K, M	B, C, W	F, T, L	S	P, R	DAL,MSI,SOA
M55342^08@1#33&	1,330,000	400 (char. E, H) or 800 (char. K, M)	E, H, K, M	B, C, W	F	S	P, R	DAL,MSI,SOA
M55342^08@1#37&	1,370,000	400 (char. E, H) or 800 (char. K, M)	E, H, K, M	B, C, W	F	S	P, R	DAL,MSI,SOA
M55342^08@1#40&	1,400,000	400 (char. E, H) or 800 (char. K, M)	E, H, K, M	B, C, W	F	S	P, R	DAL,MSI,SOA
M55342^08@1#43&	1,430,000	400 (char. E, H) or 800 (char. K, M)	E, H, K, M	B, C, W	F	S	P, R	DAL,MSI,SOA
M55342^08@1#47&	1,470,000	400 (char. E, H) or 800 (char. K, M)	E, H, K, M	B, C, W	F	S	P, R	DAL,MSI,SOA
M55342^08@1#50&	1,500,000	400 (char. E, H) or 800 (char. K, M)	E, H, K, M	B, C, W	F, T, L, P	S	P, R	DAL,MSI,SOA
M55342^08@1#54&	1,540,000	400 (char. E, H) or 800 (char. K, M)	E, H, K, M	B, C, W	F	S	P, R	DAL,MSI,SOA
M55342^08@1#58&	1,580,000	400 (char. E, H) or 800 (char. K, M)	E, H, K, M	B, C, W	F	S	P, R	DAL,MSI,SOA
M55342^08@1#60&	1,600,000	400 (char. E, H) or 800 (char. K, M)	E, H, K, M	B, C, W	T, L	S	P, R	DAL,MSI,SOA
M55342^08@1#62&	1,620,000	400 (char. E, H) or 800 (char. K, M)	E, H, K, M	B, C, W	F	S	P, R	DAL,MSI,SOA
M55342^08@1#65&	1,650,000	400 (char. E, H) or 800 (char. K, M)	E, H, K, M	B, C, W	F	S	P, R	DAL,MSI,SOA
M55342^08@1#69&	1,690,000	400 (char. E, H) or 800 (char. K, M)	E, H, K, M	B, C, W	F	S	P, R	DAL,MSI,SOA
M55342^08@1#74&	1,740,000	400 (char. E, H) or 800 (char. K, M)	E, H, K, M	B, C, W	F	S	P, R	DAL,MSI,SOA
M55342^08@1#78&	1,780,000	400 (char. E, H) or 800 (char. K, M)	E, H, K, M	B, C, W	F	S	P, R	DAL,MSI,SOA
M55342^08@1#80&	1,800,000	400 (char. E, H) or 800 (char. K, M)	E, H, K, M	B, C, W	T, L, P	S	P, R	DAL,MSI,SOA
M55342^08@1#82&	1,820,000	400 (char. E, H) or 800 (char. K, M)	E, H, K, M	B, C, W	F	S	P, R	DAL,MSI,SOA
M55342^08@1#87&	1,870,000	400 (char. E, H) or 800 (char. K, M)	E, H, K, M	B, C, W	F	S	P, R	DAL,MSI,SOA
M55342^08@1#91&	1,910,000	400 (char. E, H) or 800 (char. K, M)	E, H, K, M	B, C, W	F	S	P, R	DAL,MSI,SOA
M55342^08@1#96&	1,960,000	400 (char. E, H) or 800 (char. K, M)	E, H, K, M	B, C, W	F	S	P, R	DAL,MSI,SOA
M55342^08@2#00&	2,000,000	400 (char. E, H) or 800 (char. K, M)	E, H, K, M	B, C, W	F, T, L, P	S	P, R	DAL,MSI,SOA
M55342^08@2#05&	2,050,000	400 (char. E, H) or 800 (char. K, M)	E, H, K, M	B, C, W	F	S	P, R	DAL,MSI,SOA
M55342^08@2#10&	2,100,000	400 (char. E, H) or 800 (char. K, M)	E, H, K, M	B, C, W	F	S	P, R	DAL,MSI,SOA
M55342^08@2#15&	2,150,000	400 (char. E, H) or 800 (char. K, M)	E, H, K, M	B, C, W	F	S	P, R	DAL,MSI,SOA
M55342^08@2#20&	2,200,000	400 (char. E, H) or 800 (char. K, M)	E, H, K, M	B, C, W	T, L, P	S	P, R	DAL,MSI,SOA
M55342^08@2#21&	2,210,000	400 (char. E, H) or 800 (char. K, M)	E, H, K, M	B, C, W	F	S	P, R	DAL,MSI,SOA
M55342^08@2#26&	2,260,000	400 (char. E, H) or 800 (char. K, M)	E, H, K, M	B, C, W	F	S	P, R	DAL,MSI,SOA
M55342^08@2#32&	2,320,000	400 (char. E, H) or 800 (char. K, M)	E, H, K, M	B, C, W	F	S	P, R	DAL,MSI,SOA
M55342^08@2#37&	2,370,000	400 (char. E, H) or 800 (char. K, M)	E, H, K, M	B, C, W	F	S	P, R	DAL,MSI,SOA
M55342^08@2#40&	2,400,000	400 (char. E, H) or 800 (char. K, M)	E, H, K, M	B, C, W	T, L	S	P, R	DAL,MSI,SOA
M55342^08@2#43&	2,430,000	400 (char. E, H) or 800 (char. K, M)	E, H, K, M	B, C, W	F	S	P, R	DAL,MSI,SOA

M55342^08@2#49&	2,490,000	400 (char. E, H) or 800 (char. K, M)	E, H, K, M	B, C, W	F	S	P, R	DAL,MSI,SOA
M55342^08@2#55&	2,550,000	400 (char. E, H) or 800 (char. K, M)	E, H, K, M	B, C, W	F	S	P, R	DAL,MSI,SOA
M55342^08@2#61&	2,610,000	400 (char. E, H) or 800 (char. K, M)	E, H, K, M	B, C, W	F	S	P, R	DAL,MSI,SOA
M55342^08@2#67&	2,670,000	400 (char. E, H) or 800 (char. K, M)	E, H, K, M	B, C, W	F	S	P, R	DAL,MSI,SOA
M55342^08@2#70&	2,700,000	400 (char. E, H) or 800 (char. K, M)	E, H, K, M	B, C, W	T, L, P	S	P, R	DAL,MSI,SOA
M55342^08@2#74&	2,740,000	400 (char. E, H) or 800 (char. K, M)	E, H, K, M	B, C, W	F	S	P, R	DAL,MSI,SOA
M55342^08@2#80&	2,800,000	400 (char. E, H) or 800 (char. K, M)	E, H, K, M	B, C, W	F	S	P, R	DAL,MSI,SOA
M55342^08@2#87&	2,870,000	400 (char. E, H) or 800 (char. K, M)	E, H, K, M	B, C, W	F	S	P, R	DAL,MSI,SOA
M55342^08@2#94&	2,940,000	400 (char. E, H) or 800 (char. K, M)	E, H, K, M	B, C, W	F	S	P, R	DAL,MSI,SOA
M55342^08@3#00&	3,000,000	400 (char. E, H) or 800 (char. K, M)	E, H, K, M	B, C, W	T, L	S	P, R	DAL,MSI,SOA
M55342^08@3#01&	3,010,000	400 (char. E, H) or 800 (char. K, M)	E, H, K, M	B, C, W	F	S	P, R	DAL,MSI,SOA
M55342^08@3#09&	3,090,000	400 (char. E, H) or 800 (char. K, M)	E, H, K, M	B, C, W	F	S	P, R	DAL,MSI,SOA
M55342^08@3#16&	3,160,000	400 (char. E, H) or 800 (char. K, M)	E, H, K, M	B, C, W	F	S	P, R	DAL,MSI,SOA
M55342^08@3#24&	3,240,000	400 (char. E, H) or 800 (char. K, M)	E, H, K, M	B, C, W	F	S	P, R	DAL,MSI,SOA
M55342^08@3#30&	3,300,000	400 (char. E, H) or 800 (char. K, M)	E, H, K, M	B, C, W	T, L, P	S	P, R	DAL,MSI,SOA
M55342^08@3#32&	3,320,000	400 (char. E, H) or 800 (char. K, M)	E, H, K, M	B, C, W	F	S	P, R	DAL,MSI,SOA
M55342^08@3#40&	3,400,000	400 (char. E, H) or 800 (char. K, M)	E, H, K, M	B, C, W	F	S	P, R	DAL,MSI,SOA
M55342^08@3#48&	3,480,000	400 (char. E, H) or 800 (char. K, M)	E, H, K, M	B, C, W	F	S	P, R	DAL,MSI,SOA
M55342^08@3#57&	3,570,000	400 (char. E, H) or 800 (char. K, M)	E, H, K, M	B, C, W	F	S	P, R	DAL,MSI,SOA
M55342^08@3#60&	3,600,000	400 (char. E, H) or 800 (char. K, M)	E, H, K, M	B, C, W	T, L	S	P, R	DAL,MSI,SOA
M55342^08@3#65&	3,650,000	400 (char. E, H) or 800 (char. K, M)	E, H, K, M	B, C, W	F	S	P, R	DAL,MSI,SOA
M55342^08@3#74&	3,740,000	400 (char. E, H) or 800 (char. K, M)	E, H, K, M	B, C, W	F	S	P, R	DAL,MSI,SOA
M55342^08@3#83&	3,830,000	400 (char. E, H) or 800 (char. K, M)	E, H, K, M	B, C, W	F	S	P, R	DAL,MSI,SOA
M55342^08@3#90&	3,900,000	400 (char. E, H) or 800 (char. K, M)	E, H, K, M	B, C, W	T, L, P	S	P, R	DAL,MSI,SOA
M55342^08@3#92&	3,920,000	400 (char. E, H) or 800 (char. K, M)	E, H, K, M	B, C, W	F	S	P, R	DAL,MSI,SOA
M55342^08@4#02&	4,020,000	400 (char. E, H) or 800 (char. K, M)	E, H, K, M	B, C, W	F	S	P, R	DAL,MSI,SOA
M55342^08@4#12&	4,120,000	400 (char. E, H) or 800 (char. K, M)	E, H, K, M	B, C, W	F	S	P, R	DAL,MSI,SOA
M55342^08@4#22&	4,220,000	400 (char. E, H) or 800 (char. K, M)	E, H, K, M	B, C, W	F	S	P, R	DAL,MSI,SOA
M55342^08@4#30&	4,300,000	400 (char. E, H) or 800 (char. K, M)	E, H, K, M	B, C, W	T, L	S	P, R	DAL,MSI,SOA
M55342^08@4#32&	4,320,000	400 (char. E, H) or 800 (char. K, M)	E, H, K, M	B, C, W	F	S	P, R	DAL,MSI,SOA
M55342^08@4#42&	4,420,000	400 (char. E, H) or 800 (char. K, M)	E, H, K, M	B, C, W	F	S	P, R	DAL,MSI,SOA
M55342^08@4#53&	4,530,000	400 (char. E, H) or 800 (char. K, M)	E, H, K, M	B, C, W	F	S	P, R	DAL,MSI,SOA
M55342^08@4#64&	4,640,000	400 (char. E, H) or 800 (char. K, M)	E, H, K, M	B, C, W	F	S	P, R	DAL,MSI,SOA
M55342^08@4#70&	4,700,000	400 (char. E, H) or 800 (char. K, M)	E, H, K, M	B, C, W	T, L, P	S	P, R	DAL,MSI,SOA
M55342^08@4#75&	4,750,000	400 (char. E, H) or 800 (char. K, M)	E, H, K, M	B, C, W	F	S	P, R	DAL,MSI,SOA
M55342^08@4#87&	4,870,000	400 (char. E, H) or 800 (char. K, M)	E, H, K, M	B, C, W	F	S	P, R	DAL,MSI,SOA
M55342^08@4#99&	4,990,000	400 (char. E, H) or 800 (char. K, M)	E, H, K, M	B, C, W	F	S	P, R	DAL,MSI,SOA
M55342^08@5#10&	5,100,000	400 (char. E, H) or 800 (char. K, M)	E, H, K, M	B, C, W	T, L	S	P, R	DAL,MSI,SOA
M55342^08@5#11&	5,110,000	400 (char. E, H) or 800 (char. K, M)	E, H, K, M	B, C, W	F	S	P, R	DAL,MSI,SOA
M55342^08@5#23&	5,230,000	400 (char. E, H) or 800 (char. K, M)	E, H, K, M	B, C, W	F	S	P, R	DAL,MSI,SOA
M55342^08@5#36&	5,360,000	400 (char. E, H) or 800 (char. K, M)	E, H, K, M	B, C, W	F	S	P, R	DAL,MSI,SOA
M55342^08@5#49&	5,490,000	400 (char. E, H) or 800 (char. K, M)	E, H, K, M	B, C, W	F	S	P, R	DAL,MSI,SOA
M55342^08@5#60&	5,600,000	400 (char. E, H) or 800 (char. K, M)	E, H, K, M	B, C, W	T, L, P	S	P, R	DAL,MSI,SOA
M55342^08@5#62&	5,620,000	400 (char. E, H) or 800 (char. K, M)	E, H, K, M	B, C, W	F	S	P, R	DAL,MSI,SOA
M55342^08@5#76&	5,760,000	400 (char. E, H) or 800 (char. K, M)	E, H, K, M	B, C, W	F	S	P, R	DAL,MSI,SOA
M55342^08@5#90&	5,900,000	400 (char. E, H) or 800 (char. K, M)	E, H, K, M	B, C, W	F	S	P, R	DAL,MSI,SOA
M55342^08@6#04&	6,040,000	400 (char. E, H) or 800 (char. K, M)	E, H, K, M	B, C, W	F	S	P, R	DAL,MSI,SOA

M55342^08@6#19&	6,190,000	400 (char. E, H) or 800 (char. K, M)	E, H, K, M	B, C, W	F	S	P, R	DAL,MSI,SOA
M55342^08@6#20&	6,200,000	400 (char. E, H) or 800 (char. K, M)	E, H, K, M	B, C, W	T, L	S	P, R	DAL,MSI,SOA
M55342^08@6#34&	6,340,000	400 (char. E, H) or 800 (char. K, M)	E, H, K, M	B, C, W	F	S	P, R	DAL,MSI,SOA
M55342^08@6#49&	6,490,000	400 (char. E, H) or 800 (char. K, M)	E, H, K, M	B, C, W	F	S	P, R	DAL,MSI,SOA
M55342^08@6#65&	6,650,000	400 (char. E, H) or 800 (char. K, M)	E, H, K, M	B, C, W	F	S	P, R	DAL,MSI,SOA
M55342^08@6#80&	6,800,000	400 (char. E, H) or 800 (char. K, M)	E, H, K, M	B, C, W	T, L, P	S	P, R	DAL,MSI,SOA
M55342^08@6#81&	6,810,000	400 (char. E, H) or 800 (char. K, M)	E, H, K, M	B, C, W	F	S	P, R	DAL,MSI,SOA
M55342^08@6#98&	6,980,000	400 (char. E, H) or 800 (char. K, M)	E, H, K, M	B, C, W	F	S	P, R	DAL,MSI,SOA
M55342^08@7#15&	7,150,000	400 (char. E, H) or 800 (char. K, M)	E, H, K, M	B, C, W	F	S	P, R	DAL,MSI,SOA
M55342^08@7#32&	7,320,000	400 (char. E, H) or 800 (char. K, M)	E, H, K, M	B, C, W	F	S	P, R	DAL,MSI,SOA
M55342^08@7#50&	7,500,000	400 (char. E, H) or 800 (char. K, M)	E, H, K, M	B, C, W	F, T, L	S	P, R	DAL,MSI,SOA
M55342^08@7#68&	7,680,000	400 (char. E, H) or 800 (char. K, M)	E, H, K, M	B, C, W	F	S	P, R	DAL,MSI,SOA
M55342^08@7#87&	7,870,000	400 (char. E, H) or 800 (char. K, M)	E, H, K, M	B, C, W	F	S	P, R	DAL,MSI,SOA
M55342^08@8#06&	8,060,000	400 (char. E, H) or 800 (char. K, M)	E, H, K, M	B, C, W	F	S	P, R	DAL,MSI,SOA
M55342^08@8#20&	8,200,000	400 (char. E, H) or 800 (char. K, M)	E, H, K, M	B, C, W	T, L, P	S	P, R	DAL,MSI,SOA
M55342^08@8#25&	8,250,000	400 (char. E, H) or 800 (char. K, M)	E, H, K, M	B, C, W	F	S	P, R	DAL,MSI,SOA
M55342^08@8#45&	8,450,000	400 (char. E, H) or 800 (char. K, M)	E, H, K, M	B, C, W	F	S	P, R	DAL,MSI,SOA
M55342^08@8#66&	8,660,000	400 (char. E, H) or 800 (char. K, M)	E, H, K, M	B, C, W	F	S	P, R	DAL,MSI,SOA
M55342^08@8#87&	8,870,000	400 (char. E, H) or 800 (char. K, M)	E, H, K, M	B, C, W	F	S	P, R	DAL,MSI,SOA
M55342^08@9#09&	9,090,000	400 (char. E, H) or 800 (char. K, M)	E, H, K, M	B, C, W	F	S	P, R	DAL,MSI,SOA
M55342^08@9#10&	9,100,000	400 (char. E, H) or 800 (char. K, M)	E, H, K, M	B, C, W	T, L	S	P, R	DAL,MSI,SOA
M55342^08@9#31&	9,310,000	400 (char. E, H) or 800 (char. K, M)	E, H, K, M	B, C, W	F	S	P, R	DAL,MSI,SOA
M55342^08@9#53&	9,530,000	400 (char. E, H) or 800 (char. K, M)	E, H, K, M	B, C, W	F	S	P, R	DAL,MSI,SOA
M55342^08@9#76&	9,760,000	400 (char. E, H) or 800 (char. K, M)	E, H, K, M	B, C, W	F	S	P, R	DAL,MSI,SOA
M55342^08@10#0&	10,000,000	400 (char. E, H) or 800 (char. K, M)	E, H, K, M	B, C, W	T, L, P	S	P, R	DAL,MSI,SOA
M55342^08@10#2&	10,200,000	400 (char. E, H) or 800 (char. K, M)	E, H, K, M	B, C, W	F	S	P, R	DAL,MSI,SOA
M55342^08@10#5&	10,500,000	400 (char. E, H) or 800 (char. K, M)	E, H, K, M	B, C, W	F	S	P, R	DAL,MSI,SOA
M55342^08@10#7&	10,700,000	400 (char. E, H) or 800 (char. K, M)	E, H, K, M	B, C, W	F	S	P, R	DAL,MSI,SOA
M55342^08@11#0&	11,000,000	400 (char. E, H) or 800 (char. K, M)	E, H, K, M	B, C, W	T, L	S	P, R	DAL,MSI,SOA
M55342^08@11#3&	11,300,000	400 (char. E, H) or 800 (char. K, M)	E, H, K, M	B, C, W	F	S	P, R	DAL,MSI,SOA
M55342^08@11#5&	11,500,000	400 (char. E, H) or 800 (char. K, M)	E, H, K, M	B, C, W	F	S	P, R	DAL,MSI,SOA
M55342^08@11#8&	11,800,000	400 (char. E, H) or 800 (char. K, M)	E, H, K, M	B, C, W	F	S	P, R	DAL,MSI,SOA
M55342^08@12#0&	12,000,000	400 (char. E, H) or 800 (char. K, M)	E, H, K, M	B, C, W	T, L, P	S	P, R	DAL,MSI,SOA
M55342^08@12#1&	12,100,000	400 (char. E, H) or 800 (char. K, M)	E, H, K, M	B, C, W	F	S	P, R	DAL,MSI,SOA
M55342^08@12#4&	12,400,000	400 (char. E, H) or 800 (char. K, M)	E, H, K, M	B, C, W	F	S	P, R	DAL,MSI,SOA
M55342^08@12#7&	12,700,000	400 (char. E, H) or 800 (char. K, M)	E, H, K, M	B, C, W	F	S	P, R	DAL,MSI,SOA
M55342^08@13#0&	13,000,000	400 (char. E, H) or 800 (char. K, M)	E, H, K, M	B, C, W	T, L	S	P, R	DAL,MSI,SOA
M55342^08@13#3&	13,300,000	400 (char. E, H) or 800 (char. K, M)	E, H, K, M	B, C, W	F	S	P, R	DAL,MSI,SOA
M55342^08@13#7&	13,700,000	400 (char. E, H) or 800 (char. K, M)	E, H, K, M	B, C, W	F	S	P, R	DAL,MSI,SOA
M55342^08@14#0&	14,000,000	400 (char. E, H) or 800 (char. K, M)	E, H, K, M	B, C, W	F	S	P, R	DAL,MSI,SOA
M55342^08@14#3&	14,300,000	400 (char. E, H) or 800 (char. K, M)	E, H, K, M	B, C, W	F	S	P, R	DAL,MSI,SOA
M55342^08@14#7&	14,700,000	400 (char. E, H) or 800 (char. K, M)	E, H, K, M	B, C, W	F	S	P, R	DAL,MSI,SOA
M55342^08@15#0&	15,000,000	400 (char. E, H) or 800 (char. K, M)	E, H, K, M	B, C, W	T, L, P	S	P, R	DAL,MSI,SOA

RM2010 RESISTORS

DECADE BREAKDOWN

Click on the link below to see the associated parts selection listing:

Resistance Range
5.6 Ohms through 9.76 Ohms
10.0 Ohms through 97.6 Ohms
100 Ohms through 976 Ohms
1,000 Ohms through 9,760 Ohms
10,000 Ohms through 97,600 Ohms
100,000 Ohms through 976,000 Ohms
1,000,000 Ohms through 9,760,000 Ohms
10,000,000 Ohms through 15,000,000 Ohms

MIL-PRF-55342/8 (RM2010) Film Chip Resistors: 5.60 Ohms Through 9.76 Ohms

	Resistance	Power	Char.	Term.	Res. Tol./	Level 1	Level 2	
Part Number	Value (Ohms)	Rating (mW)	(^)	Type (@)	Multiplier (#)	FRL (&)	FRL (&)	Manufacturer
M55342^08@5#60&	5.60	400 (char. E, H) or 800 (char. K, M)	E, H, K, M	B, C, W	G, J, M	S, T	P, R	DAL,MSI,SOA
M55342^08@5#62&	5.62	400 (char. E, H) or 800 (char. K, M)	E, H, K, M	B, C, W	D	S, T	P, R	DAL,MSI,SOA
M55342^08@5#76&	5.76	400 (char. E, H) or 800 (char. K, M)	E, H, K, M	B, C, W	D	S, T	P, R	DAL,MSI,SOA
M55342^08@5#90&	5.90	400 (char. E, H) or 800 (char. K, M)	E, H, K, M	B, C, W	D	S, T	P, R	DAL,MSI,SOA
M55342^08@6#04&	6.04	400 (char. E, H) or 800 (char. K, M)	E, H, K, M	B, C, W	D	S, T	P, R	DAL,MSI,SOA
M55342^08@6#19&	6.19	400 (char. E, H) or 800 (char. K, M)	E, H, K, M	B, C, W	D	S, T	P, R	DAL,MSI,SOA
M55342^08@6#20&	6.20	400 (char. E, H) or 800 (char. K, M)	E, H, K, M	B, C, W	G, J	S, T	P, R	DAL,MSI,SOA
M55342^08@6#34&	6.34	400 (char. E, H) or 800 (char. K, M)	E, H, K, M	B, C, W	D	S, T	P, R	DAL,MSI,SOA
M55342^08@6#49&	6.49	400 (char. E, H) or 800 (char. K, M)	E, H, K, M	B, C, W	D	S, T	P, R	DAL,MSI,SOA
	Resistance	Power	Char.	Term.	Res. Tol./	Level 1	Level 2	
Part Number	Value (Ohms)	Rating (mW)	(^)	Type (@)	Multiplier (#)	FRL (&)	FRL (&)	Manufacturer
M55342^08@6#65&	6.65	400 (char. E, H) or 800 (char. K, M)	E, H, K, M	B, C, W	D	S, T	P, R	DAL,MSI,SOA
M55342^08@6#80&	6.80	400 (char. E, H) or 800 (char. K, M)	E, H, K, M	B, C, W	G, J, M	S, T	P, R	DAL,MSI,SOA
M55342^08@6#81&	6.81	400 (char. E, H) or 800 (char. K, M)	E, H, K, M	B, C, W	D	S, T	P, R	DAL,MSI,SOA
M55342^08@6#98&	6.98	400 (char. E, H) or 800 (char. K, M)	E, H, K, M	B, C, W	D	S, T	P, R	DAL,MSI,SOA
M55342^08@7#15&	7.15	400 (char. E, H) or 800 (char. K, M)	E, H, K, M	B, C, W	D	S, T	P, R	DAL,MSI,SOA
M55342^08@7#32&	7.32	400 (char. E, H) or 800 (char. K, M)	E, H, K, M	B, C, W	D	S, T	P, R	DAL,MSI,SOA
M55342^08@7#50&	7.50	400 (char. E, H) or 800 (char. K, M)	E, H, K, M	B, C, W	D, G, J	S, T	P, R	DAL,MSI,SOA
M55342^08@7#68&	7.68	400 (char. E, H) or 800 (char. K, M)	E, H, K, M	B, C, W	D	S, T	P, R	DAL,MSI,SOA
M55342^08@7#87&	7.87	400 (char. E, H) or 800 (char. K, M)	E, H, K, M	B, C, W	D	S, T	P, R	DAL,MSI,SOA
	Resistance	Power	Char.	Term.	Res. Tol./	Level 1	Level 2	
Part Number	Value (Ohms)	Rating (mW)	(^)	Type (@)	Multiplier (#)	FRL (&)	FRL (&)	Manufacturer
M55342^08@8#06&	8.06	400 (char. E, H) or 800 (char. K, M)	E, H, K, M	B, C, W	D	S, T	P, R	DAL,MSI,SOA
M55342^08@8#20&	8.20	400 (char. E, H) or 800 (char. K, M)	E, H, K, M	B, C, W	G, J, M	S, T	P, R	DAL,MSI,SOA
M55342^08@8#25&	8.25	400 (char. E, H) or 800 (char. K, M)	E, H, K, M	B, C, W	D	S, T	P, R	DAL,MSI,SOA
M55342^08@8#45&	8.45	400 (char. E, H) or 800 (char. K, M)	E, H, K, M	B, C, W	D	S, T	P, R	DAL,MSI,SOA
M55342^08@8#66&	8.66	400 (char. E, H) or 800 (char. K, M)	E, H, K, M	B, C, W	D	S, T	P, R	DAL,MSI,SOA
M55342^08@8#87&	8.87	400 (char. E, H) or 800 (char. K, M)	E, H, K, M	B, C, W	D	S, T	P, R	DAL,MSI,SOA

M55342^08@9#09&	9.09	400 (char. E, H) or 800 (char. K, M)	E, H, K, M	B, C, W	D	S, T	P, R	DAL,MSI,SOA
M55342^08@9#10&	9.10	400 (char. E, H) or 800 (char. K, M)	E, H, K, M	B, C, W	G, J	S, T	P, R	DAL,MSI,SOA
M55342^08@9#31&	9.31	400 (char. E, H) or 800 (char. K, M)	E, H, K, M	B, C, W	D	S, T	P, R	DAL,MSI,SOA
M55342^08@9#53&	9.53	400 (char. E, H) or 800 (char. K, M)	E, H, K, M	B, C, W	D	S, T	P, R	DAL,MSI,SOA
M55342^08@9#76&	9.76	400 (char. E, H) or 800 (char. K, M)	E, H, K, M	B, C, W	D	S, T	P, R	DAL,MSI,SOA
	Resistance	Power	Char.	Term.	Res. Tol./	Level 1	Level 2	
Part Number	Value (Ohms)	Rating (mW)	(^)	Type (@)	Multiplier (#)	FRL (&)	FRL (&)	Manufacturer

MIL-PRF-55342/8 (RM2010) Film Chip Resistors: 10.0 Ohms Through 97.6 Ohms

	Resistance	Power	Char.	Term.	Res. Tol./	Level 1	Level 2	
Part Number	Value (Ohms)	Rating (mW)	(^)	Type (@)	Multiplier (#)	FRL (&)	FRL (&)	Manufacturer
M55342^08@10#0&	10.0	400 (char. E, H) or 800 (char. K, M)	E, H, K, M	B, C, W	D, G, J, M	S, T	P, R	DAL,MSI,SOA
M55342^08@10#2&	10.2	400 (char. E, H) or 800 (char. K, M)	E, H, K, M	B, C, W	D	S, T	P, R	DAL,MSI,SOA
M55342^08@10#5&	10.5	400 (char. E, H) or 800 (char. K, M)	E, H, K, M	B, C, W	D	S, T	P, R	DAL,MSI,SOA
M55342^08@10#7&	10.7	400 (char. E, H) or 800 (char. K, M)	E, H, K, M	B, C, W	D	S, T	P, R	DAL,MSI,SOA
M55342^08@11#0&	11.0	400 (char. E, H) or 800 (char. K, M)	E, H, K, M	B, C, W	D, G, J	S, T	P, R	DAL,MSI,SOA
M55342^08@11#3&	11.3	400 (char. E, H) or 800 (char. K, M)	E, H, K, M	B, C, W	D	S, T	P, R	DAL,MSI,SOA
M55342^08@11#5&	11.5	400 (char. E, H) or 800 (char. K, M)	E, H, K, M	B, C, W	D	S, T	P, R	DAL,MSI,SOA
M55342^08@11#8&	11.8	400 (char. E, H) or 800 (char. K, M)	E, H, K, M	B, C, W	D	S, T	P, R	DAL,MSI,SOA
M55342^08@12#0&	12.0	400 (char. E, H) or 800 (char. K, M)	E, H, K, M	B, C, W	G, J, M	S, T	P, R	DAL,MSI,SOA
	Resistance	Power	Char.	Term.	Res. Tol./	Level 1	Level 2	
Part Number	Value (Ohms)	Rating (mW)	(^)	Type (@)	Multiplier (#)	FRL (&)	FRL (&)	Manufacturer
M55342^08@12#1&	12.1	400 (char. E, H) or 800 (char. K, M)	E, H, K, M	B, C, W	D	S, T	P, R	DAL,MSI,SOA
M55342^08@12#4&	12.4	400 (char. E, H) or 800 (char. K, M)	E, H, K, M	B, C, W	D	S, T	P, R	DAL,MSI,SOA
M55342^08@12#7&	12.7	400 (char. E, H) or 800 (char. K, M)	E, H, K, M	B, C, W	D	S, T	P, R	DAL,MSI,SOA
M55342^08@13#0&	13.0	400 (char. E, H) or 800 (char. K, M)	E, H, K, M	B, C, W	D, G, J	S, T	P, R	DAL,MSI,SOA
M55342^08@13#3&	13.3	400 (char. E, H) or 800 (char. K, M)	E, H, K, M	B, C, W	D	S, T	P, R	DAL,MSI,SOA
M55342^08@13#7&	13.7	400 (char. E, H) or 800 (char. K, M)	E, H, K, M	B, C, W	D	S, T	P, R	DAL,MSI,SOA
M55342^08@14#0&	14.0	400 (char. E, H) or 800 (char. K, M)	E, H, K, M	B, C, W	D	S, T	P, R	DAL,MSI,SOA
M55342^08@14#3&	14.3	400 (char. E, H) or 800 (char. K, M)	E, H, K, M	B, C, W	D	S, T	P, R	DAL,MSI,SOA
M55342^08@14#7&	14.7	400 (char. E, H) or 800 (char. K, M)	E, H, K, M	B, C, W	D	S, T	P, R	DAL,MSI,SOA
	Resistance	Power	Char.	Term.	Res. Tol./	Level 1	Level 2	
Part Number	Value (Ohms)	Rating (mW)	(^)	Type (@)	Multiplier (#)	FRL (&)	FRL (&)	Manufacturer
M55342^08@15#0&	15.0	400 (char. E, H) or 800 (char. K, M)	E, H, K, M	B, C, W	D, G, J, M	S, T	P, R	DAL,MSI,SOA
M55342^08@15#4&	15.4	400 (char. E, H) or 800 (char. K, M)	E, H, K, M	B, C, W	D	S, T	P, R	DAL,MSI,SOA
M55342^08@15#8&	15.8	400 (char. E, H) or 800 (char. K, M)	E, H, K, M	B, C, W	D	S, T	P, R	DAL,MSI,SOA
M55342^08@16#0&	16.0	400 (char. E, H) or 800 (char. K, M)	E, H, K, M	B, C, W	G, J	S, T	P, R	DAL,MSI,SOA
M55342^08@16#2&	16.2	400 (char. E, H) or 800 (char. K, M)	E, H, K, M	B, C, W	D	S, T	P, R	DAL,MSI,SOA
M55342^08@16#5&	16.5	400 (char. E, H) or 800 (char. K, M)	E, H, K, M	B, C, W	D	S, T	P, R	DAL,MSI,SOA
M55342^08@16#9&	16.9	400 (char. E, H) or 800 (char. K, M)	E, H, K, M	B, C, W	D	S, T	P, R	DAL,MSI,SOA
M55342^08@17#4&	17.4	400 (char. E, H) or 800 (char. K, M)	E, H, K, M	B, C, W	D	S, T	P, R	DAL,MSI,SOA
M55342^08@17#8&	17.8	400 (char. E, H) or 800 (char. K, M)	E, H, K, M	B, C, W	D	S, T	P, R	DAL,MSI,SOA
	Resistance	Power	Char.	Term.	Res. Tol./	Level 1	Level 2	
Part Number	Value (Ohms)	Rating (mW)	(^)	Type (@)	Multiplier (#)	FRL (&)	FRL (&)	Manufacturer

M55342^08@18#0&	18.0	400 (char. E, H) or 800 (char. K, M)	E, H, K, M	B, C, W	G, J, M	S, T	P, R	DAL,MSI,SOA
M55342^08@18#2&	18.2	400 (char. E, H) or 800 (char. K, M)	E, H, K, M	B, C, W	D	S, T	P, R	DAL,MSI,SOA
M55342^08@18#7&	18.7	400 (char. E, H) or 800 (char. K, M)	E, H, K, M	B, C, W	D	S, T	P, R	DAL,MSI,SOA
M55342^08@19#1&	19.1	400 (char. E, H) or 800 (char. K, M)	E, H, K, M	B, C, W	D	S, T	P, R	DAL,MSI,SOA
M55342^08@19#6&	19.6	400 (char. E, H) or 800 (char. K, M)	E, H, K, M	B, C, W	D	S, T	P, R	DAL,MSI,SOA
M55342^08@20#0&	20.0	400 (char. E, H) or 800 (char. K, M)	E, H, K, M	B, C, W	D, G, J, M	S, T	P, R	DAL,MSI,SOA
M55342^08@20#5&	20.5	400 (char. E, H) or 800 (char. K, M)	E, H, K, M	B, C, W	D	S, T	P, R	DAL,MSI,SOA
M55342^08@21#0&	21.0	400 (char. E, H) or 800 (char. K, M)	E, H, K, M	B, C, W	D	S, T	P, R	DAL,MSI,SOA
M55342^08@21#5&	21.5	400 (char. E, H) or 800 (char. K, M)	E, H, K, M	B, C, W	D	S, T	P, R	DAL,MSI,SOA
	Resistance	Power	Char.	Term.	Res. Tol./	Level 1	Level 2	
Part Number	Value (Ohms)	Rating (mW)	(^)	Type (@)	Multiplier (#)	FRL (&)	FRL (&)	Manufacturer
M55342^08@22#0&	22.0	400 (char. E, H) or 800 (char. K, M)	E, H, K, M	B, C, W	G, J, M	S, T	P, R	DAL,MSI,SOA
M55342^08@22#1&	22.1	400 (char. E, H) or 800 (char. K, M)	E, H, K, M	B, C, W	D	S, T	P, R	DAL,MSI,SOA
M55342^08@22#6&	22.6	400 (char. E, H) or 800 (char. K, M)	E, H, K, M	B, C, W	D	S, T	P, R	DAL,MSI,SOA
M55342^08@23#2&	23.2	400 (char. E, H) or 800 (char. K, M)	E, H, K, M	B, C, W	D	S, T	P, R	DAL,MSI,SOA
M55342^08@23#7&	23.7	400 (char. E, H) or 800 (char. K, M)	E, H, K, M	B, C, W	D	S, T	P, R	DAL,MSI,SOA
M55342^08@24#0&	24.0	400 (char. E, H) or 800 (char. K, M)	E, H, K, M	B, C, W	G, J	S, T	P, R	DAL,MSI,SOA
M55342^08@24#3&	24.3	400 (char. E, H) or 800 (char. K, M)	E, H, K, M	B, C, W	D	S, T	P, R	DAL,MSI,SOA
M55342^08@24#9&	24.9	400 (char. E, H) or 800 (char. K, M)	E, H, K, M	B, C, W	D	S, T	P, R	DAL,MSI,SOA
M55342^08@25#5&	25.5	400 (char. E, H) or 800 (char. K, M)	E, H, K, M	B, C, W	D	S, T	P, R	DAL,MSI,SOA
	Resistance	Power	Char.	Term.	Res. Tol./	Level 1	Level 2	
Part Number	Value (Ohms)	Rating (mW)	(^)	Type (@)	Multiplier (#)	FRL (&)	FRL (&)	Manufacturer
M55342^08@26#1&	26.1	400 (char. E, H) or 800 (char. K, M)	E, H, K, M	B, C, W	D	S, T	P, R	DAL,MSI,SOA
M55342^08@26#7&	26.7	400 (char. E, H) or 800 (char. K, M)	E, H, K, M	B, C, W	D	S, T	P, R	DAL,MSI,SOA
M55342^08@27#0&	27.0	400 (char. E, H) or 800 (char. K, M)	E, H, K, M	B, C, W	G, J, M	S, T	P, R	DAL,MSI,SOA
M55342^08@27#4&	27.4	400 (char. E, H) or 800 (char. K, M)	E, H, K, M	B, C, W	D	S, T	P, R	DAL,MSI,SOA
M55342^08@28#0&	28.0	400 (char. E, H) or 800 (char. K, M)	E, H, K, M	B, C, W	D	S, T	P, R	DAL,MSI,SOA
M55342^08@28#7&	28.7	400 (char. E, H) or 800 (char. K, M)	E, H, K, M	B, C, W	D	S, T	P, R	DAL,MSI,SOA
M55342^08@29#4&	29.4	400 (char. E, H) or 800 (char. K, M)	E, H, K, M	B, C, W	D	S, T	P, R	DAL,MSI,SOA
M55342^08@30#0&	30.0	400 (char. E, H) or 800 (char. K, M)	E, H, K, M	B, C, W	G, J	S, T	P, R	DAL,MSI,SOA
M55342^08@30#1&	30.1	400 (char. E, H) or 800 (char. K, M)	E, H, K, M	B, C, W	D	S, T	P, R	DAL,MSI,SOA
	Resistance	Power	Char.	Term.	Res. Tol./	Level 1	Level 2	
Part Number	Value (Ohms)	Rating (mW)	(^)	Type (@)	Multiplier (#)	FRL (&)	FRL (&)	Manufacturer
M55342^08@30#9&	30.9	400 (char. E, H) or 800 (char. K, M)	E, H, K, M	B, C, W	D	S, T	P, R	DAL,MSI,SOA
M55342^08@31#6&	31.6	400 (char. E, H) or 800 (char. K, M)	E, H, K, M	B, C, W	D	S, T	P, R	DAL,MSI,SOA
M55342^08@32#4&	32.4	400 (char. E, H) or 800 (char. K, M)	E, H, K, M	B, C, W	D	S, T	P, R	DAL,MSI,SOA
M55342^08@33#0&	33.0	400 (char. E, H) or 800 (char. K, M)	E, H, K, M	B, C, W	G, J, M	S, T	P, R	DAL,MSI,SOA
M55342^08@33#2&	33.2	400 (char. E, H) or 800 (char. K, M)	E, H, K, M	B, C, W	D	S, T	P, R	DAL,MSI,SOA
M55342^08@34#0&	34.0	400 (char. E, H) or 800 (char. K, M)	E, H, K, M	B, C, W	D	S, T	P, R	DAL,MSI,SOA
M55342^08@34#8&	34.8	400 (char. E, H) or 800 (char. K, M)	E, H, K, M	B, C, W	D	S, T	P, R	DAL,MSI,SOA
M55342^08@35#7&	35.7	400 (char. E, H) or 800 (char. K, M)	E, H, K, M	B, C, W	D	S, T	P, R	DAL,MSI,SOA
M55342^08@36#0&	36.0	400 (char. E, H) or 800 (char. K, M)	E, H, K, M	B, C, W	G, J	S, T	P, R	DAL,MSI,SOA
	Resistance	Power	Char.	Term.	Res. Tol./	Level 1	Level 2	
Part Number	Value (Ohms)	Rating (mW)	(^)	Type (@)	Multiplier (#)	FRL (&)	FRL (&)	Manufacturer
M55342^08@36#5&	36.5	400 (char. E, H) or 800 (char. K, M)	E, H, K, M	B, C, W	D	S, T	P, R	DAL,MSI,SOA
M55342^08@37#4&	37.4	400 (char. E, H) or 800 (char. K, M)	E, H, K, M	B, C, W	D	S, T	P, R	DAL,MSI,SOA
M55342^08@38#3&	38.3	400 (char. E, H) or 800 (char. K, M)	E, H, K, M	B, C, W	D	S, T	P, R	DAL,MSI,SOA

M55342^08@39#0&	39.0	400 (char. E, H) or 800 (char. K, M)	E, H, K, M	B, C, W	G, J, M	S, T	P, R	DAL,MSI,SOA
M55342^08@39#2&	39.2	400 (char. E, H) or 800 (char. K, M)	E, H, K, M	B, C, W	D	S, T	P, R	DAL,MSI,SOA
M55342^08@40#2&	40.2	400 (char. E, H) or 800 (char. K, M)	E, H, K, M	B, C, W	D	S, T	P, R	DAL,MSI,SOA
M55342^08@41#2&	41.2	400 (char. E, H) or 800 (char. K, M)	E, H, K, M	B, C, W	D	S, T	P, R	DAL,MSI,SOA
M55342^08@42#2&	42.2	400 (char. E, H) or 800 (char. K, M)	E, H, K, M	B, C, W	D	S, T	P, R	DAL,MSI,SOA
M55342^08@43#0&	43.0	400 (char. E, H) or 800 (char. K, M)	E, H, K, M	B, C, W	G, J	S, T	P, R	DAL,MSI,SOA
	Resistance	Power	Char.	Term.	Res. Tol./	Level 1	Level 2	
Part Number	Value (Ohms)	Rating (mW)	(^)	Type (@)	Multiplier (#)	FRL (&)	FRL (&)	Manufacturer
M55342^08@43#2&	43.2	400 (char. E, H) or 800 (char. K, M)	E, H, K, M	B, C, W	D	S, T	P, R	DAL,MSI,SOA
M55342^08@44#2&	44.2	400 (char. E, H) or 800 (char. K, M)	E, H, K, M	B, C, W	D	S, T	P, R	DAL,MSI,SOA
M55342^08@45#3&	45.3	400 (char. E, H) or 800 (char. K, M)	E, H, K, M	B, C, W	D	S, T	P, R	DAL,MSI,SOA
M55342^08@46#4&	46.4	400 (char. E, H) or 800 (char. K, M)	E, H, K, M	B, C, W	D	S, T	P, R	DAL,MSI,SOA
M55342^08@47#0&	47.0	400 (char. E, H) or 800 (char. K, M)	E, H, K, M	B, C, W	G, J, M	S, T	P, R	DAL,MSI,SOA
M55342^08@47#5&	47.5	400 (char. E, H) or 800 (char. K, M)	E, H, K, M	B, C, W	D	S, T	P, R	DAL,MSI,SOA
M55342^08@48#7&	48.7	400 (char. E, H) or 800 (char. K, M)	E, H, K, M	B, C, W	D	S, T	P, R	DAL,MSI,SOA
M55342^08@49#9&	49.9	400 (char. E, H) or 800 (char. K, M)	E, H, K, M	B, C, W	D	S, T	P, R	DAL,MSI,SOA
M55342^08@51#0&	51.0	400 (char. E, H) or 800 (char. K, M)	E, H, K, M	B, C, W	G, J	S, T	P, R	DAL,MSI,SOA
	Resistance	Power	Char.	Term.	Res. Tol./	Level 1	Level 2	
Part Number	Value (Ohms)	Rating (mW)	(^)	Type (@)	Multiplier (#)	FRL (&)	FRL (&)	Manufacturer
M55342^08@51#1&	51.1	400 (char. E, H) or 800 (char. K, M)	E, H, K, M	B, C, W	D	S, T	P, R	DAL,MSI,SOA
M55342^08@52#3&	52.3	400 (char. E, H) or 800 (char. K, M)	E, H, K, M	B, C, W	D	S, T	P, R	DAL,MSI,SOA
M55342^08@53#6&	53.6	400 (char. E, H) or 800 (char. K, M)	E, H, K, M	B, C, W	D	S, T	P, R	DAL,MSI,SOA
M55342^08@54#9&	54.9	400 (char. E, H) or 800 (char. K, M)	E, H, K, M	B, C, W	D	S, T	P, R	DAL,MSI,SOA
M55342^08@56#0&	56.0	400 (char. E, H) or 800 (char. K, M)	E, H, K, M	B, C, W	G, J, M	S, T	P, R	DAL,MSI,SOA
M55342^08@56#2&	56.2	400 (char. E, H) or 800 (char. K, M)	E, H, K, M	B, C, W	D	S, T	P, R	DAL,MSI,SOA
M55342^08@57#6&	57.6	400 (char. E, H) or 800 (char. K, M)	E, H, K, M	B, C, W	D	S, T	P, R	DAL,MSI,SOA
M55342^08@59#0&	59.0	400 (char. E, H) or 800 (char. K, M)	E, H, K, M	B, C, W	D	S, T	P, R	DAL,MSI,SOA
M55342^08@60#4&	60.4	400 (char. E, H) or 800 (char. K, M)	E, H, K, M	B, C, W	D	S, T	P, R	DAL,MSI,SOA
	Resistance	Power	Char.	Term.	Res. Tol./	Level 1	Level 2	
Part Number	Value (Ohms)	Rating (mW)	(^)	Type (@)	Multiplier (#)	FRL (&)	FRL (&)	Manufacturer
M55342^08@61#9&	61.9	400 (char. E, H) or 800 (char. K, M)	E, H, K, M	B, C, W	D	S, T	P, R	DAL,MSI,SOA
M55342^08@62#0&	62.0	400 (char. E, H) or 800 (char. K, M)	E, H, K, M	B, C, W	G, J	S, T	P, R	DAL,MSI,SOA
M55342^08@63#4&	63.4	400 (char. E, H) or 800 (char. K, M)	E, H, K, M	B, C, W	D	S, T	P, R	DAL,MSI,SOA
M55342^08@64#9&	64.9	400 (char. E, H) or 800 (char. K, M)	E, H, K, M	B, C, W	D	S, T	P, R	DAL,MSI,SOA
M55342^08@66#5&	66.5	400 (char. E, H) or 800 (char. K, M)	E, H, K, M	B, C, W	D	S, T	P, R	DAL,MSI,SOA
M55342^08@68#0&	68.0	400 (char. E, H) or 800 (char. K, M)	E, H, K, M	B, C, W	G, J, M	S, T	P, R	DAL,MSI,SOA
M55342^08@68#1&	68.1	400 (char. E, H) or 800 (char. K, M)	E, H, K, M	B, C, W	D	S, T	P, R	DAL,MSI,SOA
M55342^08@69#8&	69.8	400 (char. E, H) or 800 (char. K, M)	E, H, K, M	B, C, W	D	S, T	P, R	DAL,MSI,SOA
M55342^08@71#5&	71.5	400 (char. E, H) or 800 (char. K, M)	E, H, K, M	B, C, W	D	S, T	P, R	DAL,MSI,SOA
	Resistance	Power	Char.	Term.	Res. Tol./	Level 1	Level 2	
Part Number	Value (Ohms)	Rating (mW)	(^)	Type (@)	Multiplier (#)	FRL (&)	FRL (&)	Manufacturer
M55342^08@73#2&	73.2	400 (char. E, H) or 800 (char. K, M)	E, H, K, M	B, C, W	D	S, T	P, R	DAL,MSI,SOA
M55342^08@75#0&	75.0	400 (char. E, H) or 800 (char. K, M)	E, H, K, M	B, C, W	D, G, J	S, T	P, R	DAL,MSI,SOA
M55342^08@76#8&	76.8	400 (char. E, H) or 800 (char. K, M)	E, H, K, M	B, C, W	D	S, T	P, R	DAL,MSI,SOA
M55342^08@78#7&	78.7	400 (char. E, H) or 800 (char. K, M)	E, H, K, M	B, C, W	D	S, T	P, R	DAL,MSI,SOA
M55342^08@80#6&	80.6	400 (char. E, H) or 800 (char. K, M)	E, H, K, M	B, C, W	D	S, T	P, R	DAL,MSI,SOA
M55342^08@82#0&	82.0	400 (char. E, H) or 800 (char. K, M)	E, H, K, M	B, C, W	G, J, M	S, T	P, R	DAL,MSI,SOA

M55342^08@82#5&	82.5	400 (char. E, H) or 800 (char. K, M)	E, H, K, M	B, C, W	D	S, T	P, R	DAL,MSI,SOA
M55342^08@84#5&	84.5	400 (char. E, H) or 800 (char. K, M)	E, H, K, M	B, C, W	D	S, T	P, R	DAL,MSI,SOA
M55342^08@86#6&	86.6	400 (char. E, H) or 800 (char. K, M)	E, H, K, M	B, C, W	D	S, T	P, R	DAL,MSI,SOA
	Resistance	Power	Char.	Term.	Res. Tol./	Level 1	Level 2	
Part Number	Value (Ohms)	Rating (mW)	(^)	Type (@)	Multiplier (#)	FRL (&)	FRL (&)	Manufacturer
M55342^08@88#7&	88.7	400 (char. E, H) or 800 (char. K, M)	E, H, K, M	B, C, W	D	S, T	P, R	DAL,MSI,SOA
M55342^08@90#9&	90.9	400 (char. E, H) or 800 (char. K, M)	E, H, K, M	B, C, W	D	S, T	P, R	DAL,MSI,SOA
M55342^08@91#0&	91.0	400 (char. E, H) or 800 (char. K, M)	E, H, K, M	B, C, W	G, J	S, T	P, R	DAL,MSI,SOA
M55342^08@93#1&	93.1	400 (char. E, H) or 800 (char. K, M)	E, H, K, M	B, C, W	D	S, T	P, R	DAL,MSI,SOA
M55342^08@95#3&	95.3	400 (char. E, H) or 800 (char. K, M)	E, H, K, M	B, C, W	D	S, T	P, R	DAL,MSI,SOA
M55342^08@97#6&	97.6	400 (char. E, H) or 800 (char. K, M)	E, H, K, M	B, C, W	D	S, T	P, R	DAL,MSI,SOA
	Resistance	Power	Char.	Term.	Res. Tol./	Level 1	Level 2	
Part Number	Value (Ohms)	Rating (mW)	(^)	Type (@)	Multiplier (#)	FRL (&)	FRL (&)	Manufacturer

MIL-PRF-55342/8 (RM2010) Film Chip Resistors: 100 Ohms Through 976 Ohms

	Resistance	Power	Char.	Term.	Res. Tol./	Level 1	Level 2	
Part Number	Value (Ohms)	Rating (mW)	(^)	Type (@)	Multiplier (#)	FRL (&)	FRL (&)	Manufacturer
M55342^08@100#&	100	400 (char. E, H) or 800 (char. K, M)	E, H, K, M	B, C, W	D, G, J, M	S, T	P, R	DAL,MSI,SOA
M55342^08@102#&	102	400 (char. E, H) or 800 (char. K, M)	E, H, K, M	B, C, W	D	S, T	P, R	DAL,MSI,SOA
M55342^08@105#&	105	400 (char. E, H) or 800 (char. K, M)	E, H, K, M	B, C, W	D	S, T	P, R	DAL,MSI,SOA
M55342^08@107#&	107	400 (char. E, H) or 800 (char. K, M)	E, H, K, M	B, C, W	D	S, T	P, R	DAL,MSI,SOA
M55342^08@110#&	110	400 (char. E, H) or 800 (char. K, M)	E, H, K, M	B, C, W	D, G, J	S, T	P, R	DAL,MSI,SOA
M55342^08@113#&	113	400 (char. E, H) or 800 (char. K, M)	E, H, K, M	B, C, W	D	S, T	P, R	DAL,MSI,SOA
M55342^08@115#&	115	400 (char. E, H) or 800 (char. K, M)	E, H, K, M	B, C, W	D	S, T	P, R	DAL,MSI,SOA
M55342^08@118#&	118	400 (char. E, H) or 800 (char. K, M)	E, H, K, M	B, C, W	D	S, T	P, R	DAL,MSI,SOA
M55342^08@120#&	120	400 (char. E, H) or 800 (char. K, M)	E, H, K, M	B, C, W	G, J, M	S, T	P, R	DAL,MSI,SOA
	Resistance	Power	Char.	Term.	Res. Tol./	Level 1	Level 2	
Part Number	Value (Ohms)	Rating (mW)	(^)	Type (@)	Multiplier (#)	FRL (&)	FRL (&)	Manufacturer
M55342^08@121#&	121	400 (char. E, H) or 800 (char. K, M)	E, H, K, M	B, C, W	D	S, T	P, R	DAL,MSI,SOA
M55342^08@124#&	124	400 (char. E, H) or 800 (char. K, M)	E, H, K, M	B, C, W	D	S, T	P, R	DAL,MSI,SOA
M55342^08@127#&	127	400 (char. E, H) or 800 (char. K, M)	E, H, K, M	B, C, W	D	S, T	P, R	DAL,MSI,SOA
M55342^08@130#&	130	400 (char. E, H) or 800 (char. K, M)	E, H, K, M	B, C, W	D, G, J	S, T	P, R	DAL,MSI,SOA
M55342^08@133#&	133	400 (char. E, H) or 800 (char. K, M)	E, H, K, M	B, C, W	D	S, T	P, R	DAL,MSI,SOA
M55342^08@137#&	137	400 (char. E, H) or 800 (char. K, M)	E, H, K, M	B, C, W	D	S, T	P, R	DAL,MSI,SOA
M55342^08@140#&	140	400 (char. E, H) or 800 (char. K, M)	E, H, K, M	B, C, W	D	S, T	P, R	DAL,MSI,SOA
M55342^08@143#&	143	400 (char. E, H) or 800 (char. K, M)	E, H, K, M	B, C, W	D	S, T	P, R	DAL,MSI,SOA
M55342^08@147#&	147	400 (char. E, H) or 800 (char. K, M)	E, H, K, M	B, C, W	D	S, T	P, R	DAL,MSI,SOA
	Resistance	Power	Char.	Term.	Res. Tol./	Level 1	Level 2	
Part Number	Value (Ohms)	Rating (mW)	(^)	Type (@)	Multiplier (#)	FRL (&)	FRL (&)	Manufacturer
M55342^08@150#&	150	400 (char. E, H) or 800 (char. K, M)	E, H, K, M	B, C, W	D, G, J, M	S, T	P, R	DAL,MSI,SOA
M55342^08@154#&	154	400 (char. E, H) or 800 (char. K, M)	E, H, K, M	B, C, W	D	S, T	P, R	DAL,MSI,SOA
M55342^08@158#&	158	400 (char. E, H) or 800 (char. K, M)	E, H, K, M	B, C, W	D	S, T	P, R	DAL,MSI,SOA
M55342^08@160#&	160	400 (char. E, H) or 800 (char. K, M)	E, H, K, M	B, C, W	G, J	S, T	P, R	DAL,MSI,SOA
M55342^08@162#&	162	400 (char. E, H) or 800 (char. K, M)	E, H, K, M	B, C, W	D	S, T	P, R	DAL,MSI,SOA

M55342^08@165#&	165	400 (char. E, H) or 800 (char. K, M)	E, H, K, M	B, C, W	D	S, T	P, R	DAL,MSI,SOA
M55342^08@169#&	169	400 (char. E, H) or 800 (char. K, M)	E, H, K, M	B, C, W	D	S, T	P, R	DAL,MSI,SOA
M55342^08@174#&	174	400 (char. E, H) or 800 (char. K, M)	E, H, K, M	B, C, W	D	S, T	P, R	DAL,MSI,SOA
M55342^08@178#&	178	400 (char. E, H) or 800 (char. K, M)	E, H, K, M	B, C, W	D	S, T	P, R	DAL,MSI,SOA
	Resistance	Power	Char.	Term.	Res. Tol./	Level 1	Level 2	
Part Number	Value (Ohms)	Rating (mW)	(^)	Type (@)	Multiplier (#)	FRL (&)	FRL (&)	Manufacturer
M55342^08@180#&	180	400 (char. E, H) or 800 (char. K, M)	E, H, K, M	B, C, W	G, J, M	S, T	P, R	DAL,MSI,SOA
M55342^08@182#&	182	400 (char. E, H) or 800 (char. K, M)	E, H, K, M	B, C, W	D	S, T	P, R	DAL,MSI,SOA
M55342^08@187#&	187	400 (char. E, H) or 800 (char. K, M)	E, H, K, M	B, C, W	D	S, T	P, R	DAL,MSI,SOA
M55342^08@191#&	191	400 (char. E, H) or 800 (char. K, M)	E, H, K, M	B, C, W	D	S, T	P, R	DAL,MSI,SOA
M55342^08@196#&	196	400 (char. E, H) or 800 (char. K, M)	E, H, K, M	B, C, W	D	S, T	P, R	DAL,MSI,SOA
M55342^08@200#&	200	400 (char. E, H) or 800 (char. K, M)	E, H, K, M	B, C, W	D, G, J, M	S, T	P, R	DAL,MSI,SOA
M55342^08@205#&	205	400 (char. E, H) or 800 (char. K, M)	E, H, K, M	B, C, W	D	S, T	P, R	DAL,MSI,SOA
M55342^08@210#&	210	400 (char. E, H) or 800 (char. K, M)	E, H, K, M	B, C, W	D	S, T	P, R	DAL,MSI,SOA
M55342^08@215#&	215	400 (char. E, H) or 800 (char. K, M)	E, H, K, M	B, C, W	D	S, T	P, R	DAL,MSI,SOA
	Resistance	Power	Char.	Term.	Res. Tol./	Level 1	Level 2	
Part Number	Value (Ohms)	Rating (mW)	(^)	Type (@)	Multiplier (#)	FRL (&)	FRL (&)	Manufacturer
M55342^08@220#&	220	400 (char. E, H) or 800 (char. K, M)	E, H, K, M	B, C, W	G, J, M	S, T	P, R	DAL,MSI,SOA
M55342^08@221#&	221	400 (char. E, H) or 800 (char. K, M)	E, H, K, M	B, C, W	D	S, T	P, R	DAL,MSI,SOA
M55342^08@226#&	226	400 (char. E, H) or 800 (char. K, M)	E, H, K, M	B, C, W	D	S, T	P, R	DAL,MSI,SOA
M55342^08@232#&	232	400 (char. E, H) or 800 (char. K, M)	E, H, K, M	B, C, W	D	S, T	P, R	DAL,MSI,SOA
M55342^08@237#&	237	400 (char. E, H) or 800 (char. K, M)	E, H, K, M	B, C, W	D	S, T	P, R	DAL,MSI,SOA
M55342^08@240#&	240	400 (char. E, H) or 800 (char. K, M)	E, H, K, M	B, C, W	G, J	S, T	P, R	DAL,MSI,SOA
M55342^08@243#&	243	400 (char. E, H) or 800 (char. K, M)	E, H, K, M	B, C, W	D	S, T	P, R	DAL,MSI,SOA
M55342^08@249#&	249	400 (char. E, H) or 800 (char. K, M)	E, H, K, M	B, C, W	D	S, T	P, R	DAL,MSI,SOA
M55342^08@255#&	255	400 (char. E, H) or 800 (char. K, M)	E, H, K, M	B, C, W	D	S, T	P, R	DAL,MSI,SOA
	Resistance	Power	Char.	Term.	Res. Tol./	Level 1	Level 2	
Part Number	Value (Ohms)	Rating (mW)	(^)	Type (@)	Multiplier (#)	FRL (&)	FRL (&)	Manufacturer
M55342^08@261#&	261	400 (char. E, H) or 800 (char. K, M)	E, H, K, M	B, C, W	D	S, T	P, R	DAL,MSI,SOA
M55342^08@267#&	267	400 (char. E, H) or 800 (char. K, M)	E, H, K, M	B, C, W	D	S, T	P, R	DAL,MSI,SOA
M55342^08@270#&	270	400 (char. E, H) or 800 (char. K, M)	E, H, K, M	B, C, W	G, J, M	S, T	P, R	DAL,MSI,SOA
M55342^08@274#&	274	400 (char. E, H) or 800 (char. K, M)	E, H, K, M	B, C, W	D	S, T	P, R	DAL,MSI,SOA
M55342^08@280#&	280	400 (char. E, H) or 800 (char. K, M)	E, H, K, M	B, C, W	D	S, T	P, R	DAL,MSI,SOA
M55342^08@287#&	287	400 (char. E, H) or 800 (char. K, M)	E, H, K, M	B, C, W	D	S, T	P, R	DAL,MSI,SOA
M55342^08@294#&	294	400 (char. E, H) or 800 (char. K, M)	E, H, K, M	B, C, W	D	S, T	P, R	DAL,MSI,SOA
M55342^08@300#&	300	400 (char. E, H) or 800 (char. K, M)	E, H, K, M	B, C, W	G, J	S, T	P, R	DAL,MSI,SOA
M55342^08@301#&	301	400 (char. E, H) or 800 (char. K, M)	E, H, K, M	B, C, W	D	S, T	P, R	DAL,MSI,SOA
	Resistance	Power	Char.	Term.	Res. Tol./	Level 1	Level 2	
Part Number	Value (Ohms)	Rating (mW)	(^)	Type (@)	Multiplier (#)	FRL (&)	FRL (&)	Manufacturer
M55342^08@309#&	309	400 (char. E, H) or 800 (char. K, M)	E, H, K, M	B, C, W	D	S, T	P, R	DAL,MSI,SOA
M55342^08@316#&	316	400 (char. E, H) or 800 (char. K, M)	E, H, K, M	B, C, W	D	S, T	P, R	DAL,MSI,SOA
M55342^08@324#&	324	400 (char. E, H) or 800 (char. K, M)	E, H, K, M	B, C, W	D	S, T	P, R	DAL,MSI,SOA
M55342^08@330#&	330	400 (char. E, H) or 800 (char. K, M)	E, H, K, M	B, C, W	G, J, M	S, T	P, R	DAL,MSI,SOA
M55342^08@332#&	332	400 (char. E, H) or 800 (char. K, M)	E, H, K, M	B, C, W	D	S, T	P, R	DAL,MSI,SOA
M55342^08@340#&	340	400 (char. E, H) or 800 (char. K, M)	E, H, K, M	B, C, W	D	S, T	P, R	DAL,MSI,SOA
M55342^08@348#&	348	400 (char. E, H) or 800 (char. K, M)	E, H, K, M	B, C, W	D	S, T	P, R	DAL,MSI,SOA
M55342^08@357#&	357	400 (char. E, H) or 800 (char. K, M)	E, H, K, M	B, C, W	D	S, T	P, R	DAL,MSI,SOA

M55342^08@360#&	360	400 (char. E, H) or 800 (char. K, M)	E, H, K, M	B, C, W	G, J	S, T	P, R	DAL,MSI,SOA
	Resistance	Power	Char.	Term.	Res. Tol./	Level 1	Level 2	
Part Number	Value (Ohms)	Rating (mW)	(^)	Type (@)	Multiplier (#)	FRL (&)	FRL (&)	Manufacturer
M55342^08@365#&	365	400 (char. E, H) or 800 (char. K, M)	E, H, K, M	B, C, W	D	S, T	P, R	DAL,MSI,SOA
M55342^08@374#&	374	400 (char. E, H) or 800 (char. K, M)	E, H, K, M	B, C, W	D	S, T	P, R	DAL,MSI,SOA
M55342^08@383#&	383	400 (char. E, H) or 800 (char. K, M)	E, H, K, M	B, C, W	D	S, T	P, R	DAL,MSI,SOA
M55342^08@390#&	390	400 (char. E, H) or 800 (char. K, M)	E, H, K, M	B, C, W	G, J, M	S, T	P, R	DAL,MSI,SOA
M55342^08@392#&	392	400 (char. E, H) or 800 (char. K, M)	E, H, K, M	B, C, W	D	S, T	P, R	DAL,MSI,SOA
M55342^08@402#&	402	400 (char. E, H) or 800 (char. K, M)	E, H, K, M	B, C, W	D	S, T	P, R	DAL,MSI,SOA
M55342^08@412#&	412	400 (char. E, H) or 800 (char. K, M)	E, H, K, M	B, C, W	D	S, T	P, R	DAL,MSI,SOA
M55342^08@422#&	422	400 (char. E, H) or 800 (char. K, M)	E, H, K, M	B, C, W	D	S, T	P, R	DAL,MSI,SOA
M55342^08@430#&	430	400 (char. E, H) or 800 (char. K, M)	E, H, K, M	B, C, W	G, J	S, T	P, R	DAL,MSI,SOA
	Resistance	Power	Char.	Term.	Res. Tol./	Level 1	Level 2	
Part Number	Value (Ohms)	Rating (mW)	(^)	Type (@)	Multiplier (#)	FRL (&)	FRL (&)	Manufacturer
M55342^08@432#&	432	400 (char. E, H) or 800 (char. K, M)	E, H, K, M	B, C, W	D	S, T	P, R	DAL,MSI,SOA
M55342^08@442#&	442	400 (char. E, H) or 800 (char. K, M)	E, H, K, M	B, C, W	D	S, T	P, R	DAL,MSI,SOA
M55342^08@453#&	453	400 (char. E, H) or 800 (char. K, M)	E, H, K, M	B, C, W	D	S, T	P, R	DAL,MSI,SOA
M55342^08@464#&	464	400 (char. E, H) or 800 (char. K, M)	E, H, K, M	B, C, W	D	S, T	P, R	DAL,MSI,SOA
M55342^08@470#&	470	400 (char. E, H) or 800 (char. K, M)	E, H, K, M	B, C, W	G, J, M	S, T	P, R	DAL,MSI,SOA
M55342^08@475#&	475	400 (char. E, H) or 800 (char. K, M)	E, H, K, M	B, C, W	D	S, T	P, R	DAL,MSI,SOA
M55342^08@487#&	487	400 (char. E, H) or 800 (char. K, M)	E, H, K, M	B, C, W	D	S, T	P, R	DAL,MSI,SOA
M55342^08@499#&	499	400 (char. E, H) or 800 (char. K, M)	E, H, K, M	B, C, W	D	S, T	P, R	DAL,MSI,SOA
M55342^08@510#&	510	400 (char. E, H) or 800 (char. K, M)	E, H, K, M	B, C, W	G, J	S, T	P, R	DAL,MSI,SOA
	Resistance	Power	Char.	Term.	Res. Tol./	Level 1	Level 2	
Part Number	Value (Ohms)	Rating (mW)	(^)	Type (@)	Multiplier (#)	FRL (&)	FRL (&)	Manufacturer
M55342^08@511#&	511	400 (char. E, H) or 800 (char. K, M)	E, H, K, M	B, C, W	D	S, T	P, R	DAL,MSI,SOA
M55342^08@523#&	523	400 (char. E, H) or 800 (char. K, M)	E, H, K, M	B, C, W	D	S, T	P, R	DAL,MSI,SOA
M55342^08@536#&	536	400 (char. E, H) or 800 (char. K, M)	E, H, K, M	B, C, W	D	S, T	P, R	DAL,MSI,SOA
M55342^08@549#&	549	400 (char. E, H) or 800 (char. K, M)	E, H, K, M	B, C, W	D	S, T	P, R	DAL,MSI,SOA
M55342^08@560#&	560	400 (char. E, H) or 800 (char. K, M)	E, H, K, M	B, C, W	G, J, M	S, T	P, R	DAL,MSI,SOA
M55342^08@562#&	562	400 (char. E, H) or 800 (char. K, M)	E, H, K, M	B, C, W	D	S, T	P, R	DAL,MSI,SOA
M55342^08@576#&	576	400 (char. E, H) or 800 (char. K, M)	E, H, K, M	B, C, W	D	S, T	P, R	DAL,MSI,SOA
M55342^08@590#&	590	400 (char. E, H) or 800 (char. K, M)	E, H, K, M	B, C, W	D	S, T	P, R	DAL,MSI,SOA
M55342^08@604#&	604	400 (char. E, H) or 800 (char. K, M)	E, H, K, M	B, C, W	D	S, T	P, R	DAL,MSI,SOA
	Resistance	Power	Char.	Term.	Res. Tol./	Level 1	Level 2	
Part Number	Value (Ohms)	Rating (mW)	(^)	Type (@)	Multiplier (#)	FRL (&)	FRL (&)	Manufacturer
M55342^08@619#&	619	400 (char. E, H) or 800 (char. K, M)	E, H, K, M	B, C, W	D	S, T	P, R	DAL,MSI,SOA
M55342^08@620#&	620	400 (char. E, H) or 800 (char. K, M)	E, H, K, M	B, C, W	G, J	S, T	P, R	DAL,MSI,SOA
M55342^08@634#&	634	400 (char. E, H) or 800 (char. K, M)	E, H, K, M	B, C, W	D	S, T	P, R	DAL,MSI,SOA
M55342^08@649#&	649	400 (char. E, H) or 800 (char. K, M)	E, H, K, M	B, C, W	D	S, T	P, R	DAL,MSI,SOA
M55342^08@665#&	665	400 (char. E, H) or 800 (char. K, M)	E, H, K, M	B, C, W	D	S, T	P, R	DAL,MSI,SOA
M55342^08@680#&	680	400 (char. E, H) or 800 (char. K, M)	E, H, K, M	B, C, W	G, J, M	S, T	P, R	DAL,MSI,SOA
M55342^08@681#&	681	400 (char. E, H) or 800 (char. K, M)	E, H, K, M	B, C, W	D	S, T	P, R	DAL,MSI,SOA
M55342^08@698#&	698	400 (char. E, H) or 800 (char. K, M)	E, H, K, M	B, C, W	D	S, T	P, R	DAL,MSI,SOA
M55342^08@715#&	715	400 (char. E, H) or 800 (char. K, M)	E, H, K, M	B, C, W	D	S, T	P, R	DAL,MSI,SOA
	Resistance	Power	Char.	Term.	Res. Tol./	Level 1	Level 2	
Part Number	Value (Ohms)	Rating (mW)	(^)	Type (@)	Multiplier (#)	FRL (&)	FRL (&)	Manufacturer

M55342^08@732#&	732	400 (char. E, H) or 800 (char. K, M)	E, H, K, M	B, C, W	D	S, T	P, R	DAL,MSI,SOA
M55342^08@750#&	750	400 (char. E, H) or 800 (char. K, M)	E, H, K, M	B, C, W	D, G, J	S, T	P, R	DAL,MSI,SOA
M55342^08@768#&	768	400 (char. E, H) or 800 (char. K, M)	E, H, K, M	B, C, W	D	S, T	P, R	DAL,MSI,SOA
M55342^08@787#&	787	400 (char. E, H) or 800 (char. K, M)	E, H, K, M	B, C, W	D	S, T	P, R	DAL,MSI,SOA
M55342^08@806#&	806	400 (char. E, H) or 800 (char. K, M)	E, H, K, M	B, C, W	D	S, T	P, R	DAL,MSI,SOA
M55342^08@820#&	820	400 (char. E, H) or 800 (char. K, M)	E, H, K, M	B, C, W	G, J, M	S, T	P, R	DAL,MSI,SOA
M55342^08@825#&	825	400 (char. E, H) or 800 (char. K, M)	E, H, K, M	B, C, W	D	S, T	P, R	DAL,MSI,SOA
M55342^08@845#&	845	400 (char. E, H) or 800 (char. K, M)	E, H, K, M	B, C, W	D	S, T	P, R	DAL,MSI,SOA
M55342^08@866#&	866	400 (char. E, H) or 800 (char. K, M)	E, H, K, M	B, C, W	D	S, T	P, R	DAL,MSI,SOA
	Resistance	Power	Char.	Term.	Res. Tol./	Level 1	Level 2	
Part Number	Value (Ohms)	Rating (mW)	(^)	Type (@)	Multiplier (#)	FRL (&)	FRL (&)	Manufacturer
M55342^08@887#&	887	400 (char. E, H) or 800 (char. K, M)	E, H, K, M	B, C, W	D	S, T	P, R	DAL,MSI,SOA
M55342^08@909#&	909	400 (char. E, H) or 800 (char. K, M)	E, H, K, M	B, C, W	D	S, T	P, R	DAL,MSI,SOA
M55342^08@910#&	910	400 (char. E, H) or 800 (char. K, M)	E, H, K, M	B, C, W	G, J	S, T	P, R	DAL,MSI,SOA
M55342^08@931#&	931	400 (char. E, H) or 800 (char. K, M)	E, H, K, M	B, C, W	D	S, T	P, R	DAL,MSI,SOA
M55342^08@953#&	953	400 (char. E, H) or 800 (char. K, M)	E, H, K, M	B, C, W	D	S, T	P, R	DAL,MSI,SOA
M55342^08@976#&	976	400 (char. E, H) or 800 (char. K, M)	E, H, K, M	B, C, W	D	S, T	P, R	DAL,MSI,SOA
	Resistance	Power	Char.	Term.	Res. Tol./	Level 1	Level 2	
Part Number	Value (Ohms)	Rating (mW)	(^)	Type (@)	Multiplier (#)	FRL (&)	FRL (&)	Manufacturer

MIL-PRF-55342/8 (RM2010) Film Chip Resistors: 1,000 Ohms Through 9,760 Ohms

	Resistance	Power	Char.	Term.	Res. Tol./	Level 1	Level 2	
Part Number	Value (Ohms)	Rating (mW)	(^)	Type (@)	Multiplier (#)	FRL (&)	FRL (&)	Manufacturer
M55342^08@1#00&	1,000	400 (char. E, H) or 800 (char. K, M)	E, H, K, M	B, C, W	E, H, K, N	S, T	P, R	DAL,MSI,SOA
M55342^08@1#02&	1,020	400 (char. E, H) or 800 (char. K, M)	E, H, K, M	B, C, W	E	S, T	P, R	DAL,MSI,SOA
M55342^08@1#05&	1,050	400 (char. E, H) or 800 (char. K, M)	E, H, K, M	B, C, W	E	S, T	P, R	DAL,MSI,SOA
M55342^08@1#07&	1,070	400 (char. E, H) or 800 (char. K, M)	E, H, K, M	B, C, W	E	S, T	P, R	DAL,MSI,SOA
M55342^08@1#10&	1,100	400 (char. E, H) or 800 (char. K, M)	E, H, K, M	B, C, W	E, H, K	S, T	P, R	DAL,MSI,SOA
M55342^08@1#13&	1,130	400 (char. E, H) or 800 (char. K, M)	E, H, K, M	B, C, W	E	S, T	P, R	DAL,MSI,SOA
M55342^08@1#15&	1,150	400 (char. E, H) or 800 (char. K, M)	E, H, K, M	B, C, W	E	S, T	P, R	DAL,MSI,SOA
M55342^08@1#18&	1,180	400 (char. E, H) or 800 (char. K, M)	E, H, K, M	B, C, W	E	S, T	P, R	DAL,MSI,SOA
M55342^08@1#20&	1,200	400 (char. E, H) or 800 (char. K, M)	E, H, K, M	B, C, W	H, K, N	S, T	P, R	DAL,MSI,SOA
	Resistance	Power	Char.	Term.	Res. Tol./	Level 1	Level 2	
Part Number	Value (Ohms)	Rating (mW)	(^)	Type (@)	Multiplier (#)	FRL (&)	FRL (&)	Manufacturer
M55342^08@1#21&	1,210	400 (char. E, H) or 800 (char. K, M)	E, H, K, M	B, C, W	E	S, T	P, R	DAL,MSI,SOA
M55342^08@1#24&	1,240	400 (char. E, H) or 800 (char. K, M)	E, H, K, M	B, C, W	E	S, T	P, R	DAL,MSI,SOA
M55342^08@1#27&	1,270	400 (char. E, H) or 800 (char. K, M)	E, H, K, M	B, C, W	E	S, T	P, R	DAL,MSI,SOA
M55342^08@1#30&	1,300	400 (char. E, H) or 800 (char. K, M)	E, H, K, M	B, C, W	E, H, K	S, T	P, R	DAL,MSI,SOA
M55342^08@1#33&	1,330	400 (char. E, H) or 800 (char. K, M)	E, H, K, M	B, C, W	E	S, T	P, R	DAL,MSI,SOA
M55342^08@1#37&	1,370	400 (char. E, H) or 800 (char. K, M)	E, H, K, M	B, C, W	E	S, T	P, R	DAL,MSI,SOA
M55342^08@1#40&	1,400	400 (char. E, H) or 800 (char. K, M)	E, H, K, M	B, C, W	E	S, T	P, R	DAL,MSI,SOA
M55342^08@1#43&	1,430	400 (char. E, H) or 800 (char. K, M)	E, H, K, M	B, C, W	E	S, T	P, R	DAL,MSI,SOA
M55342^08@1#47&	1,470	400 (char. E, H) or 800 (char. K, M)	E, H, K, M	B, C, W	E	S, T	P, R	DAL,MSI,SOA
	Resistance	Power	Char.	Term.	Res. Tol./	Level 1	Level 2	

Part Number	Value (Ohms)	Rating (mW)	(^)	Type (@)	Multiplier (#)	FRL (&)	FRL (&)	Manufacturer
M55342^08@1#50&	1,500	400 (char. E, H) or 800 (char. K, M)	E, H, K, M	B, C, W	E, H, K, N	S, T	P, R	DAL,MSI,SOA
M55342^08@1#54&	1,540	400 (char. E, H) or 800 (char. K, M)	E, H, K, M	B, C, W	E	S, T	P, R	DAL,MSI,SOA
M55342^08@1#58&	1,580	400 (char. E, H) or 800 (char. K, M)	E, H, K, M	B, C, W	E	S, T	P, R	DAL,MSI,SOA
M55342^08@1#60&	1,600	400 (char. E, H) or 800 (char. K, M)	E, H, K, M	B, C, W	H, K	S, T	P, R	DAL,MSI,SOA
M55342^08@1#62&	1,620	400 (char. E, H) or 800 (char. K, M)	E, H, K, M	B, C, W	E	S, T	P, R	DAL,MSI,SOA
M55342^08@1#65&	1,650	400 (char. E, H) or 800 (char. K, M)	E, H, K, M	B, C, W	E	S, T	P, R	DAL,MSI,SOA
M55342^08@1#69&	1,690	400 (char. E, H) or 800 (char. K, M)	E, H, K, M	B, C, W	E	S, T	P, R	DAL,MSI,SOA
M55342^08@1#74&	1,740	400 (char. E, H) or 800 (char. K, M)	E, H, K, M	B, C, W	E	S, T	P, R	DAL,MSI,SOA
M55342^08@1#78&	1,780	400 (char. E, H) or 800 (char. K, M)	E, H, K, M	B, C, W	E	S, T	P, R	DAL,MSI,SOA
	Resistance	Power	Char.	Term.	Res. Tol./	Level 1	Level 2	
Part Number	Value (Ohms)	Rating (mW)	(^)	Type (@)	Multiplier (#)	FRL (&)	FRL (&)	Manufacturer
M55342^08@1#80&	1,800	400 (char. E, H) or 800 (char. K, M)	E, H, K, M	B, C, W	H, K, N	S, T	P, R	DAL,MSI,SOA
M55342^08@1#82&	1,820	400 (char. E, H) or 800 (char. K, M)	E, H, K, M	B, C, W	E	S, T	P, R	DAL,MSI,SOA
M55342^08@1#87&	1,870	400 (char. E, H) or 800 (char. K, M)	E, H, K, M	B, C, W	E	S, T	P, R	DAL,MSI,SOA
M55342^08@1#91&	1,910	400 (char. E, H) or 800 (char. K, M)	E, H, K, M	B, C, W	E	S, T	P, R	DAL,MSI,SOA
M55342^08@1#96&	1,960	400 (char. E, H) or 800 (char. K, M)	E, H, K, M	B, C, W	E	S, T	P, R	DAL,MSI,SOA
M55342^08@2#00&	2,000	400 (char. E, H) or 800 (char. K, M)	E, H, K, M	B, C, W	E, H, K, N	S, T	P, R	DAL,MSI,SOA
M55342^08@2#05&	2,050	400 (char. E, H) or 800 (char. K, M)	E, H, K, M	B, C, W	E	S, T	P, R	DAL,MSI,SOA
M55342^08@2#10&	2,100	400 (char. E, H) or 800 (char. K, M)	E, H, K, M	B, C, W	E	S, T	P, R	DAL,MSI,SOA
M55342^08@2#15&	2,150	400 (char. E, H) or 800 (char. K, M)	E, H, K, M	B, C, W	E	S, T	P, R	DAL,MSI,SOA
	Resistance	Power	Char.	Term.	Res. Tol./	Level 1	Level 2	
Part Number	Value (Ohms)	Rating (mW)	(^)	Type (@)	Multiplier (#)	FRL (&)	FRL (&)	Manufacturer
M55342^08@2#20&	2,200	400 (char. E, H) or 800 (char. K, M)	E, H, K, M	B, C, W	H, K, N	S, T	P, R	DAL,MSI,SOA
M55342^08@2#21&	2,210	400 (char. E, H) or 800 (char. K, M)	E, H, K, M	B, C, W	E	S, T	P, R	DAL,MSI,SOA
M55342^08@2#26&	2,260	400 (char. E, H) or 800 (char. K, M)	E, H, K, M	B, C, W	E	S, T	P, R	DAL,MSI,SOA
M55342^08@2#32&	2,320	400 (char. E, H) or 800 (char. K, M)	E, H, K, M	B, C, W	E	S, T	P, R	DAL,MSI,SOA
M55342^08@2#37&	2,370	400 (char. E, H) or 800 (char. K, M)	E, H, K, M	B, C, W	E	S, T	P, R	DAL,MSI,SOA
M55342^08@2#40&	2,400	400 (char. E, H) or 800 (char. K, M)	E, H, K, M	B, C, W	H, K	S, T	P, R	DAL,MSI,SOA
M55342^08@2#43&	2,430	400 (char. E, H) or 800 (char. K, M)	E, H, K, M	B, C, W	E	S, T	P, R	DAL,MSI,SOA
M55342^08@2#49&	2,490	400 (char. E, H) or 800 (char. K, M)	E, H, K, M	B, C, W	E	S, T	P, R	DAL,MSI,SOA
M55342^08@2#55&	2,550	400 (char. E, H) or 800 (char. K, M)	E, H, K, M	B, C, W	E	S, T	P, R	DAL,MSI,SOA
	Resistance	Power	Char.	Term.	Res. Tol./	Level 1	Level 2	
Part Number	Value (Ohms)	Rating (mW)	(^)	Type (@)	Multiplier (#)	FRL (&)	FRL (&)	Manufacturer
M55342^08@2#61&	2,610	400 (char. E, H) or 800 (char. K, M)	E, H, K, M	B, C, W	E	S, T	P, R	DAL,MSI,SOA
M55342^08@2#67&	2,670	400 (char. E, H) or 800 (char. K, M)	E, H, K, M	B, C, W	E	S, T	P, R	DAL,MSI,SOA
M55342^08@2#70&	2,700	400 (char. E, H) or 800 (char. K, M)	E, H, K, M	B, C, W	H, K, N	S, T	P, R	DAL,MSI,SOA
M55342^08@2#74&	2,740	400 (char. E, H) or 800 (char. K, M)	E, H, K, M	B, C, W	E	S, T	P, R	DAL,MSI,SOA
M55342^08@2#80&	2,800	400 (char. E, H) or 800 (char. K, M)	E, H, K, M	B, C, W	E	S, T	P, R	DAL,MSI,SOA
M55342^08@2#87&	2,870	400 (char. E, H) or 800 (char. K, M)	E, H, K, M	B, C, W	E	S, T	P, R	DAL,MSI,SOA
M55342^08@2#94&	2,940	400 (char. E, H) or 800 (char. K, M)	E, H, K, M	B, C, W	E	S, T	P, R	DAL,MSI,SOA
M55342^08@3#00&	3,000	400 (char. E, H) or 800 (char. K, M)	E, H, K, M	B, C, W	H, K	S, T	P, R	DAL,MSI,SOA
M55342^08@3#01&	3,010	400 (char. E, H) or 800 (char. K, M)	E, H, K, M	B, C, W	E	S, T	P, R	DAL,MSI,SOA
	Resistance	Power	Char.	Term.	Res. Tol./	Level 1	Level 2	
Part Number	Value (Ohms)	Rating (mW)	(^)	Type (@)	Multiplier (#)	FRL (&)	FRL (&)	Manufacturer
M55342^08@3#09&	3,090	400 (char. E, H) or 800 (char. K, M)	E, H, K, M	B, C, W	E	S, T	P, R	DAL,MSI,SOA
M55342^08@3#16&	3,160	400 (char. E, H) or 800 (char. K, M)	E, H, K, M	B, C, W	E	S, T	P, R	DAL,MSI,SOA

M55342^08@3#24&	3,240	400 (char. E, H) or 800 (char. K, M)	E, H, K, M	B, C, W	E	S, T	P, R	DAL,MSI,SOA
M55342^08@3#30&	3,300	400 (char. E, H) or 800 (char. K, M)	E, H, K, M	B, C, W	H, K, N	S, T	P, R	DAL,MSI,SOA
M55342^08@3#32&	3,320	400 (char. E, H) or 800 (char. K, M)	E, H, K, M	B, C, W	E	S, T	P, R	DAL,MSI,SOA
M55342^08@3#40&	3,400	400 (char. E, H) or 800 (char. K, M)	E, H, K, M	B, C, W	E	S, T	P, R	DAL,MSI,SOA
M55342^08@3#48&	3,480	400 (char. E, H) or 800 (char. K, M)	E, H, K, M	B, C, W	E	S, T	P, R	DAL,MSI,SOA
M55342^08@3#57&	3,570	400 (char. E, H) or 800 (char. K, M)	E, H, K, M	B, C, W	E	S, T	P, R	DAL,MSI,SOA
M55342^08@3#60&	3,600	400 (char. E, H) or 800 (char. K, M)	E, H, K, M	B, C, W	H, K	S, T	P, R	DAL,MSI,SOA
	Resistance	Power	Char.	Term.	Res. Tol./	Level 1	Level 2	
Part Number	Value (Ohms)	Rating (mW)	(^)	Type (@)	Multiplier (#)	FRL (&)	FRL (&)	Manufacturer
M55342^08@3#65&	3,650	400 (char. E, H) or 800 (char. K, M)	E, H, K, M	B, C, W	E	S, T	P, R	DAL,MSI,SOA
M55342^08@3#74&	3,740	400 (char. E, H) or 800 (char. K, M)	E, H, K, M	B, C, W	E	S, T	P, R	DAL,MSI,SOA
M55342^08@3#83&	3,830	400 (char. E, H) or 800 (char. K, M)	E, H, K, M	B, C, W	E	S, T	P, R	DAL,MSI,SOA
M55342^08@3#90&	3,900	400 (char. E, H) or 800 (char. K, M)	E, H, K, M	B, C, W	H, K, N	S, T	P, R	DAL,MSI,SOA
M55342^08@3#92&	3,920	400 (char. E, H) or 800 (char. K, M)	E, H, K, M	B, C, W	E	S, T	P, R	DAL,MSI,SOA
M55342^08@4#02&	4,020	400 (char. E, H) or 800 (char. K, M)	E, H, K, M	B, C, W	E	S, T	P, R	DAL,MSI,SOA
M55342^08@4#12&	4,120	400 (char. E, H) or 800 (char. K, M)	E, H, K, M	B, C, W	E	S, T	P, R	DAL,MSI,SOA
M55342^08@4#22&	4,220	400 (char. E, H) or 800 (char. K, M)	E, H, K, M	B, C, W	E	S, T	P, R	DAL,MSI,SOA
M55342^08@4#30&	4,300	400 (char. E, H) or 800 (char. K, M)	E, H, K, M	B, C, W	H, K	S, T	P, R	DAL,MSI,SOA
	Resistance	Power	Char.	Term.	Res. Tol./	Level 1	Level 2	
Part Number	Value (Ohms)	Rating (mW)	(^)	Type (@)	Multiplier (#)	FRL (&)	FRL (&)	Manufacturer
M55342^08@4#32&	4,320	400 (char. E, H) or 800 (char. K, M)	E, H, K, M	B, C, W	E	S, T	P, R	DAL,MSI,SOA
M55342^08@4#42&	4,420	400 (char. E, H) or 800 (char. K, M)	E, H, K, M	B, C, W	E	S, T	P, R	DAL,MSI,SOA
M55342^08@4#53&	4,530	400 (char. E, H) or 800 (char. K, M)	E, H, K, M	B, C, W	E	S, T	P, R	DAL,MSI,SOA
M55342^08@4#64&	4,640	400 (char. E, H) or 800 (char. K, M)	E, H, K, M	B, C, W	E	S, T	P, R	DAL,MSI,SOA
M55342^08@4#70&	4,700	400 (char. E, H) or 800 (char. K, M)	E, H, K, M	B, C, W	H, K, N	S, T	P, R	DAL,MSI,SOA
M55342^08@4#75&	4,750	400 (char. E, H) or 800 (char. K, M)	E, H, K, M	B, C, W	E	S, T	P, R	DAL,MSI,SOA
M55342^08@4#87&	4,870	400 (char. E, H) or 800 (char. K, M)	E, H, K, M	B, C, W	E	S, T	P, R	DAL,MSI,SOA
M55342^08@4#99&	4,990	400 (char. E, H) or 800 (char. K, M)	E, H, K, M	B, C, W	E	S, T	P, R	DAL,MSI,SOA
M55342^08@5#10&	5,100	400 (char. E, H) or 800 (char. K, M)	E, H, K, M	B, C, W	H, K	S, T	P, R	DAL,MSI,SOA
	Resistance	Power	Char.	Term.	Res. Tol./	Level 1	Level 2	
Part Number	Value (Ohms)	Rating (mW)	(^)	Type (@)	Multiplier (#)	FRL (&)	FRL (&)	Manufacturer
M55342^08@5#11&	5,110	400 (char. E, H) or 800 (char. K, M)	E, H, K, M	B, C, W	E	S, T	P, R	DAL,MSI,SOA
M55342^08@5#23&	5,230	400 (char. E, H) or 800 (char. K, M)	E, H, K, M	B, C, W	E	S, T	P, R	DAL,MSI,SOA
M55342^08@5#36&	5,360	400 (char. E, H) or 800 (char. K, M)	E, H, K, M	B, C, W	E	S, T	P, R	DAL,MSI,SOA
M55342^08@5#49&	5,490	400 (char. E, H) or 800 (char. K, M)	E, H, K, M	B, C, W	E	S, T	P, R	DAL,MSI,SOA
M55342^08@5#60&	5,600	400 (char. E, H) or 800 (char. K, M)	E, H, K, M	B, C, W	H, K, N	S, T	P, R	DAL,MSI,SOA
M55342^08@5#62&	5,620	400 (char. E, H) or 800 (char. K, M)	E, H, K, M	B, C, W	E	S, T	P, R	DAL,MSI,SOA
M55342^08@5#76&	5,760	400 (char. E, H) or 800 (char. K, M)	E, H, K, M	B, C, W	E	S, T	P, R	DAL,MSI,SOA
M55342^08@5#90&	5,900	400 (char. E, H) or 800 (char. K, M)	E, H, K, M	B, C, W	E	S, T	P, R	DAL,MSI,SOA
M55342^08@6#04&	6,040	400 (char. E, H) or 800 (char. K, M)	E, H, K, M	B, C, W	E	S, T	P, R	DAL,MSI,SOA
	Resistance	Power	Char.	Term.	Res. Tol./	Level 1	Level 2	
Part Number	Value (Ohms)	Rating (mW)	(^)	Type (@)	Multiplier (#)	FRL (&)	FRL (&)	Manufacturer
M55342^08@6#19&	6,190	400 (char. E, H) or 800 (char. K, M)	E, H, K, M	B, C, W	E	S, T	P, R	DAL,MSI,SOA
M55342^08@6#20&	6,200	400 (char. E, H) or 800 (char. K, M)	E, H, K, M	B, C, W	H, K	S, T	P, R	DAL,MSI,SOA
M55342^08@6#34&	6,340	400 (char. E, H) or 800 (char. K, M)	E, H, K, M	B, C, W	E	S, T	P, R	DAL,MSI,SOA
M55342^08@6#49&	6,490	400 (char. E, H) or 800 (char. K, M)	E, H, K, M	B, C, W	E	S, T	P, R	DAL,MSI,SOA
M55342^08@6#65&	6,650	400 (char. E, H) or 800 (char. K, M)	E, H, K, M	B, C, W	E	S, T	P, R	DAL,MSI,SOA

M55342^08@6#80&	6,800	400 (char. E, H) or 800 (char. K, M)	E, H, K, M	B, C, W	H, K, N	S, T	P, R	DAL,MSI,SOA
M55342^08@6#81&	6,810	400 (char. E, H) or 800 (char. K, M)	E, H, K, M	B, C, W	E	S, T	P, R	DAL,MSI,SOA
M55342^08@6#98&	6,980	400 (char. E, H) or 800 (char. K, M)	E, H, K, M	B, C, W	E	S, T	P, R	DAL,MSI,SOA
M55342^08@7#15&	7,150	400 (char. E, H) or 800 (char. K, M)	E, H, K, M	B, C, W	E	S, T	P, R	DAL,MSI,SOA
	Resistance	Power	Char.	Term.	Res. Tol./	Level 1	Level 2	
Part Number	Value (Ohms)	Rating (mW)	(^)	Type (@)	Multiplier (#)	FRL (&)	FRL (&)	Manufacturer
M55342^08@7#32&	7,320	400 (char. E, H) or 800 (char. K, M)	E, H, K, M	B, C, W	E	S, T	P, R	DAL,MSI,SOA
M55342^08@7#50&	7,500	400 (char. E, H) or 800 (char. K, M)	E, H, K, M	B, C, W	E, H, K	S, T	P, R	DAL,MSI,SOA
M55342^08@7#68&	7,680	400 (char. E, H) or 800 (char. K, M)	E, H, K, M	B, C, W	E	S, T	P, R	DAL,MSI,SOA
M55342^08@7#87&	7,870	400 (char. E, H) or 800 (char. K, M)	E, H, K, M	B, C, W	E	S, T	P, R	DAL,MSI,SOA
M55342^08@8#06&	8,060	400 (char. E, H) or 800 (char. K, M)	E, H, K, M	B, C, W	E	S, T	P, R	DAL,MSI,SOA
M55342^08@8#20&	8,200	400 (char. E, H) or 800 (char. K, M)	E, H, K, M	B, C, W	H, K, N	S, T	P, R	DAL,MSI,SOA
M55342^08@8#25&	8,250	400 (char. E, H) or 800 (char. K, M)	E, H, K, M	B, C, W	E	S, T	P, R	DAL,MSI,SOA
M55342^08@8#45&	8,450	400 (char. E, H) or 800 (char. K, M)	E, H, K, M	B, C, W	E	S, T	P, R	DAL,MSI,SOA
M55342^08@8#66&	8,660	400 (char. E, H) or 800 (char. K, M)	E, H, K, M	B, C, W	E	S, T	P, R	DAL,MSI,SOA
	Resistance	Power	Char.	Term.	Res. Tol./	Level 1	Level 2	
Part Number	Value (Ohms)	Rating (mW)	(^)	Type (@)	Multiplier (#)	FRL (&)	FRL (&)	Manufacturer
M55342^08@8#87&	8,870	400 (char. E, H) or 800 (char. K, M)	E, H, K, M	B, C, W	E	S, T	P, R	DAL,MSI,SOA
M55342^08@9#09&	9,090	400 (char. E, H) or 800 (char. K, M)	E, H, K, M	B, C, W	E	S, T	P, R	DAL,MSI,SOA
M55342^08@9#10&	9,100	400 (char. E, H) or 800 (char. K, M)	E, H, K, M	B, C, W	H, K	S, T	P, R	DAL,MSI,SOA
M55342^08@9#31&	9,310	400 (char. E, H) or 800 (char. K, M)	E, H, K, M	B, C, W	E	S, T	P, R	DAL,MSI,SOA
M55342^08@9#53&	9,530	400 (char. E, H) or 800 (char. K, M)	E, H, K, M	B, C, W	E	S, T	P, R	DAL,MSI,SOA
M55342^08@9#76&	9,760	400 (char. E, H) or 800 (char. K, M)	E, H, K, M	B, C, W	E	S, T	P, R	DAL,MSI,SOA
	Resistance	Power	Char.	Term.	Res. Tol./	Level 1	Level 2	
Part Number	Value (Ohms)	Rating (mW)	(^)	Type (@)	Multiplier (#)	FRL (&)	FRL (&)	Manufacturer

MIL-PRF-55342/8 (RM2010) Film Chip Resistors: 10,000 Ohms Through 97,600 Ohms

	Resistance	Power	Char.	Term.	Res. Tol./	Level 1	Level 2	
Part Number	Value (Ohms)	Rating (mW)	(^)	Type (@)	Multiplier (#)	FRL (&)	FRL (&)	Manufacturer
M55342^08@10#0&	10,000	400 (char. E, H) or 800 (char. K, M)	E, H, K, M	B, C, W	E, H, K, N	S, T	P, R	DAL,MSI,SOA
M55342^08@10#2&	10,200	400 (char. E, H) or 800 (char. K, M)	E, H, K, M	B, C, W	E	S, T	P, R	DAL,MSI,SOA
M55342^08@10#5&	10,500	400 (char. E, H) or 800 (char. K, M)	E, H, K, M	B, C, W	E	S, T	P, R	DAL,MSI,SOA
M55342^08@10#7&	10,700	400 (char. E, H) or 800 (char. K, M)	E, H, K, M	B, C, W	E	S, T	P, R	DAL,MSI,SOA
M55342^08@11#0&	11,000	400 (char. E, H) or 800 (char. K, M)	E, H, K, M	B, C, W	E, H, K	S, T	P, R	DAL,MSI,SOA
M55342^08@11#3&	11,300	400 (char. E, H) or 800 (char. K, M)	E, H, K, M	B, C, W	E	S, T	P, R	DAL,MSI,SOA
M55342^08@11#5&	11,500	400 (char. E, H) or 800 (char. K, M)	E, H, K, M	B, C, W	E	S, T	P, R	DAL,MSI,SOA
M55342^08@11#8&	11,800	400 (char. E, H) or 800 (char. K, M)	E, H, K, M	B, C, W	E	S, T	P, R	DAL,MSI,SOA
M55342^08@12#0&	12,000	400 (char. E, H) or 800 (char. K, M)	E, H, K, M	B, C, W	H, K, N	S, T	P, R	DAL,MSI,SOA
	Resistance	Power	Char.	Term.	Res. Tol./	Level 1	Level 2	
Part Number	Value (Ohms)	Rating (mW)	(^)	Type (@)	Multiplier (#)	FRL (&)	FRL (&)	Manufacturer
M55342^08@12#1&	12,100	400 (char. E, H) or 800 (char. K, M)	E, H, K, M	B, C, W	E	S, T	P, R	DAL,MSI,SOA
M55342^08@12#4&	12,400	400 (char. E, H) or 800 (char. K, M)	E, H, K, M	B, C, W	E	S, T	P, R	DAL,MSI,SOA
M55342^08@12#7&	12,700	400 (char. E, H) or 800 (char. K, M)	E, H, K, M	B, C, W	E	S, T	P, R	DAL,MSI,SOA
M55342^08@13#0&	13,000	400 (char. E, H) or 800 (char. K, M)	E, H, K, M	B, C, W	E, H, K	S, T	P, R	DAL,MSI,SOA

M55342^08@13#3&	13,300	400 (char. E, H) or 800 (char. K, M)	E, H, K, M	B, C, W	E	S, T	P, R	DAL,MSI,SOA
M55342^08@13#7&	13,700	400 (char. E, H) or 800 (char. K, M)	E, H, K, M	B, C, W	E	S, T	P, R	DAL,MSI,SOA
M55342^08@14#0&	14,000	400 (char. E, H) or 800 (char. K, M)	E, H, K, M	B, C, W	E	S, T	P, R	DAL,MSI,SOA
M55342^08@14#3&	14,300	400 (char. E, H) or 800 (char. K, M)	E, H, K, M	B, C, W	E	S, T	P, R	DAL,MSI,SOA
M55342^08@14#7&	14,700	400 (char. E, H) or 800 (char. K, M)	E, H, K, M	B, C, W	E	S, T	P, R	DAL,MSI,SOA
	Resistance	Power	Char.	Term.	Res. Tol./	Level 1	Level 2	
Part Number	Value (Ohms)	Rating (mW)	(^)	Type (@)	Multiplier (#)	FRL (&)	FRL (&)	Manufacturer
M55342^08@15#0&	15,000	400 (char. E, H) or 800 (char. K, M)	E, H, K, M	B, C, W	E, H, K, N	S, T	P, R	DAL,MSI,SOA
M55342^08@15#4&	15,400	400 (char. E, H) or 800 (char. K, M)	E, H, K, M	B, C, W	E	S, T	P, R	DAL,MSI,SOA
M55342^08@15#8&	15,800	400 (char. E, H) or 800 (char. K, M)	E, H, K, M	B, C, W	E	S, T	P, R	DAL,MSI,SOA
M55342^08@16#0&	16,000	400 (char. E, H) or 800 (char. K, M)	E, H, K, M	B, C, W	H, K	S, T	P, R	DAL,MSI,SOA
M55342^08@16#2&	16,200	400 (char. E, H) or 800 (char. K, M)	E, H, K, M	B, C, W	E	S, T	P, R	DAL,MSI,SOA
M55342^08@16#5&	16,500	400 (char. E, H) or 800 (char. K, M)	E, H, K, M	B, C, W	E	S, T	P, R	DAL,MSI,SOA
M55342^08@16#9&	16,900	400 (char. E, H) or 800 (char. K, M)	E, H, K, M	B, C, W	E	S, T	P, R	DAL,MSI,SOA
M55342^08@17#4&	17,400	400 (char. E, H) or 800 (char. K, M)	E, H, K, M	B, C, W	E	S, T	P, R	DAL,MSI,SOA
M55342^08@17#8&	17,800	400 (char. E, H) or 800 (char. K, M)	E, H, K, M	B, C, W	E	S, T	P, R	DAL,MSI,SOA
	Resistance	Power	Char.	Term.	Res. Tol./	Level 1	Level 2	
Part Number	Value (Ohms)	Rating (mW)	(^)	Type (@)	Multiplier (#)	FRL (&)	FRL (&)	Manufacturer
M55342^08@18#0&	18,000	400 (char. E, H) or 800 (char. K, M)	E, H, K, M	B, C, W	H, K, N	S, T	P, R	DAL,MSI,SOA
M55342^08@18#2&	18,200	400 (char. E, H) or 800 (char. K, M)	E, H, K, M	B, C, W	E	S, T	P, R	DAL,MSI,SOA
M55342^08@18#7&	18,700	400 (char. E, H) or 800 (char. K, M)	E, H, K, M	B, C, W	E	S, T	P, R	DAL,MSI,SOA
M55342^08@19#1&	19,100	400 (char. E, H) or 800 (char. K, M)	E, H, K, M	B, C, W	E	S, T	P, R	DAL,MSI,SOA
M55342^08@19#6&	19,600	400 (char. E, H) or 800 (char. K, M)	E, H, K, M	B, C, W	E	S, T	P, R	DAL,MSI,SOA
M55342^08@20#0&	20,000	400 (char. E, H) or 800 (char. K, M)	E, H, K, M	B, C, W	E, H, K, N	S, T	P, R	DAL,MSI,SOA
M55342^08@20#5&	20,500	400 (char. E, H) or 800 (char. K, M)	E, H, K, M	B, C, W	E	S, T	P, R	DAL,MSI,SOA
M55342^08@21#0&	21,000	400 (char. E, H) or 800 (char. K, M)	E, H, K, M	B, C, W	E	S, T	P, R	DAL,MSI,SOA
M55342^08@21#5&	21,500	400 (char. E, H) or 800 (char. K, M)	E, H, K, M	B, C, W	E	S, T	P, R	DAL,MSI,SOA
	Resistance	Power	Char.	Term.	Res. Tol./	Level 1	Level 2	
Part Number	Value (Ohms)	Rating (mW)	(^)	Type (@)	Multiplier (#)	FRL (&)	FRL (&)	Manufacturer
M55342^08@22#0&	22,000	400 (char. E, H) or 800 (char. K, M)	E, H, K, M	B, C, W	H, K, N	S, T	P, R	DAL,MSI,SOA
M55342^08@22#1&	22,100	400 (char. E, H) or 800 (char. K, M)	E, H, K, M	B, C, W	E	S, T	P, R	DAL,MSI,SOA
M55342^08@22#6&	22,600	400 (char. E, H) or 800 (char. K, M)	E, H, K, M	B, C, W	E	S, T	P, R	DAL,MSI,SOA
M55342^08@23#2&	23,200	400 (char. E, H) or 800 (char. K, M)	E, H, K, M	B, C, W	E	S, T	P, R	DAL,MSI,SOA
M55342^08@23#7&	23,700	400 (char. E, H) or 800 (char. K, M)	E, H, K, M	B, C, W	E	S, T	P, R	DAL,MSI,SOA
M55342^08@24#0&	24,000	400 (char. E, H) or 800 (char. K, M)	E, H, K, M	B, C, W	H, K	S, T	P, R	DAL,MSI,SOA
M55342^08@24#3&	24,300	400 (char. E, H) or 800 (char. K, M)	E, H, K, M	B, C, W	E	S, T	P, R	DAL,MSI,SOA
M55342^08@24#9&	24,900	400 (char. E, H) or 800 (char. K, M)	E, H, K, M	B, C, W	E	S, T	P, R	DAL,MSI,SOA
M55342^08@25#5&	25,500	400 (char. E, H) or 800 (char. K, M)	E, H, K, M	B, C, W	E	S, T	P, R	DAL,MSI,SOA
	Resistance	Power	Char.	Term.	Res. Tol./	Level 1	Level 2	
Part Number	Value (Ohms)	Rating (mW)	(^)	Type (@)	Multiplier (#)	FRL (&)	FRL (&)	Manufacturer
M55342^08@26#1&	26,100	400 (char. E, H) or 800 (char. K, M)	E, H, K, M	B, C, W	E	S, T	P, R	DAL,MSI,SOA
M55342^08@26#7&	26,700	400 (char. E, H) or 800 (char. K, M)	E, H, K, M	B, C, W	E	S, T	P, R	DAL,MSI,SOA
M55342^08@27#0&	27,000	400 (char. E, H) or 800 (char. K, M)	E, H, K, M	B, C, W	H, K, N	S, T	P, R	DAL,MSI,SOA
M55342^08@27#4&	27,400	400 (char. E, H) or 800 (char. K, M)	E, H, K, M	B, C, W	E	S, T	P, R	DAL,MSI,SOA
M55342^08@28#0&	28,000	400 (char. E, H) or 800 (char. K, M)	E, H, K, M	B, C, W	E	S, T	P, R	DAL,MSI,SOA
M55342^08@28#7&	28,700	400 (char. E, H) or 800 (char. K, M)	E, H, K, M	B, C, W	E	S, T	P, R	DAL,MSI,SOA
M55342^08@29#4&	29,400	400 (char. E, H) or 800 (char. K, M)	E, H, K, M	B, C, W	E	S, T	P, R	DAL,MSI,SOA

M55342^08@30#0&	30,000	400 (char. E, H) or 800 (char. K, M)	E, H, K, M	B, C, W	H, K	S, T	P, R	DAL,MSI,SOA
M55342^08@30#1&	30,100	400 (char. E, H) or 800 (char. K, M)	E, H, K, M	B, C, W	E	S, T	P, R	DAL,MSI,SOA
	Resistance	Power	Char.	Term.	Res. Tol./	Level 1	Level 2	
Part Number	Value (Ohms)	Rating (mW)	(^)	Type (@)	Multiplier (#)	FRL (&)	FRL (&)	Manufacturer
M55342^08@30#9&	30,900	400 (char. E, H) or 800 (char. K, M)	E, H, K, M	B, C, W	E	S, T	P, R	DAL,MSI,SOA
M55342^08@31#6&	31,600	400 (char. E, H) or 800 (char. K, M)	E, H, K, M	B, C, W	E	S, T	P, R	DAL,MSI,SOA
M55342^08@32#4&	32,400	400 (char. E, H) or 800 (char. K, M)	E, H, K, M	B, C, W	E	S, T	P, R	DAL,MSI,SOA
M55342^08@33#0&	33,000	400 (char. E, H) or 800 (char. K, M)	E, H, K, M	B, C, W	H, K, N	S, T	P, R	DAL,MSI,SOA
M55342^08@33#2&	33,200	400 (char. E, H) or 800 (char. K, M)	E, H, K, M	B, C, W	E	S, T	P, R	DAL,MSI,SOA
M55342^08@34#0&	34,000	400 (char. E, H) or 800 (char. K, M)	E, H, K, M	B, C, W	E	S, T	P, R	DAL,MSI,SOA
M55342^08@34#8&	34,800	400 (char. E, H) or 800 (char. K, M)	E, H, K, M	B, C, W	E	S, T	P, R	DAL,MSI,SOA
M55342^08@35#7&	35,700	400 (char. E, H) or 800 (char. K, M)	E, H, K, M	B, C, W	E	S, T	P, R	DAL,MSI,SOA
M55342^08@36#0&	36,000	400 (char. E, H) or 800 (char. K, M)	E, H, K, M	B, C, W	H, K	S, T	P, R	DAL,MSI,SOA
	Resistance	Power	Char.	Term.	Res. Tol./	Level 1	Level 2	
Part Number	Value (Ohms)	Rating (mW)	(^)	Type (@)	Multiplier (#)	FRL (&)	FRL (&)	Manufacturer
M55342^08@36#5&	36,500	400 (char. E, H) or 800 (char. K, M)	E, H, K, M	B, C, W	E	S, T	P, R	DAL,MSI,SOA
M55342^08@37#4&	37,400	400 (char. E, H) or 800 (char. K, M)	E, H, K, M	B, C, W	E	S, T	P, R	DAL,MSI,SOA
M55342^08@38#3&	38,300	400 (char. E, H) or 800 (char. K, M)	E, H, K, M	B, C, W	E	S, T	P, R	DAL,MSI,SOA
M55342^08@39#0&	39,000	400 (char. E, H) or 800 (char. K, M)	E, H, K, M	B, C, W	H, K, N	S, T	P, R	DAL,MSI,SOA
M55342^08@39#2&	39,200	400 (char. E, H) or 800 (char. K, M)	E, H, K, M	B, C, W	E	S, T	P, R	DAL,MSI,SOA
M55342^08@40#2&	40,200	400 (char. E, H) or 800 (char. K, M)	E, H, K, M	B, C, W	E	S, T	P, R	DAL,MSI,SOA
M55342^08@41#2&	41,200	400 (char. E, H) or 800 (char. K, M)	E, H, K, M	B, C, W	E	S, T	P, R	DAL,MSI,SOA
M55342^08@42#2&	42,200	400 (char. E, H) or 800 (char. K, M)	E, H, K, M	B, C, W	E	S, T	P, R	DAL,MSI,SOA
M55342^08@43#0&	43,000	400 (char. E, H) or 800 (char. K, M)	E, H, K, M	B, C, W	H, K	S, T	P, R	DAL,MSI,SOA
	Resistance	Power	Char.	Term.	Res. Tol./	Level 1	Level 2	
Part Number	Value (Ohms)	Rating (mW)	(^)	Type (@)	Multiplier (#)	FRL (&)	FRL (&)	Manufacturer
M55342^08@43#2&	43,200	400 (char. E, H) or 800 (char. K, M)	E, H, K, M	B, C, W	E	S, T	P, R	DAL,MSI,SOA
M55342^08@44#2&	44,200	400 (char. E, H) or 800 (char. K, M)	E, H, K, M	B, C, W	E	S, T	P, R	DAL,MSI,SOA
M55342^08@45#3&	45,300	400 (char. E, H) or 800 (char. K, M)	E, H, K, M	B, C, W	E	S, T	P, R	DAL,MSI,SOA
M55342^08@46#4&	46,400	400 (char. E, H) or 800 (char. K, M)	E, H, K, M	B, C, W	E	S, T	P, R	DAL,MSI,SOA
M55342^08@47#0&	47,000	400 (char. E, H) or 800 (char. K, M)	E, H, K, M	B, C, W	H, K, N	S, T	P, R	DAL,MSI,SOA
M55342^08@47#5&	47,500	400 (char. E, H) or 800 (char. K, M)	E, H, K, M	B, C, W	E	S, T	P, R	DAL,MSI,SOA
M55342^08@48#7&	48,700	400 (char. E, H) or 800 (char. K, M)	E, H, K, M	B, C, W	E	S, T	P, R	DAL,MSI,SOA
M55342^08@49#9&	49,900	400 (char. E, H) or 800 (char. K, M)	E, H, K, M	B, C, W	E	S, T	P, R	DAL,MSI,SOA
M55342^08@51#0&	51,000	400 (char. E, H) or 800 (char. K, M)	E, H, K, M	B, C, W	H, K	S, T	P, R	DAL,MSI,SOA
	Resistance	Power	Char.	Term.	Res. Tol./	Level 1	Level 2	
Part Number	Value (Ohms)	Rating (mW)	(^)	Type (@)	Multiplier (#)	FRL (&)	FRL (&)	Manufacturer
M55342^08@51#1&	51,100	400 (char. E, H) or 800 (char. K, M)	E, H, K, M	B, C, W	E	S, T	P, R	DAL,MSI,SOA
M55342^08@52#3&	52,300	400 (char. E, H) or 800 (char. K, M)	E, H, K, M	B, C, W	E	S, T	P, R	DAL,MSI,SOA
M55342^08@53#6&	53,600	400 (char. E, H) or 800 (char. K, M)	E, H, K, M	B, C, W	E	S, T	P, R	DAL,MSI,SOA
M55342^08@54#9&	54,900	400 (char. E, H) or 800 (char. K, M)	E, H, K, M	B, C, W	E	S, T	P, R	DAL,MSI,SOA
M55342^08@56#0&	56,000	400 (char. E, H) or 800 (char. K, M)	E, H, K, M	B, C, W	H, K, N	S, T	P, R	DAL,MSI,SOA
M55342^08@56#2&	56,200	400 (char. E, H) or 800 (char. K, M)	E, H, K, M	B, C, W	E	S, T	P, R	DAL,MSI,SOA
M55342^08@57#6&	57,600	400 (char. E, H) or 800 (char. K, M)	E, H, K, M	B, C, W	E	S, T	P, R	DAL,MSI,SOA
M55342^08@59#0&	59,000	400 (char. E, H) or 800 (char. K, M)	E, H, K, M	B, C, W	E	S, T	P, R	DAL,MSI,SOA
M55342^08@60#4&	60,400	400 (char. E, H) or 800 (char. K, M)	E, H, K, M	B, C, W	E	S, T	P, R	DAL,MSI,SOA
	Resistance	Power	Char.	Term.	Res. Tol./	Level 1	Level 2	

Part Number	Value (Ohms)	Rating (mW)	(^)	Type (@)	Multiplier (#)	FRL (&)	FRL (&)	Manufacturer
M55342^08@61#9&	61,900	400 (char. E, H) or 800 (char. K, M)	E, H, K, M	B, C, W	E	S, T	P, R	DAL,MSI,SOA
M55342^08@62#0&	62,000	400 (char. E, H) or 800 (char. K, M)	E, H, K, M	B, C, W	H, K	S, T	P, R	DAL,MSI,SOA
M55342^08@63#4&	63,400	400 (char. E, H) or 800 (char. K, M)	E, H, K, M	B, C, W	E	S, T	P, R	DAL,MSI,SOA
M55342^08@64#9&	64,900	400 (char. E, H) or 800 (char. K, M)	E, H, K, M	B, C, W	E	S, T	P, R	DAL,MSI,SOA
M55342^08@66#5&	66,500	400 (char. E, H) or 800 (char. K, M)	E, H, K, M	B, C, W	E	S, T	P, R	DAL,MSI,SOA
M55342^08@68#0&	68,000	400 (char. E, H) or 800 (char. K, M)	E, H, K, M	B, C, W	H, K, N	S, T	P, R	DAL,MSI,SOA
M55342^08@68#1&	68,100	400 (char. E, H) or 800 (char. K, M)	E, H, K, M	B, C, W	E	S, T	P, R	DAL,MSI,SOA
M55342^08@69#8&	69,800	400 (char. E, H) or 800 (char. K, M)	E, H, K, M	B, C, W	E	S, T	P, R	DAL,MSI,SOA
M55342^08@71#5&	71,500	400 (char. E, H) or 800 (char. K, M)	E, H, K, M	B, C, W	E	S, T	P, R	DAL,MSI,SOA
	Resistance	Power	Char.	Term.	Res. Tol./	Level 1	Level 2	
Part Number	Value (Ohms)	Rating (mW)	(^)	Type (@)	Multiplier (#)	FRL (&)	FRL (&)	Manufacturer
M55342^08@73#2&	73,200	400 (char. E, H) or 800 (char. K, M)	E, H, K, M	B, C, W	E	S, T	P, R	DAL,MSI,SOA
M55342^08@75#0&	75,000	400 (char. E, H) or 800 (char. K, M)	E, H, K, M	B, C, W	E, H, K	S, T	P, R	DAL,MSI,SOA
M55342^08@76#8&	76,800	400 (char. E, H) or 800 (char. K, M)	E, H, K, M	B, C, W	E	S, T	P, R	DAL,MSI,SOA
M55342^08@78#7&	78,700	400 (char. E, H) or 800 (char. K, M)	E, H, K, M	B, C, W	E	S, T	P, R	DAL,MSI,SOA
M55342^08@80#6&	80,600	400 (char. E, H) or 800 (char. K, M)	E, H, K, M	B, C, W	E	S, T	P, R	DAL,MSI,SOA
M55342^08@82#0&	82,000	400 (char. E, H) or 800 (char. K, M)	E, H, K, M	B, C, W	H, K, N	S, T	P, R	DAL,MSI,SOA
M55342^08@82#5&	82,500	400 (char. E, H) or 800 (char. K, M)	E, H, K, M	B, C, W	E	S, T	P, R	DAL,MSI,SOA
M55342^08@84#5&	84,500	400 (char. E, H) or 800 (char. K, M)	E, H, K, M	B, C, W	E	S, T	P, R	DAL,MSI,SOA
M55342^08@86#6&	86,600	400 (char. E, H) or 800 (char. K, M)	E, H, K, M	B, C, W	E	S, T	P, R	DAL,MSI,SOA
	Resistance	Power	Char.	Term.	Res. Tol./	Level 1	Level 2	
Part Number	Value (Ohms)	Rating (mW)	(^)	Type (@)	Multiplier (#)	FRL (&)	FRL (&)	Manufacturer
M55342^08@88#7&	88,700	400 (char. E, H) or 800 (char. K, M)	E, H, K, M	B, C, W	E	S, T	P, R	DAL,MSI,SOA
M55342^08@90#9&	90,900	400 (char. E, H) or 800 (char. K, M)	E, H, K, M	B, C, W	E	S, T	P, R	DAL,MSI,SOA
M55342^08@91#0&	91,000	400 (char. E, H) or 800 (char. K, M)	E, H, K, M	B, C, W	H, K	S, T	P, R	DAL,MSI,SOA
M55342^08@93#1&	93,100	400 (char. E, H) or 800 (char. K, M)	E, H, K, M	B, C, W	E	S, T	P, R	DAL,MSI,SOA
M55342^08@95#3&	95,300	400 (char. E, H) or 800 (char. K, M)	E, H, K, M	B, C, W	E	S, T	P, R	DAL,MSI,SOA
M55342^08@97#6&	97,600	400 (char. E, H) or 800 (char. K, M)	E, H, K, M	B, C, W	E	S, T	P, R	DAL,MSI,SOA
	Resistance	Power	Char.	Term.	Res. Tol./	Level 1	Level 2	
Part Number	Value (Ohms)	Rating (mW)	(^)	Type (@)	Multiplier (#)	FRL (&)	FRL (&)	Manufacturer

MIL-PRF-55342/8 (RM2010) Film Chip Resistors: 100,000 Ohms Through 976,000 Ohms

	Resistance	Power	Char.	Term.	Res. Tol./	Level 1	Level 2	
Part Number	Value (Ohms)	Rating (mW)	(^)	Type (@)	Multiplier (#)	FRL (&)	FRL (&)	Manufacturer
M55342^08@100#&	100,000	400 (char. E, H) or 800 (char. K, M)	E, H, K, M	B, C, W	E, H, K, N	S, T	P, R	DAL,MSI,SOA
M55342^08@102#&	102,000	400 (char. E, H) or 800 (char. K, M)	E, H, K, M	B, C, W	E	S, T	P, R	DAL,MSI,SOA
M55342^08@105#&	105,000	400 (char. E, H) or 800 (char. K, M)	E, H, K, M	B, C, W	E	S, T	P, R	DAL,MSI,SOA
M55342^08@107#&	107,000	400 (char. E, H) or 800 (char. K, M)	E, H, K, M	B, C, W	E	S, T	P, R	DAL,MSI,SOA
M55342^08@110#&	110,000	400 (char. E, H) or 800 (char. K, M)	E, H, K, M	B, C, W	E, H, K	S, T	P, R	DAL,MSI,SOA
M55342^08@113#&	113,000	400 (char. E, H) or 800 (char. K, M)	E, H, K, M	B, C, W	E	S, T	P, R	DAL,MSI,SOA
M55342^08@115#&	115,000	400 (char. E, H) or 800 (char. K, M)	E, H, K, M	B, C, W	E	S, T	P, R	DAL,MSI,SOA
M55342^08@118#&	118,000	400 (char. E, H) or 800 (char. K, M)	E, H, K, M	B, C, W	E	S, T	P, R	DAL,MSI,SOA
M55342^08@120#&	120,000	400 (char. E, H) or 800 (char. K, M)	E, H, K, M	B, C, W	H, K, N	S, T	P, R	DAL,MSI,SOA

	Resistance	Power	Char.	Term.	Res. Tol./	Level 1	Level 2	
Part Number	Value (Ohms)	Rating (mW)	(^)	Type (@)	Multiplier (#)	FRL (&)	FRL (&)	Manufacturer
M55342^08@121#&	121,000	400 (char. E, H) or 800 (char. K, M)	E, H, K, M	B, C, W	E	S, T	P, R	DAL,MSI,SOA
M55342^08@124#&	124,000	400 (char. E, H) or 800 (char. K, M)	E, H, K, M	B, C, W	E	S, T	P, R	DAL,MSI,SOA
M55342^08@127#&	127,000	400 (char. E, H) or 800 (char. K, M)	E, H, K, M	B, C, W	E	S, T	P, R	DAL,MSI,SOA
M55342^08@130#&	130,000	400 (char. E, H) or 800 (char. K, M)	E, H, K, M	B, C, W	E, H, K	S, T	P, R	DAL,MSI,SOA
M55342^08@133#&	133,000	400 (char. E, H) or 800 (char. K, M)	E, H, K, M	B, C, W	E	S, T	P, R	DAL,MSI,SOA
M55342^08@137#&	137,000	400 (char. E, H) or 800 (char. K, M)	E, H, K, M	B, C, W	E	S, T	P, R	DAL,MSI,SOA
M55342^08@140#&	140,000	400 (char. E, H) or 800 (char. K, M)	E, H, K, M	B, C, W	E	S, T	P, R	DAL,MSI,SOA
M55342^08@143#&	143,000	400 (char. E, H) or 800 (char. K, M)	E, H, K, M	B, C, W	E	S, T	P, R	DAL,MSI,SOA
M55342^08@147#&	147,000	400 (char. E, H) or 800 (char. K, M)	E, H, K, M	B, C, W	E	S, T	P, R	DAL,MSI,SOA
	Resistance	Power	Char.	Term.	Res. Tol./	Level 1	Level 2	
Part Number	Value (Ohms)	Rating (mW)	(^)	Type (@)	Multiplier (#)	FRL (&)	FRL (&)	Manufacturer
M55342^08@150#&	150,000	400 (char. E, H) or 800 (char. K, M)	E, H, K, M	B, C, W	E, H, K, N	S, T	P, R	DAL,MSI,SOA
M55342^08@154#&	154,000	400 (char. E, H) or 800 (char. K, M)	E, H, K, M	B, C, W	E	S, T	P, R	DAL,MSI,SOA
M55342^08@158#&	158,000	400 (char. E, H) or 800 (char. K, M)	E, H, K, M	B, C, W	E	S, T	P, R	DAL,MSI,SOA
M55342^08@160#&	160,000	400 (char. E, H) or 800 (char. K, M)	E, H, K, M	B, C, W	H, K	S, T	P, R	DAL,MSI,SOA
M55342^08@162#&	162,000	400 (char. E, H) or 800 (char. K, M)	E, H, K, M	B, C, W	E	S, T	P, R	DAL,MSI,SOA
M55342^08@165#&	165,000	400 (char. E, H) or 800 (char. K, M)	E, H, K, M	B, C, W	E	S, T	P, R	DAL,MSI,SOA
M55342^08@169#&	169,000	400 (char. E, H) or 800 (char. K, M)	E, H, K, M	B, C, W	E	S, T	P, R	DAL,MSI,SOA
M55342^08@174#&	174,000	400 (char. E, H) or 800 (char. K, M)	E, H, K, M	B, C, W	E	S, T	P, R	DAL,MSI,SOA
M55342^08@178#&	178,000	400 (char. E, H) or 800 (char. K, M)	E, H, K, M	B, C, W	E	S, T	P, R	DAL,MSI,SOA
	Resistance	Power	Char.	Term.	Res. Tol./	Level 1	Level 2	
Part Number	Value (Ohms)	Rating (mW)	(^)	Type (@)	Multiplier (#)	FRL (&)	FRL (&)	Manufacturer
M55342^08@180#&	180,000	400 (char. E, H) or 800 (char. K, M)	E, H, K, M	B, C, W	H, K, N	S, T	P, R	DAL,MSI,SOA
M55342^08@182#&	182,000	400 (char. E, H) or 800 (char. K, M)	E, H, K, M	B, C, W	E	S, T	P, R	DAL,MSI,SOA
M55342^08@187#&	187,000	400 (char. E, H) or 800 (char. K, M)	E, H, K, M	B, C, W	E	S, T	P, R	DAL,MSI,SOA
M55342^08@191#&	191,000	400 (char. E, H) or 800 (char. K, M)	E, H, K, M	B, C, W	E	S, T	P, R	DAL,MSI,SOA
M55342^08@196#&	196,000	400 (char. E, H) or 800 (char. K, M)	E, H, K, M	B, C, W	E	S, T	P, R	DAL,MSI,SOA
M55342^08@200#&	200,000	400 (char. E, H) or 800 (char. K, M)	E, H, K, M	B, C, W	E, H, K, N	S, T	P, R	DAL,MSI,SOA
M55342^08@205#&	205,000	400 (char. E, H) or 800 (char. K, M)	E, H, K, M	B, C, W	E	S, T	P, R	DAL,MSI,SOA
M55342^08@210#&	210,000	400 (char. E, H) or 800 (char. K, M)	E, H, K, M	B, C, W	E	S, T	P, R	DAL,MSI,SOA
M55342^08@215#&	215,000	400 (char. E, H) or 800 (char. K, M)	E, H, K, M	B, C, W	E	S, T	P, R	DAL,MSI,SOA
	Resistance	Power	Char.	Term.	Res. Tol./	Level 1	Level 2	
Part Number	Value (Ohms)	Rating (mW)	(^)	Type (@)	Multiplier (#)	FRL (&)	FRL (&)	Manufacturer
M55342^08@220#&	220,000	400 (char. E, H) or 800 (char. K, M)	E, H, K, M	B, C, W	H, K, N	S, T	P, R	DAL,MSI,SOA
M55342^08@221#&	221,000	400 (char. E, H) or 800 (char. K, M)	E, H, K, M	B, C, W	E	S, T	P, R	DAL,MSI,SOA
M55342^08@226#&	226,000	400 (char. E, H) or 800 (char. K, M)	E, H, K, M	B, C, W	E	S, T	P, R	DAL,MSI,SOA
M55342^08@232#&	232,000	400 (char. E, H) or 800 (char. K, M)	E, H, K, M	B, C, W	E	S, T	P, R	DAL,MSI,SOA
M55342^08@237#&	237,000	400 (char. E, H) or 800 (char. K, M)	E, H, K, M	B, C, W	E	S, T	P, R	DAL,MSI,SOA
M55342^08@240#&	240,000	400 (char. E, H) or 800 (char. K, M)	E, H, K, M	B, C, W	H, K	S, T	P, R	DAL,MSI,SOA
M55342^08@243#&	243,000	400 (char. E, H) or 800 (char. K, M)	E, H, K, M	B, C, W	E	S, T	P, R	DAL,MSI,SOA
M55342^08@249#&	249,000	400 (char. E, H) or 800 (char. K, M)	E, H, K, M	B, C, W	E	S, T	P, R	DAL,MSI,SOA
M55342^08@255#&	255,000	400 (char. E, H) or 800 (char. K, M)	E, H, K, M	B, C, W	E	S, T	P, R	DAL,MSI,SOA
	Resistance	Power	Char.	Term.	Res. Tol./	Level 1	Level 2	
Part Number	Value (Ohms)	Rating (mW)	(^)	Type (@)	Multiplier (#)	FRL (&)	FRL (&)	Manufacturer
M55342^08@261#&	261,000	400 (char. E, H) or 800 (char. K, M)	E, H, K, M	B, C, W	E	S, T	P, R	DAL,MSI,SOA

M55342^08@267#&	267,000	400 (char. E, H) or 800 (char. K, M)	E, H, K, M	B, C, W	E	S, T	P, R	DAL,MSI,SOA
M55342^08@270#&	270,000	400 (char. E, H) or 800 (char. K, M)	E, H, K, M	B, C, W	H, K, N	S, T	P, R	DAL,MSI,SOA
M55342^08@274#&	274,000	400 (char. E, H) or 800 (char. K, M)	E, H, K, M	B, C, W	E	S, T	P, R	DAL,MSI,SOA
M55342^08@280#&	280,000	400 (char. E, H) or 800 (char. K, M)	E, H, K, M	B, C, W	E	S, T	P, R	DAL,MSI,SOA
M55342^08@287#&	287,000	400 (char. E, H) or 800 (char. K, M)	E, H, K, M	B, C, W	E	S, T	P, R	DAL,MSI,SOA
M55342^08@294#&	294,000	400 (char. E, H) or 800 (char. K, M)	E, H, K, M	B, C, W	E	S, T	P, R	DAL,MSI,SOA
M55342^08@300#&	300,000	400 (char. E, H) or 800 (char. K, M)	E, H, K, M	B, C, W	H, K	S, T	P, R	DAL,MSI,SOA
M55342^08@301#&	301,000	400 (char. E, H) or 800 (char. K, M)	E, H, K, M	B, C, W	E	S, T	P, R	DAL,MSI,SOA
	Resistance	Power	Char.	Term.	Res. Tol./	Level 1	Level 2	
Part Number	Value (Ohms)	Rating (mW)	(^)	Type (@)	Multiplier (#)	FRL (&)	FRL (&)	Manufacturer
M55342^08@309#&	309,000	400 (char. E, H) or 800 (char. K, M)	E, H, K, M	B, C, W	E	S, T	P, R	DAL,MSI,SOA
M55342^08@316#&	316,000	400 (char. E, H) or 800 (char. K, M)	E, H, K, M	B, C, W	E	S, T	P, R	DAL,MSI,SOA
M55342^08@324#&	324,000	400 (char. E, H) or 800 (char. K, M)	E, H, K, M	B, C, W	E	S, T	P, R	DAL,MSI,SOA
M55342^08@330#&	330,000	400 (char. E, H) or 800 (char. K, M)	E, H, K, M	B, C, W	H, K, N	S, T	P, R	DAL,MSI,SOA
M55342^08@332#&	332,000	400 (char. E, H) or 800 (char. K, M)	E, H, K, M	B, C, W	E	S, T	P, R	DAL,MSI,SOA
M55342^08@340#&	340,000	400 (char. E, H) or 800 (char. K, M)	E, H, K, M	B, C, W	E	S, T	P, R	DAL,MSI,SOA
M55342^08@348#&	348,000	400 (char. E, H) or 800 (char. K, M)	E, H, K, M	B, C, W	E	S, T	P, R	DAL,MSI,SOA
M55342^08@357#&	357,000	400 (char. E, H) or 800 (char. K, M)	E, H, K, M	B, C, W	E	S, T	P, R	DAL,MSI,SOA
M55342^08@360#&	360,000	400 (char. E, H) or 800 (char. K, M)	E, H, K, M	B, C, W	H, K	S, T	P, R	DAL,MSI,SOA
	Resistance	Power	Char.	Term.	Res. Tol./	Level 1	Level 2	
Part Number	Value (Ohms)	Rating (mW)	(^)	Type (@)	Multiplier (#)	FRL (&)	FRL (&)	Manufacturer
M55342^08@365#&	365,000	400 (char. E, H) or 800 (char. K, M)	E, H, K, M	B, C, W	E	S, T	P, R	DAL,MSI,SOA
M55342^08@374#&	374,000	400 (char. E, H) or 800 (char. K, M)	E, H, K, M	B, C, W	E	S, T	P, R	DAL,MSI,SOA
M55342^08@383#&	383,000	400 (char. E, H) or 800 (char. K, M)	E, H, K, M	B, C, W	E	S, T	P, R	DAL,MSI,SOA
M55342^08@390#&	390,000	400 (char. E, H) or 800 (char. K, M)	E, H, K, M	B, C, W	H, K, N	S, T	P, R	DAL,MSI,SOA
M55342^08@392#&	392,000	400 (char. E, H) or 800 (char. K, M)	E, H, K, M	B, C, W	E	S, T	P, R	DAL,MSI,SOA
M55342^08@402#&	402,000	400 (char. E, H) or 800 (char. K, M)	E, H, K, M	B, C, W	E	S, T	P, R	DAL,MSI,SOA
M55342^08@412#&	412,000	400 (char. E, H) or 800 (char. K, M)	E, H, K, M	B, C, W	E	S, T	P, R	DAL,MSI,SOA
M55342^08@422#&	422,000	400 (char. E, H) or 800 (char. K, M)	E, H, K, M	B, C, W	E	S, T	P, R	DAL,MSI,SOA
M55342^08@430#&	430,000	400 (char. E, H) or 800 (char. K, M)	E, H, K, M	B, C, W	H, K	S, T	P, R	DAL,MSI,SOA
	Resistance	Power	Char.	Term.	Res. Tol./	Level 1	Level 2	
Part Number	Value (Ohms)	Rating (mW)	(^)	Type (@)	Multiplier (#)	FRL (&)	FRL (&)	Manufacturer
M55342^08@432#&	432,000	400 (char. E, H) or 800 (char. K, M)	E, H, K, M	B, C, W	E	S, T	P, R	DAL,MSI,SOA
M55342^08@442#&	442,000	400 (char. E, H) or 800 (char. K, M)	E, H, K, M	B, C, W	E	S, T	P, R	DAL,MSI,SOA
M55342^08@453#&	453,000	400 (char. E, H) or 800 (char. K, M)	E, H, K, M	B, C, W	E	S, T	P, R	DAL,MSI,SOA
M55342^08@464#&	464,000	400 (char. E, H) or 800 (char. K, M)	E, H, K, M	B, C, W	E	S, T	P, R	DAL,MSI,SOA
M55342^08@470#&	470,000	400 (char. E, H) or 800 (char. K, M)	E, H, K, M	B, C, W	H, K, N	S, T	P, R	DAL,MSI,SOA
M55342^08@475#&	475,000	400 (char. E, H) or 800 (char. K, M)	E, H, K, M	B, C, W	E	S, T	P, R	DAL,MSI,SOA
M55342^08@487#&	487,000	400 (char. E, H) or 800 (char. K, M)	E, H, K, M	B, C, W	E	S, T	P, R	DAL,MSI,SOA
M55342^08@499#&	499,000	400 (char. E, H) or 800 (char. K, M)	E, H, K, M	B, C, W	E	S, T	P, R	DAL,MSI,SOA
M55342^08@510#&	510,000	400 (char. E, H) or 800 (char. K, M)	E, H, K, M	B, C, W	H, K	S, T	P, R	DAL,MSI,SOA
	Resistance	Power	Char.	Term.	Res. Tol./	Level 1	Level 2	
Part Number	Value (Ohms)	Rating (mW)	(^)	Type (@)	Multiplier (#)	FRL (&)	FRL (&)	Manufacturer
M55342^08@511#&	511,000	400 (char. E, H) or 800 (char. K, M)	E, H, K, M	B, C, W	E	S, T	P, R	DAL,MSI,SOA
M55342^08@523#&	523,000	400 (char. E, H) or 800 (char. K, M)	E, H, K, M	B, C, W	E	S, T	P, R	DAL,MSI,SOA
M55342^08@536#&	536,000	400 (char. E, H) or 800 (char. K, M)	E, H, K, M	B, C, W	E	S, T	P, R	DAL,MSI,SOA
M55342^08@549#&	549,000	400 (char. E, H) or 800 (char. K, M)	E, H, K, M	B, C, W	E	S, T	P, R	DAL,MSI,SOA

M55342^08@560#&	560,000	400 (char. E, H) or 800 (char. K, M)	E, H, K, M	B, C, W	H, K, N	S, T	P, R	DAL,MSI,SOA
M55342^08@562#&	562,000	400 (char. E, H) or 800 (char. K, M)	E, H, K, M	B, C, W	E	S, T	P, R	DAL,MSI,SOA
M55342^08@576#&	576,000	400 (char. E, H) or 800 (char. K, M)	E, H, K, M	B, C, W	E	S, T	P, R	DAL,MSI,SOA
M55342^08@590#&	590,000	400 (char. E, H) or 800 (char. K, M)	E, H, K, M	B, C, W	E	S, T	P, R	DAL,MSI,SOA
M55342^08@604#&	604,000	400 (char. E, H) or 800 (char. K, M)	E, H, K, M	B, C, W	E	S, T	P, R	DAL,MSI,SOA
	Resistance	Power	Char.	Term.	Res. Tol./	Level 1	Level 2	
Part Number	Value (Ohms)	Rating (mW)	(^)	Type (@)	Multiplier (#)	FRL (&)	FRL (&)	Manufacturer
M55342^08@619#&	619,000	400 (char. E, H) or 800 (char. K, M)	E, H, K, M	B, C, W	E	S, T	P, R	DAL,MSI,SOA
M55342^08@620#&	620,000	400 (char. E, H) or 800 (char. K, M)	E, H, K, M	B, C, W	H, K	S, T	P, R	DAL,MSI,SOA
M55342^08@634#&	634,000	400 (char. E, H) or 800 (char. K, M)	E, H, K, M	B, C, W	E	S, T	P, R	DAL,MSI,SOA
M55342^08@649#&	649,000	400 (char. E, H) or 800 (char. K, M)	E, H, K, M	B, C, W	E	S, T	P, R	DAL,MSI,SOA
M55342^08@665#&	665,000	400 (char. E, H) or 800 (char. K, M)	E, H, K, M	B, C, W	E	S, T	P, R	DAL,MSI,SOA
M55342^08@680#&	680,000	400 (char. E, H) or 800 (char. K, M)	E, H, K, M	B, C, W	H, K, N	S, T	P, R	DAL,MSI,SOA
M55342^08@681#&	681,000	400 (char. E, H) or 800 (char. K, M)	E, H, K, M	B, C, W	E	S, T	P, R	DAL,MSI,SOA
M55342^08@698#&	698,000	400 (char. E, H) or 800 (char. K, M)	E, H, K, M	B, C, W	E	S, T	P, R	DAL,MSI,SOA
M55342^08@715#&	715,000	400 (char. E, H) or 800 (char. K, M)	E, H, K, M	B, C, W	E	S, T	P, R	DAL,MSI,SOA
	Resistance	Power	Char.	Term.	Res. Tol./	Level 1	Level 2	
Part Number	Value (Ohms)	Rating (mW)	(^)	Type (@)	Multiplier (#)	FRL (&)	FRL (&)	Manufacturer
M55342^08@732#&	732,000	400 (char. E, H) or 800 (char. K, M)	E, H, K, M	B, C, W	E	S, T	P, R	DAL,MSI,SOA
M55342^08@750#&	750,000	400 (char. E, H) or 800 (char. K, M)	E, H, K, M	B, C, W	E, H, K	S, T	P, R	DAL,MSI,SOA
M55342^08@768#&	768,000	400 (char. E, H) or 800 (char. K, M)	E, H, K, M	B, C, W	E	S, T	P, R	DAL,MSI,SOA
M55342^08@787#&	787,000	400 (char. E, H) or 800 (char. K, M)	E, H, K, M	B, C, W	E	S, T	P, R	DAL,MSI,SOA
M55342^08@806#&	806,000	400 (char. E, H) or 800 (char. K, M)	E, H, K, M	B, C, W	E	S, T	P, R	DAL,MSI,SOA
M55342^08@820#&	820,000	400 (char. E, H) or 800 (char. K, M)	E, H, K, M	B, C, W	H, K, N	S, T	P, R	DAL,MSI,SOA
M55342^08@825#&	825,000	400 (char. E, H) or 800 (char. K, M)	E, H, K, M	B, C, W	E	S, T	P, R	DAL,MSI,SOA
M55342^08@845#&	845,000	400 (char. E, H) or 800 (char. K, M)	E, H, K, M	B, C, W	E	S, T	P, R	DAL,MSI,SOA
M55342^08@866#&	866,000	400 (char. E, H) or 800 (char. K, M)	E, H, K, M	B, C, W	E	S, T	P, R	DAL,MSI,SOA
	Resistance	Power	Char.	Term.	Res. Tol./	Level 1	Level 2	
Part Number	Value (Ohms)	Rating (mW)	(^)	Type (@)	Multiplier (#)	FRL (&)	FRL (&)	Manufacturer
M55342^08@887#&	887,000	400 (char. E, H) or 800 (char. K, M)	E, H, K, M	B, C, W	E	S, T	P, R	DAL,MSI,SOA
M55342^08@909#&	909,000	400 (char. E, H) or 800 (char. K, M)	E, H, K, M	B, C, W	E	S, T	P, R	DAL,MSI,SOA
M55342^08@910#&	910,000	400 (char. E, H) or 800 (char. K, M)	E, H, K, M	B, C, W	H, K	S, T	P, R	DAL,MSI,SOA
M55342^08@931#&	931,000	400 (char. E, H) or 800 (char. K, M)	E, H, K, M	B, C, W	E	S, T	P, R	DAL,MSI,SOA
M55342^08@953#&	953,000	400 (char. E, H) or 800 (char. K, M)	E, H, K, M	B, C, W	E	S, T	P, R	DAL,MSI,SOA
M55342^08@976#&	976,000	400 (char. E, H) or 800 (char. K, M)	E, H, K, M	B, C, W	E	S, T	P, R	DAL,MSI,SOA
	Resistance	Power	Char.	Term.	Res. Tol./	Level 1	Level 2	
Part Number	Value (Ohms)	Rating (mW)	(^)	Type (@)	Multiplier (#)	FRL (&)	FRL (&)	Manufacturer

MIL-PRF-55342/8 (RM2010) Film Chip Resistors: 1,000,000 Ohms Through 9,760,000 Ohms

	Resistance	Power	Char.	Term.	Res. Tol./	Level 1	Level 2	
Part Number	Value (Ohms)	Rating (mW)	(^)	Type (@)	Multiplier (#)	FRL (&)	FRL (&)	Manufacturer
M55342^08@1#00&	1,000,000	400 (char. E, H) or 800 (char. K, M)	E, H, K, M	B, C, W	F, T, L, P	S, T	P, R	DAL,MSI,SOA
M55342^08@1#02&	1,020,000	400 (char. E, H) or 800 (char. K, M)	E, H, K, M	B, C, W	F	S, T	P, R	DAL,MSI,SOA
M55342^08@1#05&	1,050,000	400 (char. E, H) or 800 (char. K, M)	E, H, K, M	B, C, W	F	S, T	P, R	DAL,MSI,SOA

M55342^08@1#07&	1,070,000	400 (char. E, H) or 800 (char. K, M)	E, H, K, M	B, C, W	F	S, T	P, R	DAL,MSI,SOA
M55342^08@1#10&	1,100,000	400 (char. E, H) or 800 (char. K, M)	E, H, K, M	B, C, W	F, T, L	S, T	P, R	DAL,MSI,SOA
M55342^08@1#13&	1,130,000	400 (char. E, H) or 800 (char. K, M)	E, H, K, M	B, C, W	F	S, T	P, R	DAL,MSI,SOA
M55342^08@1#15&	1,150,000	400 (char. E, H) or 800 (char. K, M)	E, H, K, M	B, C, W	F	S, T	P, R	DAL,MSI,SOA
M55342^08@1#18&	1,180,000	400 (char. E, H) or 800 (char. K, M)	E, H, K, M	B, C, W	F	S, T	P, R	DAL,MSI,SOA
M55342^08@1#20&	1,200,000	400 (char. E, H) or 800 (char. K, M)	E, H, K, M	B, C, W	T, L, P	S, T	P, R	DAL,MSI,SOA
	Resistance	Power	Char.	Term.	Res. Tol./	Level 1	Level 2	
Part Number	Value (Ohms)	Rating (mW)	(^)	Type (@)	Multiplier (#)	FRL (&)	FRL (&)	Manufacturer
M55342^08@1#21&	1,210,000	400 (char. E, H) or 800 (char. K, M)	E, H, K, M	B, C, W	F	S, T	P, R	DAL,MSI,SOA
M55342^08@1#24&	1,240,000	400 (char. E, H) or 800 (char. K, M)	E, H, K, M	B, C, W	F	S, T	P, R	DAL,MSI,SOA
M55342^08@1#27&	1,270,000	400 (char. E, H) or 800 (char. K, M)	E, H, K, M	B, C, W	F	S, T	P, R	DAL,MSI,SOA
M55342^08@1#30&	1,300,000	400 (char. E, H) or 800 (char. K, M)	E, H, K, M	B, C, W	F, T, L	S, T	P, R	DAL,MSI,SOA
M55342^08@1#33&	1,330,000	400 (char. E, H) or 800 (char. K, M)	E, H, K, M	B, C, W	F	S, T	P, R	DAL,MSI,SOA
M55342^08@1#37&	1,370,000	400 (char. E, H) or 800 (char. K, M)	E, H, K, M	B, C, W	F	S, T	P, R	DAL,MSI,SOA
M55342^08@1#40&	1,400,000	400 (char. E, H) or 800 (char. K, M)	E, H, K, M	B, C, W	F	S, T	P, R	DAL,MSI,SOA
M55342^08@1#43&	1,430,000	400 (char. E, H) or 800 (char. K, M)	E, H, K, M	B, C, W	F	S, T	P, R	DAL,MSI,SOA
M55342^08@1#47&	1,470,000	400 (char. E, H) or 800 (char. K, M)	E, H, K, M	B, C, W	F	S, T	P, R	DAL,MSI,SOA
	Resistance	Power	Char.	Term.	Res. Tol./	Level 1	Level 2	
Part Number	Value (Ohms)	Rating (mW)	(^)	Type (@)	Multiplier (#)	FRL (&)	FRL (&)	Manufacturer
M55342^08@1#50&	1,500,000	400 (char. E, H) or 800 (char. K, M)	E, H, K, M	B, C, W	F, T, L, P	S, T	P, R	DAL,MSI,SOA
M55342^08@1#54&	1,540,000	400 (char. E, H) or 800 (char. K, M)	E, H, K, M	B, C, W	F	S, T	P, R	DAL,MSI,SOA
M55342^08@1#58&	1,580,000	400 (char. E, H) or 800 (char. K, M)	E, H, K, M	B, C, W	F	S, T	P, R	DAL,MSI,SOA
M55342^08@1#60&	1,600,000	400 (char. E, H) or 800 (char. K, M)	E, H, K, M	B, C, W	T, L	S, T	P, R	DAL,MSI,SOA
M55342^08@1#62&	1,620,000	400 (char. E, H) or 800 (char. K, M)	E, H, K, M	B, C, W	F	S, T	P, R	DAL,MSI,SOA
M55342^08@1#65&	1,650,000	400 (char. E, H) or 800 (char. K, M)	E, H, K, M	B, C, W	F	S, T	P, R	DAL,MSI,SOA
M55342^08@1#69&	1,690,000	400 (char. E, H) or 800 (char. K, M)	E, H, K, M	B, C, W	F	S, T	P, R	DAL,MSI,SOA
M55342^08@1#74&	1,740,000	400 (char. E, H) or 800 (char. K, M)	E, H, K, M	B, C, W	F	S, T	P, R	DAL,MSI,SOA
M55342^08@1#78&	1,780,000	400 (char. E, H) or 800 (char. K, M)	E, H, K, M	B, C, W	F	S, T	P, R	DAL,MSI,SOA
	Resistance	Power	Char.	Term.	Res. Tol./	Level 1	Level 2	
Part Number	Value (Ohms)	Rating (mW)	(^)	Type (@)	Multiplier (#)	FRL (&)	FRL (&)	Manufacturer
M55342^08@1#80&	1,800,000	400 (char. E, H) or 800 (char. K, M)	E, H, K, M	B, C, W	T, L, P	S, T	P, R	DAL,MSI,SOA
M55342^08@1#82&	1,820,000	400 (char. E, H) or 800 (char. K, M)	E, H, K, M	B, C, W	F	S, T	P, R	DAL,MSI,SOA
M55342^08@1#87&	1,870,000	400 (char. E, H) or 800 (char. K, M)	E, H, K, M	B, C, W	F	S, T	P, R	DAL,MSI,SOA
M55342^08@1#91&	1,910,000	400 (char. E, H) or 800 (char. K, M)	E, H, K, M	B, C, W	F	S, T	P, R	DAL,MSI,SOA
M55342^08@1#96&	1,960,000	400 (char. E, H) or 800 (char. K, M)	E, H, K, M	B, C, W	F	S, T	P, R	DAL,MSI,SOA
M55342^08@2#00&	2,000,000	400 (char. E, H) or 800 (char. K, M)	E, H, K, M	B, C, W	F, T, L, P	S, T	P, R	DAL,MSI,SOA
M55342^08@2#05&	2,050,000	400 (char. E, H) or 800 (char. K, M)	E, H, K, M	B, C, W	F	S, T	P, R	DAL,MSI,SOA
M55342^08@2#10&	2,100,000	400 (char. E, H) or 800 (char. K, M)	E, H, K, M	B, C, W	F	S, T	P, R	DAL,MSI,SOA
M55342^08@2#15&	2,150,000	400 (char. E, H) or 800 (char. K, M)	E, H, K, M	B, C, W	F	S, T	P, R	DAL,MSI,SOA
	Resistance	Power	Char.	Term.	Res. Tol./	Level 1	Level 2	
Part Number	Value (Ohms)	Rating (mW)	(^)	Type (@)	Multiplier (#)	FRL (&)	FRL (&)	Manufacturer
M55342^08@2#20&	2,200,000	400 (char. E, H) or 800 (char. K, M)	E, H, K, M	B, C, W	T, L, P	S, T	P, R	DAL,MSI,SOA
M55342^08@2#21&	2,210,000	400 (char. E, H) or 800 (char. K, M)	E, H, K, M	B, C, W	F	S, T	P, R	DAL,MSI,SOA
M55342^08@2#26&	2,260,000	400 (char. E, H) or 800 (char. K, M)	E, H, K, M	B, C, W	F	S, T	P, R	DAL,MSI,SOA
M55342^08@2#32&	2,320,000	400 (char. E, H) or 800 (char. K, M)	E, H, K, M	B, C, W	F	S, T	P, R	DAL,MSI,SOA
M55342^08@2#37&	2,370,000	400 (char. E, H) or 800 (char. K, M)	E, H, K, M	B, C, W	F	S, T	P, R	DAL,MSI,SOA
M55342^08@2#40&	2,400,000	400 (char. E, H) or 800 (char. K, M)	E, H, K, M	B, C, W	T, L	S, T	P, R	DAL,MSI,SOA

M55342^08@2#43&	2,430,000	400 (char. E, H) or 800 (char. K, M)	E, H, K, M	B, C, W	F	S, T	P, R	DAL,MSI,SOA
M55342^08@2#49&	2,490,000	400 (char. E, H) or 800 (char. K, M)	E, H, K, M	B, C, W	F	S, T	P, R	DAL,MSI,SOA
M55342^08@2#55&	2,550,000	400 (char. E, H) or 800 (char. K, M)	E, H, K, M	B, C, W	F	S, T	P, R	DAL,MSI,SOA
	Resistance	Power	Char.	Term.	Res. Tol./	Level 1	Level 2	
Part Number	Value (Ohms)	Rating (mW)	(^)	Type (@)	Multiplier (#)	FRL (&)	FRL (&)	Manufacturer
M55342^08@2#61&	2,610,000	400 (char. E, H) or 800 (char. K, M)	E, H, K, M	B, C, W	F	S, T	P, R	DAL,MSI,SOA
M55342^08@2#67&	2,670,000	400 (char. E, H) or 800 (char. K, M)	E, H, K, M	B, C, W	F	S, T	P, R	DAL,MSI,SOA
M55342^08@2#70&	2,700,000	400 (char. E, H) or 800 (char. K, M)	E, H, K, M	B, C, W	T, L, P	S, T	P, R	DAL,MSI,SOA
M55342^08@2#74&	2,740,000	400 (char. E, H) or 800 (char. K, M)	E, H, K, M	B, C, W	F	S, T	P, R	DAL,MSI,SOA
M55342^08@2#80&	2,800,000	400 (char. E, H) or 800 (char. K, M)	E, H, K, M	B, C, W	F	S, T	P, R	DAL,MSI,SOA
M55342^08@2#87&	2,870,000	400 (char. E, H) or 800 (char. K, M)	E, H, K, M	B, C, W	F	S, T	P, R	DAL,MSI,SOA
M55342^08@2#94&	2,940,000	400 (char. E, H) or 800 (char. K, M)	E, H, K, M	B, C, W	F	S, T	P, R	DAL,MSI,SOA
M55342^08@3#00&	3,000,000	400 (char. E, H) or 800 (char. K, M)	E, H, K, M	B, C, W	T, L	S, T	P, R	DAL,MSI,SOA
M55342^08@3#01&	3,010,000	400 (char. E, H) or 800 (char. K, M)	E, H, K, M	B, C, W	F	S, T	P, R	DAL,MSI,SOA
	Resistance	Power	Char.	Term.	Res. Tol./	Level 1	Level 2	
Part Number	Value (Ohms)	Rating (mW)	(^)	Type (@)	Multiplier (#)	FRL (&)	FRL (&)	Manufacturer
M55342^08@3#09&	3,090,000	400 (char. E, H) or 800 (char. K, M)	E, H, K, M	B, C, W	F	S, T	P, R	DAL,MSI,SOA
M55342^08@3#16&	3,160,000	400 (char. E, H) or 800 (char. K, M)	E, H, K, M	B, C, W	F	S, T	P, R	DAL,MSI,SOA
M55342^08@3#24&	3,240,000	400 (char. E, H) or 800 (char. K, M)	E, H, K, M	B, C, W	F	S, T	P, R	DAL,MSI,SOA
M55342^08@3#30&	3,300,000	400 (char. E, H) or 800 (char. K, M)	E, H, K, M	B, C, W	T, L, P	S, T	P, R	DAL,MSI,SOA
M55342^08@3#32&	3,320,000	400 (char. E, H) or 800 (char. K, M)	E, H, K, M	B, C, W	F	S, T	P, R	DAL,MSI,SOA
M55342^08@3#40&	3,400,000	400 (char. E, H) or 800 (char. K, M)	E, H, K, M	B, C, W	F	S, T	P, R	DAL,MSI,SOA
M55342^08@3#48&	3,480,000	400 (char. E, H) or 800 (char. K, M)	E, H, K, M	B, C, W	F	S, T	P, R	DAL,MSI,SOA
M55342^08@3#57&	3,570,000	400 (char. E, H) or 800 (char. K, M)	E, H, K, M	B, C, W	F	S, T	P, R	DAL,MSI,SOA
M55342^08@3#60&	3,600,000	400 (char. E, H) or 800 (char. K, M)	E, H, K, M	B, C, W	T, L	S, T	P, R	DAL,MSI,SOA
	Resistance	Power	Char.	Term.	Res. Tol./	Level 1	Level 2	
Part Number	Value (Ohms)	Rating (mW)	(^)	Type (@)	Multiplier (#)	FRL (&)	FRL (&)	Manufacturer
M55342^08@3#65&	3,650,000	400 (char. E, H) or 800 (char. K, M)	E, H, K, M	B, C, W	F	S, T	P, R	DAL,MSI,SOA
M55342^08@3#74&	3,740,000	400 (char. E, H) or 800 (char. K, M)	E, H, K, M	B, C, W	F	S, T	P, R	DAL,MSI,SOA
M55342^08@3#83&	3,830,000	400 (char. E, H) or 800 (char. K, M)	E, H, K, M	B, C, W	F	S, T	P, R	DAL,MSI,SOA
M55342^08@3#90&	3,900,000	400 (char. E, H) or 800 (char. K, M)	E, H, K, M	B, C, W	T, L, P	S, T	P, R	DAL,MSI,SOA
M55342^08@3#92&	3,920,000	400 (char. E, H) or 800 (char. K, M)	E, H, K, M	B, C, W	F	S, T	P, R	DAL,MSI,SOA
M55342^08@4#02&	4,020,000	400 (char. E, H) or 800 (char. K, M)	E, H, K, M	B, C, W	F	S, T	P, R	DAL,MSI,SOA
M55342^08@4#12&	4,120,000	400 (char. E, H) or 800 (char. K, M)	E, H, K, M	B, C, W	F	S, T	P, R	DAL,MSI,SOA
M55342^08@4#22&	4,220,000	400 (char. E, H) or 800 (char. K, M)	E, H, K, M	B, C, W	F	S, T	P, R	DAL,MSI,SOA
M55342^08@4#30&	4,300,000	400 (char. E, H) or 800 (char. K, M)	E, H, K, M	B, C, W	T, L	S, T	P, R	DAL,MSI,SOA
	Resistance	Power	Char.	Term.	Res. Tol./	Level 1	Level 2	
Part Number	Value (Ohms)	Rating (mW)	(^)	Type (@)	Multiplier (#)	FRL (&)	FRL (&)	Manufacturer
M55342^08@4#32&	4,320,000	400 (char. E, H) or 800 (char. K, M)	E, H, K, M	B, C, W	F	S, T	P, R	DAL,MSI,SOA
M55342^08@4#42&	4,420,000	400 (char. E, H) or 800 (char. K, M)	E, H, K, M	B, C, W	F	S, T	P, R	DAL,MSI,SOA
M55342^08@4#53&	4,530,000	400 (char. E, H) or 800 (char. K, M)	E, H, K, M	B, C, W	F	S, T	P, R	DAL,MSI,SOA
M55342^08@4#64&	4,640,000	400 (char. E, H) or 800 (char. K, M)	E, H, K, M	B, C, W	F	S, T	P, R	DAL,MSI,SOA
M55342^08@4#70&	4,700,000	400 (char. E, H) or 800 (char. K, M)	E, H, K, M	B, C, W	T, L, P	S, T	P, R	DAL,MSI,SOA
M55342^08@4#75&	4,750,000	400 (char. E, H) or 800 (char. K, M)	E, H, K, M	B, C, W	F	S, T	P, R	DAL,MSI,SOA
M55342^08@4#87&	4,870,000	400 (char. E, H) or 800 (char. K, M)	E, H, K, M	B, C, W	F	S, T	P, R	DAL,MSI,SOA
M55342^08@4#99&	4,990,000	400 (char. E, H) or 800 (char. K, M)	E, H, K, M	B, C, W	F	S, T	P, R	DAL,MSI,SOA
M55342^08@5#10&	5,100,000	400 (char. E, H) or 800 (char. K, M)	E, H, K, M	B, C, W	T, L	S, T	P, R	DAL,MSI,SOA

	Resistance	Power	Char.	Term.	Res. Tol./	Level 1	Level 2	
Part Number	Value (Ohms)	Rating (mW)	(^)	Type (@)	Multiplier (#)	FRL (&)	FRL (&)	Manufacturer
M55342^08@5#11&	5,110,000	400 (char. E, H) or 800 (char. K, M)	E, H, K, M	B, C, W	F	S, T	P, R	DAL,MSI,SOA
M55342^08@5#23&	5,230,000	400 (char. E, H) or 800 (char. K, M)	E, H, K, M	B, C, W	F	S, T	P, R	DAL,MSI,SOA
M55342^08@5#36&	5,360,000	400 (char. E, H) or 800 (char. K, M)	E, H, K, M	B, C, W	F	S, T	P, R	DAL,MSI,SOA
M55342^08@5#49&	5,490,000	400 (char. E, H) or 800 (char. K, M)	E, H, K, M	B, C, W	F	S, T	P, R	DAL,MSI,SOA
M55342^08@5#60&	5,600,000	400 (char. E, H) or 800 (char. K, M)	E, H, K, M	B, C, W	T, L, P	S, T	P, R	DAL,MSI,SOA
M55342^08@5#62&	5,620,000	400 (char. E, H) or 800 (char. K, M)	E, H, K, M	B, C, W	F	S, T	P, R	DAL,MSI,SOA
M55342^08@5#76&	5,760,000	400 (char. E, H) or 800 (char. K, M)	E, H, K, M	B, C, W	F	S, T	P, R	DAL,MSI,SOA
M55342^08@5#90&	5,900,000	400 (char. E, H) or 800 (char. K, M)	E, H, K, M	B, C, W	F	S, T	P, R	DAL,MSI,SOA
M55342^08@6#04&	6,040,000	400 (char. E, H) or 800 (char. K, M)	E, H, K, M	B, C, W	F	S, T	P, R	DAL,MSI,SOA
	Resistance	Power	Char.	Term.	Res. Tol./	Level 1	Level 2	
Part Number	Value (Ohms)	Rating (mW)	(^)	Type (@)	Multiplier (#)	FRL (&)	FRL (&)	Manufacturer
M55342^08@6#19&	6,190,000	400 (char. E, H) or 800 (char. K, M)	E, H, K, M	B, C, W	F	S, T	P, R	DAL,MSI,SOA
M55342^08@6#20&	6,200,000	400 (char. E, H) or 800 (char. K, M)	E, H, K, M	B, C, W	T, L	S, T	P, R	DAL,MSI,SOA
M55342^08@6#34&	6,340,000	400 (char. E, H) or 800 (char. K, M)	E, H, K, M	B, C, W	F	S, T	P, R	DAL,MSI,SOA
M55342^08@6#49&	6,490,000	400 (char. E, H) or 800 (char. K, M)	E, H, K, M	B, C, W	F	S, T	P, R	DAL,MSI,SOA
M55342^08@6#65&	6,650,000	400 (char. E, H) or 800 (char. K, M)	E, H, K, M	B, C, W	F	S, T	P, R	DAL,MSI,SOA
M55342^08@6#80&	6,800,000	400 (char. E, H) or 800 (char. K, M)	E, H, K, M	B, C, W	T, L, P	S, T	P, R	DAL,MSI,SOA
M55342^08@6#81&	6,810,000	400 (char. E, H) or 800 (char. K, M)	E, H, K, M	B, C, W	F	S, T	P, R	DAL,MSI,SOA
M55342^08@6#98&	6,980,000	400 (char. E, H) or 800 (char. K, M)	E, H, K, M	B, C, W	F	S, T	P, R	DAL,MSI,SOA
M55342^08@7#15&	7,150,000	400 (char. E, H) or 800 (char. K, M)	E, H, K, M	B, C, W	F	S, T	P, R	DAL,MSI,SOA
	Resistance	Power	Char.	Term.	Res. Tol./	Level 1	Level 2	
Part Number	Value (Ohms)	Rating (mW)	(^)	Type (@)	Multiplier (#)	FRL (&)	FRL (&)	Manufacturer
M55342^08@7#32&	7,320,000	400 (char. E, H) or 800 (char. K, M)	E, H, K, M	B, C, W	F	S, T	P, R	DAL,MSI,SOA
M55342^08@7#50&	7,500,000	400 (char. E, H) or 800 (char. K, M)	E, H, K, M	B, C, W	F, T, L	S, T	P, R	DAL,MSI,SOA
M55342^08@7#68&	7,680,000	400 (char. E, H) or 800 (char. K, M)	E, H, K, M	B, C, W	F	S, T	P, R	DAL,MSI,SOA
M55342^08@7#87&	7,870,000	400 (char. E, H) or 800 (char. K, M)	E, H, K, M	B, C, W	F	S, T	P, R	DAL,MSI,SOA
M55342^08@8#06&	8,060,000	400 (char. E, H) or 800 (char. K, M)	E, H, K, M	B, C, W	F	S, T	P, R	DAL,MSI,SOA
M55342^08@8#20&	8,200,000	400 (char. E, H) or 800 (char. K, M)	E, H, K, M	B, C, W	T, L, P	S, T	P, R	DAL,MSI,SOA
M55342^08@8#25&	8,250,000	400 (char. E, H) or 800 (char. K, M)	E, H, K, M	B, C, W	F	S, T	P, R	DAL,MSI,SOA
M55342^08@8#45&	8,450,000	400 (char. E, H) or 800 (char. K, M)	E, H, K, M	B, C, W	F	S, T	P, R	DAL,MSI,SOA
M55342^08@8#66&	8,660,000	400 (char. E, H) or 800 (char. K, M)	E, H, K, M	B, C, W	F	S, T	P, R	DAL,MSI,SOA
	Resistance	Power	Char.	Term.	Res. Tol./	Level 1	Level 2	
Part Number	Value (Ohms)	Rating (mW)	(^)	Type (@)	Multiplier (#)	FRL (&)	FRL (&)	Manufacturer
M55342^08@8#87&	8,870,000	400 (char. E, H) or 800 (char. K, M)	E, H, K, M	B, C, W	F	S, T	P, R	DAL,MSI,SOA
M55342^08@9#09&	9,090,000	400 (char. E, H) or 800 (char. K, M)	E, H, K, M	B, C, W	F	S, T	P, R	DAL,MSI,SOA
M55342^08@9#10&	9,100,000	400 (char. E, H) or 800 (char. K, M)	E, H, K, M	B, C, W	T, L	S, T	P, R	DAL,MSI,SOA
M55342^08@9#31&	9,310,000	400 (char. E, H) or 800 (char. K, M)	E, H, K, M	B, C, W	F	S, T	P, R	DAL,MSI,SOA
M55342^08@9#53&	9,530,000	400 (char. E, H) or 800 (char. K, M)	E, H, K, M	B, C, W	F	S, T	P, R	DAL,MSI,SOA
M55342^08@9#76&	9,760,000	400 (char. E, H) or 800 (char. K, M)	E, H, K, M	B, C, W	F	S, T	P, R	DAL,MSI,SOA
	Resistance	Power	Char.	Term.	Res. Tol./	Level 1	Level 2	
Part Number	Value (Ohms)	Rating (mW)	(^)	Type (@)	Multiplier (#)	FRL (&)	FRL (&)	Manufacturer

	Resistance	Power	Char.	Term.	Res. Tol./	Level 1	Level 2	
Part Number	Value (Ohms)	Rating (mW)	(^)	Type (@)	Multiplier (#)	FRL (&)	FRL (&)	Manufacturer
M55342^08@10#0&	10,000,000	400 (char. E, H) or 800 (char. K, M)	E, H, K, M	B, C, W	T, L, P	S, T	P, R	DAL,MSI,SOA
M55342^08@10#2&	10,200,000	400 (char. E, H) or 800 (char. K, M)	E, H, K, M	B, C, W	F	S, T	P, R	DAL,MSI,SOA
M55342^08@10#5&	10,500,000	400 (char. E, H) or 800 (char. K, M)	E, H, K, M	B, C, W	F	S, T	P, R	DAL,MSI,SOA
M55342^08@10#7&	10,700,000	400 (char. E, H) or 800 (char. K, M)	E, H, K, M	B, C, W	F	S, T	P, R	DAL,MSI,SOA
M55342^08@11#0&	11,000,000	400 (char. E, H) or 800 (char. K, M)	E, H, K, M	B, C, W	T, L	S, T	P, R	DAL,MSI,SOA
M55342^08@11#3&	11,300,000	400 (char. E, H) or 800 (char. K, M)	E, H, K, M	B, C, W	F	S, T	P, R	DAL,MSI,SOA
M55342^08@11#5&	11,500,000	400 (char. E, H) or 800 (char. K, M)	E, H, K, M	B, C, W	F	S, T	P, R	DAL,MSI,SOA
M55342^08@11#8&	11,800,000	400 (char. E, H) or 800 (char. K, M)	E, H, K, M	B, C, W	F	S, T	P, R	DAL,MSI,SOA
M55342^08@12#0&	12,000,000	400 (char. E, H) or 800 (char. K, M)	E, H, K, M	B, C, W	T, L, P	S, T	P, R	DAL,MSI,SOA
	Resistance	Power	Char.	Term.	Res. Tol./	Level 1	Level 2	
Part Number	Value (Ohms)	Rating (mW)	(^)	Type (@)	Multiplier (#)	FRL (&)	FRL (&)	Manufacturer
M55342^08@12#1&	12,100,000	400 (char. E, H) or 800 (char. K, M)	E, H, K, M	B, C, W	F	S, T	P, R	DAL,MSI,SOA
M55342^08@12#4&	12,400,000	400 (char. E, H) or 800 (char. K, M)	E, H, K, M	B, C, W	F	S, T	P, R	DAL,MSI,SOA
M55342^08@12#7&	12,700,000	400 (char. E, H) or 800 (char. K, M)	E, H, K, M	B, C, W	F	S, T	P, R	DAL,MSI,SOA
M55342^08@13#0&	13,000,000	400 (char. E, H) or 800 (char. K, M)	E, H, K, M	B, C, W	T, L	S, T	P, R	DAL,MSI,SOA
M55342^08@13#3&	13,300,000	400 (char. E, H) or 800 (char. K, M)	E, H, K, M	B, C, W	F	S, T	P, R	DAL,MSI,SOA
M55342^08@13#7&	13,700,000	400 (char. E, H) or 800 (char. K, M)	E, H, K, M	B, C, W	F	S, T	P, R	DAL,MSI,SOA
M55342^08@14#0&	14,000,000	400 (char. E, H) or 800 (char. K, M)	E, H, K, M	B, C, W	F	S, T	P, R	DAL,MSI,SOA
M55342^08@14#3&	14,300,000	400 (char. E, H) or 800 (char. K, M)	E, H, K, M	B, C, W	F	S, T	P, R	DAL,MSI,SOA
M55342^08@14#7&	14,700,000	400 (char. E, H) or 800 (char. K, M)	E, H, K, M	B, C, W	F	S, T	P, R	DAL,MSI,SOA
M55342^08@15#0&	15,000,000	400 (char. E, H) or 800 (char. K, M)	E, H, K, M	B, C, W	T, L, P	S, T	P, R	DAL,MSI,SOA
	Resistance	Power	Char.	Term.	Res. Tol./	Level 1	Level 2	
Part Number	Value (Ohms)	Rating (mW)	(^)	Type (@)	Multiplier (#)	FRL (&)	FRL (&)	Manufacturer

MIL-PRF-55342/5 (RM2208) Film Chip Resistors

5.60 Ohms Through 15,000,000 Ohms

	Resistance	Power	Char.	Term.	Resistance Tol./	Level 1	Level 2	
Part Number	Value (Ohms)	Rating (mW)	(^)	Type (@)	Multiplier (#)	FRL (&)	FRL (&)	Manufacturer
M55342^05@5#60&	5.60	200 (char. E, H) or 225 (char. K, M)	E, H, K, M	B, C, W	G, J, M	S	P, R	DAL,MSI,SOA
M55342^05@5#62&	5.62	200 (char. E, H) or 225 (char. K, M)	E, H, K, M	B, C, W	D	S	P, R	DAL,MSI,SOA
M55342^05@5#76&	5.76	200 (char. E, H) or 225 (char. K, M)	E, H, K, M	B, C, W	D	S	P, R	DAL,MSI,SOA
M55342^05@5#90&	5.90	200 (char. E, H) or 225 (char. K, M)	E, H, K, M	B, C, W	D	S	P, R	DAL,MSI,SOA
M55342^05@6#04&	6.04	200 (char. E, H) or 225 (char. K, M)	E, H, K, M	B, C, W	D	S	P, R	DAL,MSI,SOA
M55342^05@6#19&	6.19	200 (char. E, H) or 225 (char. K, M)	E, H, K, M	B, C, W	D	S	P, R	DAL,MSI,SOA
M55342^05@6#20&	6.20	200 (char. E, H) or 225 (char. K, M)	E, H, K, M	B, C, W	G, J	S	P, R	DAL,MSI,SOA
M55342^05@6#34&	6.34	200 (char. E, H) or 225 (char. K, M)	E, H, K, M	B, C, W	D	S	P, R	DAL,MSI,SOA
M55342^05@6#49&	6.49	200 (char. E, H) or 225 (char. K, M)	E, H, K, M	B, C, W	D	S	P, R	DAL,MSI,SOA
M55342^05@6#65&	6.65	200 (char. E, H) or 225 (char. K, M)	E, H, K, M	B, C, W	D	S	P, R	DAL,MSI,SOA
M55342^05@6#80&	6.80	200 (char. E, H) or 225 (char. K, M)	E, H, K, M	B, C, W	G, J, M	S	P, R	DAL,MSI,SOA
M55342^05@6#81&	6.81	200 (char. E, H) or 225 (char. K, M)	E, H, K, M	B, C, W	D	S	P, R	DAL,MSI,SOA

M55342^05@6#98&	6.98	200 (char. E, H) or 225 (char. K, M)	E, H, K, M	B, C, W	D	S	P, R	DAL,MSI,SOA
M55342^05@7#15&	7.15	200 (char. E, H) or 225 (char. K, M)	E, H, K, M	B, C, W	D	S	P, R	DAL,MSI,SOA
M55342^05@7#32&	7.32	200 (char. E, H) or 225 (char. K, M)	E, H, K, M	B, C, W	D	S	P, R	DAL,MSI,SOA
M55342^05@7#50&	7.50	200 (char. E, H) or 225 (char. K, M)	E, H, K, M	B, C, W	D, G, J	S	P, R	DAL,MSI,SOA
M55342^05@7#68&	7.68	200 (char. E, H) or 225 (char. K, M)	E, H, K, M	B, C, W	D	S	P, R	DAL,MSI,SOA
M55342^05@7#87&	7.87	200 (char. E, H) or 225 (char. K, M)	E, H, K, M	B, C, W	D	S	P, R	DAL,MSI,SOA
M55342^05@8#06&	8.06	200 (char. E, H) or 225 (char. K, M)	E, H, K, M	B, C, W	D	S	P, R	DAL,MSI,SOA
M55342^05@8#20&	8.20	200 (char. E, H) or 225 (char. K, M)	E, H, K, M	B, C, W	G, J, M	S	P, R	DAL,MSI,SOA
M55342^05@8#25&	8.25	200 (char. E, H) or 225 (char. K, M)	E, H, K, M	B, C, W	D	S	P, R	DAL,MSI,SOA
M55342^05@8#45&	8.45	200 (char. E, H) or 225 (char. K, M)	E, H, K, M	B, C, W	D	S	P, R	DAL,MSI,SOA
M55342^05@8#66&	8.66	200 (char. E, H) or 225 (char. K, M)	E, H, K, M	B, C, W	D	S	P, R	DAL,MSI,SOA
M55342^05@8#87&	8.87	200 (char. E, H) or 225 (char. K, M)	E, H, K, M	B, C, W	D	S	P, R	DAL,MSI,SOA
M55342^05@9#09&	9.09	200 (char. E, H) or 225 (char. K, M)	E, H, K, M	B, C, W	D	S	P, R	DAL,MSI,SOA
M55342^05@9#10&	9.10	200 (char. E, H) or 225 (char. K, M)	E, H, K, M	B, C, W	G, J	S	P, R	DAL,MSI,SOA
M55342^05@9#31&	9.31	200 (char. E, H) or 225 (char. K, M)	E, H, K, M	B, C, W	D	S	P, R	DAL,MSI,SOA
M55342^05@9#53&	9.53	200 (char. E, H) or 225 (char. K, M)	E, H, K, M	B, C, W	D	S	P, R	DAL,MSI,SOA
M55342^05@9#76&	9.76	200 (char. E, H) or 225 (char. K, M)	E, H, K, M	B, C, W	D	S	P, R	DAL,MSI,SOA
M55342^05@10#0&	10.0	200 (char. E, H) or 225 (char. K, M)	E, H, K, M	B, C, W	D, G, J, M	S	P, R	DAL,MSI,SOA
M55342^05@10#2&	10.2	200 (char. E, H) or 225 (char. K, M)	E, H, K, M	B, C, W	D	S	P, R	DAL,MSI,SOA
M55342^05@10#5&	10.5	200 (char. E, H) or 225 (char. K, M)	E, H, K, M	B, C, W	D	S	P, R	DAL,MSI,SOA
M55342^05@10#7&	10.7	200 (char. E, H) or 225 (char. K, M)	E, H, K, M	B, C, W	D	S	P, R	DAL,MSI,SOA
M55342^05@11#0&	11.0	200 (char. E, H) or 225 (char. K, M)	E, H, K, M	B, C, W	D, G, J	S	P, R	DAL,MSI,SOA
M55342^05@11#3&	11.3	200 (char. E, H) or 225 (char. K, M)	E, H, K, M	B, C, W	D	S	P, R	DAL,MSI,SOA
M55342^05@11#5&	11.5	200 (char. E, H) or 225 (char. K, M)	E, H, K, M	B, C, W	D	S	P, R	DAL,MSI,SOA
M55342^05@11#8&	11.8	200 (char. E, H) or 225 (char. K, M)	E, H, K, M	B, C, W	D	S	P, R	DAL,MSI,SOA
M55342^05@12#0&	12.0	200 (char. E, H) or 225 (char. K, M)	E, H, K, M	B, C, W	G, J, M	S	P, R	DAL,MSI,SOA
M55342^05@12#1&	12.1	200 (char. E, H) or 225 (char. K, M)	E, H, K, M	B, C, W	D	S	P, R	DAL,MSI,SOA
M55342^05@12#4&	12.4	200 (char. E, H) or 225 (char. K, M)	E, H, K, M	B, C, W	D	S	P, R	DAL,MSI,SOA
M55342^05@12#7&	12.7	200 (char. E, H) or 225 (char. K, M)	E, H, K, M	B, C, W	D	S	P, R	DAL,MSI,SOA
M55342^05@13#0&	13.0	200 (char. E, H) or 225 (char. K, M)	E, H, K, M	B, C, W	D, G, J	S	P, R	DAL,MSI,SOA
M55342^05@13#3&	13.3	200 (char. E, H) or 225 (char. K, M)	E, H, K, M	B, C, W	D	S	P, R	DAL,MSI,SOA
M55342^05@13#7&	13.7	200 (char. E, H) or 225 (char. K, M)	E, H, K, M	B, C, W	D	S	P, R	DAL,MSI,SOA
M55342^05@14#0&	14.0	200 (char. E, H) or 225 (char. K, M)	E, H, K, M	B, C, W	D	S	P, R	DAL,MSI,SOA
M55342^05@14#3&	14.3	200 (char. E, H) or 225 (char. K, M)	E, H, K, M	B, C, W	D	S	P, R	DAL,MSI,SOA
M55342^05@14#7&	14.7	200 (char. E, H) or 225 (char. K, M)	E, H, K, M	B, C, W	D	S	P, R	DAL,MSI,SOA
M55342^05@15#0&	15.0	200 (char. E, H) or 225 (char. K, M)	E, H, K, M	B, C, W	D, G, J, M	S	P, R	DAL,MSI,SOA
M55342^05@15#4&	15.4	200 (char. E, H) or 225 (char. K, M)	E, H, K, M	B, C, W	D	S	P, R	DAL,MSI,SOA
M55342^05@15#8&	15.8	200 (char. E, H) or 225 (char. K, M)	E, H, K, M	B, C, W	D	S	P, R	DAL,MSI,SOA
M55342^05@16#0&	16.0	200 (char. E, H) or 225 (char. K, M)	E, H, K, M	B, C, W	G, J	S	P, R	DAL,MSI,SOA
M55342^05@16#2&	16.2	200 (char. E, H) or 225 (char. K, M)	E, H, K, M	B, C, W	D	S	P, R	DAL,MSI,SOA
M55342^05@16#5&	16.5	200 (char. E, H) or 225 (char. K, M)	E, H, K, M	B, C, W	D	S	P, R	DAL,MSI,SOA
M55342^05@16#9&	16.9	200 (char. E, H) or 225 (char. K, M)	E, H, K, M	B, C, W	D	S	P, R	DAL,MSI,SOA
M55342^05@17#4&	17.4	200 (char. E, H) or 225 (char. K, M)	E, H, K, M	B, C, W	D	S	P, R	DAL,MSI,SOA
M55342^05@17#8&	17.8	200 (char. E, H) or 225 (char. K, M)	E, H, K, M	B, C, W	D	S	P, R	DAL,MSI,SOA
M55342^05@18#0&	18.0	200 (char. E, H) or 225 (char. K, M)	E, H, K, M	B, C, W	G, J, M	S	P, R	DAL,MSI,SOA
M55342^05@18#2&	18.2	200 (char. E, H) or 225 (char. K, M)	E, H, K, M	B, C, W	D	S	P, R	DAL,MSI,SOA
M55342^05@18#7&	18.7	200 (char. E, H) or 225 (char. K, M)	E, H, K, M	B, C, W	D	S	P, R	DAL,MSI,SOA

M55342^05@19#1&	19.1	200 (char. E, H) or 225 (char. K, M)	E, H, K, M	B, C, W	D	S	P, R	DAL,MSI,SOA
M55342^05@19#6&	19.6	200 (char. E, H) or 225 (char. K, M)	E, H, K, M	B, C, W	D	S	P, R	DAL,MSI,SOA
M55342^05@20#0&	20.0	200 (char. E, H) or 225 (char. K, M)	E, H, K, M	B, C, W	D, G, J, M	S	P, R	DAL,MSI,SOA
M55342^05@20#5&	20.5	200 (char. E, H) or 225 (char. K, M)	E, H, K, M	B, C, W	D	S	P, R	DAL,MSI,SOA
M55342^05@21#0&	21.0	200 (char. E, H) or 225 (char. K, M)	E, H, K, M	B, C, W	D	S	P, R	DAL,MSI,SOA
M55342^05@21#5&	21.5	200 (char. E, H) or 225 (char. K, M)	E, H, K, M	B, C, W	D	S	P, R	DAL,MSI,SOA
M55342^05@22#0&	22.0	200 (char. E, H) or 225 (char. K, M)	E, H, K, M	B, C, W	G, J, M	S	P, R	DAL,MSI,SOA
M55342^05@22#1&	22.1	200 (char. E, H) or 225 (char. K, M)	E, H, K, M	B, C, W	D	S	P, R	DAL,MSI,SOA
M55342^05@22#6&	22.6	200 (char. E, H) or 225 (char. K, M)	E, H, K, M	B, C, W	D	S	P, R	DAL,MSI,SOA
M55342^05@23#2&	23.2	200 (char. E, H) or 225 (char. K, M)	E, H, K, M	B, C, W	D	S	P, R	DAL,MSI,SOA
M55342^05@23#7&	23.7	200 (char. E, H) or 225 (char. K, M)	E, H, K, M	B, C, W	D	S	P, R	DAL,MSI,SOA
M55342^05@24#0&	24.0	200 (char. E, H) or 225 (char. K, M)	E, H, K, M	B, C, W	G, J	S	P, R	DAL,MSI,SOA
M55342^05@24#3&	24.3	200 (char. E, H) or 225 (char. K, M)	E, H, K, M	B, C, W	D	S	P, R	DAL,MSI,SOA
M55342^05@24#9&	24.9	200 (char. E, H) or 225 (char. K, M)	E, H, K, M	B, C, W	D	S	P, R	DAL,MSI,SOA
M55342^05@25#5&	25.5	200 (char. E, H) or 225 (char. K, M)	E, H, K, M	B, C, W	D	S	P, R	DAL,MSI,SOA
M55342^05@26#1&	26.1	200 (char. E, H) or 225 (char. K, M)	E, H, K, M	B, C, W	D	S	P, R	DAL,MSI,SOA
M55342^05@26#7&	26.7	200 (char. E, H) or 225 (char. K, M)	E, H, K, M	B, C, W	D	S	P, R	DAL,MSI,SOA
M55342^05@27#0&	27.0	200 (char. E, H) or 225 (char. K, M)	E, H, K, M	B, C, W	G, J, M	S	P, R	DAL,MSI,SOA
M55342^05@27#4&	27.4	200 (char. E, H) or 225 (char. K, M)	E, H, K, M	B, C, W	D	S	P, R	DAL,MSI,SOA
M55342^05@28#0&	28.0	200 (char. E, H) or 225 (char. K, M)	E, H, K, M	B, C, W	D	S	P, R	DAL,MSI,SOA
M55342^05@28#7&	28.7	200 (char. E, H) or 225 (char. K, M)	E, H, K, M	B, C, W	D	S	P, R	DAL,MSI,SOA
M55342^05@29#4&	29.4	200 (char. E, H) or 225 (char. K, M)	E, H, K, M	B, C, W	D	S	P, R	DAL,MSI,SOA
M55342^05@30#0&	30.0	200 (char. E, H) or 225 (char. K, M)	E, H, K, M	B, C, W	G, J	S	P, R	DAL,MSI,SOA
M55342^05@30#1&	30.1	200 (char. E, H) or 225 (char. K, M)	E, H, K, M	B, C, W	D	S	P, R	DAL,MSI,SOA
M55342^05@30#9&	30.9	200 (char. E, H) or 225 (char. K, M)	E, H, K, M	B, C, W	D	S	P, R	DAL,MSI,SOA
M55342^05@31#6&	31.6	200 (char. E, H) or 225 (char. K, M)	E, H, K, M	B, C, W	D	S	P, R	DAL,MSI,SOA
M55342^05@32#4&	32.4	200 (char. E, H) or 225 (char. K, M)	E, H, K, M	B, C, W	D	S	P, R	DAL,MSI,SOA
M55342^05@33#0&	33.0	200 (char. E, H) or 225 (char. K, M)	E, H, K, M	B, C, W	G, J, M	S	P, R	DAL,MSI,SOA
M55342^05@33#2&	33.2	200 (char. E, H) or 225 (char. K, M)	E, H, K, M	B, C, W	D	S	P, R	DAL,MSI,SOA
M55342^05@34#0&	34.0	200 (char. E, H) or 225 (char. K, M)	E, H, K, M	B, C, W	D	S	P, R	DAL,MSI,SOA
M55342^05@34#8&	34.8	200 (char. E, H) or 225 (char. K, M)	E, H, K, M	B, C, W	D	S	P, R	DAL,MSI,SOA
M55342^05@35#7&	35.7	200 (char. E, H) or 225 (char. K, M)	E, H, K, M	B, C, W	D	S	P, R	DAL,MSI,SOA
M55342^05@36#0&	36.0	200 (char. E, H) or 225 (char. K, M)	E, H, K, M	B, C, W	G, J	S	P, R	DAL,MSI,SOA
M55342^05@36#5&	36.5	200 (char. E, H) or 225 (char. K, M)	E, H, K, M	B, C, W	D	S	P, R	DAL,MSI,SOA
M55342^05@37#4&	37.4	200 (char. E, H) or 225 (char. K, M)	E, H, K, M	B, C, W	D	S	P, R	DAL,MSI,SOA
M55342^05@38#3&	38.3	200 (char. E, H) or 225 (char. K, M)	E, H, K, M	B, C, W	D	S	P, R	DAL,MSI,SOA
M55342^05@39#0&	39.0	200 (char. E, H) or 225 (char. K, M)	E, H, K, M	B, C, W	G, J, M	S	P, R	DAL,MSI,SOA
M55342^05@39#2&	39.2	200 (char. E, H) or 225 (char. K, M)	E, H, K, M	B, C, W	D	S	P, R	DAL,MSI,SOA
M55342^05@40#2&	40.2	200 (char. E, H) or 225 (char. K, M)	E, H, K, M	B, C, W	D	S	P, R	DAL,MSI,SOA
M55342^05@41#2&	41.2	200 (char. E, H) or 225 (char. K, M)	E, H, K, M	B, C, W	D	S	P, R	DAL,MSI,SOA
M55342^05@42#2&	42.2	200 (char. E, H) or 225 (char. K, M)	E, H, K, M	B, C, W	D	S	P, R	DAL,MSI,SOA
M55342^05@43#0&	43.0	200 (char. E, H) or 225 (char. K, M)	E, H, K, M	B, C, W	G, J	S	P, R	DAL,MSI,SOA
M55342^05@43#2&	43.2	200 (char. E, H) or 225 (char. K, M)	E, H, K, M	B, C, W	D	S	P, R	DAL,MSI,SOA
M55342^05@44#2&	44.2	200 (char. E, H) or 225 (char. K, M)	E, H, K, M	B, C, W	D	S	P, R	DAL,MSI,SOA
M55342^05@45#3&	45.3	200 (char. E, H) or 225 (char. K, M)	E, H, K, M	B, C, W	D	S	P, R	DAL,MSI,SOA
M55342^05@46#4&	46.4	200 (char. E, H) or 225 (char. K, M)	E, H, K, M	B, C, W	D	S	P, R	DAL,MSI,SOA
M55342^05@47#0&	47.0	200 (char. E, H) or 225 (char. K, M)	E, H, K, M	B, C, W	G, J, M	S	P, R	DAL,MSI,SOA

M55342^05@47#5&	47.5	200 (char. E, H) or 225 (char. K, M)	E, H, K, M	B, C, W	D	S	P, R	DAL,MSI,SOA
M55342^05@48#7&	48.7	200 (char. E, H) or 225 (char. K, M)	E, H, K, M	B, C, W	D	S	P, R	DAL,MSI,SOA
M55342^05@49#9&	49.9	200 (char. E, H) or 225 (char. K, M)	E, H, K, M	B, C, W	D	S	P, R	DAL,MSI,SOA
M55342^05@51#0&	51.0	200 (char. E, H) or 225 (char. K, M)	E, H, K, M	B, C, W	G, J	S	P, R	DAL,MSI,SOA
M55342^05@51#1&	51.1	200 (char. E, H) or 225 (char. K, M)	E, H, K, M	B, C, W	D	S	P, R	DAL,MSI,SOA
M55342^05@52#3&	52.3	200 (char. E, H) or 225 (char. K, M)	E, H, K, M	B, C, W	D	S	P, R	DAL,MSI,SOA
M55342^05@53#6&	53.6	200 (char. E, H) or 225 (char. K, M)	E, H, K, M	B, C, W	D	S	P, R	DAL,MSI,SOA
M55342^05@54#9&	54.9	200 (char. E, H) or 225 (char. K, M)	E, H, K, M	B, C, W	D	S	P, R	DAL,MSI,SOA
M55342^05@56#0&	56.0	200 (char. E, H) or 225 (char. K, M)	E, H, K, M	B, C, W	G, J, M	S	P, R	DAL,MSI,SOA
M55342^05@56#2&	56.2	200 (char. E, H) or 225 (char. K, M)	E, H, K, M	B, C, W	D	S	P, R	DAL,MSI,SOA
M55342^05@57#6&	57.6	200 (char. E, H) or 225 (char. K, M)	E, H, K, M	B, C, W	D	S	P, R	DAL,MSI,SOA
M55342^05@59#0&	59.0	200 (char. E, H) or 225 (char. K, M)	E, H, K, M	B, C, W	D	S	P, R	DAL,MSI,SOA
M55342^05@60#4&	60.4	200 (char. E, H) or 225 (char. K, M)	E, H, K, M	B, C, W	D	S	P, R	DAL,MSI,SOA
M55342^05@61#9&	61.9	200 (char. E, H) or 225 (char. K, M)	E, H, K, M	B, C, W	D	S	P, R	DAL,MSI,SOA
M55342^05@62#0&	62.0	200 (char. E, H) or 225 (char. K, M)	E, H, K, M	B, C, W	G, J	S	P, R	DAL,MSI,SOA
M55342^05@63#4&	63.4	200 (char. E, H) or 225 (char. K, M)	E, H, K, M	B, C, W	D	S	P, R	DAL,MSI,SOA
M55342^05@64#9&	64.9	200 (char. E, H) or 225 (char. K, M)	E, H, K, M	B, C, W	D	S	P, R	DAL,MSI,SOA
M55342^05@66#5&	66.5	200 (char. E, H) or 225 (char. K, M)	E, H, K, M	B, C, W	D	S	P, R	DAL,MSI,SOA
M55342^05@68#0&	68.0	200 (char. E, H) or 225 (char. K, M)	E, H, K, M	B, C, W	G, J, M	S	P, R	DAL,MSI,SOA
M55342^05@68#1&	68.1	200 (char. E, H) or 225 (char. K, M)	E, H, K, M	B, C, W	D	S	P, R	DAL,MSI,SOA
M55342^05@69#8&	69.8	200 (char. E, H) or 225 (char. K, M)	E, H, K, M	B, C, W	D	S	P, R	DAL,MSI,SOA
M55342^05@71#5&	71.5	200 (char. E, H) or 225 (char. K, M)	E, H, K, M	B, C, W	D	S	P, R	DAL,MSI,SOA
M55342^05@73#2&	73.2	200 (char. E, H) or 225 (char. K, M)	E, H, K, M	B, C, W	D	S	P, R	DAL,MSI,SOA
M55342^05@75#0&	75.0	200 (char. E, H) or 225 (char. K, M)	E, H, K, M	B, C, W	D, G, J	S	P, R	DAL,MSI,SOA
M55342^05@76#8&	76.8	200 (char. E, H) or 225 (char. K, M)	E, H, K, M	B, C, W	D	S	P, R	DAL,MSI,SOA
M55342^05@78#7&	78.7	200 (char. E, H) or 225 (char. K, M)	E, H, K, M	B, C, W	D	S	P, R	DAL,MSI,SOA
M55342^05@80#6&	80.6	200 (char. E, H) or 225 (char. K, M)	E, H, K, M	B, C, W	D	S	P, R	DAL,MSI,SOA
M55342^05@82#0&	82.0	200 (char. E, H) or 225 (char. K, M)	E, H, K, M	B, C, W	G, J, M	S	P, R	DAL,MSI,SOA
M55342^05@82#5&	82.5	200 (char. E, H) or 225 (char. K, M)	E, H, K, M	B, C, W	D	S	P, R	DAL,MSI,SOA
M55342^05@84#5&	84.5	200 (char. E, H) or 225 (char. K, M)	E, H, K, M	B, C, W	D	S	P, R	DAL,MSI,SOA
M55342^05@86#6&	86.6	200 (char. E, H) or 225 (char. K, M)	E, H, K, M	B, C, W	D	S	P, R	DAL,MSI,SOA
M55342^05@88#7&	88.7	200 (char. E, H) or 225 (char. K, M)	E, H, K, M	B, C, W	D	S	P, R	DAL,MSI,SOA
M55342^05@90#9&	90.9	200 (char. E, H) or 225 (char. K, M)	E, H, K, M	B, C, W	D	S	P, R	DAL,MSI,SOA
M55342^05@91#0&	91.0	200 (char. E, H) or 225 (char. K, M)	E, H, K, M	B, C, W	G, J	S	P, R	DAL,MSI,SOA
M55342^05@93#1&	93.1	200 (char. E, H) or 225 (char. K, M)	E, H, K, M	B, C, W	D	S	P, R	DAL,MSI,SOA
M55342^05@95#3&	95.3	200 (char. E, H) or 225 (char. K, M)	E, H, K, M	B, C, W	D	S	P, R	DAL,MSI,SOA
M55342^05@97#6&	97.6	200 (char. E, H) or 225 (char. K, M)	E, H, K, M	B, C, W	D	S	P, R	DAL,MSI,SOA
M55342^05@100#&	100	200 (char. E, H) or 225 (char. K, M)	E, H, K, M	B, C, W	D, G, J, M	S	P, R	DAL,MSI,SOA
M55342^05@102#&	102	200 (char. E, H) or 225 (char. K, M)	E, H, K, M	B, C, W	D	S	P, R	DAL,MSI,SOA
M55342^05@105#&	105	200 (char. E, H) or 225 (char. K, M)	E, H, K, M	B, C, W	D	S	P, R	DAL,MSI,SOA
M55342^05@107#&	107	200 (char. E, H) or 225 (char. K, M)	E, H, K, M	B, C, W	D	S	P, R	DAL,MSI,SOA
M55342^05@110#&	110	200 (char. E, H) or 225 (char. K, M)	E, H, K, M	B, C, W	D, G, J	S	P, R	DAL,MSI,SOA
M55342^05@113#&	113	200 (char. E, H) or 225 (char. K, M)	E, H, K, M	B, C, W	D	S	P, R	DAL,MSI,SOA
M55342^05@115#&	115	200 (char. E, H) or 225 (char. K, M)	E, H, K, M	B, C, W	D	S	P, R	DAL,MSI,SOA
M55342^05@118#&	118	200 (char. E, H) or 225 (char. K, M)	E, H, K, M	B, C, W	D	S	P, R	DAL,MSI,SOA
M55342^05@120#&	120	200 (char. E, H) or 225 (char. K, M)	E, H, K, M	B, C, W	G, J, M	S	P, R	DAL,MSI,SOA
M55342^05@121#&	121	200 (char. E, H) or 225 (char. K, M)	E, H, K, M	B, C, W	D	S	P, R	DAL,MSI,SOA

M55342^05@124#&	124	200 (char. E, H) or 225 (char. K, M)	E, H, K, M	B, C, W	D	S	P, R	DAL,MSI,SOA
M55342^05@127#&	127	200 (char. E, H) or 225 (char. K, M)	E, H, K, M	B, C, W	D	S	P, R	DAL,MSI,SOA
M55342^05@130#&	130	200 (char. E, H) or 225 (char. K, M)	E, H, K, M	B, C, W	D, G, J	S	P, R	DAL,MSI,SOA
M55342^05@133#&	133	200 (char. E, H) or 225 (char. K, M)	E, H, K, M	B, C, W	D	S	P, R	DAL,MSI,SOA
M55342^05@137#&	137	200 (char. E, H) or 225 (char. K, M)	E, H, K, M	B, C, W	D	S	P, R	DAL,MSI,SOA
M55342^05@140#&	140	200 (char. E, H) or 225 (char. K, M)	E, H, K, M	B, C, W	D	S	P, R	DAL,MSI,SOA
M55342^05@143#&	143	200 (char. E, H) or 225 (char. K, M)	E, H, K, M	B, C, W	D	S	P, R	DAL,MSI,SOA
M55342^05@147#&	147	200 (char. E, H) or 225 (char. K, M)	E, H, K, M	B, C, W	D	S	P, R	DAL,MSI,SOA
M55342^05@150#&	150	200 (char. E, H) or 225 (char. K, M)	E, H, K, M	B, C, W	D, G, J, M	S	P, R	DAL,MSI,SOA
M55342^05@154#&	154	200 (char. E, H) or 225 (char. K, M)	E, H, K, M	B, C, W	D	S	P, R	DAL,MSI,SOA
M55342^05@158#&	158	200 (char. E, H) or 225 (char. K, M)	E, H, K, M	B, C, W	D	S	P, R	DAL,MSI,SOA
M55342^05@160#&	160	200 (char. E, H) or 225 (char. K, M)	E, H, K, M	B, C, W	G, J	S	P, R	DAL,MSI,SOA
M55342^05@162#&	162	200 (char. E, H) or 225 (char. K, M)	E, H, K, M	B, C, W	D	S	P, R	DAL,MSI,SOA
M55342^05@165#&	165	200 (char. E, H) or 225 (char. K, M)	E, H, K, M	B, C, W	D	S	P, R	DAL,MSI,SOA
M55342^05@169#&	169	200 (char. E, H) or 225 (char. K, M)	E, H, K, M	B, C, W	D	S	P, R	DAL,MSI,SOA
M55342^05@174#&	174	200 (char. E, H) or 225 (char. K, M)	E, H, K, M	B, C, W	D	S	P, R	DAL,MSI,SOA
M55342^05@178#&	178	200 (char. E, H) or 225 (char. K, M)	E, H, K, M	B, C, W	D	S	P, R	DAL,MSI,SOA
M55342^05@180#&	180	200 (char. E, H) or 225 (char. K, M)	E, H, K, M	B, C, W	G, J, M	S	P, R	DAL,MSI,SOA
M55342^05@182#&	182	200 (char. E, H) or 225 (char. K, M)	E, H, K, M	B, C, W	D	S	P, R	DAL,MSI,SOA
M55342^05@187#&	187	200 (char. E, H) or 225 (char. K, M)	E, H, K, M	B, C, W	D	S	P, R	DAL,MSI,SOA
M55342^05@191#&	191	200 (char. E, H) or 225 (char. K, M)	E, H, K, M	B, C, W	D	S	P, R	DAL,MSI,SOA
M55342^05@196#&	196	200 (char. E, H) or 225 (char. K, M)	E, H, K, M	B, C, W	D	S	P, R	DAL,MSI,SOA
M55342^05@200#&	200	200 (char. E, H) or 225 (char. K, M)	E, H, K, M	B, C, W	D, G, J, M	S	P, R	DAL,MSI,SOA
M55342^05@205#&	205	200 (char. E, H) or 225 (char. K, M)	E, H, K, M	B, C, W	D	S	P, R	DAL,MSI,SOA
M55342^05@210#&	210	200 (char. E, H) or 225 (char. K, M)	E, H, K, M	B, C, W	D	S	P, R	DAL,MSI,SOA
M55342^05@215#&	215	200 (char. E, H) or 225 (char. K, M)	E, H, K, M	B, C, W	D	S	P, R	DAL,MSI,SOA
M55342^05@220#&	220	200 (char. E, H) or 225 (char. K, M)	E, H, K, M	B, C, W	G, J, M	S	P, R	DAL,MSI,SOA
M55342^05@221#&	221	200 (char. E, H) or 225 (char. K, M)	E, H, K, M	B, C, W	D	S	P, R	DAL,MSI,SOA
M55342^05@226#&	226	200 (char. E, H) or 225 (char. K, M)	E, H, K, M	B, C, W	D	S	P, R	DAL,MSI,SOA
M55342^05@232#&	232	200 (char. E, H) or 225 (char. K, M)	E, H, K, M	B, C, W	D	S	P, R	DAL,MSI,SOA
M55342^05@237#&	237	200 (char. E, H) or 225 (char. K, M)	E, H, K, M	B, C, W	D	S	P, R	DAL,MSI,SOA
M55342^05@240#&	240	200 (char. E, H) or 225 (char. K, M)	E, H, K, M	B, C, W	G, J	S	P, R	DAL,MSI,SOA
M55342^05@243#&	243	200 (char. E, H) or 225 (char. K, M)	E, H, K, M	B, C, W	D	S	P, R	DAL,MSI,SOA
M55342^05@249#&	249	200 (char. E, H) or 225 (char. K, M)	E, H, K, M	B, C, W	D	S	P, R	DAL,MSI,SOA
M55342^05@255#&	255	200 (char. E, H) or 225 (char. K, M)	E, H, K, M	B, C, W	D	S	P, R	DAL,MSI,SOA
M55342^05@261#&	261	200 (char. E, H) or 225 (char. K, M)	E, H, K, M	B, C, W	D	S	P, R	DAL,MSI,SOA
M55342^05@267#&	267	200 (char. E, H) or 225 (char. K, M)	E, H, K, M	B, C, W	D	S	P, R	DAL,MSI,SOA
M55342^05@270#&	270	200 (char. E, H) or 225 (char. K, M)	E, H, K, M	B, C, W	G, J, M	S	P, R	DAL,MSI,SOA
M55342^05@274#&	274	200 (char. E, H) or 225 (char. K, M)	E, H, K, M	B, C, W	D	S	P, R	DAL,MSI,SOA
M55342^05@280#&	280	200 (char. E, H) or 225 (char. K, M)	E, H, K, M	B, C, W	D	S	P, R	DAL,MSI,SOA
M55342^05@287#&	287	200 (char. E, H) or 225 (char. K, M)	E, H, K, M	B, C, W	D	S	P, R	DAL,MSI,SOA
M55342^05@294#&	294	200 (char. E, H) or 225 (char. K, M)	E, H, K, M	B, C, W	D	S	P, R	DAL,MSI,SOA
M55342^05@300#&	300	200 (char. E, H) or 225 (char. K, M)	E, H, K, M	B, C, W	G, J	S	P, R	DAL,MSI,SOA
M55342^05@301#&	301	200 (char. E, H) or 225 (char. K, M)	E, H, K, M	B, C, W	D	S	P, R	DAL,MSI,SOA
M55342^05@309#&	309	200 (char. E, H) or 225 (char. K, M)	E, H, K, M	B, C, W	D	S	P, R	DAL,MSI,SOA
M55342^05@316#&	316	200 (char. E, H) or 225 (char. K, M)	E, H, K, M	B, C, W	D	S	P, R	DAL,MSI,SOA
M55342^05@324#&	324	200 (char. E, H) or 225 (char. K, M)	E, H, K, M	B, C, W	D	S	P, R	DAL,MSI,SOA

M55342^05@330#&	330	200 (char. E, H) or 225 (char. K, M)	E, H, K, M	B, C, W	G, J, M	S	P, R	DAL,MSI,SOA
M55342^05@332#&	332	200 (char. E, H) or 225 (char. K, M)	E, H, K, M	B, C, W	D	S	P, R	DAL,MSI,SOA
M55342^05@340#&	340	200 (char. E, H) or 225 (char. K, M)	E, H, K, M	B, C, W	D	S	P, R	DAL,MSI,SOA
M55342^05@348#&	348	200 (char. E, H) or 225 (char. K, M)	E, H, K, M	B, C, W	D	S	P, R	DAL,MSI,SOA
M55342^05@357#&	357	200 (char. E, H) or 225 (char. K, M)	E, H, K, M	B, C, W	D	S	P, R	DAL,MSI,SOA
M55342^05@360#&	360	200 (char. E, H) or 225 (char. K, M)	E, H, K, M	B, C, W	G, J	S	P, R	DAL,MSI,SOA
M55342^05@365#&	365	200 (char. E, H) or 225 (char. K, M)	E, H, K, M	B, C, W	D	S	P, R	DAL,MSI,SOA
M55342^05@374#&	374	200 (char. E, H) or 225 (char. K, M)	E, H, K, M	B, C, W	D	S	P, R	DAL,MSI,SOA
M55342^05@383#&	383	200 (char. E, H) or 225 (char. K, M)	E, H, K, M	B, C, W	D	S	P, R	DAL,MSI,SOA
M55342^05@390#&	390	200 (char. E, H) or 225 (char. K, M)	E, H, K, M	B, C, W	G, J, M	S	P, R	DAL,MSI,SOA
M55342^05@392#&	392	200 (char. E, H) or 225 (char. K, M)	E, H, K, M	B, C, W	D	S	P, R	DAL,MSI,SOA
M55342^05@402#&	402	200 (char. E, H) or 225 (char. K, M)	E, H, K, M	B, C, W	D	S	P, R	DAL,MSI,SOA
M55342^05@412#&	412	200 (char. E, H) or 225 (char. K, M)	E, H, K, M	B, C, W	D	S	P, R	DAL,MSI,SOA
M55342^05@422#&	422	200 (char. E, H) or 225 (char. K, M)	E, H, K, M	B, C, W	D	S	P, R	DAL,MSI,SOA
M55342^05@430#&	430	200 (char. E, H) or 225 (char. K, M)	E, H, K, M	B, C, W	G, J	S	P, R	DAL,MSI,SOA
M55342^05@432#&	432	200 (char. E, H) or 225 (char. K, M)	E, H, K, M	B, C, W	D	S	P, R	DAL,MSI,SOA
M55342^05@442#&	442	200 (char. E, H) or 225 (char. K, M)	E, H, K, M	B, C, W	D	S	P, R	DAL,MSI,SOA
M55342^05@453#&	453	200 (char. E, H) or 225 (char. K, M)	E, H, K, M	B, C, W	D	S	P, R	DAL,MSI,SOA
M55342^05@464#&	464	200 (char. E, H) or 225 (char. K, M)	E, H, K, M	B, C, W	D	S	P, R	DAL,MSI,SOA
M55342^05@470#&	470	200 (char. E, H) or 225 (char. K, M)	E, H, K, M	B, C, W	G, J, M	S	P, R	DAL,MSI,SOA
M55342^05@475#&	475	200 (char. E, H) or 225 (char. K, M)	E, H, K, M	B, C, W	D	S	P, R	DAL,MSI,SOA
M55342^05@487#&	487	200 (char. E, H) or 225 (char. K, M)	E, H, K, M	B, C, W	D	S	P, R	DAL,MSI,SOA
M55342^05@499#&	499	200 (char. E, H) or 225 (char. K, M)	E, H, K, M	B, C, W	D	S	P, R	DAL,MSI,SOA
M55342^05@510#&	510	200 (char. E, H) or 225 (char. K, M)	E, H, K, M	B, C, W	G, J	S	P, R	DAL,MSI,SOA
M55342^05@511#&	511	200 (char. E, H) or 225 (char. K, M)	E, H, K, M	B, C, W	D	S	P, R	DAL,MSI,SOA
M55342^05@523#&	523	200 (char. E, H) or 225 (char. K, M)	E, H, K, M	B, C, W	D	S	P, R	DAL,MSI,SOA
M55342^05@536#&	536	200 (char. E, H) or 225 (char. K, M)	E, H, K, M	B, C, W	D	S	P, R	DAL,MSI,SOA
M55342^05@549#&	549	200 (char. E, H) or 225 (char. K, M)	E, H, K, M	B, C, W	D	S	P, R	DAL,MSI,SOA
M55342^05@560#&	560	200 (char. E, H) or 225 (char. K, M)	E, H, K, M	B, C, W	G, J, M	S	P, R	DAL,MSI,SOA
M55342^05@562#&	562	200 (char. E, H) or 225 (char. K, M)	E, H, K, M	B, C, W	D	S	P, R	DAL,MSI,SOA
M55342^05@576#&	576	200 (char. E, H) or 225 (char. K, M)	E, H, K, M	B, C, W	D	S	P, R	DAL,MSI,SOA
M55342^05@590#&	590	200 (char. E, H) or 225 (char. K, M)	E, H, K, M	B, C, W	D	S	P, R	DAL,MSI,SOA
M55342^05@604#&	604	200 (char. E, H) or 225 (char. K, M)	E, H, K, M	B, C, W	D	S	P, R	DAL,MSI,SOA
M55342^05@619#&	619	200 (char. E, H) or 225 (char. K, M)	E, H, K, M	B, C, W	D	S	P, R	DAL,MSI,SOA
M55342^05@620#&	620	200 (char. E, H) or 225 (char. K, M)	E, H, K, M	B, C, W	G, J	S	P, R	DAL,MSI,SOA
M55342^05@634#&	634	200 (char. E, H) or 225 (char. K, M)	E, H, K, M	B, C, W	D	S	P, R	DAL,MSI,SOA
M55342^05@649#&	649	200 (char. E, H) or 225 (char. K, M)	E, H, K, M	B, C, W	D	S	P, R	DAL,MSI,SOA
M55342^05@665#&	665	200 (char. E, H) or 225 (char. K, M)	E, H, K, M	B, C, W	D	S	P, R	DAL,MSI,SOA
M55342^05@680#&	680	200 (char. E, H) or 225 (char. K, M)	E, H, K, M	B, C, W	G, J, M	S	P, R	DAL,MSI,SOA
M55342^05@681#&	681	200 (char. E, H) or 225 (char. K, M)	E, H, K, M	B, C, W	D	S	P, R	DAL,MSI,SOA
M55342^05@698#&	698	200 (char. E, H) or 225 (char. K, M)	E, H, K, M	B, C, W	D	S	P, R	DAL,MSI,SOA
M55342^05@715#&	715	200 (char. E, H) or 225 (char. K, M)	E, H, K, M	B, C, W	D	S	P, R	DAL,MSI,SOA
M55342^05@732#&	732	200 (char. E, H) or 225 (char. K, M)	E, H, K, M	B, C, W	D	S	P, R	DAL,MSI,SOA
M55342^05@750#&	750	200 (char. E, H) or 225 (char. K, M)	E, H, K, M	B, C, W	D, G, J	S	P, R	DAL,MSI,SOA
M55342^05@768#&	768	200 (char. E, H) or 225 (char. K, M)	E, H, K, M	B, C, W	D	S	P, R	DAL,MSI,SOA
M55342^05@787#&	787	200 (char. E, H) or 225 (char. K, M)	E, H, K, M	B, C, W	D	S	P, R	DAL,MSI,SOA
M55342^05@806#&	806	200 (char. E, H) or 225 (char. K, M)	E, H, K, M	B, C, W	D	S	P, R	DAL,MSI,SOA

M55342^05@820#&	820	200 (char. E, H) or 225 (char. K, M)	E, H, K, M	B, C, W	G, J, M	S	P, R	DAL,MSI,SOA
M55342^05@825#&	825	200 (char. E, H) or 225 (char. K, M)	E, H, K, M	B, C, W	D	S	P, R	DAL,MSI,SOA
M55342^05@845#&	845	200 (char. E, H) or 225 (char. K, M)	E, H, K, M	B, C, W	D	S	P, R	DAL,MSI,SOA
M55342^05@866#&	866	200 (char. E, H) or 225 (char. K, M)	E, H, K, M	B, C, W	D	S	P, R	DAL,MSI,SOA
M55342^05@887#&	887	200 (char. E, H) or 225 (char. K, M)	E, H, K, M	B, C, W	D	S	P, R	DAL,MSI,SOA
M55342^05@909#&	909	200 (char. E, H) or 225 (char. K, M)	E, H, K, M	B, C, W	D	S	P, R	DAL,MSI,SOA
M55342^05@910#&	910	200 (char. E, H) or 225 (char. K, M)	E, H, K, M	B, C, W	G, J	S	P, R	DAL,MSI,SOA
M55342^05@931#&	931	200 (char. E, H) or 225 (char. K, M)	E, H, K, M	B, C, W	D	S	P, R	DAL,MSI,SOA
M55342^05@953#&	953	200 (char. E, H) or 225 (char. K, M)	E, H, K, M	B, C, W	D	S	P, R	DAL,MSI,SOA
M55342^05@976#&	976	200 (char. E, H) or 225 (char. K, M)	E, H, K, M	B, C, W	D	S	P, R	DAL,MSI,SOA
M55342^05@1#00&	1,000	200 (char. E, H) or 225 (char. K, M)	E, H, K, M	B, C, W	E, H, K, N	S	P, R	DAL,MSI,SOA
M55342^05@1#02&	1,020	200 (char. E, H) or 225 (char. K, M)	E, H, K, M	B, C, W	E	S	P, R	DAL,MSI,SOA
M55342^05@1#05&	1,050	200 (char. E, H) or 225 (char. K, M)	E, H, K, M	B, C, W	E	S	P, R	DAL,MSI,SOA
M55342^05@1#07&	1,070	200 (char. E, H) or 225 (char. K, M)	E, H, K, M	B, C, W	E	S	P, R	DAL,MSI,SOA
M55342^05@1#10&	1,100	200 (char. E, H) or 225 (char. K, M)	E, H, K, M	B, C, W	E, H, K	S	P, R	DAL,MSI,SOA
M55342^05@1#13&	1,130	200 (char. E, H) or 225 (char. K, M)	E, H, K, M	B, C, W	E	S	P, R	DAL,MSI,SOA
M55342^05@1#15&	1,150	200 (char. E, H) or 225 (char. K, M)	E, H, K, M	B, C, W	E	S	P, R	DAL,MSI,SOA
M55342^05@1#18&	1,180	200 (char. E, H) or 225 (char. K, M)	E, H, K, M	B, C, W	E	S	P, R	DAL,MSI,SOA
M55342^05@1#20&	1,200	200 (char. E, H) or 225 (char. K, M)	E, H, K, M	B, C, W	H, K, N	S	P, R	DAL,MSI,SOA
M55342^05@1#21&	1,210	200 (char. E, H) or 225 (char. K, M)	E, H, K, M	B, C, W	E	S	P, R	DAL,MSI,SOA
M55342^05@1#24&	1,240	200 (char. E, H) or 225 (char. K, M)	E, H, K, M	B, C, W	E	S	P, R	DAL,MSI,SOA
M55342^05@1#27&	1,270	200 (char. E, H) or 225 (char. K, M)	E, H, K, M	B, C, W	E	S	P, R	DAL,MSI,SOA
M55342^05@1#30&	1,300	200 (char. E, H) or 225 (char. K, M)	E, H, K, M	B, C, W	E, H, K	S	P, R	DAL,MSI,SOA
M55342^05@1#33&	1,330	200 (char. E, H) or 225 (char. K, M)	E, H, K, M	B, C, W	E	S	P, R	DAL,MSI,SOA
M55342^05@1#37&	1,370	200 (char. E, H) or 225 (char. K, M)	E, H, K, M	B, C, W	E	S	P, R	DAL,MSI,SOA
M55342^05@1#40&	1,400	200 (char. E, H) or 225 (char. K, M)	E, H, K, M	B, C, W	E	S	P, R	DAL,MSI,SOA
M55342^05@1#43&	1,430	200 (char. E, H) or 225 (char. K, M)	E, H, K, M	B, C, W	E	S	P, R	DAL,MSI,SOA
M55342^05@1#47&	1,470	200 (char. E, H) or 225 (char. K, M)	E, H, K, M	B, C, W	E	S	P, R	DAL,MSI,SOA
M55342^05@1#50&	1,500	200 (char. E, H) or 225 (char. K, M)	E, H, K, M	B, C, W	E, H, K, N	S	P, R	DAL,MSI,SOA
M55342^05@1#54&	1,540	200 (char. E, H) or 225 (char. K, M)	E, H, K, M	B, C, W	E	S	P, R	DAL,MSI,SOA
M55342^05@1#58&	1,580	200 (char. E, H) or 225 (char. K, M)	E, H, K, M	B, C, W	E	S	P, R	DAL,MSI,SOA
M55342^05@1#60&	1,600	200 (char. E, H) or 225 (char. K, M)	E, H, K, M	B, C, W	H, K	S	P, R	DAL,MSI,SOA
M55342^05@1#62&	1,620	200 (char. E, H) or 225 (char. K, M)	E, H, K, M	B, C, W	E	S	P, R	DAL,MSI,SOA
M55342^05@1#65&	1,650	200 (char. E, H) or 225 (char. K, M)	E, H, K, M	B, C, W	E	S	P, R	DAL,MSI,SOA
M55342^05@1#69&	1,690	200 (char. E, H) or 225 (char. K, M)	E, H, K, M	B, C, W	E	S	P, R	DAL,MSI,SOA
M55342^05@1#74&	1,740	200 (char. E, H) or 225 (char. K, M)	E, H, K, M	B, C, W	E	S	P, R	DAL,MSI,SOA
M55342^05@1#78&	1,780	200 (char. E, H) or 225 (char. K, M)	E, H, K, M	B, C, W	E	S	P, R	DAL,MSI,SOA
M55342^05@1#80&	1,800	200 (char. E, H) or 225 (char. K, M)	E, H, K, M	B, C, W	H, K, N	S	P, R	DAL,MSI,SOA
M55342^05@1#82&	1,820	200 (char. E, H) or 225 (char. K, M)	E, H, K, M	B, C, W	E	S	P, R	DAL,MSI,SOA
M55342^05@1#87&	1,870	200 (char. E, H) or 225 (char. K, M)	E, H, K, M	B, C, W	E	S	P, R	DAL,MSI,SOA
M55342^05@1#91&	1,910	200 (char. E, H) or 225 (char. K, M)	E, H, K, M	B, C, W	E	S	P, R	DAL,MSI,SOA
M55342^05@1#96&	1,960	200 (char. E, H) or 225 (char. K, M)	E, H, K, M	B, C, W	E	S	P, R	DAL,MSI,SOA
M55342^05@2#00&	2,000	200 (char. E, H) or 225 (char. K, M)	E, H, K, M	B, C, W	E, H, K, N	S	P, R	DAL,MSI,SOA
M55342^05@2#05&	2,050	200 (char. E, H) or 225 (char. K, M)	E, H, K, M	B, C, W	E	S	P, R	DAL,MSI,SOA
M55342^05@2#10&	2,100	200 (char. E, H) or 225 (char. K, M)	E, H, K, M	B, C, W	E	S	P, R	DAL,MSI,SOA
M55342^05@2#15&	2,150	200 (char. E, H) or 225 (char. K, M)	E, H, K, M	B, C, W	E	S	P, R	DAL,MSI,SOA
M55342^05@2#20&	2,200	200 (char. E, H) or 225 (char. K, M)	E, H, K, M	B, C, W	H, K, N	S	P, R	DAL,MSI,SOA

M55342^05@2#21&	2,210	200 (char. E, H) or 225 (char. K, M)	E, H, K, M	B, C, W	E	S	P, R	DAL,MSI,SOA
M55342^05@2#26&	2,260	200 (char. E, H) or 225 (char. K, M)	E, H, K, M	B, C, W	E	S	P, R	DAL,MSI,SOA
M55342^05@2#32&	2,320	200 (char. E, H) or 225 (char. K, M)	E, H, K, M	B, C, W	E	S	P, R	DAL,MSI,SOA
M55342^05@2#37&	2,370	200 (char. E, H) or 225 (char. K, M)	E, H, K, M	B, C, W	E	S	P, R	DAL,MSI,SOA
M55342^05@2#40&	2,400	200 (char. E, H) or 225 (char. K, M)	E, H, K, M	B, C, W	H, K	S	P, R	DAL,MSI,SOA
M55342^05@2#43&	2,430	200 (char. E, H) or 225 (char. K, M)	E, H, K, M	B, C, W	E	S	P, R	DAL,MSI,SOA
M55342^05@2#49&	2,490	200 (char. E, H) or 225 (char. K, M)	E, H, K, M	B, C, W	E	S	P, R	DAL,MSI,SOA
M55342^05@2#55&	2,550	200 (char. E, H) or 225 (char. K, M)	E, H, K, M	B, C, W	E	S	P, R	DAL,MSI,SOA
M55342^05@2#61&	2,610	200 (char. E, H) or 225 (char. K, M)	E, H, K, M	B, C, W	E	S	P, R	DAL,MSI,SOA
M55342^05@2#67&	2,670	200 (char. E, H) or 225 (char. K, M)	E, H, K, M	B, C, W	E	S	P, R	DAL,MSI,SOA
M55342^05@2#70&	2,700	200 (char. E, H) or 225 (char. K, M)	E, H, K, M	B, C, W	H, K, N	S	P, R	DAL,MSI,SOA
M55342^05@2#74&	2,740	200 (char. E, H) or 225 (char. K, M)	E, H, K, M	B, C, W	E	S	P, R	DAL,MSI,SOA
M55342^05@2#80&	2,800	200 (char. E, H) or 225 (char. K, M)	E, H, K, M	B, C, W	E	S	P, R	DAL,MSI,SOA
M55342^05@2#87&	2,870	200 (char. E, H) or 225 (char. K, M)	E, H, K, M	B, C, W	E	S	P, R	DAL,MSI,SOA
M55342^05@2#94&	2,940	200 (char. E, H) or 225 (char. K, M)	E, H, K, M	B, C, W	E	S	P, R	DAL,MSI,SOA
M55342^05@3#00&	3,000	200 (char. E, H) or 225 (char. K, M)	E, H, K, M	B, C, W	H, K	S	P, R	DAL,MSI,SOA
M55342^05@3#01&	3,010	200 (char. E, H) or 225 (char. K, M)	E, H, K, M	B, C, W	E	S	P, R	DAL,MSI,SOA
M55342^05@3#09&	3,090	200 (char. E, H) or 225 (char. K, M)	E, H, K, M	B, C, W	E	S	P, R	DAL,MSI,SOA
M55342^05@3#16&	3,160	200 (char. E, H) or 225 (char. K, M)	E, H, K, M	B, C, W	E	S	P, R	DAL,MSI,SOA
M55342^05@3#24&	3,240	200 (char. E, H) or 225 (char. K, M)	E, H, K, M	B, C, W	E	S	P, R	DAL,MSI,SOA
M55342^05@3#30&	3,300	200 (char. E, H) or 225 (char. K, M)	E, H, K, M	B, C, W	H, K, N	S	P, R	DAL,MSI,SOA
M55342^05@3#32&	3,320	200 (char. E, H) or 225 (char. K, M)	E, H, K, M	B, C, W	E	S	P, R	DAL,MSI,SOA
M55342^05@3#40&	3,400	200 (char. E, H) or 225 (char. K, M)	E, H, K, M	B, C, W	E	S	P, R	DAL,MSI,SOA
M55342^05@3#48&	3,480	200 (char. E, H) or 225 (char. K, M)	E, H, K, M	B, C, W	E	S	P, R	DAL,MSI,SOA
M55342^05@3#57&	3,570	200 (char. E, H) or 225 (char. K, M)	E, H, K, M	B, C, W	E	S	P, R	DAL,MSI,SOA
M55342^05@3#60&	3,600	200 (char. E, H) or 225 (char. K, M)	E, H, K, M	B, C, W	H, K	S	P, R	DAL,MSI,SOA
M55342^05@3#65&	3,650	200 (char. E, H) or 225 (char. K, M)	E, H, K, M	B, C, W	E	S	P, R	DAL,MSI,SOA
M55342^05@3#74&	3,740	200 (char. E, H) or 225 (char. K, M)	E, H, K, M	B, C, W	E	S	P, R	DAL,MSI,SOA
M55342^05@3#83&	3,830	200 (char. E, H) or 225 (char. K, M)	E, H, K, M	B, C, W	E	S	P, R	DAL,MSI,SOA
M55342^05@3#90&	3,900	200 (char. E, H) or 225 (char. K, M)	E, H, K, M	B, C, W	H, K, N	S	P, R	DAL,MSI,SOA
M55342^05@3#92&	3,920	200 (char. E, H) or 225 (char. K, M)	E, H, K, M	B, C, W	E	S	P, R	DAL,MSI,SOA
M55342^05@4#02&	4,020	200 (char. E, H) or 225 (char. K, M)	E, H, K, M	B, C, W	E	S	P, R	DAL,MSI,SOA
M55342^05@4#12&	4,120	200 (char. E, H) or 225 (char. K, M)	E, H, K, M	B, C, W	E	S	P, R	DAL,MSI,SOA
M55342^05@4#22&	4,220	200 (char. E, H) or 225 (char. K, M)	E, H, K, M	B, C, W	E	S	P, R	DAL,MSI,SOA
M55342^05@4#30&	4,300	200 (char. E, H) or 225 (char. K, M)	E, H, K, M	B, C, W	H, K	S	P, R	DAL,MSI,SOA
M55342^05@4#32&	4,320	200 (char. E, H) or 225 (char. K, M)	E, H, K, M	B, C, W	E	S	P, R	DAL,MSI,SOA
M55342^05@4#42&	4,420	200 (char. E, H) or 225 (char. K, M)	E, H, K, M	B, C, W	E	S	P, R	DAL,MSI,SOA
M55342^05@4#53&	4,530	200 (char. E, H) or 225 (char. K, M)	E, H, K, M	B, C, W	E	S	P, R	DAL,MSI,SOA
M55342^05@4#64&	4,640	200 (char. E, H) or 225 (char. K, M)	E, H, K, M	B, C, W	E	S	P, R	DAL,MSI,SOA
M55342^05@4#70&	4,700	200 (char. E, H) or 225 (char. K, M)	E, H, K, M	B, C, W	H, K, N	S	P, R	DAL,MSI,SOA
M55342^05@4#75&	4,750	200 (char. E, H) or 225 (char. K, M)	E, H, K, M	B, C, W	E	S	P, R	DAL,MSI,SOA
M55342^05@4#87&	4,870	200 (char. E, H) or 225 (char. K, M)	E, H, K, M	B, C, W	E	S	P, R	DAL,MSI,SOA
M55342^05@4#99&	4,990	200 (char. E, H) or 225 (char. K, M)	E, H, K, M	B, C, W	E	S	P, R	DAL,MSI,SOA
M55342^05@5#10&	5,100	200 (char. E, H) or 225 (char. K, M)	E, H, K, M	B, C, W	H, K	S	P, R	DAL,MSI,SOA
M55342^05@5#11&	5,110	200 (char. E, H) or 225 (char. K, M)	E, H, K, M	B, C, W	E	S	P, R	DAL,MSI,SOA
M55342^05@5#23&	5,230	200 (char. E, H) or 225 (char. K, M)	E, H, K, M	B, C, W	E	S	P, R	DAL,MSI,SOA
M55342^05@5#36&	5,360	200 (char. E, H) or 225 (char. K, M)	E, H, K, M	B, C, W	E	S	P, R	DAL,MSI,SOA

M55342^05@5#49&	5,490	200 (char. E, H) or 225 (char. K, M)	E, H, K, M	B, C, W	E	S	P, R	DAL,MSI,SOA
M55342^05@5#60&	5,600	200 (char. E, H) or 225 (char. K, M)	E, H, K, M	B, C, W	H, K, N	S	P, R	DAL,MSI,SOA
M55342^05@5#62&	5,620	200 (char. E, H) or 225 (char. K, M)	E, H, K, M	B, C, W	E	S	P, R	DAL,MSI,SOA
M55342^05@5#76&	5,760	200 (char. E, H) or 225 (char. K, M)	E, H, K, M	B, C, W	E	S	P, R	DAL,MSI,SOA
M55342^05@5#90&	5,900	200 (char. E, H) or 225 (char. K, M)	E, H, K, M	B, C, W	E	S	P, R	DAL,MSI,SOA
M55342^05@6#04&	6,040	200 (char. E, H) or 225 (char. K, M)	E, H, K, M	B, C, W	E	S	P, R	DAL,MSI,SOA
M55342^05@6#19&	6,190	200 (char. E, H) or 225 (char. K, M)	E, H, K, M	B, C, W	E	S	P, R	DAL,MSI,SOA
M55342^05@6#20&	6,200	200 (char. E, H) or 225 (char. K, M)	E, H, K, M	B, C, W	H, K	S	P, R	DAL,MSI,SOA
M55342^05@6#34&	6,340	200 (char. E, H) or 225 (char. K, M)	E, H, K, M	B, C, W	E	S	P, R	DAL,MSI,SOA
M55342^05@6#49&	6,490	200 (char. E, H) or 225 (char. K, M)	E, H, K, M	B, C, W	E	S	P, R	DAL,MSI,SOA
M55342^05@6#65&	6,650	200 (char. E, H) or 225 (char. K, M)	E, H, K, M	B, C, W	E	S	P, R	DAL,MSI,SOA
M55342^05@6#80&	6,800	200 (char. E, H) or 225 (char. K, M)	E, H, K, M	B, C, W	H, K, N	S	P, R	DAL,MSI,SOA
M55342^05@6#81&	6,810	200 (char. E, H) or 225 (char. K, M)	E, H, K, M	B, C, W	E	S	P, R	DAL,MSI,SOA
M55342^05@6#98&	6,980	200 (char. E, H) or 225 (char. K, M)	E, H, K, M	B, C, W	E	S	P, R	DAL,MSI,SOA
M55342^05@7#15&	7,150	200 (char. E, H) or 225 (char. K, M)	E, H, K, M	B, C, W	E	S	P, R	DAL,MSI,SOA
M55342^05@7#32&	7,320	200 (char. E, H) or 225 (char. K, M)	E, H, K, M	B, C, W	E	S	P, R	DAL,MSI,SOA
M55342^05@7#50&	7,500	200 (char. E, H) or 225 (char. K, M)	E, H, K, M	B, C, W	E, H, K	S	P, R	DAL,MSI,SOA
M55342^05@7#68&	7,680	200 (char. E, H) or 225 (char. K, M)	E, H, K, M	B, C, W	E	S	P, R	DAL,MSI,SOA
M55342^05@7#87&	7,870	200 (char. E, H) or 225 (char. K, M)	E, H, K, M	B, C, W	E	S	P, R	DAL,MSI,SOA
M55342^05@8#06&	8,060	200 (char. E, H) or 225 (char. K, M)	E, H, K, M	B, C, W	E	S	P, R	DAL,MSI,SOA
M55342^05@8#20&	8,200	200 (char. E, H) or 225 (char. K, M)	E, H, K, M	B, C, W	H, K, N	S	P, R	DAL,MSI,SOA
M55342^05@8#25&	8,250	200 (char. E, H) or 225 (char. K, M)	E, H, K, M	B, C, W	E	S	P, R	DAL,MSI,SOA
M55342^05@8#45&	8,450	200 (char. E, H) or 225 (char. K, M)	E, H, K, M	B, C, W	E	S	P, R	DAL,MSI,SOA
M55342^05@8#66&	8,660	200 (char. E, H) or 225 (char. K, M)	E, H, K, M	B, C, W	E	S	P, R	DAL,MSI,SOA
M55342^05@8#87&	8,870	200 (char. E, H) or 225 (char. K, M)	E, H, K, M	B, C, W	E	S	P, R	DAL,MSI,SOA
M55342^05@9#09&	9,090	200 (char. E, H) or 225 (char. K, M)	E, H, K, M	B, C, W	E	S	P, R	DAL,MSI,SOA
M55342^05@9#10&	9,100	200 (char. E, H) or 225 (char. K, M)	E, H, K, M	B, C, W	H, K	S	P, R	DAL,MSI,SOA
M55342^05@9#31&	9,310	200 (char. E, H) or 225 (char. K, M)	E, H, K, M	B, C, W	E	S	P, R	DAL,MSI,SOA
M55342^05@9#53&	9,530	200 (char. E, H) or 225 (char. K, M)	E, H, K, M	B, C, W	E	S	P, R	DAL,MSI,SOA
M55342^05@9#76&	9,760	200 (char. E, H) or 225 (char. K, M)	E, H, K, M	B, C, W	E	S	P, R	DAL,MSI,SOA
M55342^05@10#0&	10,000	200 (char. E, H) or 225 (char. K, M)	E, H, K, M	B, C, W	E, H, K, N	S	P, R	DAL,MSI,SOA
M55342^05@10#2&	10,200	200 (char. E, H) or 225 (char. K, M)	E, H, K, M	B, C, W	E	S	P, R	DAL,MSI,SOA
M55342^05@10#5&	10,500	200 (char. E, H) or 225 (char. K, M)	E, H, K, M	B, C, W	E	S	P, R	DAL,MSI,SOA
M55342^05@10#7&	10,700	200 (char. E, H) or 225 (char. K, M)	E, H, K, M	B, C, W	E	S	P, R	DAL,MSI,SOA
M55342^05@11#0&	11,000	200 (char. E, H) or 225 (char. K, M)	E, H, K, M	B, C, W	E, H, K	S	P, R	DAL,MSI,SOA
M55342^05@11#3&	11,300	200 (char. E, H) or 225 (char. K, M)	E, H, K, M	B, C, W	E	S	P, R	DAL,MSI,SOA
M55342^05@11#5&	11,500	200 (char. E, H) or 225 (char. K, M)	E, H, K, M	B, C, W	E	S	P, R	DAL,MSI,SOA
M55342^05@11#8&	11,800	200 (char. E, H) or 225 (char. K, M)	E, H, K, M	B, C, W	E	S	P, R	DAL,MSI,SOA
M55342^05@12#0&	12,000	200 (char. E, H) or 225 (char. K, M)	E, H, K, M	B, C, W	H, K, N	S	P, R	DAL,MSI,SOA
M55342^05@12#1&	12,100	200 (char. E, H) or 225 (char. K, M)	E, H, K, M	B, C, W	E	S	P, R	DAL,MSI,SOA
M55342^05@12#4&	12,400	200 (char. E, H) or 225 (char. K, M)	E, H, K, M	B, C, W	E	S	P, R	DAL,MSI,SOA
M55342^05@12#7&	12,700	200 (char. E, H) or 225 (char. K, M)	E, H, K, M	B, C, W	E	S	P, R	DAL,MSI,SOA
M55342^05@13#0&	13,000	200 (char. E, H) or 225 (char. K, M)	E, H, K, M	B, C, W	E, H, K	S	P, R	DAL,MSI,SOA
M55342^05@13#3&	13,300	200 (char. E, H) or 225 (char. K, M)	E, H, K, M	B, C, W	E	S	P, R	DAL,MSI,SOA
M55342^05@13#7&	13,700	200 (char. E, H) or 225 (char. K, M)	E, H, K, M	B, C, W	E	S	P, R	DAL,MSI,SOA
M55342^05@14#0&	14,000	200 (char. E, H) or 225 (char. K, M)	E, H, K, M	B, C, W	E	S	P, R	DAL,MSI,SOA
M55342^05@14#3&	14,300	200 (char. E, H) or 225 (char. K, M)	E, H, K, M	B, C, W	E	S	P, R	DAL,MSI,SOA

M55342^05@14#7&	14,700	200 (char. E, H) or 225 (char. K, M)	E, H, K, M	B, C, W	E	S	P, R	DAL,MSI,SOA
M55342^05@15#0&	15,000	200 (char. E, H) or 225 (char. K, M)	E, H, K, M	B, C, W	E, H, K, N	S	P, R	DAL,MSI,SOA
M55342^05@15#4&	15,400	200 (char. E, H) or 225 (char. K, M)	E, H, K, M	B, C, W	E	S	P, R	DAL,MSI,SOA
M55342^05@15#8&	15,800	200 (char. E, H) or 225 (char. K, M)	E, H, K, M	B, C, W	E	S	P, R	DAL,MSI,SOA
M55342^05@16#0&	16,000	200 (char. E, H) or 225 (char. K, M)	E, H, K, M	B, C, W	H, K	S	P, R	DAL,MSI,SOA
M55342^05@16#2&	16,200	200 (char. E, H) or 225 (char. K, M)	E, H, K, M	B, C, W	E	S	P, R	DAL,MSI,SOA
M55342^05@16#5&	16,500	200 (char. E, H) or 225 (char. K, M)	E, H, K, M	B, C, W	E	S	P, R	DAL,MSI,SOA
M55342^05@16#9&	16,900	200 (char. E, H) or 225 (char. K, M)	E, H, K, M	B, C, W	E	S	P, R	DAL,MSI,SOA
M55342^05@17#4&	17,400	200 (char. E, H) or 225 (char. K, M)	E, H, K, M	B, C, W	E	S	P, R	DAL,MSI,SOA
M55342^05@17#8&	17,800	200 (char. E, H) or 225 (char. K, M)	E, H, K, M	B, C, W	E	S	P, R	DAL,MSI,SOA
M55342^05@18#0&	18,000	200 (char. E, H) or 225 (char. K, M)	E, H, K, M	B, C, W	H, K, N	S	P, R	DAL,MSI,SOA
M55342^05@18#2&	18,200	200 (char. E, H) or 225 (char. K, M)	E, H, K, M	B, C, W	E	S	P, R	DAL,MSI,SOA
M55342^05@18#7&	18,700	200 (char. E, H) or 225 (char. K, M)	E, H, K, M	B, C, W	E	S	P, R	DAL,MSI,SOA
M55342^05@19#1&	19,100	200 (char. E, H) or 225 (char. K, M)	E, H, K, M	B, C, W	E	S	P, R	DAL,MSI,SOA
M55342^05@19#6&	19,600	200 (char. E, H) or 225 (char. K, M)	E, H, K, M	B, C, W	E	S	P, R	DAL,MSI,SOA
M55342^05@20#0&	20,000	200 (char. E, H) or 225 (char. K, M)	E, H, K, M	B, C, W	E, H, K, N	S	P, R	DAL,MSI,SOA
M55342^05@20#5&	20,500	200 (char. E, H) or 225 (char. K, M)	E, H, K, M	B, C, W	E	S	P, R	DAL,MSI,SOA
M55342^05@21#0&	21,000	200 (char. E, H) or 225 (char. K, M)	E, H, K, M	B, C, W	E	S	P, R	DAL,MSI,SOA
M55342^05@21#5&	21,500	200 (char. E, H) or 225 (char. K, M)	E, H, K, M	B, C, W	E	S	P, R	DAL,MSI,SOA
M55342^05@22#0&	22,000	200 (char. E, H) or 225 (char. K, M)	E, H, K, M	B, C, W	H, K, N	S	P, R	DAL,MSI,SOA
M55342^05@22#1&	22,100	200 (char. E, H) or 225 (char. K, M)	E, H, K, M	B, C, W	E	S	P, R	DAL,MSI,SOA
M55342^05@22#6&	22,600	200 (char. E, H) or 225 (char. K, M)	E, H, K, M	B, C, W	E	S	P, R	DAL,MSI,SOA
M55342^05@23#2&	23,200	200 (char. E, H) or 225 (char. K, M)	E, H, K, M	B, C, W	E	S	P, R	DAL,MSI,SOA
M55342^05@23#7&	23,700	200 (char. E, H) or 225 (char. K, M)	E, H, K, M	B, C, W	E	S	P, R	DAL,MSI,SOA
M55342^05@24#0&	24,000	200 (char. E, H) or 225 (char. K, M)	E, H, K, M	B, C, W	H, K	S	P, R	DAL,MSI,SOA
M55342^05@24#3&	24,300	200 (char. E, H) or 225 (char. K, M)	E, H, K, M	B, C, W	E	S	P, R	DAL,MSI,SOA
M55342^05@24#9&	24,900	200 (char. E, H) or 225 (char. K, M)	E, H, K, M	B, C, W	E	S	P, R	DAL,MSI,SOA
M55342^05@25#5&	25,500	200 (char. E, H) or 225 (char. K, M)	E, H, K, M	B, C, W	E	S	P, R	DAL,MSI,SOA
M55342^05@26#1&	26,100	200 (char. E, H) or 225 (char. K, M)	E, H, K, M	B, C, W	E	S	P, R	DAL,MSI,SOA
M55342^05@26#7&	26,700	200 (char. E, H) or 225 (char. K, M)	E, H, K, M	B, C, W	E	S	P, R	DAL,MSI,SOA
M55342^05@27#0&	27,000	200 (char. E, H) or 225 (char. K, M)	E, H, K, M	B, C, W	H, K, N	S	P, R	DAL,MSI,SOA
M55342^05@27#4&	27,400	200 (char. E, H) or 225 (char. K, M)	E, H, K, M	B, C, W	E	S	P, R	DAL,MSI,SOA
M55342^05@28#0&	28,000	200 (char. E, H) or 225 (char. K, M)	E, H, K, M	B, C, W	E	S	P, R	DAL,MSI,SOA
M55342^05@28#7&	28,700	200 (char. E, H) or 225 (char. K, M)	E, H, K, M	B, C, W	E	S	P, R	DAL,MSI,SOA
M55342^05@29#4&	29,400	200 (char. E, H) or 225 (char. K, M)	E, H, K, M	B, C, W	E	S	P, R	DAL,MSI,SOA
M55342^05@30#0&	30,000	200 (char. E, H) or 225 (char. K, M)	E, H, K, M	B, C, W	H, K	S	P, R	DAL,MSI,SOA
M55342^05@30#1&	30,100	200 (char. E, H) or 225 (char. K, M)	E, H, K, M	B, C, W	E	S	P, R	DAL,MSI,SOA
M55342^05@30#9&	30,900	200 (char. E, H) or 225 (char. K, M)	E, H, K, M	B, C, W	E	S	P, R	DAL,MSI,SOA
M55342^05@31#6&	31,600	200 (char. E, H) or 225 (char. K, M)	E, H, K, M	B, C, W	E	S	P, R	DAL,MSI,SOA
M55342^05@32#4&	32,400	200 (char. E, H) or 225 (char. K, M)	E, H, K, M	B, C, W	E	S	P, R	DAL,MSI,SOA
M55342^05@33#0&	33,000	200 (char. E, H) or 225 (char. K, M)	E, H, K, M	B, C, W	H, K, N	S	P, R	DAL,MSI,SOA
M55342^05@33#2&	33,200	200 (char. E, H) or 225 (char. K, M)	E, H, K, M	B, C, W	E	S	P, R	DAL,MSI,SOA
M55342^05@34#0&	34,000	200 (char. E, H) or 225 (char. K, M)	E, H, K, M	B, C, W	E	S	P, R	DAL,MSI,SOA
M55342^05@34#8&	34,800	200 (char. E, H) or 225 (char. K, M)	E, H, K, M	B, C, W	E	S	P, R	DAL,MSI,SOA
M55342^05@35#7&	35,700	200 (char. E, H) or 225 (char. K, M)	E, H, K, M	B, C, W	E	S	P, R	DAL,MSI,SOA
M55342^05@36#0&	36,000	200 (char. E, H) or 225 (char. K, M)	E, H, K, M	B, C, W	H, K	S	P, R	DAL,MSI,SOA
M55342^05@36#5&	36,500	200 (char. E, H) or 225 (char. K, M)	E, H, K, M	B, C, W	E	S	P, R	DAL,MSI,SOA

M55342^05@37#4&	37,400	200 (char. E, H) or 225 (char. K, M)	E, H, K, M	B, C, W	E	S	P, R	DAL,MSI,SOA
M55342^05@38#3&	38,300	200 (char. E, H) or 225 (char. K, M)	E, H, K, M	B, C, W	E	S	P, R	DAL,MSI,SOA
M55342^05@39#0&	39,000	200 (char. E, H) or 225 (char. K, M)	E, H, K, M	B, C, W	H, K, N	S	P, R	DAL,MSI,SOA
M55342^05@39#2&	39,200	200 (char. E, H) or 225 (char. K, M)	E, H, K, M	B, C, W	E	S	P, R	DAL,MSI,SOA
M55342^05@40#2&	40,200	200 (char. E, H) or 225 (char. K, M)	E, H, K, M	B, C, W	E	S	P, R	DAL,MSI,SOA
M55342^05@41#2&	41,200	200 (char. E, H) or 225 (char. K, M)	E, H, K, M	B, C, W	E	S	P, R	DAL,MSI,SOA
M55342^05@42#2&	42,200	200 (char. E, H) or 225 (char. K, M)	E, H, K, M	B, C, W	E	S	P, R	DAL,MSI,SOA
M55342^05@43#0&	43,000	200 (char. E, H) or 225 (char. K, M)	E, H, K, M	B, C, W	H, K	S	P, R	DAL,MSI,SOA
M55342^05@43#2&	43,200	200 (char. E, H) or 225 (char. K, M)	E, H, K, M	B, C, W	E	S	P, R	DAL,MSI,SOA
M55342^05@44#2&	44,200	200 (char. E, H) or 225 (char. K, M)	E, H, K, M	B, C, W	E	S	P, R	DAL,MSI,SOA
M55342^05@45#3&	45,300	200 (char. E, H) or 225 (char. K, M)	E, H, K, M	B, C, W	E	S	P, R	DAL,MSI,SOA
M55342^05@46#4&	46,400	200 (char. E, H) or 225 (char. K, M)	E, H, K, M	B, C, W	E	S	P, R	DAL,MSI,SOA
M55342^05@47#0&	47,000	200 (char. E, H) or 225 (char. K, M)	E, H, K, M	B, C, W	H, K, N	S	P, R	DAL,MSI,SOA
M55342^05@47#5&	47,500	200 (char. E, H) or 225 (char. K, M)	E, H, K, M	B, C, W	E	S	P, R	DAL,MSI,SOA
M55342^05@48#7&	48,700	200 (char. E, H) or 225 (char. K, M)	E, H, K, M	B, C, W	E	S	P, R	DAL,MSI,SOA
M55342^05@49#9&	49,900	200 (char. E, H) or 225 (char. K, M)	E, H, K, M	B, C, W	E	S	P, R	DAL,MSI,SOA
M55342^05@51#0&	51,000	200 (char. E, H) or 225 (char. K, M)	E, H, K, M	B, C, W	H, K	S	P, R	DAL,MSI,SOA
M55342^05@51#1&	51,100	200 (char. E, H) or 225 (char. K, M)	E, H, K, M	B, C, W	E	S	P, R	DAL,MSI,SOA
M55342^05@52#3&	52,300	200 (char. E, H) or 225 (char. K, M)	E, H, K, M	B, C, W	E	S	P, R	DAL,MSI,SOA
M55342^05@53#6&	53,600	200 (char. E, H) or 225 (char. K, M)	E, H, K, M	B, C, W	E	S	P, R	DAL,MSI,SOA
M55342^05@54#9&	54,900	200 (char. E, H) or 225 (char. K, M)	E, H, K, M	B, C, W	E	S	P, R	DAL,MSI,SOA
M55342^05@56#0&	56,000	200 (char. E, H) or 225 (char. K, M)	E, H, K, M	B, C, W	H, K, N	S	P, R	DAL,MSI,SOA
M55342^05@56#2&	56,200	200 (char. E, H) or 225 (char. K, M)	E, H, K, M	B, C, W	E	S	P, R	DAL,MSI,SOA
M55342^05@57#6&	57,600	200 (char. E, H) or 225 (char. K, M)	E, H, K, M	B, C, W	E	S	P, R	DAL,MSI,SOA
M55342^05@59#0&	59,000	200 (char. E, H) or 225 (char. K, M)	E, H, K, M	B, C, W	E	S	P, R	DAL,MSI,SOA
M55342^05@60#4&	60,400	200 (char. E, H) or 225 (char. K, M)	E, H, K, M	B, C, W	E	S	P, R	DAL,MSI,SOA
M55342^05@61#9&	61,900	200 (char. E, H) or 225 (char. K, M)	E, H, K, M	B, C, W	E	S	P, R	DAL,MSI,SOA
M55342^05@62#0&	62,000	200 (char. E, H) or 225 (char. K, M)	E, H, K, M	B, C, W	H, K	S	P, R	DAL,MSI,SOA
M55342^05@63#4&	63,400	200 (char. E, H) or 225 (char. K, M)	E, H, K, M	B, C, W	E	S	P, R	DAL,MSI,SOA
M55342^05@64#9&	64,900	200 (char. E, H) or 225 (char. K, M)	E, H, K, M	B, C, W	E	S	P, R	DAL,MSI,SOA
M55342^05@66#5&	66,500	200 (char. E, H) or 225 (char. K, M)	E, H, K, M	B, C, W	E	S	P, R	DAL,MSI,SOA
M55342^05@68#0&	68,000	200 (char. E, H) or 225 (char. K, M)	E, H, K, M	B, C, W	H, K, N	S	P, R	DAL,MSI,SOA
M55342^05@68#1&	68,100	200 (char. E, H) or 225 (char. K, M)	E, H, K, M	B, C, W	E	S	P, R	DAL,MSI,SOA
M55342^05@69#8&	69,800	200 (char. E, H) or 225 (char. K, M)	E, H, K, M	B, C, W	E	S	P, R	DAL,MSI,SOA
M55342^05@71#5&	71,500	200 (char. E, H) or 225 (char. K, M)	E, H, K, M	B, C, W	E	S	P, R	DAL,MSI,SOA
M55342^05@73#2&	73,200	200 (char. E, H) or 225 (char. K, M)	E, H, K, M	B, C, W	E	S	P, R	DAL,MSI,SOA
M55342^05@75#0&	75,000	200 (char. E, H) or 225 (char. K, M)	E, H, K, M	B, C, W	E, H, K	S	P, R	DAL,MSI,SOA
M55342^05@76#8&	76,800	200 (char. E, H) or 225 (char. K, M)	E, H, K, M	B, C, W	E	S	P, R	DAL,MSI,SOA
M55342^05@78#7&	78,700	200 (char. E, H) or 225 (char. K, M)	E, H, K, M	B, C, W	E	S	P, R	DAL,MSI,SOA
M55342^05@80#6&	80,600	200 (char. E, H) or 225 (char. K, M)	E, H, K, M	B, C, W	E	S	P, R	DAL,MSI,SOA
M55342^05@82#0&	82,000	200 (char. E, H) or 225 (char. K, M)	E, H, K, M	B, C, W	H, K, N	S	P, R	DAL,MSI,SOA
M55342^05@82#5&	82,500	200 (char. E, H) or 225 (char. K, M)	E, H, K, M	B, C, W	E	S	P, R	DAL,MSI,SOA
M55342^05@84#5&	84,500	200 (char. E, H) or 225 (char. K, M)	E, H, K, M	B, C, W	E	S	P, R	DAL,MSI,SOA
M55342^05@86#6&	86,600	200 (char. E, H) or 225 (char. K, M)	E, H, K, M	B, C, W	E	S	P, R	DAL,MSI,SOA
M55342^05@88#7&	88,700	200 (char. E, H) or 225 (char. K, M)	E, H, K, M	B, C, W	E	S	P, R	DAL,MSI,SOA
M55342^05@90#9&	90,900	200 (char. E, H) or 225 (char. K, M)	E, H, K, M	B, C, W	E	S	P, R	DAL,MSI,SOA
M55342^05@91#0&	91,000	200 (char. E, H) or 225 (char. K, M)	E, H, K, M	B, C, W	H, K	S	P, R	DAL,MSI,SOA

M55342^05@93#1&	93,100	200 (char. E, H) or 225 (char. K, M)	E, H, K, M	B, C, W	E	S	P, R	DAL,MSI,SOA
M55342^05@95#3&	95,300	200 (char. E, H) or 225 (char. K, M)	E, H, K, M	B, C, W	E	S	P, R	DAL,MSI,SOA
M55342^05@97#6&	97,600	200 (char. E, H) or 225 (char. K, M)	E, H, K, M	B, C, W	E	S	P, R	DAL,MSI,SOA
M55342^05@10#0&	100,000	200 (char. E, H) or 225 (char. K, M)	E, H, K, M	B, C, W	E, H, K, N	S	P, R	DAL,MSI,SOA
M55342^05@10#2&	102,000	200 (char. E, H) or 225 (char. K, M)	E, H, K, M	B, C, W	E	S	P, R	DAL,MSI,SOA
M55342^05@10#5&	105,000	200 (char. E, H) or 225 (char. K, M)	E, H, K, M	B, C, W	E	S	P, R	DAL,MSI,SOA
M55342^05@10#7&	107,000	200 (char. E, H) or 225 (char. K, M)	E, H, K, M	B, C, W	E	S	P, R	DAL,MSI,SOA
M55342^05@11#0&	110,000	200 (char. E, H) or 225 (char. K, M)	E, H, K, M	B, C, W	E, H, K	S	P, R	DAL,MSI,SOA
M55342^05@11#3&	113,000	200 (char. E, H) or 225 (char. K, M)	E, H, K, M	B, C, W	E	S	P, R	DAL,MSI,SOA
M55342^05@11#5&	115,000	200 (char. E, H) or 225 (char. K, M)	E, H, K, M	B, C, W	E	S	P, R	DAL,MSI,SOA
M55342^05@11#8&	118,000	200 (char. E, H) or 225 (char. K, M)	E, H, K, M	B, C, W	E	S	P, R	DAL,MSI,SOA
M55342^05@12#0&	120,000	200 (char. E, H) or 225 (char. K, M)	E, H, K, M	B, C, W	H, K, N	S	P, R	DAL,MSI,SOA
M55342^05@12#1&	121,000	200 (char. E, H) or 225 (char. K, M)	E, H, K, M	B, C, W	E	S	P, R	DAL,MSI,SOA
M55342^05@12#4&	124,000	200 (char. E, H) or 225 (char. K, M)	E, H, K, M	B, C, W	E	S	P, R	DAL,MSI,SOA
M55342^05@12#7&	127,000	200 (char. E, H) or 225 (char. K, M)	E, H, K, M	B, C, W	E	S	P, R	DAL,MSI,SOA
M55342^05@13#0&	130,000	200 (char. E, H) or 225 (char. K, M)	E, H, K, M	B, C, W	E, H, K	S	P, R	DAL,MSI,SOA
M55342^05@13#3&	133,000	200 (char. E, H) or 225 (char. K, M)	E, H, K, M	B, C, W	E	S	P, R	DAL,MSI,SOA
M55342^05@13#7&	137,000	200 (char. E, H) or 225 (char. K, M)	E, H, K, M	B, C, W	E	S	P, R	DAL,MSI,SOA
M55342^05@14#0&	140,000	200 (char. E, H) or 225 (char. K, M)	E, H, K, M	B, C, W	E	S	P, R	DAL,MSI,SOA
M55342^05@14#3&	143,000	200 (char. E, H) or 225 (char. K, M)	E, H, K, M	B, C, W	E	S	P, R	DAL,MSI,SOA
M55342^05@14#7&	147,000	200 (char. E, H) or 225 (char. K, M)	E, H, K, M	B, C, W	E	S	P, R	DAL,MSI,SOA
M55342^05@15#0&	150,000	200 (char. E, H) or 225 (char. K, M)	E, H, K, M	B, C, W	E, H, K, N	S	P, R	DAL,MSI,SOA
M55342^05@15#4&	154,000	200 (char. E, H) or 225 (char. K, M)	E, H, K, M	B, C, W	E	S	P, R	DAL,MSI,SOA
M55342^05@15#8&	158,000	200 (char. E, H) or 225 (char. K, M)	E, H, K, M	B, C, W	E	S	P, R	DAL,MSI,SOA
M55342^05@16#0&	160,000	200 (char. E, H) or 225 (char. K, M)	E, H, K, M	B, C, W	H, K	S	P, R	DAL,MSI,SOA
M55342^05@16#2&	162,000	200 (char. E, H) or 225 (char. K, M)	E, H, K, M	B, C, W	E	S	P, R	DAL,MSI,SOA
M55342^05@16#5&	165,000	200 (char. E, H) or 225 (char. K, M)	E, H, K, M	B, C, W	E	S	P, R	DAL,MSI,SOA
M55342^05@16#9&	169,000	200 (char. E, H) or 225 (char. K, M)	E, H, K, M	B, C, W	E	S	P, R	DAL,MSI,SOA
M55342^05@17#4&	174,000	200 (char. E, H) or 225 (char. K, M)	E, H, K, M	B, C, W	E	S	P, R	DAL,MSI,SOA
M55342^05@17#8&	178,000	200 (char. E, H) or 225 (char. K, M)	E, H, K, M	B, C, W	E	S	P, R	DAL,MSI,SOA
M55342^05@18#0&	180,000	200 (char. E, H) or 225 (char. K, M)	E, H, K, M	B, C, W	H, K, N	S	P, R	DAL,MSI,SOA
M55342^05@18#2&	182,000	200 (char. E, H) or 225 (char. K, M)	E, H, K, M	B, C, W	E	S	P, R	DAL,MSI,SOA
M55342^05@18#7&	187,000	200 (char. E, H) or 225 (char. K, M)	E, H, K, M	B, C, W	E	S	P, R	DAL,MSI,SOA
M55342^05@19#1&	191,000	200 (char. E, H) or 225 (char. K, M)	E, H, K, M	B, C, W	E	S	P, R	DAL,MSI,SOA
M55342^05@19#6&	196,000	200 (char. E, H) or 225 (char. K, M)	E, H, K, M	B, C, W	E	S	P, R	DAL,MSI,SOA
M55342^05@20#0&	200,000	200 (char. E, H) or 225 (char. K, M)	E, H, K, M	B, C, W	E, H, K, N	S	P, R	DAL,MSI,SOA
M55342^05@20#5&	205,000	200 (char. E, H) or 225 (char. K, M)	E, H, K, M	B, C, W	E	S	P, R	DAL,MSI,SOA
M55342^05@21#0&	210,000	200 (char. E, H) or 225 (char. K, M)	E, H, K, M	B, C, W	E	S	P, R	DAL,MSI,SOA
M55342^05@21#5&	215,000	200 (char. E, H) or 225 (char. K, M)	E, H, K, M	B, C, W	E	S	P, R	DAL,MSI,SOA
M55342^05@22#0&	220,000	200 (char. E, H) or 225 (char. K, M)	E, H, K, M	B, C, W	H, K, N	S	P, R	DAL,MSI,SOA
M55342^05@22#1&	221,000	200 (char. E, H) or 225 (char. K, M)	E, H, K, M	B, C, W	E	S	P, R	DAL,MSI,SOA
M55342^05@22#6&	226,000	200 (char. E, H) or 225 (char. K, M)	E, H, K, M	B, C, W	E	S	P, R	DAL,MSI,SOA
M55342^05@23#2&	232,000	200 (char. E, H) or 225 (char. K, M)	E, H, K, M	B, C, W	E	S	P, R	DAL,MSI,SOA
M55342^05@23#7&	237,000	200 (char. E, H) or 225 (char. K, M)	E, H, K, M	B, C, W	E	S	P, R	DAL,MSI,SOA
M55342^05@24#0&	240,000	200 (char. E, H) or 225 (char. K, M)	E, H, K, M	B, C, W	H, K	S	P, R	DAL,MSI,SOA
M55342^05@24#3&	243,000	200 (char. E, H) or 225 (char. K, M)	E, H, K, M	B, C, W	E	S	P, R	DAL,MSI,SOA
M55342^05@24#9&	249,000	200 (char. E, H) or 225 (char. K, M)	E, H, K, M	B, C, W	E	S	P, R	DAL,MSI,SOA

M55342^05@25#5&	255,000	200 (char. E, H) or 225 (char. K, M)	E, H, K, M	B, C, W	E	S	P, R	DAL,MSI,SOA
M55342^05@26#1&	261,000	200 (char. E, H) or 225 (char. K, M)	E, H, K, M	B, C, W	E	S	P, R	DAL,MSI,SOA
M55342^05@26#7&	267,000	200 (char. E, H) or 225 (char. K, M)	E, H, K, M	B, C, W	E	S	P, R	DAL,MSI,SOA
M55342^05@27#0&	270,000	200 (char. E, H) or 225 (char. K, M)	E, H, K, M	B, C, W	H, K, N	S	P, R	DAL,MSI,SOA
M55342^05@27#4&	274,000	200 (char. E, H) or 225 (char. K, M)	E, H, K, M	B, C, W	E	S	P, R	DAL,MSI,SOA
M55342^05@28#0&	280,000	200 (char. E, H) or 225 (char. K, M)	E, H, K, M	B, C, W	E	S	P, R	DAL,MSI,SOA
M55342^05@28#7&	287,000	200 (char. E, H) or 225 (char. K, M)	E, H, K, M	B, C, W	E	S	P, R	DAL,MSI,SOA
M55342^05@29#4&	294,000	200 (char. E, H) or 225 (char. K, M)	E, H, K, M	B, C, W	E	S	P, R	DAL,MSI,SOA
M55342^05@30#0&	300,000	200 (char. E, H) or 225 (char. K, M)	E, H, K, M	B, C, W	H, K	S	P, R	DAL,MSI,SOA
M55342^05@30#1&	301,000	200 (char. E, H) or 225 (char. K, M)	E, H, K, M	B, C, W	E	S	P, R	DAL,MSI,SOA
M55342^05@30#9&	309,000	200 (char. E, H) or 225 (char. K, M)	E, H, K, M	B, C, W	E	S	P, R	DAL,MSI,SOA
M55342^05@31#6&	316,000	200 (char. E, H) or 225 (char. K, M)	E, H, K, M	B, C, W	E	S	P, R	DAL,MSI,SOA
M55342^05@32#4&	324,000	200 (char. E, H) or 225 (char. K, M)	E, H, K, M	B, C, W	E	S	P, R	DAL,MSI,SOA
M55342^05@33#0&	330,000	200 (char. E, H) or 225 (char. K, M)	E, H, K, M	B, C, W	H, K, N	S	P, R	DAL,MSI,SOA
M55342^05@33#2&	332,000	200 (char. E, H) or 225 (char. K, M)	E, H, K, M	B, C, W	E	S	P, R	DAL,MSI,SOA
M55342^05@34#0&	340,000	200 (char. E, H) or 225 (char. K, M)	E, H, K, M	B, C, W	E	S	P, R	DAL,MSI,SOA
M55342^05@34#8&	348,000	200 (char. E, H) or 225 (char. K, M)	E, H, K, M	B, C, W	E	S	P, R	DAL,MSI,SOA
M55342^05@35#7&	357,000	200 (char. E, H) or 225 (char. K, M)	E, H, K, M	B, C, W	E	S	P, R	DAL,MSI,SOA
M55342^05@36#0&	360,000	200 (char. E, H) or 225 (char. K, M)	E, H, K, M	B, C, W	H, K	S	P, R	DAL,MSI,SOA
M55342^05@36#5&	365,000	200 (char. E, H) or 225 (char. K, M)	E, H, K, M	B, C, W	E	S	P, R	DAL,MSI,SOA
M55342^05@37#4&	374,000	200 (char. E, H) or 225 (char. K, M)	E, H, K, M	B, C, W	E	S	P, R	DAL,MSI,SOA
M55342^05@38#3&	383,000	200 (char. E, H) or 225 (char. K, M)	E, H, K, M	B, C, W	E	S	P, R	DAL,MSI,SOA
M55342^05@39#0&	390,000	200 (char. E, H) or 225 (char. K, M)	E, H, K, M	B, C, W	H, K, N	S	P, R	DAL,MSI,SOA
M55342^05@39#2&	392,000	200 (char. E, H) or 225 (char. K, M)	E, H, K, M	B, C, W	E	S	P, R	DAL,MSI,SOA
M55342^05@40#2&	402,000	200 (char. E, H) or 225 (char. K, M)	E, H, K, M	B, C, W	E	S	P, R	DAL,MSI,SOA
M55342^05@41#2&	412,000	200 (char. E, H) or 225 (char. K, M)	E, H, K, M	B, C, W	E	S	P, R	DAL,MSI,SOA
M55342^05@42#2&	422,000	200 (char. E, H) or 225 (char. K, M)	E, H, K, M	B, C, W	E	S	P, R	DAL,MSI,SOA
M55342^05@43#0&	430,000	200 (char. E, H) or 225 (char. K, M)	E, H, K, M	B, C, W	H, K	S	P, R	DAL,MSI,SOA
M55342^05@43#2&	432,000	200 (char. E, H) or 225 (char. K, M)	E, H, K, M	B, C, W	E	S	P, R	DAL,MSI,SOA
M55342^05@44#2&	442,000	200 (char. E, H) or 225 (char. K, M)	E, H, K, M	B, C, W	E	S	P, R	DAL,MSI,SOA
M55342^05@45#3&	453,000	200 (char. E, H) or 225 (char. K, M)	E, H, K, M	B, C, W	E	S	P, R	DAL,MSI,SOA
M55342^05@46#4&	464,000	200 (char. E, H) or 225 (char. K, M)	E, H, K, M	B, C, W	E	S	P, R	DAL,MSI,SOA
M55342^05@47#0&	470,000	200 (char. E, H) or 225 (char. K, M)	E, H, K, M	B, C, W	H, K, N	S	P, R	DAL,MSI,SOA
M55342^05@47#5&	475,000	200 (char. E, H) or 225 (char. K, M)	E, H, K, M	B, C, W	E	S	P, R	DAL,MSI,SOA
M55342^05@48#7&	487,000	200 (char. E, H) or 225 (char. K, M)	E, H, K, M	B, C, W	E	S	P, R	DAL,MSI,SOA
M55342^05@49#9&	499,000	200 (char. E, H) or 225 (char. K, M)	E, H, K, M	B, C, W	E	S	P, R	DAL,MSI,SOA
M55342^05@51#0&	510,000	200 (char. E, H) or 225 (char. K, M)	E, H, K, M	B, C, W	H, K	S	P, R	DAL,MSI,SOA
M55342^05@51#1&	511,000	200 (char. E, H) or 225 (char. K, M)	E, H, K, M	B, C, W	E	S	P, R	DAL,MSI,SOA
M55342^05@52#3&	523,000	200 (char. E, H) or 225 (char. K, M)	E, H, K, M	B, C, W	E	S	P, R	DAL,MSI,SOA
M55342^05@53#6&	536,000	200 (char. E, H) or 225 (char. K, M)	E, H, K, M	B, C, W	E	S	P, R	DAL,MSI,SOA
M55342^05@54#9&	549,000	200 (char. E, H) or 225 (char. K, M)	E, H, K, M	B, C, W	E	S	P, R	DAL,MSI,SOA
M55342^05@56#0&	560,000	200 (char. E, H) or 225 (char. K, M)	E, H, K, M	B, C, W	H, K, N	S	P, R	DAL,MSI,SOA
M55342^05@56#2&	562,000	200 (char. E, H) or 225 (char. K, M)	E, H, K, M	B, C, W	E	S	P, R	DAL,MSI,SOA
M55342^05@57#6&	576,000	200 (char. E, H) or 225 (char. K, M)	E, H, K, M	B, C, W	E	S	P, R	DAL,MSI,SOA
M55342^05@59#0&	590,000	200 (char. E, H) or 225 (char. K, M)	E, H, K, M	B, C, W	E	S	P, R	DAL,MSI,SOA
M55342^05@60#4&	604,000	200 (char. E, H) or 225 (char. K, M)	E, H, K, M	B, C, W	E	S	P, R	DAL,MSI,SOA
M55342^05@61#9&	619,000	200 (char. E, H) or 225 (char. K, M)	E, H, K, M	B, C, W	E	S	P, R	DAL,MSI,SOA

M55342^05@62#0&	620,000	200 (char. E, H) or 225 (char. K, M)	E, H, K, M	B, C, W	H, K	S	P, R	DAL,MSI,SOA
M55342^05@63#4&	634,000	200 (char. E, H) or 225 (char. K, M)	E, H, K, M	B, C, W	E	S	P, R	DAL,MSI,SOA
M55342^05@64#9&	649,000	200 (char. E, H) or 225 (char. K, M)	E, H, K, M	B, C, W	E	S	P, R	DAL,MSI,SOA
M55342^05@66#5&	665,000	200 (char. E, H) or 225 (char. K, M)	E, H, K, M	B, C, W	E	S	P, R	DAL,MSI,SOA
M55342^05@68#0&	680,000	200 (char. E, H) or 225 (char. K, M)	E, H, K, M	B, C, W	H, K, N	S	P, R	DAL,MSI,SOA
M55342^05@68#1&	681,000	200 (char. E, H) or 225 (char. K, M)	E, H, K, M	B, C, W	E	S	P, R	DAL,MSI,SOA
M55342^05@69#8&	698,000	200 (char. E, H) or 225 (char. K, M)	E, H, K, M	B, C, W	E	S	P, R	DAL,MSI,SOA
M55342^05@71#5&	715,000	200 (char. E, H) or 225 (char. K, M)	E, H, K, M	B, C, W	E	S	P, R	DAL,MSI,SOA
M55342^05@73#2&	732,000	200 (char. E, H) or 225 (char. K, M)	E, H, K, M	B, C, W	E	S	P, R	DAL,MSI,SOA
M55342^05@75#0&	750,000	200 (char. E, H) or 225 (char. K, M)	E, H, K, M	B, C, W	E, H, K	S	P, R	DAL,MSI,SOA
M55342^05@76#8&	768,000	200 (char. E, H) or 225 (char. K, M)	E, H, K, M	B, C, W	E	S	P, R	DAL,MSI,SOA
M55342^05@78#7&	787,000	200 (char. E, H) or 225 (char. K, M)	E, H, K, M	B, C, W	E	S	P, R	DAL,MSI,SOA
M55342^05@80#6&	806,000	200 (char. E, H) or 225 (char. K, M)	E, H, K, M	B, C, W	E	S	P, R	DAL,MSI,SOA
M55342^05@82#0&	820,000	200 (char. E, H) or 225 (char. K, M)	E, H, K, M	B, C, W	H, K, N	S	P, R	DAL,MSI,SOA
M55342^05@82#5&	825,000	200 (char. E, H) or 225 (char. K, M)	E, H, K, M	B, C, W	E	S	P, R	DAL,MSI,SOA
M55342^05@84#5&	845,000	200 (char. E, H) or 225 (char. K, M)	E, H, K, M	B, C, W	E	S	P, R	DAL,MSI,SOA
M55342^05@86#6&	866,000	200 (char. E, H) or 225 (char. K, M)	E, H, K, M	B, C, W	E	S	P, R	DAL,MSI,SOA
M55342^05@88#7&	887,000	200 (char. E, H) or 225 (char. K, M)	E, H, K, M	B, C, W	E	S	P, R	DAL,MSI,SOA
M55342^05@90#9&	909,000	200 (char. E, H) or 225 (char. K, M)	E, H, K, M	B, C, W	E	S	P, R	DAL,MSI,SOA
M55342^05@91#0&	910,000	200 (char. E, H) or 225 (char. K, M)	E, H, K, M	B, C, W	H, K	S	P, R	DAL,MSI,SOA
M55342^05@93#1&	931,000	200 (char. E, H) or 225 (char. K, M)	E, H, K, M	B, C, W	E	S	P, R	DAL,MSI,SOA
M55342^05@95#3&	953,000	200 (char. E, H) or 225 (char. K, M)	E, H, K, M	B, C, W	E	S	P, R	DAL,MSI,SOA
M55342^05@97#6&	976,000	200 (char. E, H) or 225 (char. K, M)	E, H, K, M	B, C, W	E	S	P, R	DAL,MSI,SOA
M55342^05@1#00&	1,000,000	200 (char. E, H) or 225 (char. K, M)	E, H, K, M	B, C, W	E, T, L, P	S	P, R	DAL,MSI,SOA
M55342^05@1#02&	1,020,000	200 (char. E, H) or 225 (char. K, M)	E, H, K, M	B, C, W	F	S	P, R	DAL,SOA
M55342^05@1#05&	1,050,000	200 (char. E, H) or 225 (char. K, M)	E, H, K, M	B, C, W	F	S	P, R	DAL,SOA
M55342^05@1#07&	1,070,000	200 (char. E, H) or 225 (char. K, M)	E, H, K, M	B, C, W	F	S	P, R	DAL,SOA
M55342^05@1#10&	1,100,000	200 (char. E, H) or 225 (char. K, M)	E, H, K, M	B, C, W	F, T, L	S	P, R	DAL,SOA
M55342^05@1#13&	1,130,000	200 (char. E, H) or 225 (char. K, M)	E, H, K, M	B, C, W	F	S	P, R	DAL,SOA
M55342^05@1#15&	1,150,000	200 (char. E, H) or 225 (char. K, M)	E, H, K, M	B, C, W	F	S	P, R	DAL,SOA
M55342^05@1#18&	1,180,000	200 (char. E, H) or 225 (char. K, M)	E, H, K, M	B, C, W	F	S	P, R	DAL,SOA
M55342^05@1#20&	1,200,000	200 (char. E, H) or 225 (char. K, M)	E, H, K, M	B, C, W	T, L, P	S	P, R	DAL,SOA
M55342^05@1#21&	1,210,000	200 (char. E, H) or 225 (char. K, M)	E, H, K, M	B, C, W	F	S	P, R	DAL,SOA
M55342^05@1#24&	1,240,000	200 (char. E, H) or 225 (char. K, M)	E, H, K, M	B, C, W	F	S	P, R	DAL,SOA
M55342^05@1#27&	1,270,000	200 (char. E, H) or 225 (char. K, M)	E, H, K, M	B, C, W	F	S	P, R	DAL,SOA
M55342^05@1#30&	1,300,000	200 (char. E, H) or 225 (char. K, M)	E, H, K, M	B, C, W	F, T, L	S	P, R	DAL,SOA
M55342^05@1#33&	1,330,000	200 (char. E, H) or 225 (char. K, M)	E, H, K, M	B, C, W	F	S	P, R	DAL,SOA
M55342^05@1#37&	1,370,000	200 (char. E, H) or 225 (char. K, M)	E, H, K, M	B, C, W	F	S	P, R	DAL,SOA
M55342^05@1#40&	1,400,000	200 (char. E, H) or 225 (char. K, M)	E, H, K, M	B, C, W	F	S	P, R	DAL,SOA
M55342^05@1#43&	1,430,000	200 (char. E, H) or 225 (char. K, M)	E, H, K, M	B, C, W	F	S	P, R	DAL,SOA
M55342^05@1#47&	1,470,000	200 (char. E, H) or 225 (char. K, M)	E, H, K, M	B, C, W	F	S	P, R	DAL,SOA
M55342^05@1#50&	1,500,000	200 (char. E, H) or 225 (char. K, M)	E, H, K, M	B, C, W	F, T, L, P	S	P, R	DAL,SOA
M55342^05@1#54&	1,540,000	200 (char. E, H) or 225 (char. K, M)	E, H, K, M	B, C, W	F	S	P, R	DAL,SOA
M55342^05@1#58&	1,580,000	200 (char. E, H) or 225 (char. K, M)	E, H, K, M	B, C, W	F	S	P, R	DAL,SOA
M55342^05@1#60&	1,600,000	200 (char. E, H) or 225 (char. K, M)	E, H, K, M	B, C, W	T, L	S	P, R	DAL,SOA
M55342^05@1#62&	1,620,000	200 (char. E, H) or 225 (char. K, M)	E, H, K, M	B, C, W	F	S	P, R	DAL,SOA
M55342^05@1#65&	1,650,000	200 (char. E, H) or 225 (char. K, M)	E, H, K, M	B, C, W	F	S	P, R	DAL,SOA

M55342^05@1#69&	1,690,000	200 (char. E, H) or 225 (char. K, M)	E, H, K, M	B, C, W	F	S	P, R	DAL,SOA
M55342^05@1#74&	1,740,000	200 (char. E, H) or 225 (char. K, M)	E, H, K, M	B, C, W	F	S	P, R	DAL,SOA
M55342^05@1#78&	1,780,000	200 (char. E, H) or 225 (char. K, M)	E, H, K, M	B, C, W	F	S	P, R	DAL,SOA
M55342^05@1#80&	1,800,000	200 (char. E, H) or 225 (char. K, M)	E, H, K, M	B, C, W	T, L, P	S	P, R	DAL,SOA
M55342^05@1#82&	1,820,000	200 (char. E, H) or 225 (char. K, M)	E, H, K, M	B, C, W	F	S	P, R	DAL,SOA
M55342^05@1#87&	1,870,000	200 (char. E, H) or 225 (char. K, M)	E, H, K, M	B, C, W	F	S	P, R	DAL,SOA
M55342^05@1#91&	1,910,000	200 (char. E, H) or 225 (char. K, M)	E, H, K, M	B, C, W	F	S	P, R	DAL,SOA
M55342^05@1#96&	1,960,000	200 (char. E, H) or 225 (char. K, M)	E, H, K, M	B, C, W	F	S	P, R	DAL,SOA
M55342^05@2#00&	2,000,000	200 (char. E, H) or 225 (char. K, M)	E, H, K, M	B, C, W	F, T, L, P	S	P, R	DAL,SOA
M55342^05@2#05&	2,050,000	200 (char. E, H) or 225 (char. K, M)	E, H, K, M	B, C, W	F	S	P, R	DAL,SOA
M55342^05@2#10&	2,100,000	200 (char. E, H) or 225 (char. K, M)	E, H, K, M	B, C, W	F	S	P, R	DAL,SOA
M55342^05@2#15&	2,150,000	200 (char. E, H) or 225 (char. K, M)	E, H, K, M	B, C, W	F	S	P, R	DAL,SOA
M55342^05@2#20&	2,200,000	200 (char. E, H) or 225 (char. K, M)	E, H, K, M	B, C, W	T, L, P	S	P, R	DAL,SOA
M55342^05@2#21&	2,210,000	200 (char. E, H) or 225 (char. K, M)	E, H, K, M	B, C, W	F	S	P, R	DAL,SOA
M55342^05@2#26&	2,260,000	200 (char. E, H) or 225 (char. K, M)	E, H, K, M	B, C, W	F	S	P, R	DAL,SOA
M55342^05@2#32&	2,320,000	200 (char. E, H) or 225 (char. K, M)	E, H, K, M	B, C, W	F	S	P, R	DAL,SOA
M55342^05@2#37&	2,370,000	200 (char. E, H) or 225 (char. K, M)	E, H, K, M	B, C, W	F	S	P, R	DAL,SOA
M55342^05@2#40&	2,400,000	200 (char. E, H) or 225 (char. K, M)	E, H, K, M	B, C, W	T, L	S	P, R	DAL,SOA
M55342^05@2#43&	2,430,000	200 (char. E, H) or 225 (char. K, M)	E, H, K, M	B, C, W	F	S	P, R	DAL,SOA
M55342^05@2#49&	2,490,000	200 (char. E, H) or 225 (char. K, M)	E, H, K, M	B, C, W	F	S	P, R	DAL,SOA
M55342^05@2#55&	2,550,000	200 (char. E, H) or 225 (char. K, M)	E, H, K, M	B, C, W	F	S	P, R	DAL,SOA
M55342^05@2#61&	2,610,000	200 (char. E, H) or 225 (char. K, M)	E, H, K, M	B, C, W	F	S	P, R	DAL,SOA
M55342^05@2#67&	2,670,000	200 (char. E, H) or 225 (char. K, M)	E, H, K, M	B, C, W	F	S	P, R	DAL,SOA
M55342^05@2#70&	2,700,000	200 (char. E, H) or 225 (char. K, M)	E, H, K, M	B, C, W	T, L, P	S	P, R	DAL,SOA
M55342^05@2#74&	2,740,000	200 (char. E, H) or 225 (char. K, M)	E, H, K, M	B, C, W	F	S	P, R	DAL,SOA
M55342^05@2#80&	2,800,000	200 (char. E, H) or 225 (char. K, M)	E, H, K, M	B, C, W	F	S	P, R	DAL,SOA
M55342^05@2#87&	2,870,000	200 (char. E, H) or 225 (char. K, M)	E, H, K, M	B, C, W	F	S	P, R	DAL,SOA
M55342^05@2#94&	2,940,000	200 (char. E, H) or 225 (char. K, M)	E, H, K, M	B, C, W	F	S	P, R	DAL,SOA
M55342^05@3#00&	3,000,000	200 (char. E, H) or 225 (char. K, M)	E, H, K, M	B, C, W	T, L	S	P, R	DAL,SOA
M55342^05@3#01&	3,010,000	200 (char. E, H) or 225 (char. K, M)	E, H, K, M	B, C, W	F	S	P, R	DAL,SOA
M55342^05@3#09&	3,090,000	200 (char. E, H) or 225 (char. K, M)	E, H, K, M	B, C, W	F	S	P, R	DAL,SOA
M55342^05@3#16&	3,160,000	200 (char. E, H) or 225 (char. K, M)	E, H, K, M	B, C, W	F	S	P, R	DAL,SOA
M55342^05@3#24&	3,240,000	200 (char. E, H) or 225 (char. K, M)	E, H, K, M	B, C, W	F	S	P, R	DAL,SOA
M55342^05@3#30&	3,300,000	200 (char. E, H) or 225 (char. K, M)	E, H, K, M	B, C, W	T, L, P	S	P, R	DAL,SOA
M55342^05@3#32&	3,320,000	200 (char. E, H) or 225 (char. K, M)	E, H, K, M	B, C, W	F	S	P, R	DAL,SOA
M55342^05@3#40&	3,400,000	200 (char. E, H) or 225 (char. K, M)	E, H, K, M	B, C, W	F	S	P, R	DAL,SOA
M55342^05@3#48&	3,480,000	200 (char. E, H) or 225 (char. K, M)	E, H, K, M	B, C, W	F	S	P, R	DAL,SOA
M55342^05@3#57&	3,570,000	200 (char. E, H) or 225 (char. K, M)	E, H, K, M	B, C, W	F	S	P, R	DAL,SOA
M55342^05@3#60&	3,600,000	200 (char. E, H) or 225 (char. K, M)	E, H, K, M	B, C, W	T, L	S	P, R	DAL,SOA
M55342^05@3#65&	3,650,000	200 (char. E, H) or 225 (char. K, M)	E, H, K, M	B, C, W	F	S	P, R	DAL,SOA
M55342^05@3#74&	3,740,000	200 (char. E, H) or 225 (char. K, M)	E, H, K, M	B, C, W	F	S	P, R	DAL,SOA
M55342^05@3#83&	3,830,000	200 (char. E, H) or 225 (char. K, M)	E, H, K, M	B, C, W	F	S	P, R	DAL,SOA
M55342^05@3#90&	3,900,000	200 (char. E, H) or 225 (char. K, M)	E, H, K, M	B, C, W	T, L, P	S	P, R	DAL,SOA
M55342^05@3#92&	3,920,000	200 (char. E, H) or 225 (char. K, M)	E, H, K, M	B, C, W	F	S	P, R	DAL,SOA
M55342^05@4#02&	4,020,000	200 (char. E, H) or 225 (char. K, M)	E, H, K, M	B, C, W	F	S	P, R	DAL,SOA
M55342^05@4#12&	4,120,000	200 (char. E, H) or 225 (char. K, M)	E, H, K, M	B, C, W	F	S	P, R	DAL,SOA
M55342^05@4#22&	4,220,000	200 (char. E, H) or 225 (char. K, M)	E, H, K, M	B, C, W	F	S	P, R	DAL,SOA

M55342^05@4#30&	4,300,000	200 (char. E, H) or 225 (char. K, M)	E, H, K, M	B, C, W	T, L	S	P, R	DAL,SOA
M55342^05@4#32&	4,320,000	200 (char. E, H) or 225 (char. K, M)	E, H, K, M	B, C, W	F	S	P, R	DAL,SOA
M55342^05@4#42&	4,420,000	200 (char. E, H) or 225 (char. K, M)	E, H, K, M	B, C, W	F	S	P, R	DAL,SOA
M55342^05@4#53&	4,530,000	200 (char. E, H) or 225 (char. K, M)	E, H, K, M	B, C, W	F	S	P, R	DAL,SOA
M55342^05@4#64&	4,640,000	200 (char. E, H) or 225 (char. K, M)	E, H, K, M	B, C, W	F	S	P, R	DAL,SOA
M55342^05@4#70&	4,700,000	200 (char. E, H) or 225 (char. K, M)	E, H, K, M	B, C, W	T, L, P	S	P, R	DAL,SOA
M55342^05@4#75&	4,750,000	200 (char. E, H) or 225 (char. K, M)	E, H, K, M	B, C, W	F	S	P, R	DAL,SOA
M55342^05@4#87&	4,870,000	200 (char. E, H) or 225 (char. K, M)	E, H, K, M	B, C, W	F	S	P, R	DAL,SOA
M55342^05@4#99&	4,990,000	200 (char. E, H) or 225 (char. K, M)	E, H, K, M	B, C, W	F	S	P, R	DAL,SOA
M55342^05@5#10&	5,100,000	200 (char. E, H) or 225 (char. K, M)	E, H, K, M	B, C, W	T, L	S	P, R	DAL,SOA
M55342^05@5#11&	5,110,000	200 (char. E, H) or 225 (char. K, M)	E, H, K, M	B, C, W	F	S	P, R	DAL,SOA
M55342^05@5#23&	5,230,000	200 (char. E, H) or 225 (char. K, M)	E, H, K, M	B, C, W	F	S	P, R	DAL,SOA
M55342^05@5#36&	5,360,000	200 (char. E, H) or 225 (char. K, M)	E, H, K, M	B, C, W	F	S	P, R	DAL,SOA
M55342^05@5#49&	5,490,000	200 (char. E, H) or 225 (char. K, M)	E, H, K, M	B, C, W	F	S	P, R	DAL,SOA
M55342^05@5#60&	5,600,000	200 (char. E, H) or 225 (char. K, M)	E, H, K, M	B, C, W	T, L, P	S	P, R	DAL,SOA
M55342^05@5#62&	5,620,000	200 (char. E, H) or 225 (char. K, M)	E, H, K, M	B, C, W	F	S	P, R	DAL,SOA
M55342^05@5#76&	5,760,000	200 (char. E, H) or 225 (char. K, M)	E, H, K, M	B, C, W	F	S	P, R	DAL,SOA
M55342^05@5#90&	5,900,000	200 (char. E, H) or 225 (char. K, M)	E, H, K, M	B, C, W	F	S	P, R	DAL,SOA
M55342^05@6#04&	6,040,000	200 (char. E, H) or 225 (char. K, M)	E, H, K, M	B, C, W	F	S	P, R	DAL,SOA
M55342^05@6#19&	6,190,000	200 (char. E, H) or 225 (char. K, M)	E, H, K, M	B, C, W	F	S	P, R	DAL,SOA
M55342^05@6#20&	6,200,000	200 (char. E, H) or 225 (char. K, M)	E, H, K, M	B, C, W	T, L	S	P, R	DAL,SOA
M55342^05@6#34&	6,340,000	200 (char. E, H) or 225 (char. K, M)	E, H, K, M	B, C, W	F	S	P, R	DAL,SOA
M55342^05@6#49&	6,490,000	200 (char. E, H) or 225 (char. K, M)	E, H, K, M	B, C, W	F	S	P, R	DAL,SOA
M55342^05@6#65&	6,650,000	200 (char. E, H) or 225 (char. K, M)	E, H, K, M	B, C, W	F	S	P, R	DAL,SOA
M55342^05@6#80&	6,800,000	200 (char. E, H) or 225 (char. K, M)	E, H, K, M	B, C, W	T, L, P	S	P, R	DAL,SOA
M55342^05@6#81&	6,810,000	200 (char. E, H) or 225 (char. K, M)	E, H, K, M	B, C, W	F	S	P, R	DAL,SOA
M55342^05@6#98&	6,980,000	200 (char. E, H) or 225 (char. K, M)	E, H, K, M	B, C, W	F	S	P, R	DAL,SOA
M55342^05@7#15&	7,150,000	200 (char. E, H) or 225 (char. K, M)	E, H, K, M	B, C, W	F	S	P, R	DAL,SOA
M55342^05@7#32&	7,320,000	200 (char. E, H) or 225 (char. K, M)	E, H, K, M	B, C, W	F	S	P, R	DAL,SOA
M55342^05@7#50&	7,500,000	200 (char. E, H) or 225 (char. K, M)	E, H, K, M	B, C, W	F, T, L	S	P, R	DAL,SOA
M55342^05@7#68&	7,680,000	200 (char. E, H) or 225 (char. K, M)	E, H, K, M	B, C, W	F	S	P, R	DAL,SOA
M55342^05@7#87&	7,870,000	200 (char. E, H) or 225 (char. K, M)	E, H, K, M	B, C, W	F	S	P, R	DAL,SOA
M55342^05@8#06&	8,060,000	200 (char. E, H) or 225 (char. K, M)	E, H, K, M	B, C, W	F	S	P, R	DAL,SOA
M55342^05@8#20&	8,200,000	200 (char. E, H) or 225 (char. K, M)	E, H, K, M	B, C, W	T, L, P	S	P, R	DAL,SOA
M55342^05@8#25&	8,250,000	200 (char. E, H) or 225 (char. K, M)	E, H, K, M	B, C, W	F	S	P, R	DAL,SOA
M55342^05@8#45&	8,450,000	200 (char. E, H) or 225 (char. K, M)	E, H, K, M	B, C, W	F	S	P, R	DAL,SOA
M55342^05@8#66&	8,660,000	200 (char. E, H) or 225 (char. K, M)	E, H, K, M	B, C, W	F	S	P, R	DAL,SOA
M55342^05@8#87&	8,870,000	200 (char. E, H) or 225 (char. K, M)	E, H, K, M	B, C, W	F	S	P, R	DAL,SOA
M55342^05@9#09&	9,090,000	200 (char. E, H) or 225 (char. K, M)	E, H, K, M	B, C, W	F	S	P, R	DAL,SOA
M55342^05@9#10&	9,100,000	200 (char. E, H) or 225 (char. K, M)	E, H, K, M	B, C, W	T, L	S	P, R	DAL,SOA
M55342^05@9#31&	9,310,000	200 (char. E, H) or 225 (char. K, M)	E, H, K, M	B, C, W	F	S	P, R	DAL,SOA
M55342^05@9#53&	9,530,000	200 (char. E, H) or 225 (char. K, M)	E, H, K, M	B, C, W	F	S	P, R	DAL,SOA
M55342^05@9#76&	9,760,000	200 (char. E, H) or 225 (char. K, M)	E, H, K, M	B, C, W	F	S	P, R	DAL,SOA
M55342^05@10#0&	10,000,000	200 (char. E, H) or 225 (char. K, M)	E, H, K, M	B, C, W	T, L, P	S	P, R	DAL,SOA
M55342^05@10#2&	10,200,000	200 (char. E, H) or 225 (char. K, M)	E, H, K, M	B, C, W	F	S	P, R	DAL,SOA
M55342^05@10#5&	10,500,000	200 (char. E, H) or 225 (char. K, M)	E, H, K, M	B, C, W	F	S	P, R	DAL,SOA
M55342^05@10#7&	10,700,000	200 (char. E, H) or 225 (char. K, M)	E, H, K, M	B, C, W	F	S	P, R	DAL,SOA

M55342^05@11#0&	11,000,000	200 (char. E, H) or 225 (char. K, M)	E, H, K, M	B, C, W	T, L	S	P, R	DAL,SOA
M55342^05@11#3&	11,300,000	200 (char. E, H) or 225 (char. K, M)	E, H, K, M	B, C, W	F	S	P, R	DAL,SOA
M55342^05@11#5&	11,500,000	200 (char. E, H) or 225 (char. K, M)	E, H, K, M	B, C, W	F	S	P, R	DAL,SOA
M55342^05@11#8&	11,800,000	200 (char. E, H) or 225 (char. K, M)	E, H, K, M	B, C, W	F	S	P, R	DAL,SOA
M55342^05@12#0&	12,000,000	200 (char. E, H) or 225 (char. K, M)	E, H, K, M	B, C, W	T, L, P	S	P, R	DAL,SOA
M55342^05@12#1&	12,100,000	200 (char. E, H) or 225 (char. K, M)	E, H, K, M	B, C, W	F	S	P, R	DAL,SOA
M55342^05@12#4&	12,400,000	200 (char. E, H) or 225 (char. K, M)	E, H, K, M	B, C, W	F	S	P, R	DAL,SOA
M55342^05@12#7&	12,700,000	200 (char. E, H) or 225 (char. K, M)	E, H, K, M	B, C, W	F	S	P, R	DAL,SOA
M55342^05@13#0&	13,000,000	200 (char. E, H) or 225 (char. K, M)	E, H, K, M	B, C, W	T, L	S	P, R	DAL,SOA
M55342^05@13#3&	13,300,000	200 (char. E, H) or 225 (char. K, M)	E, H, K, M	B, C, W	F	S	P, R	DAL,SOA
M55342^05@13#7&	13,700,000	200 (char. E, H) or 225 (char. K, M)	E, H, K, M	B, C, W	F	S	P, R	DAL,SOA
M55342^05@14#0&	14,000,000	200 (char. E, H) or 225 (char. K, M)	E, H, K, M	B, C, W	F	S	P, R	DAL,SOA
M55342^05@14#3&	14,300,000	200 (char. E, H) or 225 (char. K, M)	E, H, K, M	B, C, W	F	S	P, R	DAL,SOA
M55342^05@14#7&	14,700,000	200 (char. E, H) or 225 (char. K, M)	E, H, K, M	B, C, W	F	S	P, R	DAL,SOA
M55342^05@15#0&	15,000,000	200 (char. E, H) or 225 (char. K, M)	E, H, K, M	B, C, W	T, L, P	S	P, R	DAL,SOA

RM2208 RESISTORS

DECADE BREAKDOWN

Click on the link below to see the associated parts selection listing:

Resistance Range
5.60 Ohms through 9.76 Ohms
10.0 Ohms through 97.6 Ohms
100 Ohms through 976 Ohms
1,000 Ohms through 9,760 Ohms
10,000 Ohms through 97,600 Ohms
100,000 Ohms through 976,000 Ohms
1,000,000 Ohms through 9,760,000 Ohms
10,000,000 Ohms through 15,000,000 Ohms

MIL-PRF-55342/5 (RM2208) Film Chip Resistors: 5.60 Ohms Through 9.76 Ohms

	Resistance	Power	Char.	Term.	Resistance Tol./	Level 1	Level 2	
Part Number	Value (Ohms)	Rating (mW)	(^)	Type (@)	Multiplier (#)	FRL (&)	FRL (&)	Manufacturer
M55342^05@5#60&	5.60	200 (char. E, H) or 225 (char. K, M)	E, H, K, M	B, C, W	G, J, M	S, T	P, R	DAL,MSI,SOA
M55342^05@5#62&	5.62	200 (char. E, H) or 225 (char. K, M)	E, H, K, M	B, C, W	D	S, T	P, R	DAL,MSI,SOA
M55342^05@5#76&	5.76	200 (char. E, H) or 225 (char. K, M)	E, H, K, M	B, C, W	D	S, T	P, R	DAL,MSI,SOA
M55342^05@5#90&	5.90	200 (char. E, H) or 225 (char. K, M)	E, H, K, M	B, C, W	D	S, T	P, R	DAL,MSI,SOA
M55342^05@6#04&	6.04	200 (char. E, H) or 225 (char. K, M)	E, H, K, M	B, C, W	D	S, T	P, R	DAL,MSI,SOA
M55342^05@6#19&	6.19	200 (char. E, H) or 225 (char. K, M)	E, H, K, M	B, C, W	D	S, T	P, R	DAL,MSI,SOA
M55342^05@6#20&	6.20	200 (char. E, H) or 225 (char. K, M)	E, H, K, M	B, C, W	G, J	S, T	P, R	DAL,MSI,SOA
M55342^05@6#34&	6.34	200 (char. E, H) or 225 (char. K, M)	E, H, K, M	B, C, W	D	S, T	P, R	DAL,MSI,SOA
M55342^05@6#49&	6.49	200 (char. E, H) or 225 (char. K, M)	E, H, K, M	B, C, W	D	S, T	P, R	DAL,MSI,SOA

	Resistance	Power	Char.	Term.	Resistance Tol./	Level 1	Level 2	
Part Number	Value (Ohms)	Rating (mW)	(^)	Type (@)	Multiplier (#)	FRL (&)	FRL (&)	Manufacturer
M55342^05@6#65&	6.65	200 (char. E, H) or 225 (char. K, M)	E, H, K, M	B, C, W	D	S, T	P, R	DAL,MSI,SOA
M55342^05@6#80&	6.80	200 (char. E, H) or 225 (char. K, M)	E, H, K, M	B, C, W	G, J, M	S, T	P, R	DAL,MSI,SOA
M55342^05@6#81&	6.81	200 (char. E, H) or 225 (char. K, M)	E, H, K, M	B, C, W	D	S, T	P, R	DAL,MSI,SOA
M55342^05@6#98&	6.98	200 (char. E, H) or 225 (char. K, M)	E, H, K, M	B, C, W	D	S, T	P, R	DAL,MSI,SOA
M55342^05@7#15&	7.15	200 (char. E, H) or 225 (char. K, M)	E, H, K, M	B, C, W	D	S, T	P, R	DAL,MSI,SOA
M55342^05@7#32&	7.32	200 (char. E, H) or 225 (char. K, M)	E, H, K, M	B, C, W	D	S, T	P, R	DAL,MSI,SOA
M55342^05@7#50&	7.50	200 (char. E, H) or 225 (char. K, M)	E, H, K, M	B, C, W	D, G, J	S, T	P, R	DAL,MSI,SOA
M55342^05@7#68&	7.68	200 (char. E, H) or 225 (char. K, M)	E, H, K, M	B, C, W	D	S, T	P, R	DAL,MSI,SOA
M55342^05@7#87&	7.87	200 (char. E, H) or 225 (char. K, M)	E, H, K, M	B, C, W	D	S, T	P, R	DAL,MSI,SOA
	Resistance	Power	Char.	Term.	Resistance Tol./	Level 1	Level 2	
Part Number	Value (Ohms)	Rating (mW)	(^)	Type (@)	Multiplier (#)	FRL (&)	FRL (&)	Manufacturer
M55342^05@8#06&	8.06	200 (char. E, H) or 225 (char. K, M)	E, H, K, M	B, C, W	D	S, T	P, R	DAL,MSI,SOA
M55342^05@8#20&	8.20	200 (char. E, H) or 225 (char. K, M)	E, H, K, M	B, C, W	G, J, M	S, T	P, R	DAL,MSI,SOA
M55342^05@8#25&	8.25	200 (char. E, H) or 225 (char. K, M)	E, H, K, M	B, C, W	D	S, T	P, R	DAL,MSI,SOA
M55342^05@8#45&	8.45	200 (char. E, H) or 225 (char. K, M)	E, H, K, M	B, C, W	D	S, T	P, R	DAL,MSI,SOA
M55342^05@8#66&	8.66	200 (char. E, H) or 225 (char. K, M)	E, H, K, M	B, C, W	D	S, T	P, R	DAL,MSI,SOA
M55342^05@8#87&	8.87	200 (char. E, H) or 225 (char. K, M)	E, H, K, M	B, C, W	D	S, T	P, R	DAL,MSI,SOA
M55342^05@9#09&	9.09	200 (char. E, H) or 225 (char. K, M)	E, H, K, M	B, C, W	D	S, T	P, R	DAL,MSI,SOA
M55342^05@9#10&	9.10	200 (char. E, H) or 225 (char. K, M)	E, H, K, M	B, C, W	G, J	S, T	P, R	DAL,MSI,SOA
M55342^05@9#31&	9.31	200 (char. E, H) or 225 (char. K, M)	E, H, K, M	B, C, W	D	S, T	P, R	DAL,MSI,SOA
M55342^05@9#53&	9.53	200 (char. E, H) or 225 (char. K, M)	E, H, K, M	B, C, W	D	S, T	P, R	DAL,MSI,SOA
M55342^05@9#76&	9.76	200 (char. E, H) or 225 (char. K, M)	E, H, K, M	B, C, W	D	S, T	P, R	DAL,MSI,SOA
	Resistance	Power	Char.	Term.	Resistance Tol./	Level 1	Level 2	
Part Number	Value (Ohms)	Rating (mW)	(^)	Type (@)	Multiplier (#)	FRL (&)	FRL (&)	Manufacturer

MIL-PRF-55342/5 (RM2208) Film Chip Resistors: 10.0 Ohms Through 97.6 Ohms

	Resistance	Power	Char.	Term.	Resistance Tol./	Level 1	Level 2	
Part Number	Value (Ohms)	Rating (mW)	(^)	Type (@)	Multiplier (#)	FRL (&)	FRL (&)	Manufacturer
M55342^05@10#0&	10.0	200 (char. E, H) or 225 (char. K, M)	E, H, K, M	B, C, W	D, G, J, M	S, T	P, R	DAL,MSI,SOA
M55342^05@10#2&	10.2	200 (char. E, H) or 225 (char. K, M)	E, H, K, M	B, C, W	D	S, T	P, R	DAL,MSI,SOA
M55342^05@10#5&	10.5	200 (char. E, H) or 225 (char. K, M)	E, H, K, M	B, C, W	D	S, T	P, R	DAL,MSI,SOA
M55342^05@10#7&	10.7	200 (char. E, H) or 225 (char. K, M)	E, H, K, M	B, C, W	D	S, T	P, R	DAL,MSI,SOA
M55342^05@11#0&	11.0	200 (char. E, H) or 225 (char. K, M)	E, H, K, M	B, C, W	D, G, J	S, T	P, R	DAL,MSI,SOA
M55342^05@11#3&	11.3	200 (char. E, H) or 225 (char. K, M)	E, H, K, M	B, C, W	D	S, T	P, R	DAL,MSI,SOA
M55342^05@11#5&	11.5	200 (char. E, H) or 225 (char. K, M)	E, H, K, M	B, C, W	D	S, T	P, R	DAL,MSI,SOA
M55342^05@11#8&	11.8	200 (char. E, H) or 225 (char. K, M)	E, H, K, M	B, C, W	D	S, T	P, R	DAL,MSI,SOA
M55342^05@12#0&	12.0	200 (char. E, H) or 225 (char. K, M)	E, H, K, M	B, C, W	G, J, M	S, T	P, R	DAL,MSI,SOA
M55342^05@12#1&	12.1	200 (char. E, H) or 225 (char. K, M)	E, H, K, M	B, C, W	D	S, T	P, R	DAL,MSI,SOA
	Resistance	Power	Char.	Term.	Resistance Tol./	Level 1	Level 2	
Part Number	Value (Ohms)	Rating (mW)	(^)	Type (@)	Multiplier (#)	FRL (&)	FRL (&)	Manufacturer
M55342^05@12#4&	12.4	200 (char. E, H) or 225 (char. K, M)	E, H, K, M	B, C, W	D	S, T	P, R	DAL,MSI,SOA
M55342^05@12#7&	12.7	200 (char. E, H) or 225 (char. K, M)	E, H, K, M	B, C, W	D	S, T	P, R	DAL,MSI,SOA

M55342^05@13#0&	13.0	200 (char. E, H) or 225 (char. K, M)	E, H, K, M	B, C, W	D, G, J	S, T	P, R	DAL,MSI,SOA
M55342^05@13#3&	13.3	200 (char. E, H) or 225 (char. K, M)	E, H, K, M	B, C, W	D	S, T	P, R	DAL,MSI,SOA
M55342^05@13#7&	13.7	200 (char. E, H) or 225 (char. K, M)	E, H, K, M	B, C, W	D	S, T	P, R	DAL,MSI,SOA
M55342^05@14#0&	14.0	200 (char. E, H) or 225 (char. K, M)	E, H, K, M	B, C, W	D	S, T	P, R	DAL,MSI,SOA
M55342^05@14#3&	14.3	200 (char. E, H) or 225 (char. K, M)	E, H, K, M	B, C, W	D	S, T	P, R	DAL,MSI,SOA
M55342^05@14#7&	14.7	200 (char. E, H) or 225 (char. K, M)	E, H, K, M	B, C, W	D	S, T	P, R	DAL,MSI,SOA
M55342^05@15#0&	15.0	200 (char. E, H) or 225 (char. K, M)	E, H, K, M	B, C, W	D, G, J, M	S, T	P, R	DAL,MSI,SOA
	Resistance	Power	Char.	Term.	Resistance Tol./	Level 1	Level 2	
Part Number	Value (Ohms)	Rating (mW)	(^)	Type (@)	Multiplier (#)	FRL (&)	FRL (&)	Manufacturer
M55342^05@15#4&	15.4	200 (char. E, H) or 225 (char. K, M)	E, H, K, M	B, C, W	D	S, T	P, R	DAL,MSI,SOA
M55342^05@15#8&	15.8	200 (char. E, H) or 225 (char. K, M)	E, H, K, M	B, C, W	D	S, T	P, R	DAL,MSI,SOA
M55342^05@16#0&	16.0	200 (char. E, H) or 225 (char. K, M)	E, H, K, M	B, C, W	G, J	S, T	P, R	DAL,MSI,SOA
M55342^05@16#2&	16.2	200 (char. E, H) or 225 (char. K, M)	E, H, K, M	B, C, W	D	S, T	P, R	DAL,MSI,SOA
M55342^05@16#5&	16.5	200 (char. E, H) or 225 (char. K, M)	E, H, K, M	B, C, W	D	S, T	P, R	DAL,MSI,SOA
M55342^05@16#9&	16.9	200 (char. E, H) or 225 (char. K, M)	E, H, K, M	B, C, W	D	S, T	P, R	DAL,MSI,SOA
M55342^05@17#4&	17.4	200 (char. E, H) or 225 (char. K, M)	E, H, K, M	B, C, W	D	S, T	P, R	DAL,MSI,SOA
M55342^05@17#8&	17.8	200 (char. E, H) or 225 (char. K, M)	E, H, K, M	B, C, W	D	S, T	P, R	DAL,MSI,SOA
M55342^05@18#0&	18.0	200 (char. E, H) or 225 (char. K, M)	E, H, K, M	B, C, W	G, J, M	S, T	P, R	DAL,MSI,SOA
	Resistance	Power	Char.	Term.	Resistance Tol./	Level 1	Level 2	
Part Number	Value (Ohms)	Rating (mW)	(^)	Type (@)	Multiplier (#)	FRL (&)	FRL (&)	Manufacturer
M55342^05@18#2&	18.2	200 (char. E, H) or 225 (char. K, M)	E, H, K, M	B, C, W	D	S, T	P, R	DAL,MSI,SOA
M55342^05@18#7&	18.7	200 (char. E, H) or 225 (char. K, M)	E, H, K, M	B, C, W	D	S, T	P, R	DAL,MSI,SOA
M55342^05@19#1&	19.1	200 (char. E, H) or 225 (char. K, M)	E, H, K, M	B, C, W	D	S, T	P, R	DAL,MSI,SOA
M55342^05@19#6&	19.6	200 (char. E, H) or 225 (char. K, M)	E, H, K, M	B, C, W	D	S, T	P, R	DAL,MSI,SOA
M55342^05@20#0&	20.0	200 (char. E, H) or 225 (char. K, M)	E, H, K, M	B, C, W	D, G, J, M	S, T	P, R	DAL,MSI,SOA
M55342^05@20#5&	20.5	200 (char. E, H) or 225 (char. K, M)	E, H, K, M	B, C, W	D	S, T	P, R	DAL,MSI,SOA
M55342^05@21#0&	21.0	200 (char. E, H) or 225 (char. K, M)	E, H, K, M	B, C, W	D	S, T	P, R	DAL,MSI,SOA
M55342^05@21#5&	21.5	200 (char. E, H) or 225 (char. K, M)	E, H, K, M	B, C, W	D	S, T	P, R	DAL,MSI,SOA
M55342^05@22#0&	22.0	200 (char. E, H) or 225 (char. K, M)	E, H, K, M	B, C, W	G, J, M	S, T	P, R	DAL,MSI,SOA
	Resistance	Power	Char.	Term.	Resistance Tol./	Level 1	Level 2	
Part Number	Value (Ohms)	Rating (mW)	(^)	Type (@)	Multiplier (#)	FRL (&)	FRL (&)	Manufacturer
M55342^05@22#1&	22.1	200 (char. E, H) or 225 (char. K, M)	E, H, K, M	B, C, W	D	S, T	P, R	DAL,MSI,SOA
M55342^05@22#6&	22.6	200 (char. E, H) or 225 (char. K, M)	E, H, K, M	B, C, W	D	S, T	P, R	DAL,MSI,SOA
M55342^05@23#2&	23.2	200 (char. E, H) or 225 (char. K, M)	E, H, K, M	B, C, W	D	S, T	P, R	DAL,MSI,SOA
M55342^05@23#7&	23.7	200 (char. E, H) or 225 (char. K, M)	E, H, K, M	B, C, W	D	S, T	P, R	DAL,MSI,SOA
M55342^05@24#0&	24.0	200 (char. E, H) or 225 (char. K, M)	E, H, K, M	B, C, W	G, J	S, T	P, R	DAL,MSI,SOA
M55342^05@24#3&	24.3	200 (char. E, H) or 225 (char. K, M)	E, H, K, M	B, C, W	D	S, T	P, R	DAL,MSI,SOA
M55342^05@24#9&	24.9	200 (char. E, H) or 225 (char. K, M)	E, H, K, M	B, C, W	D	S, T	P, R	DAL,MSI,SOA
M55342^05@25#5&	25.5	200 (char. E, H) or 225 (char. K, M)	E, H, K, M	B, C, W	D	S, T	P, R	DAL,MSI,SOA
M55342^05@26#1&	26.1	200 (char. E, H) or 225 (char. K, M)	E, H, K, M	B, C, W	D	S, T	P, R	DAL,MSI,SOA
	Resistance	Power	Char.	Term.	Resistance Tol./	Level 1	Level 2	
Part Number	Value (Ohms)	Rating (mW)	(^)	Type (@)	Multiplier (#)	FRL (&)	FRL (&)	Manufacturer
M55342^05@26#7&	26.7	200 (char. E, H) or 225 (char. K, M)	E, H, K, M	B, C, W	D	S, T	P, R	DAL,MSI,SOA
M55342^05@27#0&	27.0	200 (char. E, H) or 225 (char. K, M)	E, H, K, M	B, C, W	G, J, M	S, T	P, R	DAL,MSI,SOA
M55342^05@27#4&	27.4	200 (char. E, H) or 225 (char. K, M)	E, H, K, M	B, C, W	D	S, T	P, R	DAL,MSI,SOA
M55342^05@28#0&	28.0	200 (char. E, H) or 225 (char. K, M)	E, H, K, M	B, C, W	D	S, T	P, R	DAL,MSI,SOA
M55342^05@28#7&	28.7	200 (char. E, H) or 225 (char. K, M)	E, H, K, M	B, C, W	D	S, T	P, R	DAL,MSI,SOA

M55342^05@29#4&	29.4	200 (char. E, H) or 225 (char. K, M)	E, H, K, M	B, C, W	D	S, T	P, R	DAL,MSI,SOA
M55342^05@30#0&	30.0	200 (char. E, H) or 225 (char. K, M)	E, H, K, M	B, C, W	G, J	S, T	P, R	DAL,MSI,SOA
M55342^05@30#1&	30.1	200 (char. E, H) or 225 (char. K, M)	E, H, K, M	B, C, W	D	S, T	P, R	DAL,MSI,SOA
M55342^05@30#9&	30.9	200 (char. E, H) or 225 (char. K, M)	E, H, K, M	B, C, W	D	S, T	P, R	DAL,MSI,SOA
	Resistance	Power	Char.	Term.	Resistance Tol./	Level 1	Level 2	
Part Number	Value (Ohms)	Rating (mW)	(^)	Type (@)	Multiplier (#)	FRL (&)	FRL (&)	Manufacturer
M55342^05@31#6&	31.6	200 (char. E, H) or 225 (char. K, M)	E, H, K, M	B, C, W	D	S, T	P, R	DAL,MSI,SOA
M55342^05@32#4&	32.4	200 (char. E, H) or 225 (char. K, M)	E, H, K, M	B, C, W	D	S, T	P, R	DAL,MSI,SOA
M55342^05@33#0&	33.0	200 (char. E, H) or 225 (char. K, M)	E, H, K, M	B, C, W	G, J, M	S, T	P, R	DAL,MSI,SOA
M55342^05@33#2&	33.2	200 (char. E, H) or 225 (char. K, M)	E, H, K, M	B, C, W	D	S, T	P, R	DAL,MSI,SOA
M55342^05@34#0&	34.0	200 (char. E, H) or 225 (char. K, M)	E, H, K, M	B, C, W	D	S, T	P, R	DAL,MSI,SOA
M55342^05@34#8&	34.8	200 (char. E, H) or 225 (char. K, M)	E, H, K, M	B, C, W	D	S, T	P, R	DAL,MSI,SOA
M55342^05@35#7&	35.7	200 (char. E, H) or 225 (char. K, M)	E, H, K, M	B, C, W	D	S, T	P, R	DAL,MSI,SOA
M55342^05@36#0&	36.0	200 (char. E, H) or 225 (char. K, M)	E, H, K, M	B, C, W	G, J	S, T	P, R	DAL,MSI,SOA
M55342^05@36#5&	36.5	200 (char. E, H) or 225 (char. K, M)	E, H, K, M	B, C, W	D	S, T	P, R	DAL,MSI,SOA
	Resistance	Power	Char.	Term.	Resistance Tol./	Level 1	Level 2	
Part Number	Value (Ohms)	Rating (mW)	(^)	Type (@)	Multiplier (#)	FRL (&)	FRL (&)	Manufacturer
M55342^05@37#4&	37.4	200 (char. E, H) or 225 (char. K, M)	E, H, K, M	B, C, W	D	S, T	P, R	DAL,MSI,SOA
M55342^05@38#3&	38.3	200 (char. E, H) or 225 (char. K, M)	E, H, K, M	B, C, W	D	S, T	P, R	DAL,MSI,SOA
M55342^05@39#0&	39.0	200 (char. E, H) or 225 (char. K, M)	E, H, K, M	B, C, W	G, J, M	S, T	P, R	DAL,MSI,SOA
M55342^05@39#2&	39.2	200 (char. E, H) or 225 (char. K, M)	E, H, K, M	B, C, W	D	S, T	P, R	DAL,MSI,SOA
M55342^05@40#2&	40.2	200 (char. E, H) or 225 (char. K, M)	E, H, K, M	B, C, W	D	S, T	P, R	DAL,MSI,SOA
M55342^05@41#2&	41.2	200 (char. E, H) or 225 (char. K, M)	E, H, K, M	B, C, W	D	S, T	P, R	DAL,MSI,SOA
M55342^05@42#2&	42.2	200 (char. E, H) or 225 (char. K, M)	E, H, K, M	B, C, W	D	S, T	P, R	DAL,MSI,SOA
M55342^05@43#0&	43.0	200 (char. E, H) or 225 (char. K, M)	E, H, K, M	B, C, W	G, J	S, T	P, R	DAL,MSI,SOA
M55342^05@43#2&	43.2	200 (char. E, H) or 225 (char. K, M)	E, H, K, M	B, C, W	D	S, T	P, R	DAL,MSI,SOA
	Resistance	Power	Char.	Term.	Resistance Tol./	Level 1	Level 2	
Part Number	Value (Ohms)	Rating (mW)	(^)	Type (@)	Multiplier (#)	FRL (&)	FRL (&)	Manufacturer
M55342^05@44#2&	44.2	200 (char. E, H) or 225 (char. K, M)	E, H, K, M	B, C, W	D	S, T	P, R	DAL,MSI,SOA
M55342^05@45#3&	45.3	200 (char. E, H) or 225 (char. K, M)	E, H, K, M	B, C, W	D	S, T	P, R	DAL,MSI,SOA
M55342^05@46#4&	46.4	200 (char. E, H) or 225 (char. K, M)	E, H, K, M	B, C, W	D	S, T	P, R	DAL,MSI,SOA
M55342^05@47#0&	47.0	200 (char. E, H) or 225 (char. K, M)	E, H, K, M	B, C, W	G, J, M	S, T	P, R	DAL,MSI,SOA
M55342^05@47#5&	47.5	200 (char. E, H) or 225 (char. K, M)	E, H, K, M	B, C, W	D	S, T	P, R	DAL,MSI,SOA
M55342^05@48#7&	48.7	200 (char. E, H) or 225 (char. K, M)	E, H, K, M	B, C, W	D	S, T	P, R	DAL,MSI,SOA
M55342^05@49#9&	49.9	200 (char. E, H) or 225 (char. K, M)	E, H, K, M	B, C, W	D	S, T	P, R	DAL,MSI,SOA
M55342^05@51#0&	51.0	200 (char. E, H) or 225 (char. K, M)	E, H, K, M	B, C, W	G, J	S, T	P, R	DAL,MSI,SOA
M55342^05@51#1&	51.1	200 (char. E, H) or 225 (char. K, M)	E, H, K, M	B, C, W	D	S, T	P, R	DAL,MSI,SOA
	Resistance	Power	Char.	Term.	Resistance Tol./	Level 1	Level 2	
Part Number	Value (Ohms)	Rating (mW)	(^)	Type (@)	Multiplier (#)	FRL (&)	FRL (&)	Manufacturer
M55342^05@52#3&	52.3	200 (char. E, H) or 225 (char. K, M)	E, H, K, M	B, C, W	D	S, T	P, R	DAL,MSI,SOA
M55342^05@53#6&	53.6	200 (char. E, H) or 225 (char. K, M)	E, H, K, M	B, C, W	D	S, T	P, R	DAL,MSI,SOA
M55342^05@54#9&	54.9	200 (char. E, H) or 225 (char. K, M)	E, H, K, M	B, C, W	D	S, T	P, R	DAL,MSI,SOA
M55342^05@56#0&	56.0	200 (char. E, H) or 225 (char. K, M)	E, H, K, M	B, C, W	G, J, M	S, T	P, R	DAL,MSI,SOA
M55342^05@56#2&	56.2	200 (char. E, H) or 225 (char. K, M)	E, H, K, M	B, C, W	D	S, T	P, R	DAL,MSI,SOA
M55342^05@57#6&	57.6	200 (char. E, H) or 225 (char. K, M)	E, H, K, M	B, C, W	D	S, T	P, R	DAL,MSI,SOA
M55342^05@59#0&	59.0	200 (char. E, H) or 225 (char. K, M)	E, H, K, M	B, C, W	D	S, T	P, R	DAL,MSI,SOA
M55342^05@60#4&	60.4	200 (char. E, H) or 225 (char. K, M)	E, H, K, M	B, C, W	D	S, T	P, R	DAL,MSI,SOA

M55342^05@61#9&	61.9	200 (char. E, H) or 225 (char. K, M)	E, H, K, M	B, C, W	D	S, T	P, R	DAL,MSI,SOA
	Resistance	Power	Char.	Term.	Resistance Tol./	Level 1	Level 2	
Part Number	Value (Ohms)	Rating (mW)	(^)	Type (@)	Multiplier (#)	FRL (&)	FRL (&)	Manufacturer
M55342^05@62#0&	62.0	200 (char. E, H) or 225 (char. K, M)	E, H, K, M	B, C, W	G, J	S, T	P, R	DAL,MSI,SOA
M55342^05@63#4&	63.4	200 (char. E, H) or 225 (char. K, M)	E, H, K, M	B, C, W	D	S, T	P, R	DAL,MSI,SOA
M55342^05@64#9&	64.9	200 (char. E, H) or 225 (char. K, M)	E, H, K, M	B, C, W	D	S, T	P, R	DAL,MSI,SOA
M55342^05@66#5&	66.5	200 (char. E, H) or 225 (char. K, M)	E, H, K, M	B, C, W	D	S, T	P, R	DAL,MSI,SOA
M55342^05@68#0&	68.0	200 (char. E, H) or 225 (char. K, M)	E, H, K, M	B, C, W	G, J, M	S, T	P, R	DAL,MSI,SOA
M55342^05@68#1&	68.1	200 (char. E, H) or 225 (char. K, M)	E, H, K, M	B, C, W	D	S, T	P, R	DAL,MSI,SOA
M55342^05@69#8&	69.8	200 (char. E, H) or 225 (char. K, M)	E, H, K, M	B, C, W	D	S, T	P, R	DAL,MSI,SOA
M55342^05@71#5&	71.5	200 (char. E, H) or 225 (char. K, M)	E, H, K, M	B, C, W	D	S, T	P, R	DAL,MSI,SOA
M55342^05@73#2&	73.2	200 (char. E, H) or 225 (char. K, M)	E, H, K, M	B, C, W	D	S, T	P, R	DAL,MSI,SOA
	Resistance	Power	Char.	Term.	Resistance Tol./	Level 1	Level 2	
Part Number	Value (Ohms)	Rating (mW)	(^)	Type (@)	Multiplier (#)	FRL (&)	FRL (&)	Manufacturer
M55342^05@75#0&	75.0	200 (char. E, H) or 225 (char. K, M)	E, H, K, M	B, C, W	D, G, J	S, T	P, R	DAL,MSI,SOA
M55342^05@76#8&	76.8	200 (char. E, H) or 225 (char. K, M)	E, H, K, M	B, C, W	D	S, T	P, R	DAL,MSI,SOA
M55342^05@78#7&	78.7	200 (char. E, H) or 225 (char. K, M)	E, H, K, M	B, C, W	D	S, T	P, R	DAL,MSI,SOA
M55342^05@80#6&	80.6	200 (char. E, H) or 225 (char. K, M)	E, H, K, M	B, C, W	D	S, T	P, R	DAL,MSI,SOA
M55342^05@82#0&	82.0	200 (char. E, H) or 225 (char. K, M)	E, H, K, M	B, C, W	G, J, M	S, T	P, R	DAL,MSI,SOA
M55342^05@82#5&	82.5	200 (char. E, H) or 225 (char. K, M)	E, H, K, M	B, C, W	D	S, T	P, R	DAL,MSI,SOA
M55342^05@84#5&	84.5	200 (char. E, H) or 225 (char. K, M)	E, H, K, M	B, C, W	D	S, T	P, R	DAL,MSI,SOA
M55342^05@86#6&	86.6	200 (char. E, H) or 225 (char. K, M)	E, H, K, M	B, C, W	D	S, T	P, R	DAL,MSI,SOA
M55342^05@88#7&	88.7	200 (char. E, H) or 225 (char. K, M)	E, H, K, M	B, C, W	D	S, T	P, R	DAL,MSI,SOA
	Resistance	Power	Char.	Term.	Resistance Tol./	Level 1	Level 2	
Part Number	Value (Ohms)	Rating (mW)	(^)	Type (@)	Multiplier (#)	FRL (&)	FRL (&)	Manufacturer
M55342^05@90#9&	90.9	200 (char. E, H) or 225 (char. K, M)	E, H, K, M	B, C, W	D	S, T	P, R	DAL,MSI,SOA
M55342^05@91#0&	91.0	200 (char. E, H) or 225 (char. K, M)	E, H, K, M	B, C, W	G, J	S, T	P, R	DAL,MSI,SOA
M55342^05@93#1&	93.1	200 (char. E, H) or 225 (char. K, M)	E, H, K, M	B, C, W	D	S, T	P, R	DAL,MSI,SOA
M55342^05@95#3&	95.3	200 (char. E, H) or 225 (char. K, M)	E, H, K, M	B, C, W	D	S, T	P, R	DAL,MSI,SOA
M55342^05@97#6&	97.6	200 (char. E, H) or 225 (char. K, M)	E, H, K, M	B, C, W	D	S, T	P, R	DAL,MSI,SOA
	Resistance	Power	Char.	Term.	Resistance Tol./	Level 1	Level 2	
Part Number	Value (Ohms)	Rating (mW)	(^)	Type (@)	Multiplier (#)	FRL (&)	FRL (&)	Manufacturer

MIL-PRF-55342/5 (RM2208) Film Chip Resistors: 100 Ohms Through 976 Ohms

	Resistance	Power	Char.	Term.	Resistance Tol./	Level 1	Level 2	
Part Number	Value (Ohms)	Rating (mW)	(^)	Type (@)	Multiplier (#)	FRL (&)	FRL (&)	Manufacturer
M55342^05@100#&	100	200 (char. E, H) or 225 (char. K, M)	E, H, K, M	B, C, W	D, G, J, M	S, T	P, R	DAL,MSI,SOA
M55342^05@102#&	102	200 (char. E, H) or 225 (char. K, M)	E, H, K, M	B, C, W	D	S, T	P, R	DAL,MSI,SOA
M55342^05@105#&	105	200 (char. E, H) or 225 (char. K, M)	E, H, K, M	B, C, W	D	S, T	P, R	DAL,MSI,SOA
M55342^05@107#&	107	200 (char. E, H) or 225 (char. K, M)	E, H, K, M	B, C, W	D	S, T	P, R	DAL,MSI,SOA
M55342^05@110#&	110	200 (char. E, H) or 225 (char. K, M)	E, H, K, M	B, C, W	D, G, J	S, T	P, R	DAL,MSI,SOA
M55342^05@113#&	113	200 (char. E, H) or 225 (char. K, M)	E, H, K, M	B, C, W	D	S, T	P, R	DAL,MSI,SOA
M55342^05@115#&	115	200 (char. E, H) or 225 (char. K, M)	E, H, K, M	B, C, W	D	S, T	P, R	DAL,MSI,SOA
M55342^05@118#&	118	200 (char. E, H) or 225 (char. K, M)	E, H, K, M	B, C, W	D	S, T	P, R	DAL,MSI,SOA

M55342^05@120#&	120	200 (char. E, H) or 225 (char. K, M)	E, H, K, M	B, C, W	G, J, M	S, T	P, R	DAL,MSI,SOA
	Resistance	Power	Char.	Term.	Resistance Tol./	Level 1	Level 2	
Part Number	Value (Ohms)	Rating (mW)	(^)	Type (@)	Multiplier (#)	FRL (&)	FRL (&)	Manufacturer
M55342^05@121#&	121	200 (char. E, H) or 225 (char. K, M)	E, H, K, M	B, C, W	D	S, T	P, R	DAL,MSI,SOA
M55342^05@124#&	124	200 (char. E, H) or 225 (char. K, M)	E, H, K, M	B, C, W	D	S, T	P, R	DAL,MSI,SOA
M55342^05@127#&	127	200 (char. E, H) or 225 (char. K, M)	E, H, K, M	B, C, W	D	S, T	P, R	DAL,MSI,SOA
M55342^05@130#&	130	200 (char. E, H) or 225 (char. K, M)	E, H, K, M	B, C, W	D, G, J	S, T	P, R	DAL,MSI,SOA
M55342^05@133#&	133	200 (char. E, H) or 225 (char. K, M)	E, H, K, M	B, C, W	D	S, T	P, R	DAL,MSI,SOA
M55342^05@137#&	137	200 (char. E, H) or 225 (char. K, M)	E, H, K, M	B, C, W	D	S, T	P, R	DAL,MSI,SOA
M55342^05@140#&	140	200 (char. E, H) or 225 (char. K, M)	E, H, K, M	B, C, W	D	S, T	P, R	DAL,MSI,SOA
M55342^05@143#&	143	200 (char. E, H) or 225 (char. K, M)	E, H, K, M	B, C, W	D	S, T	P, R	DAL,MSI,SOA
M55342^05@147#&	147	200 (char. E, H) or 225 (char. K, M)	E, H, K, M	B, C, W	D	S, T	P, R	DAL,MSI,SOA
	Resistance	Power	Char.	Term.	Resistance Tol./	Level 1	Level 2	
Part Number	Value (Ohms)	Rating (mW)	(^)	Type (@)	Multiplier (#)	FRL (&)	FRL (&)	Manufacturer
M55342^05@150#&	150	200 (char. E, H) or 225 (char. K, M)	E, H, K, M	B, C, W	D, G, J, M	S, T	P, R	DAL,MSI,SOA
M55342^05@154#&	154	200 (char. E, H) or 225 (char. K, M)	E, H, K, M	B, C, W	D	S, T	P, R	DAL,MSI,SOA
M55342^05@158#&	158	200 (char. E, H) or 225 (char. K, M)	E, H, K, M	B, C, W	D	S, T	P, R	DAL,MSI,SOA
M55342^05@160#&	160	200 (char. E, H) or 225 (char. K, M)	E, H, K, M	B, C, W	G, J	S, T	P, R	DAL,MSI,SOA
M55342^05@162#&	162	200 (char. E, H) or 225 (char. K, M)	E, H, K, M	B, C, W	D	S, T	P, R	DAL,MSI,SOA
M55342^05@165#&	165	200 (char. E, H) or 225 (char. K, M)	E, H, K, M	B, C, W	D	S, T	P, R	DAL,MSI,SOA
M55342^05@169#&	169	200 (char. E, H) or 225 (char. K, M)	E, H, K, M	B, C, W	D	S, T	P, R	DAL,MSI,SOA
M55342^05@174#&	174	200 (char. E, H) or 225 (char. K, M)	E, H, K, M	B, C, W	D	S, T	P, R	DAL,MSI,SOA
M55342^05@178#&	178	200 (char. E, H) or 225 (char. K, M)	E, H, K, M	B, C, W	D	S, T	P, R	DAL,MSI,SOA
	Resistance	Power	Char.	Term.	Resistance Tol./	Level 1	Level 2	
Part Number	Value (Ohms)	Rating (mW)	(^)	Type (@)	Multiplier (#)	FRL (&)	FRL (&)	Manufacturer
M55342^05@180#&	180	200 (char. E, H) or 225 (char. K, M)	E, H, K, M	B, C, W	G, J, M	S, T	P, R	DAL,MSI,SOA
M55342^05@182#&	182	200 (char. E, H) or 225 (char. K, M)	E, H, K, M	B, C, W	D	S, T	P, R	DAL,MSI,SOA
M55342^05@187#&	187	200 (char. E, H) or 225 (char. K, M)	E, H, K, M	B, C, W	D	S, T	P, R	DAL,MSI,SOA
M55342^05@191#&	191	200 (char. E, H) or 225 (char. K, M)	E, H, K, M	B, C, W	D	S, T	P, R	DAL,MSI,SOA
M55342^05@196#&	196	200 (char. E, H) or 225 (char. K, M)	E, H, K, M	B, C, W	D	S, T	P, R	DAL,MSI,SOA
M55342^05@200#&	200	200 (char. E, H) or 225 (char. K, M)	E, H, K, M	B, C, W	D, G, J, M	S, T	P, R	DAL,MSI,SOA
M55342^05@205#&	205	200 (char. E, H) or 225 (char. K, M)	E, H, K, M	B, C, W	D	S, T	P, R	DAL,MSI,SOA
M55342^05@210#&	210	200 (char. E, H) or 225 (char. K, M)	E, H, K, M	B, C, W	D	S, T	P, R	DAL,MSI,SOA
M55342^05@215#&	215	200 (char. E, H) or 225 (char. K, M)	E, H, K, M	B, C, W	D	S, T	P, R	DAL,MSI,SOA
	Resistance	Power	Char.	Term.	Resistance Tol./	Level 1	Level 2	
Part Number	Value (Ohms)	Rating (mW)	(^)	Type (@)	Multiplier (#)	FRL (&)	FRL (&)	Manufacturer
M55342^05@220#&	220	200 (char. E, H) or 225 (char. K, M)	E, H, K, M	B, C, W	G, J, M	S, T	P, R	DAL,MSI,SOA
M55342^05@221#&	221	200 (char. E, H) or 225 (char. K, M)	E, H, K, M	B, C, W	D	S, T	P, R	DAL,MSI,SOA
M55342^05@226#&	226	200 (char. E, H) or 225 (char. K, M)	E, H, K, M	B, C, W	D	S, T	P, R	DAL,MSI,SOA
M55342^05@232#&	232	200 (char. E, H) or 225 (char. K, M)	E, H, K, M	B, C, W	D	S, T	P, R	DAL,MSI,SOA
M55342^05@237#&	237	200 (char. E, H) or 225 (char. K, M)	E, H, K, M	B, C, W	D	S, T	P, R	DAL,MSI,SOA
M55342^05@240#&	240	200 (char. E, H) or 225 (char. K, M)	E, H, K, M	B, C, W	G, J	S, T	P, R	DAL,MSI,SOA
M55342^05@243#&	243	200 (char. E, H) or 225 (char. K, M)	E, H, K, M	B, C, W	D	S, T	P, R	DAL,MSI,SOA
M55342^05@249#&	249	200 (char. E, H) or 225 (char. K, M)	E, H, K, M	B, C, W	D	S, T	P, R	DAL,MSI,SOA
M55342^05@255#&	255	200 (char. E, H) or 225 (char. K, M)	E, H, K, M	B, C, W	D	S, T	P, R	DAL,MSI,SOA
	Resistance	Power	Char.	Term.	Resistance Tol./	Level 1	Level 2	
Part Number	Value (Ohms)	Rating (mW)	(^)	Type (@)	Multiplier (#)	FRL (&)	FRL (&)	Manufacturer

M55342^05@261#&	261	200 (char. E, H) or 225 (char. K, M)	E, H, K, M	B, C, W	D	S, T	P, R	DAL,MSI,SOA
M55342^05@267#&	267	200 (char. E, H) or 225 (char. K, M)	E, H, K, M	B, C, W	D	S, T	P, R	DAL,MSI,SOA
M55342^05@270#&	270	200 (char. E, H) or 225 (char. K, M)	E, H, K, M	B, C, W	G, J, M	S, T	P, R	DAL,MSI,SOA
M55342^05@274#&	274	200 (char. E, H) or 225 (char. K, M)	E, H, K, M	B, C, W	D	S, T	P, R	DAL,MSI,SOA
M55342^05@280#&	280	200 (char. E, H) or 225 (char. K, M)	E, H, K, M	B, C, W	D	S, T	P, R	DAL,MSI,SOA
M55342^05@287#&	287	200 (char. E, H) or 225 (char. K, M)	E, H, K, M	B, C, W	D	S, T	P, R	DAL,MSI,SOA
M55342^05@294#&	294	200 (char. E, H) or 225 (char. K, M)	E, H, K, M	B, C, W	D	S, T	P, R	DAL,MSI,SOA
M55342^05@300#&	300	200 (char. E, H) or 225 (char. K, M)	E, H, K, M	B, C, W	G, J	S, T	P, R	DAL,MSI,SOA
M55342^05@301#&	301	200 (char. E, H) or 225 (char. K, M)	E, H, K, M	B, C, W	D	S, T	P, R	DAL,MSI,SOA
	Resistance	Power	Char.	Term.	Resistance Tol./	Level 1	Level 2	
Part Number	Value (Ohms)	Rating (mW)	(^)	Type (@)	Multiplier (#)	FRL (&)	FRL (&)	Manufacturer
M55342^05@309#&	309	200 (char. E, H) or 225 (char. K, M)	E, H, K, M	B, C, W	D	S, T	P, R	DAL,MSI,SOA
M55342^05@316#&	316	200 (char. E, H) or 225 (char. K, M)	E, H, K, M	B, C, W	D	S, T	P, R	DAL,MSI,SOA
M55342^05@324#&	324	200 (char. E, H) or 225 (char. K, M)	E, H, K, M	B, C, W	D	S, T	P, R	DAL,MSI,SOA
M55342^05@330#&	330	200 (char. E, H) or 225 (char. K, M)	E, H, K, M	B, C, W	G, J, M	S, T	P, R	DAL,MSI,SOA
M55342^05@332#&	332	200 (char. E, H) or 225 (char. K, M)	E, H, K, M	B, C, W	D	S, T	P, R	DAL,MSI,SOA
M55342^05@340#&	340	200 (char. E, H) or 225 (char. K, M)	E, H, K, M	B, C, W	D	S, T	P, R	DAL,MSI,SOA
M55342^05@348#&	348	200 (char. E, H) or 225 (char. K, M)	E, H, K, M	B, C, W	D	S, T	P, R	DAL,MSI,SOA
M55342^05@357#&	357	200 (char. E, H) or 225 (char. K, M)	E, H, K, M	B, C, W	D	S, T	P, R	DAL,MSI,SOA
M55342^05@360#&	360	200 (char. E, H) or 225 (char. K, M)	E, H, K, M	B, C, W	G, J	S, T	P, R	DAL,MSI,SOA
	Resistance	Power	Char.	Term.	Resistance Tol./	Level 1	Level 2	
Part Number	Value (Ohms)	Rating (mW)	(^)	Type (@)	Multiplier (#)	FRL (&)	FRL (&)	Manufacturer
M55342^05@365#&	365	200 (char. E, H) or 225 (char. K, M)	E, H, K, M	B, C, W	D	S, T	P, R	DAL,MSI,SOA
M55342^05@374#&	374	200 (char. E, H) or 225 (char. K, M)	E, H, K, M	B, C, W	D	S, T	P, R	DAL,MSI,SOA
M55342^05@383#&	383	200 (char. E, H) or 225 (char. K, M)	E, H, K, M	B, C, W	D	S, T	P, R	DAL,MSI,SOA
M55342^05@390#&	390	200 (char. E, H) or 225 (char. K, M)	E, H, K, M	B, C, W	G, J, M	S, T	P, R	DAL,MSI,SOA
M55342^05@392#&	392	200 (char. E, H) or 225 (char. K, M)	E, H, K, M	B, C, W	D	S, T	P, R	DAL,MSI,SOA
M55342^05@402#&	402	200 (char. E, H) or 225 (char. K, M)	E, H, K, M	B, C, W	D	S, T	P, R	DAL,MSI,SOA
M55342^05@412#&	412	200 (char. E, H) or 225 (char. K, M)	E, H, K, M	B, C, W	D	S, T	P, R	DAL,MSI,SOA
M55342^05@422#&	422	200 (char. E, H) or 225 (char. K, M)	E, H, K, M	B, C, W	D	S, T	P, R	DAL,MSI,SOA
M55342^05@430#&	430	200 (char. E, H) or 225 (char. K, M)	E, H, K, M	B, C, W	G, J	S, T	P, R	DAL,MSI,SOA
	Resistance	Power	Char.	Term.	Resistance Tol./	Level 1	Level 2	
Part Number	Value (Ohms)	Rating (mW)	(^)	Type (@)	Multiplier (#)	FRL (&)	FRL (&)	Manufacturer
M55342^05@432#&	432	200 (char. E, H) or 225 (char. K, M)	E, H, K, M	B, C, W	D	S, T	P, R	DAL,MSI,SOA
M55342^05@442#&	442	200 (char. E, H) or 225 (char. K, M)	E, H, K, M	B, C, W	D	S, T	P, R	DAL,MSI,SOA
M55342^05@453#&	453	200 (char. E, H) or 225 (char. K, M)	E, H, K, M	B, C, W	D	S, T	P, R	DAL,MSI,SOA
M55342^05@464#&	464	200 (char. E, H) or 225 (char. K, M)	E, H, K, M	B, C, W	D	S, T	P, R	DAL,MSI,SOA
M55342^05@470#&	470	200 (char. E, H) or 225 (char. K, M)	E, H, K, M	B, C, W	G, J, M	S, T	P, R	DAL,MSI,SOA
M55342^05@475#&	475	200 (char. E, H) or 225 (char. K, M)	E, H, K, M	B, C, W	D	S, T	P, R	DAL,MSI,SOA
M55342^05@487#&	487	200 (char. E, H) or 225 (char. K, M)	E, H, K, M	B, C, W	D	S, T	P, R	DAL,MSI,SOA
M55342^05@499#&	499	200 (char. E, H) or 225 (char. K, M)	E, H, K, M	B, C, W	D	S, T	P, R	DAL,MSI,SOA
M55342^05@510#&	510	200 (char. E, H) or 225 (char. K, M)	E, H, K, M	B, C, W	G, J	S, T	P, R	DAL,MSI,SOA
	Resistance	Power	Char.	Term.	Resistance Tol./	Level 1	Level 2	
Part Number	Value (Ohms)	Rating (mW)	(^)	Type (@)	Multiplier (#)	FRL (&)	FRL (&)	Manufacturer
M55342^05@511#&	511	200 (char. E, H) or 225 (char. K, M)	E, H, K, M	B, C, W	D	S, T	P, R	DAL,MSI,SOA
M55342^05@523#&	523	200 (char. E, H) or 225 (char. K, M)	E, H, K, M	B, C, W	D	S, T	P, R	DAL,MSI,SOA
M55342^05@536#&	536	200 (char. E, H) or 225 (char. K, M)	E, H, K, M	B, C, W	D	S, T	P, R	DAL,MSI,SOA

M55342^05@549#&	549	200 (char. E, H) or 225 (char. K, M)	E, H, K, M	B, C, W	D	S, T	P, R	DAL,MSI,SOA
M55342^05@560#&	560	200 (char. E, H) or 225 (char. K, M)	E, H, K, M	B, C, W	G, J, M	S, T	P, R	DAL,MSI,SOA
M55342^05@562#&	562	200 (char. E, H) or 225 (char. K, M)	E, H, K, M	B, C, W	D	S, T	P, R	DAL,MSI,SOA
M55342^05@576#&	576	200 (char. E, H) or 225 (char. K, M)	E, H, K, M	B, C, W	D	S, T	P, R	DAL,MSI,SOA
M55342^05@590#&	590	200 (char. E, H) or 225 (char. K, M)	E, H, K, M	B, C, W	D	S, T	P, R	DAL,MSI,SOA
M55342^05@604#&	604	200 (char. E, H) or 225 (char. K, M)	E, H, K, M	B, C, W	D	S, T	P, R	DAL,MSI,SOA
	Resistance	Power	Char.	Term.	Resistance Tol./	Level 1	Level 2	
Part Number	Value (Ohms)	Rating (mW)	(^)	Type (@)	Multiplier (#)	FRL (&)	FRL (&)	Manufacturer
M55342^05@619#&	619	200 (char. E, H) or 225 (char. K, M)	E, H, K, M	B, C, W	D	S, T	P, R	DAL,MSI,SOA
M55342^05@620#&	620	200 (char. E, H) or 225 (char. K, M)	E, H, K, M	B, C, W	G, J	S, T	P, R	DAL,MSI,SOA
M55342^05@634#&	634	200 (char. E, H) or 225 (char. K, M)	E, H, K, M	B, C, W	D	S, T	P, R	DAL,MSI,SOA
M55342^05@649#&	649	200 (char. E, H) or 225 (char. K, M)	E, H, K, M	B, C, W	D	S, T	P, R	DAL,MSI,SOA
M55342^05@665#&	665	200 (char. E, H) or 225 (char. K, M)	E, H, K, M	B, C, W	D	S, T	P, R	DAL,MSI,SOA
M55342^05@680#&	680	200 (char. E, H) or 225 (char. K, M)	E, H, K, M	B, C, W	G, J, M	S, T	P, R	DAL,MSI,SOA
M55342^05@681#&	681	200 (char. E, H) or 225 (char. K, M)	E, H, K, M	B, C, W	D	S, T	P, R	DAL,MSI,SOA
M55342^05@698#&	698	200 (char. E, H) or 225 (char. K, M)	E, H, K, M	B, C, W	D	S, T	P, R	DAL,MSI,SOA
M55342^05@715#&	715	200 (char. E, H) or 225 (char. K, M)	E, H, K, M	B, C, W	D	S, T	P, R	DAL,MSI,SOA
	Resistance	Power	Char.	Term.	Resistance Tol./	Level 1	Level 2	
Part Number	Value (Ohms)	Rating (mW)	(^)	Type (@)	Multiplier (#)	FRL (&)	FRL (&)	Manufacturer
M55342^05@732#&	732	200 (char. E, H) or 225 (char. K, M)	E, H, K, M	B, C, W	D	S, T	P, R	DAL,MSI,SOA
M55342^05@750#&	750	200 (char. E, H) or 225 (char. K, M)	E, H, K, M	B, C, W	D, G, J	S, T	P, R	DAL,MSI,SOA
M55342^05@768#&	768	200 (char. E, H) or 225 (char. K, M)	E, H, K, M	B, C, W	D	S, T	P, R	DAL,MSI,SOA
M55342^05@787#&	787	200 (char. E, H) or 225 (char. K, M)	E, H, K, M	B, C, W	D	S, T	P, R	DAL,MSI,SOA
M55342^05@806#&	806	200 (char. E, H) or 225 (char. K, M)	E, H, K, M	B, C, W	D	S, T	P, R	DAL,MSI,SOA
M55342^05@820#&	820	200 (char. E, H) or 225 (char. K, M)	E, H, K, M	B, C, W	G, J, M	S, T	P, R	DAL,MSI,SOA
M55342^05@825#&	825	200 (char. E, H) or 225 (char. K, M)	E, H, K, M	B, C, W	D	S, T	P, R	DAL,MSI,SOA
M55342^05@845#&	845	200 (char. E, H) or 225 (char. K, M)	E, H, K, M	B, C, W	D	S, T	P, R	DAL,MSI,SOA
M55342^05@866#&	866	200 (char. E, H) or 225 (char. K, M)	E, H, K, M	B, C, W	D	S, T	P, R	DAL,MSI,SOA
	Resistance	Power	Char.	Term.	Resistance Tol./	Level 1	Level 2	
Part Number	Value (Ohms)	Rating (mW)	(^)	Type (@)	Multiplier (#)	FRL (&)	FRL (&)	Manufacturer
M55342^05@887#&	887	200 (char. E, H) or 225 (char. K, M)	E, H, K, M	B, C, W	D	S, T	P, R	DAL,MSI,SOA
M55342^05@909#&	909	200 (char. E, H) or 225 (char. K, M)	E, H, K, M	B, C, W	D	S, T	P, R	DAL,MSI,SOA
M55342^05@910#&	910	200 (char. E, H) or 225 (char. K, M)	E, H, K, M	B, C, W	G, J	S, T	P, R	DAL,MSI,SOA
M55342^05@931#&	931	200 (char. E, H) or 225 (char. K, M)	E, H, K, M	B, C, W	D	S, T	P, R	DAL,MSI,SOA
M55342^05@953#&	953	200 (char. E, H) or 225 (char. K, M)	E, H, K, M	B, C, W	D	S, T	P, R	DAL,MSI,SOA
M55342^05@976#&	976	200 (char. E, H) or 225 (char. K, M)	E, H, K, M	B, C, W	D	S, T	P, R	DAL,MSI,SOA
	Resistance	Power	Char.	Term.	Resistance Tol./	Level 1	Level 2	
Part Number	Value (Ohms)	Rating (mW)	(^)	Type (@)	Multiplier (#)	FRL (&)	FRL (&)	Manufacturer

MIL-PRF-55342/5 (RM2208) Film Chip Resistors: 1,000 Ohms Through 9,760 Ohms

	Resistance	Power	Char.	Term.	Resistance Tol./	Level 1	Level 2	
Part Number	Value (Ohms)	Rating (mW)	(^)	Type (@)	Multiplier (#)	FRL (&)	FRL (&)	Manufacturer
M55342^05@1#00&	1,000	200 (char. E, H) or 225 (char. K, M)	E, H, K, M	B, C, W	E, H, K, N	S, T	P, R	DAL,MSI,SOA
M55342^05@1#02&	1,020	200 (char. E, H) or 225 (char. K, M)	E, H, K, M	B, C, W	E	S, T	P, R	DAL,MSI,SOA

M55342^05@1#05&	1,050	200 (char. E, H) or 225 (char. K, M)	E, H, K, M	B, C, W	E	S, T	P, R	DAL,MSI,SOA
M55342^05@1#07&	1,070	200 (char. E, H) or 225 (char. K, M)	E, H, K, M	B, C, W	E	S, T	P, R	DAL,MSI,SOA
M55342^05@1#10&	1,100	200 (char. E, H) or 225 (char. K, M)	E, H, K, M	B, C, W	E, H, K	S, T	P, R	DAL,MSI,SOA
M55342^05@1#13&	1,130	200 (char. E, H) or 225 (char. K, M)	E, H, K, M	B, C, W	E	S, T	P, R	DAL,MSI,SOA
M55342^05@1#15&	1,150	200 (char. E, H) or 225 (char. K, M)	E, H, K, M	B, C, W	E	S, T	P, R	DAL,MSI,SOA
M55342^05@1#18&	1,180	200 (char. E, H) or 225 (char. K, M)	E, H, K, M	B, C, W	E	S, T	P, R	DAL,MSI,SOA
M55342^05@1#20&	1,200	200 (char. E, H) or 225 (char. K, M)	E, H, K, M	B, C, W	H, K, N	S, T	P, R	DAL,MSI,SOA
M55342^05@1#21&	1,210	200 (char. E, H) or 225 (char. K, M)	E, H, K, M	B, C, W	E	S, T	P, R	DAL,MSI,SOA
	Resistance	Power	Char.	Term.	Resistance Tol./	Level 1	Level 2	
Part Number	Value (Ohms)	Rating (mW)	(^)	Type (@)	Multiplier (#)	FRL (&)	FRL (&)	Manufacturer
M55342^05@1#24&	1,240	200 (char. E, H) or 225 (char. K, M)	E, H, K, M	B, C, W	E	S, T	P, R	DAL,MSI,SOA
M55342^05@1#27&	1,270	200 (char. E, H) or 225 (char. K, M)	E, H, K, M	B, C, W	E	S, T	P, R	DAL,MSI,SOA
M55342^05@1#30&	1,300	200 (char. E, H) or 225 (char. K, M)	E, H, K, M	B, C, W	E, H, K	S, T	P, R	DAL,MSI,SOA
M55342^05@1#33&	1,330	200 (char. E, H) or 225 (char. K, M)	E, H, K, M	B, C, W	E	S, T	P, R	DAL,MSI,SOA
M55342^05@1#37&	1,370	200 (char. E, H) or 225 (char. K, M)	E, H, K, M	B, C, W	E	S, T	P, R	DAL,MSI,SOA
M55342^05@1#40&	1,400	200 (char. E, H) or 225 (char. K, M)	E, H, K, M	B, C, W	E	S, T	P, R	DAL,MSI,SOA
M55342^05@1#43&	1,430	200 (char. E, H) or 225 (char. K, M)	E, H, K, M	B, C, W	E	S, T	P, R	DAL,MSI,SOA
M55342^05@1#47&	1,470	200 (char. E, H) or 225 (char. K, M)	E, H, K, M	B, C, W	E	S, T	P, R	DAL,MSI,SOA
M55342^05@1#50&	1,500	200 (char. E, H) or 225 (char. K, M)	E, H, K, M	B, C, W	E, H, K, N	S, T	P, R	DAL,MSI,SOA
	Resistance	Power	Char.	Term.	Resistance Tol./	Level 1	Level 2	
Part Number	Value (Ohms)	Rating (mW)	(^)	Type (@)	Multiplier (#)	FRL (&)	FRL (&)	Manufacturer
M55342^05@1#54&	1,540	200 (char. E, H) or 225 (char. K, M)	E, H, K, M	B, C, W	E	S, T	P, R	DAL,MSI,SOA
M55342^05@1#58&	1,580	200 (char. E, H) or 225 (char. K, M)	E, H, K, M	B, C, W	E	S, T	P, R	DAL,MSI,SOA
M55342^05@1#60&	1,600	200 (char. E, H) or 225 (char. K, M)	E, H, K, M	B, C, W	H, K	S, T	P, R	DAL,MSI,SOA
M55342^05@1#62&	1,620	200 (char. E, H) or 225 (char. K, M)	E, H, K, M	B, C, W	E	S, T	P, R	DAL,MSI,SOA
M55342^05@1#65&	1,650	200 (char. E, H) or 225 (char. K, M)	E, H, K, M	B, C, W	E	S, T	P, R	DAL,MSI,SOA
M55342^05@1#69&	1,690	200 (char. E, H) or 225 (char. K, M)	E, H, K, M	B, C, W	E	S, T	P, R	DAL,MSI,SOA
M55342^05@1#74&	1,740	200 (char. E, H) or 225 (char. K, M)	E, H, K, M	B, C, W	E	S, T	P, R	DAL,MSI,SOA
M55342^05@1#78&	1,780	200 (char. E, H) or 225 (char. K, M)	E, H, K, M	B, C, W	E	S, T	P, R	DAL,MSI,SOA
M55342^05@1#80&	1,800	200 (char. E, H) or 225 (char. K, M)	E, H, K, M	B, C, W	H, K, N	S, T	P, R	DAL,MSI,SOA
	Resistance	Power	Char.	Term.	Resistance Tol./	Level 1	Level 2	
Part Number	Value (Ohms)	Rating (mW)	(^)	Type (@)	Multiplier (#)	FRL (&)	FRL (&)	Manufacturer
M55342^05@1#82&	1,820	200 (char. E, H) or 225 (char. K, M)	E, H, K, M	B, C, W	E	S, T	P, R	DAL,MSI,SOA
M55342^05@1#87&	1,870	200 (char. E, H) or 225 (char. K, M)	E, H, K, M	B, C, W	E	S, T	P, R	DAL,MSI,SOA
M55342^05@1#91&	1,910	200 (char. E, H) or 225 (char. K, M)	E, H, K, M	B, C, W	E	S, T	P, R	DAL,MSI,SOA
M55342^05@1#96&	1,960	200 (char. E, H) or 225 (char. K, M)	E, H, K, M	B, C, W	E	S, T	P, R	DAL,MSI,SOA
M55342^05@2#00&	2,000	200 (char. E, H) or 225 (char. K, M)	E, H, K, M	B, C, W	E, H, K, N	S, T	P, R	DAL,MSI,SOA
M55342^05@2#05&	2,050	200 (char. E, H) or 225 (char. K, M)	E, H, K, M	B, C, W	E	S, T	P, R	DAL,MSI,SOA
M55342^05@2#10&	2,100	200 (char. E, H) or 225 (char. K, M)	E, H, K, M	B, C, W	E	S, T	P, R	DAL,MSI,SOA
M55342^05@2#15&	2,150	200 (char. E, H) or 225 (char. K, M)	E, H, K, M	B, C, W	E	S, T	P, R	DAL,MSI,SOA
M55342^05@2#20&	2,200	200 (char. E, H) or 225 (char. K, M)	E, H, K, M	B, C, W	H, K, N	S, T	P, R	DAL,MSI,SOA
	Resistance	Power	Char.	Term.	Resistance Tol./	Level 1	Level 2	
Part Number	Value (Ohms)	Rating (mW)	(^)	Type (@)	Multiplier (#)	FRL (&)	FRL (&)	Manufacturer
M55342^05@2#21&	2,210	200 (char. E, H) or 225 (char. K, M)	E, H, K, M	B, C, W	E	S, T	P, R	DAL,MSI,SOA
M55342^05@2#26&	2,260	200 (char. E, H) or 225 (char. K, M)	E, H, K, M	B, C, W	E	S, T	P, R	DAL,MSI,SOA
M55342^05@2#32&	2,320	200 (char. E, H) or 225 (char. K, M)	E, H, K, M	B, C, W	E	S, T	P, R	DAL,MSI,SOA
M55342^05@2#37&	2,370	200 (char. E, H) or 225 (char. K, M)	E, H, K, M	B, C, W	E	S, T	P, R	DAL,MSI,SOA

M55342^05@2#40&	2,400	200 (char. E, H) or 225 (char. K, M)	E, H, K, M	B, C, W	H, K	S, T	P, R	DAL,MSI,SOA
M55342^05@2#43&	2,430	200 (char. E, H) or 225 (char. K, M)	E, H, K, M	B, C, W	E	S, T	P, R	DAL,MSI,SOA
M55342^05@2#49&	2,490	200 (char. E, H) or 225 (char. K, M)	E, H, K, M	B, C, W	E	S, T	P, R	DAL,MSI,SOA
M55342^05@2#55&	2,550	200 (char. E, H) or 225 (char. K, M)	E, H, K, M	B, C, W	E	S, T	P, R	DAL,MSI,SOA
M55342^05@2#61&	2,610	200 (char. E, H) or 225 (char. K, M)	E, H, K, M	B, C, W	E	S, T	P, R	DAL,MSI,SOA
	Resistance	Power	Char.	Term.	Resistance Tol./	Level 1	Level 2	
Part Number	Value (Ohms)	Rating (mW)	(^)	Type (@)	Multiplier (#)	FRL (&)	FRL (&)	Manufacturer
M55342^05@2#67&	2,670	200 (char. E, H) or 225 (char. K, M)	E, H, K, M	B, C, W	E	S, T	P, R	DAL,MSI,SOA
M55342^05@2#70&	2,700	200 (char. E, H) or 225 (char. K, M)	E, H, K, M	B, C, W	H, K, N	S, T	P, R	DAL,MSI,SOA
M55342^05@2#74&	2,740	200 (char. E, H) or 225 (char. K, M)	E, H, K, M	B, C, W	E	S, T	P, R	DAL,MSI,SOA
M55342^05@2#80&	2,800	200 (char. E, H) or 225 (char. K, M)	E, H, K, M	B, C, W	E	S, T	P, R	DAL,MSI,SOA
M55342^05@2#87&	2,870	200 (char. E, H) or 225 (char. K, M)	E, H, K, M	B, C, W	E	S, T	P, R	DAL,MSI,SOA
M55342^05@2#94&	2,940	200 (char. E, H) or 225 (char. K, M)	E, H, K, M	B, C, W	E	S, T	P, R	DAL,MSI,SOA
M55342^05@3#00&	3,000	200 (char. E, H) or 225 (char. K, M)	E, H, K, M	B, C, W	H, K	S, T	P, R	DAL,MSI,SOA
M55342^05@3#01&	3,010	200 (char. E, H) or 225 (char. K, M)	E, H, K, M	B, C, W	E	S, T	P, R	DAL,MSI,SOA
M55342^05@3#09&	3,090	200 (char. E, H) or 225 (char. K, M)	E, H, K, M	B, C, W	E	S, T	P, R	DAL,MSI,SOA
	Resistance	Power	Char.	Term.	Resistance Tol./	Level 1	Level 2	
Part Number	Value (Ohms)	Rating (mW)	(^)	Type (@)	Multiplier (#)	FRL (&)	FRL (&)	Manufacturer
M55342^05@3#16&	3,160	200 (char. E, H) or 225 (char. K, M)	E, H, K, M	B, C, W	E	S, T	P, R	DAL,MSI,SOA
M55342^05@3#24&	3,240	200 (char. E, H) or 225 (char. K, M)	E, H, K, M	B, C, W	E	S, T	P, R	DAL,MSI,SOA
M55342^05@3#30&	3,300	200 (char. E, H) or 225 (char. K, M)	E, H, K, M	B, C, W	H, K, N	S, T	P, R	DAL,MSI,SOA
M55342^05@3#32&	3,320	200 (char. E, H) or 225 (char. K, M)	E, H, K, M	B, C, W	E	S, T	P, R	DAL,MSI,SOA
M55342^05@3#40&	3,400	200 (char. E, H) or 225 (char. K, M)	E, H, K, M	B, C, W	E	S, T	P, R	DAL,MSI,SOA
M55342^05@3#48&	3,480	200 (char. E, H) or 225 (char. K, M)	E, H, K, M	B, C, W	E	S, T	P, R	DAL,MSI,SOA
M55342^05@3#57&	3,570	200 (char. E, H) or 225 (char. K, M)	E, H, K, M	B, C, W	E	S, T	P, R	DAL,MSI,SOA
M55342^05@3#60&	3,600	200 (char. E, H) or 225 (char. K, M)	E, H, K, M	B, C, W	H, K	S, T	P, R	DAL,MSI,SOA
M55342^05@3#65&	3,650	200 (char. E, H) or 225 (char. K, M)	E, H, K, M	B, C, W	E	S, T	P, R	DAL,MSI,SOA
	Resistance	Power	Char.	Term.	Resistance Tol./	Level 1	Level 2	
Part Number	Value (Ohms)	Rating (mW)	(^)	Type (@)	Multiplier (#)	FRL (&)	FRL (&)	Manufacturer
M55342^05@3#74&	3,740	200 (char. E, H) or 225 (char. K, M)	E, H, K, M	B, C, W	E	S, T	P, R	DAL,MSI,SOA
M55342^05@3#83&	3,830	200 (char. E, H) or 225 (char. K, M)	E, H, K, M	B, C, W	E	S, T	P, R	DAL,MSI,SOA
M55342^05@3#90&	3,900	200 (char. E, H) or 225 (char. K, M)	E, H, K, M	B, C, W	H, K, N	S, T	P, R	DAL,MSI,SOA
M55342^05@3#92&	3,920	200 (char. E, H) or 225 (char. K, M)	E, H, K, M	B, C, W	E	S, T	P, R	DAL,MSI,SOA
M55342^05@4#02&	4,020	200 (char. E, H) or 225 (char. K, M)	E, H, K, M	B, C, W	E	S, T	P, R	DAL,MSI,SOA
M55342^05@4#12&	4,120	200 (char. E, H) or 225 (char. K, M)	E, H, K, M	B, C, W	E	S, T	P, R	DAL,MSI,SOA
M55342^05@4#22&	4,220	200 (char. E, H) or 225 (char. K, M)	E, H, K, M	B, C, W	E	S, T	P, R	DAL,MSI,SOA
M55342^05@4#30&	4,300	200 (char. E, H) or 225 (char. K, M)	E, H, K, M	B, C, W	H, K	S, T	P, R	DAL,MSI,SOA
M55342^05@4#32&	4,320	200 (char. E, H) or 225 (char. K, M)	E, H, K, M	B, C, W	E	S, T	P, R	DAL,MSI,SOA
	Resistance	Power	Char.	Term.	Resistance Tol./	Level 1	Level 2	
Part Number	Value (Ohms)	Rating (mW)	(^)	Type (@)	Multiplier (#)	FRL (&)	FRL (&)	Manufacturer
M55342^05@4#42&	4,420	200 (char. E, H) or 225 (char. K, M)	E, H, K, M	B, C, W	E	S, T	P, R	DAL,MSI,SOA
M55342^05@4#53&	4,530	200 (char. E, H) or 225 (char. K, M)	E, H, K, M	B, C, W	E	S, T	P, R	DAL,MSI,SOA
M55342^05@4#64&	4,640	200 (char. E, H) or 225 (char. K, M)	E, H, K, M	B, C, W	E	S, T	P, R	DAL,MSI,SOA
M55342^05@4#70&	4,700	200 (char. E, H) or 225 (char. K, M)	E, H, K, M	B, C, W	H, K, N	S, T	P, R	DAL,MSI,SOA
M55342^05@4#75&	4,750	200 (char. E, H) or 225 (char. K, M)	E, H, K, M	B, C, W	E	S, T	P, R	DAL,MSI,SOA
M55342^05@4#87&	4,870	200 (char. E, H) or 225 (char. K, M)	E, H, K, M	B, C, W	E	S, T	P, R	DAL,MSI,SOA
M55342^05@4#99&	4,990	200 (char. E, H) or 225 (char. K, M)	E, H, K, M	B, C, W	E	S, T	P, R	DAL,MSI,SOA

M55342^05@5#10&	5,100	200 (char. E, H) or 225 (char. K, M)	E, H, K, M	B, C, W	H, K	S, T	P, R	DAL,MSI,SOA
M55342^05@5#11&	5,110	200 (char. E, H) or 225 (char. K, M)	E, H, K, M	B, C, W	E	S, T	P, R	DAL,MSI,SOA
	Resistance	Power	Char.	Term.	Resistance Tol./	Level 1	Level 2	
Part Number	Value (Ohms)	Rating (mW)	(^)	Type (@)	Multiplier (#)	FRL (&)	FRL (&)	Manufacturer
M55342^05@5#23&	5,230	200 (char. E, H) or 225 (char. K, M)	E, H, K, M	B, C, W	E	S, T	P, R	DAL,MSI,SOA
M55342^05@5#36&	5,360	200 (char. E, H) or 225 (char. K, M)	E, H, K, M	B, C, W	E	S, T	P, R	DAL,MSI,SOA
M55342^05@5#49&	5,490	200 (char. E, H) or 225 (char. K, M)	E, H, K, M	B, C, W	E	S, T	P, R	DAL,MSI,SOA
M55342^05@5#60&	5,600	200 (char. E, H) or 225 (char. K, M)	E, H, K, M	B, C, W	H, K, N	S, T	P, R	DAL,MSI,SOA
M55342^05@5#62&	5,620	200 (char. E, H) or 225 (char. K, M)	E, H, K, M	B, C, W	E	S, T	P, R	DAL,MSI,SOA
M55342^05@5#76&	5,760	200 (char. E, H) or 225 (char. K, M)	E, H, K, M	B, C, W	E	S, T	P, R	DAL,MSI,SOA
M55342^05@5#90&	5,900	200 (char. E, H) or 225 (char. K, M)	E, H, K, M	B, C, W	E	S, T	P, R	DAL,MSI,SOA
M55342^05@6#04&	6,040	200 (char. E, H) or 225 (char. K, M)	E, H, K, M	B, C, W	E	S, T	P, R	DAL,MSI,SOA
M55342^05@6#19&	6,190	200 (char. E, H) or 225 (char. K, M)	E, H, K, M	B, C, W	E	S, T	P, R	DAL,MSI,SOA
	Resistance	Power	Char.	Term.	Resistance Tol./	Level 1	Level 2	
Part Number	Value (Ohms)	Rating (mW)	(^)	Type (@)	Multiplier (#)	FRL (&)	FRL (&)	Manufacturer
M55342^05@6#20&	6,200	200 (char. E, H) or 225 (char. K, M)	E, H, K, M	B, C, W	H, K	S, T	P, R	DAL,MSI,SOA
M55342^05@6#34&	6,340	200 (char. E, H) or 225 (char. K, M)	E, H, K, M	B, C, W	E	S, T	P, R	DAL,MSI,SOA
M55342^05@6#49&	6,490	200 (char. E, H) or 225 (char. K, M)	E, H, K, M	B, C, W	E	S, T	P, R	DAL,MSI,SOA
M55342^05@6#65&	6,650	200 (char. E, H) or 225 (char. K, M)	E, H, K, M	B, C, W	E	S, T	P, R	DAL,MSI,SOA
M55342^05@6#80&	6,800	200 (char. E, H) or 225 (char. K, M)	E, H, K, M	B, C, W	H, K, N	S, T	P, R	DAL,MSI,SOA
M55342^05@6#81&	6,810	200 (char. E, H) or 225 (char. K, M)	E, H, K, M	B, C, W	E	S, T	P, R	DAL,MSI,SOA
M55342^05@6#98&	6,980	200 (char. E, H) or 225 (char. K, M)	E, H, K, M	B, C, W	E	S, T	P, R	DAL,MSI,SOA
M55342^05@7#15&	7,150	200 (char. E, H) or 225 (char. K, M)	E, H, K, M	B, C, W	E	S, T	P, R	DAL,MSI,SOA
M55342^05@7#32&	7,320	200 (char. E, H) or 225 (char. K, M)	E, H, K, M	B, C, W	E	S, T	P, R	DAL,MSI,SOA
	Resistance	Power	Char.	Term.	Resistance Tol./	Level 1	Level 2	
Part Number	Value (Ohms)	Rating (mW)	(^)	Type (@)	Multiplier (#)	FRL (&)	FRL (&)	Manufacturer
M55342^05@7#50&	7,500	200 (char. E, H) or 225 (char. K, M)	E, H, K, M	B, C, W	E, H, K	S, T	P, R	DAL,MSI,SOA
M55342^05@7#68&	7,680	200 (char. E, H) or 225 (char. K, M)	E, H, K, M	B, C, W	E	S, T	P, R	DAL,MSI,SOA
M55342^05@7#87&	7,870	200 (char. E, H) or 225 (char. K, M)	E, H, K, M	B, C, W	E	S, T	P, R	DAL,MSI,SOA
M55342^05@8#06&	8,060	200 (char. E, H) or 225 (char. K, M)	E, H, K, M	B, C, W	E	S, T	P, R	DAL,MSI,SOA
M55342^05@8#20&	8,200	200 (char. E, H) or 225 (char. K, M)	E, H, K, M	B, C, W	H, K, N	S, T	P, R	DAL,MSI,SOA
M55342^05@8#25&	8,250	200 (char. E, H) or 225 (char. K, M)	E, H, K, M	B, C, W	E	S, T	P, R	DAL,MSI,SOA
M55342^05@8#45&	8,450	200 (char. E, H) or 225 (char. K, M)	E, H, K, M	B, C, W	E	S, T	P, R	DAL,MSI,SOA
M55342^05@8#66&	8,660	200 (char. E, H) or 225 (char. K, M)	E, H, K, M	B, C, W	E	S, T	P, R	DAL,MSI,SOA
M55342^05@8#87&	8,870	200 (char. E, H) or 225 (char. K, M)	E, H, K, M	B, C, W	E	S, T	P, R	DAL,MSI,SOA
	Resistance	Power	Char.	Term.	Resistance Tol./	Level 1	Level 2	
Part Number	Value (Ohms)	Rating (mW)	(^)	Type (@)	Multiplier (#)	FRL (&)	FRL (&)	Manufacturer
M55342^05@9#09&	9,090	200 (char. E, H) or 225 (char. K, M)	E, H, K, M	B, C, W	E	S, T	P, R	DAL,MSI,SOA
M55342^05@9#10&	9,100	200 (char. E, H) or 225 (char. K, M)	E, H, K, M	B, C, W	H, K	S, T	P, R	DAL,MSI,SOA
M55342^05@9#31&	9,310	200 (char. E, H) or 225 (char. K, M)	E, H, K, M	B, C, W	E	S, T	P, R	DAL,MSI,SOA
M55342^05@9#53&	9,530	200 (char. E, H) or 225 (char. K, M)	E, H, K, M	B, C, W	E	S, T	P, R	DAL,MSI,SOA
M55342^05@9#76&	9,760	200 (char. E, H) or 225 (char. K, M)	E, H, K, M	B, C, W	E	S, T	P, R	DAL,MSI,SOA
	Resistance	Power	Char.	Term.	Resistance Tol./	Level 1	Level 2	
Part Number	Value (Ohms)	Rating (mW)	(^)	Type (@)	Multiplier (#)	FRL (&)	FRL (&)	Manufacturer

	Resistance	Power	Char.	Term.	Resistance Tol./	Level 1	Level 2	
Part Number	Value (Ohms)	Rating (mW)	(^)	Type (@)	Multiplier (#)	FRL (&)	FRL (&)	Manufacturer
M55342^05@10#0&	10,000	200 (char. E, H) or 225 (char. K, M)	E, H, K, M	B, C, W	E, H, K, N	S, T	P, R	DAL,MSI,SOA
M55342^05@10#2&	10,200	200 (char. E, H) or 225 (char. K, M)	E, H, K, M	B, C, W	E	S, T	P, R	DAL,MSI,SOA
M55342^05@10#5&	10,500	200 (char. E, H) or 225 (char. K, M)	E, H, K, M	B, C, W	E	S, T	P, R	DAL,MSI,SOA
M55342^05@10#7&	10,700	200 (char. E, H) or 225 (char. K, M)	E, H, K, M	B, C, W	E	S, T	P, R	DAL,MSI,SOA
M55342^05@11#0&	11,000	200 (char. E, H) or 225 (char. K, M)	E, H, K, M	B, C, W	E, H, K	S, T	P, R	DAL,MSI,SOA
M55342^05@11#3&	11,300	200 (char. E, H) or 225 (char. K, M)	E, H, K, M	B, C, W	E	S, T	P, R	DAL,MSI,SOA
M55342^05@11#5&	11,500	200 (char. E, H) or 225 (char. K, M)	E, H, K, M	B, C, W	E	S, T	P, R	DAL,MSI,SOA
M55342^05@11#8&	11,800	200 (char. E, H) or 225 (char. K, M)	E, H, K, M	B, C, W	E	S, T	P, R	DAL,MSI,SOA
M55342^05@12#0&	12,000	200 (char. E, H) or 225 (char. K, M)	E, H, K, M	B, C, W	H, K, N	S, T	P, R	DAL,MSI,SOA
	Resistance	Power	Char.	Term.	Resistance Tol./	Level 1	Level 2	
Part Number	Value (Ohms)	Rating (mW)	(^)	Type (@)	Multiplier (#)	FRL (&)	FRL (&)	Manufacturer
M55342^05@12#1&	12,100	200 (char. E, H) or 225 (char. K, M)	E, H, K, M	B, C, W	E	S, T	P, R	DAL,MSI,SOA
M55342^05@12#4&	12,400	200 (char. E, H) or 225 (char. K, M)	E, H, K, M	B, C, W	E	S, T	P, R	DAL,MSI,SOA
M55342^05@12#7&	12,700	200 (char. E, H) or 225 (char. K, M)	E, H, K, M	B, C, W	E	S, T	P, R	DAL,MSI,SOA
M55342^05@13#0&	13,000	200 (char. E, H) or 225 (char. K, M)	E, H, K, M	B, C, W	E, H, K	S, T	P, R	DAL,MSI,SOA
M55342^05@13#3&	13,300	200 (char. E, H) or 225 (char. K, M)	E, H, K, M	B, C, W	E	S, T	P, R	DAL,MSI,SOA
M55342^05@13#7&	13,700	200 (char. E, H) or 225 (char. K, M)	E, H, K, M	B, C, W	E	S, T	P, R	DAL,MSI,SOA
M55342^05@14#0&	14,000	200 (char. E, H) or 225 (char. K, M)	E, H, K, M	B, C, W	E	S, T	P, R	DAL,MSI,SOA
M55342^05@14#3&	14,300	200 (char. E, H) or 225 (char. K, M)	E, H, K, M	B, C, W	E	S, T	P, R	DAL,MSI,SOA
M55342^05@14#7&	14,700	200 (char. E, H) or 225 (char. K, M)	E, H, K, M	B, C, W	E	S, T	P, R	DAL,MSI,SOA
	Resistance	Power	Char.	Term.	Resistance Tol./	Level 1	Level 2	
Part Number	Value (Ohms)	Rating (mW)	(^)	Type (@)	Multiplier (#)	FRL (&)	FRL (&)	Manufacturer
M55342^05@15#0&	15,000	200 (char. E, H) or 225 (char. K, M)	E, H, K, M	B, C, W	E, H, K, N	S, T	P, R	DAL,MSI,SOA
M55342^05@15#4&	15,400	200 (char. E, H) or 225 (char. K, M)	E, H, K, M	B, C, W	E	S, T	P, R	DAL,MSI,SOA
M55342^05@15#8&	15,800	200 (char. E, H) or 225 (char. K, M)	E, H, K, M	B, C, W	E	S, T	P, R	DAL,MSI,SOA
M55342^05@16#0&	16,000	200 (char. E, H) or 225 (char. K, M)	E, H, K, M	B, C, W	H, K	S, T	P, R	DAL,MSI,SOA
M55342^05@16#2&	16,200	200 (char. E, H) or 225 (char. K, M)	E, H, K, M	B, C, W	E	S, T	P, R	DAL,MSI,SOA
M55342^05@16#5&	16,500	200 (char. E, H) or 225 (char. K, M)	E, H, K, M	B, C, W	E	S, T	P, R	DAL,MSI,SOA
M55342^05@16#9&	16,900	200 (char. E, H) or 225 (char. K, M)	E, H, K, M	B, C, W	E	S, T	P, R	DAL,MSI,SOA
M55342^05@17#4&	17,400	200 (char. E, H) or 225 (char. K, M)	E, H, K, M	B, C, W	E	S, T	P, R	DAL,MSI,SOA
M55342^05@17#8&	17,800	200 (char. E, H) or 225 (char. K, M)	E, H, K, M	B, C, W	E	S, T	P, R	DAL,MSI,SOA
	Resistance	Power	Char.	Term.	Resistance Tol./	Level 1	Level 2	
Part Number	Value (Ohms)	Rating (mW)	(^)	Type (@)	Multiplier (#)	FRL (&)	FRL (&)	Manufacturer
M55342^05@18#0&	18,000	200 (char. E, H) or 225 (char. K, M)	E, H, K, M	B, C, W	H, K, N	S, T	P, R	DAL,MSI,SOA
M55342^05@18#2&	18,200	200 (char. E, H) or 225 (char. K, M)	E, H, K, M	B, C, W	E	S, T	P, R	DAL,MSI,SOA
M55342^05@18#7&	18,700	200 (char. E, H) or 225 (char. K, M)	E, H, K, M	B, C, W	E	S, T	P, R	DAL,MSI,SOA
M55342^05@19#1&	19,100	200 (char. E, H) or 225 (char. K, M)	E, H, K, M	B, C, W	E	S, T	P, R	DAL,MSI,SOA
M55342^05@19#6&	19,600	200 (char. E, H) or 225 (char. K, M)	E, H, K, M	B, C, W	E	S, T	P, R	DAL,MSI,SOA
M55342^05@20#0&	20,000	200 (char. E, H) or 225 (char. K, M)	E, H, K, M	B, C, W	E, H, K, N	S, T	P, R	DAL,MSI,SOA
M55342^05@20#5&	20,500	200 (char. E, H) or 225 (char. K, M)	E, H, K, M	B, C, W	E	S, T	P, R	DAL,MSI,SOA
M55342^05@21#0&	21,000	200 (char. E, H) or 225 (char. K, M)	E, H, K, M	B, C, W	E	S, T	P, R	DAL,MSI,SOA
M55342^05@21#5&	21,500	200 (char. E, H) or 225 (char. K, M)	E, H, K, M	B, C, W	E	S, T	P, R	DAL,MSI,SOA
	Resistance	Power	Char.	Term.	Resistance Tol./	Level 1	Level 2	

Part Number	Value (Ohms)	Rating (mW)	(^)	Type (@)	Multiplier (#)	FRL (&)	FRL (&)	Manufacturer
M55342^05@22#0&	22,000	200 (char. E, H) or 225 (char. K, M)	E, H, K, M	B, C, W	H, K, N	S, T	P, R	DAL,MSI,SOA
M55342^05@22#1&	22,100	200 (char. E, H) or 225 (char. K, M)	E, H, K, M	B, C, W	E	S, T	P, R	DAL,MSI,SOA
M55342^05@22#6&	22,600	200 (char. E, H) or 225 (char. K, M)	E, H, K, M	B, C, W	E	S, T	P, R	DAL,MSI,SOA
M55342^05@23#2&	23,200	200 (char. E, H) or 225 (char. K, M)	E, H, K, M	B, C, W	E	S, T	P, R	DAL,MSI,SOA
M55342^05@23#7&	23,700	200 (char. E, H) or 225 (char. K, M)	E, H, K, M	B, C, W	E	S, T	P, R	DAL,MSI,SOA
M55342^05@24#0&	24,000	200 (char. E, H) or 225 (char. K, M)	E, H, K, M	B, C, W	H, K	S, T	P, R	DAL,MSI,SOA
M55342^05@24#3&	24,300	200 (char. E, H) or 225 (char. K, M)	E, H, K, M	B, C, W	E	S, T	P, R	DAL,MSI,SOA
M55342^05@24#9&	24,900	200 (char. E, H) or 225 (char. K, M)	E, H, K, M	B, C, W	E	S, T	P, R	DAL,MSI,SOA
M55342^05@25#5&	25,500	200 (char. E, H) or 225 (char. K, M)	E, H, K, M	B, C, W	E	S, T	P, R	DAL,MSI,SOA
	Resistance	Power	Char.	Term.	Resistance Tol./	Level 1	Level 2	
Part Number	Value (Ohms)	Rating (mW)	(^)	Type (@)	Multiplier (#)	FRL (&)	FRL (&)	Manufacturer
M55342^05@26#1&	26,100	200 (char. E, H) or 225 (char. K, M)	E, H, K, M	B, C, W	E	S, T	P, R	DAL,MSI,SOA
M55342^05@26#7&	26,700	200 (char. E, H) or 225 (char. K, M)	E, H, K, M	B, C, W	E	S, T	P, R	DAL,MSI,SOA
M55342^05@27#0&	27,000	200 (char. E, H) or 225 (char. K, M)	E, H, K, M	B, C, W	H, K, N	S, T	P, R	DAL,MSI,SOA
M55342^05@27#4&	27,400	200 (char. E, H) or 225 (char. K, M)	E, H, K, M	B, C, W	E	S, T	P, R	DAL,MSI,SOA
M55342^05@28#0&	28,000	200 (char. E, H) or 225 (char. K, M)	E, H, K, M	B, C, W	E	S, T	P, R	DAL,MSI,SOA
M55342^05@28#7&	28,700	200 (char. E, H) or 225 (char. K, M)	E, H, K, M	B, C, W	E	S, T	P, R	DAL,MSI,SOA
M55342^05@29#4&	29,400	200 (char. E, H) or 225 (char. K, M)	E, H, K, M	B, C, W	E	S, T	P, R	DAL,MSI,SOA
M55342^05@30#0&	30,000	200 (char. E, H) or 225 (char. K, M)	E, H, K, M	B, C, W	H, K	S, T	P, R	DAL,MSI,SOA
M55342^05@30#1&	30,100	200 (char. E, H) or 225 (char. K, M)	E, H, K, M	B, C, W	E	S, T	P, R	DAL,MSI,SOA
	Resistance	Power	Char.	Term.	Resistance Tol./	Level 1	Level 2	
Part Number	Value (Ohms)	Rating (mW)	(^)	Type (@)	Multiplier (#)	FRL (&)	FRL (&)	Manufacturer
M55342^05@30#9&	30,900	200 (char. E, H) or 225 (char. K, M)	E, H, K, M	B, C, W	E	S, T	P, R	DAL,MSI,SOA
M55342^05@31#6&	31,600	200 (char. E, H) or 225 (char. K, M)	E, H, K, M	B, C, W	E	S, T	P, R	DAL,MSI,SOA
M55342^05@32#4&	32,400	200 (char. E, H) or 225 (char. K, M)	E, H, K, M	B, C, W	E	S, T	P, R	DAL,MSI,SOA
M55342^05@33#0&	33,000	200 (char. E, H) or 225 (char. K, M)	E, H, K, M	B, C, W	H, K, N	S, T	P, R	DAL,MSI,SOA
M55342^05@33#2&	33,200	200 (char. E, H) or 225 (char. K, M)	E, H, K, M	B, C, W	E	S, T	P, R	DAL,MSI,SOA
M55342^05@34#0&	34,000	200 (char. E, H) or 225 (char. K, M)	E, H, K, M	B, C, W	E	S, T	P, R	DAL,MSI,SOA
M55342^05@34#8&	34,800	200 (char. E, H) or 225 (char. K, M)	E, H, K, M	B, C, W	E	S, T	P, R	DAL,MSI,SOA
M55342^05@35#7&	35,700	200 (char. E, H) or 225 (char. K, M)	E, H, K, M	B, C, W	E	S, T	P, R	DAL,MSI,SOA
M55342^05@36#0&	36,000	200 (char. E, H) or 225 (char. K, M)	E, H, K, M	B, C, W	H, K	S, T	P, R	DAL,MSI,SOA
	Resistance	Power	Char.	Term.	Resistance Tol./	Level 1	Level 2	
Part Number	Value (Ohms)	Rating (mW)	(^)	Type (@)	Multiplier (#)	FRL (&)	FRL (&)	Manufacturer
M55342^05@36#5&	36,500	200 (char. E, H) or 225 (char. K, M)	E, H, K, M	B, C, W	E	S, T	P, R	DAL,MSI,SOA
M55342^05@37#4&	37,400	200 (char. E, H) or 225 (char. K, M)	E, H, K, M	B, C, W	E	S, T	P, R	DAL,MSI,SOA
M55342^05@38#3&	38,300	200 (char. E, H) or 225 (char. K, M)	E, H, K, M	B, C, W	E	S, T	P, R	DAL,MSI,SOA
M55342^05@39#0&	39,000	200 (char. E, H) or 225 (char. K, M)	E, H, K, M	B, C, W	H, K, N	S, T	P, R	DAL,MSI,SOA
M55342^05@39#2&	39,200	200 (char. E, H) or 225 (char. K, M)	E, H, K, M	B, C, W	E	S, T	P, R	DAL,MSI,SOA
M55342^05@40#2&	40,200	200 (char. E, H) or 225 (char. K, M)	E, H, K, M	B, C, W	E	S, T	P, R	DAL,MSI,SOA
M55342^05@41#2&	41,200	200 (char. E, H) or 225 (char. K, M)	E, H, K, M	B, C, W	E	S, T	P, R	DAL,MSI,SOA
M55342^05@42#2&	42,200	200 (char. E, H) or 225 (char. K, M)	E, H, K, M	B, C, W	E	S, T	P, R	DAL,MSI,SOA
M55342^05@43#0&	43,000	200 (char. E, H) or 225 (char. K, M)	E, H, K, M	B, C, W	H, K	S, T	P, R	DAL,MSI,SOA
	Resistance	Power	Char.	Term.	Resistance Tol./	Level 1	Level 2	
Part Number	Value (Ohms)	Rating (mW)	(^)	Type (@)	Multiplier (#)	FRL (&)	FRL (&)	Manufacturer
M55342^05@43#2&	43,200	200 (char. E, H) or 225 (char. K, M)	E, H, K, M	B, C, W	E	S, T	P, R	DAL,MSI,SOA
M55342^05@44#2&	44,200	200 (char. E, H) or 225 (char. K, M)	E, H, K, M	B, C, W	E	S, T	P, R	DAL,MSI,SOA

M55342^05@45#3&	45,300	200 (char. E, H) or 225 (char. K, M)	E, H, K, M	B, C, W	E	S, T	P, R	DAL,MSI,SOA
M55342^05@46#4&	46,400	200 (char. E, H) or 225 (char. K, M)	E, H, K, M	B, C, W	E	S, T	P, R	DAL,MSI,SOA
M55342^05@47#0&	47,000	200 (char. E, H) or 225 (char. K, M)	E, H, K, M	B, C, W	H, K, N	S, T	P, R	DAL,MSI,SOA
M55342^05@47#5&	47,500	200 (char. E, H) or 225 (char. K, M)	E, H, K, M	B, C, W	E	S, T	P, R	DAL,MSI,SOA
M55342^05@48#7&	48,700	200 (char. E, H) or 225 (char. K, M)	E, H, K, M	B, C, W	E	S, T	P, R	DAL,MSI,SOA
M55342^05@49#9&	49,900	200 (char. E, H) or 225 (char. K, M)	E, H, K, M	B, C, W	E	S, T	P, R	DAL,MSI,SOA
M55342^05@51#0&	51,000	200 (char. E, H) or 225 (char. K, M)	E, H, K, M	B, C, W	H, K	S, T	P, R	DAL,MSI,SOA
	Resistance	Power	Char.	Term.	Resistance Tol./	Level 1	Level 2	
Part Number	Value (Ohms)	Rating (mW)	(^)	Type (@)	Multiplier (#)	FRL (&)	FRL (&)	Manufacturer
M55342^05@51#1&	51,100	200 (char. E, H) or 225 (char. K, M)	E, H, K, M	B, C, W	E	S, T	P, R	DAL,MSI,SOA
M55342^05@52#3&	52,300	200 (char. E, H) or 225 (char. K, M)	E, H, K, M	B, C, W	E	S, T	P, R	DAL,MSI,SOA
M55342^05@53#6&	53,600	200 (char. E, H) or 225 (char. K, M)	E, H, K, M	B, C, W	E	S, T	P, R	DAL,MSI,SOA
M55342^05@54#9&	54,900	200 (char. E, H) or 225 (char. K, M)	E, H, K, M	B, C, W	E	S, T	P, R	DAL,MSI,SOA
M55342^05@56#0&	56,000	200 (char. E, H) or 225 (char. K, M)	E, H, K, M	B, C, W	H, K, N	S, T	P, R	DAL,MSI,SOA
M55342^05@56#2&	56,200	200 (char. E, H) or 225 (char. K, M)	E, H, K, M	B, C, W	E	S, T	P, R	DAL,MSI,SOA
M55342^05@57#6&	57,600	200 (char. E, H) or 225 (char. K, M)	E, H, K, M	B, C, W	E	S, T	P, R	DAL,MSI,SOA
M55342^05@59#0&	59,000	200 (char. E, H) or 225 (char. K, M)	E, H, K, M	B, C, W	E	S, T	P, R	DAL,MSI,SOA
M55342^05@60#4&	60,400	200 (char. E, H) or 225 (char. K, M)	E, H, K, M	B, C, W	E	S, T	P, R	DAL,MSI,SOA
	Resistance	Power	Char.	Term.	Resistance Tol./	Level 1	Level 2	
Part Number	Value (Ohms)	Rating (mW)	(^)	Type (@)	Multiplier (#)	FRL (&)	FRL (&)	Manufacturer
M55342^05@61#9&	61,900	200 (char. E, H) or 225 (char. K, M)	E, H, K, M	B, C, W	E	S, T	P, R	DAL,MSI,SOA
M55342^05@62#0&	62,000	200 (char. E, H) or 225 (char. K, M)	E, H, K, M	B, C, W	H, K	S, T	P, R	DAL,MSI,SOA
M55342^05@63#4&	63,400	200 (char. E, H) or 225 (char. K, M)	E, H, K, M	B, C, W	E	S, T	P, R	DAL,MSI,SOA
M55342^05@64#9&	64,900	200 (char. E, H) or 225 (char. K, M)	E, H, K, M	B, C, W	E	S, T	P, R	DAL,MSI,SOA
M55342^05@66#5&	66,500	200 (char. E, H) or 225 (char. K, M)	E, H, K, M	B, C, W	E	S, T	P, R	DAL,MSI,SOA
M55342^05@68#0&	68,000	200 (char. E, H) or 225 (char. K, M)	E, H, K, M	B, C, W	H, K, N	S, T	P, R	DAL,MSI,SOA
M55342^05@68#1&	68,100	200 (char. E, H) or 225 (char. K, M)	E, H, K, M	B, C, W	E	S, T	P, R	DAL,MSI,SOA
M55342^05@69#8&	69,800	200 (char. E, H) or 225 (char. K, M)	E, H, K, M	B, C, W	E	S, T	P, R	DAL,MSI,SOA
M55342^05@71#5&	71,500	200 (char. E, H) or 225 (char. K, M)	E, H, K, M	B, C, W	E	S, T	P, R	DAL,MSI,SOA
	Resistance	Power	Char.	Term.	Resistance Tol./	Level 1	Level 2	
Part Number	Value (Ohms)	Rating (mW)	(^)	Type (@)	Multiplier (#)	FRL (&)	FRL (&)	Manufacturer
M55342^05@73#2&	73,200	200 (char. E, H) or 225 (char. K, M)	E, H, K, M	B, C, W	E	S, T	P, R	DAL,MSI,SOA
M55342^05@75#0&	75,000	200 (char. E, H) or 225 (char. K, M)	E, H, K, M	B, C, W	E, H, K	S, T	P, R	DAL,MSI,SOA
M55342^05@76#8&	76,800	200 (char. E, H) or 225 (char. K, M)	E, H, K, M	B, C, W	E	S, T	P, R	DAL,MSI,SOA
M55342^05@78#7&	78,700	200 (char. E, H) or 225 (char. K, M)	E, H, K, M	B, C, W	E	S, T	P, R	DAL,MSI,SOA
M55342^05@80#6&	80,600	200 (char. E, H) or 225 (char. K, M)	E, H, K, M	B, C, W	E	S, T	P, R	DAL,MSI,SOA
M55342^05@82#0&	82,000	200 (char. E, H) or 225 (char. K, M)	E, H, K, M	B, C, W	H, K, N	S, T	P, R	DAL,MSI,SOA
M55342^05@82#5&	82,500	200 (char. E, H) or 225 (char. K, M)	E, H, K, M	B, C, W	E	S, T	P, R	DAL,MSI,SOA
M55342^05@84#5&	84,500	200 (char. E, H) or 225 (char. K, M)	E, H, K, M	B, C, W	E	S, T	P, R	DAL,MSI,SOA
M55342^05@86#6&	86,600	200 (char. E, H) or 225 (char. K, M)	E, H, K, M	B, C, W	E	S, T	P, R	DAL,MSI,SOA
	Resistance	Power	Char.	Term.	Resistance Tol./	Level 1	Level 2	
Part Number	Value (Ohms)	Rating (mW)	(^)	Type (@)	Multiplier (#)	FRL (&)	FRL (&)	Manufacturer
M55342^05@88#7&	88,700	200 (char. E, H) or 225 (char. K, M)	E, H, K, M	B, C, W	E	S, T	P, R	DAL,MSI,SOA
M55342^05@90#9&	90,900	200 (char. E, H) or 225 (char. K, M)	E, H, K, M	B, C, W	E	S, T	P, R	DAL,MSI,SOA
M55342^05@91#0&	91,000	200 (char. E, H) or 225 (char. K, M)	E, H, K, M	B, C, W	H, K	S, T	P, R	DAL,MSI,SOA
M55342^05@93#1&	93,100	200 (char. E, H) or 225 (char. K, M)	E, H, K, M	B, C, W	E	S, T	P, R	DAL,MSI,SOA
M55342^05@95#3&	95,300	200 (char. E, H) or 225 (char. K, M)	E, H, K, M	B, C, W	E	S, T	P, R	DAL,MSI,SOA

M55342^05@97#6&	97,600	200 (char. E, H) or 225 (char. K, M)	E, H, K, M	B, C, W	E	S, T	P, R	DAL,MSI,SOA
	Resistance	Power	Char.	Term.	Resistance Tol./	Level 1	Level 2	
Part Number	Value (Ohms)	Rating (mW)	(^)	Type (@)	Multiplier (#)	FRL (&)	FRL (&)	Manufacturer

MIL-PRF-55342/5 (RM2208) Film Chip Resistors: 100,000 Ohms Through 976,000 Ohms

	Resistance	Power	Char.	Term.	Resistance Tol./	Level 1	Level 2	
Part Number	Value (Ohms)	Rating (mW)	(^)	Type (@)	Multiplier (#)	FRL (&)	FRL (&)	Manufacturer
M55342^05@100#&	100,000	200 (char. E, H) or 225 (char. K, M)	E, H, K, M	B, C, W	E, H, K, N	S, T	P, R	DAL,MSI,SOA
M55342^05@102#&	102,000	200 (char. E, H) or 225 (char. K, M)	E, H, K, M	B, C, W	E	S, T	P, R	DAL,MSI,SOA
M55342^05@105#&	105,000	200 (char. E, H) or 225 (char. K, M)	E, H, K, M	B, C, W	E	S, T	P, R	DAL,MSI,SOA
M55342^05@107#&	107,000	200 (char. E, H) or 225 (char. K, M)	E, H, K, M	B, C, W	E	S, T	P, R	DAL,MSI,SOA
M55342^05@110#&	110,000	200 (char. E, H) or 225 (char. K, M)	E, H, K, M	B, C, W	E, H, K	S, T	P, R	DAL,MSI,SOA
M55342^05@113#&	113,000	200 (char. E, H) or 225 (char. K, M)	E, H, K, M	B, C, W	E	S, T	P, R	DAL,MSI,SOA
M55342^05@115#&	115,000	200 (char. E, H) or 225 (char. K, M)	E, H, K, M	B, C, W	E	S, T	P, R	DAL,MSI,SOA
M55342^05@118#&	118,000	200 (char. E, H) or 225 (char. K, M)	E, H, K, M	B, C, W	E	S, T	P, R	DAL,MSI,SOA
M55342^05@120#&	120,000	200 (char. E, H) or 225 (char. K, M)	E, H, K, M	B, C, W	H, K, N	S, T	P, R	DAL,MSI,SOA
	Resistance	Power	Char.	Term.	Resistance Tol./	Level 1	Level 2	
Part Number	Value (Ohms)	Rating (mW)	(^)	Type (@)	Multiplier (#)	FRL (&)	FRL (&)	Manufacturer
M55342^05@121#&	121,000	200 (char. E, H) or 225 (char. K, M)	E, H, K, M	B, C, W	E	S, T	P, R	DAL,MSI,SOA
M55342^05@124#&	124,000	200 (char. E, H) or 225 (char. K, M)	E, H, K, M	B, C, W	E	S, T	P, R	DAL,MSI,SOA
M55342^05@127#&	127,000	200 (char. E, H) or 225 (char. K, M)	E, H, K, M	B, C, W	E	S, T	P, R	DAL,MSI,SOA
M55342^05@130#&	130,000	200 (char. E, H) or 225 (char. K, M)	E, H, K, M	B, C, W	E, H, K	S, T	P, R	DAL,MSI,SOA
M55342^05@133#&	133,000	200 (char. E, H) or 225 (char. K, M)	E, H, K, M	B, C, W	E	S, T	P, R	DAL,MSI,SOA
M55342^05@137#&	137,000	200 (char. E, H) or 225 (char. K, M)	E, H, K, M	B, C, W	E	S, T	P, R	DAL,MSI,SOA
M55342^05@140#&	140,000	200 (char. E, H) or 225 (char. K, M)	E, H, K, M	B, C, W	E	S, T	P, R	DAL,MSI,SOA
M55342^05@143#&	143,000	200 (char. E, H) or 225 (char. K, M)	E, H, K, M	B, C, W	E	S, T	P, R	DAL,MSI,SOA
M55342^05@147#&	147,000	200 (char. E, H) or 225 (char. K, M)	E, H, K, M	B, C, W	E	S, T	P, R	DAL,MSI,SOA
	Resistance	Power	Char.	Term.	Resistance Tol./	Level 1	Level 2	
Part Number	Value (Ohms)	Rating (mW)	(^)	Type (@)	Multiplier (#)	FRL (&)	FRL (&)	Manufacturer
M55342^05@150#&	150,000	200 (char. E, H) or 225 (char. K, M)	E, H, K, M	B, C, W	E, H, K, N	S, T	P, R	DAL,MSI,SOA
M55342^05@154#&	154,000	200 (char. E, H) or 225 (char. K, M)	E, H, K, M	B, C, W	E	S, T	P, R	DAL,MSI,SOA
M55342^05@158#&	158,000	200 (char. E, H) or 225 (char. K, M)	E, H, K, M	B, C, W	E	S, T	P, R	DAL,MSI,SOA
M55342^05@160#&	160,000	200 (char. E, H) or 225 (char. K, M)	E, H, K, M	B, C, W	H, K	S, T	P, R	DAL,MSI,SOA
M55342^05@162#&	162,000	200 (char. E, H) or 225 (char. K, M)	E, H, K, M	B, C, W	E	S, T	P, R	DAL,MSI,SOA
M55342^05@165#&	165,000	200 (char. E, H) or 225 (char. K, M)	E, H, K, M	B, C, W	E	S, T	P, R	DAL,MSI,SOA
M55342^05@169#&	169,000	200 (char. E, H) or 225 (char. K, M)	E, H, K, M	B, C, W	E	S, T	P, R	DAL,MSI,SOA
M55342^05@174#&	174,000	200 (char. E, H) or 225 (char. K, M)	E, H, K, M	B, C, W	E	S, T	P, R	DAL,MSI,SOA
M55342^05@178#&	178,000	200 (char. E, H) or 225 (char. K, M)	E, H, K, M	B, C, W	E	S, T	P, R	DAL,MSI,SOA
	Resistance	Power	Char.	Term.	Resistance Tol./	Level 1	Level 2	
Part Number	Value (Ohms)	Rating (mW)	(^)	Type (@)	Multiplier (#)	FRL (&)	FRL (&)	Manufacturer
M55342^05@180#&	180,000	200 (char. E, H) or 225 (char. K, M)	E, H, K, M	B, C, W	H, K, N	S, T	P, R	DAL,MSI,SOA
M55342^05@182#&	182,000	200 (char. E, H) or 225 (char. K, M)	E, H, K, M	B, C, W	E	S, T	P, R	DAL,MSI,SOA
M55342^05@187#&	187,000	200 (char. E, H) or 225 (char. K, M)	E, H, K, M	B, C, W	E	S, T	P, R	DAL,MSI,SOA
M55342^05@191#&	191,000	200 (char. E, H) or 225 (char. K, M)	E, H, K, M	B, C, W	E	S, T	P, R	DAL,MSI,SOA

M55342^05@196#&	196,000	200 (char. E, H) or 225 (char. K, M)	E, H, K, M	B, C, W	E	S, T	P, R	DAL,MSI,SOA
M55342^05@200#&	200,000	200 (char. E, H) or 225 (char. K, M)	E, H, K, M	B, C, W	E, H, K, N	S, T	P, R	DAL,MSI,SOA
M55342^05@205#&	205,000	200 (char. E, H) or 225 (char. K, M)	E, H, K, M	B, C, W	E	S, T	P, R	DAL,MSI,SOA
M55342^05@210#&	210,000	200 (char. E, H) or 225 (char. K, M)	E, H, K, M	B, C, W	E	S, T	P, R	DAL,MSI,SOA
M55342^05@215#&	215,000	200 (char. E, H) or 225 (char. K, M)	E, H, K, M	B, C, W	E	S, T	P, R	DAL,MSI,SOA
	Resistance	Power	Char.	Term.	Resistance Tol./	Level 1	Level 2	
Part Number	Value (Ohms)	Rating (mW)	(^)	Type (@)	Multiplier (#)	FRL (&)	FRL (&)	Manufacturer
M55342^05@220#&	220,000	200 (char. E, H) or 225 (char. K, M)	E, H, K, M	B, C, W	H, K, N	S, T	P, R	DAL,MSI,SOA
M55342^05@221#&	221,000	200 (char. E, H) or 225 (char. K, M)	E, H, K, M	B, C, W	E	S, T	P, R	DAL,MSI,SOA
M55342^05@226#&	226,000	200 (char. E, H) or 225 (char. K, M)	E, H, K, M	B, C, W	E	S, T	P, R	DAL,MSI,SOA
M55342^05@232#&	232,000	200 (char. E, H) or 225 (char. K, M)	E, H, K, M	B, C, W	E	S, T	P, R	DAL,MSI,SOA
M55342^05@237#&	237,000	200 (char. E, H) or 225 (char. K, M)	E, H, K, M	B, C, W	E	S, T	P, R	DAL,MSI,SOA
M55342^05@240#&	240,000	200 (char. E, H) or 225 (char. K, M)	E, H, K, M	B, C, W	H, K	S, T	P, R	DAL,MSI,SOA
M55342^05@243#&	243,000	200 (char. E, H) or 225 (char. K, M)	E, H, K, M	B, C, W	E	S, T	P, R	DAL,MSI,SOA
M55342^05@249#&	249,000	200 (char. E, H) or 225 (char. K, M)	E, H, K, M	B, C, W	E	S, T	P, R	DAL,MSI,SOA
M55342^05@255#&	255,000	200 (char. E, H) or 225 (char. K, M)	E, H, K, M	B, C, W	E	S, T	P, R	DAL,MSI,SOA
	Resistance	Power	Char.	Term.	Resistance Tol./	Level 1	Level 2	
Part Number	Value (Ohms)	Rating (mW)	(^)	Type (@)	Multiplier (#)	FRL (&)	FRL (&)	Manufacturer
M55342^05@261#&	261,000	200 (char. E, H) or 225 (char. K, M)	E, H, K, M	B, C, W	E	S, T	P, R	DAL,MSI,SOA
M55342^05@267#&	267,000	200 (char. E, H) or 225 (char. K, M)	E, H, K, M	B, C, W	E	S, T	P, R	DAL,MSI,SOA
M55342^05@270#&	270,000	200 (char. E, H) or 225 (char. K, M)	E, H, K, M	B, C, W	H, K, N	S, T	P, R	DAL,MSI,SOA
M55342^05@274#&	274,000	200 (char. E, H) or 225 (char. K, M)	E, H, K, M	B, C, W	E	S, T	P, R	DAL,MSI,SOA
M55342^05@280#&	280,000	200 (char. E, H) or 225 (char. K, M)	E, H, K, M	B, C, W	E	S, T	P, R	DAL,MSI,SOA
M55342^05@287#&	287,000	200 (char. E, H) or 225 (char. K, M)	E, H, K, M	B, C, W	E	S, T	P, R	DAL,MSI,SOA
M55342^05@294#&	294,000	200 (char. E, H) or 225 (char. K, M)	E, H, K, M	B, C, W	E	S, T	P, R	DAL,MSI,SOA
M55342^05@300#&	300,000	200 (char. E, H) or 225 (char. K, M)	E, H, K, M	B, C, W	H, K	S, T	P, R	DAL,MSI,SOA
M55342^05@301#&	301,000	200 (char. E, H) or 225 (char. K, M)	E, H, K, M	B, C, W	E	S, T	P, R	DAL,MSI,SOA
	Resistance	Power	Char.	Term.	Resistance Tol./	Level 1	Level 2	
Part Number	Value (Ohms)	Rating (mW)	(^)	Type (@)	Multiplier (#)	FRL (&)	FRL (&)	Manufacturer
M55342^05@309#&	309,000	200 (char. E, H) or 225 (char. K, M)	E, H, K, M	B, C, W	E	S, T	P, R	DAL,MSI,SOA
M55342^05@316#&	316,000	200 (char. E, H) or 225 (char. K, M)	E, H, K, M	B, C, W	E	S, T	P, R	DAL,MSI,SOA
M55342^05@324#&	324,000	200 (char. E, H) or 225 (char. K, M)	E, H, K, M	B, C, W	E	S, T	P, R	DAL,MSI,SOA
M55342^05@330#&	330,000	200 (char. E, H) or 225 (char. K, M)	E, H, K, M	B, C, W	H, K, N	S, T	P, R	DAL,MSI,SOA
M55342^05@332#&	332,000	200 (char. E, H) or 225 (char. K, M)	E, H, K, M	B, C, W	E	S, T	P, R	DAL,MSI,SOA
M55342^05@340#&	340,000	200 (char. E, H) or 225 (char. K, M)	E, H, K, M	B, C, W	E	S, T	P, R	DAL,MSI,SOA
M55342^05@348#&	348,000	200 (char. E, H) or 225 (char. K, M)	E, H, K, M	B, C, W	E	S, T	P, R	DAL,MSI,SOA
M55342^05@357#&	357,000	200 (char. E, H) or 225 (char. K, M)	E, H, K, M	B, C, W	E	S, T	P, R	DAL,MSI,SOA
M55342^05@360#&	360,000	200 (char. E, H) or 225 (char. K, M)	E, H, K, M	B, C, W	H, K	S, T	P, R	DAL,MSI,SOA
	Resistance	Power	Char.	Term.	Resistance Tol./	Level 1	Level 2	
Part Number	Value (Ohms)	Rating (mW)	(^)	Type (@)	Multiplier (#)	FRL (&)	FRL (&)	Manufacturer
M55342^05@365#&	365,000	200 (char. E, H) or 225 (char. K, M)	E, H, K, M	B, C, W	E	S, T	P, R	DAL,MSI,SOA
M55342^05@374#&	374,000	200 (char. E, H) or 225 (char. K, M)	E, H, K, M	B, C, W	E	S, T	P, R	DAL,MSI,SOA
M55342^05@383#&	383,000	200 (char. E, H) or 225 (char. K, M)	E, H, K, M	B, C, W	E	S, T	P, R	DAL,MSI,SOA
M55342^05@390#&	390,000	200 (char. E, H) or 225 (char. K, M)	E, H, K, M	B, C, W	H, K, N	S, T	P, R	DAL,MSI,SOA
M55342^05@392#&	392,000	200 (char. E, H) or 225 (char. K, M)	E, H, K, M	B, C, W	E	S, T	P, R	DAL,MSI,SOA
M55342^05@402#&	402,000	200 (char. E, H) or 225 (char. K, M)	E, H, K, M	B, C, W	E	S, T	P, R	DAL,MSI,SOA
M55342^05@412#&	412,000	200 (char. E, H) or 225 (char. K, M)	E, H, K, M	B, C, W	E	S, T	P, R	DAL,MSI,SOA

M55342^05@422#&	422,000	200 (char. E, H) or 225 (char. K, M)	E, H, K, M	B, C, W	E	S, T	P, R	DAL,MSI,SOA
M55342^05@430#&	430,000	200 (char. E, H) or 225 (char. K, M)	E, H, K, M	B, C, W	H, K	S, T	P, R	DAL,MSI,SOA
	Resistance	Power	Char.	Term.	Resistance Tol./	Level 1	Level 2	
Part Number	Value (Ohms)	Rating (mW)	(^)	Type (@)	Multiplier (#)	FRL (&)	FRL (&)	Manufacturer
M55342^05@432#&	432,000	200 (char. E, H) or 225 (char. K, M)	E, H, K, M	B, C, W	E	S, T	P, R	DAL,MSI,SOA
M55342^05@442#&	442,000	200 (char. E, H) or 225 (char. K, M)	E, H, K, M	B, C, W	E	S, T	P, R	DAL,MSI,SOA
M55342^05@453#&	453,000	200 (char. E, H) or 225 (char. K, M)	E, H, K, M	B, C, W	E	S, T	P, R	DAL,MSI,SOA
M55342^05@464#&	464,000	200 (char. E, H) or 225 (char. K, M)	E, H, K, M	B, C, W	E	S, T	P, R	DAL,MSI,SOA
M55342^05@470#&	470,000	200 (char. E, H) or 225 (char. K, M)	E, H, K, M	B, C, W	H, K, N	S, T	P, R	DAL,MSI,SOA
M55342^05@475#&	475,000	200 (char. E, H) or 225 (char. K, M)	E, H, K, M	B, C, W	E	S, T	P, R	DAL,MSI,SOA
M55342^05@487#&	487,000	200 (char. E, H) or 225 (char. K, M)	E, H, K, M	B, C, W	E	S, T	P, R	DAL,MSI,SOA
M55342^05@499#&	499,000	200 (char. E, H) or 225 (char. K, M)	E, H, K, M	B, C, W	E	S, T	P, R	DAL,MSI,SOA
M55342^05@510#&	510,000	200 (char. E, H) or 225 (char. K, M)	E, H, K, M	B, C, W	H, K	S, T	P, R	DAL,MSI,SOA
	Resistance	Power	Char.	Term.	Resistance Tol./	Level 1	Level 2	
Part Number	Value (Ohms)	Rating (mW)	(^)	Type (@)	Multiplier (#)	FRL (&)	FRL (&)	Manufacturer
M55342^05@511#&	511,000	200 (char. E, H) or 225 (char. K, M)	E, H, K, M	B, C, W	E	S, T	P, R	DAL,MSI,SOA
M55342^05@523#&	523,000	200 (char. E, H) or 225 (char. K, M)	E, H, K, M	B, C, W	E	S, T	P, R	DAL,MSI,SOA
M55342^05@536#&	536,000	200 (char. E, H) or 225 (char. K, M)	E, H, K, M	B, C, W	E	S, T	P, R	DAL,MSI,SOA
M55342^05@549#&	549,000	200 (char. E, H) or 225 (char. K, M)	E, H, K, M	B, C, W	E	S, T	P, R	DAL,MSI,SOA
M55342^05@560#&	560,000	200 (char. E, H) or 225 (char. K, M)	E, H, K, M	B, C, W	H, K, N	S, T	P, R	DAL,MSI,SOA
M55342^05@562#&	562,000	200 (char. E, H) or 225 (char. K, M)	E, H, K, M	B, C, W	E	S, T	P, R	DAL,MSI,SOA
M55342^05@576#&	576,000	200 (char. E, H) or 225 (char. K, M)	E, H, K, M	B, C, W	E	S, T	P, R	DAL,MSI,SOA
M55342^05@590#&	590,000	200 (char. E, H) or 225 (char. K, M)	E, H, K, M	B, C, W	E	S, T	P, R	DAL,MSI,SOA
M55342^05@604#&	604,000	200 (char. E, H) or 225 (char. K, M)	E, H, K, M	B, C, W	E	S, T	P, R	DAL,MSI,SOA
	Resistance	Power	Char.	Term.	Resistance Tol./	Level 1	Level 2	
Part Number	Value (Ohms)	Rating (mW)	(^)	Type (@)	Multiplier (#)	FRL (&)	FRL (&)	Manufacturer
M55342^05@619#&	619,000	200 (char. E, H) or 225 (char. K, M)	E, H, K, M	B, C, W	E	S, T	P, R	DAL,MSI,SOA
M55342^05@620#&	620,000	200 (char. E, H) or 225 (char. K, M)	E, H, K, M	B, C, W	H, K	S, T	P, R	DAL,MSI,SOA
M55342^05@634#&	634,000	200 (char. E, H) or 225 (char. K, M)	E, H, K, M	B, C, W	E	S, T	P, R	DAL,MSI,SOA
M55342^05@649#&	649,000	200 (char. E, H) or 225 (char. K, M)	E, H, K, M	B, C, W	E	S, T	P, R	DAL,MSI,SOA
M55342^05@665#&	665,000	200 (char. E, H) or 225 (char. K, M)	E, H, K, M	B, C, W	E	S, T	P, R	DAL,MSI,SOA
M55342^05@680#&	680,000	200 (char. E, H) or 225 (char. K, M)	E, H, K, M	B, C, W	H, K, N	S, T	P, R	DAL,MSI,SOA
M55342^05@681#&	681,000	200 (char. E, H) or 225 (char. K, M)	E, H, K, M	B, C, W	E	S, T	P, R	DAL,MSI,SOA
M55342^05@698#&	698,000	200 (char. E, H) or 225 (char. K, M)	E, H, K, M	B, C, W	E	S, T	P, R	DAL,MSI,SOA
M55342^05@715#&	715,000	200 (char. E, H) or 225 (char. K, M)	E, H, K, M	B, C, W	E	S, T	P, R	DAL,MSI,SOA
	Resistance	Power	Char.	Term.	Resistance Tol./	Level 1	Level 2	
Part Number	Value (Ohms)	Rating (mW)	(^)	Type (@)	Multiplier (#)	FRL (&)	FRL (&)	Manufacturer
M55342^05@732#&	732,000	200 (char. E, H) or 225 (char. K, M)	E, H, K, M	B, C, W	E	S, T	P, R	DAL,MSI,SOA
M55342^05@750#&	750,000	200 (char. E, H) or 225 (char. K, M)	E, H, K, M	B, C, W	E, H, K	S, T	P, R	DAL,MSI,SOA
M55342^05@768#&	768,000	200 (char. E, H) or 225 (char. K, M)	E, H, K, M	B, C, W	E	S, T	P, R	DAL,MSI,SOA
M55342^05@787#&	787,000	200 (char. E, H) or 225 (char. K, M)	E, H, K, M	B, C, W	E	S, T	P, R	DAL,MSI,SOA
M55342^05@806#&	806,000	200 (char. E, H) or 225 (char. K, M)	E, H, K, M	B, C, W	E	S, T	P, R	DAL,MSI,SOA
M55342^05@820#&	820,000	200 (char. E, H) or 225 (char. K, M)	E, H, K, M	B, C, W	H, K, N	S, T	P, R	DAL,MSI,SOA
M55342^05@825#&	825,000	200 (char. E, H) or 225 (char. K, M)	E, H, K, M	B, C, W	E	S, T	P, R	DAL,MSI,SOA
M55342^05@845#&	845,000	200 (char. E, H) or 225 (char. K, M)	E, H, K, M	B, C, W	E	S, T	P, R	DAL,MSI,SOA
M55342^05@866#&	866,000	200 (char. E, H) or 225 (char. K, M)	E, H, K, M	B, C, W	E	S, T	P, R	DAL,MSI,SOA
	Resistance	Power	Char.	Term.	Resistance Tol./	Level 1	Level 2	

Part Number	Value (Ohms)	Rating (mW)	(^)	Type (@)	Multiplier (#)	FRL (&)	FRL (&)	Manufacturer
M55342^05@887#&	887,000	200 (char. E, H) or 225 (char. K, M)	E, H, K, M	B, C, W	E	S, T	P, R	DAL,MSI,SOA
M55342^05@909#&	909,000	200 (char. E, H) or 225 (char. K, M)	E, H, K, M	B, C, W	E	S, T	P, R	DAL,MSI,SOA
M55342^05@910#&	910,000	200 (char. E, H) or 225 (char. K, M)	E, H, K, M	B, C, W	H, K	S, T	P, R	DAL,MSI,SOA
M55342^05@931#&	931,000	200 (char. E, H) or 225 (char. K, M)	E, H, K, M	B, C, W	E	S, T	P, R	DAL,MSI,SOA
M55342^05@953#&	953,000	200 (char. E, H) or 225 (char. K, M)	E, H, K, M	B, C, W	E	S, T	P, R	DAL,MSI,SOA
M55342^05@976#&	976,000	200 (char. E, H) or 225 (char. K, M)	E, H, K, M	B, C, W	E	S, T	P, R	DAL,MSI,SOA
	Resistance	Power	Char.	Term.	Resistance Tol./	Level 1	Level 2	
Part Number	Value (Ohms)	Rating (mW)	(^)	Type (@)	Multiplier (#)	FRL (&)	FRL (&)	Manufacturer

MIL-PRF-55342/5 (RM2208) Film Chip Resistors: 1,000,000 Ohms Through 9,760,000 Ohms

	Resistance	Power	Char.	Term.	Resistance Tol./	Level 1	Level 2	
Part Number	Value (Ohms)	Rating (mW)	(^)	Type (@)	Multiplier (#)	FRL (&)	FRL (&)	Manufacturer
M55342^05@1#00&	1,000,000	200 (char. E, H) or 225 (char. K, M)	E, H, K, M	B, C, W	F, T, L, P	S, T	P, R	DAL,MSI,SOA
M55342^05@1#02&	1,020,000	200 (char. E, H) or 225 (char. K, M)	E, H, K, M	B, C, W	F	S, T	P, R	DAL,SOA
M55342^05@1#05&	1,050,000	200 (char. E, H) or 225 (char. K, M)	E, H, K, M	B, C, W	F	S, T	P, R	DAL,SOA
M55342^05@1#07&	1,070,000	200 (char. E, H) or 225 (char. K, M)	E, H, K, M	B, C, W	F	S, T	P, R	DAL,SOA
M55342^05@1#10&	1,100,000	200 (char. E, H) or 225 (char. K, M)	E, H, K, M	B, C, W	F, T, L	S, T	P, R	DAL,SOA
M55342^05@1#13&	1,130,000	200 (char. E, H) or 225 (char. K, M)	E, H, K, M	B, C, W	F	S, T	P, R	DAL,SOA
M55342^05@1#15&	1,150,000	200 (char. E, H) or 225 (char. K, M)	E, H, K, M	B, C, W	F	S, T	P, R	DAL,SOA
M55342^05@1#18&	1,180,000	200 (char. E, H) or 225 (char. K, M)	E, H, K, M	B, C, W	F	S, T	P, R	DAL,SOA
M55342^05@1#20&	1,200,000	200 (char. E, H) or 225 (char. K, M)	E, H, K, M	B, C, W	T, L, P	S, T	P, R	DAL,SOA
	Resistance	Power	Char.	Term.	Resistance Tol./	Level 1	Level 2	
Part Number	Value (Ohms)	Rating (mW)	(^)	Type (@)	Multiplier (#)	FRL (&)	FRL (&)	Manufacturer
M55342^05@1#21&	1,210,000	200 (char. E, H) or 225 (char. K, M)	E, H, K, M	B, C, W	F	S, T	P, R	DAL,SOA
M55342^05@1#24&	1,240,000	200 (char. E, H) or 225 (char. K, M)	E, H, K, M	B, C, W	F	S, T	P, R	DAL,SOA
M55342^05@1#27&	1,270,000	200 (char. E, H) or 225 (char. K, M)	E, H, K, M	B, C, W	F	S, T	P, R	DAL,SOA
M55342^05@1#30&	1,300,000	200 (char. E, H) or 225 (char. K, M)	E, H, K, M	B, C, W	F, T, L	S, T	P, R	DAL,SOA
M55342^05@1#33&	1,330,000	200 (char. E, H) or 225 (char. K, M)	E, H, K, M	B, C, W	F	S, T	P, R	DAL,SOA
M55342^05@1#37&	1,370,000	200 (char. E, H) or 225 (char. K, M)	E, H, K, M	B, C, W	F	S, T	P, R	DAL,SOA
M55342^05@1#40&	1,400,000	200 (char. E, H) or 225 (char. K, M)	E, H, K, M	B, C, W	F	S, T	P, R	DAL,SOA
M55342^05@1#43&	1,430,000	200 (char. E, H) or 225 (char. K, M)	E, H, K, M	B, C, W	F	S, T	P, R	DAL,SOA
M55342^05@1#47&	1,470,000	200 (char. E, H) or 225 (char. K, M)	E, H, K, M	B, C, W	F	S, T	P, R	DAL,SOA
	Resistance	Power	Char.	Term.	Resistance Tol./	Level 1	Level 2	
Part Number	Value (Ohms)	Rating (mW)	(^)	Type (@)	Multiplier (#)	FRL (&)	FRL (&)	Manufacturer
M55342^05@1#50&	1,500,000	200 (char. E, H) or 225 (char. K, M)	E, H, K, M	B, C, W	F, T, L, P	S, T	P, R	DAL,SOA
M55342^05@1#54&	1,540,000	200 (char. E, H) or 225 (char. K, M)	E, H, K, M	B, C, W	F	S, T	P, R	DAL,SOA
M55342^05@1#58&	1,580,000	200 (char. E, H) or 225 (char. K, M)	E, H, K, M	B, C, W	F	S, T	P, R	DAL,SOA
M55342^05@1#60&	1,600,000	200 (char. E, H) or 225 (char. K, M)	E, H, K, M	B, C, W	T, L	S, T	P, R	DAL,SOA
M55342^05@1#62&	1,620,000	200 (char. E, H) or 225 (char. K, M)	E, H, K, M	B, C, W	F	S, T	P, R	DAL,SOA
M55342^05@1#65&	1,650,000	200 (char. E, H) or 225 (char. K, M)	E, H, K, M	B, C, W	F	S, T	P, R	DAL,SOA
M55342^05@1#69&	1,690,000	200 (char. E, H) or 225 (char. K, M)	E, H, K, M	B, C, W	F	S, T	P, R	DAL,SOA
M55342^05@1#74&	1,740,000	200 (char. E, H) or 225 (char. K, M)	E, H, K, M	B, C, W	F	S, T	P, R	DAL,SOA
M55342^05@1#78&	1,780,000	200 (char. E, H) or 225 (char. K, M)	E, H, K, M	B, C, W	F	S, T	P, R	DAL,SOA

	Resistance	Power	Char.	Term.	Resistance Tol./	Level 1	Level 2	
Part Number	Value (Ohms)	Rating (mW)	(^)	Type (@)	Multiplier (#)	FRL (&)	FRL (&)	Manufacturer
M55342^05@1#80&	1,800,000	200 (char. E, H) or 225 (char. K, M)	E, H, K, M	B, C, W	T, L, P	S, T	P, R	DAL,SOA
M55342^05@1#82&	1,820,000	200 (char. E, H) or 225 (char. K, M)	E, H, K, M	B, C, W	F	S, T	P, R	DAL,SOA
M55342^05@1#87&	1,870,000	200 (char. E, H) or 225 (char. K, M)	E, H, K, M	B, C, W	F	S, T	P, R	DAL,SOA
M55342^05@1#91&	1,910,000	200 (char. E, H) or 225 (char. K, M)	E, H, K, M	B, C, W	F	S, T	P, R	DAL,SOA
M55342^05@1#96&	1,960,000	200 (char. E, H) or 225 (char. K, M)	E, H, K, M	B, C, W	F	S, T	P, R	DAL,SOA
M55342^05@2#00&	2,000,000	200 (char. E, H) or 225 (char. K, M)	E, H, K, M	B, C, W	F, T, L, P	S, T	P, R	DAL,SOA
M55342^05@2#05&	2,050,000	200 (char. E, H) or 225 (char. K, M)	E, H, K, M	B, C, W	F	S, T	P, R	DAL,SOA
M55342^05@2#10&	2,100,000	200 (char. E, H) or 225 (char. K, M)	E, H, K, M	B, C, W	F	S, T	P, R	DAL,SOA
M55342^05@2#15&	2,150,000	200 (char. E, H) or 225 (char. K, M)	E, H, K, M	B, C, W	F	S, T	P, R	DAL,SOA
	Resistance	Power	Char.	Term.	Resistance Tol./	Level 1	Level 2	
Part Number	Value (Ohms)	Rating (mW)	(^)	Type (@)	Multiplier (#)	FRL (&)	FRL (&)	Manufacturer
M55342^05@2#20&	2,200,000	200 (char. E, H) or 225 (char. K, M)	E, H, K, M	B, C, W	T, L, P	S, T	P, R	DAL,SOA
M55342^05@2#21&	2,210,000	200 (char. E, H) or 225 (char. K, M)	E, H, K, M	B, C, W	F	S, T	P, R	DAL,SOA
M55342^05@2#26&	2,260,000	200 (char. E, H) or 225 (char. K, M)	E, H, K, M	B, C, W	F	S, T	P, R	DAL,SOA
M55342^05@2#32&	2,320,000	200 (char. E, H) or 225 (char. K, M)	E, H, K, M	B, C, W	F	S, T	P, R	DAL,SOA
M55342^05@2#37&	2,370,000	200 (char. E, H) or 225 (char. K, M)	E, H, K, M	B, C, W	F	S, T	P, R	DAL,SOA
M55342^05@2#40&	2,400,000	200 (char. E, H) or 225 (char. K, M)	E, H, K, M	B, C, W	T, L	S, T	P, R	DAL,SOA
M55342^05@2#43&	2,430,000	200 (char. E, H) or 225 (char. K, M)	E, H, K, M	B, C, W	F	S, T	P, R	DAL,SOA
M55342^05@2#49&	2,490,000	200 (char. E, H) or 225 (char. K, M)	E, H, K, M	B, C, W	F	S, T	P, R	DAL,SOA
M55342^05@2#55&	2,550,000	200 (char. E, H) or 225 (char. K, M)	E, H, K, M	B, C, W	F	S, T	P, R	DAL,SOA
	Resistance	Power	Char.	Term.	Resistance Tol./	Level 1	Level 2	
Part Number	Value (Ohms)	Rating (mW)	(^)	Type (@)	Multiplier (#)	FRL (&)	FRL (&)	Manufacturer
M55342^05@2#61&	2,610,000	200 (char. E, H) or 225 (char. K, M)	E, H, K, M	B, C, W	F	S, T	P, R	DAL,SOA
M55342^05@2#67&	2,670,000	200 (char. E, H) or 225 (char. K, M)	E, H, K, M	B, C, W	F	S, T	P, R	DAL,SOA
M55342^05@2#70&	2,700,000	200 (char. E, H) or 225 (char. K, M)	E, H, K, M	B, C, W	T, L, P	S, T	P, R	DAL,SOA
M55342^05@2#74&	2,740,000	200 (char. E, H) or 225 (char. K, M)	E, H, K, M	B, C, W	F	S, T	P, R	DAL,SOA
M55342^05@2#80&	2,800,000	200 (char. E, H) or 225 (char. K, M)	E, H, K, M	B, C, W	F	S, T	P, R	DAL,SOA
M55342^05@2#87&	2,870,000	200 (char. E, H) or 225 (char. K, M)	E, H, K, M	B, C, W	F	S, T	P, R	DAL,SOA
M55342^05@2#94&	2,940,000	200 (char. E, H) or 225 (char. K, M)	E, H, K, M	B, C, W	F	S, T	P, R	DAL,SOA
M55342^05@3#00&	3,000,000	200 (char. E, H) or 225 (char. K, M)	E, H, K, M	B, C, W	T, L	S, T	P, R	DAL,SOA
M55342^05@3#01&	3,010,000	200 (char. E, H) or 225 (char. K, M)	E, H, K, M	B, C, W	F	S, T	P, R	DAL,SOA
	Resistance	Power	Char.	Term.	Resistance Tol./	Level 1	Level 2	
Part Number	Value (Ohms)	Rating (mW)	(^)	Type (@)	Multiplier (#)	FRL (&)	FRL (&)	Manufacturer
M55342^05@3#09&	3,090,000	200 (char. E, H) or 225 (char. K, M)	E, H, K, M	B, C, W	F	S, T	P, R	DAL,SOA
M55342^05@3#16&	3,160,000	200 (char. E, H) or 225 (char. K, M)	E, H, K, M	B, C, W	F	S, T	P, R	DAL,SOA
M55342^05@3#24&	3,240,000	200 (char. E, H) or 225 (char. K, M)	E, H, K, M	B, C, W	F	S, T	P, R	DAL,SOA
M55342^05@3#30&	3,300,000	200 (char. E, H) or 225 (char. K, M)	E, H, K, M	B, C, W	T, L, P	S, T	P, R	DAL,SOA
M55342^05@3#32&	3,320,000	200 (char. E, H) or 225 (char. K, M)	E, H, K, M	B, C, W	F	S, T	P, R	DAL,SOA
M55342^05@3#40&	3,400,000	200 (char. E, H) or 225 (char. K, M)	E, H, K, M	B, C, W	F	S, T	P, R	DAL,SOA
M55342^05@3#48&	3,480,000	200 (char. E, H) or 225 (char. K, M)	E, H, K, M	B, C, W	F	S, T	P, R	DAL,SOA
M55342^05@3#57&	3,570,000	200 (char. E, H) or 225 (char. K, M)	E, H, K, M	B, C, W	F	S, T	P, R	DAL,SOA
M55342^05@3#60&	3,600,000	200 (char. E, H) or 225 (char. K, M)	E, H, K, M	B, C, W	T, L	S, T	P, R	DAL,SOA
	Resistance	Power	Char.	Term.	Resistance Tol./	Level 1	Level 2	
Part Number	Value (Ohms)	Rating (mW)	(^)	Type (@)	Multiplier (#)	FRL (&)	FRL (&)	Manufacturer
M55342^05@3#65&	3,650,000	200 (char. E, H) or 225 (char. K, M)	E, H, K, M	B, C, W	F	S, T	P, R	DAL,SOA

M55342^05@3#74&	3,740,000	200 (char. E, H) or 225 (char. K, M)	E, H, K, M	B, C, W	F	S, T	P, R	DAL,SOA
M55342^05@3#83&	3,830,000	200 (char. E, H) or 225 (char. K, M)	E, H, K, M	B, C, W	F	S, T	P, R	DAL,SOA
M55342^05@3#90&	3,900,000	200 (char. E, H) or 225 (char. K, M)	E, H, K, M	B, C, W	T, L, P	S, T	P, R	DAL,SOA
M55342^05@3#92&	3,920,000	200 (char. E, H) or 225 (char. K, M)	E, H, K, M	B, C, W	F	S, T	P, R	DAL,SOA
M55342^05@4#02&	4,020,000	200 (char. E, H) or 225 (char. K, M)	E, H, K, M	B, C, W	F	S, T	P, R	DAL,SOA
M55342^05@4#12&	4,120,000	200 (char. E, H) or 225 (char. K, M)	E, H, K, M	B, C, W	F	S, T	P, R	DAL,SOA
M55342^05@4#22&	4,220,000	200 (char. E, H) or 225 (char. K, M)	E, H, K, M	B, C, W	F	S, T	P, R	DAL,SOA
M55342^05@4#30&	4,300,000	200 (char. E, H) or 225 (char. K, M)	E, H, K, M	B, C, W	T, L	S, T	P, R	DAL,SOA
	Resistance	Power	Char.	Term.	Resistance Tol./	Level 1	Level 2	
Part Number	Value (Ohms)	Rating (mW)	(^)	Type (@)	Multiplier (#)	FRL (&)	FRL (&)	Manufacturer
M55342^05@4#32&	4,320,000	200 (char. E, H) or 225 (char. K, M)	E, H, K, M	B, C, W	F	S, T	P, R	DAL,SOA
M55342^05@4#42&	4,420,000	200 (char. E, H) or 225 (char. K, M)	E, H, K, M	B, C, W	F	S, T	P, R	DAL,SOA
M55342^05@4#53&	4,530,000	200 (char. E, H) or 225 (char. K, M)	E, H, K, M	B, C, W	F	S, T	P, R	DAL,SOA
M55342^05@4#64&	4,640,000	200 (char. E, H) or 225 (char. K, M)	E, H, K, M	B, C, W	F	S, T	P, R	DAL,SOA
M55342^05@4#70&	4,700,000	200 (char. E, H) or 225 (char. K, M)	E, H, K, M	B, C, W	T, L, P	S, T	P, R	DAL,SOA
M55342^05@4#75&	4,750,000	200 (char. E, H) or 225 (char. K, M)	E, H, K, M	B, C, W	F	S, T	P, R	DAL,SOA
M55342^05@4#87&	4,870,000	200 (char. E, H) or 225 (char. K, M)	E, H, K, M	B, C, W	F	S, T	P, R	DAL,SOA
M55342^05@4#99&	4,990,000	200 (char. E, H) or 225 (char. K, M)	E, H, K, M	B, C, W	F	S, T	P, R	DAL,SOA
M55342^05@5#10&	5,100,000	200 (char. E, H) or 225 (char. K, M)	E, H, K, M	B, C, W	T, L	S, T	P, R	DAL,SOA
	Resistance	Power	Char.	Term.	Resistance Tol./	Level 1	Level 2	
Part Number	Value (Ohms)	Rating (mW)	(^)	Type (@)	Multiplier (#)	FRL (&)	FRL (&)	Manufacturer
M55342^05@5#11&	5,110,000	200 (char. E, H) or 225 (char. K, M)	E, H, K, M	B, C, W	F	S, T	P, R	DAL,SOA
M55342^05@5#23&	5,230,000	200 (char. E, H) or 225 (char. K, M)	E, H, K, M	B, C, W	F	S, T	P, R	DAL,SOA
M55342^05@5#36&	5,360,000	200 (char. E, H) or 225 (char. K, M)	E, H, K, M	B, C, W	F	S, T	P, R	DAL,SOA
M55342^05@5#49&	5,490,000	200 (char. E, H) or 225 (char. K, M)	E, H, K, M	B, C, W	F	S, T	P, R	DAL,SOA
M55342^05@5#60&	5,600,000	200 (char. E, H) or 225 (char. K, M)	E, H, K, M	B, C, W	T, L, P	S, T	P, R	DAL,SOA
M55342^05@5#62&	5,620,000	200 (char. E, H) or 225 (char. K, M)	E, H, K, M	B, C, W	F	S, T	P, R	DAL,SOA
M55342^05@5#76&	5,760,000	200 (char. E, H) or 225 (char. K, M)	E, H, K, M	B, C, W	F	S, T	P, R	DAL,SOA
M55342^05@5#90&	5,900,000	200 (char. E, H) or 225 (char. K, M)	E, H, K, M	B, C, W	F	S, T	P, R	DAL,SOA
M55342^05@6#04&	6,040,000	200 (char. E, H) or 225 (char. K, M)	E, H, K, M	B, C, W	F	S, T	P, R	DAL,SOA
	Resistance	Power	Char.	Term.	Resistance Tol./	Level 1	Level 2	
Part Number	Value (Ohms)	Rating (mW)	(^)	Type (@)	Multiplier (#)	FRL (&)	FRL (&)	Manufacturer
M55342^05@6#19&	6,190,000	200 (char. E, H) or 225 (char. K, M)	E, H, K, M	B, C, W	F	S, T	P, R	DAL,SOA
M55342^05@6#20&	6,200,000	200 (char. E, H) or 225 (char. K, M)	E, H, K, M	B, C, W	T, L	S, T	P, R	DAL,SOA
M55342^05@6#34&	6,340,000	200 (char. E, H) or 225 (char. K, M)	E, H, K, M	B, C, W	F	S, T	P, R	DAL,SOA
M55342^05@6#49&	6,490,000	200 (char. E, H) or 225 (char. K, M)	E, H, K, M	B, C, W	F	S, T	P, R	DAL,SOA
M55342^05@6#65&	6,650,000	200 (char. E, H) or 225 (char. K, M)	E, H, K, M	B, C, W	F	S, T	P, R	DAL,SOA
M55342^05@6#80&	6,800,000	200 (char. E, H) or 225 (char. K, M)	E, H, K, M	B, C, W	T, L, P	S, T	P, R	DAL,SOA
M55342^05@6#81&	6,810,000	200 (char. E, H) or 225 (char. K, M)	E, H, K, M	B, C, W	F	S, T	P, R	DAL,SOA
M55342^05@6#98&	6,980,000	200 (char. E, H) or 225 (char. K, M)	E, H, K, M	B, C, W	F	S, T	P, R	DAL,SOA
M55342^05@7#15&	7,150,000	200 (char. E, H) or 225 (char. K, M)	E, H, K, M	B, C, W	F	S, T	P, R	DAL,SOA
	Resistance	Power	Char.	Term.	Resistance Tol./	Level 1	Level 2	
Part Number	Value (Ohms)	Rating (mW)	(^)	Type (@)	Multiplier (#)	FRL (&)	FRL (&)	Manufacturer
M55342^05@7#32&	7,320,000	200 (char. E, H) or 225 (char. K, M)	E, H, K, M	B, C, W	F	S, T	P, R	DAL,SOA
M55342^05@7#50&	7,500,000	200 (char. E, H) or 225 (char. K, M)	E, H, K, M	B, C, W	F, T, L	S, T	P, R	DAL,SOA
M55342^05@7#68&	7,680,000	200 (char. E, H) or 225 (char. K, M)	E, H, K, M	B, C, W	F	S, T	P, R	DAL,SOA
M55342^05@7#87&	7,870,000	200 (char. E, H) or 225 (char. K, M)	E, H, K, M	B, C, W	F	S, T	P, R	DAL,SOA

M55342^05@8#06&	8,060,000	200 (char. E, H) or 225 (char. K, M)	E, H, K, M	B, C, W	F	S, T	P, R	DAL,SOA
M55342^05@8#20&	8,200,000	200 (char. E, H) or 225 (char. K, M)	E, H, K, M	B, C, W	T, L, P	S, T	P, R	DAL,SOA
M55342^05@8#25&	8,250,000	200 (char. E, H) or 225 (char. K, M)	E, H, K, M	B, C, W	F	S, T	P, R	DAL,SOA
M55342^05@8#45&	8,450,000	200 (char. E, H) or 225 (char. K, M)	E, H, K, M	B, C, W	F	S, T	P, R	DAL,SOA
M55342^05@8#66&	8,660,000	200 (char. E, H) or 225 (char. K, M)	E, H, K, M	B, C, W	F	S, T	P, R	DAL,SOA
	Resistance	Power	Char.	Term.	Resistance Tol./	Level 1	Level 2	
Part Number	Value (Ohms)	Rating (mW)	(^)	Type (@)	Multiplier (#)	FRL (&)	FRL (&)	Manufacturer
M55342^05@8#87&	8,870,000	200 (char. E, H) or 225 (char. K, M)	E, H, K, M	B, C, W	F	S, T	P, R	DAL,SOA
M55342^05@9#09&	9,090,000	200 (char. E, H) or 225 (char. K, M)	E, H, K, M	B, C, W	F	S, T	P, R	DAL,SOA
M55342^05@9#10&	9,100,000	200 (char. E, H) or 225 (char. K, M)	E, H, K, M	B, C, W	T, L	S, T	P, R	DAL,SOA
M55342^05@9#31&	9,310,000	200 (char. E, H) or 225 (char. K, M)	E, H, K, M	B, C, W	F	S, T	P, R	DAL,SOA
M55342^05@9#53&	9,530,000	200 (char. E, H) or 225 (char. K, M)	E, H, K, M	B, C, W	F	S, T	P, R	DAL,SOA
M55342^05@9#76&	9,760,000	200 (char. E, H) or 225 (char. K, M)	E, H, K, M	B, C, W	F	S, T	P, R	DAL,SOA
	Resistance	Power	Char.	Term.	Resistance Tol./	Level 1	Level 2	
Part Number	Value (Ohms)	Rating (mW)	(^)	Type (@)	Multiplier (#)	FRL (&)	FRL (&)	Manufacturer

MIL-PRF-55342/5 (RM2208) Film Chip Resistors: 10,000,000 Ohms Through 15,000,000 Ohms

	Resistance	Power	Char.	Term.	Resistance Tol./	Level 1	Level 2	
Part Number	Value (Ohms)	Rating (mW)	(^)	Type (@)	Multiplier (#)	FRL (&)	FRL (&)	Manufacturer
M55342^05@10#0&	10,000,000	200 (char. E, H) or 225 (char. K, M)	E, H, K, M	B, C, W	T, L, P	S, T	P, R	DAL,SOA
M55342^05@10#2&	10,200,000	200 (char. E, H) or 225 (char. K, M)	E, H, K, M	B, C, W	F	S, T	P, R	DAL,SOA
M55342^05@10#5&	10,500,000	200 (char. E, H) or 225 (char. K, M)	E, H, K, M	B, C, W	F	S, T	P, R	DAL,SOA
M55342^05@10#7&	10,700,000	200 (char. E, H) or 225 (char. K, M)	E, H, K, M	B, C, W	F	S, T	P, R	DAL,SOA
M55342^05@11#0&	11,000,000	200 (char. E, H) or 225 (char. K, M)	E, H, K, M	B, C, W	T, L	S, T	P, R	DAL,SOA
M55342^05@11#3&	11,300,000	200 (char. E, H) or 225 (char. K, M)	E, H, K, M	B, C, W	F	S, T	P, R	DAL,SOA
M55342^05@11#5&	11,500,000	200 (char. E, H) or 225 (char. K, M)	E, H, K, M	B, C, W	F	S, T	P, R	DAL,SOA
M55342^05@11#8&	11,800,000	200 (char. E, H) or 225 (char. K, M)	E, H, K, M	B, C, W	F	S, T	P, R	DAL,SOA
M55342^05@12#0&	12,000,000	200 (char. E, H) or 225 (char. K, M)	E, H, K, M	B, C, W	T, L, P	S, T	P, R	DAL,SOA
M55342^05@12#1&	12,100,000	200 (char. E, H) or 225 (char. K, M)	E, H, K, M	B, C, W	F	S, T	P, R	DAL,SOA
	Resistance	Power	Char.	Term.	Resistance Tol./	Level 1	Level 2	
Part Number	Value (Ohms)	Rating (mW)	(^)	Type (@)	Multiplier (#)	FRL (&)	FRL (&)	Manufacturer
M55342^05@12#4&	12,400,000	200 (char. E, H) or 225 (char. K, M)	E, H, K, M	B, C, W	F	S, T	P, R	DAL,SOA
M55342^05@12#7&	12,700,000	200 (char. E, H) or 225 (char. K, M)	E, H, K, M	B, C, W	F	S, T	P, R	DAL,SOA
M55342^05@13#0&	13,000,000	200 (char. E, H) or 225 (char. K, M)	E, H, K, M	B, C, W	T, L	S, T	P, R	DAL,SOA
M55342^05@13#3&	13,300,000	200 (char. E, H) or 225 (char. K, M)	E, H, K, M	B, C, W	F	S, T	P, R	DAL,SOA
M55342^05@13#7&	13,700,000	200 (char. E, H) or 225 (char. K, M)	E, H, K, M	B, C, W	F	S, T	P, R	DAL,SOA
M55342^05@14#0&	14,000,000	200 (char. E, H) or 225 (char. K, M)	E, H, K, M	B, C, W	F	S, T	P, R	DAL,SOA
M55342^05@14#3&	14,300,000	200 (char. E, H) or 225 (char. K, M)	E, H, K, M	B, C, W	F	S, T	P, R	DAL,SOA
M55342^05@14#7&	14,700,000	200 (char. E, H) or 225 (char. K, M)	E, H, K, M	B, C, W	F	S, T	P, R	DAL,SOA
M55342^05@15#0&	15,000,000	200 (char. E, H) or 225 (char. K, M)	E, H, K, M	B, C, W	T, L, P	S, T	P, R	DAL,SOA
	Resistance	Power	Char.	Term.	Resistance Tol./	Level 1	Level 2	
Part Number	Value (Ohms)	Rating (mW)	(^)	Type (@)	Multiplier (#)	FRL (&)	FRL (&)	Manufacturer

	Resistance	Power	Char.	Term.	Res. Tol./	Level 1	Level 2	
Part Number	Value (Ohms)	Rating (mW)	(^)	Type (@)	Multiplier (#)	FRL (&)	FRL (&)	Manufacturer
M55342^09@5#60&	5.60	500 (char. E, H) or 1000 (char. K, M)	E, H, K, M	B, C, W	G, J, M	S	P, R	DAL,MSI,SOA
M55342^09@5#62&	5.62	500 (char. E, H) or 1000 (char. K, M)	E, H, K, M	B, C, W	D	S	P, R	DAL,MSI,SOA
M55342^09@5#76&	5.76	500 (char. E, H) or 1000 (char. K, M)	E, H, K, M	B, C, W	D	S	P, R	DAL,MSI,SOA
M55342^09@5#90&	5.90	500 (char. E, H) or 1000 (char. K, M)	E, H, K, M	B, C, W	D	S	P, R	DAL,MSI,SOA
M55342^09@6#04&	6.04	500 (char. E, H) or 1000 (char. K, M)	E, H, K, M	B, C, W	D	S	P, R	DAL,MSI,SOA
M55342^09@6#19&	6.19	500 (char. E, H) or 1000 (char. K, M)	E, H, K, M	B, C, W	D	S	P, R	DAL,MSI,SOA
M55342^09@6#20&	6.20	500 (char. E, H) or 1000 (char. K, M)	E, H, K, M	B, C, W	G, J	S	P, R	DAL,MSI,SOA
M55342^09@6#34&	6.34	500 (char. E, H) or 1000 (char. K, M)	E, H, K, M	B, C, W	D	S	P, R	DAL,MSI,SOA
M55342^09@6#49&	6.49	500 (char. E, H) or 1000 (char. K, M)	E, H, K, M	B, C, W	D	S	P, R	DAL,MSI,SOA
M55342^09@6#65&	6.65	500 (char. E, H) or 1000 (char. K, M)	E, H, K, M	B, C, W	D	S	P, R	DAL,MSI,SOA
M55342^09@6#80&	6.80	500 (char. E, H) or 1000 (char. K, M)	E, H, K, M	B, C, W	G, J, M	S	P, R	DAL,MSI,SOA
M55342^09@6#81&	6.81	500 (char. E, H) or 1000 (char. K, M)	E, H, K, M	B, C, W	D	S	P, R	DAL,MSI,SOA
M55342^09@6#98&	6.98	500 (char. E, H) or 1000 (char. K, M)	E, H, K, M	B, C, W	D	S	P, R	DAL,MSI,SOA
M55342^09@7#15&	7.15	500 (char. E, H) or 1000 (char. K, M)	E, H, K, M	B, C, W	D	S	P, R	DAL,MSI,SOA
M55342^09@7#32&	7.32	500 (char. E, H) or 1000 (char. K, M)	E, H, K, M	B, C, W	D	S	P, R	DAL,MSI,SOA
M55342^09@7#50&	7.50	500 (char. E, H) or 1000 (char. K, M)	E, H, K, M	B, C, W	D, G, J	S	P, R	DAL,MSI,SOA
M55342^09@7#68&	7.68	500 (char. E, H) or 1000 (char. K, M)	E, H, K, M	B, C, W	D	S	P, R	DAL,MSI,SOA
M55342^09@7#87&	7.87	500 (char. E, H) or 1000 (char. K, M)	E, H, K, M	B, C, W	D	S	P, R	DAL,MSI,SOA
M55342^09@8#06&	8.06	500 (char. E, H) or 1000 (char. K, M)	E, H, K, M	B, C, W	D	S	P, R	DAL,MSI,SOA
M55342^09@8#20&	8.20	500 (char. E, H) or 1000 (char. K, M)	E, H, K, M	B, C, W	G, J, M	S	P, R	DAL,MSI,SOA
M55342^09@8#25&	8.25	500 (char. E, H) or 1000 (char. K, M)	E, H, K, M	B, C, W	D	S	P, R	DAL,MSI,SOA
M55342^09@8#45&	8.45	500 (char. E, H) or 1000 (char. K, M)	E, H, K, M	B, C, W	D	S	P, R	DAL,MSI,SOA
M55342^09@8#66&	8.66	500 (char. E, H) or 1000 (char. K, M)	E, H, K, M	B, C, W	D	S	P, R	DAL,MSI,SOA
M55342^09@8#87&	8.87	500 (char. E, H) or 1000 (char. K, M)	E, H, K, M	B, C, W	D	S	P, R	DAL,MSI,SOA
M55342^09@9#09&	9.09	500 (char. E, H) or 1000 (char. K, M)	E, H, K, M	B, C, W	D	S	P, R	DAL,MSI,SOA
M55342^09@9#10&	9.10	500 (char. E, H) or 1000 (char. K, M)	E, H, K, M	B, C, W	G, J	S	P, R	DAL,MSI,SOA
M55342^09@9#31&	9.31	500 (char. E, H) or 1000 (char. K, M)	E, H, K, M	B, C, W	D	S	P, R	DAL,MSI,SOA
M55342^09@9#53&	9.53	500 (char. E, H) or 1000 (char. K, M)	E, H, K, M	B, C, W	D	S	P, R	DAL,MSI,SOA
M55342^09@9#76&	9.76	500 (char. E, H) or 1000 (char. K, M)	E, H, K, M	B, C, W	D	S	P, R	DAL,MSI,SOA
M55342^09@10#0&	10.0	500 (char. E, H) or 1000 (char. K, M)	E, H, K, M	B, C, W	D, G, J, M	S	P, R	DAL,MSI,SOA
M55342^09@10#2&	10.2	500 (char. E, H) or 1000 (char. K, M)	E, H, K, M	B, C, W	D	S	P, R	DAL,MSI,SOA
M55342^09@10#5&	10.5	500 (char. E, H) or 1000 (char. K, M)	E, H, K, M	B, C, W	D	S	P, R	DAL,MSI,SOA
M55342^09@10#7&	10.7	500 (char. E, H) or 1000 (char. K, M)	E, H, K, M	B, C, W	D	S	P, R	DAL,MSI,SOA
M55342^09@11#0&	11.0	500 (char. E, H) or 1000 (char. K, M)	E, H, K, M	B, C, W	D, G, J	S	P, R	DAL,MSI,SOA
M55342^09@11#3&	11.3	500 (char. E, H) or 1000 (char. K, M)	E, H, K, M	B, C, W	D	S	P, R	DAL,MSI,SOA
M55342^09@11#5&	11.5	500 (char. E, H) or 1000 (char. K, M)	E, H, K, M	B, C, W	D	S	P, R	DAL,MSI,SOA
M55342^09@11#8&	11.8	500 (char. E, H) or 1000 (char. K, M)	E, H, K, M	B, C, W	D	S	P, R	DAL,MSI,SOA
M55342^09@12#0&	12.0	500 (char. E, H) or 1000 (char. K, M)	E, H, K, M	B, C, W	G, J, M	S	P, R	DAL,MSI,SOA
M55342^09@12#1&	12.1	500 (char. E, H) or 1000 (char. K, M)	E, H, K, M	B, C, W	D	S	P, R	DAL,MSI,SOA
M55342^09@12#4&	12.4	500 (char. E, H) or 1000 (char. K, M)	E, H, K, M	B, C, W	D	S	P, R	DAL,MSI,SOA
M55342^09@12#7&	12.7	500 (char. E, H) or 1000 (char. K, M)	E, H, K, M	B, C, W	D	S	P, R	DAL,MSI,SOA

M55342^09@13#0&	13.0	500 (char. E, H) or 1000 (char. K, M)	E, H, K, M	B, C, W	D, G, J	S	P, R	DAL,MSI,SOA
M55342^09@13#3&	13.3	500 (char. E, H) or 1000 (char. K, M)	E, H, K, M	B, C, W	D	S	P, R	DAL,MSI,SOA
M55342^09@13#7&	13.7	500 (char. E, H) or 1000 (char. K, M)	E, H, K, M	B, C, W	D	S	P, R	DAL,MSI,SOA
M55342^09@14#0&	14.0	500 (char. E, H) or 1000 (char. K, M)	E, H, K, M	B, C, W	D	S	P, R	DAL,MSI,SOA
M55342^09@14#3&	14.3	500 (char. E, H) or 1000 (char. K, M)	E, H, K, M	B, C, W	D	S	P, R	DAL,MSI,SOA
M55342^09@14#7&	14.7	500 (char. E, H) or 1000 (char. K, M)	E, H, K, M	B, C, W	D	S	P, R	DAL,MSI,SOA
M55342^09@15#0&	15.0	500 (char. E, H) or 1000 (char. K, M)	E, H, K, M	B, C, W	D, G, J, M	S	P, R	DAL,MSI,SOA
M55342^09@15#4&	15.4	500 (char. E, H) or 1000 (char. K, M)	E, H, K, M	B, C, W	D	S	P, R	DAL,MSI,SOA
M55342^09@15#8&	15.8	500 (char. E, H) or 1000 (char. K, M)	E, H, K, M	B, C, W	D	S	P, R	DAL,MSI,SOA
M55342^09@16#0&	16.0	500 (char. E, H) or 1000 (char. K, M)	E, H, K, M	B, C, W	G, J	S	P, R	DAL,MSI,SOA
M55342^09@16#2&	16.2	500 (char. E, H) or 1000 (char. K, M)	E, H, K, M	B, C, W	D	S	P, R	DAL,MSI,SOA
M55342^09@16#5&	16.5	500 (char. E, H) or 1000 (char. K, M)	E, H, K, M	B, C, W	D	S	P, R	DAL,MSI,SOA
M55342^09@16#9&	16.9	500 (char. E, H) or 1000 (char. K, M)	E, H, K, M	B, C, W	D	S	P, R	DAL,MSI,SOA
M55342^09@17#4&	17.4	500 (char. E, H) or 1000 (char. K, M)	E, H, K, M	B, C, W	D	S	P, R	DAL,MSI,SOA
M55342^09@17#8&	17.8	500 (char. E, H) or 1000 (char. K, M)	E, H, K, M	B, C, W	D	S	P, R	DAL,MSI,SOA
M55342^09@18#0&	18.0	500 (char. E, H) or 1000 (char. K, M)	E, H, K, M	B, C, W	G, J, M	S	P, R	DAL,MSI,SOA
M55342^09@18#2&	18.2	500 (char. E, H) or 1000 (char. K, M)	E, H, K, M	B, C, W	D	S	P, R	DAL,MSI,SOA
M55342^09@18#7&	18.7	500 (char. E, H) or 1000 (char. K, M)	E, H, K, M	B, C, W	D	S	P, R	DAL,MSI,SOA
M55342^09@19#1&	19.1	500 (char. E, H) or 1000 (char. K, M)	E, H, K, M	B, C, W	D	S	P, R	DAL,MSI,SOA
M55342^09@19#6&	19.6	500 (char. E, H) or 1000 (char. K, M)	E, H, K, M	B, C, W	D	S	P, R	DAL,MSI,SOA
M55342^09@20#0&	20.0	500 (char. E, H) or 1000 (char. K, M)	E, H, K, M	B, C, W	D, G, J, M	S	P, R	DAL,MSI,SOA
M55342^09@20#5&	20.5	500 (char. E, H) or 1000 (char. K, M)	E, H, K, M	B, C, W	D	S	P, R	DAL,MSI,SOA
M55342^09@21#0&	21.0	500 (char. E, H) or 1000 (char. K, M)	E, H, K, M	B, C, W	D	S	P, R	DAL,MSI,SOA
M55342^09@21#5&	21.5	500 (char. E, H) or 1000 (char. K, M)	E, H, K, M	B, C, W	D	S	P, R	DAL,MSI,SOA
M55342^09@22#0&	22.0	500 (char. E, H) or 1000 (char. K, M)	E, H, K, M	B, C, W	G, J, M	S	P, R	DAL,MSI,SOA
M55342^09@22#1&	22.1	500 (char. E, H) or 1000 (char. K, M)	E, H, K, M	B, C, W	D	S	P, R	DAL,MSI,SOA
M55342^09@22#6&	22.6	500 (char. E, H) or 1000 (char. K, M)	E, H, K, M	B, C, W	D	S	P, R	DAL,MSI,SOA
M55342^09@23#2&	23.2	500 (char. E, H) or 1000 (char. K, M)	E, H, K, M	B, C, W	D	S	P, R	DAL,MSI,SOA
M55342^09@23#7&	23.7	500 (char. E, H) or 1000 (char. K, M)	E, H, K, M	B, C, W	D	S	P, R	DAL,MSI,SOA
M55342^09@24#0&	24.0	500 (char. E, H) or 1000 (char. K, M)	E, H, K, M	B, C, W	G, J	S	P, R	DAL,MSI,SOA
M55342^09@24#3&	24.3	500 (char. E, H) or 1000 (char. K, M)	E, H, K, M	B, C, W	D	S	P, R	DAL,MSI,SOA
M55342^09@24#9&	24.9	500 (char. E, H) or 1000 (char. K, M)	E, H, K, M	B, C, W	D	S	P, R	DAL,MSI,SOA
M55342^09@25#5&	25.5	500 (char. E, H) or 1000 (char. K, M)	E, H, K, M	B, C, W	D	S	P, R	DAL,MSI,SOA
M55342^09@26#1&	26.1	500 (char. E, H) or 1000 (char. K, M)	E, H, K, M	B, C, W	D	S	P, R	DAL,MSI,SOA
M55342^09@26#7&	26.7	500 (char. E, H) or 1000 (char. K, M)	E, H, K, M	B, C, W	D	S	P, R	DAL,MSI,SOA
M55342^09@27#0&	27.0	500 (char. E, H) or 1000 (char. K, M)	E, H, K, M	B, C, W	G, J, M	S	P, R	DAL,MSI,SOA
M55342^09@27#4&	27.4	500 (char. E, H) or 1000 (char. K, M)	E, H, K, M	B, C, W	D	S	P, R	DAL,MSI,SOA
M55342^09@28#0&	28.0	500 (char. E, H) or 1000 (char. K, M)	E, H, K, M	B, C, W	D	S	P, R	DAL,MSI,SOA
M55342^09@28#7&	28.7	500 (char. E, H) or 1000 (char. K, M)	E, H, K, M	B, C, W	D	S	P, R	DAL,MSI,SOA
M55342^09@29#4&	29.4	500 (char. E, H) or 1000 (char. K, M)	E, H, K, M	B, C, W	D	S	P, R	DAL,MSI,SOA
M55342^09@30#0&	30.0	500 (char. E, H) or 1000 (char. K, M)	E, H, K, M	B, C, W	G, J	S	P, R	DAL,MSI,SOA
M55342^09@30#1&	30.1	500 (char. E, H) or 1000 (char. K, M)	E, H, K, M	B, C, W	D	S	P, R	DAL,MSI,SOA
M55342^09@30#9&	30.9	500 (char. E, H) or 1000 (char. K, M)	E, H, K, M	B, C, W	D	S	P, R	DAL,MSI,SOA
M55342^09@31#6&	31.6	500 (char. E, H) or 1000 (char. K, M)	E, H, K, M	B, C, W	D	S	P, R	DAL,MSI,SOA
M55342^09@32#4&	32.4	500 (char. E, H) or 1000 (char. K, M)	E, H, K, M	B, C, W	D	S	P, R	DAL,MSI,SOA
M55342^09@33#0&	33.0	500 (char. E, H) or 1000 (char. K, M)	E, H, K, M	B, C, W	G, J, M	S	P, R	DAL,MSI,SOA
M55342^09@33#2&	33.2	500 (char. E, H) or 1000 (char. K, M)	E, H, K, M	B, C, W	D	S	P, R	DAL,MSI,SOA

M55342^09@34#0&	34.0	500 (char. E, H) or 1000 (char. K, M)	E, H, K, M	B, C, W	D	S	P, R	DAL,MSI,SOA
M55342^09@34#8&	34.8	500 (char. E, H) or 1000 (char. K, M)	E, H, K, M	B, C, W	D	S	P, R	DAL,MSI,SOA
M55342^09@35#7&	35.7	500 (char. E, H) or 1000 (char. K, M)	E, H, K, M	B, C, W	D	S	P, R	DAL,MSI,SOA
M55342^09@36#0&	36.0	500 (char. E, H) or 1000 (char. K, M)	E, H, K, M	B, C, W	G, J	S	P, R	DAL,MSI,SOA
M55342^09@36#5&	36.5	500 (char. E, H) or 1000 (char. K, M)	E, H, K, M	B, C, W	D	S	P, R	DAL,MSI,SOA
M55342^09@37#4&	37.4	500 (char. E, H) or 1000 (char. K, M)	E, H, K, M	B, C, W	D	S	P, R	DAL,MSI,SOA
M55342^09@38#3&	38.3	500 (char. E, H) or 1000 (char. K, M)	E, H, K, M	B, C, W	D	S	P, R	DAL,MSI,SOA
M55342^09@39#0&	39.0	500 (char. E, H) or 1000 (char. K, M)	E, H, K, M	B, C, W	G, J, M	S	P, R	DAL,MSI,SOA
M55342^09@39#2&	39.2	500 (char. E, H) or 1000 (char. K, M)	E, H, K, M	B, C, W	D	S	P, R	DAL,MSI,SOA
M55342^09@40#2&	40.2	500 (char. E, H) or 1000 (char. K, M)	E, H, K, M	B, C, W	D	S	P, R	DAL,MSI,SOA
M55342^09@41#2&	41.2	500 (char. E, H) or 1000 (char. K, M)	E, H, K, M	B, C, W	D	S	P, R	DAL,MSI,SOA
M55342^09@42#2&	42.2	500 (char. E, H) or 1000 (char. K, M)	E, H, K, M	B, C, W	D	S	P, R	DAL,MSI,SOA
M55342^09@43#0&	43.0	500 (char. E, H) or 1000 (char. K, M)	E, H, K, M	B, C, W	G, J	S	P, R	DAL,MSI,SOA
M55342^09@43#2&	43.2	500 (char. E, H) or 1000 (char. K, M)	E, H, K, M	B, C, W	D	S	P, R	DAL,MSI,SOA
M55342^09@44#2&	44.2	500 (char. E, H) or 1000 (char. K, M)	E, H, K, M	B, C, W	D	S	P, R	DAL,MSI,SOA
M55342^09@45#3&	45.3	500 (char. E, H) or 1000 (char. K, M)	E, H, K, M	B, C, W	D	S	P, R	DAL,MSI,SOA
M55342^09@46#4&	46.4	500 (char. E, H) or 1000 (char. K, M)	E, H, K, M	B, C, W	D	S	P, R	DAL,MSI,SOA
M55342^09@47#0&	47.0	500 (char. E, H) or 1000 (char. K, M)	E, H, K, M	B, C, W	G, J, M	S	P, R	DAL,MSI,SOA
M55342^09@47#5&	47.5	500 (char. E, H) or 1000 (char. K, M)	E, H, K, M	B, C, W	D	S	P, R	DAL,MSI,SOA
M55342^09@48#7&	48.7	500 (char. E, H) or 1000 (char. K, M)	E, H, K, M	B, C, W	D	S	P, R	DAL,MSI,SOA
M55342^09@49#9&	49.9	500 (char. E, H) or 1000 (char. K, M)	E, H, K, M	B, C, W	D	S	P, R	DAL,MSI,SOA
M55342^09@51#0&	51.0	500 (char. E, H) or 1000 (char. K, M)	E, H, K, M	B, C, W	G, J	S	P, R	DAL,MSI,SOA
M55342^09@51#1&	51.1	500 (char. E, H) or 1000 (char. K, M)	E, H, K, M	B, C, W	D	S	P, R	DAL,MSI,SOA
M55342^09@52#3&	52.3	500 (char. E, H) or 1000 (char. K, M)	E, H, K, M	B, C, W	D	S	P, R	DAL,MSI,SOA
M55342^09@53#6&	53.6	500 (char. E, H) or 1000 (char. K, M)	E, H, K, M	B, C, W	D	S	P, R	DAL,MSI,SOA
M55342^09@54#9&	54.9	500 (char. E, H) or 1000 (char. K, M)	E, H, K, M	B, C, W	D	S	P, R	DAL,MSI,SOA
M55342^09@56#0&	56.0	500 (char. E, H) or 1000 (char. K, M)	E, H, K, M	B, C, W	G, J, M	S	P, R	DAL,MSI,SOA
M55342^09@56#2&	56.2	500 (char. E, H) or 1000 (char. K, M)	E, H, K, M	B, C, W	D	S	P, R	DAL,MSI,SOA
M55342^09@57#6&	57.6	500 (char. E, H) or 1000 (char. K, M)	E, H, K, M	B, C, W	D	S	P, R	DAL,MSI,SOA
M55342^09@59#0&	59.0	500 (char. E, H) or 1000 (char. K, M)	E, H, K, M	B, C, W	D	S	P, R	DAL,MSI,SOA
M55342^09@60#4&	60.4	500 (char. E, H) or 1000 (char. K, M)	E, H, K, M	B, C, W	D	S	P, R	DAL,MSI,SOA
M55342^09@61#9&	61.9	500 (char. E, H) or 1000 (char. K, M)	E, H, K, M	B, C, W	D	S	P, R	DAL,MSI,SOA
M55342^09@62#0&	62.0	500 (char. E, H) or 1000 (char. K, M)	E, H, K, M	B, C, W	G, J	S	P, R	DAL,MSI,SOA
M55342^09@63#4&	63.4	500 (char. E, H) or 1000 (char. K, M)	E, H, K, M	B, C, W	D	S	P, R	DAL,MSI,SOA
M55342^09@64#9&	64.9	500 (char. E, H) or 1000 (char. K, M)	E, H, K, M	B, C, W	D	S	P, R	DAL,MSI,SOA
M55342^09@66#5&	66.5	500 (char. E, H) or 1000 (char. K, M)	E, H, K, M	B, C, W	D	S	P, R	DAL,MSI,SOA
M55342^09@68#0&	68.0	500 (char. E, H) or 1000 (char. K, M)	E, H, K, M	B, C, W	G, J, M	S	P, R	DAL,MSI,SOA
M55342^09@68#1&	68.1	500 (char. E, H) or 1000 (char. K, M)	E, H, K, M	B, C, W	D	S	P, R	DAL,MSI,SOA
M55342^09@69#8&	69.8	500 (char. E, H) or 1000 (char. K, M)	E, H, K, M	B, C, W	D	S	P, R	DAL,MSI,SOA
M55342^09@71#5&	71.5	500 (char. E, H) or 1000 (char. K, M)	E, H, K, M	B, C, W	D	S	P, R	DAL,MSI,SOA
M55342^09@73#2&	73.2	500 (char. E, H) or 1000 (char. K, M)	E, H, K, M	B, C, W	D	S	P, R	DAL,MSI,SOA
M55342^09@75#0&	75.0	500 (char. E, H) or 1000 (char. K, M)	E, H, K, M	B, C, W	D, G, J	S	P, R	DAL,MSI,SOA
M55342^09@76#8&	76.8	500 (char. E, H) or 1000 (char. K, M)	E, H, K, M	B, C, W	D	S	P, R	DAL,MSI,SOA
M55342^09@78#7&	78.7	500 (char. E, H) or 1000 (char. K, M)	E, H, K, M	B, C, W	D	S	P, R	DAL,MSI,SOA
M55342^09@80#6&	80.6	500 (char. E, H) or 1000 (char. K, M)	E, H, K, M	B, C, W	D	S	P, R	DAL,MSI,SOA
M55342^09@82#0&	82.0	500 (char. E, H) or 1000 (char. K, M)	E, H, K, M	B, C, W	G, J, M	S	P, R	DAL,MSI,SOA
M55342^09@82#5&	82.5	500 (char. E, H) or 1000 (char. K, M)	E, H, K, M	B, C, W	D	S	P, R	DAL,MSI,SOA

M55342^09@84#5&	84.5	500 (char. E, H) or 1000 (char. K, M)	E, H, K, M	B, C, W	D	S	P, R	DAL,MSI,SOA
M55342^09@86#6&	86.6	500 (char. E, H) or 1000 (char. K, M)	E, H, K, M	B, C, W	D	S	P, R	DAL,MSI,SOA
M55342^09@88#7&	88.7	500 (char. E, H) or 1000 (char. K, M)	E, H, K, M	B, C, W	D	S	P, R	DAL,MSI,SOA
M55342^09@90#9&	90.9	500 (char. E, H) or 1000 (char. K, M)	E, H, K, M	B, C, W	D	S	P, R	DAL,MSI,SOA
M55342^09@91#0&	91.0	500 (char. E, H) or 1000 (char. K, M)	E, H, K, M	B, C, W	G, J	S	P, R	DAL,MSI,SOA
M55342^09@93#1&	93.1	500 (char. E, H) or 1000 (char. K, M)	E, H, K, M	B, C, W	D	S	P, R	DAL,MSI,SOA
M55342^09@95#3&	95.3	500 (char. E, H) or 1000 (char. K, M)	E, H, K, M	B, C, W	D	S	P, R	DAL,MSI,SOA
M55342^09@97#6&	97.6	500 (char. E, H) or 1000 (char. K, M)	E, H, K, M	B, C, W	D	S	P, R	DAL,MSI,SOA
M55342^09@100#&	100	500 (char. E, H) or 1000 (char. K, M)	E, H, K, M	B, C, W	D, G, J, M	S	P, R	DAL,MSI,SOA
M55342^09@102#&	102	500 (char. E, H) or 1000 (char. K, M)	E, H, K, M	B, C, W	D	S	P, R	DAL,MSI,SOA
M55342^09@105#&	105	500 (char. E, H) or 1000 (char. K, M)	E, H, K, M	B, C, W	D	S	P, R	DAL,MSI,SOA
M55342^09@107#&	107	500 (char. E, H) or 1000 (char. K, M)	E, H, K, M	B, C, W	D	S	P, R	DAL,MSI,SOA
M55342^09@110#&	110	500 (char. E, H) or 1000 (char. K, M)	E, H, K, M	B, C, W	D, G, J	S	P, R	DAL,MSI,SOA
M55342^09@113#&	113	500 (char. E, H) or 1000 (char. K, M)	E, H, K, M	B, C, W	D	S	P, R	DAL,MSI,SOA
M55342^09@115#&	115	500 (char. E, H) or 1000 (char. K, M)	E, H, K, M	B, C, W	D	S	P, R	DAL,MSI,SOA
M55342^09@118#&	118	500 (char. E, H) or 1000 (char. K, M)	E, H, K, M	B, C, W	D	S	P, R	DAL,MSI,SOA
M55342^09@120#&	120	500 (char. E, H) or 1000 (char. K, M)	E, H, K, M	B, C, W	G, J, M	S	P, R	DAL,MSI,SOA
M55342^09@121#&	121	500 (char. E, H) or 1000 (char. K, M)	E, H, K, M	B, C, W	D	S	P, R	DAL,MSI,SOA
M55342^09@124#&	124	500 (char. E, H) or 1000 (char. K, M)	E, H, K, M	B, C, W	D	S	P, R	DAL,MSI,SOA
M55342^09@127#&	127	500 (char. E, H) or 1000 (char. K, M)	E, H, K, M	B, C, W	D	S	P, R	DAL,MSI,SOA
M55342^09@130#&	130	500 (char. E, H) or 1000 (char. K, M)	E, H, K, M	B, C, W	D, G, J	S	P, R	DAL,MSI,SOA
M55342^09@133#&	133	500 (char. E, H) or 1000 (char. K, M)	E, H, K, M	B, C, W	D	S	P, R	DAL,MSI,SOA
M55342^09@137#&	137	500 (char. E, H) or 1000 (char. K, M)	E, H, K, M	B, C, W	D	S	P, R	DAL,MSI,SOA
M55342^09@140#&	140	500 (char. E, H) or 1000 (char. K, M)	E, H, K, M	B, C, W	D	S	P, R	DAL,MSI,SOA
M55342^09@143#&	143	500 (char. E, H) or 1000 (char. K, M)	E, H, K, M	B, C, W	D	S	P, R	DAL,MSI,SOA
M55342^09@147#&	147	500 (char. E, H) or 1000 (char. K, M)	E, H, K, M	B, C, W	D	S	P, R	DAL,MSI,SOA
M55342^09@150#&	150	500 (char. E, H) or 1000 (char. K, M)	E, H, K, M	B, C, W	D, G, J, M	S	P, R	DAL,MSI,SOA
M55342^09@154#&	154	500 (char. E, H) or 1000 (char. K, M)	E, H, K, M	B, C, W	D	S	P, R	DAL,MSI,SOA
M55342^09@158#&	158	500 (char. E, H) or 1000 (char. K, M)	E, H, K, M	B, C, W	D	S	P, R	DAL,MSI,SOA
M55342^09@160#&	160	500 (char. E, H) or 1000 (char. K, M)	E, H, K, M	B, C, W	G, J	S	P, R	DAL,MSI,SOA
M55342^09@162#&	162	500 (char. E, H) or 1000 (char. K, M)	E, H, K, M	B, C, W	D	S	P, R	DAL,MSI,SOA
M55342^09@165#&	165	500 (char. E, H) or 1000 (char. K, M)	E, H, K, M	B, C, W	D	S	P, R	DAL,MSI,SOA
M55342^09@169#&	169	500 (char. E, H) or 1000 (char. K, M)	E, H, K, M	B, C, W	D	S	P, R	DAL,MSI,SOA
M55342^09@174#&	174	500 (char. E, H) or 1000 (char. K, M)	E, H, K, M	B, C, W	D	S	P, R	DAL,MSI,SOA
M55342^09@178#&	178	500 (char. E, H) or 1000 (char. K, M)	E, H, K, M	B, C, W	D	S	P, R	DAL,MSI,SOA
M55342^09@180#&	180	500 (char. E, H) or 1000 (char. K, M)	E, H, K, M	B, C, W	G, J, M	S	P, R	DAL,MSI,SOA
M55342^09@182#&	182	500 (char. E, H) or 1000 (char. K, M)	E, H, K, M	B, C, W	D	S	P, R	DAL,MSI,SOA
M55342^09@187#&	187	500 (char. E, H) or 1000 (char. K, M)	E, H, K, M	B, C, W	D	S	P, R	DAL,MSI,SOA
M55342^09@191#&	191	500 (char. E, H) or 1000 (char. K, M)	E, H, K, M	B, C, W	D	S	P, R	DAL,MSI,SOA
M55342^09@196#&	196	500 (char. E, H) or 1000 (char. K, M)	E, H, K, M	B, C, W	D	S	P, R	DAL,MSI,SOA
M55342^09@200#&	200	500 (char. E, H) or 1000 (char. K, M)	E, H, K, M	B, C, W	D, G, J, M	S	P, R	DAL,MSI,SOA
M55342^09@205#&	205	500 (char. E, H) or 1000 (char. K, M)	E, H, K, M	B, C, W	D	S	P, R	DAL,MSI,SOA
M55342^09@210#&	210	500 (char. E, H) or 1000 (char. K, M)	E, H, K, M	B, C, W	D	S	P, R	DAL,MSI,SOA
M55342^09@215#&	215	500 (char. E, H) or 1000 (char. K, M)	E, H, K, M	B, C, W	D	S	P, R	DAL,MSI,SOA
M55342^09@220#&	220	500 (char. E, H) or 1000 (char. K, M)	E, H, K, M	B, C, W	G, J, M	S	P, R	DAL,MSI,SOA
M55342^09@221#&	221	500 (char. E, H) or 1000 (char. K, M)	E, H, K, M	B, C, W	D	S	P, R	DAL,MSI,SOA
M55342^09@226#&	226	500 (char. E, H) or 1000 (char. K, M)	E, H, K, M	B, C, W	D	S	P, R	DAL,MSI,SOA

M55342^09@232#&	232	500 (char. E, H) or 1000 (char. K, M)	E, H, K, M	B, C, W	D	S	P, R	DAL,MSI,SOA
M55342^09@237#&	237	500 (char. E, H) or 1000 (char. K, M)	E, H, K, M	B, C, W	D	S	P, R	DAL,MSI,SOA
M55342^09@240#&	240	500 (char. E, H) or 1000 (char. K, M)	E, H, K, M	B, C, W	G, J	S	P, R	DAL,MSI,SOA
M55342^09@243#&	243	500 (char. E, H) or 1000 (char. K, M)	E, H, K, M	B, C, W	D	S	P, R	DAL,MSI,SOA
M55342^09@249#&	249	500 (char. E, H) or 1000 (char. K, M)	E, H, K, M	B, C, W	D	S	P, R	DAL,MSI,SOA
M55342^09@255#&	255	500 (char. E, H) or 1000 (char. K, M)	E, H, K, M	B, C, W	D	S	P, R	DAL,MSI,SOA
M55342^09@261#&	261	500 (char. E, H) or 1000 (char. K, M)	E, H, K, M	B, C, W	D	S	P, R	DAL,MSI,SOA
M55342^09@267#&	267	500 (char. E, H) or 1000 (char. K, M)	E, H, K, M	B, C, W	D	S	P, R	DAL,MSI,SOA
M55342^09@270#&	270	500 (char. E, H) or 1000 (char. K, M)	E, H, K, M	B, C, W	G, J, M	S	P, R	DAL,MSI,SOA
M55342^09@274#&	274	500 (char. E, H) or 1000 (char. K, M)	E, H, K, M	B, C, W	D	S	P, R	DAL,MSI,SOA
M55342^09@280#&	280	500 (char. E, H) or 1000 (char. K, M)	E, H, K, M	B, C, W	D	S	P, R	DAL,MSI,SOA
M55342^09@287#&	287	500 (char. E, H) or 1000 (char. K, M)	E, H, K, M	B, C, W	D	S	P, R	DAL,MSI,SOA
M55342^09@294#&	294	500 (char. E, H) or 1000 (char. K, M)	E, H, K, M	B, C, W	D	S	P, R	DAL,MSI,SOA
M55342^09@300#&	300	500 (char. E, H) or 1000 (char. K, M)	E, H, K, M	B, C, W	G, J	S	P, R	DAL,MSI,SOA
M55342^09@301#&	301	500 (char. E, H) or 1000 (char. K, M)	E, H, K, M	B, C, W	D	S	P, R	DAL,MSI,SOA
M55342^09@309#&	309	500 (char. E, H) or 1000 (char. K, M)	E, H, K, M	B, C, W	D	S	P, R	DAL,MSI,SOA
M55342^09@316#&	316	500 (char. E, H) or 1000 (char. K, M)	E, H, K, M	B, C, W	D	S	P, R	DAL,MSI,SOA
M55342^09@324#&	324	500 (char. E, H) or 1000 (char. K, M)	E, H, K, M	B, C, W	D	S	P, R	DAL,MSI,SOA
M55342^09@330#&	330	500 (char. E, H) or 1000 (char. K, M)	E, H, K, M	B, C, W	G, J, M	S	P, R	DAL,MSI,SOA
M55342^09@332#&	332	500 (char. E, H) or 1000 (char. K, M)	E, H, K, M	B, C, W	D	S	P, R	DAL,MSI,SOA
M55342^09@340#&	340	500 (char. E, H) or 1000 (char. K, M)	E, H, K, M	B, C, W	D	S	P, R	DAL,MSI,SOA
M55342^09@348#&	348	500 (char. E, H) or 1000 (char. K, M)	E, H, K, M	B, C, W	D	S	P, R	DAL,MSI,SOA
M55342^09@357#&	357	500 (char. E, H) or 1000 (char. K, M)	E, H, K, M	B, C, W	D	S	P, R	DAL,MSI,SOA
M55342^09@360#&	360	500 (char. E, H) or 1000 (char. K, M)	E, H, K, M	B, C, W	G, J	S	P, R	DAL,MSI,SOA
M55342^09@365#&	365	500 (char. E, H) or 1000 (char. K, M)	E, H, K, M	B, C, W	D	S	P, R	DAL,MSI,SOA
M55342^09@374#&	374	500 (char. E, H) or 1000 (char. K, M)	E, H, K, M	B, C, W	D	S	P, R	DAL,MSI,SOA
M55342^09@383#&	383	500 (char. E, H) or 1000 (char. K, M)	E, H, K, M	B, C, W	D	S	P, R	DAL,MSI,SOA
M55342^09@390#&	390	500 (char. E, H) or 1000 (char. K, M)	E, H, K, M	B, C, W	G, J, M	S	P, R	DAL,MSI,SOA
M55342^09@392#&	392	500 (char. E, H) or 1000 (char. K, M)	E, H, K, M	B, C, W	D	S	P, R	DAL,MSI,SOA
M55342^09@402#&	402	500 (char. E, H) or 1000 (char. K, M)	E, H, K, M	B, C, W	D	S	P, R	DAL,MSI,SOA
M55342^09@412#&	412	500 (char. E, H) or 1000 (char. K, M)	E, H, K, M	B, C, W	D	S	P, R	DAL,MSI,SOA
M55342^09@422#&	422	500 (char. E, H) or 1000 (char. K, M)	E, H, K, M	B, C, W	D	S	P, R	DAL,MSI,SOA
M55342^09@430#&	430	500 (char. E, H) or 1000 (char. K, M)	E, H, K, M	B, C, W	G, J	S	P, R	DAL,MSI,SOA
M55342^09@432#&	432	500 (char. E, H) or 1000 (char. K, M)	E, H, K, M	B, C, W	D	S	P, R	DAL,MSI,SOA
M55342^09@442#&	442	500 (char. E, H) or 1000 (char. K, M)	E, H, K, M	B, C, W	D	S	P, R	DAL,MSI,SOA
M55342^09@453#&	453	500 (char. E, H) or 1000 (char. K, M)	E, H, K, M	B, C, W	D	S	P, R	DAL,MSI,SOA
M55342^09@464#&	464	500 (char. E, H) or 1000 (char. K, M)	E, H, K, M	B, C, W	D	S	P, R	DAL,MSI,SOA
M55342^09@470#&	470	500 (char. E, H) or 1000 (char. K, M)	E, H, K, M	B, C, W	G, J, M	S	P, R	DAL,MSI,SOA
M55342^09@475#&	475	500 (char. E, H) or 1000 (char. K, M)	E, H, K, M	B, C, W	D	S	P, R	DAL,MSI,SOA
M55342^09@487#&	487	500 (char. E, H) or 1000 (char. K, M)	E, H, K, M	B, C, W	D	S	P, R	DAL,MSI,SOA
M55342^09@499#&	499	500 (char. E, H) or 1000 (char. K, M)	E, H, K, M	B, C, W	D	S	P, R	DAL,MSI,SOA
M55342^09@510#&	510	500 (char. E, H) or 1000 (char. K, M)	E, H, K, M	B, C, W	G, J	S	P, R	DAL,MSI,SOA
M55342^09@511#&	511	500 (char. E, H) or 1000 (char. K, M)	E, H, K, M	B, C, W	D	S	P, R	DAL,MSI,SOA
M55342^09@523#&	523	500 (char. E, H) or 1000 (char. K, M)	E, H, K, M	B, C, W	D	S	P, R	DAL,MSI,SOA
M55342^09@536#&	536	500 (char. E, H) or 1000 (char. K, M)	E, H, K, M	B, C, W	D	S	P, R	DAL,MSI,SOA
M55342^09@549#&	549	500 (char. E, H) or 1000 (char. K, M)	E, H, K, M	B, C, W	D	S	P, R	DAL,MSI,SOA
M55342^09@560#&	560	500 (char. E, H) or 1000 (char. K, M)	E, H, K, M	B, C, W	G, J, M	S	P, R	DAL,MSI,SOA

M55342^09@562#&	562	500 (char. E, H) or 1000 (char. K, M)	E, H, K, M	B, C, W	D	S	P, R	DAL,MSI,SOA
M55342^09@576#&	576	500 (char. E, H) or 1000 (char. K, M)	E, H, K, M	B, C, W	D	S	P, R	DAL,MSI,SOA
M55342^09@590#&	590	500 (char. E, H) or 1000 (char. K, M)	E, H, K, M	B, C, W	D	S	P, R	DAL,MSI,SOA
M55342^09@604#&	604	500 (char. E, H) or 1000 (char. K, M)	E, H, K, M	B, C, W	D	S	P, R	DAL,MSI,SOA
M55342^09@619#&	619	500 (char. E, H) or 1000 (char. K, M)	E, H, K, M	B, C, W	D	S	P, R	DAL,MSI,SOA
M55342^09@620#&	620	500 (char. E, H) or 1000 (char. K, M)	E, H, K, M	B, C, W	G, J	S	P, R	DAL,MSI,SOA
M55342^09@634#&	634	500 (char. E, H) or 1000 (char. K, M)	E, H, K, M	B, C, W	D	S	P, R	DAL,MSI,SOA
M55342^09@649#&	649	500 (char. E, H) or 1000 (char. K, M)	E, H, K, M	B, C, W	D	S	P, R	DAL,MSI,SOA
M55342^09@665#&	665	500 (char. E, H) or 1000 (char. K, M)	E, H, K, M	B, C, W	D	S	P, R	DAL,MSI,SOA
M55342^09@680#&	680	500 (char. E, H) or 1000 (char. K, M)	E, H, K, M	B, C, W	G, J, M	S	P, R	DAL,MSI,SOA
M55342^09@681#&	681	500 (char. E, H) or 1000 (char. K, M)	E, H, K, M	B, C, W	D	S	P, R	DAL,MSI,SOA
M55342^09@698#&	698	500 (char. E, H) or 1000 (char. K, M)	E, H, K, M	B, C, W	D	S	P, R	DAL,MSI,SOA
M55342^09@715#&	715	500 (char. E, H) or 1000 (char. K, M)	E, H, K, M	B, C, W	D	S	P, R	DAL,MSI,SOA
M55342^09@732#&	732	500 (char. E, H) or 1000 (char. K, M)	E, H, K, M	B, C, W	D	S	P, R	DAL,MSI,SOA
M55342^09@750#&	750	500 (char. E, H) or 1000 (char. K, M)	E, H, K, M	B, C, W	D, G, J	S	P, R	DAL,MSI,SOA
M55342^09@768#&	768	500 (char. E, H) or 1000 (char. K, M)	E, H, K, M	B, C, W	D	S	P, R	DAL,MSI,SOA
M55342^09@787#&	787	500 (char. E, H) or 1000 (char. K, M)	E, H, K, M	B, C, W	D	S	P, R	DAL,MSI,SOA
M55342^09@806#&	806	500 (char. E, H) or 1000 (char. K, M)	E, H, K, M	B, C, W	D	S	P, R	DAL,MSI,SOA
M55342^09@820#&	820	500 (char. E, H) or 1000 (char. K, M)	E, H, K, M	B, C, W	G, J, M	S	P, R	DAL,MSI,SOA
M55342^09@825#&	825	500 (char. E, H) or 1000 (char. K, M)	E, H, K, M	B, C, W	D	S	P, R	DAL,MSI,SOA
M55342^09@845#&	845	500 (char. E, H) or 1000 (char. K, M)	E, H, K, M	B, C, W	D	S	P, R	DAL,MSI,SOA
M55342^09@866#&	866	500 (char. E, H) or 1000 (char. K, M)	E, H, K, M	B, C, W	D	S	P, R	DAL,MSI,SOA
M55342^09@887#&	887	500 (char. E, H) or 1000 (char. K, M)	E, H, K, M	B, C, W	D	S	P, R	DAL,MSI,SOA
M55342^09@909#&	909	500 (char. E, H) or 1000 (char. K, M)	E, H, K, M	B, C, W	D	S	P, R	DAL,MSI,SOA
M55342^09@910#&	910	500 (char. E, H) or 1000 (char. K, M)	E, H, K, M	B, C, W	G, J	S	P, R	DAL,MSI,SOA
M55342^09@931#&	931	500 (char. E, H) or 1000 (char. K, M)	E, H, K, M	B, C, W	D	S	P, R	DAL,MSI,SOA
M55342^09@953#&	953	500 (char. E, H) or 1000 (char. K, M)	E, H, K, M	B, C, W	D	S	P, R	DAL,MSI,SOA
M55342^09@976#&	976	500 (char. E, H) or 1000 (char. K, M)	E, H, K, M	B, C, W	D	S	P, R	DAL,MSI,SOA
M55342^09@1#00&	1,000	500 (char. E, H) or 1000 (char. K, M)	E, H, K, M	B, C, W	E, H, K, N	S	P, R	DAL,MSI,SOA
M55342^09@1#02&	1,020	500 (char. E, H) or 1000 (char. K, M)	E, H, K, M	B, C, W	E	S	P, R	DAL,MSI,SOA
M55342^09@1#05&	1,050	500 (char. E, H) or 1000 (char. K, M)	E, H, K, M	B, C, W	E	S	P, R	DAL,MSI,SOA
M55342^09@1#07&	1,070	500 (char. E, H) or 1000 (char. K, M)	E, H, K, M	B, C, W	E	S	P, R	DAL,MSI,SOA
M55342^09@1#10&	1,100	500 (char. E, H) or 1000 (char. K, M)	E, H, K, M	B, C, W	E, H, K	S	P, R	DAL,MSI,SOA
M55342^09@1#13&	1,130	500 (char. E, H) or 1000 (char. K, M)	E, H, K, M	B, C, W	E	S	P, R	DAL,MSI,SOA
M55342^09@1#15&	1,150	500 (char. E, H) or 1000 (char. K, M)	E, H, K, M	B, C, W	E	S	P, R	DAL,MSI,SOA
M55342^09@1#18&	1,180	500 (char. E, H) or 1000 (char. K, M)	E, H, K, M	B, C, W	E	S	P, R	DAL,MSI,SOA
M55342^09@1#20&	1,200	500 (char. E, H) or 1000 (char. K, M)	E, H, K, M	B, C, W	H, K, N	S	P, R	DAL,MSI,SOA
M55342^09@1#21&	1,210	500 (char. E, H) or 1000 (char. K, M)	E, H, K, M	B, C, W	E	S	P, R	DAL,MSI,SOA
M55342^09@1#24&	1,240	500 (char. E, H) or 1000 (char. K, M)	E, H, K, M	B, C, W	E	S	P, R	DAL,MSI,SOA
M55342^09@1#27&	1,270	500 (char. E, H) or 1000 (char. K, M)	E, H, K, M	B, C, W	E	S	P, R	DAL,MSI,SOA
M55342^09@1#30&	1,300	500 (char. E, H) or 1000 (char. K, M)	E, H, K, M	B, C, W	E, H, K	S	P, R	DAL,MSI,SOA
M55342^09@1#33&	1,330	500 (char. E, H) or 1000 (char. K, M)	E, H, K, M	B, C, W	E	S	P, R	DAL,MSI,SOA
M55342^09@1#37&	1,370	500 (char. E, H) or 1000 (char. K, M)	E, H, K, M	B, C, W	E	S	P, R	DAL,MSI,SOA
M55342^09@1#40&	1,400	500 (char. E, H) or 1000 (char. K, M)	E, H, K, M	B, C, W	E	S	P, R	DAL,MSI,SOA
M55342^09@1#43&	1,430	500 (char. E, H) or 1000 (char. K, M)	E, H, K, M	B, C, W	E	S	P, R	DAL,MSI,SOA
M55342^09@1#47&	1,470	500 (char. E, H) or 1000 (char. K, M)	E, H, K, M	B, C, W	E	S	P, R	DAL,MSI,SOA
M55342^09@1#50&	1,500	500 (char. E, H) or 1000 (char. K, M)	E, H, K, M	B, C, W	E, H, K, N	S	P, R	DAL,MSI,SOA

M55342^09@1#54&	1,540	500 (char. E, H) or 1000 (char. K, M)	E, H, K, M	B, C, W	E	S	P, R	DAL,MSI,SOA
M55342^09@1#58&	1,580	500 (char. E, H) or 1000 (char. K, M)	E, H, K, M	B, C, W	E	S	P, R	DAL,MSI,SOA
M55342^09@1#60&	1,600	500 (char. E, H) or 1000 (char. K, M)	E, H, K, M	B, C, W	H, K	S	P, R	DAL,MSI,SOA
M55342^09@1#62&	1,620	500 (char. E, H) or 1000 (char. K, M)	E, H, K, M	B, C, W	E	S	P, R	DAL,MSI,SOA
M55342^09@1#65&	1,650	500 (char. E, H) or 1000 (char. K, M)	E, H, K, M	B, C, W	E	S	P, R	DAL,MSI,SOA
M55342^09@1#69&	1,690	500 (char. E, H) or 1000 (char. K, M)	E, H, K, M	B, C, W	E	S	P, R	DAL,MSI,SOA
M55342^09@1#74&	1,740	500 (char. E, H) or 1000 (char. K, M)	E, H, K, M	B, C, W	E	S	P, R	DAL,MSI,SOA
M55342^09@1#78&	1,780	500 (char. E, H) or 1000 (char. K, M)	E, H, K, M	B, C, W	E	S	P, R	DAL,MSI,SOA
M55342^09@1#80&	1,800	500 (char. E, H) or 1000 (char. K, M)	E, H, K, M	B, C, W	H, K, N	S	P, R	DAL,MSI,SOA
M55342^09@1#82&	1,820	500 (char. E, H) or 1000 (char. K, M)	E, H, K, M	B, C, W	E	S	P, R	DAL,MSI,SOA
M55342^09@1#87&	1,870	500 (char. E, H) or 1000 (char. K, M)	E, H, K, M	B, C, W	E	S	P, R	DAL,MSI,SOA
M55342^09@1#91&	1,910	500 (char. E, H) or 1000 (char. K, M)	E, H, K, M	B, C, W	E	S	P, R	DAL,MSI,SOA
M55342^09@1#96&	1,960	500 (char. E, H) or 1000 (char. K, M)	E, H, K, M	B, C, W	E	S	P, R	DAL,MSI,SOA
M55342^09@2#00&	2,000	500 (char. E, H) or 1000 (char. K, M)	E, H, K, M	B, C, W	E, H, K, N	S	P, R	DAL,MSI,SOA
M55342^09@2#05&	2,050	500 (char. E, H) or 1000 (char. K, M)	E, H, K, M	B, C, W	E	S	P, R	DAL,MSI,SOA
M55342^09@2#10&	2,100	500 (char. E, H) or 1000 (char. K, M)	E, H, K, M	B, C, W	E	S	P, R	DAL,MSI,SOA
M55342^09@2#15&	2,150	500 (char. E, H) or 1000 (char. K, M)	E, H, K, M	B, C, W	E	S	P, R	DAL,MSI,SOA
M55342^09@2#20&	2,200	500 (char. E, H) or 1000 (char. K, M)	E, H, K, M	B, C, W	H, K, N	S	P, R	DAL,MSI,SOA
M55342^09@2#21&	2,210	500 (char. E, H) or 1000 (char. K, M)	E, H, K, M	B, C, W	E	S	P, R	DAL,MSI,SOA
M55342^09@2#26&	2,260	500 (char. E, H) or 1000 (char. K, M)	E, H, K, M	B, C, W	E	S	P, R	DAL,MSI,SOA
M55342^09@2#32&	2,320	500 (char. E, H) or 1000 (char. K, M)	E, H, K, M	B, C, W	E	S	P, R	DAL,MSI,SOA
M55342^09@2#37&	2,370	500 (char. E, H) or 1000 (char. K, M)	E, H, K, M	B, C, W	E	S	P, R	DAL,MSI,SOA
M55342^09@2#40&	2,400	500 (char. E, H) or 1000 (char. K, M)	E, H, K, M	B, C, W	H, K	S	P, R	DAL,MSI,SOA
M55342^09@2#43&	2,430	500 (char. E, H) or 1000 (char. K, M)	E, H, K, M	B, C, W	E	S	P, R	DAL,MSI,SOA
M55342^09@2#49&	2,490	500 (char. E, H) or 1000 (char. K, M)	E, H, K, M	B, C, W	E	S	P, R	DAL,MSI,SOA
M55342^09@2#55&	2,550	500 (char. E, H) or 1000 (char. K, M)	E, H, K, M	B, C, W	E	S	P, R	DAL,MSI,SOA
M55342^09@2#61&	2,610	500 (char. E, H) or 1000 (char. K, M)	E, H, K, M	B, C, W	E	S	P, R	DAL,MSI,SOA
M55342^09@2#67&	2,670	500 (char. E, H) or 1000 (char. K, M)	E, H, K, M	B, C, W	E	S	P, R	DAL,MSI,SOA
M55342^09@2#70&	2,700	500 (char. E, H) or 1000 (char. K, M)	E, H, K, M	B, C, W	H, K, N	S	P, R	DAL,MSI,SOA
M55342^09@2#74&	2,740	500 (char. E, H) or 1000 (char. K, M)	E, H, K, M	B, C, W	E	S	P, R	DAL,MSI,SOA
M55342^09@2#80&	2,800	500 (char. E, H) or 1000 (char. K, M)	E, H, K, M	B, C, W	E	S	P, R	DAL,MSI,SOA
M55342^09@2#87&	2,870	500 (char. E, H) or 1000 (char. K, M)	E, H, K, M	B, C, W	E	S	P, R	DAL,MSI,SOA
M55342^09@2#94&	2,940	500 (char. E, H) or 1000 (char. K, M)	E, H, K, M	B, C, W	E	S	P, R	DAL,MSI,SOA
M55342^09@3#00&	3,000	500 (char. E, H) or 1000 (char. K, M)	E, H, K, M	B, C, W	H, K	S	P, R	DAL,MSI,SOA
M55342^09@3#01&	3,010	500 (char. E, H) or 1000 (char. K, M)	E, H, K, M	B, C, W	E	S	P, R	DAL,MSI,SOA
M55342^09@3#09&	3,090	500 (char. E, H) or 1000 (char. K, M)	E, H, K, M	B, C, W	E	S	P, R	DAL,MSI,SOA
M55342^09@3#16&	3,160	500 (char. E, H) or 1000 (char. K, M)	E, H, K, M	B, C, W	E	S	P, R	DAL,MSI,SOA
M55342^09@3#24&	3,240	500 (char. E, H) or 1000 (char. K, M)	E, H, K, M	B, C, W	E	S	P, R	DAL,MSI,SOA
M55342^09@3#30&	3,300	500 (char. E, H) or 1000 (char. K, M)	E, H, K, M	B, C, W	H, K, N	S	P, R	DAL,MSI,SOA
M55342^09@3#32&	3,320	500 (char. E, H) or 1000 (char. K, M)	E, H, K, M	B, C, W	E	S	P, R	DAL,MSI,SOA
M55342^09@3#40&	3,400	500 (char. E, H) or 1000 (char. K, M)	E, H, K, M	B, C, W	E	S	P, R	DAL,MSI,SOA
M55342^09@3#48&	3,480	500 (char. E, H) or 1000 (char. K, M)	E, H, K, M	B, C, W	E	S	P, R	DAL,MSI,SOA
M55342^09@3#57&	3,570	500 (char. E, H) or 1000 (char. K, M)	E, H, K, M	B, C, W	E	S	P, R	DAL,MSI,SOA
M55342^09@3#60&	3,600	500 (char. E, H) or 1000 (char. K, M)	E, H, K, M	B, C, W	H, K	S	P, R	DAL,MSI,SOA
M55342^09@3#65&	3,650	500 (char. E, H) or 1000 (char. K, M)	E, H, K, M	B, C, W	E	S	P, R	DAL,MSI,SOA
M55342^09@3#74&	3,740	500 (char. E, H) or 1000 (char. K, M)	E, H, K, M	B, C, W	E	S	P, R	DAL,MSI,SOA
M55342^09@3#83&	3,830	500 (char. E, H) or 1000 (char. K, M)	E, H, K, M	B, C, W	E	S	P, R	DAL,MSI,SOA

M55342^09@3#90&	3,900	500 (char. E, H) or 1000 (char. K, M)	E, H, K, M	B, C, W	H, K, N	S	P, R	DAL,MSI,SOA
M55342^09@3#92&	3,920	500 (char. E, H) or 1000 (char. K, M)	E, H, K, M	B, C, W	E	S	P, R	DAL,MSI,SOA
M55342^09@4#02&	4,020	500 (char. E, H) or 1000 (char. K, M)	E, H, K, M	B, C, W	E	S	P, R	DAL,MSI,SOA
M55342^09@4#12&	4,120	500 (char. E, H) or 1000 (char. K, M)	E, H, K, M	B, C, W	E	S	P, R	DAL,MSI,SOA
M55342^09@4#22&	4,220	500 (char. E, H) or 1000 (char. K, M)	E, H, K, M	B, C, W	E	S	P, R	DAL,MSI,SOA
M55342^09@4#30&	4,300	500 (char. E, H) or 1000 (char. K, M)	E, H, K, M	B, C, W	H, K	S	P, R	DAL,MSI,SOA
M55342^09@4#32&	4,320	500 (char. E, H) or 1000 (char. K, M)	E, H, K, M	B, C, W	E	S	P, R	DAL,MSI,SOA
M55342^09@4#42&	4,420	500 (char. E, H) or 1000 (char. K, M)	E, H, K, M	B, C, W	E	S	P, R	DAL,MSI,SOA
M55342^09@4#53&	4,530	500 (char. E, H) or 1000 (char. K, M)	E, H, K, M	B, C, W	E	S	P, R	DAL,MSI,SOA
M55342^09@4#64&	4,640	500 (char. E, H) or 1000 (char. K, M)	E, H, K, M	B, C, W	E	S	P, R	DAL,MSI,SOA
M55342^09@4#70&	4,700	500 (char. E, H) or 1000 (char. K, M)	E, H, K, M	B, C, W	H, K, N	S	P, R	DAL,MSI,SOA
M55342^09@4#75&	4,750	500 (char. E, H) or 1000 (char. K, M)	E, H, K, M	B, C, W	E	S	P, R	DAL,MSI,SOA
M55342^09@4#87&	4,870	500 (char. E, H) or 1000 (char. K, M)	E, H, K, M	B, C, W	E	S	P, R	DAL,MSI,SOA
M55342^09@4#99&	4,990	500 (char. E, H) or 1000 (char. K, M)	E, H, K, M	B, C, W	E	S	P, R	DAL,MSI,SOA
M55342^09@5#10&	5,100	500 (char. E, H) or 1000 (char. K, M)	E, H, K, M	B, C, W	H, K	S	P, R	DAL,MSI,SOA
M55342^09@5#11&	5,110	500 (char. E, H) or 1000 (char. K, M)	E, H, K, M	B, C, W	E	S	P, R	DAL,MSI,SOA
M55342^09@5#23&	5,230	500 (char. E, H) or 1000 (char. K, M)	E, H, K, M	B, C, W	E	S	P, R	DAL,MSI,SOA
M55342^09@5#36&	5,360	500 (char. E, H) or 1000 (char. K, M)	E, H, K, M	B, C, W	E	S	P, R	DAL,MSI,SOA
M55342^09@5#49&	5,490	500 (char. E, H) or 1000 (char. K, M)	E, H, K, M	B, C, W	E	S	P, R	DAL,MSI,SOA
M55342^09@5#60&	5,600	500 (char. E, H) or 1000 (char. K, M)	E, H, K, M	B, C, W	H, K, N	S	P, R	DAL,MSI,SOA
M55342^09@5#62&	5,620	500 (char. E, H) or 1000 (char. K, M)	E, H, K, M	B, C, W	E	S	P, R	DAL,MSI,SOA
M55342^09@5#76&	5,760	500 (char. E, H) or 1000 (char. K, M)	E, H, K, M	B, C, W	E	S	P, R	DAL,MSI,SOA
M55342^09@5#90&	5,900	500 (char. E, H) or 1000 (char. K, M)	E, H, K, M	B, C, W	E	S	P, R	DAL,MSI,SOA
M55342^09@6#04&	6,040	500 (char. E, H) or 1000 (char. K, M)	E, H, K, M	B, C, W	E	S	P, R	DAL,MSI,SOA
M55342^09@6#19&	6,190	500 (char. E, H) or 1000 (char. K, M)	E, H, K, M	B, C, W	E	S	P, R	DAL,MSI,SOA
M55342^09@6#20&	6,200	500 (char. E, H) or 1000 (char. K, M)	E, H, K, M	B, C, W	H, K	S	P, R	DAL,MSI,SOA
M55342^09@6#34&	6,340	500 (char. E, H) or 1000 (char. K, M)	E, H, K, M	B, C, W	E	S	P, R	DAL,MSI,SOA
M55342^09@6#49&	6,490	500 (char. E, H) or 1000 (char. K, M)	E, H, K, M	B, C, W	E	S	P, R	DAL,MSI,SOA
M55342^09@6#65&	6,650	500 (char. E, H) or 1000 (char. K, M)	E, H, K, M	B, C, W	E	S	P, R	DAL,MSI,SOA
M55342^09@6#80&	6,800	500 (char. E, H) or 1000 (char. K, M)	E, H, K, M	B, C, W	H, K, N	S	P, R	DAL,MSI,SOA
M55342^09@6#81&	6,810	500 (char. E, H) or 1000 (char. K, M)	E, H, K, M	B, C, W	E	S	P, R	DAL,MSI,SOA
M55342^09@6#98&	6,980	500 (char. E, H) or 1000 (char. K, M)	E, H, K, M	B, C, W	E	S	P, R	DAL,MSI,SOA
M55342^09@7#15&	7,150	500 (char. E, H) or 1000 (char. K, M)	E, H, K, M	B, C, W	E	S	P, R	DAL,MSI,SOA
M55342^09@7#32&	7,320	500 (char. E, H) or 1000 (char. K, M)	E, H, K, M	B, C, W	E	S	P, R	DAL,MSI,SOA
M55342^09@7#50&	7,500	500 (char. E, H) or 1000 (char. K, M)	E, H, K, M	B, C, W	E, H, K	S	P, R	DAL,MSI,SOA
M55342^09@7#68&	7,680	500 (char. E, H) or 1000 (char. K, M)	E, H, K, M	B, C, W	E	S	P, R	DAL,MSI,SOA
M55342^09@7#87&	7,870	500 (char. E, H) or 1000 (char. K, M)	E, H, K, M	B, C, W	E	S	P, R	DAL,MSI,SOA
M55342^09@8#06&	8,060	500 (char. E, H) or 1000 (char. K, M)	E, H, K, M	B, C, W	E	S	P, R	DAL,MSI,SOA
M55342^09@8#20&	8,200	500 (char. E, H) or 1000 (char. K, M)	E, H, K, M	B, C, W	H, K, N	S	P, R	DAL,MSI,SOA
M55342^09@8#25&	8,250	500 (char. E, H) or 1000 (char. K, M)	E, H, K, M	B, C, W	E	S	P, R	DAL,MSI,SOA
M55342^09@8#45&	8,450	500 (char. E, H) or 1000 (char. K, M)	E, H, K, M	B, C, W	E	S	P, R	DAL,MSI,SOA
M55342^09@8#66&	8,660	500 (char. E, H) or 1000 (char. K, M)	E, H, K, M	B, C, W	E	S	P, R	DAL,MSI,SOA
M55342^09@8#87&	8,870	500 (char. E, H) or 1000 (char. K, M)	E, H, K, M	B, C, W	E	S	P, R	DAL,MSI,SOA
M55342^09@9#09&	9,090	500 (char. E, H) or 1000 (char. K, M)	E, H, K, M	B, C, W	E	S	P, R	DAL,MSI,SOA
M55342^09@9#10&	9,100	500 (char. E, H) or 1000 (char. K, M)	E, H, K, M	B, C, W	H, K	S	P, R	DAL,MSI,SOA
M55342^09@9#31&	9,310	500 (char. E, H) or 1000 (char. K, M)	E, H, K, M	B, C, W	E	S	P, R	DAL,MSI,SOA
M55342^09@9#53&	9,530	500 (char. E, H) or 1000 (char. K, M)	E, H, K, M	B, C, W	E	S	P, R	DAL,MSI,SOA

M55342^09@9#76&	9,760	500 (char. E, H) or 1000 (char. K, M)	E, H, K, M	B, C, W	E	S	P, R	DAL,MSI,SOA
M55342^09@10#0&	10,000	500 (char. E, H) or 1000 (char. K, M)	E, H, K, M	B, C, W	E, H, K, N	S	P, R	DAL,MSI,SOA
M55342^09@10#2&	10,200	500 (char. E, H) or 1000 (char. K, M)	E, H, K, M	B, C, W	E	S	P, R	DAL,MSI,SOA
M55342^09@10#5&	10,500	500 (char. E, H) or 1000 (char. K, M)	E, H, K, M	B, C, W	E	S	P, R	DAL,MSI,SOA
M55342^09@10#7&	10,700	500 (char. E, H) or 1000 (char. K, M)	E, H, K, M	B, C, W	E	S	P, R	DAL,MSI,SOA
M55342^09@11#0&	11,000	500 (char. E, H) or 1000 (char. K, M)	E, H, K, M	B, C, W	E, H, K	S	P, R	DAL,MSI,SOA
M55342^09@11#3&	11,300	500 (char. E, H) or 1000 (char. K, M)	E, H, K, M	B, C, W	E	S	P, R	DAL,MSI,SOA
M55342^09@11#5&	11,500	500 (char. E, H) or 1000 (char. K, M)	E, H, K, M	B, C, W	E	S	P, R	DAL,MSI,SOA
M55342^09@11#8&	11,800	500 (char. E, H) or 1000 (char. K, M)	E, H, K, M	B, C, W	E	S	P, R	DAL,MSI,SOA
M55342^09@12#0&	12,000	500 (char. E, H) or 1000 (char. K, M)	E, H, K, M	B, C, W	H, K, N	S	P, R	DAL,MSI,SOA
M55342^09@12#1&	12,100	500 (char. E, H) or 1000 (char. K, M)	E, H, K, M	B, C, W	E	S	P, R	DAL,MSI,SOA
M55342^09@12#4&	12,400	500 (char. E, H) or 1000 (char. K, M)	E, H, K, M	B, C, W	E	S	P, R	DAL,MSI,SOA
M55342^09@12#7&	12,700	500 (char. E, H) or 1000 (char. K, M)	E, H, K, M	B, C, W	E	S	P, R	DAL,MSI,SOA
M55342^09@13#0&	13,000	500 (char. E, H) or 1000 (char. K, M)	E, H, K, M	B, C, W	E, H, K	S	P, R	DAL,MSI,SOA
M55342^09@13#3&	13,300	500 (char. E, H) or 1000 (char. K, M)	E, H, K, M	B, C, W	E	S	P, R	DAL,MSI,SOA
M55342^09@13#7&	13,700	500 (char. E, H) or 1000 (char. K, M)	E, H, K, M	B, C, W	E	S	P, R	DAL,MSI,SOA
M55342^09@14#0&	14,000	500 (char. E, H) or 1000 (char. K, M)	E, H, K, M	B, C, W	E	S	P, R	DAL,MSI,SOA
M55342^09@14#3&	14,300	500 (char. E, H) or 1000 (char. K, M)	E, H, K, M	B, C, W	E	S	P, R	DAL,MSI,SOA
M55342^09@14#7&	14,700	500 (char. E, H) or 1000 (char. K, M)	E, H, K, M	B, C, W	E	S	P, R	DAL,MSI,SOA
M55342^09@15#0&	15,000	500 (char. E, H) or 1000 (char. K, M)	E, H, K, M	B, C, W	E, H, K, N	S	P, R	DAL,MSI,SOA
M55342^09@15#4&	15,400	500 (char. E, H) or 1000 (char. K, M)	E, H, K, M	B, C, W	E	S	P, R	DAL,MSI,SOA
M55342^09@15#8&	15,800	500 (char. E, H) or 1000 (char. K, M)	E, H, K, M	B, C, W	E	S	P, R	DAL,MSI,SOA
M55342^09@16#0&	16,000	500 (char. E, H) or 1000 (char. K, M)	E, H, K, M	B, C, W	H, K	S	P, R	DAL,MSI,SOA
M55342^09@16#2&	16,200	500 (char. E, H) or 1000 (char. K, M)	E, H, K, M	B, C, W	E	S	P, R	DAL,MSI,SOA
M55342^09@16#5&	16,500	500 (char. E, H) or 1000 (char. K, M)	E, H, K, M	B, C, W	E	S	P, R	DAL,MSI,SOA
M55342^09@16#9&	16,900	500 (char. E, H) or 1000 (char. K, M)	E, H, K, M	B, C, W	E	S	P, R	DAL,MSI,SOA
M55342^09@17#4&	17,400	500 (char. E, H) or 1000 (char. K, M)	E, H, K, M	B, C, W	E	S	P, R	DAL,MSI,SOA
M55342^09@17#8&	17,800	500 (char. E, H) or 1000 (char. K, M)	E, H, K, M	B, C, W	E	S	P, R	DAL,MSI,SOA
M55342^09@18#0&	18,000	500 (char. E, H) or 1000 (char. K, M)	E, H, K, M	B, C, W	H, K, N	S	P, R	DAL,MSI,SOA
M55342^09@18#2&	18,200	500 (char. E, H) or 1000 (char. K, M)	E, H, K, M	B, C, W	E	S	P, R	DAL,MSI,SOA
M55342^09@18#7&	18,700	500 (char. E, H) or 1000 (char. K, M)	E, H, K, M	B, C, W	E	S	P, R	DAL,MSI,SOA
M55342^09@19#1&	19,100	500 (char. E, H) or 1000 (char. K, M)	E, H, K, M	B, C, W	E	S	P, R	DAL,MSI,SOA
M55342^09@19#6&	19,600	500 (char. E, H) or 1000 (char. K, M)	E, H, K, M	B, C, W	E	S	P, R	DAL,MSI,SOA
M55342^09@20#0&	20,000	500 (char. E, H) or 1000 (char. K, M)	E, H, K, M	B, C, W	E, H, K, N	S	P, R	DAL,MSI,SOA
M55342^09@20#5&	20,500	500 (char. E, H) or 1000 (char. K, M)	E, H, K, M	B, C, W	E	S	P, R	DAL,MSI,SOA
M55342^09@21#0&	21,000	500 (char. E, H) or 1000 (char. K, M)	E, H, K, M	B, C, W	E	S	P, R	DAL,MSI,SOA
M55342^09@21#5&	21,500	500 (char. E, H) or 1000 (char. K, M)	E, H, K, M	B, C, W	E	S	P, R	DAL,MSI,SOA
M55342^09@22#0&	22,000	500 (char. E, H) or 1000 (char. K, M)	E, H, K, M	B, C, W	H, K, N	S	P, R	DAL,MSI,SOA
M55342^09@22#1&	22,100	500 (char. E, H) or 1000 (char. K, M)	E, H, K, M	B, C, W	E	S	P, R	DAL,MSI,SOA
M55342^09@22#6&	22,600	500 (char. E, H) or 1000 (char. K, M)	E, H, K, M	B, C, W	E	S	P, R	DAL,MSI,SOA
M55342^09@23#2&	23,200	500 (char. E, H) or 1000 (char. K, M)	E, H, K, M	B, C, W	E	S	P, R	DAL,MSI,SOA
M55342^09@23#7&	23,700	500 (char. E, H) or 1000 (char. K, M)	E, H, K, M	B, C, W	E	S	P, R	DAL,MSI,SOA
M55342^09@24#0&	24,000	500 (char. E, H) or 1000 (char. K, M)	E, H, K, M	B, C, W	H, K	S	P, R	DAL,MSI,SOA
M55342^09@24#3&	24,300	500 (char. E, H) or 1000 (char. K, M)	E, H, K, M	B, C, W	E	S	P, R	DAL,MSI,SOA
M55342^09@24#9&	24,900	500 (char. E, H) or 1000 (char. K, M)	E, H, K, M	B, C, W	E	S	P, R	DAL,MSI,SOA
M55342^09@25#5&	25,500	500 (char. E, H) or 1000 (char. K, M)	E, H, K, M	B, C, W	E	S	P, R	DAL,MSI,SOA
M55342^09@26#1&	26,100	500 (char. E, H) or 1000 (char. K, M)	E, H, K, M	B, C, W	E	S	P, R	DAL,MSI,SOA

M55342^09@26#7&	26,700	500 (char. E, H) or 1000 (char. K, M)	E, H, K, M	B, C, W	E	S	P, R	DAL,MSI,SOA
M55342^09@27#0&	27,000	500 (char. E, H) or 1000 (char. K, M)	E, H, K, M	B, C, W	H, K, N	S	P, R	DAL,MSI,SOA
M55342^09@27#4&	27,400	500 (char. E, H) or 1000 (char. K, M)	E, H, K, M	B, C, W	E	S	P, R	DAL,MSI,SOA
M55342^09@28#0&	28,000	500 (char. E, H) or 1000 (char. K, M)	E, H, K, M	B, C, W	E	S	P, R	DAL,MSI,SOA
M55342^09@28#7&	28,700	500 (char. E, H) or 1000 (char. K, M)	E, H, K, M	B, C, W	E	S	P, R	DAL,MSI,SOA
M55342^09@29#4&	29,400	500 (char. E, H) or 1000 (char. K, M)	E, H, K, M	B, C, W	E	S	P, R	DAL,MSI,SOA
M55342^09@30#0&	30,000	500 (char. E, H) or 1000 (char. K, M)	E, H, K, M	B, C, W	H, K	S	P, R	DAL,MSI,SOA
M55342^09@30#1&	30,100	500 (char. E, H) or 1000 (char. K, M)	E, H, K, M	B, C, W	E	S	P, R	DAL,MSI,SOA
M55342^09@30#9&	30,900	500 (char. E, H) or 1000 (char. K, M)	E, H, K, M	B, C, W	E	S	P, R	DAL,MSI,SOA
M55342^09@31#6&	31,600	500 (char. E, H) or 1000 (char. K, M)	E, H, K, M	B, C, W	E	S	P, R	DAL,MSI,SOA
M55342^09@32#4&	32,400	500 (char. E, H) or 1000 (char. K, M)	E, H, K, M	B, C, W	E	S	P, R	DAL,MSI,SOA
M55342^09@33#0&	33,000	500 (char. E, H) or 1000 (char. K, M)	E, H, K, M	B, C, W	H, K, N	S	P, R	DAL,MSI,SOA
M55342^09@33#2&	33,200	500 (char. E, H) or 1000 (char. K, M)	E, H, K, M	B, C, W	E	S	P, R	DAL,MSI,SOA
M55342^09@34#0&	34,000	500 (char. E, H) or 1000 (char. K, M)	E, H, K, M	B, C, W	E	S	P, R	DAL,MSI,SOA
M55342^09@34#8&	34,800	500 (char. E, H) or 1000 (char. K, M)	E, H, K, M	B, C, W	E	S	P, R	DAL,MSI,SOA
M55342^09@35#7&	35,700	500 (char. E, H) or 1000 (char. K, M)	E, H, K, M	B, C, W	E	S	P, R	DAL,MSI,SOA
M55342^09@36#0&	36,000	500 (char. E, H) or 1000 (char. K, M)	E, H, K, M	B, C, W	H, K	S	P, R	DAL,MSI,SOA
M55342^09@36#5&	36,500	500 (char. E, H) or 1000 (char. K, M)	E, H, K, M	B, C, W	E	S	P, R	DAL,MSI,SOA
M55342^09@37#4&	37,400	500 (char. E, H) or 1000 (char. K, M)	E, H, K, M	B, C, W	E	S	P, R	DAL,MSI,SOA
M55342^09@38#3&	38,300	500 (char. E, H) or 1000 (char. K, M)	E, H, K, M	B, C, W	E	S	P, R	DAL,MSI,SOA
M55342^09@39#0&	39,000	500 (char. E, H) or 1000 (char. K, M)	E, H, K, M	B, C, W	H, K, N	S	P, R	DAL,MSI,SOA
M55342^09@39#2&	39,200	500 (char. E, H) or 1000 (char. K, M)	E, H, K, M	B, C, W	E	S	P, R	DAL,MSI,SOA
M55342^09@40#2&	40,200	500 (char. E, H) or 1000 (char. K, M)	E, H, K, M	B, C, W	E	S	P, R	DAL,MSI,SOA
M55342^09@41#2&	41,200	500 (char. E, H) or 1000 (char. K, M)	E, H, K, M	B, C, W	E	S	P, R	DAL,MSI,SOA
M55342^09@42#2&	42,200	500 (char. E, H) or 1000 (char. K, M)	E, H, K, M	B, C, W	E	S	P, R	DAL,MSI,SOA
M55342^09@43#0&	43,000	500 (char. E, H) or 1000 (char. K, M)	E, H, K, M	B, C, W	H, K	S	P, R	DAL,MSI,SOA
M55342^09@43#2&	43,200	500 (char. E, H) or 1000 (char. K, M)	E, H, K, M	B, C, W	E	S	P, R	DAL,MSI,SOA
M55342^09@44#2&	44,200	500 (char. E, H) or 1000 (char. K, M)	E, H, K, M	B, C, W	E	S	P, R	DAL,MSI,SOA
M55342^09@45#3&	45,300	500 (char. E, H) or 1000 (char. K, M)	E, H, K, M	B, C, W	E	S	P, R	DAL,MSI,SOA
M55342^09@46#4&	46,400	500 (char. E, H) or 1000 (char. K, M)	E, H, K, M	B, C, W	E	S	P, R	DAL,MSI,SOA
M55342^09@47#0&	47,000	500 (char. E, H) or 1000 (char. K, M)	E, H, K, M	B, C, W	H, K, N	S	P, R	DAL,MSI,SOA
M55342^09@47#5&	47,500	500 (char. E, H) or 1000 (char. K, M)	E, H, K, M	B, C, W	E	S	P, R	DAL,MSI,SOA
M55342^09@48#7&	48,700	500 (char. E, H) or 1000 (char. K, M)	E, H, K, M	B, C, W	E	S	P, R	DAL,MSI,SOA
M55342^09@49#9&	49,900	500 (char. E, H) or 1000 (char. K, M)	E, H, K, M	B, C, W	E	S	P, R	DAL,MSI,SOA
M55342^09@51#0&	51,000	500 (char. E, H) or 1000 (char. K, M)	E, H, K, M	B, C, W	H, K	S	P, R	DAL,MSI,SOA
M55342^09@51#1&	51,100	500 (char. E, H) or 1000 (char. K, M)	E, H, K, M	B, C, W	E	S	P, R	DAL,MSI,SOA
M55342^09@52#3&	52,300	500 (char. E, H) or 1000 (char. K, M)	E, H, K, M	B, C, W	E	S	P, R	DAL,MSI,SOA
M55342^09@53#6&	53,600	500 (char. E, H) or 1000 (char. K, M)	E, H, K, M	B, C, W	E	S	P, R	DAL,MSI,SOA
M55342^09@54#9&	54,900	500 (char. E, H) or 1000 (char. K, M)	E, H, K, M	B, C, W	E	S	P, R	DAL,MSI,SOA
M55342^09@56#0&	56,000	500 (char. E, H) or 1000 (char. K, M)	E, H, K, M	B, C, W	H, K, N	S	P, R	DAL,MSI,SOA
M55342^09@56#2&	56,200	500 (char. E, H) or 1000 (char. K, M)	E, H, K, M	B, C, W	E	S	P, R	DAL,MSI,SOA
M55342^09@57#6&	57,600	500 (char. E, H) or 1000 (char. K, M)	E, H, K, M	B, C, W	E	S	P, R	DAL,MSI,SOA
M55342^09@59#0&	59,000	500 (char. E, H) or 1000 (char. K, M)	E, H, K, M	B, C, W	E	S	P, R	DAL,MSI,SOA
M55342^09@60#4&	60,400	500 (char. E, H) or 1000 (char. K, M)	E, H, K, M	B, C, W	E	S	P, R	DAL,MSI,SOA
M55342^09@61#9&	61,900	500 (char. E, H) or 1000 (char. K, M)	E, H, K, M	B, C, W	E	S	P, R	DAL,MSI,SOA
M55342^09@62#0&	62,000	500 (char. E, H) or 1000 (char. K, M)	E, H, K, M	B, C, W	H, K	S	P, R	DAL,MSI,SOA
M55342^09@63#4&	63,400	500 (char. E, H) or 1000 (char. K, M)	E, H, K, M	B, C, W	E	S	P, R	DAL,MSI,SOA

M55342^09@64#9&	64,900	500 (char. E, H) or 1000 (char. K, M)	E, H, K, M	B, C, W	E	S	P, R	DAL,MSI,SOA
M55342^09@66#5&	66,500	500 (char. E, H) or 1000 (char. K, M)	E, H, K, M	B, C, W	E	S	P, R	DAL,MSI,SOA
M55342^09@68#0&	68,000	500 (char. E, H) or 1000 (char. K, M)	E, H, K, M	B, C, W	H, K, N	S	P, R	DAL,MSI,SOA
M55342^09@68#1&	68,100	500 (char. E, H) or 1000 (char. K, M)	E, H, K, M	B, C, W	E	S	P, R	DAL,MSI,SOA
M55342^09@69#8&	69,800	500 (char. E, H) or 1000 (char. K, M)	E, H, K, M	B, C, W	E	S	P, R	DAL,MSI,SOA
M55342^09@71#5&	71,500	500 (char. E, H) or 1000 (char. K, M)	E, H, K, M	B, C, W	E	S	P, R	DAL,MSI,SOA
M55342^09@73#2&	73,200	500 (char. E, H) or 1000 (char. K, M)	E, H, K, M	B, C, W	E	S	P, R	DAL,MSI,SOA
M55342^09@75#0&	75,000	500 (char. E, H) or 1000 (char. K, M)	E, H, K, M	B, C, W	E, H, K	S	P, R	DAL,MSI,SOA
M55342^09@76#8&	76,800	500 (char. E, H) or 1000 (char. K, M)	E, H, K, M	B, C, W	E	S	P, R	DAL,MSI,SOA
M55342^09@78#7&	78,700	500 (char. E, H) or 1000 (char. K, M)	E, H, K, M	B, C, W	E	S	P, R	DAL,MSI,SOA
M55342^09@80#6&	80,600	500 (char. E, H) or 1000 (char. K, M)	E, H, K, M	B, C, W	E	S	P, R	DAL,MSI,SOA
M55342^09@82#0&	82,000	500 (char. E, H) or 1000 (char. K, M)	E, H, K, M	B, C, W	H, K, N	S	P, R	DAL,MSI,SOA
M55342^09@82#5&	82,500	500 (char. E, H) or 1000 (char. K, M)	E, H, K, M	B, C, W	E	S	P, R	DAL,MSI,SOA
M55342^09@84#5&	84,500	500 (char. E, H) or 1000 (char. K, M)	E, H, K, M	B, C, W	E	S	P, R	DAL,MSI,SOA
M55342^09@86#6&	86,600	500 (char. E, H) or 1000 (char. K, M)	E, H, K, M	B, C, W	E	S	P, R	DAL,MSI,SOA
M55342^09@88#7&	88,700	500 (char. E, H) or 1000 (char. K, M)	E, H, K, M	B, C, W	E	S	P, R	DAL,MSI,SOA
M55342^09@90#9&	90,900	500 (char. E, H) or 1000 (char. K, M)	E, H, K, M	B, C, W	E	S	P, R	DAL,MSI,SOA
M55342^09@91#0&	91,000	500 (char. E, H) or 1000 (char. K, M)	E, H, K, M	B, C, W	H, K	S	P, R	DAL,MSI,SOA
M55342^09@93#1&	93,100	500 (char. E, H) or 1000 (char. K, M)	E, H, K, M	B, C, W	E	S	P, R	DAL,MSI,SOA
M55342^09@95#3&	95,300	500 (char. E, H) or 1000 (char. K, M)	E, H, K, M	B, C, W	E	S	P, R	DAL,MSI,SOA
M55342^09@97#6&	97,600	500 (char. E, H) or 1000 (char. K, M)	E, H, K, M	B, C, W	E	S	P, R	DAL,MSI,SOA
M55342^09@10#0&	100,000	500 (char. E, H) or 1000 (char. K, M)	E, H, K, M	B, C, W	E, H, K, N	S	P, R	DAL,MSI,SOA
M55342^09@10#2&	102,000	500 (char. E, H) or 1000 (char. K, M)	E, H, K, M	B, C, W	E	S	P, R	DAL,MSI,SOA
M55342^09@10#5&	105,000	500 (char. E, H) or 1000 (char. K, M)	E, H, K, M	B, C, W	E	S	P, R	DAL,MSI,SOA
M55342^09@10#7&	107,000	500 (char. E, H) or 1000 (char. K, M)	E, H, K, M	B, C, W	E	S	P, R	DAL,MSI,SOA
M55342^09@11#0&	110,000	500 (char. E, H) or 1000 (char. K, M)	E, H, K, M	B, C, W	E, H, K	S	P, R	DAL,MSI,SOA
M55342^09@11#3&	113,000	500 (char. E, H) or 1000 (char. K, M)	E, H, K, M	B, C, W	E	S	P, R	DAL,MSI,SOA
M55342^09@11#5&	115,000	500 (char. E, H) or 1000 (char. K, M)	E, H, K, M	B, C, W	E	S	P, R	DAL,MSI,SOA
M55342^09@11#8&	118,000	500 (char. E, H) or 1000 (char. K, M)	E, H, K, M	B, C, W	E	S	P, R	DAL,MSI,SOA
M55342^09@12#0&	120,000	500 (char. E, H) or 1000 (char. K, M)	E, H, K, M	B, C, W	H, K, N	S	P, R	DAL,MSI,SOA
M55342^09@12#1&	121,000	500 (char. E, H) or 1000 (char. K, M)	E, H, K, M	B, C, W	E	S	P, R	DAL,MSI,SOA
M55342^09@12#4&	124,000	500 (char. E, H) or 1000 (char. K, M)	E, H, K, M	B, C, W	E	S	P, R	DAL,MSI,SOA
M55342^09@12#7&	127,000	500 (char. E, H) or 1000 (char. K, M)	E, H, K, M	B, C, W	E	S	P, R	DAL,MSI,SOA
M55342^09@13#0&	130,000	500 (char. E, H) or 1000 (char. K, M)	E, H, K, M	B, C, W	E, H, K	S	P, R	DAL,MSI,SOA
M55342^09@13#3&	133,000	500 (char. E, H) or 1000 (char. K, M)	E, H, K, M	B, C, W	E	S	P, R	DAL,MSI,SOA
M55342^09@13#7&	137,000	500 (char. E, H) or 1000 (char. K, M)	E, H, K, M	B, C, W	E	S	P, R	DAL,MSI,SOA
M55342^09@14#0&	140,000	500 (char. E, H) or 1000 (char. K, M)	E, H, K, M	B, C, W	E	S	P, R	DAL,MSI,SOA
M55342^09@14#3&	143,000	500 (char. E, H) or 1000 (char. K, M)	E, H, K, M	B, C, W	E	S	P, R	DAL,MSI,SOA
M55342^09@14#7&	147,000	500 (char. E, H) or 1000 (char. K, M)	E, H, K, M	B, C, W	E	S	P, R	DAL,MSI,SOA
M55342^09@15#0&	150,000	500 (char. E, H) or 1000 (char. K, M)	E, H, K, M	B, C, W	E, H, K, N	S	P, R	DAL,MSI,SOA
M55342^09@15#4&	154,000	500 (char. E, H) or 1000 (char. K, M)	E, H, K, M	B, C, W	E	S	P, R	DAL,MSI,SOA
M55342^09@15#8&	158,000	500 (char. E, H) or 1000 (char. K, M)	E, H, K, M	B, C, W	E	S	P, R	DAL,MSI,SOA
M55342^09@16#0&	160,000	500 (char. E, H) or 1000 (char. K, M)	E, H, K, M	B, C, W	H, K	S	P, R	DAL,MSI,SOA
M55342^09@16#2&	162,000	500 (char. E, H) or 1000 (char. K, M)	E, H, K, M	B, C, W	E	S	P, R	DAL,MSI,SOA
M55342^09@16#5&	165,000	500 (char. E, H) or 1000 (char. K, M)	E, H, K, M	B, C, W	E	S	P, R	DAL,MSI,SOA
M55342^09@16#9&	169,000	500 (char. E, H) or 1000 (char. K, M)	E, H, K, M	B, C, W	E	S	P, R	DAL,MSI,SOA
M55342^09@17#4&	174,000	500 (char. E, H) or 1000 (char. K, M)	E, H, K, M	B, C, W	E	S	P, R	DAL,MSI,SOA

M55342^09@17#8&	178,000	500 (char. E, H) or 1000 (char. K, M)	E, H, K, M	B, C, W	E	S	P, R	DAL,MSI,SOA
M55342^09@18#0&	180,000	500 (char. E, H) or 1000 (char. K, M)	E, H, K, M	B, C, W	H, K, N	S	P, R	DAL,MSI,SOA
M55342^09@18#2&	182,000	500 (char. E, H) or 1000 (char. K, M)	E, H, K, M	B, C, W	E	S	P, R	DAL,MSI,SOA
M55342^09@18#7&	187,000	500 (char. E, H) or 1000 (char. K, M)	E, H, K, M	B, C, W	E	S	P, R	DAL,MSI,SOA
M55342^09@19#1&	191,000	500 (char. E, H) or 1000 (char. K, M)	E, H, K, M	B, C, W	E	S	P, R	DAL,MSI,SOA
M55342^09@19#6&	196,000	500 (char. E, H) or 1000 (char. K, M)	E, H, K, M	B, C, W	E	S	P, R	DAL,MSI,SOA
M55342^09@20#0&	200,000	500 (char. E, H) or 1000 (char. K, M)	E, H, K, M	B, C, W	E, H, K, N	S	P, R	DAL,MSI,SOA
M55342^09@20#5&	205,000	500 (char. E, H) or 1000 (char. K, M)	E, H, K, M	B, C, W	E	S	P, R	DAL,MSI,SOA
M55342^09@21#0&	210,000	500 (char. E, H) or 1000 (char. K, M)	E, H, K, M	B, C, W	E	S	P, R	DAL,MSI,SOA
M55342^09@21#5&	215,000	500 (char. E, H) or 1000 (char. K, M)	E, H, K, M	B, C, W	E	S	P, R	DAL,MSI,SOA
M55342^09@22#0&	220,000	500 (char. E, H) or 1000 (char. K, M)	E, H, K, M	B, C, W	H, K, N	S	P, R	DAL,MSI,SOA
M55342^09@22#1&	221,000	500 (char. E, H) or 1000 (char. K, M)	E, H, K, M	B, C, W	E	S	P, R	DAL,MSI,SOA
M55342^09@22#6&	226,000	500 (char. E, H) or 1000 (char. K, M)	E, H, K, M	B, C, W	E	S	P, R	DAL,MSI,SOA
M55342^09@23#2&	232,000	500 (char. E, H) or 1000 (char. K, M)	E, H, K, M	B, C, W	E	S	P, R	DAL,MSI,SOA
M55342^09@23#7&	237,000	500 (char. E, H) or 1000 (char. K, M)	E, H, K, M	B, C, W	E	S	P, R	DAL,MSI,SOA
M55342^09@24#0&	240,000	500 (char. E, H) or 1000 (char. K, M)	E, H, K, M	B, C, W	H, K	S	P, R	DAL,MSI,SOA
M55342^09@24#3&	243,000	500 (char. E, H) or 1000 (char. K, M)	E, H, K, M	B, C, W	E	S	P, R	DAL,MSI,SOA
M55342^09@24#9&	249,000	500 (char. E, H) or 1000 (char. K, M)	E, H, K, M	B, C, W	E	S	P, R	DAL,MSI,SOA
M55342^09@25#5&	255,000	500 (char. E, H) or 1000 (char. K, M)	E, H, K, M	B, C, W	E	S	P, R	DAL,MSI,SOA
M55342^09@26#1&	261,000	500 (char. E, H) or 1000 (char. K, M)	E, H, K, M	B, C, W	E	S	P, R	DAL,MSI,SOA
M55342^09@26#7&	267,000	500 (char. E, H) or 1000 (char. K, M)	E, H, K, M	B, C, W	E	S	P, R	DAL,MSI,SOA
M55342^09@27#0&	270,000	500 (char. E, H) or 1000 (char. K, M)	E, H, K, M	B, C, W	H, K, N	S	P, R	DAL,MSI,SOA
M55342^09@27#4&	274,000	500 (char. E, H) or 1000 (char. K, M)	E, H, K, M	B, C, W	E	S	P, R	DAL,MSI,SOA
M55342^09@28#0&	280,000	500 (char. E, H) or 1000 (char. K, M)	E, H, K, M	B, C, W	E	S	P, R	DAL,MSI,SOA
M55342^09@28#7&	287,000	500 (char. E, H) or 1000 (char. K, M)	E, H, K, M	B, C, W	E	S	P, R	DAL,MSI,SOA
M55342^09@29#4&	294,000	500 (char. E, H) or 1000 (char. K, M)	E, H, K, M	B, C, W	E	S	P, R	DAL,MSI,SOA
M55342^09@30#0&	300,000	500 (char. E, H) or 1000 (char. K, M)	E, H, K, M	B, C, W	H, K	S	P, R	DAL,MSI,SOA
M55342^09@30#1&	301,000	500 (char. E, H) or 1000 (char. K, M)	E, H, K, M	B, C, W	E	S	P, R	DAL,MSI,SOA
M55342^09@30#9&	309,000	500 (char. E, H) or 1000 (char. K, M)	E, H, K, M	B, C, W	E	S	P, R	DAL,MSI,SOA
M55342^09@31#6&	316,000	500 (char. E, H) or 1000 (char. K, M)	E, H, K, M	B, C, W	E	S	P, R	DAL,MSI,SOA
M55342^09@32#4&	324,000	500 (char. E, H) or 1000 (char. K, M)	E, H, K, M	B, C, W	E	S	P, R	DAL,MSI,SOA
M55342^09@33#0&	330,000	500 (char. E, H) or 1000 (char. K, M)	E, H, K, M	B, C, W	H, K, N	S	P, R	DAL,MSI,SOA
M55342^09@33#2&	332,000	500 (char. E, H) or 1000 (char. K, M)	E, H, K, M	B, C, W	E	S	P, R	DAL,MSI,SOA
M55342^09@34#0&	340,000	500 (char. E, H) or 1000 (char. K, M)	E, H, K, M	B, C, W	E	S	P, R	DAL,MSI,SOA
M55342^09@34#8&	348,000	500 (char. E, H) or 1000 (char. K, M)	E, H, K, M	B, C, W	E	S	P, R	DAL,MSI,SOA
M55342^09@35#7&	357,000	500 (char. E, H) or 1000 (char. K, M)	E, H, K, M	B, C, W	E	S	P, R	DAL,MSI,SOA
M55342^09@36#0&	360,000	500 (char. E, H) or 1000 (char. K, M)	E, H, K, M	B, C, W	H, K	S	P, R	DAL,MSI,SOA
M55342^09@36#5&	365,000	500 (char. E, H) or 1000 (char. K, M)	E, H, K, M	B, C, W	E	S	P, R	DAL,MSI,SOA
M55342^09@37#4&	374,000	500 (char. E, H) or 1000 (char. K, M)	E, H, K, M	B, C, W	E	S	P, R	DAL,MSI,SOA
M55342^09@38#3&	383,000	500 (char. E, H) or 1000 (char. K, M)	E, H, K, M	B, C, W	E	S	P, R	DAL,MSI,SOA
M55342^09@39#0&	390,000	500 (char. E, H) or 1000 (char. K, M)	E, H, K, M	B, C, W	H, K, N	S	P, R	DAL,MSI,SOA
M55342^09@39#2&	392,000	500 (char. E, H) or 1000 (char. K, M)	E, H, K, M	B, C, W	E	S	P, R	DAL,MSI,SOA
M55342^09@40#2&	402,000	500 (char. E, H) or 1000 (char. K, M)	E, H, K, M	B, C, W	E	S	P, R	DAL,MSI,SOA
M55342^09@41#2&	412,000	500 (char. E, H) or 1000 (char. K, M)	E, H, K, M	B, C, W	E	S	P, R	DAL,MSI,SOA
M55342^09@42#2&	422,000	500 (char. E, H) or 1000 (char. K, M)	E, H, K, M	B, C, W	E	S	P, R	DAL,MSI,SOA
M55342^09@43#0&	430,000	500 (char. E, H) or 1000 (char. K, M)	E, H, K, M	B, C, W	H, K	S	P, R	DAL,MSI,SOA
M55342^09@43#2&	432,000	500 (char. E, H) or 1000 (char. K, M)	E, H, K, M	B, C, W	E	S	P, R	DAL,MSI,SOA

M55342^09@44#2&	442,000	500 (char. E, H) or 1000 (char. K, M)	E, H, K, M	B, C, W	E	S	P, R	DAL,MSI,SOA
M55342^09@45#3&	453,000	500 (char. E, H) or 1000 (char. K, M)	E, H, K, M	B, C, W	E	S	P, R	DAL,MSI,SOA
M55342^09@46#4&	464,000	500 (char. E, H) or 1000 (char. K, M)	E, H, K, M	B, C, W	E	S	P, R	DAL,MSI,SOA
M55342^09@47#0&	470,000	500 (char. E, H) or 1000 (char. K, M)	E, H, K, M	B, C, W	H, K, N	S	P, R	DAL,MSI,SOA
M55342^09@47#5&	475,000	500 (char. E, H) or 1000 (char. K, M)	E, H, K, M	B, C, W	E	S	P, R	DAL,MSI,SOA
M55342^09@48#7&	487,000	500 (char. E, H) or 1000 (char. K, M)	E, H, K, M	B, C, W	E	S	P, R	DAL,MSI,SOA
M55342^09@49#9&	499,000	500 (char. E, H) or 1000 (char. K, M)	E, H, K, M	B, C, W	E	S	P, R	DAL,MSI,SOA
M55342^09@51#0&	510,000	500 (char. E, H) or 1000 (char. K, M)	E, H, K, M	B, C, W	H, K	S	P, R	DAL,MSI,SOA
M55342^09@51#1&	511,000	500 (char. E, H) or 1000 (char. K, M)	E, H, K, M	B, C, W	E	S	P, R	DAL,MSI,SOA
M55342^09@52#3&	523,000	500 (char. E, H) or 1000 (char. K, M)	E, H, K, M	B, C, W	E	S	P, R	DAL,MSI,SOA
M55342^09@53#6&	536,000	500 (char. E, H) or 1000 (char. K, M)	E, H, K, M	B, C, W	E	S	P, R	DAL,MSI,SOA
M55342^09@54#9&	549,000	500 (char. E, H) or 1000 (char. K, M)	E, H, K, M	B, C, W	E	S	P, R	DAL,MSI,SOA
M55342^09@56#0&	560,000	500 (char. E, H) or 1000 (char. K, M)	E, H, K, M	B, C, W	H, K, N	S	P, R	DAL,MSI,SOA
M55342^09@56#2&	562,000	500 (char. E, H) or 1000 (char. K, M)	E, H, K, M	B, C, W	E	S	P, R	DAL,MSI,SOA
M55342^09@57#6&	576,000	500 (char. E, H) or 1000 (char. K, M)	E, H, K, M	B, C, W	E	S	P, R	DAL,MSI,SOA
M55342^09@59#0&	590,000	500 (char. E, H) or 1000 (char. K, M)	E, H, K, M	B, C, W	E	S	P, R	DAL,MSI,SOA
M55342^09@60#4&	604,000	500 (char. E, H) or 1000 (char. K, M)	E, H, K, M	B, C, W	E	S	P, R	DAL,MSI,SOA
M55342^09@61#9&	619,000	500 (char. E, H) or 1000 (char. K, M)	E, H, K, M	B, C, W	E	S	P, R	DAL,MSI,SOA
M55342^09@62#0&	620,000	500 (char. E, H) or 1000 (char. K, M)	E, H, K, M	B, C, W	H, K	S	P, R	DAL,MSI,SOA
M55342^09@63#4&	634,000	500 (char. E, H) or 1000 (char. K, M)	E, H, K, M	B, C, W	E	S	P, R	DAL,MSI,SOA
M55342^09@64#9&	649,000	500 (char. E, H) or 1000 (char. K, M)	E, H, K, M	B, C, W	E	S	P, R	DAL,MSI,SOA
M55342^09@66#5&	665,000	500 (char. E, H) or 1000 (char. K, M)	E, H, K, M	B, C, W	E	S	P, R	DAL,MSI,SOA
M55342^09@68#0&	680,000	500 (char. E, H) or 1000 (char. K, M)	E, H, K, M	B, C, W	H, K, N	S	P, R	DAL,MSI,SOA
M55342^09@68#1&	681,000	500 (char. E, H) or 1000 (char. K, M)	E, H, K, M	B, C, W	E	S	P, R	DAL,MSI,SOA
M55342^09@69#8&	698,000	500 (char. E, H) or 1000 (char. K, M)	E, H, K, M	B, C, W	E	S	P, R	DAL,MSI,SOA
M55342^09@71#5&	715,000	500 (char. E, H) or 1000 (char. K, M)	E, H, K, M	B, C, W	E	S	P, R	DAL,MSI,SOA
M55342^09@73#2&	732,000	500 (char. E, H) or 1000 (char. K, M)	E, H, K, M	B, C, W	E	S	P, R	DAL,MSI,SOA
M55342^09@75#0&	750,000	500 (char. E, H) or 1000 (char. K, M)	E, H, K, M	B, C, W	E, H, K	S	P, R	DAL,MSI,SOA
M55342^09@76#8&	768,000	500 (char. E, H) or 1000 (char. K, M)	E, H, K, M	B, C, W	E	S	P, R	DAL,MSI,SOA
M55342^09@78#7&	787,000	500 (char. E, H) or 1000 (char. K, M)	E, H, K, M	B, C, W	E	S	P, R	DAL,MSI,SOA
M55342^09@80#6&	806,000	500 (char. E, H) or 1000 (char. K, M)	E, H, K, M	B, C, W	E	S	P, R	DAL,MSI,SOA
M55342^09@82#0&	820,000	500 (char. E, H) or 1000 (char. K, M)	E, H, K, M	B, C, W	H, K, N	S	P, R	DAL,MSI,SOA
M55342^09@82#5&	825,000	500 (char. E, H) or 1000 (char. K, M)	E, H, K, M	B, C, W	E	S	P, R	DAL,MSI,SOA
M55342^09@84#5&	845,000	500 (char. E, H) or 1000 (char. K, M)	E, H, K, M	B, C, W	E	S	P, R	DAL,MSI,SOA
M55342^09@86#6&	866,000	500 (char. E, H) or 1000 (char. K, M)	E, H, K, M	B, C, W	E	S	P, R	DAL,MSI,SOA
M55342^09@88#7&	887,000	500 (char. E, H) or 1000 (char. K, M)	E, H, K, M	B, C, W	E	S	P, R	DAL,MSI,SOA
M55342^09@90#9&	909,000	500 (char. E, H) or 1000 (char. K, M)	E, H, K, M	B, C, W	E	S	P, R	DAL,MSI,SOA
M55342^09@91#0&	910,000	500 (char. E, H) or 1000 (char. K, M)	E, H, K, M	B, C, W	H, K	S	P, R	DAL,MSI,SOA
M55342^09@93#1&	931,000	500 (char. E, H) or 1000 (char. K, M)	E, H, K, M	B, C, W	E	S	P, R	DAL,MSI,SOA
M55342^09@95#3&	953,000	500 (char. E, H) or 1000 (char. K, M)	E, H, K, M	B, C, W	E	S	P, R	DAL,MSI,SOA
M55342^09@97#6&	976,000	500 (char. E, H) or 1000 (char. K, M)	E, H, K, M	B, C, W	E	S	P, R	DAL,MSI,SOA
M55342^09@1#00&	1,000,000	500 (char. E, H) or 1000 (char. K, M)	E, H, K, M	B, C, W	F, T, L, P	S	P, R	DAL,MSI,SOA
M55342^09@1#02&	1,020,000	500 (char. E, H) or 1000 (char. K, M)	E, H, K, M	B, C, W	F	S	P, R	DAL,MSI,SOA
M55342^09@1#05&	1,050,000	500 (char. E, H) or 1000 (char. K, M)	E, H, K, M	B, C, W	F	S	P, R	DAL,MSI,SOA
M55342^09@1#07&	1,070,000	500 (char. E, H) or 1000 (char. K, M)	E, H, K, M	B, C, W	F	S	P, R	DAL,MSI,SOA
M55342^09@1#10&	1,100,000	500 (char. E, H) or 1000 (char. K, M)	E, H, K, M	B, C, W	F, T, L	S	P, R	DAL,MSI,SOA
M55342^09@1#13&	1,130,000	500 (char. E, H) or 1000 (char. K, M)	E, H, K, M	B, C, W	F	S	P, R	DAL,MSI,SOA

M55342^09@1#15&	1,150,000	500 (char. E, H) or 1000 (char. K, M)	E, H, K, M	B, C, W	F	S	P, R	DAL,MSI,SOA
M55342^09@1#18&	1,180,000	500 (char. E, H) or 1000 (char. K, M)	E, H, K, M	B, C, W	F	S	P, R	DAL,MSI,SOA
M55342^09@1#20&	1,200,000	500 (char. E, H) or 1000 (char. K, M)	E, H, K, M	B, C, W	T, L, P	S	P, R	DAL,MSI,SOA
M55342^09@1#21&	1,210,000	500 (char. E, H) or 1000 (char. K, M)	E, H, K, M	B, C, W	F	S	P, R	DAL,MSI,SOA
M55342^09@1#24&	1,240,000	500 (char. E, H) or 1000 (char. K, M)	E, H, K, M	B, C, W	F	S	P, R	DAL,MSI,SOA
M55342^09@1#27&	1,270,000	500 (char. E, H) or 1000 (char. K, M)	E, H, K, M	B, C, W	F	S	P, R	DAL,MSI,SOA
M55342^09@1#30&	1,300,000	500 (char. E, H) or 1000 (char. K, M)	E, H, K, M	B, C, W	F, T, L	S	P, R	DAL,MSI,SOA
M55342^09@1#33&	1,330,000	500 (char. E, H) or 1000 (char. K, M)	E, H, K, M	B, C, W	F	S	P, R	DAL,MSI,SOA
M55342^09@1#37&	1,370,000	500 (char. E, H) or 1000 (char. K, M)	E, H, K, M	B, C, W	F	S	P, R	DAL,MSI,SOA
M55342^09@1#40&	1,400,000	500 (char. E, H) or 1000 (char. K, M)	E, H, K, M	B, C, W	F	S	P, R	DAL,MSI,SOA
M55342^09@1#43&	1,430,000	500 (char. E, H) or 1000 (char. K, M)	E, H, K, M	B, C, W	F	S	P, R	DAL,MSI,SOA
M55342^09@1#47&	1,470,000	500 (char. E, H) or 1000 (char. K, M)	E, H, K, M	B, C, W	F	S	P, R	DAL,MSI,SOA
M55342^09@1#50&	1,500,000	500 (char. E, H) or 1000 (char. K, M)	E, H, K, M	B, C, W	F, T, L, P	S	P, R	DAL,MSI,SOA
M55342^09@1#54&	1,540,000	500 (char. E, H) or 1000 (char. K, M)	E, H, K, M	B, C, W	F	S	P, R	DAL,MSI,SOA
M55342^09@1#58&	1,580,000	500 (char. E, H) or 1000 (char. K, M)	E, H, K, M	B, C, W	F	S	P, R	DAL,MSI,SOA
M55342^09@1#60&	1,600,000	500 (char. E, H) or 1000 (char. K, M)	E, H, K, M	B, C, W	T, L	S	P, R	DAL,MSI,SOA
M55342^09@1#62&	1,620,000	500 (char. E, H) or 1000 (char. K, M)	E, H, K, M	B, C, W	F	S	P, R	DAL,MSI,SOA
M55342^09@1#65&	1,650,000	500 (char. E, H) or 1000 (char. K, M)	E, H, K, M	B, C, W	F	S	P, R	DAL,MSI,SOA
M55342^09@1#69&	1,690,000	500 (char. E, H) or 1000 (char. K, M)	E, H, K, M	B, C, W	F	S	P, R	DAL,MSI,SOA
M55342^09@1#74&	1,740,000	500 (char. E, H) or 1000 (char. K, M)	E, H, K, M	B, C, W	F	S	P, R	DAL,MSI,SOA
M55342^09@1#78&	1,780,000	500 (char. E, H) or 1000 (char. K, M)	E, H, K, M	B, C, W	F	S	P, R	DAL,MSI,SOA
M55342^09@1#80&	1,800,000	500 (char. E, H) or 1000 (char. K, M)	E, H, K, M	B, C, W	T, L, P	S	P, R	DAL,MSI,SOA
M55342^09@1#82&	1,820,000	500 (char. E, H) or 1000 (char. K, M)	E, H, K, M	B, C, W	F	S	P, R	DAL,MSI,SOA
M55342^09@1#87&	1,870,000	500 (char. E, H) or 1000 (char. K, M)	E, H, K, M	B, C, W	F	S	P, R	DAL,MSI,SOA
M55342^09@1#91&	1,910,000	500 (char. E, H) or 1000 (char. K, M)	E, H, K, M	B, C, W	F	S	P, R	DAL,MSI,SOA
M55342^09@1#96&	1,960,000	500 (char. E, H) or 1000 (char. K, M)	E, H, K, M	B, C, W	F	S	P, R	DAL,MSI,SOA
M55342^09@2#00&	2,000,000	500 (char. E, H) or 1000 (char. K, M)	E, H, K, M	B, C, W	F, T, L, P	S	P, R	DAL,MSI,SOA
M55342^09@2#05&	2,050,000	500 (char. E, H) or 1000 (char. K, M)	E, H, K, M	B, C, W	F	S	P, R	DAL,MSI,SOA
M55342^09@2#10&	2,100,000	500 (char. E, H) or 1000 (char. K, M)	E, H, K, M	B, C, W	F	S	P, R	DAL,MSI,SOA
M55342^09@2#15&	2,150,000	500 (char. E, H) or 1000 (char. K, M)	E, H, K, M	B, C, W	F	S	P, R	DAL,MSI,SOA
M55342^09@2#20&	2,200,000	500 (char. E, H) or 1000 (char. K, M)	E, H, K, M	B, C, W	T, L, P	S	P, R	DAL,MSI,SOA
M55342^09@2#21&	2,210,000	500 (char. E, H) or 1000 (char. K, M)	E, H, K, M	B, C, W	F	S	P, R	DAL,MSI,SOA
M55342^09@2#26&	2,260,000	500 (char. E, H) or 1000 (char. K, M)	E, H, K, M	B, C, W	F	S	P, R	DAL,MSI,SOA
M55342^09@2#32&	2,320,000	500 (char. E, H) or 1000 (char. K, M)	E, H, K, M	B, C, W	F	S	P, R	DAL,MSI,SOA
M55342^09@2#37&	2,370,000	500 (char. E, H) or 1000 (char. K, M)	E, H, K, M	B, C, W	F	S	P, R	DAL,MSI,SOA
M55342^09@2#40&	2,400,000	500 (char. E, H) or 1000 (char. K, M)	E, H, K, M	B, C, W	T, L	S	P, R	DAL,MSI,SOA
M55342^09@2#43&	2,430,000	500 (char. E, H) or 1000 (char. K, M)	E, H, K, M	B, C, W	F	S	P, R	DAL,MSI,SOA
M55342^09@2#49&	2,490,000	500 (char. E, H) or 1000 (char. K, M)	E, H, K, M	B, C, W	F	S	P, R	DAL,MSI,SOA
M55342^09@2#55&	2,550,000	500 (char. E, H) or 1000 (char. K, M)	E, H, K, M	B, C, W	F	S	P, R	DAL,MSI,SOA
M55342^09@2#61&	2,610,000	500 (char. E, H) or 1000 (char. K, M)	E, H, K, M	B, C, W	F	S	P, R	DAL,MSI,SOA
M55342^09@2#67&	2,670,000	500 (char. E, H) or 1000 (char. K, M)	E, H, K, M	B, C, W	F	S	P, R	DAL,MSI,SOA
M55342^09@2#70&	2,700,000	500 (char. E, H) or 1000 (char. K, M)	E, H, K, M	B, C, W	T, L, P	S	P, R	DAL,MSI,SOA
M55342^09@2#74&	2,740,000	500 (char. E, H) or 1000 (char. K, M)	E, H, K, M	B, C, W	F	S	P, R	DAL,MSI,SOA
M55342^09@2#80&	2,800,000	500 (char. E, H) or 1000 (char. K, M)	E, H, K, M	B, C, W	F	S	P, R	DAL,MSI,SOA
M55342^09@2#87&	2,870,000	500 (char. E, H) or 1000 (char. K, M)	E, H, K, M	B, C, W	F	S	P, R	DAL,MSI,SOA
M55342^09@2#94&	2,940,000	500 (char. E, H) or 1000 (char. K, M)	E, H, K, M	B, C, W	F	S	P, R	DAL,MSI,SOA
M55342^09@3#00&	3,000,000	500 (char. E, H) or 1000 (char. K, M)	E, H, K, M	B, C, W	T, L	S	P, R	DAL,MSI,SOA

M55342^09@3#01&	3,010,000	500 (char. E, H) or 1000 (char. K, M)	E, H, K, M	B, C, W	F	S	P, R	DAL,MSI,SOA
M55342^09@3#09&	3,090,000	500 (char. E, H) or 1000 (char. K, M)	E, H, K, M	B, C, W	F	S	P, R	DAL,MSI,SOA
M55342^09@3#16&	3,160,000	500 (char. E, H) or 1000 (char. K, M)	E, H, K, M	B, C, W	F	S	P, R	DAL,MSI,SOA
M55342^09@3#24&	3,240,000	500 (char. E, H) or 1000 (char. K, M)	E, H, K, M	B, C, W	F	S	P, R	DAL,MSI,SOA
M55342^09@3#30&	3,300,000	500 (char. E, H) or 1000 (char. K, M)	E, H, K, M	B, C, W	T, L, P	S	P, R	DAL,MSI,SOA
M55342^09@3#32&	3,320,000	500 (char. E, H) or 1000 (char. K, M)	E, H, K, M	B, C, W	F	S	P, R	DAL,MSI,SOA
M55342^09@3#40&	3,400,000	500 (char. E, H) or 1000 (char. K, M)	E, H, K, M	B, C, W	F	S	P, R	DAL,MSI,SOA
M55342^09@3#48&	3,480,000	500 (char. E, H) or 1000 (char. K, M)	E, H, K, M	B, C, W	F	S	P, R	DAL,MSI,SOA
M55342^09@3#57&	3,570,000	500 (char. E, H) or 1000 (char. K, M)	E, H, K, M	B, C, W	F	S	P, R	DAL,MSI,SOA
M55342^09@3#60&	3,600,000	500 (char. E, H) or 1000 (char. K, M)	E, H, K, M	B, C, W	T, L	S	P, R	DAL,MSI,SOA
M55342^09@3#65&	3,650,000	500 (char. E, H) or 1000 (char. K, M)	E, H, K, M	B, C, W	F	S	P, R	DAL,MSI,SOA
M55342^09@3#74&	3,740,000	500 (char. E, H) or 1000 (char. K, M)	E, H, K, M	B, C, W	F	S	P, R	DAL,MSI,SOA
M55342^09@3#83&	3,830,000	500 (char. E, H) or 1000 (char. K, M)	E, H, K, M	B, C, W	F	S	P, R	DAL,MSI,SOA
M55342^09@3#90&	3,900,000	500 (char. E, H) or 1000 (char. K, M)	E, H, K, M	B, C, W	T, L, P	S	P, R	DAL,MSI,SOA
M55342^09@3#92&	3,920,000	500 (char. E, H) or 1000 (char. K, M)	E, H, K, M	B, C, W	F	S	P, R	DAL,MSI,SOA
M55342^09@4#02&	4,020,000	500 (char. E, H) or 1000 (char. K, M)	E, H, K, M	B, C, W	F	S	P, R	DAL,MSI,SOA
M55342^09@4#12&	4,120,000	500 (char. E, H) or 1000 (char. K, M)	E, H, K, M	B, C, W	F	S	P, R	DAL,MSI,SOA
M55342^09@4#22&	4,220,000	500 (char. E, H) or 1000 (char. K, M)	E, H, K, M	B, C, W	F	S	P, R	DAL,MSI,SOA
M55342^09@4#30&	4,300,000	500 (char. E, H) or 1000 (char. K, M)	E, H, K, M	B, C, W	T, L	S	P, R	DAL,MSI,SOA
M55342^09@4#32&	4,320,000	500 (char. E, H) or 1000 (char. K, M)	E, H, K, M	B, C, W	F	S	P, R	DAL,MSI,SOA
M55342^09@4#42&	4,420,000	500 (char. E, H) or 1000 (char. K, M)	E, H, K, M	B, C, W	F	S	P, R	DAL,MSI,SOA
M55342^09@4#53&	4,530,000	500 (char. E, H) or 1000 (char. K, M)	E, H, K, M	B, C, W	F	S	P, R	DAL,MSI,SOA
M55342^09@4#64&	4,640,000	500 (char. E, H) or 1000 (char. K, M)	E, H, K, M	B, C, W	F	S	P, R	DAL,MSI,SOA
M55342^09@4#70&	4,700,000	500 (char. E, H) or 1000 (char. K, M)	E, H, K, M	B, C, W	T, L, P	S	P, R	DAL,MSI,SOA
M55342^09@4#75&	4,750,000	500 (char. E, H) or 1000 (char. K, M)	E, H, K, M	B, C, W	F	S	P, R	DAL,MSI,SOA
M55342^09@4#87&	4,870,000	500 (char. E, H) or 1000 (char. K, M)	E, H, K, M	B, C, W	F	S	P, R	DAL,MSI,SOA
M55342^09@4#99&	4,990,000	500 (char. E, H) or 1000 (char. K, M)	E, H, K, M	B, C, W	F	S	P, R	DAL,MSI,SOA
M55342^09@5#10&	5,100,000	500 (char. E, H) or 1000 (char. K, M)	E, H, K, M	B, C, W	T, L	S	P, R	DAL,MSI,SOA
M55342^09@5#11&	5,110,000	500 (char. E, H) or 1000 (char. K, M)	E, H, K, M	B, C, W	F	S	P, R	DAL,MSI,SOA
M55342^09@5#23&	5,230,000	500 (char. E, H) or 1000 (char. K, M)	E, H, K, M	B, C, W	F	S	P, R	DAL,MSI,SOA
M55342^09@5#36&	5,360,000	500 (char. E, H) or 1000 (char. K, M)	E, H, K, M	B, C, W	F	S	P, R	DAL,MSI,SOA
M55342^09@5#49&	5,490,000	500 (char. E, H) or 1000 (char. K, M)	E, H, K, M	B, C, W	F	S	P, R	DAL,MSI,SOA
M55342^09@5#60&	5,600,000	500 (char. E, H) or 1000 (char. K, M)	E, H, K, M	B, C, W	T, L, P	S	P, R	DAL,MSI,SOA
M55342^09@5#62&	5,620,000	500 (char. E, H) or 1000 (char. K, M)	E, H, K, M	B, C, W	F	S	P, R	DAL,MSI,SOA
M55342^09@5#76&	5,760,000	500 (char. E, H) or 1000 (char. K, M)	E, H, K, M	B, C, W	F	S	P, R	DAL,MSI,SOA
M55342^09@5#90&	5,900,000	500 (char. E, H) or 1000 (char. K, M)	E, H, K, M	B, C, W	F	S	P, R	DAL,MSI,SOA
M55342^09@6#04&	6,040,000	500 (char. E, H) or 1000 (char. K, M)	E, H, K, M	B, C, W	F	S	P, R	DAL,MSI,SOA
M55342^09@6#19&	6,190,000	500 (char. E, H) or 1000 (char. K, M)	E, H, K, M	B, C, W	F	S	P, R	DAL,MSI,SOA
M55342^09@6#20&	6,200,000	500 (char. E, H) or 1000 (char. K, M)	E, H, K, M	B, C, W	T, L	S	P, R	DAL,MSI,SOA
M55342^09@6#34&	6,340,000	500 (char. E, H) or 1000 (char. K, M)	E, H, K, M	B, C, W	F	S	P, R	DAL,MSI,SOA
M55342^09@6#49&	6,490,000	500 (char. E, H) or 1000 (char. K, M)	E, H, K, M	B, C, W	F	S	P, R	DAL,MSI,SOA
M55342^09@6#65&	6,650,000	500 (char. E, H) or 1000 (char. K, M)	E, H, K, M	B, C, W	F	S	P, R	DAL,MSI,SOA
M55342^09@6#80&	6,800,000	500 (char. E, H) or 1000 (char. K, M)	E, H, K, M	B, C, W	T, L, P	S	P, R	DAL,MSI,SOA
M55342^09@6#81&	6,810,000	500 (char. E, H) or 1000 (char. K, M)	E, H, K, M	B, C, W	F	S	P, R	DAL,MSI,SOA
M55342^09@6#98&	6,980,000	500 (char. E, H) or 1000 (char. K, M)	E, H, K, M	B, C, W	F	S	P, R	DAL,MSI,SOA
M55342^09@7#15&	7,150,000	500 (char. E, H) or 1000 (char. K, M)	E, H, K, M	B, C, W	F	S	P, R	DAL,MSI,SOA
M55342^09@7#32&	7,320,000	500 (char. E, H) or 1000 (char. K, M)	E, H, K, M	B, C, W	F	S	P, R	DAL,MSI,SOA

M55342^09@7#50&	7,500,000	500 (char. E, H) or 1000 (char. K, M)	E, H, K, M	B, C, W	F, T, L	S	P, R	DAL,MSI,SOA
M55342^09@7#68&	7,680,000	500 (char. E, H) or 1000 (char. K, M)	E, H, K, M	B, C, W	F	S	P, R	DAL,MSI,SOA
M55342^09@7#87&	7,870,000	500 (char. E, H) or 1000 (char. K, M)	E, H, K, M	B, C, W	F	S	P, R	DAL,MSI,SOA
M55342^09@8#06&	8,060,000	500 (char. E, H) or 1000 (char. K, M)	E, H, K, M	B, C, W	F	S	P, R	DAL,MSI,SOA
M55342^09@8#20&	8,200,000	500 (char. E, H) or 1000 (char. K, M)	E, H, K, M	B, C, W	T, L, P	S	P, R	DAL,MSI,SOA
M55342^09@8#25&	8,250,000	500 (char. E, H) or 1000 (char. K, M)	E, H, K, M	B, C, W	F	S	P, R	DAL,MSI,SOA
M55342^09@8#45&	8,450,000	500 (char. E, H) or 1000 (char. K, M)	E, H, K, M	B, C, W	F	S	P, R	DAL,MSI,SOA
M55342^09@8#66&	8,660,000	500 (char. E, H) or 1000 (char. K, M)	E, H, K, M	B, C, W	F	S	P, R	DAL,MSI,SOA
M55342^09@8#87&	8,870,000	500 (char. E, H) or 1000 (char. K, M)	E, H, K, M	B, C, W	F	S	P, R	DAL,MSI,SOA
M55342^09@9#09&	9,090,000	500 (char. E, H) or 1000 (char. K, M)	E, H, K, M	B, C, W	F	S	P, R	DAL,MSI,SOA
M55342^09@9#10&	9,100,000	500 (char. E, H) or 1000 (char. K, M)	E, H, K, M	B, C, W	T, L	S	P, R	DAL,MSI,SOA
M55342^09@9#31&	9,310,000	500 (char. E, H) or 1000 (char. K, M)	E, H, K, M	B, C, W	F	S	P, R	DAL,MSI,SOA
M55342^09@9#53&	9,530,000	500 (char. E, H) or 1000 (char. K, M)	E, H, K, M	B, C, W	F	S	P, R	DAL,MSI,SOA
M55342^09@9#76&	9,760,000	500 (char. E, H) or 1000 (char. K, M)	E, H, K, M	B, C, W	F	S	P, R	DAL,MSI,SOA
M55342^09@10#0&	10,000,000	500 (char. E, H) or 1000 (char. K, M)	E, H, K, M	B, C, W	F, T, L, P	S	P, R	DAL,MSI,SOA
M55342^09@10#2&	10,200,000	500 (char. E, H) or 1000 (char. K, M)	E, H, K, M	B, C, W	F	S	P, R	DAL,MSI,SOA
M55342^09@10#5&	10,500,000	500 (char. E, H) or 1000 (char. K, M)	E, H, K, M	B, C, W	F	S	P, R	DAL,MSI,SOA
M55342^09@10#7&	10,700,000	500 (char. E, H) or 1000 (char. K, M)	E, H, K, M	B, C, W	F	S	P, R	DAL,MSI,SOA
M55342^09@11#0&	11,000,000	500 (char. E, H) or 1000 (char. K, M)	E, H, K, M	B, C, W	F, T, L	S	P, R	DAL,MSI,SOA
M55342^09@11#3&	11,300,000	500 (char. E, H) or 1000 (char. K, M)	E, H, K, M	B, C, W	F	S	P, R	DAL,MSI,SOA
M55342^09@11#5&	11,500,000	500 (char. E, H) or 1000 (char. K, M)	E, H, K, M	B, C, W	F	S	P, R	DAL,MSI,SOA
M55342^09@11#8&	11,800,000	500 (char. E, H) or 1000 (char. K, M)	E, H, K, M	B, C, W	F	S	P, R	DAL,MSI,SOA
M55342^09@12#0&	12,000,000	500 (char. E, H) or 1000 (char. K, M)	E, H, K, M	B, C, W	T, L, P	S	P, R	DAL,MSI,SOA
M55342^09@12#1&	12,100,000	500 (char. E, H) or 1000 (char. K, M)	E, H, K, M	B, C, W	F	S	P, R	DAL,MSI,SOA
M55342^09@12#4&	12,400,000	500 (char. E, H) or 1000 (char. K, M)	E, H, K, M	B, C, W	F	S	P, R	DAL,MSI,SOA
M55342^09@12#7&	12,700,000	500 (char. E, H) or 1000 (char. K, M)	E, H, K, M	B, C, W	F	S	P, R	DAL,MSI,SOA
M55342^09@13#0&	13,000,000	500 (char. E, H) or 1000 (char. K, M)	E, H, K, M	B, C, W	F, T, L	S	P, R	DAL,MSI,SOA
M55342^09@13#3&	13,300,000	500 (char. E, H) or 1000 (char. K, M)	E, H, K, M	B, C, W	F	S	P, R	DAL,MSI,SOA
M55342^09@13#7&	13,700,000	500 (char. E, H) or 1000 (char. K, M)	E, H, K, M	B, C, W	F	S	P, R	DAL,MSI,SOA
M55342^09@14#0&	14,000,000	500 (char. E, H) or 1000 (char. K, M)	E, H, K, M	B, C, W	F	S	P, R	DAL,MSI,SOA
M55342^09@14#3&	14,300,000	500 (char. E, H) or 1000 (char. K, M)	E, H, K, M	B, C, W	F	S	P, R	DAL,MSI,SOA
M55342^09@14#7&	14,700,000	500 (char. E, H) or 1000 (char. K, M)	E, H, K, M	B, C, W	F	S	P, R	DAL,MSI,SOA
M55342^09@15#0&	15,000,000	500 (char. E, H) or 1000 (char. K, M)	E, H, K, M	B, C, W	F, T, L, P	S	P, R	DAL,MSI,SOA

RM2512 RESISTORS

DECADE BREAKDOWN

Click on the link below to see the associated parts selection listing:

Resistance Range
5.60 Ohms through 9.76 Ohms
10.0 Ohms through 97.6 Ohms
100 Ohms through 976 Ohms
1,000 Ohms through 9,760 Ohms
10,000 Ohms through 97,600 Ohms
100,000 Ohms through 976,000 Ohms

1,000,000 Ohms through 9,760,000 Ohms
10,000,000 Ohms through 15,000,000 Ohms

MIL-PRF-55342/9 (RM2512) Film Chip Resistors: 5.60 Ohms Through 9.76 Ohms

	Resistance	Power	Char.	Term.	Res. Tol./	Level 1	Level 2	
Part Number	Value (Ohms)	Rating (mW)	(^)	Type (@)	Multiplier (#)	FRL (&)	FRL (&)	Manufacturer
M55342^09@5#60&	5.60	500 (char. E, H) or 1000 (char. K, M)	E, H, K, M	B, C, W	G, J, M	S, T	P, R	DAL,MSI,SOA
M55342^09@5#62&	5.62	500 (char. E, H) or 1000 (char. K, M)	E, H, K, M	B, C, W	D	S, T	P, R	DAL,MSI,SOA
M55342^09@5#76&	5.76	500 (char. E, H) or 1000 (char. K, M)	E, H, K, M	B, C, W	D	S, T	P, R	DAL,MSI,SOA
M55342^09@5#90&	5.90	500 (char. E, H) or 1000 (char. K, M)	E, H, K, M	B, C, W	D	S, T	P, R	DAL,MSI,SOA
M55342^09@6#04&	6.04	500 (char. E, H) or 1000 (char. K, M)	E, H, K, M	B, C, W	D	S, T	P, R	DAL,MSI,SOA
M55342^09@6#19&	6.19	500 (char. E, H) or 1000 (char. K, M)	E, H, K, M	B, C, W	D	S, T	P, R	DAL,MSI,SOA
M55342^09@6#20&	6.20	500 (char. E, H) or 1000 (char. K, M)	E, H, K, M	B, C, W	G, J	S, T	P, R	DAL,MSI,SOA
M55342^09@6#34&	6.34	500 (char. E, H) or 1000 (char. K, M)	E, H, K, M	B, C, W	D	S, T	P, R	DAL,MSI,SOA
	Resistance	Power	Char.	Term.	Res. Tol./	Level 1	Level 2	
Part Number	Value (Ohms)	Rating (mW)	(^)	Type (@)	Multiplier (#)	FRL (&)	FRL (&)	Manufacturer
M55342^09@6#49&	6.49	500 (char. E, H) or 1000 (char. K, M)	E, H, K, M	B, C, W	D	S, T	P, R	DAL,MSI,SOA
M55342^09@6#65&	6.65	500 (char. E, H) or 1000 (char. K, M)	E, H, K, M	B, C, W	D	S, T	P, R	DAL,MSI,SOA
M55342^09@6#80&	6.80	500 (char. E, H) or 1000 (char. K, M)	E, H, K, M	B, C, W	G, J, M	S, T	P, R	DAL,MSI,SOA
M55342^09@6#81&	6.81	500 (char. E, H) or 1000 (char. K, M)	E, H, K, M	B, C, W	D	S, T	P, R	DAL,MSI,SOA
M55342^09@6#98&	6.98	500 (char. E, H) or 1000 (char. K, M)	E, H, K, M	B, C, W	D	S, T	P, R	DAL,MSI,SOA
M55342^09@7#15&	7.15	500 (char. E, H) or 1000 (char. K, M)	E, H, K, M	B, C, W	D	S, T	P, R	DAL,MSI,SOA
M55342^09@7#32&	7.32	500 (char. E, H) or 1000 (char. K, M)	E, H, K, M	B, C, W	D	S, T	P, R	DAL,MSI,SOA
M55342^09@7#50&	7.50	500 (char. E, H) or 1000 (char. K, M)	E, H, K, M	B, C, W	D, G, J	S, T	P, R	DAL,MSI,SOA
	Resistance	Power	Char.	Term.	Res. Tol./	Level 1	Level 2	
Part Number	Value (Ohms)	Rating (mW)	(^)	Type (@)	Multiplier (#)	FRL (&)	FRL (&)	Manufacturer
M55342^09@7#68&	7.68	500 (char. E, H) or 1000 (char. K, M)	E, H, K, M	B, C, W	D	S, T	P, R	DAL,MSI,SOA
M55342^09@7#87&	7.87	500 (char. E, H) or 1000 (char. K, M)	E, H, K, M	B, C, W	D	S, T	P, R	DAL,MSI,SOA
M55342^09@8#06&	8.06	500 (char. E, H) or 1000 (char. K, M)	E, H, K, M	B, C, W	D	S, T	P, R	DAL,MSI,SOA
M55342^09@8#20&	8.20	500 (char. E, H) or 1000 (char. K, M)	E, H, K, M	B, C, W	G, J, M	S, T	P, R	DAL,MSI,SOA
M55342^09@8#25&	8.25	500 (char. E, H) or 1000 (char. K, M)	E, H, K, M	B, C, W	D	S, T	P, R	DAL,MSI,SOA
M55342^09@8#45&	8.45	500 (char. E, H) or 1000 (char. K, M)	E, H, K, M	B, C, W	D	S, T	P, R	DAL,MSI,SOA
M55342^09@8#66&	8.66	500 (char. E, H) or 1000 (char. K, M)	E, H, K, M	B, C, W	D	S, T	P, R	DAL,MSI,SOA
M55342^09@8#87&	8.87	500 (char. E, H) or 1000 (char. K, M)	E, H, K, M	B, C, W	D	S, T	P, R	DAL,MSI,SOA
M55342^09@9#09&	9.09	500 (char. E, H) or 1000 (char. K, M)	E, H, K, M	B, C, W	D	S, T	P, R	DAL,MSI,SOA
	Resistance	Power	Char.	Term.	Res. Tol./	Level 1	Level 2	
Part Number	Value (Ohms)	Rating (mW)	(^)	Type (@)	Multiplier (#)	FRL (&)	FRL (&)	Manufacturer
M55342^09@9#10&	9.10	500 (char. E, H) or 1000 (char. K, M)	E, H, K, M	B, C, W	G, J	S, T	P, R	DAL,MSI,SOA
M55342^09@9#31&	9.31	500 (char. E, H) or 1000 (char. K, M)	E, H, K, M	B, C, W	D	S, T	P, R	DAL,MSI,SOA
M55342^09@9#53&	9.53	500 (char. E, H) or 1000 (char. K, M)	E, H, K, M	B, C, W	D	S, T	P, R	DAL,MSI,SOA
M55342^09@9#76&	9.76	500 (char. E, H) or 1000 (char. K, M)	E, H, K, M	B, C, W	D	S, T	P, R	DAL,MSI,SOA
	Resistance	Power	Char.	Term.	Res. Tol./	Level 1	Level 2	
Part Number	Value (Ohms)	Rating (mW)	(^)	Type (@)	Multiplier (#)	FRL (&)	FRL (&)	Manufacturer

	Resistance	Power	Char.	Term.	Res. Tol./	Level 1	Level 2	
Part Number	Value (Ohms)	Rating (mW)	(^)	Type (@)	Multiplier (#)	FRL (&)	FRL (&)	Manufacturer
M55342^09@10#0&	10.0	500 (char. E, H) or 1000 (char. K, M)	E, H, K, M	B, C, W	D, G, J, M	S, T	P, R	DAL,MSI,SOA
M55342^09@10#2&	10.2	500 (char. E, H) or 1000 (char. K, M)	E, H, K, M	B, C, W	D	S, T	P, R	DAL,MSI,SOA
M55342^09@10#5&	10.5	500 (char. E, H) or 1000 (char. K, M)	E, H, K, M	B, C, W	D	S, T	P, R	DAL,MSI,SOA
M55342^09@10#7&	10.7	500 (char. E, H) or 1000 (char. K, M)	E, H, K, M	B, C, W	D	S, T	P, R	DAL,MSI,SOA
M55342^09@11#0&	11.0	500 (char. E, H) or 1000 (char. K, M)	E, H, K, M	B, C, W	D, G, J	S, T	P, R	DAL,MSI,SOA
M55342^09@11#3&	11.3	500 (char. E, H) or 1000 (char. K, M)	E, H, K, M	B, C, W	D	S, T	P, R	DAL,MSI,SOA
M55342^09@11#5&	11.5	500 (char. E, H) or 1000 (char. K, M)	E, H, K, M	B, C, W	D	S, T	P, R	DAL,MSI,SOA
M55342^09@11#8&	11.8	500 (char. E, H) or 1000 (char. K, M)	E, H, K, M	B, C, W	D	S, T	P, R	DAL,MSI,SOA
M55342^09@12#0&	12.0	500 (char. E, H) or 1000 (char. K, M)	E, H, K, M	B, C, W	G, J, M	S, T	P, R	DAL,MSI,SOA
	Resistance	Power	Char.	Term.	Res. Tol./	Level 1	Level 2	
Part Number	Value (Ohms)	Rating (mW)	(^)	Type (@)	Multiplier (#)	FRL (&)	FRL (&)	Manufacturer
M55342^09@12#1&	12.1	500 (char. E, H) or 1000 (char. K, M)	E, H, K, M	B, C, W	D	S, T	P, R	DAL,MSI,SOA
M55342^09@12#4&	12.4	500 (char. E, H) or 1000 (char. K, M)	E, H, K, M	B, C, W	D	S, T	P, R	DAL,MSI,SOA
M55342^09@12#7&	12.7	500 (char. E, H) or 1000 (char. K, M)	E, H, K, M	B, C, W	D	S, T	P, R	DAL,MSI,SOA
M55342^09@13#0&	13.0	500 (char. E, H) or 1000 (char. K, M)	E, H, K, M	B, C, W	D, G, J	S, T	P, R	DAL,MSI,SOA
M55342^09@13#3&	13.3	500 (char. E, H) or 1000 (char. K, M)	E, H, K, M	B, C, W	D	S, T	P, R	DAL,MSI,SOA
M55342^09@13#7&	13.7	500 (char. E, H) or 1000 (char. K, M)	E, H, K, M	B, C, W	D	S, T	P, R	DAL,MSI,SOA
M55342^09@14#0&	14.0	500 (char. E, H) or 1000 (char. K, M)	E, H, K, M	B, C, W	D	S, T	P, R	DAL,MSI,SOA
M55342^09@14#3&	14.3	500 (char. E, H) or 1000 (char. K, M)	E, H, K, M	B, C, W	D	S, T	P, R	DAL,MSI,SOA
M55342^09@14#7&	14.7	500 (char. E, H) or 1000 (char. K, M)	E, H, K, M	B, C, W	D	S, T	P, R	DAL,MSI,SOA
	Resistance	Power	Char.	Term.	Res. Tol./	Level 1	Level 2	
Part Number	Value (Ohms)	Rating (mW)	(^)	Type (@)	Multiplier (#)	FRL (&)	FRL (&)	Manufacturer
M55342^09@15#0&	15.0	500 (char. E, H) or 1000 (char. K, M)	E, H, K, M	B, C, W	D, G, J, M	S, T	P, R	DAL,MSI,SOA
M55342^09@15#4&	15.4	500 (char. E, H) or 1000 (char. K, M)	E, H, K, M	B, C, W	D	S, T	P, R	DAL,MSI,SOA
M55342^09@15#8&	15.8	500 (char. E, H) or 1000 (char. K, M)	E, H, K, M	B, C, W	D	S, T	P, R	DAL,MSI,SOA
M55342^09@16#0&	16.0	500 (char. E, H) or 1000 (char. K, M)	E, H, K, M	B, C, W	G, J	S, T	P, R	DAL,MSI,SOA
M55342^09@16#2&	16.2	500 (char. E, H) or 1000 (char. K, M)	E, H, K, M	B, C, W	D	S, T	P, R	DAL,MSI,SOA
M55342^09@16#5&	16.5	500 (char. E, H) or 1000 (char. K, M)	E, H, K, M	B, C, W	D	S, T	P, R	DAL,MSI,SOA
M55342^09@16#9&	16.9	500 (char. E, H) or 1000 (char. K, M)	E, H, K, M	B, C, W	D	S, T	P, R	DAL,MSI,SOA
M55342^09@17#4&	17.4	500 (char. E, H) or 1000 (char. K, M)	E, H, K, M	B, C, W	D	S, T	P, R	DAL,MSI,SOA
M55342^09@17#8&	17.8	500 (char. E, H) or 1000 (char. K, M)	E, H, K, M	B, C, W	D	S, T	P, R	DAL,MSI,SOA
	Resistance	Power	Char.	Term.	Res. Tol./	Level 1	Level 2	
Part Number	Value (Ohms)	Rating (mW)	(^)	Type (@)	Multiplier (#)	FRL (&)	FRL (&)	Manufacturer
M55342^09@18#0&	18.0	500 (char. E, H) or 1000 (char. K, M)	E, H, K, M	B, C, W	G, J, M	S, T	P, R	DAL,MSI,SOA
M55342^09@18#2&	18.2	500 (char. E, H) or 1000 (char. K, M)	E, H, K, M	B, C, W	D	S, T	P, R	DAL,MSI,SOA
M55342^09@18#7&	18.7	500 (char. E, H) or 1000 (char. K, M)	E, H, K, M	B, C, W	D	S, T	P, R	DAL,MSI,SOA
M55342^09@19#1&	19.1	500 (char. E, H) or 1000 (char. K, M)	E, H, K, M	B, C, W	D	S, T	P, R	DAL,MSI,SOA
M55342^09@19#6&	19.6	500 (char. E, H) or 1000 (char. K, M)	E, H, K, M	B, C, W	D	S, T	P, R	DAL,MSI,SOA
M55342^09@20#0&	20.0	500 (char. E, H) or 1000 (char. K, M)	E, H, K, M	B, C, W	D, G, J, M	S, T	P, R	DAL,MSI,SOA
M55342^09@20#5&	20.5	500 (char. E, H) or 1000 (char. K, M)	E, H, K, M	B, C, W	D	S, T	P, R	DAL,MSI,SOA
M55342^09@21#0&	21.0	500 (char. E, H) or 1000 (char. K, M)	E, H, K, M	B, C, W	D	S, T	P, R	DAL,MSI,SOA

M55342^09@21#5&	21.5	500 (char. E, H) or 1000 (char. K, M)	E, H, K, M	B, C, W	D	S, T	P, R	DAL,MSI,SOA
	Resistance	Power	Char.	Term.	Res. Tol./	Level 1	Level 2	
Part Number	Value (Ohms)	Rating (mW)	(^)	Type (@)	Multiplier (#)	FRL (&)	FRL (&)	Manufacturer
M55342^09@22#0&	22.0	500 (char. E, H) or 1000 (char. K, M)	E, H, K, M	B, C, W	G, J, M	S, T	P, R	DAL,MSI,SOA
M55342^09@22#1&	22.1	500 (char. E, H) or 1000 (char. K, M)	E, H, K, M	B, C, W	D	S, T	P, R	DAL,MSI,SOA
M55342^09@22#6&	22.6	500 (char. E, H) or 1000 (char. K, M)	E, H, K, M	B, C, W	D	S, T	P, R	DAL,MSI,SOA
M55342^09@23#2&	23.2	500 (char. E, H) or 1000 (char. K, M)	E, H, K, M	B, C, W	D	S, T	P, R	DAL,MSI,SOA
M55342^09@23#7&	23.7	500 (char. E, H) or 1000 (char. K, M)	E, H, K, M	B, C, W	D	S, T	P, R	DAL,MSI,SOA
M55342^09@24#0&	24.0	500 (char. E, H) or 1000 (char. K, M)	E, H, K, M	B, C, W	G, J	S, T	P, R	DAL,MSI,SOA
M55342^09@24#3&	24.3	500 (char. E, H) or 1000 (char. K, M)	E, H, K, M	B, C, W	D	S, T	P, R	DAL,MSI,SOA
M55342^09@24#9&	24.9	500 (char. E, H) or 1000 (char. K, M)	E, H, K, M	B, C, W	D	S, T	P, R	DAL,MSI,SOA
M55342^09@25#5&	25.5	500 (char. E, H) or 1000 (char. K, M)	E, H, K, M	B, C, W	D	S, T	P, R	DAL,MSI,SOA
	Resistance	Power	Char.	Term.	Res. Tol./	Level 1	Level 2	
Part Number	Value (Ohms)	Rating (mW)	(^)	Type (@)	Multiplier (#)	FRL (&)	FRL (&)	Manufacturer
M55342^09@26#1&	26.1	500 (char. E, H) or 1000 (char. K, M)	E, H, K, M	B, C, W	D	S, T	P, R	DAL,MSI,SOA
M55342^09@26#7&	26.7	500 (char. E, H) or 1000 (char. K, M)	E, H, K, M	B, C, W	D	S, T	P, R	DAL,MSI,SOA
M55342^09@27#0&	27.0	500 (char. E, H) or 1000 (char. K, M)	E, H, K, M	B, C, W	G, J, M	S, T	P, R	DAL,MSI,SOA
M55342^09@27#4&	27.4	500 (char. E, H) or 1000 (char. K, M)	E, H, K, M	B, C, W	D	S, T	P, R	DAL,MSI,SOA
M55342^09@28#0&	28.0	500 (char. E, H) or 1000 (char. K, M)	E, H, K, M	B, C, W	D	S, T	P, R	DAL,MSI,SOA
M55342^09@28#7&	28.7	500 (char. E, H) or 1000 (char. K, M)	E, H, K, M	B, C, W	D	S, T	P, R	DAL,MSI,SOA
M55342^09@29#4&	29.4	500 (char. E, H) or 1000 (char. K, M)	E, H, K, M	B, C, W	D	S, T	P, R	DAL,MSI,SOA
M55342^09@30#0&	30.0	500 (char. E, H) or 1000 (char. K, M)	E, H, K, M	B, C, W	G, J	S, T	P, R	DAL,MSI,SOA
M55342^09@30#1&	30.1	500 (char. E, H) or 1000 (char. K, M)	E, H, K, M	B, C, W	D	S, T	P, R	DAL,MSI,SOA
	Resistance	Power	Char.	Term.	Res. Tol./	Level 1	Level 2	
Part Number	Value (Ohms)	Rating (mW)	(^)	Type (@)	Multiplier (#)	FRL (&)	FRL (&)	Manufacturer
M55342^09@30#9&	30.9	500 (char. E, H) or 1000 (char. K, M)	E, H, K, M	B, C, W	D	S, T	P, R	DAL,MSI,SOA
M55342^09@31#6&	31.6	500 (char. E, H) or 1000 (char. K, M)	E, H, K, M	B, C, W	D	S, T	P, R	DAL,MSI,SOA
M55342^09@32#4&	32.4	500 (char. E, H) or 1000 (char. K, M)	E, H, K, M	B, C, W	D	S, T	P, R	DAL,MSI,SOA
M55342^09@33#0&	33.0	500 (char. E, H) or 1000 (char. K, M)	E, H, K, M	B, C, W	G, J, M	S, T	P, R	DAL,MSI,SOA
M55342^09@33#2&	33.2	500 (char. E, H) or 1000 (char. K, M)	E, H, K, M	B, C, W	D	S, T	P, R	DAL,MSI,SOA
M55342^09@34#0&	34.0	500 (char. E, H) or 1000 (char. K, M)	E, H, K, M	B, C, W	D	S, T	P, R	DAL,MSI,SOA
M55342^09@34#8&	34.8	500 (char. E, H) or 1000 (char. K, M)	E, H, K, M	B, C, W	D	S, T	P, R	DAL,MSI,SOA
M55342^09@35#7&	35.7	500 (char. E, H) or 1000 (char. K, M)	E, H, K, M	B, C, W	D	S, T	P, R	DAL,MSI,SOA
M55342^09@36#0&	36.0	500 (char. E, H) or 1000 (char. K, M)	E, H, K, M	B, C, W	G, J	S, T	P, R	DAL,MSI,SOA
	Resistance	Power	Char.	Term.	Res. Tol./	Level 1	Level 2	
Part Number	Value (Ohms)	Rating (mW)	(^)	Type (@)	Multiplier (#)	FRL (&)	FRL (&)	Manufacturer
M55342^09@36#5&	36.5	500 (char. E, H) or 1000 (char. K, M)	E, H, K, M	B, C, W	D	S, T	P, R	DAL,MSI,SOA
M55342^09@37#4&	37.4	500 (char. E, H) or 1000 (char. K, M)	E, H, K, M	B, C, W	D	S, T	P, R	DAL,MSI,SOA
M55342^09@38#3&	38.3	500 (char. E, H) or 1000 (char. K, M)	E, H, K, M	B, C, W	D	S, T	P, R	DAL,MSI,SOA
M55342^09@39#0&	39.0	500 (char. E, H) or 1000 (char. K, M)	E, H, K, M	B, C, W	G, J, M	S, T	P, R	DAL,MSI,SOA
M55342^09@39#2&	39.2	500 (char. E, H) or 1000 (char. K, M)	E, H, K, M	B, C, W	D	S, T	P, R	DAL,MSI,SOA
M55342^09@40#2&	40.2	500 (char. E, H) or 1000 (char. K, M)	E, H, K, M	B, C, W	D	S, T	P, R	DAL,MSI,SOA
M55342^09@41#2&	41.2	500 (char. E, H) or 1000 (char. K, M)	E, H, K, M	B, C, W	D	S, T	P, R	DAL,MSI,SOA
M55342^09@42#2&	42.2	500 (char. E, H) or 1000 (char. K, M)	E, H, K, M	B, C, W	D	S, T	P, R	DAL,MSI,SOA
M55342^09@43#0&	43.0	500 (char. E, H) or 1000 (char. K, M)	E, H, K, M	B, C, W	G, J	S, T	P, R	DAL,MSI,SOA
	Resistance	Power	Char.	Term.	Res. Tol./	Level 1	Level 2	
Part Number	Value (Ohms)	Rating (mW)	(^)	Type (@)	Multiplier (#)	FRL (&)	FRL (&)	Manufacturer

M55342^09@43#2&	43.2	500 (char. E, H) or 1000 (char. K, M)	E, H, K, M	B, C, W	D	S, T	P, R	DAL,MSI,SOA
M55342^09@44#2&	44.2	500 (char. E, H) or 1000 (char. K, M)	E, H, K, M	B, C, W	D	S, T	P, R	DAL,MSI,SOA
M55342^09@45#3&	45.3	500 (char. E, H) or 1000 (char. K, M)	E, H, K, M	B, C, W	D	S, T	P, R	DAL,MSI,SOA
M55342^09@46#4&	46.4	500 (char. E, H) or 1000 (char. K, M)	E, H, K, M	B, C, W	D	S, T	P, R	DAL,MSI,SOA
M55342^09@47#0&	47.0	500 (char. E, H) or 1000 (char. K, M)	E, H, K, M	B, C, W	G, J, M	S, T	P, R	DAL,MSI,SOA
M55342^09@47#5&	47.5	500 (char. E, H) or 1000 (char. K, M)	E, H, K, M	B, C, W	D	S, T	P, R	DAL,MSI,SOA
M55342^09@48#7&	48.7	500 (char. E, H) or 1000 (char. K, M)	E, H, K, M	B, C, W	D	S, T	P, R	DAL,MSI,SOA
M55342^09@49#9&	49.9	500 (char. E, H) or 1000 (char. K, M)	E, H, K, M	B, C, W	D	S, T	P, R	DAL,MSI,SOA
M55342^09@51#0&	51.0	500 (char. E, H) or 1000 (char. K, M)	E, H, K, M	B, C, W	G, J	S, T	P, R	DAL,MSI,SOA
	Resistance	Power	Char.	Term.	Res. Tol./	Level 1	Level 2	
Part Number	Value (Ohms)	Rating (mW)	(^)	Type (@)	Multiplier (#)	FRL (&)	FRL (&)	Manufacturer
M55342^09@51#1&	51.1	500 (char. E, H) or 1000 (char. K, M)	E, H, K, M	B, C, W	D	S, T	P, R	DAL,MSI,SOA
M55342^09@52#3&	52.3	500 (char. E, H) or 1000 (char. K, M)	E, H, K, M	B, C, W	D	S, T	P, R	DAL,MSI,SOA
M55342^09@53#6&	53.6	500 (char. E, H) or 1000 (char. K, M)	E, H, K, M	B, C, W	D	S, T	P, R	DAL,MSI,SOA
M55342^09@54#9&	54.9	500 (char. E, H) or 1000 (char. K, M)	E, H, K, M	B, C, W	D	S, T	P, R	DAL,MSI,SOA
M55342^09@56#0&	56.0	500 (char. E, H) or 1000 (char. K, M)	E, H, K, M	B, C, W	G, J, M	S, T	P, R	DAL,MSI,SOA
M55342^09@56#2&	56.2	500 (char. E, H) or 1000 (char. K, M)	E, H, K, M	B, C, W	D	S, T	P, R	DAL,MSI,SOA
M55342^09@57#6&	57.6	500 (char. E, H) or 1000 (char. K, M)	E, H, K, M	B, C, W	D	S, T	P, R	DAL,MSI,SOA
M55342^09@59#0&	59.0	500 (char. E, H) or 1000 (char. K, M)	E, H, K, M	B, C, W	D	S, T	P, R	DAL,MSI,SOA
M55342^09@60#4&	60.4	500 (char. E, H) or 1000 (char. K, M)	E, H, K, M	B, C, W	D	S, T	P, R	DAL,MSI,SOA
	Resistance	Power	Char.	Term.	Res. Tol./	Level 1	Level 2	
Part Number	Value (Ohms)	Rating (mW)	(^)	Type (@)	Multiplier (#)	FRL (&)	FRL (&)	Manufacturer
M55342^09@61#9&	61.9	500 (char. E, H) or 1000 (char. K, M)	E, H, K, M	B, C, W	D	S, T	P, R	DAL,MSI,SOA
M55342^09@62#0&	62.0	500 (char. E, H) or 1000 (char. K, M)	E, H, K, M	B, C, W	G, J	S, T	P, R	DAL,MSI,SOA
M55342^09@63#4&	63.4	500 (char. E, H) or 1000 (char. K, M)	E, H, K, M	B, C, W	D	S, T	P, R	DAL,MSI,SOA
M55342^09@64#9&	64.9	500 (char. E, H) or 1000 (char. K, M)	E, H, K, M	B, C, W	D	S, T	P, R	DAL,MSI,SOA
M55342^09@66#5&	66.5	500 (char. E, H) or 1000 (char. K, M)	E, H, K, M	B, C, W	D	S, T	P, R	DAL,MSI,SOA
M55342^09@68#0&	68.0	500 (char. E, H) or 1000 (char. K, M)	E, H, K, M	B, C, W	G, J, M	S, T	P, R	DAL,MSI,SOA
M55342^09@68#1&	68.1	500 (char. E, H) or 1000 (char. K, M)	E, H, K, M	B, C, W	D	S, T	P, R	DAL,MSI,SOA
M55342^09@69#8&	69.8	500 (char. E, H) or 1000 (char. K, M)	E, H, K, M	B, C, W	D	S, T	P, R	DAL,MSI,SOA
M55342^09@71#5&	71.5	500 (char. E, H) or 1000 (char. K, M)	E, H, K, M	B, C, W	D	S, T	P, R	DAL,MSI,SOA
	Resistance	Power	Char.	Term.	Res. Tol./	Level 1	Level 2	
Part Number	Value (Ohms)	Rating (mW)	(^)	Type (@)	Multiplier (#)	FRL (&)	FRL (&)	Manufacturer
M55342^09@73#2&	73.2	500 (char. E, H) or 1000 (char. K, M)	E, H, K, M	B, C, W	D	S, T	P, R	DAL,MSI,SOA
M55342^09@75#0&	75.0	500 (char. E, H) or 1000 (char. K, M)	E, H, K, M	B, C, W	D, G, J	S, T	P, R	DAL,MSI,SOA
M55342^09@76#8&	76.8	500 (char. E, H) or 1000 (char. K, M)	E, H, K, M	B, C, W	D	S, T	P, R	DAL,MSI,SOA
M55342^09@78#7&	78.7	500 (char. E, H) or 1000 (char. K, M)	E, H, K, M	B, C, W	D	S, T	P, R	DAL,MSI,SOA
M55342^09@80#6&	80.6	500 (char. E, H) or 1000 (char. K, M)	E, H, K, M	B, C, W	D	S, T	P, R	DAL,MSI,SOA
M55342^09@82#0&	82.0	500 (char. E, H) or 1000 (char. K, M)	E, H, K, M	B, C, W	G, J, M	S, T	P, R	DAL,MSI,SOA
M55342^09@82#5&	82.5	500 (char. E, H) or 1000 (char. K, M)	E, H, K, M	B, C, W	D	S, T	P, R	DAL,MSI,SOA
M55342^09@84#5&	84.5	500 (char. E, H) or 1000 (char. K, M)	E, H, K, M	B, C, W	D	S, T	P, R	DAL,MSI,SOA
M55342^09@86#6&	86.6	500 (char. E, H) or 1000 (char. K, M)	E, H, K, M	B, C, W	D	S, T	P, R	DAL,MSI,SOA
	Resistance	Power	Char.	Term.	Res. Tol./	Level 1	Level 2	
Part Number	Value (Ohms)	Rating (mW)	(^)	Type (@)	Multiplier (#)	FRL (&)	FRL (&)	Manufacturer
M55342^09@88#7&	88.7	500 (char. E, H) or 1000 (char. K, M)	E, H, K, M	B, C, W	D	S, T	P, R	DAL,MSI,SOA
M55342^09@90#9&	90.9	500 (char. E, H) or 1000 (char. K, M)	E, H, K, M	B, C, W	D	S, T	P, R	DAL,MSI,SOA
M55342^09@91#0&	91.0	500 (char. E, H) or 1000 (char. K, M)	E, H, K, M	B, C, W	G, J	S, T	P, R	DAL,MSI,SOA

M55342^09@93#1&	93.1	500 (char. E, H) or 1000 (char. K, M)	E, H, K, M	B, C, W	D	S, T	P, R	DAL,MSI,SOA
M55342^09@95#3&	95.3	500 (char. E, H) or 1000 (char. K, M)	E, H, K, M	B, C, W	D	S, T	P, R	DAL,MSI,SOA
M55342^09@97#6&	97.6	500 (char. E, H) or 1000 (char. K, M)	E, H, K, M	B, C, W	D	S, T	P, R	DAL,MSI,SOA
	Resistance	Power	Char.	Term.	Res. Tol./	Level 1	Level 2	
Part Number	Value (Ohms)	Rating (mW)	(^)	Type (@)	Multiplier (#)	FRL (&)	FRL (&)	Manufacturer

MIL-PRF-55342/9 (RM2512) Film Chip Resistors: 100 Ohms Through 976 Ohms

	Resistance	Power	Char.	Term.	Res. Tol./	Level 1	Level 2	
Part Number	Value (Ohms)	Rating (mW)	(^)	Type (@)	Multiplier (#)	FRL (&)	FRL (&)	Manufacturer
M55342^09@100#&	100	500 (char. E, H) or 1000 (char. K, M)	E, H, K, M	B, C, W	D, G, J, M	S, T	P, R	DAL,MSI,SOA
M55342^09@102#&	102	500 (char. E, H) or 1000 (char. K, M)	E, H, K, M	B, C, W	D	S, T	P, R	DAL,MSI,SOA
M55342^09@105#&	105	500 (char. E, H) or 1000 (char. K, M)	E, H, K, M	B, C, W	D	S, T	P, R	DAL,MSI,SOA
M55342^09@107#&	107	500 (char. E, H) or 1000 (char. K, M)	E, H, K, M	B, C, W	D	S, T	P, R	DAL,MSI,SOA
M55342^09@110#&	110	500 (char. E, H) or 1000 (char. K, M)	E, H, K, M	B, C, W	D, G, J	S, T	P, R	DAL,MSI,SOA
M55342^09@113#&	113	500 (char. E, H) or 1000 (char. K, M)	E, H, K, M	B, C, W	D	S, T	P, R	DAL,MSI,SOA
M55342^09@115#&	115	500 (char. E, H) or 1000 (char. K, M)	E, H, K, M	B, C, W	D	S, T	P, R	DAL,MSI,SOA
M55342^09@118#&	118	500 (char. E, H) or 1000 (char. K, M)	E, H, K, M	B, C, W	D	S, T	P, R	DAL,MSI,SOA
M55342^09@120#&	120	500 (char. E, H) or 1000 (char. K, M)	E, H, K, M	B, C, W	G, J, M	S, T	P, R	DAL,MSI,SOA
	Resistance	Power	Char.	Term.	Res. Tol./	Level 1	Level 2	
Part Number	Value (Ohms)	Rating (mW)	(^)	Type (@)	Multiplier (#)	FRL (&)	FRL (&)	Manufacturer
M55342^09@121#&	121	500 (char. E, H) or 1000 (char. K, M)	E, H, K, M	B, C, W	D	S, T	P, R	DAL,MSI,SOA
M55342^09@124#&	124	500 (char. E, H) or 1000 (char. K, M)	E, H, K, M	B, C, W	D	S, T	P, R	DAL,MSI,SOA
M55342^09@127#&	127	500 (char. E, H) or 1000 (char. K, M)	E, H, K, M	B, C, W	D	S, T	P, R	DAL,MSI,SOA
M55342^09@130#&	130	500 (char. E, H) or 1000 (char. K, M)	E, H, K, M	B, C, W	D, G, J	S, T	P, R	DAL,MSI,SOA
M55342^09@133#&	133	500 (char. E, H) or 1000 (char. K, M)	E, H, K, M	B, C, W	D	S, T	P, R	DAL,MSI,SOA
M55342^09@137#&	137	500 (char. E, H) or 1000 (char. K, M)	E, H, K, M	B, C, W	D	S, T	P, R	DAL,MSI,SOA
M55342^09@140#&	140	500 (char. E, H) or 1000 (char. K, M)	E, H, K, M	B, C, W	D	S, T	P, R	DAL,MSI,SOA
M55342^09@143#&	143	500 (char. E, H) or 1000 (char. K, M)	E, H, K, M	B, C, W	D	S, T	P, R	DAL,MSI,SOA
M55342^09@147#&	147	500 (char. E, H) or 1000 (char. K, M)	E, H, K, M	B, C, W	D	S, T	P, R	DAL,MSI,SOA
	Resistance	Power	Char.	Term.	Res. Tol./	Level 1	Level 2	
Part Number	Value (Ohms)	Rating (mW)	(^)	Type (@)	Multiplier (#)	FRL (&)	FRL (&)	Manufacturer
M55342^09@150#&	150	500 (char. E, H) or 1000 (char. K, M)	E, H, K, M	B, C, W	D, G, J, M	S, T	P, R	DAL,MSI,SOA
M55342^09@154#&	154	500 (char. E, H) or 1000 (char. K, M)	E, H, K, M	B, C, W	D	S, T	P, R	DAL,MSI,SOA
M55342^09@158#&	158	500 (char. E, H) or 1000 (char. K, M)	E, H, K, M	B, C, W	D	S, T	P, R	DAL,MSI,SOA
M55342^09@160#&	160	500 (char. E, H) or 1000 (char. K, M)	E, H, K, M	B, C, W	G, J	S, T	P, R	DAL,MSI,SOA
M55342^09@162#&	162	500 (char. E, H) or 1000 (char. K, M)	E, H, K, M	B, C, W	D	S, T	P, R	DAL,MSI,SOA
M55342^09@165#&	165	500 (char. E, H) or 1000 (char. K, M)	E, H, K, M	B, C, W	D	S, T	P, R	DAL,MSI,SOA
M55342^09@169#&	169	500 (char. E, H) or 1000 (char. K, M)	E, H, K, M	B, C, W	D	S, T	P, R	DAL,MSI,SOA
M55342^09@174#&	174	500 (char. E, H) or 1000 (char. K, M)	E, H, K, M	B, C, W	D	S, T	P, R	DAL,MSI,SOA
M55342^09@178#&	178	500 (char. E, H) or 1000 (char. K, M)	E, H, K, M	B, C, W	D	S, T	P, R	DAL,MSI,SOA
	Resistance	Power	Char.	Term.	Res. Tol./	Level 1	Level 2	
Part Number	Value (Ohms)	Rating (mW)	(^)	Type (@)	Multiplier (#)	FRL (&)	FRL (&)	Manufacturer
M55342^09@180#&	180	500 (char. E, H) or 1000 (char. K, M)	E, H, K, M	B, C, W	G, J, M	S, T	P, R	DAL,MSI,SOA
M55342^09@182#&	182	500 (char. E, H) or 1000 (char. K, M)	E, H, K, M	B, C, W	D	S, T	P, R	DAL,MSI,SOA

M55342^09@187#&	187	500 (char. E, H) or 1000 (char. K, M)	E, H, K, M	B, C, W	D	S, T	P, R	DAL,MSI,SOA
M55342^09@191#&	191	500 (char. E, H) or 1000 (char. K, M)	E, H, K, M	B, C, W	D	S, T	P, R	DAL,MSI,SOA
M55342^09@196#&	196	500 (char. E, H) or 1000 (char. K, M)	E, H, K, M	B, C, W	D	S, T	P, R	DAL,MSI,SOA
M55342^09@200#&	200	500 (char. E, H) or 1000 (char. K, M)	E, H, K, M	B, C, W	D, G, J, M	S, T	P, R	DAL,MSI,SOA
M55342^09@205#&	205	500 (char. E, H) or 1000 (char. K, M)	E, H, K, M	B, C, W	D	S, T	P, R	DAL,MSI,SOA
M55342^09@210#&	210	500 (char. E, H) or 1000 (char. K, M)	E, H, K, M	B, C, W	D	S, T	P, R	DAL,MSI,SOA
M55342^09@215#&	215	500 (char. E, H) or 1000 (char. K, M)	E, H, K, M	B, C, W	D	S, T	P, R	DAL,MSI,SOA
	Resistance	Power	Char.	Term.	Res. Tol./	Level 1	Level 2	
Part Number	Value (Ohms)	Rating (mW)	(^)	Type (@)	Multiplier (#)	FRL (&)	FRL (&)	Manufacturer
M55342^09@220#&	220	500 (char. E, H) or 1000 (char. K, M)	E, H, K, M	B, C, W	G, J, M	S, T	P, R	DAL,MSI,SOA
M55342^09@221#&	221	500 (char. E, H) or 1000 (char. K, M)	E, H, K, M	B, C, W	D	S, T	P, R	DAL,MSI,SOA
M55342^09@226#&	226	500 (char. E, H) or 1000 (char. K, M)	E, H, K, M	B, C, W	D	S, T	P, R	DAL,MSI,SOA
M55342^09@232#&	232	500 (char. E, H) or 1000 (char. K, M)	E, H, K, M	B, C, W	D	S, T	P, R	DAL,MSI,SOA
M55342^09@237#&	237	500 (char. E, H) or 1000 (char. K, M)	E, H, K, M	B, C, W	D	S, T	P, R	DAL,MSI,SOA
M55342^09@240#&	240	500 (char. E, H) or 1000 (char. K, M)	E, H, K, M	B, C, W	G, J	S, T	P, R	DAL,MSI,SOA
M55342^09@243#&	243	500 (char. E, H) or 1000 (char. K, M)	E, H, K, M	B, C, W	D	S, T	P, R	DAL,MSI,SOA
M55342^09@249#&	249	500 (char. E, H) or 1000 (char. K, M)	E, H, K, M	B, C, W	D	S, T	P, R	DAL,MSI,SOA
M55342^09@255#&	255	500 (char. E, H) or 1000 (char. K, M)	E, H, K, M	B, C, W	D	S, T	P, R	DAL,MSI,SOA
	Resistance	Power	Char.	Term.	Res. Tol./	Level 1	Level 2	
Part Number	Value (Ohms)	Rating (mW)	(^)	Type (@)	Multiplier (#)	FRL (&)	FRL (&)	Manufacturer
M55342^09@261#&	261	500 (char. E, H) or 1000 (char. K, M)	E, H, K, M	B, C, W	D	S, T	P, R	DAL,MSI,SOA
M55342^09@267#&	267	500 (char. E, H) or 1000 (char. K, M)	E, H, K, M	B, C, W	D	S, T	P, R	DAL,MSI,SOA
M55342^09@270#&	270	500 (char. E, H) or 1000 (char. K, M)	E, H, K, M	B, C, W	G, J, M	S, T	P, R	DAL,MSI,SOA
M55342^09@274#&	274	500 (char. E, H) or 1000 (char. K, M)	E, H, K, M	B, C, W	D	S, T	P, R	DAL,MSI,SOA
M55342^09@280#&	280	500 (char. E, H) or 1000 (char. K, M)	E, H, K, M	B, C, W	D	S, T	P, R	DAL,MSI,SOA
M55342^09@287#&	287	500 (char. E, H) or 1000 (char. K, M)	E, H, K, M	B, C, W	D	S, T	P, R	DAL,MSI,SOA
M55342^09@294#&	294	500 (char. E, H) or 1000 (char. K, M)	E, H, K, M	B, C, W	D	S, T	P, R	DAL,MSI,SOA
M55342^09@300#&	300	500 (char. E, H) or 1000 (char. K, M)	E, H, K, M	B, C, W	G, J	S, T	P, R	DAL,MSI,SOA
M55342^09@301#&	301	500 (char. E, H) or 1000 (char. K, M)	E, H, K, M	B, C, W	D	S, T	P, R	DAL,MSI,SOA
	Resistance	Power	Char.	Term.	Res. Tol./	Level 1	Level 2	
Part Number	Value (Ohms)	Rating (mW)	(^)	Type (@)	Multiplier (#)	FRL (&)	FRL (&)	Manufacturer
M55342^09@309#&	309	500 (char. E, H) or 1000 (char. K, M)	E, H, K, M	B, C, W	D	S, T	P, R	DAL,MSI,SOA
M55342^09@316#&	316	500 (char. E, H) or 1000 (char. K, M)	E, H, K, M	B, C, W	D	S, T	P, R	DAL,MSI,SOA
M55342^09@324#&	324	500 (char. E, H) or 1000 (char. K, M)	E, H, K, M	B, C, W	D	S, T	P, R	DAL,MSI,SOA
M55342^09@330#&	330	500 (char. E, H) or 1000 (char. K, M)	E, H, K, M	B, C, W	G, J, M	S, T	P, R	DAL,MSI,SOA
M55342^09@332#&	332	500 (char. E, H) or 1000 (char. K, M)	E, H, K, M	B, C, W	D	S, T	P, R	DAL,MSI,SOA
M55342^09@340#&	340	500 (char. E, H) or 1000 (char. K, M)	E, H, K, M	B, C, W	D	S, T	P, R	DAL,MSI,SOA
M55342^09@348#&	348	500 (char. E, H) or 1000 (char. K, M)	E, H, K, M	B, C, W	D	S, T	P, R	DAL,MSI,SOA
M55342^09@357#&	357	500 (char. E, H) or 1000 (char. K, M)	E, H, K, M	B, C, W	D	S, T	P, R	DAL,MSI,SOA
M55342^09@360#&	360	500 (char. E, H) or 1000 (char. K, M)	E, H, K, M	B, C, W	G, J	S, T	P, R	DAL,MSI,SOA
	Resistance	Power	Char.	Term.	Res. Tol./	Level 1	Level 2	
Part Number	Value (Ohms)	Rating (mW)	(^)	Type (@)	Multiplier (#)	FRL (&)	FRL (&)	Manufacturer
M55342^09@365#&	365	500 (char. E, H) or 1000 (char. K, M)	E, H, K, M	B, C, W	D	S, T	P, R	DAL,MSI,SOA
M55342^09@374#&	374	500 (char. E, H) or 1000 (char. K, M)	E, H, K, M	B, C, W	D	S, T	P, R	DAL,MSI,SOA
M55342^09@383#&	383	500 (char. E, H) or 1000 (char. K, M)	E, H, K, M	B, C, W	D	S, T	P, R	DAL,MSI,SOA
M55342^09@390#&	390	500 (char. E, H) or 1000 (char. K, M)	E, H, K, M	B, C, W	G, J, M	S, T	P, R	DAL,MSI,SOA
M55342^09@392#&	392	500 (char. E, H) or 1000 (char. K, M)	E, H, K, M	B, C, W	D	S, T	P, R	DAL,MSI,SOA

M55342^09@402#&	402	500 (char. E, H) or 1000 (char. K, M)	E, H, K, M	B, C, W	D	S, T	P, R	DAL,MSI,SOA
M55342^09@412#&	412	500 (char. E, H) or 1000 (char. K, M)	E, H, K, M	B, C, W	D	S, T	P, R	DAL,MSI,SOA
M55342^09@422#&	422	500 (char. E, H) or 1000 (char. K, M)	E, H, K, M	B, C, W	D	S, T	P, R	DAL,MSI,SOA
M55342^09@430#&	430	500 (char. E, H) or 1000 (char. K, M)	E, H, K, M	B, C, W	G, J	S, T	P, R	DAL,MSI,SOA
	Resistance	Power	Char.	Term.	Res. Tol./	Level 1	Level 2	
Part Number	Value (Ohms)	Rating (mW)	(^)	Type (@)	Multiplier (#)	FRL (&)	FRL (&)	Manufacturer
M55342^09@432#&	432	500 (char. E, H) or 1000 (char. K, M)	E, H, K, M	B, C, W	D	S, T	P, R	DAL,MSI,SOA
M55342^09@442#&	442	500 (char. E, H) or 1000 (char. K, M)	E, H, K, M	B, C, W	D	S, T	P, R	DAL,MSI,SOA
M55342^09@453#&	453	500 (char. E, H) or 1000 (char. K, M)	E, H, K, M	B, C, W	D	S, T	P, R	DAL,MSI,SOA
M55342^09@464#&	464	500 (char. E, H) or 1000 (char. K, M)	E, H, K, M	B, C, W	D	S, T	P, R	DAL,MSI,SOA
M55342^09@470#&	470	500 (char. E, H) or 1000 (char. K, M)	E, H, K, M	B, C, W	G, J, M	S, T	P, R	DAL,MSI,SOA
M55342^09@475#&	475	500 (char. E, H) or 1000 (char. K, M)	E, H, K, M	B, C, W	D	S, T	P, R	DAL,MSI,SOA
M55342^09@487#&	487	500 (char. E, H) or 1000 (char. K, M)	E, H, K, M	B, C, W	D	S, T	P, R	DAL,MSI,SOA
M55342^09@499#&	499	500 (char. E, H) or 1000 (char. K, M)	E, H, K, M	B, C, W	D	S, T	P, R	DAL,MSI,SOA
M55342^09@510#&	510	500 (char. E, H) or 1000 (char. K, M)	E, H, K, M	B, C, W	G, J	S, T	P, R	DAL,MSI,SOA
	Resistance	Power	Char.	Term.	Res. Tol./	Level 1	Level 2	
Part Number	Value (Ohms)	Rating (mW)	(^)	Type (@)	Multiplier (#)	FRL (&)	FRL (&)	Manufacturer
M55342^09@511#&	511	500 (char. E, H) or 1000 (char. K, M)	E, H, K, M	B, C, W	D	S, T	P, R	DAL,MSI,SOA
M55342^09@523#&	523	500 (char. E, H) or 1000 (char. K, M)	E, H, K, M	B, C, W	D	S, T	P, R	DAL,MSI,SOA
M55342^09@536#&	536	500 (char. E, H) or 1000 (char. K, M)	E, H, K, M	B, C, W	D	S, T	P, R	DAL,MSI,SOA
M55342^09@549#&	549	500 (char. E, H) or 1000 (char. K, M)	E, H, K, M	B, C, W	D	S, T	P, R	DAL,MSI,SOA
M55342^09@560#&	560	500 (char. E, H) or 1000 (char. K, M)	E, H, K, M	B, C, W	G, J, M	S, T	P, R	DAL,MSI,SOA
M55342^09@562#&	562	500 (char. E, H) or 1000 (char. K, M)	E, H, K, M	B, C, W	D	S, T	P, R	DAL,MSI,SOA
M55342^09@576#&	576	500 (char. E, H) or 1000 (char. K, M)	E, H, K, M	B, C, W	D	S, T	P, R	DAL,MSI,SOA
M55342^09@590#&	590	500 (char. E, H) or 1000 (char. K, M)	E, H, K, M	B, C, W	D	S, T	P, R	DAL,MSI,SOA
M55342^09@604#&	604	500 (char. E, H) or 1000 (char. K, M)	E, H, K, M	B, C, W	D	S, T	P, R	DAL,MSI,SOA
	Resistance	Power	Char.	Term.	Res. Tol./	Level 1	Level 2	
Part Number	Value (Ohms)	Rating (mW)	(^)	Type (@)	Multiplier (#)	FRL (&)	FRL (&)	Manufacturer
M55342^09@619#&	619	500 (char. E, H) or 1000 (char. K, M)	E, H, K, M	B, C, W	D	S, T	P, R	DAL,MSI,SOA
M55342^09@620#&	620	500 (char. E, H) or 1000 (char. K, M)	E, H, K, M	B, C, W	G, J	S, T	P, R	DAL,MSI,SOA
M55342^09@634#&	634	500 (char. E, H) or 1000 (char. K, M)	E, H, K, M	B, C, W	D	S, T	P, R	DAL,MSI,SOA
M55342^09@649#&	649	500 (char. E, H) or 1000 (char. K, M)	E, H, K, M	B, C, W	D	S, T	P, R	DAL,MSI,SOA
M55342^09@665#&	665	500 (char. E, H) or 1000 (char. K, M)	E, H, K, M	B, C, W	D	S, T	P, R	DAL,MSI,SOA
M55342^09@680#&	680	500 (char. E, H) or 1000 (char. K, M)	E, H, K, M	B, C, W	G, J, M	S, T	P, R	DAL,MSI,SOA
M55342^09@681#&	681	500 (char. E, H) or 1000 (char. K, M)	E, H, K, M	B, C, W	D	S, T	P, R	DAL,MSI,SOA
M55342^09@698#&	698	500 (char. E, H) or 1000 (char. K, M)	E, H, K, M	B, C, W	D	S, T	P, R	DAL,MSI,SOA
M55342^09@715#&	715	500 (char. E, H) or 1000 (char. K, M)	E, H, K, M	B, C, W	D	S, T	P, R	DAL,MSI,SOA
	Resistance	Power	Char.	Term.	Res. Tol./	Level 1	Level 2	
Part Number	Value (Ohms)	Rating (mW)	(^)	Type (@)	Multiplier (#)	FRL (&)	FRL (&)	Manufacturer
M55342^09@732#&	732	500 (char. E, H) or 1000 (char. K, M)	E, H, K, M	B, C, W	D	S, T	P, R	DAL,MSI,SOA
M55342^09@750#&	750	500 (char. E, H) or 1000 (char. K, M)	E, H, K, M	B, C, W	D, G, J	S, T	P, R	DAL,MSI,SOA
M55342^09@768#&	768	500 (char. E, H) or 1000 (char. K, M)	E, H, K, M	B, C, W	D	S, T	P, R	DAL,MSI,SOA
M55342^09@787#&	787	500 (char. E, H) or 1000 (char. K, M)	E, H, K, M	B, C, W	D	S, T	P, R	DAL,MSI,SOA
M55342^09@806#&	806	500 (char. E, H) or 1000 (char. K, M)	E, H, K, M	B, C, W	D	S, T	P, R	DAL,MSI,SOA
M55342^09@820#&	820	500 (char. E, H) or 1000 (char. K, M)	E, H, K, M	B, C, W	G, J, M	S, T	P, R	DAL,MSI,SOA
M55342^09@825#&	825	500 (char. E, H) or 1000 (char. K, M)	E, H, K, M	B, C, W	D	S, T	P, R	DAL,MSI,SOA
M55342^09@845#&	845	500 (char. E, H) or 1000 (char. K, M)	E, H, K, M	B, C, W	D	S, T	P, R	DAL,MSI,SOA

M55342^09@866#&	866	500 (char. E, H) or 1000 (char. K, M)	E, H, K, M	B, C, W	D	S, T	P, R	DAL,MSI,SOA
	Resistance	Power	Char.	Term.	Res. Tol./	Level 1	Level 2	
Part Number	Value (Ohms)	Rating (mW)	(^)	Type (@)	Multiplier (#)	FRL (&)	FRL (&)	Manufacturer
M55342^09@887#&	887	500 (char. E, H) or 1000 (char. K, M)	E, H, K, M	B, C, W	D	S, T	P, R	DAL,MSI,SOA
M55342^09@909#&	909	500 (char. E, H) or 1000 (char. K, M)	E, H, K, M	B, C, W	D	S, T	P, R	DAL,MSI,SOA
M55342^09@910#&	910	500 (char. E, H) or 1000 (char. K, M)	E, H, K, M	B, C, W	G, J	S, T	P, R	DAL,MSI,SOA
M55342^09@931#&	931	500 (char. E, H) or 1000 (char. K, M)	E, H, K, M	B, C, W	D	S, T	P, R	DAL,MSI,SOA
M55342^09@953#&	953	500 (char. E, H) or 1000 (char. K, M)	E, H, K, M	B, C, W	D	S, T	P, R	DAL,MSI,SOA
M55342^09@976#&	976	500 (char. E, H) or 1000 (char. K, M)	E, H, K, M	B, C, W	D	S, T	P, R	DAL,MSI,SOA
	Resistance	Power	Char.	Term.	Res. Tol./	Level 1	Level 2	
Part Number	Value (Ohms)	Rating (mW)	(^)	Type (@)	Multiplier (#)	FRL (&)	FRL (&)	Manufacturer

MIL-PRF-55342/9 (RM2512) Film Chip Resistors: 1,000 Ohms Through 9,760 Ohms

	Resistance	Power	Char.	Term.	Res. Tol./	Level 1	Level 2	
Part Number	Value (Ohms)	Rating (mW)	(^)	Type (@)	Multiplier (#)	FRL (&)	FRL (&)	Manufacturer
M55342^09@1#00&	1,000	500 (char. E, H) or 1000 (char. K, M)	E, H, K, M	B, C, W	E, H, K, N	S, T	P, R	DAL,MSI,SOA
M55342^09@1#02&	1,020	500 (char. E, H) or 1000 (char. K, M)	E, H, K, M	B, C, W	E	S, T	P, R	DAL,MSI,SOA
M55342^09@1#05&	1,050	500 (char. E, H) or 1000 (char. K, M)	E, H, K, M	B, C, W	E	S, T	P, R	DAL,MSI,SOA
M55342^09@1#07&	1,070	500 (char. E, H) or 1000 (char. K, M)	E, H, K, M	B, C, W	E	S, T	P, R	DAL,MSI,SOA
M55342^09@1#10&	1,100	500 (char. E, H) or 1000 (char. K, M)	E, H, K, M	B, C, W	E, H, K	S, T	P, R	DAL,MSI,SOA
M55342^09@1#13&	1,130	500 (char. E, H) or 1000 (char. K, M)	E, H, K, M	B, C, W	E	S, T	P, R	DAL,MSI,SOA
M55342^09@1#15&	1,150	500 (char. E, H) or 1000 (char. K, M)	E, H, K, M	B, C, W	E	S, T	P, R	DAL,MSI,SOA
M55342^09@1#18&	1,180	500 (char. E, H) or 1000 (char. K, M)	E, H, K, M	B, C, W	E	S, T	P, R	DAL,MSI,SOA
M55342^09@1#20&	1,200	500 (char. E, H) or 1000 (char. K, M)	E, H, K, M	B, C, W	H, K, N	S, T	P, R	DAL,MSI,SOA
	Resistance	Power	Char.	Term.	Res. Tol./	Level 1	Level 2	
Part Number	Value (Ohms)	Rating (mW)	(^)	Type (@)	Multiplier (#)	FRL (&)	FRL (&)	Manufacturer
M55342^09@1#21&	1,210	500 (char. E, H) or 1000 (char. K, M)	E, H, K, M	B, C, W	E	S, T	P, R	DAL,MSI,SOA
M55342^09@1#24&	1,240	500 (char. E, H) or 1000 (char. K, M)	E, H, K, M	B, C, W	E	S, T	P, R	DAL,MSI,SOA
M55342^09@1#27&	1,270	500 (char. E, H) or 1000 (char. K, M)	E, H, K, M	B, C, W	E	S, T	P, R	DAL,MSI,SOA
M55342^09@1#30&	1,300	500 (char. E, H) or 1000 (char. K, M)	E, H, K, M	B, C, W	E, H, K	S, T	P, R	DAL,MSI,SOA
M55342^09@1#33&	1,330	500 (char. E, H) or 1000 (char. K, M)	E, H, K, M	B, C, W	E	S, T	P, R	DAL,MSI,SOA
M55342^09@1#37&	1,370	500 (char. E, H) or 1000 (char. K, M)	E, H, K, M	B, C, W	E	S, T	P, R	DAL,MSI,SOA
M55342^09@1#40&	1,400	500 (char. E, H) or 1000 (char. K, M)	E, H, K, M	B, C, W	E	S, T	P, R	DAL,MSI,SOA
M55342^09@1#43&	1,430	500 (char. E, H) or 1000 (char. K, M)	E, H, K, M	B, C, W	E	S, T	P, R	DAL,MSI,SOA
M55342^09@1#47&	1,470	500 (char. E, H) or 1000 (char. K, M)	E, H, K, M	B, C, W	E	S, T	P, R	DAL,MSI,SOA
	Resistance	Power	Char.	Term.	Res. Tol./	Level 1	Level 2	
Part Number	Value (Ohms)	Rating (mW)	(^)	Type (@)	Multiplier (#)	FRL (&)	FRL (&)	Manufacturer
M55342^09@1#50&	1,500	500 (char. E, H) or 1000 (char. K, M)	E, H, K, M	B, C, W	E, H, K, N	S, T	P, R	DAL,MSI,SOA
M55342^09@1#54&	1,540	500 (char. E, H) or 1000 (char. K, M)	E, H, K, M	B, C, W	E	S, T	P, R	DAL,MSI,SOA
M55342^09@1#58&	1,580	500 (char. E, H) or 1000 (char. K, M)	E, H, K, M	B, C, W	E	S, T	P, R	DAL,MSI,SOA
M55342^09@1#60&	1,600	500 (char. E, H) or 1000 (char. K, M)	E, H, K, M	B, C, W	H, K	S, T	P, R	DAL,MSI,SOA
M55342^09@1#62&	1,620	500 (char. E, H) or 1000 (char. K, M)	E, H, K, M	B, C, W	E	S, T	P, R	DAL,MSI,SOA
M55342^09@1#65&	1,650	500 (char. E, H) or 1000 (char. K, M)	E, H, K, M	B, C, W	E	S, T	P, R	DAL,MSI,SOA
M55342^09@1#69&	1,690	500 (char. E, H) or 1000 (char. K, M)	E, H, K, M	B, C, W	E	S, T	P, R	DAL,MSI,SOA

M55342^09@1#74&	1,740	500 (char. E, H) or 1000 (char. K, M)	E, H, K, M	B, C, W	E	S, T	P, R	DAL,MSI,SOA
M55342^09@1#78&	1,780	500 (char. E, H) or 1000 (char. K, M)	E, H, K, M	B, C, W	E	S, T	P, R	DAL,MSI,SOA
	Resistance	Power	Char.	Term.	Res. Tol./	Level 1	Level 2	
Part Number	Value (Ohms)	Rating (mW)	(^)	Type (@)	Multiplier (#)	FRL (&)	FRL (&)	Manufacturer
M55342^09@1#80&	1,800	500 (char. E, H) or 1000 (char. K, M)	E, H, K, M	B, C, W	H, K, N	S, T	P, R	DAL,MSI,SOA
M55342^09@1#82&	1,820	500 (char. E, H) or 1000 (char. K, M)	E, H, K, M	B, C, W	E	S, T	P, R	DAL,MSI,SOA
M55342^09@1#87&	1,870	500 (char. E, H) or 1000 (char. K, M)	E, H, K, M	B, C, W	E	S, T	P, R	DAL,MSI,SOA
M55342^09@1#91&	1,910	500 (char. E, H) or 1000 (char. K, M)	E, H, K, M	B, C, W	E	S, T	P, R	DAL,MSI,SOA
M55342^09@1#96&	1,960	500 (char. E, H) or 1000 (char. K, M)	E, H, K, M	B, C, W	E	S, T	P, R	DAL,MSI,SOA
M55342^09@2#00&	2,000	500 (char. E, H) or 1000 (char. K, M)	E, H, K, M	B, C, W	E, H, K, N	S, T	P, R	DAL,MSI,SOA
M55342^09@2#05&	2,050	500 (char. E, H) or 1000 (char. K, M)	E, H, K, M	B, C, W	E	S, T	P, R	DAL,MSI,SOA
M55342^09@2#10&	2,100	500 (char. E, H) or 1000 (char. K, M)	E, H, K, M	B, C, W	E	S, T	P, R	DAL,MSI,SOA
M55342^09@2#15&	2,150	500 (char. E, H) or 1000 (char. K, M)	E, H, K, M	B, C, W	E	S, T	P, R	DAL,MSI,SOA
	Resistance	Power	Char.	Term.	Res. Tol./	Level 1	Level 2	
Part Number	Value (Ohms)	Rating (mW)	(^)	Type (@)	Multiplier (#)	FRL (&)	FRL (&)	Manufacturer
M55342^09@2#20&	2,200	500 (char. E, H) or 1000 (char. K, M)	E, H, K, M	B, C, W	H, K, N	S, T	P, R	DAL,MSI,SOA
M55342^09@2#21&	2,210	500 (char. E, H) or 1000 (char. K, M)	E, H, K, M	B, C, W	E	S, T	P, R	DAL,MSI,SOA
M55342^09@2#26&	2,260	500 (char. E, H) or 1000 (char. K, M)	E, H, K, M	B, C, W	E	S, T	P, R	DAL,MSI,SOA
M55342^09@2#32&	2,320	500 (char. E, H) or 1000 (char. K, M)	E, H, K, M	B, C, W	E	S, T	P, R	DAL,MSI,SOA
M55342^09@2#37&	2,370	500 (char. E, H) or 1000 (char. K, M)	E, H, K, M	B, C, W	E	S, T	P, R	DAL,MSI,SOA
M55342^09@2#40&	2,400	500 (char. E, H) or 1000 (char. K, M)	E, H, K, M	B, C, W	H, K	S, T	P, R	DAL,MSI,SOA
M55342^09@2#43&	2,430	500 (char. E, H) or 1000 (char. K, M)	E, H, K, M	B, C, W	E	S, T	P, R	DAL,MSI,SOA
M55342^09@2#49&	2,490	500 (char. E, H) or 1000 (char. K, M)	E, H, K, M	B, C, W	E	S, T	P, R	DAL,MSI,SOA
M55342^09@2#55&	2,550	500 (char. E, H) or 1000 (char. K, M)	E, H, K, M	B, C, W	E	S, T	P, R	DAL,MSI,SOA
	Resistance	Power	Char.	Term.	Res. Tol./	Level 1	Level 2	
Part Number	Value (Ohms)	Rating (mW)	(^)	Type (@)	Multiplier (#)	FRL (&)	FRL (&)	Manufacturer
M55342^09@2#61&	2,610	500 (char. E, H) or 1000 (char. K, M)	E, H, K, M	B, C, W	E	S, T	P, R	DAL,MSI,SOA
M55342^09@2#67&	2,670	500 (char. E, H) or 1000 (char. K, M)	E, H, K, M	B, C, W	E	S, T	P, R	DAL,MSI,SOA
M55342^09@2#70&	2,700	500 (char. E, H) or 1000 (char. K, M)	E, H, K, M	B, C, W	H, K, N	S, T	P, R	DAL,MSI,SOA
M55342^09@2#74&	2,740	500 (char. E, H) or 1000 (char. K, M)	E, H, K, M	B, C, W	E	S, T	P, R	DAL,MSI,SOA
M55342^09@2#80&	2,800	500 (char. E, H) or 1000 (char. K, M)	E, H, K, M	B, C, W	E	S, T	P, R	DAL,MSI,SOA
M55342^09@2#87&	2,870	500 (char. E, H) or 1000 (char. K, M)	E, H, K, M	B, C, W	E	S, T	P, R	DAL,MSI,SOA
M55342^09@2#94&	2,940	500 (char. E, H) or 1000 (char. K, M)	E, H, K, M	B, C, W	E	S, T	P, R	DAL,MSI,SOA
M55342^09@3#00&	3,000	500 (char. E, H) or 1000 (char. K, M)	E, H, K, M	B, C, W	H, K	S, T	P, R	DAL,MSI,SOA
M55342^09@3#01&	3,010	500 (char. E, H) or 1000 (char. K, M)	E, H, K, M	B, C, W	E	S, T	P, R	DAL,MSI,SOA
	Resistance	Power	Char.	Term.	Res. Tol./	Level 1	Level 2	
Part Number	Value (Ohms)	Rating (mW)	(^)	Type (@)	Multiplier (#)	FRL (&)	FRL (&)	Manufacturer
M55342^09@3#09&	3,090	500 (char. E, H) or 1000 (char. K, M)	E, H, K, M	B, C, W	E	S, T	P, R	DAL,MSI,SOA
M55342^09@3#16&	3,160	500 (char. E, H) or 1000 (char. K, M)	E, H, K, M	B, C, W	E	S, T	P, R	DAL,MSI,SOA
M55342^09@3#24&	3,240	500 (char. E, H) or 1000 (char. K, M)	E, H, K, M	B, C, W	E	S, T	P, R	DAL,MSI,SOA
M55342^09@3#30&	3,300	500 (char. E, H) or 1000 (char. K, M)	E, H, K, M	B, C, W	H, K, N	S, T	P, R	DAL,MSI,SOA
M55342^09@3#32&	3,320	500 (char. E, H) or 1000 (char. K, M)	E, H, K, M	B, C, W	E	S, T	P, R	DAL,MSI,SOA
M55342^09@3#40&	3,400	500 (char. E, H) or 1000 (char. K, M)	E, H, K, M	B, C, W	E	S, T	P, R	DAL,MSI,SOA
M55342^09@3#48&	3,480	500 (char. E, H) or 1000 (char. K, M)	E, H, K, M	B, C, W	E	S, T	P, R	DAL,MSI,SOA
M55342^09@3#57&	3,570	500 (char. E, H) or 1000 (char. K, M)	E, H, K, M	B, C, W	E	S, T	P, R	DAL,MSI,SOA
M55342^09@3#60&	3,600	500 (char. E, H) or 1000 (char. K, M)	E, H, K, M	B, C, W	H, K	S, T	P, R	DAL,MSI,SOA
	Resistance	Power	Char.	Term.	Res. Tol./	Level 1	Level 2	

Part Number	Value (Ohms)	Rating (mW)	(^)	Type (@)	Multiplier (#)	FRL (&)	FRL (&)	Manufacturer
M55342^09@3#65&	3,650	500 (char. E, H) or 1000 (char. K, M)	E, H, K, M	B, C, W	E	S, T	P, R	DAL,MSI,SOA
M55342^09@3#74&	3,740	500 (char. E, H) or 1000 (char. K, M)	E, H, K, M	B, C, W	E	S, T	P, R	DAL,MSI,SOA
M55342^09@3#83&	3,830	500 (char. E, H) or 1000 (char. K, M)	E, H, K, M	B, C, W	E	S, T	P, R	DAL,MSI,SOA
M55342^09@3#90&	3,900	500 (char. E, H) or 1000 (char. K, M)	E, H, K, M	B, C, W	H, K, N	S, T	P, R	DAL,MSI,SOA
M55342^09@3#92&	3,920	500 (char. E, H) or 1000 (char. K, M)	E, H, K, M	B, C, W	E	S, T	P, R	DAL,MSI,SOA
M55342^09@4#02&	4,020	500 (char. E, H) or 1000 (char. K, M)	E, H, K, M	B, C, W	E	S, T	P, R	DAL,MSI,SOA
M55342^09@4#12&	4,120	500 (char. E, H) or 1000 (char. K, M)	E, H, K, M	B, C, W	E	S, T	P, R	DAL,MSI,SOA
M55342^09@4#22&	4,220	500 (char. E, H) or 1000 (char. K, M)	E, H, K, M	B, C, W	E	S, T	P, R	DAL,MSI,SOA
M55342^09@4#30&	4,300	500 (char. E, H) or 1000 (char. K, M)	E, H, K, M	B, C, W	H, K	S, T	P, R	DAL,MSI,SOA
	Resistance	Power	Char.	Term.	Res. Tol./	Level 1	Level 2	
Part Number	Value (Ohms)	Rating (mW)	(^)	Type (@)	Multiplier (#)	FRL (&)	FRL (&)	Manufacturer
M55342^09@4#32&	4,320	500 (char. E, H) or 1000 (char. K, M)	E, H, K, M	B, C, W	E	S, T	P, R	DAL,MSI,SOA
M55342^09@4#42&	4,420	500 (char. E, H) or 1000 (char. K, M)	E, H, K, M	B, C, W	E	S, T	P, R	DAL,MSI,SOA
M55342^09@4#53&	4,530	500 (char. E, H) or 1000 (char. K, M)	E, H, K, M	B, C, W	E	S, T	P, R	DAL,MSI,SOA
M55342^09@4#64&	4,640	500 (char. E, H) or 1000 (char. K, M)	E, H, K, M	B, C, W	E	S, T	P, R	DAL,MSI,SOA
M55342^09@4#70&	4,700	500 (char. E, H) or 1000 (char. K, M)	E, H, K, M	B, C, W	H, K, N	S, T	P, R	DAL,MSI,SOA
M55342^09@4#75&	4,750	500 (char. E, H) or 1000 (char. K, M)	E, H, K, M	B, C, W	E	S, T	P, R	DAL,MSI,SOA
M55342^09@4#87&	4,870	500 (char. E, H) or 1000 (char. K, M)	E, H, K, M	B, C, W	E	S, T	P, R	DAL,MSI,SOA
M55342^09@4#99&	4,990	500 (char. E, H) or 1000 (char. K, M)	E, H, K, M	B, C, W	E	S, T	P, R	DAL,MSI,SOA
M55342^09@5#10&	5,100	500 (char. E, H) or 1000 (char. K, M)	E, H, K, M	B, C, W	H, K	S, T	P, R	DAL,MSI,SOA
	Resistance	Power	Char.	Term.	Res. Tol./	Level 1	Level 2	
Part Number	Value (Ohms)	Rating (mW)	(^)	Type (@)	Multiplier (#)	FRL (&)	FRL (&)	Manufacturer
M55342^09@5#11&	5,110	500 (char. E, H) or 1000 (char. K, M)	E, H, K, M	B, C, W	E	S, T	P, R	DAL,MSI,SOA
M55342^09@5#23&	5,230	500 (char. E, H) or 1000 (char. K, M)	E, H, K, M	B, C, W	E	S, T	P, R	DAL,MSI,SOA
M55342^09@5#36&	5,360	500 (char. E, H) or 1000 (char. K, M)	E, H, K, M	B, C, W	E	S, T	P, R	DAL,MSI,SOA
M55342^09@5#49&	5,490	500 (char. E, H) or 1000 (char. K, M)	E, H, K, M	B, C, W	E	S, T	P, R	DAL,MSI,SOA
M55342^09@5#60&	5,600	500 (char. E, H) or 1000 (char. K, M)	E, H, K, M	B, C, W	H, K, N	S, T	P, R	DAL,MSI,SOA
M55342^09@5#62&	5,620	500 (char. E, H) or 1000 (char. K, M)	E, H, K, M	B, C, W	E	S, T	P, R	DAL,MSI,SOA
M55342^09@5#76&	5,760	500 (char. E, H) or 1000 (char. K, M)	E, H, K, M	B, C, W	E	S, T	P, R	DAL,MSI,SOA
M55342^09@5#90&	5,900	500 (char. E, H) or 1000 (char. K, M)	E, H, K, M	B, C, W	E	S, T	P, R	DAL,MSI,SOA
M55342^09@6#04&	6,040	500 (char. E, H) or 1000 (char. K, M)	E, H, K, M	B, C, W	E	S, T	P, R	DAL,MSI,SOA
	Resistance	Power	Char.	Term.	Res. Tol./	Level 1	Level 2	
Part Number	Value (Ohms)	Rating (mW)	(^)	Type (@)	Multiplier (#)	FRL (&)	FRL (&)	Manufacturer
M55342^09@6#19&	6,190	500 (char. E, H) or 1000 (char. K, M)	E, H, K, M	B, C, W	E	S, T	P, R	DAL,MSI,SOA
M55342^09@6#20&	6,200	500 (char. E, H) or 1000 (char. K, M)	E, H, K, M	B, C, W	H, K	S, T	P, R	DAL,MSI,SOA
M55342^09@6#34&	6,340	500 (char. E, H) or 1000 (char. K, M)	E, H, K, M	B, C, W	E	S, T	P, R	DAL,MSI,SOA
M55342^09@6#49&	6,490	500 (char. E, H) or 1000 (char. K, M)	E, H, K, M	B, C, W	E	S, T	P, R	DAL,MSI,SOA
M55342^09@6#65&	6,650	500 (char. E, H) or 1000 (char. K, M)	E, H, K, M	B, C, W	E	S, T	P, R	DAL,MSI,SOA
M55342^09@6#80&	6,800	500 (char. E, H) or 1000 (char. K, M)	E, H, K, M	B, C, W	H, K, N	S, T	P, R	DAL,MSI,SOA
M55342^09@6#81&	6,810	500 (char. E, H) or 1000 (char. K, M)	E, H, K, M	B, C, W	E	S, T	P, R	DAL,MSI,SOA
M55342^09@6#98&	6,980	500 (char. E, H) or 1000 (char. K, M)	E, H, K, M	B, C, W	E	S, T	P, R	DAL,MSI,SOA
M55342^09@7#15&	7,150	500 (char. E, H) or 1000 (char. K, M)	E, H, K, M	B, C, W	E	S, T	P, R	DAL,MSI,SOA
	Resistance	Power	Char.	Term.	Res. Tol./	Level 1	Level 2	
Part Number	Value (Ohms)	Rating (mW)	(^)	Type (@)	Multiplier (#)	FRL (&)	FRL (&)	Manufacturer
M55342^09@7#32&	7,320	500 (char. E, H) or 1000 (char. K, M)	E, H, K, M	B, C, W	E	S, T	P, R	DAL,MSI,SOA
M55342^09@7#50&	7,500	500 (char. E, H) or 1000 (char. K, M)	E, H, K, M	B, C, W	E, H, K	S, T	P, R	DAL,MSI,SOA

M55342^09@7#68&	7,680	500 (char. E, H) or 1000 (char. K, M)	E, H, K, M	B, C, W	E	S, T	P, R	DAL,MSI,SOA
M55342^09@7#87&	7,870	500 (char. E, H) or 1000 (char. K, M)	E, H, K, M	B, C, W	E	S, T	P, R	DAL,MSI,SOA
M55342^09@8#06&	8,060	500 (char. E, H) or 1000 (char. K, M)	E, H, K, M	B, C, W	E	S, T	P, R	DAL,MSI,SOA
M55342^09@8#20&	8,200	500 (char. E, H) or 1000 (char. K, M)	E, H, K, M	B, C, W	H, K, N	S, T	P, R	DAL,MSI,SOA
M55342^09@8#25&	8,250	500 (char. E, H) or 1000 (char. K, M)	E, H, K, M	B, C, W	E	S, T	P, R	DAL,MSI,SOA
M55342^09@8#45&	8,450	500 (char. E, H) or 1000 (char. K, M)	E, H, K, M	B, C, W	E	S, T	P, R	DAL,MSI,SOA
M55342^09@8#66&	8,660	500 (char. E, H) or 1000 (char. K, M)	E, H, K, M	B, C, W	E	S, T	P, R	DAL,MSI,SOA
	Resistance	Power	Char.	Term.	Res. Tol./	Level 1	Level 2	
Part Number	Value (Ohms)	Rating (mW)	(^)	Type (@)	Multiplier (#)	FRL (&)	FRL (&)	Manufacturer
M55342^09@8#87&	8,870	500 (char. E, H) or 1000 (char. K, M)	E, H, K, M	B, C, W	E	S, T	P, R	DAL,MSI,SOA
M55342^09@9#09&	9,090	500 (char. E, H) or 1000 (char. K, M)	E, H, K, M	B, C, W	E	S, T	P, R	DAL,MSI,SOA
M55342^09@9#10&	9,100	500 (char. E, H) or 1000 (char. K, M)	E, H, K, M	B, C, W	H, K	S, T	P, R	DAL,MSI,SOA
M55342^09@9#31&	9,310	500 (char. E, H) or 1000 (char. K, M)	E, H, K, M	B, C, W	E	S, T	P, R	DAL,MSI,SOA
M55342^09@9#53&	9,530	500 (char. E, H) or 1000 (char. K, M)	E, H, K, M	B, C, W	E	S, T	P, R	DAL,MSI,SOA
M55342^09@9#76&	9,760	500 (char. E, H) or 1000 (char. K, M)	E, H, K, M	B, C, W	E	S, T	P, R	DAL,MSI,SOA
	Resistance	Power	Char.	Term.	Res. Tol./	Level 1	Level 2	
Part Number	Value (Ohms)	Rating (mW)	(^)	Type (@)	Multiplier (#)	FRL (&)	FRL (&)	Manufacturer

MIL-PRF-55342/9 (RM2512) Film Chip Resistors: 10,000 Ohms Through 97,600 Ohms

	Resistance	Power	Char.	Term.	Res. Tol./	Level 1	Level 2		
Part Number	Value (Ohms)	Rating (mW)	(^)	Type (@)	Multiplier (#)	FRL (&)	FRL (&)		Manufacturer
M55342^09@10#0&	10,000	500 (char. E, H) or 1000 (char. K, M)	E, H, K, M	B, C, W	E, H, K, N	S, T	P, R		DAL,MSI,SOA
M55342^09@10#2&	10,200	500 (char. E, H) or 1000 (char. K, M)	E, H, K, M	B, C, W	E	S, T	P, R		DAL,MSI,SOA
M55342^09@10#5&	10,500	500 (char. E, H) or 1000 (char. K, M)	E, H, K, M	B, C, W	E	S, T	P, R		DAL,MSI,SOA
M55342^09@10#7&	10,700	500 (char. E, H) or 1000 (char. K, M)	E, H, K, M	B, C, W	E	S, T	P, R		DAL,MSI,SOA
M55342^09@11#0&	11,000	500 (char. E, H) or 1000 (char. K, M)	E, H, K, M	B, C, W	E, H, K	S, T	P, R		DAL,MSI,SOA
M55342^09@11#3&	11,300	500 (char. E, H) or 1000 (char. K, M)	E, H, K, M	B, C, W	E	S, T	P, R		DAL,MSI,SOA
M55342^09@11#5&	11,500	500 (char. E, H) or 1000 (char. K, M)	E, H, K, M	B, C, W	E	S, T	P, R		DAL,MSI,SOA
M55342^09@11#8&	11,800	500 (char. E, H) or 1000 (char. K, M)	E, H, K, M	B, C, W	E	S, T	P, R		DAL,MSI,SOA
M55342^09@12#0&	12,000	500 (char. E, H) or 1000 (char. K, M)	E, H, K, M	B, C, W	H, K, N	S, T	P, R		DAL,MSI,SOA
	Resistance	Power	Char.	Term.	Res. Tol./	Level 1	Level 2		
Part Number	Value (Ohms)	Rating (mW)	(^)	Type (@)	Multiplier (#)	FRL (&)	FRL (&)		Manufacturer
M55342^09@12#1&	12,100	500 (char. E, H) or 1000 (char. K, M)	E, H, K, M	B, C, W	E	S, T	P, R		DAL,MSI,SOA
M55342^09@12#4&	12,400	500 (char. E, H) or 1000 (char. K, M)	E, H, K, M	B, C, W	E	S, T	P, R		DAL,MSI,SOA
M55342^09@12#7&	12,700	500 (char. E, H) or 1000 (char. K, M)	E, H, K, M	B, C, W	E	S, T	P, R		DAL,MSI,SOA
M55342^09@13#0&	13,000	500 (char. E, H) or 1000 (char. K, M)	E, H, K, M	B, C, W	E, H, K	S, T	P, R		DAL,MSI,SOA
M55342^09@13#3&	13,300	500 (char. E, H) or 1000 (char. K, M)	E, H, K, M	B, C, W	E	S, T	P, R		DAL,MSI,SOA
M55342^09@13#7&	13,700	500 (char. E, H) or 1000 (char. K, M)	E, H, K, M	B, C, W	E	S, T	P, R		DAL,MSI,SOA
M55342^09@14#0&	14,000	500 (char. E, H) or 1000 (char. K, M)	E, H, K, M	B, C, W	E	S, T	P, R		DAL,MSI,SOA
M55342^09@14#3&	14,300	500 (char. E, H) or 1000 (char. K, M)	E, H, K, M	B, C, W	E	S, T	P, R		DAL,MSI,SOA
M55342^09@14#7&	14,700	500 (char. E, H) or 1000 (char. K, M)	E, H, K, M	B, C, W	E	S, T	P, R		DAL,MSI,SOA
	Resistance	Power	Char.	Term.	Res. Tol./	Level 1	Level 2		
Part Number	Value (Ohms)	Rating (mW)	(^)	Type (@)	Multiplier (#)	FRL (&)	FRL (&)		Manufacturer
M55342^09@15#0&	15,000	500 (char. E, H) or 1000 (char. K, M)	E, H, K, M	B, C, W	E, H, K, N	S, T	P, R		DAL,MSI,SOA

M55342^09@15#4&	15,400	500 (char. E, H) or 1000 (char. K, M)	E, H, K, M	B, C, W	E	S, T	P, R		DAL,MSI,SOA
M55342^09@15#8&	15,800	500 (char. E, H) or 1000 (char. K, M)	E, H, K, M	B, C, W	E	S, T	P, R		DAL,MSI,SOA
M55342^09@16#0&	16,000	500 (char. E, H) or 1000 (char. K, M)	E, H, K, M	B, C, W	H, K	S, T	P, R		DAL,MSI,SOA
M55342^09@16#2&	16,200	500 (char. E, H) or 1000 (char. K, M)	E, H, K, M	B, C, W	E	S, T	P, R		DAL,MSI,SOA
M55342^09@16#5&	16,500	500 (char. E, H) or 1000 (char. K, M)	E, H, K, M	B, C, W	E	S, T	P, R		DAL,MSI,SOA
M55342^09@16#9&	16,900	500 (char. E, H) or 1000 (char. K, M)	E, H, K, M	B, C, W	E	S, T	P, R		DAL,MSI,SOA
M55342^09@17#4&	17,400	500 (char. E, H) or 1000 (char. K, M)	E, H, K, M	B, C, W	E	S, T	P, R		DAL,MSI,SOA
M55342^09@17#8&	17,800	500 (char. E, H) or 1000 (char. K, M)	E, H, K, M	B, C, W	E	S, T	P, R		DAL,MSI,SOA
	Resistance	Power	Char.	Term.	Res. Tol./	Level 1	Level 2		
Part Number	Value (Ohms)	Rating (mW)	(^)	Type (@)	Multiplier (#)	FRL (&)	FRL (&)		Manufacturer
M55342^09@18#0&	18,000	500 (char. E, H) or 1000 (char. K, M)	E, H, K, M	B, C, W	H, K, N	S, T	P, R		DAL,MSI,SOA
M55342^09@18#2&	18,200	500 (char. E, H) or 1000 (char. K, M)	E, H, K, M	B, C, W	E	S, T	P, R		DAL,MSI,SOA
M55342^09@18#7&	18,700	500 (char. E, H) or 1000 (char. K, M)	E, H, K, M	B, C, W	E	S, T	P, R		DAL,MSI,SOA
M55342^09@19#1&	19,100	500 (char. E, H) or 1000 (char. K, M)	E, H, K, M	B, C, W	E	S, T	P, R		DAL,MSI,SOA
M55342^09@19#6&	19,600	500 (char. E, H) or 1000 (char. K, M)	E, H, K, M	B, C, W	E	S, T	P, R		DAL,MSI,SOA
M55342^09@20#0&	20,000	500 (char. E, H) or 1000 (char. K, M)	E, H, K, M	B, C, W	E, H, K, N	S, T	P, R		DAL,MSI,SOA
M55342^09@20#5&	20,500	500 (char. E, H) or 1000 (char. K, M)	E, H, K, M	B, C, W	E	S, T	P, R		DAL,MSI,SOA
M55342^09@21#0&	21,000	500 (char. E, H) or 1000 (char. K, M)	E, H, K, M	B, C, W	E	S, T	P, R		DAL,MSI,SOA
M55342^09@21#5&	21,500	500 (char. E, H) or 1000 (char. K, M)	E, H, K, M	B, C, W	E	S, T	P, R		DAL,MSI,SOA
	Resistance	Power	Char.	Term.	Res. Tol./	Level 1	Level 2		
Part Number	Value (Ohms)	Rating (mW)	(^)	Type (@)	Multiplier (#)	FRL (&)	FRL (&)		Manufacturer
M55342^09@22#0&	22,000	500 (char. E, H) or 1000 (char. K, M)	E, H, K, M	B, C, W	H, K, N	S, T	P, R		DAL,MSI,SOA
M55342^09@22#1&	22,100	500 (char. E, H) or 1000 (char. K, M)	E, H, K, M	B, C, W	E	S, T	P, R		DAL,MSI,SOA
M55342^09@22#6&	22,600	500 (char. E, H) or 1000 (char. K, M)	E, H, K, M	B, C, W	E	S, T	P, R		DAL,MSI,SOA
M55342^09@23#2&	23,200	500 (char. E, H) or 1000 (char. K, M)	E, H, K, M	B, C, W	E	S, T	P, R		DAL,MSI,SOA
M55342^09@23#7&	23,700	500 (char. E, H) or 1000 (char. K, M)	E, H, K, M	B, C, W	E	S, T	P, R		DAL,MSI,SOA
M55342^09@24#0&	24,000	500 (char. E, H) or 1000 (char. K, M)	E, H, K, M	B, C, W	H, K	S, T	P, R		DAL,MSI,SOA
M55342^09@24#3&	24,300	500 (char. E, H) or 1000 (char. K, M)	E, H, K, M	B, C, W	E	S, T	P, R		DAL,MSI,SOA
M55342^09@24#9&	24,900	500 (char. E, H) or 1000 (char. K, M)	E, H, K, M	B, C, W	E	S, T	P, R		DAL,MSI,SOA
M55342^09@25#5&	25,500	500 (char. E, H) or 1000 (char. K, M)	E, H, K, M	B, C, W	E	S, T	P, R		DAL,MSI,SOA
	Resistance	Power	Char.	Term.	Res. Tol./	Level 1	Level 2		
Part Number	Value (Ohms)	Rating (mW)	(^)	Type (@)	Multiplier (#)	FRL (&)	FRL (&)		Manufacturer
M55342^09@26#1&	26,100	500 (char. E, H) or 1000 (char. K, M)	E, H, K, M	B, C, W	E	S, T	P, R		DAL,MSI,SOA
M55342^09@26#7&	26,700	500 (char. E, H) or 1000 (char. K, M)	E, H, K, M	B, C, W	E	S, T	P, R		DAL,MSI,SOA
M55342^09@27#0&	27,000	500 (char. E, H) or 1000 (char. K, M)	E, H, K, M	B, C, W	H, K, N	S, T	P, R		DAL,MSI,SOA
M55342^09@27#4&	27,400	500 (char. E, H) or 1000 (char. K, M)	E, H, K, M	B, C, W	E	S, T	P, R		DAL,MSI,SOA
M55342^09@28#0&	28,000	500 (char. E, H) or 1000 (char. K, M)	E, H, K, M	B, C, W	E	S, T	P, R		DAL,MSI,SOA
M55342^09@28#7&	28,700	500 (char. E, H) or 1000 (char. K, M)	E, H, K, M	B, C, W	E	S, T	P, R		DAL,MSI,SOA
M55342^09@29#4&	29,400	500 (char. E, H) or 1000 (char. K, M)	E, H, K, M	B, C, W	E	S, T	P, R		DAL,MSI,SOA
M55342^09@30#0&	30,000	500 (char. E, H) or 1000 (char. K, M)	E, H, K, M	B, C, W	H, K	S, T	P, R		DAL,MSI,SOA
M55342^09@30#1&	30,100	500 (char. E, H) or 1000 (char. K, M)	E, H, K, M	B, C, W	E	S, T	P, R		DAL,MSI,SOA
	Resistance	Power	Char.	Term.	Res. Tol./	Level 1	Level 2		
Part Number	Value (Ohms)	Rating (mW)	(^)	Type (@)	Multiplier (#)	FRL (&)	FRL (&)		Manufacturer
M55342^09@30#9&	30,900	500 (char. E, H) or 1000 (char. K, M)	E, H, K, M	B, C, W	E	S, T	P, R		DAL,MSI,SOA
M55342^09@31#6&	31,600	500 (char. E, H) or 1000 (char. K, M)	E, H, K, M	B, C, W	E	S, T	P, R		DAL,MSI,SOA
M55342^09@32#4&	32,400	500 (char. E, H) or 1000 (char. K, M)	E, H, K, M	B, C, W	E	S, T	P, R		DAL,MSI,SOA
M55342^09@33#0&	33,000	500 (char. E, H) or 1000 (char. K, M)	E, H, K, M	B, C, W	H, K, N	S, T	P, R		DAL,MSI,SOA

M55342^09@33#2&	33,200	500 (char. E, H) or 1000 (char. K, M)	E, H, K, M	B, C, W	E	S, T	P, R		DAL,MSI,SOA
M55342^09@34#0&	34,000	500 (char. E, H) or 1000 (char. K, M)	E, H, K, M	B, C, W	E	S, T	P, R		DAL,MSI,SOA
M55342^09@34#8&	34,800	500 (char. E, H) or 1000 (char. K, M)	E, H, K, M	B, C, W	E	S, T	P, R		DAL,MSI,SOA
M55342^09@35#7&	35,700	500 (char. E, H) or 1000 (char. K, M)	E, H, K, M	B, C, W	E	S, T	P, R		DAL,MSI,SOA
M55342^09@36#0&	36,000	500 (char. E, H) or 1000 (char. K, M)	E, H, K, M	B, C, W	H, K	S, T	P, R		DAL,MSI,SOA
	Resistance	Power	Char.	Term.	Res. Tol./	Level 1	Level 2		
Part Number	Value (Ohms)	Rating (mW)	(^)	Type (@)	Multiplier (#)	FRL (&)	FRL (&)		Manufacturer
M55342^09@36#5&	36,500	500 (char. E, H) or 1000 (char. K, M)	E, H, K, M	B, C, W	E	S, T	P, R		DAL,MSI,SOA
M55342^09@37#4&	37,400	500 (char. E, H) or 1000 (char. K, M)	E, H, K, M	B, C, W	E	S, T	P, R		DAL,MSI,SOA
M55342^09@38#3&	38,300	500 (char. E, H) or 1000 (char. K, M)	E, H, K, M	B, C, W	E	S, T	P, R		DAL,MSI,SOA
M55342^09@39#0&	39,000	500 (char. E, H) or 1000 (char. K, M)	E, H, K, M	B, C, W	H, K, N	S, T	P, R		DAL,MSI,SOA
M55342^09@39#2&	39,200	500 (char. E, H) or 1000 (char. K, M)	E, H, K, M	B, C, W	E	S, T	P, R		DAL,MSI,SOA
M55342^09@40#2&	40,200	500 (char. E, H) or 1000 (char. K, M)	E, H, K, M	B, C, W	E	S, T	P, R		DAL,MSI,SOA
M55342^09@41#2&	41,200	500 (char. E, H) or 1000 (char. K, M)	E, H, K, M	B, C, W	E	S, T	P, R		DAL,MSI,SOA
M55342^09@42#2&	42,200	500 (char. E, H) or 1000 (char. K, M)	E, H, K, M	B, C, W	E	S, T	P, R		DAL,MSI,SOA
M55342^09@43#0&	43,000	500 (char. E, H) or 1000 (char. K, M)	E, H, K, M	B, C, W	H, K	S, T	P, R		DAL,MSI,SOA
	Resistance	Power	Char.	Term.	Res. Tol./	Level 1	Level 2		
Part Number	Value (Ohms)	Rating (mW)	(^)	Type (@)	Multiplier (#)	FRL (&)	FRL (&)		Manufacturer
M55342^09@43#2&	43,200	500 (char. E, H) or 1000 (char. K, M)	E, H, K, M	B, C, W	E	S, T	P, R		DAL,MSI,SOA
M55342^09@44#2&	44,200	500 (char. E, H) or 1000 (char. K, M)	E, H, K, M	B, C, W	E	S, T	P, R		DAL,MSI,SOA
M55342^09@45#3&	45,300	500 (char. E, H) or 1000 (char. K, M)	E, H, K, M	B, C, W	E	S, T	P, R		DAL,MSI,SOA
M55342^09@46#4&	46,400	500 (char. E, H) or 1000 (char. K, M)	E, H, K, M	B, C, W	E	S, T	P, R		DAL,MSI,SOA
M55342^09@47#0&	47,000	500 (char. E, H) or 1000 (char. K, M)	E, H, K, M	B, C, W	H, K, N	S, T	P, R		DAL,MSI,SOA
M55342^09@47#5&	47,500	500 (char. E, H) or 1000 (char. K, M)	E, H, K, M	B, C, W	E	S, T	P, R		DAL,MSI,SOA
M55342^09@48#7&	48,700	500 (char. E, H) or 1000 (char. K, M)	E, H, K, M	B, C, W	E	S, T	P, R		DAL,MSI,SOA
M55342^09@49#9&	49,900	500 (char. E, H) or 1000 (char. K, M)	E, H, K, M	B, C, W	E	S, T	P, R		DAL,MSI,SOA
M55342^09@51#0&	51,000	500 (char. E, H) or 1000 (char. K, M)	E, H, K, M	B, C, W	H, K	S, T	P, R		DAL,MSI,SOA
	Resistance	Power	Char.	Term.	Res. Tol./	Level 1	Level 2		
Part Number	Value (Ohms)	Rating (mW)	(^)	Type (@)	Multiplier (#)	FRL (&)	FRL (&)		Manufacturer
M55342^09@51#1&	51,100	500 (char. E, H) or 1000 (char. K, M)	E, H, K, M	B, C, W	E	S, T	P, R		DAL,MSI,SOA
M55342^09@52#3&	52,300	500 (char. E, H) or 1000 (char. K, M)	E, H, K, M	B, C, W	E	S, T	P, R		DAL,MSI,SOA
M55342^09@53#6&	53,600	500 (char. E, H) or 1000 (char. K, M)	E, H, K, M	B, C, W	E	S, T	P, R		DAL,MSI,SOA
M55342^09@54#9&	54,900	500 (char. E, H) or 1000 (char. K, M)	E, H, K, M	B, C, W	E	S, T	P, R		DAL,MSI,SOA
M55342^09@56#0&	56,000	500 (char. E, H) or 1000 (char. K, M)	E, H, K, M	B, C, W	H, K, N	S, T	P, R		DAL,MSI,SOA
M55342^09@56#2&	56,200	500 (char. E, H) or 1000 (char. K, M)	E, H, K, M	B, C, W	E	S, T	P, R		DAL,MSI,SOA
M55342^09@57#6&	57,600	500 (char. E, H) or 1000 (char. K, M)	E, H, K, M	B, C, W	E	S, T	P, R		DAL,MSI,SOA
M55342^09@59#0&	59,000	500 (char. E, H) or 1000 (char. K, M)	E, H, K, M	B, C, W	E	S, T	P, R		DAL,MSI,SOA
M55342^09@60#4&	60,400	500 (char. E, H) or 1000 (char. K, M)	E, H, K, M	B, C, W	E	S, T	P, R		DAL,MSI,SOA
	Resistance	Power	Char.	Term.	Res. Tol./	Level 1	Level 2		
Part Number	Value (Ohms)	Rating (mW)	(^)	Type (@)	Multiplier (#)	FRL (&)	FRL (&)		Manufacturer
M55342^09@61#9&	61,900	500 (char. E, H) or 1000 (char. K, M)	E, H, K, M	B, C, W	E	S, T	P, R		DAL,MSI,SOA
M55342^09@62#0&	62,000	500 (char. E, H) or 1000 (char. K, M)	E, H, K, M	B, C, W	H, K	S, T	P, R		DAL,MSI,SOA
M55342^09@63#4&	63,400	500 (char. E, H) or 1000 (char. K, M)	E, H, K, M	B, C, W	E	S, T	P, R		DAL,MSI,SOA
M55342^09@64#9&	64,900	500 (char. E, H) or 1000 (char. K, M)	E, H, K, M	B, C, W	E	S, T	P, R		DAL,MSI,SOA
M55342^09@66#5&	66,500	500 (char. E, H) or 1000 (char. K, M)	E, H, K, M	B, C, W	E	S, T	P, R		DAL,MSI,SOA
M55342^09@68#0&	68,000	500 (char. E, H) or 1000 (char. K, M)	E, H, K, M	B, C, W	H, K, N	S, T	P, R		DAL,MSI,SOA
M55342^09@68#1&	68,100	500 (char. E, H) or 1000 (char. K, M)	E, H, K, M	B, C, W	E	S, T	P, R		DAL,MSI,SOA

M55342^09@69#8&	69,800	500 (char. E, H) or 1000 (char. K, M)	E, H, K, M	B, C, W	E	S, T	P, R		DAL,MSI,SOA
M55342^09@71#5&	71,500	500 (char. E, H) or 1000 (char. K, M)	E, H, K, M	B, C, W	E	S, T	P, R		DAL,MSI,SOA
	Resistance	Power	Char.	Term.	Res. Tol./	Level 1	Level 2		
Part Number	Value (Ohms)	Rating (mW)	(^)	Type (@)	Multiplier (#)	FRL (&)	FRL (&)		Manufacturer
M55342^09@73#2&	73,200	500 (char. E, H) or 1000 (char. K, M)	E, H, K, M	B, C, W	E	S, T	P, R		DAL,MSI,SOA
M55342^09@75#0&	75,000	500 (char. E, H) or 1000 (char. K, M)	E, H, K, M	B, C, W	E, H, K	S, T	P, R		DAL,MSI,SOA
M55342^09@76#8&	76,800	500 (char. E, H) or 1000 (char. K, M)	E, H, K, M	B, C, W	E	S, T	P, R		DAL,MSI,SOA
M55342^09@78#7&	78,700	500 (char. E, H) or 1000 (char. K, M)	E, H, K, M	B, C, W	E	S, T	P, R		DAL,MSI,SOA
M55342^09@80#6&	80,600	500 (char. E, H) or 1000 (char. K, M)	E, H, K, M	B, C, W	E	S, T	P, R		DAL,MSI,SOA
M55342^09@82#0&	82,000	500 (char. E, H) or 1000 (char. K, M)	E, H, K, M	B, C, W	H, K, N	S, T	P, R		DAL,MSI,SOA
M55342^09@82#5&	82,500	500 (char. E, H) or 1000 (char. K, M)	E, H, K, M	B, C, W	E	S, T	P, R		DAL,MSI,SOA
M55342^09@84#5&	84,500	500 (char. E, H) or 1000 (char. K, M)	E, H, K, M	B, C, W	E	S, T	P, R		DAL,MSI,SOA
M55342^09@86#6&	86,600	500 (char. E, H) or 1000 (char. K, M)	E, H, K, M	B, C, W	E	S, T	P, R		DAL,MSI,SOA
	Resistance	Power	Char.	Term.	Res. Tol./	Level 1	Level 2		
Part Number	Value (Ohms)	Rating (mW)	(^)	Type (@)	Multiplier (#)	FRL (&)	FRL (&)		Manufacturer
M55342^09@88#7&	88,700	500 (char. E, H) or 1000 (char. K, M)	E, H, K, M	B, C, W	E	S, T	P, R		DAL,MSI,SOA
M55342^09@90#9&	90,900	500 (char. E, H) or 1000 (char. K, M)	E, H, K, M	B, C, W	E	S, T	P, R		DAL,MSI,SOA
M55342^09@91#0&	91,000	500 (char. E, H) or 1000 (char. K, M)	E, H, K, M	B, C, W	H, K	S, T	P, R		DAL,MSI,SOA
M55342^09@93#1&	93,100	500 (char. E, H) or 1000 (char. K, M)	E, H, K, M	B, C, W	E	S, T	P, R		DAL,MSI,SOA
M55342^09@95#3&	95,300	500 (char. E, H) or 1000 (char. K, M)	E, H, K, M	B, C, W	E	S, T	P, R		DAL,MSI,SOA
M55342^09@97#6&	97,600	500 (char. E, H) or 1000 (char. K, M)	E, H, K, M	B, C, W	E	S, T	P, R		DAL,MSI,SOA

MIL-PRF-55342/9 (RM2512) Film Chip Resistors: 100,000 Ohms Through 976,000 Ohms

	Resistance	Power	Char.	Term.	Res. Tol./	Level 1	Level 2		
Part Number	Value (Ohms)	Rating (mW)	(^)	Type (@)	Multiplier (#)	FRL (&)	FRL (&)		Manufacturer
M55342^09@100#&	100,000	500 (char. E, H) or 1000 (char. K, M)	E, H, K, M	B, C, W	E, H, K, N	S, T	P, R		DAL,MSI,SOA
M55342^09@102#&	102,000	500 (char. E, H) or 1000 (char. K, M)	E, H, K, M	B, C, W	E	S, T	P, R		DAL,MSI,SOA
M55342^09@105#&	105,000	500 (char. E, H) or 1000 (char. K, M)	E, H, K, M	B, C, W	E	S, T	P, R		DAL,MSI,SOA
M55342^09@107#&	107,000	500 (char. E, H) or 1000 (char. K, M)	E, H, K, M	B, C, W	E	S, T	P, R		DAL,MSI,SOA
M55342^09@110#&	110,000	500 (char. E, H) or 1000 (char. K, M)	E, H, K, M	B, C, W	E, H, K	S, T	P, R		DAL,MSI,SOA
M55342^09@113#&	113,000	500 (char. E, H) or 1000 (char. K, M)	E, H, K, M	B, C, W	E	S, T	P, R		DAL,MSI,SOA
M55342^09@115#&	115,000	500 (char. E, H) or 1000 (char. K, M)	E, H, K, M	B, C, W	E	S, T	P, R		DAL,MSI,SOA
M55342^09@118#&	118,000	500 (char. E, H) or 1000 (char. K, M)	E, H, K, M	B, C, W	E	S, T	P, R		DAL,MSI,SOA
M55342^09@120#&	120,000	500 (char. E, H) or 1000 (char. K, M)	E, H, K, M	B, C, W	H, K, N	S, T	P, R		DAL,MSI,SOA
	Resistance	Power	Char.	Term.	Res. Tol./	Level 1	Level 2		
Part Number	Value (Ohms)	Rating (mW)	(^)	Type (@)	Multiplier (#)	FRL (&)	FRL (&)		Manufacturer
M55342^09@121#&	121,000	500 (char. E, H) or 1000 (char. K, M)	E, H, K, M	B, C, W	E	S, T	P, R		DAL,MSI,SOA
M55342^09@124#&	124,000	500 (char. E, H) or 1000 (char. K, M)	E, H, K, M	B, C, W	E	S, T	P, R		DAL,MSI,SOA
M55342^09@127#&	127,000	500 (char. E, H) or 1000 (char. K, M)	E, H, K, M	B, C, W	E	S, T	P, R		DAL,MSI,SOA
M55342^09@130#&	130,000	500 (char. E, H) or 1000 (char. K, M)	E, H, K, M	B, C, W	E, H, K	S, T	P, R		DAL,MSI,SOA
M55342^09@133#&	133,000	500 (char. E, H) or 1000 (char. K, M)	E, H, K, M	B, C, W	E	S, T	P, R		DAL,MSI,SOA
M55342^09@137#&	137,000	500 (char. E, H) or 1000 (char. K, M)	E, H, K, M	B, C, W	E	S, T	P, R		DAL,MSI,SOA
M55342^09@140#&	140,000	500 (char. E, H) or 1000 (char. K, M)	E, H, K, M	B, C, W	E	S, T	P, R		DAL,MSI,SOA
M55342^09@143#&	143,000	500 (char. E, H) or 1000 (char. K, M)	E, H, K, M	B, C, W	E	S, T	P, R		DAL,MSI,SOA

M55342^09@147#&	147,000	500 (char. E, H) or 1000 (char. K, M)	E, H, K, M	B, C, W	E	S, T	P, R		DAL,MSI,SOA
	Resistance	Power	Char.	Term.	Res. Tol./	Level 1	Level 2		
Part Number	Value (Ohms)	Rating (mW)	(^)	Type (@)	Multiplier (#)	FRL (&)	FRL (&)		Manufacturer
M55342^09@150#&	150,000	500 (char. E, H) or 1000 (char. K, M)	E, H, K, M	B, C, W	E, H, K, N	S, T	P, R		DAL,MSI,SOA
M55342^09@154#&	154,000	500 (char. E, H) or 1000 (char. K, M)	E, H, K, M	B, C, W	E	S, T	P, R		DAL,MSI,SOA
M55342^09@158#&	158,000	500 (char. E, H) or 1000 (char. K, M)	E, H, K, M	B, C, W	E	S, T	P, R		DAL,MSI,SOA
M55342^09@160#&	160,000	500 (char. E, H) or 1000 (char. K, M)	E, H, K, M	B, C, W	H, K	S, T	P, R		DAL,MSI,SOA
M55342^09@162#&	162,000	500 (char. E, H) or 1000 (char. K, M)	E, H, K, M	B, C, W	E	S, T	P, R		DAL,MSI,SOA
M55342^09@165#&	165,000	500 (char. E, H) or 1000 (char. K, M)	E, H, K, M	B, C, W	E	S, T	P, R		DAL,MSI,SOA
M55342^09@169#&	169,000	500 (char. E, H) or 1000 (char. K, M)	E, H, K, M	B, C, W	E	S, T	P, R		DAL,MSI,SOA
M55342^09@174#&	174,000	500 (char. E, H) or 1000 (char. K, M)	E, H, K, M	B, C, W	E	S, T	P, R		DAL,MSI,SOA
M55342^09@178#&	178,000	500 (char. E, H) or 1000 (char. K, M)	E, H, K, M	B, C, W	E	S, T	P, R		DAL,MSI,SOA
	Resistance	Power	Char.	Term.	Res. Tol./	Level 1	Level 2		
Part Number	Value (Ohms)	Rating (mW)	(^)	Type (@)	Multiplier (#)	FRL (&)	FRL (&)		Manufacturer
M55342^09@180#&	180,000	500 (char. E, H) or 1000 (char. K, M)	E, H, K, M	B, C, W	H, K, N	S, T	P, R		DAL,MSI,SOA
M55342^09@182#&	182,000	500 (char. E, H) or 1000 (char. K, M)	E, H, K, M	B, C, W	E	S, T	P, R		DAL,MSI,SOA
M55342^09@187#&	187,000	500 (char. E, H) or 1000 (char. K, M)	E, H, K, M	B, C, W	E	S, T	P, R		DAL,MSI,SOA
M55342^09@191#&	191,000	500 (char. E, H) or 1000 (char. K, M)	E, H, K, M	B, C, W	E	S, T	P, R		DAL,MSI,SOA
M55342^09@196#&	196,000	500 (char. E, H) or 1000 (char. K, M)	E, H, K, M	B, C, W	E	S, T	P, R		DAL,MSI,SOA
M55342^09@200#&	200,000	500 (char. E, H) or 1000 (char. K, M)	E, H, K, M	B, C, W	E, H, K, N	S, T	P, R		DAL,MSI,SOA
M55342^09@205#&	205,000	500 (char. E, H) or 1000 (char. K, M)	E, H, K, M	B, C, W	E	S, T	P, R		DAL,MSI,SOA
M55342^09@210#&	210,000	500 (char. E, H) or 1000 (char. K, M)	E, H, K, M	B, C, W	E	S, T	P, R		DAL,MSI,SOA
M55342^09@215#&	215,000	500 (char. E, H) or 1000 (char. K, M)	E, H, K, M	B, C, W	E	S, T	P, R		DAL,MSI,SOA
	Resistance	Power	Char.	Term.	Res. Tol./	Level 1	Level 2		
Part Number	Value (Ohms)	Rating (mW)	(^)	Type (@)	Multiplier (#)	FRL (&)	FRL (&)		Manufacturer
M55342^09@220#&	220,000	500 (char. E, H) or 1000 (char. K, M)	E, H, K, M	B, C, W	H, K, N	S, T	P, R		DAL,MSI,SOA
M55342^09@221#&	221,000	500 (char. E, H) or 1000 (char. K, M)	E, H, K, M	B, C, W	E	S, T	P, R		DAL,MSI,SOA
M55342^09@226#&	226,000	500 (char. E, H) or 1000 (char. K, M)	E, H, K, M	B, C, W	E	S, T	P, R		DAL,MSI,SOA
M55342^09@232#&	232,000	500 (char. E, H) or 1000 (char. K, M)	E, H, K, M	B, C, W	E	S, T	P, R		DAL,MSI,SOA
M55342^09@237#&	237,000	500 (char. E, H) or 1000 (char. K, M)	E, H, K, M	B, C, W	E	S, T	P, R		DAL,MSI,SOA
M55342^09@240#&	240,000	500 (char. E, H) or 1000 (char. K, M)	E, H, K, M	B, C, W	H, K	S, T	P, R		DAL,MSI,SOA
M55342^09@243#&	243,000	500 (char. E, H) or 1000 (char. K, M)	E, H, K, M	B, C, W	E	S, T	P, R		DAL,MSI,SOA
M55342^09@249#&	249,000	500 (char. E, H) or 1000 (char. K, M)	E, H, K, M	B, C, W	E	S, T	P, R		DAL,MSI,SOA
M55342^09@255#&	255,000	500 (char. E, H) or 1000 (char. K, M)	E, H, K, M	B, C, W	E	S, T	P, R		DAL,MSI,SOA
	Resistance	Power	Char.	Term.	Res. Tol./	Level 1	Level 2		
Part Number	Value (Ohms)	Rating (mW)	(^)	Type (@)	Multiplier (#)	FRL (&)	FRL (&)		Manufacturer
M55342^09@261#&	261,000	500 (char. E, H) or 1000 (char. K, M)	E, H, K, M	B, C, W	E	S, T	P, R		DAL,MSI,SOA
M55342^09@267#&	267,000	500 (char. E, H) or 1000 (char. K, M)	E, H, K, M	B, C, W	E	S, T	P, R		DAL,MSI,SOA
M55342^09@270#&	270,000	500 (char. E, H) or 1000 (char. K, M)	E, H, K, M	B, C, W	H, K, N	S, T	P, R		DAL,MSI,SOA
M55342^09@274#&	274,000	500 (char. E, H) or 1000 (char. K, M)	E, H, K, M	B, C, W	E	S, T	P, R		DAL,MSI,SOA
M55342^09@280#&	280,000	500 (char. E, H) or 1000 (char. K, M)	E, H, K, M	B, C, W	E	S, T	P, R		DAL,MSI,SOA
M55342^09@287#&	287,000	500 (char. E, H) or 1000 (char. K, M)	E, H, K, M	B, C, W	E	S, T	P, R		DAL,MSI,SOA
M55342^09@294#&	294,000	500 (char. E, H) or 1000 (char. K, M)	E, H, K, M	B, C, W	E	S, T	P, R		DAL,MSI,SOA
M55342^09@300#&	300,000	500 (char. E, H) or 1000 (char. K, M)	E, H, K, M	B, C, W	H, K	S, T	P, R		DAL,MSI,SOA
M55342^09@301#&	301,000	500 (char. E, H) or 1000 (char. K, M)	E, H, K, M	B, C, W	E	S, T	P, R		DAL,MSI,SOA
	Resistance	Power	Char.	Term.	Res. Tol./	Level 1	Level 2		
Part Number	Value (Ohms)	Rating (mW)	(^)	Type (@)	Multiplier (#)	FRL (&)	FRL (&)		Manufacturer

M55342^09@309#&	309,000	500 (char. E, H) or 1000 (char. K, M)	E, H, K, M	B, C, W	E	S, T	P, R		DAL,MSI,SOA
M55342^09@316#&	316,000	500 (char. E, H) or 1000 (char. K, M)	E, H, K, M	B, C, W	E	S, T	P, R		DAL,MSI,SOA
M55342^09@324#&	324,000	500 (char. E, H) or 1000 (char. K, M)	E, H, K, M	B, C, W	E	S, T	P, R		DAL,MSI,SOA
M55342^09@330#&	330,000	500 (char. E, H) or 1000 (char. K, M)	E, H, K, M	B, C, W	H, K, N	S, T	P, R		DAL,MSI,SOA
M55342^09@332#&	332,000	500 (char. E, H) or 1000 (char. K, M)	E, H, K, M	B, C, W	E	S, T	P, R		DAL,MSI,SOA
M55342^09@340#&	340,000	500 (char. E, H) or 1000 (char. K, M)	E, H, K, M	B, C, W	E	S, T	P, R		DAL,MSI,SOA
M55342^09@348#&	348,000	500 (char. E, H) or 1000 (char. K, M)	E, H, K, M	B, C, W	E	S, T	P, R		DAL,MSI,SOA
M55342^09@357#&	357,000	500 (char. E, H) or 1000 (char. K, M)	E, H, K, M	B, C, W	E	S, T	P, R		DAL,MSI,SOA
M55342^09@360#&	360,000	500 (char. E, H) or 1000 (char. K, M)	E, H, K, M	B, C, W	H, K	S, T	P, R		DAL,MSI,SOA
	Resistance	Power	Char.	Term.	Res. Tol./	Level 1	Level 2		
Part Number	Value (Ohms)	Rating (mW)	(^)	Type (@)	Multiplier (#)	FRL (&)	FRL (&)		Manufacturer
M55342^09@365#&	365,000	500 (char. E, H) or 1000 (char. K, M)	E, H, K, M	B, C, W	E	S, T	P, R		DAL,MSI,SOA
M55342^09@374#&	374,000	500 (char. E, H) or 1000 (char. K, M)	E, H, K, M	B, C, W	E	S, T	P, R		DAL,MSI,SOA
M55342^09@383#&	383,000	500 (char. E, H) or 1000 (char. K, M)	E, H, K, M	B, C, W	E	S, T	P, R		DAL,MSI,SOA
M55342^09@390#&	390,000	500 (char. E, H) or 1000 (char. K, M)	E, H, K, M	B, C, W	H, K, N	S, T	P, R		DAL,MSI,SOA
M55342^09@392#&	392,000	500 (char. E, H) or 1000 (char. K, M)	E, H, K, M	B, C, W	E	S, T	P, R		DAL,MSI,SOA
M55342^09@402#&	402,000	500 (char. E, H) or 1000 (char. K, M)	E, H, K, M	B, C, W	E	S, T	P, R		DAL,MSI,SOA
M55342^09@412#&	412,000	500 (char. E, H) or 1000 (char. K, M)	E, H, K, M	B, C, W	E	S, T	P, R		DAL,MSI,SOA
M55342^09@422#&	422,000	500 (char. E, H) or 1000 (char. K, M)	E, H, K, M	B, C, W	E	S, T	P, R		DAL,MSI,SOA
M55342^09@430#&	430,000	500 (char. E, H) or 1000 (char. K, M)	E, H, K, M	B, C, W	H, K	S, T	P, R		DAL,MSI,SOA
	Resistance	Power	Char.	Term.	Res. Tol./	Level 1	Level 2		
Part Number	Value (Ohms)	Rating (mW)	(^)	Type (@)	Multiplier (#)	FRL (&)	FRL (&)		Manufacturer
M55342^09@432#&	432,000	500 (char. E, H) or 1000 (char. K, M)	E, H, K, M	B, C, W	E	S, T	P, R		DAL,MSI,SOA
M55342^09@442#&	442,000	500 (char. E, H) or 1000 (char. K, M)	E, H, K, M	B, C, W	E	S, T	P, R		DAL,MSI,SOA
M55342^09@453#&	453,000	500 (char. E, H) or 1000 (char. K, M)	E, H, K, M	B, C, W	E	S, T	P, R		DAL,MSI,SOA
M55342^09@464#&	464,000	500 (char. E, H) or 1000 (char. K, M)	E, H, K, M	B, C, W	E	S, T	P, R		DAL,MSI,SOA
M55342^09@470#&	470,000	500 (char. E, H) or 1000 (char. K, M)	E, H, K, M	B, C, W	H, K, N	S, T	P, R		DAL,MSI,SOA
M55342^09@475#&	475,000	500 (char. E, H) or 1000 (char. K, M)	E, H, K, M	B, C, W	E	S, T	P, R		DAL,MSI,SOA
M55342^09@487#&	487,000	500 (char. E, H) or 1000 (char. K, M)	E, H, K, M	B, C, W	E	S, T	P, R		DAL,MSI,SOA
M55342^09@499#&	499,000	500 (char. E, H) or 1000 (char. K, M)	E, H, K, M	B, C, W	E	S, T	P, R		DAL,MSI,SOA
M55342^09@510#&	510,000	500 (char. E, H) or 1000 (char. K, M)	E, H, K, M	B, C, W	H, K	S, T	P, R		DAL,MSI,SOA
	Resistance	Power	Char.	Term.	Res. Tol./	Level 1	Level 2		
Part Number	Value (Ohms)	Rating (mW)	(^)	Type (@)	Multiplier (#)	FRL (&)	FRL (&)		Manufacturer
M55342^09@511#&	511,000	500 (char. E, H) or 1000 (char. K, M)	E, H, K, M	B, C, W	E	S, T	P, R		DAL,MSI,SOA
M55342^09@523#&	523,000	500 (char. E, H) or 1000 (char. K, M)	E, H, K, M	B, C, W	E	S, T	P, R		DAL,MSI,SOA
M55342^09@536#&	536,000	500 (char. E, H) or 1000 (char. K, M)	E, H, K, M	B, C, W	E	S, T	P, R		DAL,MSI,SOA
M55342^09@549#&	549,000	500 (char. E, H) or 1000 (char. K, M)	E, H, K, M	B, C, W	E	S, T	P, R		DAL,MSI,SOA
M55342^09@560#&	560,000	500 (char. E, H) or 1000 (char. K, M)	E, H, K, M	B, C, W	H, K, N	S, T	P, R		DAL,MSI,SOA
M55342^09@562#&	562,000	500 (char. E, H) or 1000 (char. K, M)	E, H, K, M	B, C, W	E	S, T	P, R		DAL,MSI,SOA
M55342^09@576#&	576,000	500 (char. E, H) or 1000 (char. K, M)	E, H, K, M	B, C, W	E	S, T	P, R		DAL,MSI,SOA
M55342^09@590#&	590,000	500 (char. E, H) or 1000 (char. K, M)	E, H, K, M	B, C, W	E	S, T	P, R		DAL,MSI,SOA
M55342^09@604#&	604,000	500 (char. E, H) or 1000 (char. K, M)	E, H, K, M	B, C, W	E	S, T	P, R		DAL,MSI,SOA
	Resistance	Power	Char.	Term.	Res. Tol./	Level 1	Level 2		
Part Number	Value (Ohms)	Rating (mW)	(^)	Type (@)	Multiplier (#)	FRL (&)	FRL (&)		Manufacturer
M55342^09@619#&	619,000	500 (char. E, H) or 1000 (char. K, M)	E, H, K, M	B, C, W	E	S, T	P, R		DAL,MSI,SOA
M55342^09@620#&	620,000	500 (char. E, H) or 1000 (char. K, M)	E, H, K, M	B, C, W	H, K	S, T	P, R		DAL,MSI,SOA
M55342^09@634#&	634,000	500 (char. E, H) or 1000 (char. K, M)	E, H, K, M	B, C, W	E	S, T	P, R		DAL,MSI,SOA

M55342^09@649#&	649,000	500 (char. E, H) or 1000 (char. K, M)	E, H, K, M	B, C, W	E	S, T	P, R		DAL,MSI,SOA
M55342^09@665#&	665,000	500 (char. E, H) or 1000 (char. K, M)	E, H, K, M	B, C, W	E	S, T	P, R		DAL,MSI,SOA
M55342^09@680#&	680,000	500 (char. E, H) or 1000 (char. K, M)	E, H, K, M	B, C, W	H, K, N	S, T	P, R		DAL,MSI,SOA
M55342^09@681#&	681,000	500 (char. E, H) or 1000 (char. K, M)	E, H, K, M	B, C, W	E	S, T	P, R		DAL,MSI,SOA
M55342^09@698#&	698,000	500 (char. E, H) or 1000 (char. K, M)	E, H, K, M	B, C, W	E	S, T	P, R		DAL,MSI,SOA
M55342^09@715#&	715,000	500 (char. E, H) or 1000 (char. K, M)	E, H, K, M	B, C, W	E	S, T	P, R		DAL,MSI,SOA
	Resistance	Power	Char.	Term.	Res. Tol./	Level 1	Level 2		
Part Number	Value (Ohms)	Rating (mW)	(^)	Type (@)	Multiplier (#)	FRL (&)	FRL (&)		Manufacturer
M55342^09@732#&	732,000	500 (char. E, H) or 1000 (char. K, M)	E, H, K, M	B, C, W	E	S, T	P, R		DAL,MSI,SOA
M55342^09@750#&	750,000	500 (char. E, H) or 1000 (char. K, M)	E, H, K, M	B, C, W	E, H, K	S, T	P, R		DAL,MSI,SOA
M55342^09@768#&	768,000	500 (char. E, H) or 1000 (char. K, M)	E, H, K, M	B, C, W	E	S, T	P, R		DAL,MSI,SOA
M55342^09@787#&	787,000	500 (char. E, H) or 1000 (char. K, M)	E, H, K, M	B, C, W	E	S, T	P, R		DAL,MSI,SOA
M55342^09@806#&	806,000	500 (char. E, H) or 1000 (char. K, M)	E, H, K, M	B, C, W	E	S, T	P, R		DAL,MSI,SOA
M55342^09@820#&	820,000	500 (char. E, H) or 1000 (char. K, M)	E, H, K, M	B, C, W	H, K, N	S, T	P, R		DAL,MSI,SOA
M55342^09@825#&	825,000	500 (char. E, H) or 1000 (char. K, M)	E, H, K, M	B, C, W	E	S, T	P, R		DAL,MSI,SOA
M55342^09@845#&	845,000	500 (char. E, H) or 1000 (char. K, M)	E, H, K, M	B, C, W	E	S, T	P, R		DAL,MSI,SOA
M55342^09@866#&	866,000	500 (char. E, H) or 1000 (char. K, M)	E, H, K, M	B, C, W	E	S, T	P, R		DAL,MSI,SOA
	Resistance	Power	Char.	Term.	Res. Tol./	Level 1	Level 2		
Part Number	Value (Ohms)	Rating (mW)	(^)	Type (@)	Multiplier (#)	FRL (&)	FRL (&)		Manufacturer
M55342^09@887#&	887,000	500 (char. E, H) or 1000 (char. K, M)	E, H, K, M	B, C, W	E	S, T	P, R		DAL,MSI,SOA
M55342^09@909#&	909,000	500 (char. E, H) or 1000 (char. K, M)	E, H, K, M	B, C, W	E	S, T	P, R		DAL,MSI,SOA
M55342^09@910#&	910,000	500 (char. E, H) or 1000 (char. K, M)	E, H, K, M	B, C, W	H, K	S, T	P, R		DAL,MSI,SOA
M55342^09@931#&	931,000	500 (char. E, H) or 1000 (char. K, M)	E, H, K, M	B, C, W	E	S, T	P, R		DAL,MSI,SOA
M55342^09@953#&	953,000	500 (char. E, H) or 1000 (char. K, M)	E, H, K, M	B, C, W	E	S, T	P, R		DAL,MSI,SOA
M55342^09@976#&	976,000	500 (char. E, H) or 1000 (char. K, M)	E, H, K, M	B, C, W	E	S, T	P, R		DAL,MSI,SOA
	Resistance	Power	Char.	Term.	Res. Tol./	Level 1	Level 2		
Part Number	Value (Ohms)	Rating (mW)	(^)	Type (@)	Multiplier (#)	FRL (&)	FRL (&)		Manufacturer

MIL-PRF-55342/9 (RM2512) Film Chip Resistors: 1,000,000 Ohms Through 9,760,000 Ohms

	Resistance	Power	Char.	Term.	Res. Tol./	Level 1	Level 2	
Part Number	Value (Ohms)	Rating (mW)	(^)	Type (@)	Multiplier (#)	FRL (&)	FRL (&)	Manufacturer
M55342^09@1#00&	1,000,000	500 (char. E, H) or 1000 (char. K, M)	E, H, K, M	B, C, W	F, T, L, P	S, T	P, R	DAL,MSI,SOA
M55342^09@1#02&	1,020,000	500 (char. E, H) or 1000 (char. K, M)	E, H, K, M	B, C, W	F	S, T	P, R	DAL,MSI,SOA
M55342^09@1#05&	1,050,000	500 (char. E, H) or 1000 (char. K, M)	E, H, K, M	B, C, W	F	S, T	P, R	DAL,MSI,SOA
M55342^09@1#07&	1,070,000	500 (char. E, H) or 1000 (char. K, M)	E, H, K, M	B, C, W	F	S, T	P, R	DAL,MSI,SOA
M55342^09@1#10&	1,100,000	500 (char. E, H) or 1000 (char. K, M)	E, H, K, M	B, C, W	F, T, L	S, T	P, R	DAL,MSI,SOA
M55342^09@1#13&	1,130,000	500 (char. E, H) or 1000 (char. K, M)	E, H, K, M	B, C, W	F	S, T	P, R	DAL,MSI,SOA
M55342^09@1#15&	1,150,000	500 (char. E, H) or 1000 (char. K, M)	E, H, K, M	B, C, W	F	S, T	P, R	DAL,MSI,SOA
M55342^09@1#18&	1,180,000	500 (char. E, H) or 1000 (char. K, M)	E, H, K, M	B, C, W	F	S, T	P, R	DAL,MSI,SOA
M55342^09@1#20&	1,200,000	500 (char. E, H) or 1000 (char. K, M)	E, H, K, M	B, C, W	T, L, P	S, T	P, R	DAL,MSI,SOA
	Resistance	Power	Char.	Term.	Res. Tol./	Level 1	Level 2	
Part Number	Value (Ohms)	Rating (mW)	(^)	Type (@)	Multiplier (#)	FRL (&)	FRL (&)	Manufacturer
M55342^09@1#21&	1,210,000	500 (char. E, H) or 1000 (char. K, M)	E, H, K, M	B, C, W	F	S, T	P, R	DAL,MSI,SOA
M55342^09@1#24&	1,240,000	500 (char. E, H) or 1000 (char. K, M)	E, H, K, M	B, C, W	F	S, T	P, R	DAL,MSI,SOA

M55342^09@1#27&	1,270,000	500 (char. E, H) or 1000 (char. K, M)	E, H, K, M	B, C, W	F	S, T	P, R	DAL,MSI,SOA
M55342^09@1#30&	1,300,000	500 (char. E, H) or 1000 (char. K, M)	E, H, K, M	B, C, W	F, T, L	S, T	P, R	DAL,MSI,SOA
M55342^09@1#33&	1,330,000	500 (char. E, H) or 1000 (char. K, M)	E, H, K, M	B, C, W	F	S, T	P, R	DAL,MSI,SOA
M55342^09@1#37&	1,370,000	500 (char. E, H) or 1000 (char. K, M)	E, H, K, M	B, C, W	F	S, T	P, R	DAL,MSI,SOA
M55342^09@1#40&	1,400,000	500 (char. E, H) or 1000 (char. K, M)	E, H, K, M	B, C, W	F	S, T	P, R	DAL,MSI,SOA
M55342^09@1#43&	1,430,000	500 (char. E, H) or 1000 (char. K, M)	E, H, K, M	B, C, W	F	S, T	P, R	DAL,MSI,SOA
M55342^09@1#47&	1,470,000	500 (char. E, H) or 1000 (char. K, M)	E, H, K, M	B, C, W	F	S, T	P, R	DAL,MSI,SOA
	Resistance	Power	Char.	Term.	Res. Tol./	Level 1	Level 2	
Part Number	Value (Ohms)	Rating (mW)	(^)	Type (@)	Multiplier (#)	FRL (&)	FRL (&)	Manufacturer
M55342^09@1#50&	1,500,000	500 (char. E, H) or 1000 (char. K, M)	E, H, K, M	B, C, W	F, T, L, P	S, T	P, R	DAL,MSI,SOA
M55342^09@1#54&	1,540,000	500 (char. E, H) or 1000 (char. K, M)	E, H, K, M	B, C, W	F	S, T	P, R	DAL,MSI,SOA
M55342^09@1#58&	1,580,000	500 (char. E, H) or 1000 (char. K, M)	E, H, K, M	B, C, W	F	S, T	P, R	DAL,MSI,SOA
M55342^09@1#60&	1,600,000	500 (char. E, H) or 1000 (char. K, M)	E, H, K, M	B, C, W	T, L	S, T	P, R	DAL,MSI,SOA
M55342^09@1#62&	1,620,000	500 (char. E, H) or 1000 (char. K, M)	E, H, K, M	B, C, W	F	S, T	P, R	DAL,MSI,SOA
M55342^09@1#65&	1,650,000	500 (char. E, H) or 1000 (char. K, M)	E, H, K, M	B, C, W	F	S, T	P, R	DAL,MSI,SOA
M55342^09@1#69&	1,690,000	500 (char. E, H) or 1000 (char. K, M)	E, H, K, M	B, C, W	F	S, T	P, R	DAL,MSI,SOA
M55342^09@1#74&	1,740,000	500 (char. E, H) or 1000 (char. K, M)	E, H, K, M	B, C, W	F	S, T	P, R	DAL,MSI,SOA
M55342^09@1#78&	1,780,000	500 (char. E, H) or 1000 (char. K, M)	E, H, K, M	B, C, W	F	S, T	P, R	DAL,MSI,SOA
	Resistance	Power	Char.	Term.	Res. Tol./	Level 1	Level 2	
Part Number	Value (Ohms)	Rating (mW)	(^)	Type (@)	Multiplier (#)	FRL (&)	FRL (&)	Manufacturer
M55342^09@1#80&	1,800,000	500 (char. E, H) or 1000 (char. K, M)	E, H, K, M	B, C, W	T, L, P	S, T	P, R	DAL,MSI,SOA
M55342^09@1#82&	1,820,000	500 (char. E, H) or 1000 (char. K, M)	E, H, K, M	B, C, W	F	S, T	P, R	DAL,MSI,SOA
M55342^09@1#87&	1,870,000	500 (char. E, H) or 1000 (char. K, M)	E, H, K, M	B, C, W	F	S, T	P, R	DAL,MSI,SOA
M55342^09@1#91&	1,910,000	500 (char. E, H) or 1000 (char. K, M)	E, H, K, M	B, C, W	F	S, T	P, R	DAL,MSI,SOA
M55342^09@1#96&	1,960,000	500 (char. E, H) or 1000 (char. K, M)	E, H, K, M	B, C, W	F	S, T	P, R	DAL,MSI,SOA
M55342^09@2#00&	2,000,000	500 (char. E, H) or 1000 (char. K, M)	E, H, K, M	B, C, W	F, T, L, P	S, T	P, R	DAL,MSI,SOA
M55342^09@2#05&	2,050,000	500 (char. E, H) or 1000 (char. K, M)	E, H, K, M	B, C, W	F	S, T	P, R	DAL,MSI,SOA
M55342^09@2#10&	2,100,000	500 (char. E, H) or 1000 (char. K, M)	E, H, K, M	B, C, W	F	S, T	P, R	DAL,MSI,SOA
M55342^09@2#15&	2,150,000	500 (char. E, H) or 1000 (char. K, M)	E, H, K, M	B, C, W	F	S, T	P, R	DAL,MSI,SOA
	Resistance	Power	Char.	Term.	Res. Tol./	Level 1	Level 2	
Part Number	Value (Ohms)	Rating (mW)	(^)	Type (@)	Multiplier (#)	FRL (&)	FRL (&)	Manufacturer
M55342^09@2#20&	2,200,000	500 (char. E, H) or 1000 (char. K, M)	E, H, K, M	B, C, W	T, L, P	S, T	P, R	DAL,MSI,SOA
M55342^09@2#21&	2,210,000	500 (char. E, H) or 1000 (char. K, M)	E, H, K, M	B, C, W	F	S, T	P, R	DAL,MSI,SOA
M55342^09@2#26&	2,260,000	500 (char. E, H) or 1000 (char. K, M)	E, H, K, M	B, C, W	F	S, T	P, R	DAL,MSI,SOA
M55342^09@2#32&	2,320,000	500 (char. E, H) or 1000 (char. K, M)	E, H, K, M	B, C, W	F	S, T	P, R	DAL,MSI,SOA
M55342^09@2#37&	2,370,000	500 (char. E, H) or 1000 (char. K, M)	E, H, K, M	B, C, W	F	S, T	P, R	DAL,MSI,SOA
M55342^09@2#40&	2,400,000	500 (char. E, H) or 1000 (char. K, M)	E, H, K, M	B, C, W	T, L	S, T	P, R	DAL,MSI,SOA
M55342^09@2#43&	2,430,000	500 (char. E, H) or 1000 (char. K, M)	E, H, K, M	B, C, W	F	S, T	P, R	DAL,MSI,SOA
M55342^09@2#49&	2,490,000	500 (char. E, H) or 1000 (char. K, M)	E, H, K, M	B, C, W	F	S, T	P, R	DAL,MSI,SOA
M55342^09@2#55&	2,550,000	500 (char. E, H) or 1000 (char. K, M)	E, H, K, M	B, C, W	F	S, T	P, R	DAL,MSI,SOA
	Resistance	Power	Char.	Term.	Res. Tol./	Level 1	Level 2	
Part Number	Value (Ohms)	Rating (mW)	(^)	Type (@)	Multiplier (#)	FRL (&)	FRL (&)	Manufacturer
M55342^09@2#61&	2,610,000	500 (char. E, H) or 1000 (char. K, M)	E, H, K, M	B, C, W	F	S, T	P, R	DAL,MSI,SOA
M55342^09@2#67&	2,670,000	500 (char. E, H) or 1000 (char. K, M)	E, H, K, M	B, C, W	F	S, T	P, R	DAL,MSI,SOA
M55342^09@2#70&	2,700,000	500 (char. E, H) or 1000 (char. K, M)	E, H, K, M	B, C, W	T, L, P	S, T	P, R	DAL,MSI,SOA
M55342^09@2#74&	2,740,000	500 (char. E, H) or 1000 (char. K, M)	E, H, K, M	B, C, W	F	S, T	P, R	DAL,MSI,SOA
M55342^09@2#80&	2,800,000	500 (char. E, H) or 1000 (char. K, M)	E, H, K, M	B, C, W	F	S, T	P, R	DAL,MSI,SOA

M55342^09@2#87&	2,870,000	500 (char. E, H) or 1000 (char. K, M)	E, H, K, M	B, C, W	F	S, T	P, R	DAL,MSI,SOA
M55342^09@2#94&	2,940,000	500 (char. E, H) or 1000 (char. K, M)	E, H, K, M	B, C, W	F	S, T	P, R	DAL,MSI,SOA
M55342^09@3#00&	3,000,000	500 (char. E, H) or 1000 (char. K, M)	E, H, K, M	B, C, W	T, L	S, T	P, R	DAL,MSI,SOA
M55342^09@3#01&	3,010,000	500 (char. E, H) or 1000 (char. K, M)	E, H, K, M	B, C, W	F	S, T	P, R	DAL,MSI,SOA
	Resistance	Power	Char.	Term.	Res. Tol./	Level 1	Level 2	
Part Number	Value (Ohms)	Rating (mW)	(^)	Type (@)	Multiplier (#)	FRL (&)	FRL (&)	Manufacturer
M55342^09@3#09&	3,090,000	500 (char. E, H) or 1000 (char. K, M)	E, H, K, M	B, C, W	F	S, T	P, R	DAL,MSI,SOA
M55342^09@3#16&	3,160,000	500 (char. E, H) or 1000 (char. K, M)	E, H, K, M	B, C, W	F	S, T	P, R	DAL,MSI,SOA
M55342^09@3#24&	3,240,000	500 (char. E, H) or 1000 (char. K, M)	E, H, K, M	B, C, W	F	S, T	P, R	DAL,MSI,SOA
M55342^09@3#30&	3,300,000	500 (char. E, H) or 1000 (char. K, M)	E, H, K, M	B, C, W	T, L, P	S, T	P, R	DAL,MSI,SOA
M55342^09@3#32&	3,320,000	500 (char. E, H) or 1000 (char. K, M)	E, H, K, M	B, C, W	F	S, T	P, R	DAL,MSI,SOA
M55342^09@3#40&	3,400,000	500 (char. E, H) or 1000 (char. K, M)	E, H, K, M	B, C, W	F	S, T	P, R	DAL,MSI,SOA
M55342^09@3#48&	3,480,000	500 (char. E, H) or 1000 (char. K, M)	E, H, K, M	B, C, W	F	S, T	P, R	DAL,MSI,SOA
M55342^09@3#57&	3,570,000	500 (char. E, H) or 1000 (char. K, M)	E, H, K, M	B, C, W	F	S, T	P, R	DAL,MSI,SOA
M55342^09@3#60&	3,600,000	500 (char. E, H) or 1000 (char. K, M)	E, H, K, M	B, C, W	T, L	S, T	P, R	DAL,MSI,SOA
	Resistance	Power	Char.	Term.	Res. Tol./	Level 1	Level 2	
Part Number	Value (Ohms)	Rating (mW)	(^)	Type (@)	Multiplier (#)	FRL (&)	FRL (&)	Manufacturer
M55342^09@3#65&	3,650,000	500 (char. E, H) or 1000 (char. K, M)	E, H, K, M	B, C, W	F	S, T	P, R	DAL,MSI,SOA
M55342^09@3#74&	3,740,000	500 (char. E, H) or 1000 (char. K, M)	E, H, K, M	B, C, W	F	S, T	P, R	DAL,MSI,SOA
M55342^09@3#83&	3,830,000	500 (char. E, H) or 1000 (char. K, M)	E, H, K, M	B, C, W	F	S, T	P, R	DAL,MSI,SOA
M55342^09@3#90&	3,900,000	500 (char. E, H) or 1000 (char. K, M)	E, H, K, M	B, C, W	T, L, P	S, T	P, R	DAL,MSI,SOA
M55342^09@3#92&	3,920,000	500 (char. E, H) or 1000 (char. K, M)	E, H, K, M	B, C, W	F	S, T	P, R	DAL,MSI,SOA
M55342^09@4#02&	4,020,000	500 (char. E, H) or 1000 (char. K, M)	E, H, K, M	B, C, W	F	S, T	P, R	DAL,MSI,SOA
M55342^09@4#12&	4,120,000	500 (char. E, H) or 1000 (char. K, M)	E, H, K, M	B, C, W	F	S, T	P, R	DAL,MSI,SOA
M55342^09@4#22&	4,220,000	500 (char. E, H) or 1000 (char. K, M)	E, H, K, M	B, C, W	F	S, T	P, R	DAL,MSI,SOA
M55342^09@4#30&	4,300,000	500 (char. E, H) or 1000 (char. K, M)	E, H, K, M	B, C, W	T, L	S, T	P, R	DAL,MSI,SOA
	Resistance	Power	Char.	Term.	Res. Tol./	Level 1	Level 2	
Part Number	Value (Ohms)	Rating (mW)	(^)	Type (@)	Multiplier (#)	FRL (&)	FRL (&)	Manufacturer
M55342^09@4#32&	4,320,000	500 (char. E, H) or 1000 (char. K, M)	E, H, K, M	B, C, W	F	S, T	P, R	DAL,MSI,SOA
M55342^09@4#42&	4,420,000	500 (char. E, H) or 1000 (char. K, M)	E, H, K, M	B, C, W	F	S, T	P, R	DAL,MSI,SOA
M55342^09@4#53&	4,530,000	500 (char. E, H) or 1000 (char. K, M)	E, H, K, M	B, C, W	F	S, T	P, R	DAL,MSI,SOA
M55342^09@4#64&	4,640,000	500 (char. E, H) or 1000 (char. K, M)	E, H, K, M	B, C, W	F	S, T	P, R	DAL,MSI,SOA
M55342^09@4#70&	4,700,000	500 (char. E, H) or 1000 (char. K, M)	E, H, K, M	B, C, W	T, L, P	S, T	P, R	DAL,MSI,SOA
M55342^09@4#75&	4,750,000	500 (char. E, H) or 1000 (char. K, M)	E, H, K, M	B, C, W	F	S, T	P, R	DAL,MSI,SOA
M55342^09@4#87&	4,870,000	500 (char. E, H) or 1000 (char. K, M)	E, H, K, M	B, C, W	F	S, T	P, R	DAL,MSI,SOA
M55342^09@4#99&	4,990,000	500 (char. E, H) or 1000 (char. K, M)	E, H, K, M	B, C, W	F	S, T	P, R	DAL,MSI,SOA
M55342^09@5#10&	5,100,000	500 (char. E, H) or 1000 (char. K, M)	E, H, K, M	B, C, W	T, L	S, T	P, R	DAL,MSI,SOA
	Resistance	Power	Char.	Term.	Res. Tol./	Level 1	Level 2	
Part Number	Value (Ohms)	Rating (mW)	(^)	Type (@)	Multiplier (#)	FRL (&)	FRL (&)	Manufacturer
M55342^09@5#11&	5,110,000	500 (char. E, H) or 1000 (char. K, M)	E, H, K, M	B, C, W	F	S, T	P, R	DAL,MSI,SOA
M55342^09@5#23&	5,230,000	500 (char. E, H) or 1000 (char. K, M)	E, H, K, M	B, C, W	F	S, T	P, R	DAL,MSI,SOA
M55342^09@5#36&	5,360,000	500 (char. E, H) or 1000 (char. K, M)	E, H, K, M	B, C, W	F	S, T	P, R	DAL,MSI,SOA
M55342^09@5#49&	5,490,000	500 (char. E, H) or 1000 (char. K, M)	E, H, K, M	B, C, W	F	S, T	P, R	DAL,MSI,SOA
M55342^09@5#60&	5,600,000	500 (char. E, H) or 1000 (char. K, M)	E, H, K, M	B, C, W	T, L, P	S, T	P, R	DAL,MSI,SOA
M55342^09@5#62&	5,620,000	500 (char. E, H) or 1000 (char. K, M)	E, H, K, M	B, C, W	F	S, T	P, R	DAL,MSI,SOA
M55342^09@5#76&	5,760,000	500 (char. E, H) or 1000 (char. K, M)	E, H, K, M	B, C, W	F	S, T	P, R	DAL,MSI,SOA
M55342^09@5#90&	5,900,000	500 (char. E, H) or 1000 (char. K, M)	E, H, K, M	B, C, W	F	S, T	P, R	DAL,MSI,SOA

M55342^09@6#04&	6,040,000	500 (char. E, H) or 1000 (char. K, M)	E, H, K, M	B, C, W	F	S, T	P, R	DAL,MSI,SOA
	Resistance	Power	Char.	Term.	Res. Tol./	Level 1	Level 2	
Part Number	Value (Ohms)	Rating (mW)	(^)	Type (@)	Multiplier (#)	FRL (&)	FRL (&)	Manufacturer
M55342^09@6#19&	6,190,000	500 (char. E, H) or 1000 (char. K, M)	E, H, K, M	B, C, W	F	S, T	P, R	DAL,MSI,SOA
M55342^09@6#20&	6,200,000	500 (char. E, H) or 1000 (char. K, M)	E, H, K, M	B, C, W	T, L	S, T	P, R	DAL,MSI,SOA
M55342^09@6#34&	6,340,000	500 (char. E, H) or 1000 (char. K, M)	E, H, K, M	B, C, W	F	S, T	P, R	DAL,MSI,SOA
M55342^09@6#49&	6,490,000	500 (char. E, H) or 1000 (char. K, M)	E, H, K, M	B, C, W	F	S, T	P, R	DAL,MSI,SOA
M55342^09@6#65&	6,650,000	500 (char. E, H) or 1000 (char. K, M)	E, H, K, M	B, C, W	F	S, T	P, R	DAL,MSI,SOA
M55342^09@6#80&	6,800,000	500 (char. E, H) or 1000 (char. K, M)	E, H, K, M	B, C, W	T, L, P	S, T	P, R	DAL,MSI,SOA
M55342^09@6#81&	6,810,000	500 (char. E, H) or 1000 (char. K, M)	E, H, K, M	B, C, W	F	S, T	P, R	DAL,MSI,SOA
M55342^09@6#98&	6,980,000	500 (char. E, H) or 1000 (char. K, M)	E, H, K, M	B, C, W	F	S, T	P, R	DAL,MSI,SOA
M55342^09@7#15&	7,150,000	500 (char. E, H) or 1000 (char. K, M)	E, H, K, M	B, C, W	F	S, T	P, R	DAL,MSI,SOA
	Resistance	Power	Char.	Term.	Res. Tol./	Level 1	Level 2	
Part Number	Value (Ohms)	Rating (mW)	(^)	Type (@)	Multiplier (#)	FRL (&)	FRL (&)	Manufacturer
M55342^09@7#32&	7,320,000	500 (char. E, H) or 1000 (char. K, M)	E, H, K, M	B, C, W	F	S, T	P, R	DAL,MSI,SOA
M55342^09@7#50&	7,500,000	500 (char. E, H) or 1000 (char. K, M)	E, H, K, M	B, C, W	F, T, L	S, T	P, R	DAL,MSI,SOA
M55342^09@7#68&	7,680,000	500 (char. E, H) or 1000 (char. K, M)	E, H, K, M	B, C, W	F	S, T	P, R	DAL,MSI,SOA
M55342^09@7#87&	7,870,000	500 (char. E, H) or 1000 (char. K, M)	E, H, K, M	B, C, W	F	S, T	P, R	DAL,MSI,SOA
M55342^09@8#06&	8,060,000	500 (char. E, H) or 1000 (char. K, M)	E, H, K, M	B, C, W	F	S, T	P, R	DAL,MSI,SOA
M55342^09@8#20&	8,200,000	500 (char. E, H) or 1000 (char. K, M)	E, H, K, M	B, C, W	T, L, P	S, T	P, R	DAL,MSI,SOA
M55342^09@8#25&	8,250,000	500 (char. E, H) or 1000 (char. K, M)	E, H, K, M	B, C, W	F	S, T	P, R	DAL,MSI,SOA
M55342^09@8#45&	8,450,000	500 (char. E, H) or 1000 (char. K, M)	E, H, K, M	B, C, W	F	S, T	P, R	DAL,MSI,SOA
M55342^09@8#66&	8,660,000	500 (char. E, H) or 1000 (char. K, M)	E, H, K, M	B, C, W	F	S, T	P, R	DAL,MSI,SOA
	Resistance	Power	Char.	Term.	Res. Tol./	Level 1	Level 2	
Part Number	Value (Ohms)	Rating (mW)	(^)	Type (@)	Multiplier (#)	FRL (&)	FRL (&)	Manufacturer
M55342^09@8#87&	8,870,000	500 (char. E, H) or 1000 (char. K, M)	E, H, K, M	B, C, W	F	S, T	P, R	DAL,MSI,SOA
M55342^09@9#09&	9,090,000	500 (char. E, H) or 1000 (char. K, M)	E, H, K, M	B, C, W	F	S, T	P, R	DAL,MSI,SOA
M55342^09@9#10&	9,100,000	500 (char. E, H) or 1000 (char. K, M)	E, H, K, M	B, C, W	T, L	S, T	P, R	DAL,MSI,SOA
M55342^09@9#31&	9,310,000	500 (char. E, H) or 1000 (char. K, M)	E, H, K, M	B, C, W	F	S, T	P, R	DAL,MSI,SOA
M55342^09@9#53&	9,530,000	500 (char. E, H) or 1000 (char. K, M)	E, H, K, M	B, C, W	F	S, T	P, R	DAL,MSI,SOA
M55342^09@9#76&	9,760,000	500 (char. E, H) or 1000 (char. K, M)	E, H, K, M	B, C, W	F	S, T	P, R	DAL,MSI,SOA
	Resistance	Power	Char.	Term.	Res. Tol./	Level 1	Level 2	
Part Number	Value (Ohms)	Rating (mW)	(^)	Type (@)	Multiplier (#)	FRL (&)	FRL (&)	Manufacturer

MIL-PRF-55342/9 (RM2512) Film Chip Resistors: 10,000,000 Ohms Through 15,000,000 Ohms

	Resistance	Power	Char.	Term.	Res. Tol./	Level 1	Level 2	
Part Number	Value (Ohms)	Rating (mW)	(^)	Type (@)	Multiplier (#)	FRL (&)	FRL (&)	Manufacturer
M55342^09@10#0&	10,000,000	500 (char. E, H) or 1000 (char. K, M)	E, H, K, M	B, C, W	F, T, L, P	S, T	P, R	DAL,MSI,SOA
M55342^09@10#2&	10,200,000	500 (char. E, H) or 1000 (char. K, M)	E, H, K, M	B, C, W	F	S, T	P, R	DAL,MSI,SOA
M55342^09@10#5&	10,500,000	500 (char. E, H) or 1000 (char. K, M)	E, H, K, M	B, C, W	F	S, T	P, R	DAL,MSI,SOA
M55342^09@10#7&	10,700,000	500 (char. E, H) or 1000 (char. K, M)	E, H, K, M	B, C, W	F	S, T	P, R	DAL,MSI,SOA
M55342^09@11#0&	11,000,000	500 (char. E, H) or 1000 (char. K, M)	E, H, K, M	B, C, W	F, T, L	S, T	P, R	DAL,MSI,SOA
M55342^09@11#3&	11,300,000	500 (char. E, H) or 1000 (char. K, M)	E, H, K, M	B, C, W	F	S, T	P, R	DAL,MSI,SOA
M55342^09@11#5&	11,500,000	500 (char. E, H) or 1000 (char. K, M)	E, H, K, M	B, C, W	F	S, T	P, R	DAL,MSI,SOA

M55342^09@11#8&	11,800,000	500 (char. E, H) or 1000 (char. K, M)	E, H, K, M	B, C, W	F	S, T	P, R	DAL,MSI,SOA
M55342^09@12#0&	12,000,000	500 (char. E, H) or 1000 (char. K, M)	E, H, K, M	B, C, W	T, L, P	S, T	P, R	DAL,MSI,SOA
	Resistance	Power	Char.	Term.	Res. Tol./	Level 1	Level 2	
Part Number	Value (Ohms)	Rating (mW)	(^)	Type (@)	Multiplier (#)	FRL (&)	FRL (&)	Manufacturer
M55342^09@12#1&	12,100,000	500 (char. E, H) or 1000 (char. K, M)	E, H, K, M	B, C, W	F	S, T	P, R	DAL,MSI,SOA
M55342^09@12#4&	12,400,000	500 (char. E, H) or 1000 (char. K, M)	E, H, K, M	B, C, W	F	S, T	P, R	DAL,MSI,SOA
M55342^09@12#7&	12,700,000	500 (char. E, H) or 1000 (char. K, M)	E, H, K, M	B, C, W	F	S, T	P, R	DAL,MSI,SOA
M55342^09@13#0&	13,000,000	500 (char. E, H) or 1000 (char. K, M)	E, H, K, M	B, C, W	F, T, L	S, T	P, R	DAL,MSI,SOA
M55342^09@13#3&	13,300,000	500 (char. E, H) or 1000 (char. K, M)	E, H, K, M	B, C, W	F	S, T	P, R	DAL,MSI,SOA
M55342^09@13#7&	13,700,000	500 (char. E, H) or 1000 (char. K, M)	E, H, K, M	B, C, W	F	S, T	P, R	DAL,MSI,SOA
M55342^09@14#0&	14,000,000	500 (char. E, H) or 1000 (char. K, M)	E, H, K, M	B, C, W	F	S, T	P, R	DAL,MSI,SOA
M55342^09@14#3&	14,300,000	500 (char. E, H) or 1000 (char. K, M)	E, H, K, M	B, C, W	F	S, T	P, R	DAL,MSI,SOA
M55342^09@14#7&	14,700,000	500 (char. E, H) or 1000 (char. K, M)	E, H, K, M	B, C, W	F	S, T	P, R	DAL,MSI,SOA
M55342^09@15#0&	15,000,000	500 (char. E, H) or 1000 (char. K, M)	E, H, K, M	B, C, W	F, T, L, P	S, T	P, R	DAL,MSI,SOA
	Resistance	Power	Char.	Term.	Res. Tol./	Level 1	Level 2	
Part Number	Value (Ohms)	Rating (mW)	(^)	Type (@)	Multiplier (#)	FRL (&)	FRL (&)	Manufacturer

Physical Dimensions Table

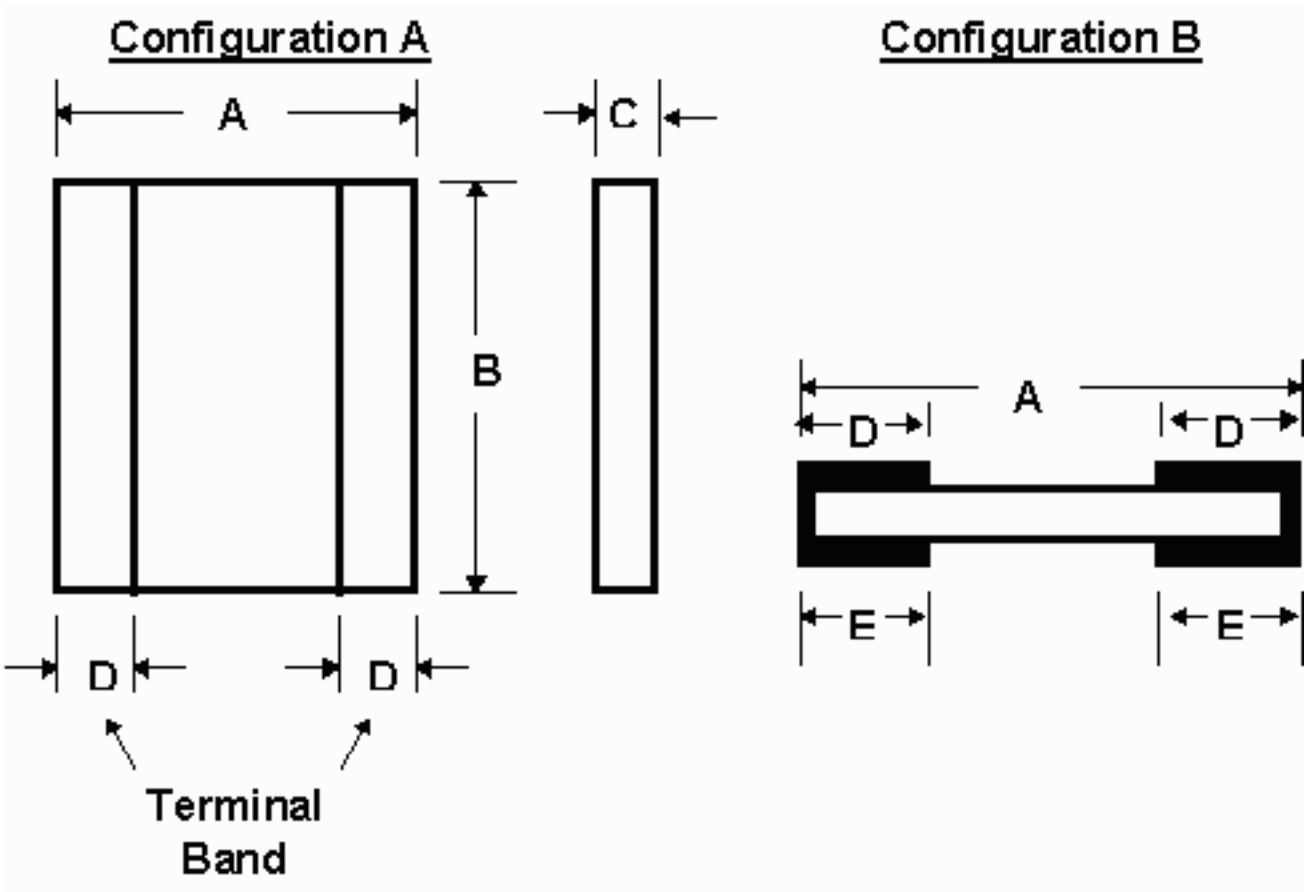

Resistor Style	Configuration	A	B	C	D	E
RM0505	A	0.050+/-0.005	0.050+/-0.005	0.010/0.030	0.010+/-0.005	N/A
RM0505	B	0.055+/-0.005	0.050+/-0.005	0.012/0.033	0.010+/-0.005	0.015+/-0.005
RM1005	A	0.100+/-0.005	0.050+/-0.005	0.012/0.030	0.015+/-0.005	N/A
RM1005	B	0.105+/-0.007	0.050+/-0.005	0.015/0.033	0.015+/-0.005	0.015+/-0.005
RM1505	A	0.150+/-0.005	0.050+/-0.005	0.012/0.030	0.015+/-0.005	N/A
RM1505	B	0.155+/-0.007	0.050+/-0.005	0.015/0.033	0.015+/-0.005	0.015+/-0.005
RM2208	A	0.225+/-0.005	0.075+/-0.005	0.012/0.030	0.015+/-0.005	N/A
RM2208	B	0.230+/-0.007	0.075+/-0.005	0.015/0.033	0.020+/-0.005	0.015+/-0.005
RM0705	A	0.075+/-0.005	0.050+/-0.005	0.012/0.030	0.015+/-0.005	N/A
RM0705	B	0.080+/-0.006	0.050+/-0.005	0.015/0.033	0.015+/-0.005	0.015+/-0.005
RM1206	A	0.126+/-0.005	0.063+/-0.005	0.012/0.030	0.020+0.005,-0.010	N/A
RM1206	B	0.126+/-0.008	0.063+/-0.005	0.015/0.033	0.020+0.005,-0.010	0.020+0.005,-0.010
RM2010	A	0.206+/-0.005	0.098+/-0.005	0.012/0.030	0.015+/-0.005	N/A
RM2010	B	0.209+/-0.009	0.098+/-0.005	0.015/0.033	0.020+/-0.005	0.020+/-0.005
RM2512	A	0.248+/-0.005	0.124+/-0.005	0.012/0.030	0.015+/-0.005	N/A
RM2512	B	0.259+/-0.006	0.124+/-0.005	0.015/0.033	0.015+/-0.005	0.020+/-0.005
RM1010	A	0.100+/-0.005	0.100+/-0.005	0.012/0.030	0.015+/-0.005	N/A
RM1010	B	0.105+/-0.007	0.100+/-0.005	0.015/0.033	0.015+/-0.005	0.015+/-0.005

NOTES:

1. Dimensions are in inches.

2. Metric equivalents are given for general information only.

3. Unless otherwise specified, tolerance is +/-0.0015 (0.13mm).

4. The pictorial view of the styles above are given as representative of the envelope of the item. Slight deviations from the outline shown, which are contained within the envelope, and do not alter the functional aspects of the device are acceptable

5. Configuration A covers termination material W.

6. Configuration B covers termination B and C.

APPLICATION NOTES FOR MIL-PRF-83401

1) Parts covered by this specification may contain internal soldered connections that may reflow during installation. Special care must be exercised when soldering to prevent internal solder reflow. Welded internal connections are recommended for space flight use. Consult the manufacturer for construction details.

2) Parts are acceptable for Level 2 applications.

3) Rescreening of these resistor networks is suggested in the form of a lot sample Destructive Physical Analysis (DPA) prior to use in spaceflight applications. Particular attention should be paid to the integrity of the termination attachment to the resistive element (i.e., cracked solder joints, misaligned connections). The DPA is suggested instead of the Thermal Shock and Voltage Conditioning tests recommended by GSFC's Preferred Parts List

(PPL-21) and NASA's Standard EEE Parts List (MIL-STD-975M which has been canceled). Evaluation of thermal shock and voltage conditioning test data amassed by NASA GSFC did not identify any significant fallout as a result of this rescreening. Most of the delta shifts identified were attributable to measurement accuracy problems and fixturing inconsistencies, especially for resistance values below 50 ohms where fixture contact resistance is a more significant factor in the overall delta resistance calculation. One manufacturer indicated that they routinely perform initial resistance measurements twice to ensure an accurate initial reading before test due to the difficulty in fixturing for consistent and accurate measurements.

4) Network resistors made with "thin" film construction are sensitive to Electrostatic Discharges (ESD).

Part Number Ordering Information, example and explanation:

M8340101H1002JA where,

M83401	01	H	1002	J	A
Associated Specification Number (Conforming to MIL-PRF-83401)	Detailed Specification Sheet Number (Slash Sheet)	Characteristic	Resistance Value (Ohms)	Resistance Tolerance	Schematic

Part number ordering options are developed using the following criteria:

Style	Detail Specification	Description
RZ010	MIL-PRF-83401/1	14 Pin Dual In-Line Package (DIP)
RZ020	MIL-PRF-83401/2	16 Pin Dual In-Line Package (DIP)
RZ030	MIL-PRF-83401/3	14 Pin Flat Pack
RZ070	MIL-PRF-83401/7	6 Pin Single In-Line Package (SIP)
RZ080	MIL-PRF-83401/8	8 Pin Single In-Line Package (SIP)
RZ090	MIL-PRF-83401/9	10 Pin Single In-Line Package (SIP)

Characteristic	Resistance Temperature Characteristic (Referenced to +25deg.C)
Y	+/-5 parts per million/deg.C
C	+/-50 parts per million/deg.C
V	+/-50 parts per million/deg.C
H	+/-50 parts per million/deg.C
K	+/-100 parts per million/deg.C
M	+/-300 parts per million/deg.C
R	+/-25 parts per million/deg.C

Resistance Tolerance		Schematic
V = +/-0.005%		A (Click Here for Diagram)
T = +/-0.01%		B (Click Here for Diagram)
A = +/-0.05%		C (Click Here for Diagram)
B = +/-0.1%		G (Click Here for Diagram)
D = +/-0.5%		
F = +/-1.0%		
G = +/-2.0%		
J = +/-5.0%		

Resistance Values:

Resistance values in ohms are identified by four characters. The first three digits represent significant figures and the last digit specifies the number of zeroes to follow. For example 1001 indicates 1,000 ohms and 1002 indicates 10,000 ohms. For values less than or equal to 100 ohms the letter "R" is used to indicate a decimal point. For example 10R0 indicates 10.0 ohms..

Revision History for MIL-PRF-83401 Listing in the NPSL

01/20/99	Added dimensional drawings to this section
07/27/98	Added application note warning that thin film resistor types are electrostatic sensitive (ESD).
03/11/98	Corrected RZ020 part listing. Part numbers inadvertently had "M8340101" instead of "M8340102".
03/09/98	Added Application Note #3 suggesting DPA as an effective rescreen
10/14/97	Initial Release of MIL-PRF-83401 Section in the NPSL On-line

Go to -

NEPP

|

NPSL

|

Resistors

MIL-PRF-83401, RESISTOR NETWORKS

Fixed, Resistor Networks, Film

RZ Styles

Part Number/Ordering Explanation

Important! Application Notes

Revision History for MIL-PRF-83401 Listing in the NPSL

Last Revision: 01/20/99

Click on the link below to see the associated parts selection listing:

Style	Detail Specification	Description (Power rating depends on Network Schematic and Characteristic ordered: See individual listings)
RZ010	MIL-PRF-83401/1	14 Pin Dual In-Line Package (DIP) 10 ohms to 1 Mohm
RZ020	MIL-PRF-83401/2	16 Pin Dual In-Line Package (DIP) 10 ohms to 1 Mohm
RZ030	MIL-PRF-83401/3	14 Pin Flat Pack 10 ohms to 1 Mohm
RZ070	MIL-PRF-83401/7	6 Pin Single In-Line Package (SIP) 10 ohms to 1 Mohm
RZ080	MIL-PRF-83401/8	8 Pin Single In-Line Package (SIP) 10 ohms to 1 Mohm
RZ090	MIL-PRF-83401/9	10 Pin Single In-Line Package (SIP) 10 ohms to 1 Mohm

MIL-PRF-83401/1 (RZ010) Film Resistor Networks

10.0 Ohms Through 1,000,000 Ohms

	Resistance	Power	Char.	Res.		

Part Number	Value (Ohms)	Rating	(^)	Tolerance	Schematic	Manufacturer
M8340101^10R0%&	10.0	Link at Top	C,H,K,M,V	F, G, J	A, B	DAL
M8340101^10R2%&	10.2		C,H,K,M,V	F	A, B	DAL
M8340101^10R5%&	10.5		C,H,K,M,V	F	A, B	DAL
M8340101^10R7%&	10.7		C,H,K,M,V	F	A, B	DAL
M8340101^11R0%&	11.0		C,H,K,M,V	F, G, J	A, B	DAL
M8340101^11R3%&	11.3	Link at Top	C,H,K,M,V	F	A, B	DAL
M8340101^11R5%&	11.5		C,H,K,M,V	F	A, B	DAL
M8340101^11R8%&	11.8		C,H,K,M,V	F	A, B	DAL
M8340101^12R0%&	12.0		C,H,K,M,V	F, G, J	A, B	DAL
M8340101^12R1%&	12.1		C,H,K,M,V	F	A, B	DAL
M8340101^12R4%&	12.4	Link at Top	C,H,K,M,V	F	A, B	DAL
M8340101^12R7%&	12.7		C,H,K,M,V	F	A, B	DAL
M8340101^13R0%&	13.0		C,H,K,M,V	F, G, J	A, B	DAL
M8340101^13R3%&	13.3		C,H,K,M,V	F	A, B	DAL
M8340101^13R7%&	13.7		C,H,K,M,V	F	A, B	DAL
M8340101^14R0%&	14.0	Link at Top	C,H,K,M,V	F	A, B	DAL
M8340101^14R3%&	14.3		C,H,K,M,V	F	A, B	DAL
M8340101^14R7%&	14.7		C,H,K,M,V	F	A, B	DAL
M8340101^15R0%&	15.0		C,H,K,M,V	F, G, J	A, B	DAL
M8340101^15R4%&	15.4		C,H,K,M,V	F	A, B	DAL
M8340101^15R8%&	15.8	Link at Top	C,H,K,M,V	F	A, B	DAL
M8340101^16R0%&	16.0		C,H,K,M,V	G, J	A, B	DAL
M8340101^16R2%&	16.2		C,H,K,M,V	F	A, B	DAL
M8340101^16R5%&	16.5		C,H,K,M,V	F	A, B	DAL
M8340101^16R9%&	16.9		C,H,K,M,V	F	A, B	DAL
M8340101^17R4%&	17.4	Link at Top	C,H,K,M,V	F	A, B	DAL
M8340101^17R8%&	17.8		C,H,K,M,V	F	A, B	DAL
M8340101^18R0%&	18.0		C,H,K,M,V	G, J	A, B	DAL
M8340101^18R2%&	18.2		C,H,K,M,V	F	A, B	DAL
M8340101^18R7%&	18.7		C,H,K,M,V	F	A, B	DAL
M8340101^19R1%&	19.1	Link at Top	C,H,K,M,V	F	A, B	DAL
M8340101^19R6%&	19.6		C,H,K,M,V	F	A, B	DAL
M8340101^20R0%&	20.0		C,H,K,M,V	F, G, J	A, B	DAL
M8340101^20R5%&	20.5		C,H,K,M,V	F	A, B	DAL
M8340101^21R0%&	21.0		C,H,K,M,V	F	A, B	DAL
M8340101^21R5%&	21.5	Link at Top	C,H,K,M,V	F	A, B	DAL
M8340101^22R0%&	22.0		C,H,K,M,V	G, J	A, B	DAL
M8340101^22R1%&	22.1		C,H,K,M,V	F	A, B	DAL
M8340101^22R6%&	22.6		C,H,K,M,V	F	A, B	DAL
M8340101^23R2%&	23.2		C,H,K,M,V	F	A, B	DAL
M8340101^23R7%&	23.7	Link at Top	C,H,K,M,V	F	A, B	DAL
M8340101^24R0%&	24.0		C,H,K,M,V	F, G, J	A, B	DAL
M8340101^24R3%&	24.3		C,H,K,M,V	F	A, B	DAL
M8340101^24R9%&	24.9		C,H,K,M,V	F	A, B	DAL
M8340101^25R5%&	25.5		C,H,K,M,V	F	A, B	DAL
M8340101^26R1%&	26.1	Link at Top	C,H,K,M,V	F	A, B	DAL

M8340101^26R7%&	26.7		C,H,K,M,V	F	A, B	DAL
M8340101^27R0%&	27.0		C,H,K,M,V	G, J	A, B	DAL,TEC
M8340101^27R4%&	27.4		C,H,K,M,V	F	A, B	DAL,TEC
M8340101^28R0%&	28.0		C,H,K,M,V	F	A, B	DAL,TEC
M8340101^28R7%&	28.7	Link at Top	C,H,K,M,V	F	A, B	DAL,TEC
M8340101^29R4%&	29.4		C,H,K,M,V	F	A, B	DAL,TEC
M8340101^30R0%&	30.0		C,H,K,M,V	G, J	A, B	DAL,TEC
M8340101^30R1%&	30.1		C,H,K,M,V	F	A, B	DAL,TEC
M8340101^30R9%&	30.9		C,H,K,M,V	F	A, B	DAL,TEC
M8340101^31R6%&	31.6	Link at Top	C,H,K,M,V	F	A, B	DAL,TEC
M8340101^32R4%&	32.4		C,H,K,M,V	F	A, B	DAL,TEC
M8340101^33R0%&	33.0		C,H,K,M,V	G, J	A, B	DAL,TEC
M8340101^33R2%&	33.2		C,H,K,M,V	F	A, B	DAL,TEC
M8340101^34R0%&	34.0		C,H,K,M,V	F	A, B	DAL,TEC
M8340101^34R8%&	34.8	Link at Top	C,H,K,M,V	F	A, B	DAL,TEC
M8340101^35R7%&	35.7		C,H,K,M,V	F	A, B	DAL,TEC
M8340101^36R0%&	36.0		C,H,K,M,V	G, J	A, B	DAL,TEC
M8340101^36R5%&	36.5		C,H,K,M,V	F	A, B	DAL,TEC
M8340101^37R4%&	37.4		C,H,K,M,V	F	A, B	DAL,TEC
M8340101^38R3%&	38.3	Link at Top	C,H,K,M,V	F	A, B	DAL,TEC
M8340101^39R0%&	39.0		C,H,K,M,V	G, J	A, B	DAL,TEC
M8340101^39R2%&	39.2		C,H,K,M,V	F	A, B	DAL,TEC
M8340101^40R2%&	40.2		C,H,K,M,V	F	A, B	DAL,TEC
M8340101^41R2%&	41.2		C,H,K,M,V	F	A, B	DAL,TEC
M8340101^42R2%&	42.2	Link at Top	C,H,K,M,V	F	A, B	DAL,TEC
M8340101^43R0%&	43.0		C,H,K,M,V	G, J	A, B	DAL,TEC
M8340101^43R2%&	43.2		C,H,K,M,V	F	A, B	DAL,TEC
M8340101^44R2%&	44.2		C,H,K,M,V	F	A, B	DAL,TEC
M8340101^45R3%&	45.3		C,H,K,M,V	F	A, B	DAL,TEC
M8340101^46R4%&	46.4	Link at Top	C,H,K,M,V	F	A, B	DAL,TEC
M8340101^47R0%&	47.0		C,H,K,M,V	G, J	A, B	DAL,TEC
M8340101^47R5%&	47.5		C,H,K,M,V	F	A, B	DAL,TEC
M8340101^48R7%&	48.7		C,H,K,M,V	F	A, B	DAL,TEC
M8340101^49R9%&	49.9		C,H,K,M,V	F	A, B	DAL,TEC
M8340101^51R0%&	51.0	Link at Top	C,H,K,M,V	G, J	A, B	DAL,IRC2,TEC
M8340101^51R1%&	51.1		C,H,K,M,V	F	A, B	DAL,IRC2,TEC
M8340101^52R3%&	52.3		C,H,K,M,V	F	A, B	DAL,IRC2,TEC
M8340101^53R6%&	53.6		C,H,K,M,V	F	A, B	DAL,IRC2,TEC
M8340101^54R9%&	54.9		C,H,K,M,V	F	A, B	DAL,IRC2,TEC
M8340101^56R0%&	56.0	Link at Top	C,H,K,M,V	G, J	A, B	DAL,IRC2,TEC
M8340101^56R2%&	56.2		C,H,K,M,V	F	A, B	DAL,IRC2,TEC
M8340101^57R6%&	57.6		C,H,K,M,V	F	A, B	DAL,IRC2,TEC
M8340101^59R0%&	59.0		C,H,K,M,V	F	A, B	DAL,IRC2,TEC
M8340101^60R4%&	60.4		C,H,K,M,V	F	A, B	DAL,IRC2,TEC
M8340101^61R9%&	61.9	Link at Top	C,H,K,M,V	F	A, B	DAL,IRC2,TEC
M8340101^62R0%&	62.0		C,H,K,M,V	G, J	A, B	DAL,IRC2,TEC
M8340101^63R4%&	63.4		C,H,K,M,V	F	A, B	DAL,IRC2,TEC

M8340101^64R9%&	64.9		C,H,K,M,V	F	A, B	DAL,IRC2,TEC
M8340101^66R5%&	66.5		C,H,K,M,V	F	A, B	DAL,IRC2,TEC
M8340101^68R0%&	68.0	Link at Top	C,H,K,M,V	G, J	A, B	DAL,IRC2,TEC
M8340101^68R1%&	68.1		C,H,K,M,V	F	A, B	DAL,IRC2,TEC
M8340101^69R8%&	69.8		C,H,K,M,V	F	A, B	DAL,IRC2,TEC
M8340101^71R5%&	71.5		C,H,K,M,V	F	A, B	DAL,IRC2,TEC
M8340101^73R2%&	73.2		C,H,K,M,V	F	A, B	DAL,IRC2,TEC
M8340101^75R0%&	75.0	Link at Top	C,H,K,M,V	F, G, J	A, B	DAL,IRC2,TEC
M8340101^76R8%&	76.8		C,H,K,M,V	F	A, B	DAL,IRC2,TEC
M8340101^78R7%&	78.7		C,H,K,M,V	F	A, B	DAL,IRC2,TEC
M8340101^80R6%&	80.6		C,H,K,M,V	F	A, B	DAL,IRC2,TEC
M8340101^82R0%&	82.0		C,H,K,M,V	G, J	A, B	DAL,IRC2,TEC
M8340101^82R5%&	82.5	Link at Top	C,H,K,M,V	F	A, B	DAL,IRC2,TEC
M8340101^84R5%&	84.5		C,H,K,M,V	F	A, B	DAL,IRC2,TEC
M8340101^86R6%&	86.6		C,H,K,M,V	F	A, B	DAL,IRC2,TEC
M8340101^88R7%&	88.7		C,H,K,M,V	F	A, B	DAL,IRC2,TEC
M8340101^90R9%&	90.9		C,H,K,M,V	F	A, B	DAL,IRC2,TEC
M8340101^91R0%&	91.0	Link at Top	C,H,K,M,V	G, J	A, B	DAL,IRC2,TEC
M8340101^93R1%&	93.1		C,H,K,M,V	F	A, B	DAL,IRC2,TEC
M8340101^95R3%&	95.3		C,H,K,M,V	F	A, B	DAL,IRC2,TEC
M8340101^97R6%&	97.6		C,H,K,M,V	F	A, B	DAL,IRC2,TEC
M8340101^1000%&	100		C,H,K,M,V	B, D, F, G, J	A, B	DAL,IRC2,TEC,VIS,VIS2
M8340101^1010%&	101	Link at Top	C,H,K,M,V	B, D	A, B	DAL,IRC2,TEC,VIS,VIS2
M8340101^1020%&	102		C,H,K,M,V	B, D, F	A, B	DAL,IRC2,TEC,VIS,VIS2
M8340101^1040%&	104		C,H,K,M,V	B, D	A, B	DAL,IRC2,TEC,VIS,VIS2
M8340101^1050%&	105		C,H,K,M,V	B, D, F	A, B	DAL,IRC2,TEC,VIS,VIS2
M8340101^1060%&	106		C,H,K,M,V	B, D	A, B	DAL,IRC2,TEC,VIS,VIS2
M8340101^1070%&	107	Link at Top	C,H,K,M,V	B, D, F	A, B	DAL,IRC2,TEC,VIS,VIS2
M8340101^1090%&	109		C,H,K,M,V	B, D	A, B	DAL,IRC2,TEC,VIS,VIS2
M8340101^1100%&	110		C,H,K,M,V	B, D, F, G, J	A, B	DAL,IRC2,TEC,VIS,VIS2
M8340101^1110%&	111		C,H,K,M,V	B, D	A, B	DAL,IRC2,TEC,VIS,VIS2
M8340101^1130%&	113		C,H,K,M,V	B, D, F	A, B	DAL,IRC2,TEC,VIS,VIS2
M8340101^1140%&	114	Link at Top	C,H,K,M,V	B, D	A, B	DAL,IRC2,TEC,VIS,VIS2
M8340101^1150%&	115		C,H,K,M,V	B, D, F	A, B	DAL,IRC2,TEC,VIS,VIS2
M8340101^1170%&	117		C,H,K,M,V	B, D	A, B	DAL,IRC2,TEC,VIS,VIS2
M8340101^1180%&	118		C,H,K,M,V	B, D, F	A, B	DAL,IRC2,TEC,VIS,VIS2
M8340101^1200%&	120		C,H,K,M,V	B, D, F, G, J	A, B	DAL,IRC2,TEC,VIS,VIS2
M8340101^1210%&	121	Link at Top	C,H,K,M,V	B, D, F	A, B	DAL,IRC2,TEC,VIS,VIS2
M8340101^1230%&	123		C,H,K,M,V	B, D	A, B	DAL,IRC2,TEC,VIS,VIS2
M8340101^1240%&	124		C,H,K,M,V	B, D, F	A, B	DAL,IRC2,TEC,VIS,VIS2
M8340101^1260%&	126		C,H,K,M,V	B, D	A, B	DAL,IRC2,TEC,VIS,VIS2
M8340101^1270%&	127		C,H,K,M,V	B, D, F	A, B	DAL,IRC2,TEC,VIS,VIS2
M8340101^1290%&	129	Link at Top	C,H,K,M,V	B, D	A, B	DAL,IRC2,TEC,VIS,VIS2
M8340101^1300%&	130		C,H,K,M,V	B, D, F, G, J	A, B	DAL,IRC2,TEC,VIS,VIS2
M8340101^1320%&	132		C,H,K,M,V	B, D	A, B	DAL,IRC2,TEC,VIS,VIS2
M8340101^1330%&	133		C,H,K,M,V	B, D, F	A, B	DAL,IRC2,TEC,VIS,VIS2
M8340101^1350%&	135	Link at Top	C,H,K,M,V	B, D	A, B	DAL,IRC2,TEC,VIS,VIS2

M8340101^1370%&	137		C,H,K,M,V	B, D, F	A, B	DAL,IRC2,TEC,VIS,VIS2
M8340101^1380%&	138		C,H,K,M,V	B, D	A, B	DAL,IRC2,TEC,VIS,VIS2
M8340101^1400%&	140		C,H,K,M,V	B, D, F	A, B	DAL,IRC2,TEC,VIS,VIS2
M8340101^1420%&	142		C,H,K,M,V	B, D	A, B	DAL,IRC2,TEC,VIS,VIS2
M8340101^1430%&	143	Link at Top	C,H,K,M,V	B, D, F	A, B	DAL,IRC2,TEC,VIS,VIS2
M8340101^1450%&	145		C,H,K,M,V	B, D	A, B	DAL,IRC2,TEC,VIS,VIS2
M8340101^1470%&	147		C,H,K,M,V	B, D, F	A, B	DAL,IRC2,TEC,VIS,VIS2
M8340101^1490%&	149		C,H,K,M,V	B, D	A, B	DAL,IRC2,TEC,VIS,VIS2
M8340101^1500%&	150		C,H,K,M,V	B, D, F, G, J	A, B	DAL,IRC2,TEC,VIS,VIS2
M8340101^1520%&	152	Link at Top	C,H,K,M,V	B, D	A, B	DAL,IRC2,TEC,VIS,VIS2
M8340101^1540%&	154		C,H,K,M,V	B, D, F	A, B	DAL,IRC2,TEC,VIS,VIS2
M8340101^1560%&	156		C,H,K,M,V	B, D	A, B	DAL,IRC2,TEC,VIS,VIS2
M8340101^1580%&	158		C,H,K,M,V	B, D, F	A, B	DAL,IRC2,TEC,VIS,VIS2
M8340101^1600%&	160		C,H,K,M,V	B, D, G, J	A, B	DAL,IRC2,TEC,VIS,VIS2
M8340101^1620%&	162	Link at Top	C,H,K,M,V	B, D, F	A, B	DAL,IRC2,TEC,VIS,VIS2
M8340101^1640%&	164		C,H,K,M,V	B, D	A, B	DAL,IRC2,TEC,VIS,VIS2
M8340101^1650%&	165		C,H,K,M,V	B, D, F	A, B	DAL,IRC2,TEC,VIS,VIS2
M8340101^1670%&	167		C,H,K,M,V	B, D	A, B	DAL,IRC2,TEC,VIS,VIS2
M8340101^1690%&	169		C,H,K,M,V	B, D, F	A, B	DAL,IRC2,TEC,VIS,VIS2
M8340101^1720%&	172	Link at Top	C,H,K,M,V	B, D	A, B	DAL,IRC2,TEC,VIS,VIS2
M8340101^1740%&	174		C,H,K,M,V	B, D, F	A, B	DAL,IRC2,TEC,VIS,VIS2
M8340101^1760%&	176		C,H,K,M,V	B, D	A, B	DAL,IRC2,TEC,VIS,VIS2
M8340101^1780%&	178		C,H,K,M,V	B, D, F	A, B	DAL,IRC2,TEC,VIS,VIS2
M8340101^1800%&	180		C,H,K,M,V	B, D, G, J	A, B	DAL,IRC2,TEC,VIS,VIS2
M8340101^1820%&	182	Link at Top	C,H,K,M,V	B, D, F	A, B	DAL,IRC2,TEC,VIS,VIS2
M8340101^1840%&	184		C,H,K,M,V	B, D	A, B	DAL,IRC2,TEC,VIS,VIS2
M8340101^1870%&	187		C,H,K,M,V	B, D, F	A, B	DAL,IRC2,TEC,VIS,VIS2
M8340101^1890%&	189		C,H,K,M,V	B, D	A, B	DAL,IRC2,TEC,VIS,VIS2
M8340101^1910%&	191		C,H,K,M,V	B, D, F	A, B	DAL,IRC2,TEC,VIS,VIS2
M8340101^1930%&	193	Link at Top	C,H,K,M,V	B, D	A, B	DAL,IRC2,TEC,VIS,VIS2
M8340101^1960%&	196		C,H,K,M,V	B, D, F	A, B	DAL,IRC2,TEC,VIS,VIS2
M8340101^1980%&	198		C,H,K,M,V	B, D	A, B	DAL,IRC2,TEC,VIS,VIS2
M8340101^2000%&	200		C,H,K,M,V	B, D, F, G, J	A, B	DAL,IRC2,TEC,VIS,VIS2
M8340101^2030%&	203		C,H,K,M,V	B, D	A, B	DAL,IRC2,TEC,VIS,VIS2
M8340101^2050%&	205	Link at Top	C,H,K,M,V	B, D, F	A, B	DAL,IRC2,TEC,VIS,VIS2
M8340101^2080%&	208		C,H,K,M,V	B, D	A, B	DAL,IRC2,TEC,VIS,VIS2
M8340101^2100%&	210		C,H,K,M,V	B, D, F	A, B	DAL,IRC2,TEC,VIS,VIS2
M8340101^2130%&	213		C,H,K,M,V	B, D	A, B	DAL,IRC2,TEC,VIS,VIS2
M8340101^2150%&	215		C,H,K,M,V	B, D, F	A, B	DAL,IRC2,TEC,VIS,VIS2
M8340101^2180%&	218	Link at Top	C,H,K,M,V	B, D	A, B	DAL,IRC2,TEC,VIS,VIS2
M8340101^2200%&	220		C,H,K,M,V	G, J	A, B	DAL,IRC2,TEC,VIS,VIS2
M8340101^2210%&	221		C,H,K,M,V	B, D, F	A, B	DAL,IRC2,TEC,VIS,VIS2
M8340101^2230%&	223		C,H,K,M,V	B, D	A, B	DAL,IRC2,TEC,VIS,VIS2
M8340101^2260%&	226		C,H,K,M,V	B, D, F	A, B	DAL,IRC2,TEC,VIS,VIS2
M8340101^2290%&	229	Link at Top	C,H,K,M,V	B, D	A, B	DAL,IRC2,TEC,VIS,VIS2
M8340101^2320%&	232		C,H,K,M,V	B, D, F	A, B	DAL,IRC2,TEC,VIS,VIS2
M8340101^2340%&	234		C,H,K,M,V	B, D	A, B	DAL,IRC2,TEC,VIS,VIS2

M8340101^2370%&	237		C,H,K,M,V	B, D, F	A, B	DAL,IRC2,TEC,VIS,VIS2
M8340101^2400%&	240		C,H,K,M,V	B, D, F, G, J	A, B	DAL,IRC2,TEC,VIS,VIS2
M8340101^2430%&	243	Link at Top	C,H,K,M,V	B, D, F	A, B	DAL,IRC2,TEC,VIS,VIS2
M8340101^2460%&	246		C,H,K,M,V	B, D	A, B	DAL,IRC2,TEC,VIS,VIS2
M8340101^2490%&	249		C,H,K,M,V	B, D, F	A, B	DAL,IRC2,TEC,VIS,VIS2
M8340101^2520%&	252		C,H,K,M,V	B, D	A, B	DAL,IRC2,TEC,VIS,VIS2
M8340101^2550%&	255		C,H,K,M,V	B, D, F	A, B	DAL,IRC2,TEC,VIS,VIS2
M8340101^2580%&	258	Link at Top	C,H,K,M,V	B, D	A, B	DAL,IRC2,TEC,VIS,VIS2
M8340101^2610%&	261		C,H,K,M,V	B, D, F	A, B	DAL,IRC2,TEC,VIS,VIS2
M8340101^2640%&	264		C,H,K,M,V	B, D	A, B	DAL,IRC2,TEC,VIS,VIS2
M8340101^2670%&	267		C,H,K,M,V	B, D, F	A, B	DAL,IRC2,TEC,VIS,VIS2
M8340101^2700%&	270		C,H,K,M,V	G, J	A, B	DAL,IRC2,TEC,VIS,VIS2
M8340101^2710%&	271	Link at Top	C,H,K,M,V	B, D	A, B	DAL,IRC2,TEC,VIS,VIS2
M8340101^2740%&	274		C,H,K,M,V	B, D, F	A, B	DAL,IRC2,TEC,VIS,VIS2
M8340101^2770%&	277		C,H,K,M,V	B, D	A, B	DAL,IRC2,TEC,VIS,VIS2
M8340101^2800%&	280		C,H,K,M,V	B, D, F	A, B	DAL,IRC2,TEC,VIS,VIS2
M8340101^2840%&	284		C,H,K,M,V	B, D	A, B	DAL,IRC2,TEC,VIS,VIS2
M8340101^2870%&	287	Link at Top	C,H,K,M,V	B, D, F	A, B	DAL,IRC2,TEC,VIS,VIS2
M8340101^2910%&	291		C,H,K,M,V	B, D	A, B	DAL,IRC2,TEC,VIS,VIS2
M8340101^2940%&	294		C,H,K,M,V	B, D, F	A, B	DAL,IRC2,TEC,VIS,VIS2
M8340101^2980%&	298		C,H,K,M,V	B, D	A, B	DAL,IRC2,TEC,VIS,VIS2
M8340101^3000%&	300		C,H,K,M,V	G, J	A, B	DAL,IRC2,TEC,VIS,VIS2
M8340101^3010%&	301	Link at Top	C,H,K,M,V	B, D, F	A, B	DAL,IRC2,TEC,VIS,VIS2
M8340101^3050%&	305		C,H,K,M,V	B, D	A, B	DAL,IRC2,TEC,VIS,VIS2
M8340101^3090%&	309		C,H,K,M,V	B, D, F	A, B	DAL,IRC2,TEC,VIS,VIS2
M8340101^3120%&	312		C,H,K,M,V	B, D	A, B	DAL,IRC2,TEC,VIS,VIS2
M8340101^3160%&	316		C,H,K,M,V	B, D, F	A, B	DAL,IRC2,TEC,VIS,VIS2
M8340101^3200%&	320	Link at Top	C,H,K,M,V	B, D	A, B	DAL,IRC2,TEC,VIS,VIS2
M8340101^3240%&	324		C,H,K,M,V	B, D, F	A, B	DAL,IRC2,TEC,VIS,VIS2
M8340101^3280%&	328		C,H,K,M,V	B, D	A, B	DAL,IRC2,TEC,VIS,VIS2
M8340101^3300%&	330		C,H,K,M,V	G, J	A, B	DAL,IRC2,TEC,VIS,VIS2
M8340101^3320%&	332		C,H,K,M,V	B, D, F	A, B	DAL,IRC2,TEC,VIS,VIS2
M8340101^3360%&	336	Link at Top	C,H,K,M,V	B, D	A, B	DAL,IRC2,TEC,VIS,VIS2
M8340101^3400%&	340		C,H,K,M,V	B, D, F	A, B	DAL,IRC2,TEC,VIS,VIS2
M8340101^3440%&	344		C,H,K,M,V	B, D	A, B	DAL,IRC2,TEC,VIS,VIS2
M8340101^3480%&	348		C,H,K,M,V	B, D, F	A, B	DAL,IRC2,TEC,VIS,VIS2
M8340101^3520%&	352		C,H,K,M,V	B, D	A, B	DAL,IRC2,TEC,VIS,VIS2
M8340101^3570%&	357	Link at Top	C,H,K,M,V	B, D, F	A, B	DAL,IRC2,TEC,VIS,VIS2
M8340101^3600%&	360		C,H,K,M,V	G, J	A, B	DAL,IRC2,TEC,VIS,VIS2
M8340101^3610%&	361		C,H,K,M,V	B, D	A, B	DAL,IRC2,TEC,VIS,VIS2
M8340101^3650%&	365		C,H,K,M,V	B, D, F	A, B	DAL,IRC2,TEC,VIS,VIS2
M8340101^3700%&	370		C,H,K,M,V	B, D	A, B	DAL,IRC2,TEC,VIS,VIS2
M8340101^3740%&	374	Link at Top	C,H,K,M,V	B, D, F	A, B	DAL,IRC2,TEC,VIS,VIS2
M8340101^3790%&	379		C,H,K,M,V	B, D	A, B	DAL,IRC2,TEC,VIS,VIS2
M8340101^3830%&	383		C,H,K,M,V	B, D, F	A, B	DAL,IRC2,TEC,VIS,VIS2
M8340101^3880%&	388		C,H,K,M,V	B, D	A, B	DAL,IRC2,TEC,VIS,VIS2
M8340101^3900%&	390		C,H,K,M,V	G, J	A, B	DAL,IRC2,TEC,VIS,VIS2

M8340101^3920%&	392	Link at Top	C,H,K,M,V	B, D, F	A, B	DAL,IRC2,TEC,VIS,VIS2
M8340101^3970%&	397		C,H,K,M,V	B, D	A, B	DAL,IRC2,TEC,VIS,VIS2
M8340101^4020%&	402		C,H,K,M,V	B, D, F	A, B	DAL,IRC2,TEC,VIS,VIS2
M8340101^4070%&	407		C,H,K,M,V	B, D	A, B	DAL,IRC2,TEC,VIS,VIS2
M8340101^4120%&	412		C,H,K,M,V	B, D, F	A, B	DAL,IRC2,TEC,VIS,VIS2
M8340101^4170%&	417	Link at Top	C,H,K,M,V	B, D	A, B	DAL,IRC2,TEC,VIS,VIS2
M8340101^4220%&	422		C,H,K,M,V	B, D, F	A, B	DAL,IRC2,TEC,VIS,VIS2
M8340101^4270%&	427		C,H,K,M,V	B, D	A, B	DAL,IRC2,TEC,VIS,VIS2
M8340101^4300%&	430		C,H,K,M,V	G, J	A, B	DAL,IRC2,TEC,VIS,VIS2
M8340101^4320%&	432		C,H,K,M,V	B, D, F	A, B	DAL,IRC2,TEC,VIS,VIS2
M8340101^4370%&	437	Link at Top	C,H,K,M,V	B, D	A, B	DAL,IRC2,TEC,VIS,VIS2
M8340101^4420%&	442		C,H,K,M,V	B, D, F	A, B	DAL,IRC2,TEC,VIS,VIS2
M8340101^4480%&	448		C,H,K,M,V	B, D	A, B	DAL,IRC2,TEC,VIS,VIS2
M8340101^4530%&	453		C,H,K,M,V	B, D, F	A, B	DAL,IRC2,TEC,VIS,VIS2
M8340101^4590%&	459		C,H,K,M,V	B, D	A, B	DAL,IRC2,TEC,VIS,VIS2
M8340101^4640%&	464	Link at Top	C,H,K,M,V	B, D, F	A, B	DAL,IRC2,TEC,VIS,VIS2
M8340101^4700%&	470		C,H,K,M,V	B, D, G, J	A, B	DAL,IRC2,TEC,VIS,VIS2
M8340101^4750%&	475		C,H,K,M,V	B, D, F	A, B	DAL,IRC2,TEC,VIS,VIS2
M8340101^4810%&	481		C,H,K,M,V	B, D	A, B	DAL,IRC2,TEC,VIS,VIS2
M8340101^4870%&	487		C,H,K,M,V	B, D, F	A, B	DAL,IRC2,TEC,VIS,VIS2
M8340101^4930%&	493	Link at Top	C,H,K,M,V	B, D	A, B	DAL,IRC2,TEC,VIS,VIS2
M8340101^4990%&	499		C,H,K,M,V	B, D, F	A, B	DAL,IRC2,TEC,VIS,VIS2
M8340101^5050%&	505		C,H,K,M,V	B, D	A, B	DAL,IRC2,TEC,VIS,VIS2
M8340101^5100%&	510		C,H,K,M,V	G, J	A, B	DAL,IRC2,TEC,VIS,VIS2
M8340101^5110%&	511		C,H,K,M,V	B, D, F	A, B	DAL,IRC2,TEC,VIS,VIS2
M8340101^5170%&	517	Link at Top	C,H,K,M,V	B, D	A, B	DAL,IRC2,TEC,VIS,VIS2
M8340101^5230%&	523		C,H,K,M,V	B, D, F	A, B	DAL,IRC2,TEC,VIS,VIS2
M8340101^5300%&	530		C,H,K,M,V	B, D	A, B	DAL,IRC2,TEC,VIS,VIS2
M8340101^5360%&	536		C,H,K,M,V	B, D, F	A, B	DAL,IRC2,TEC,VIS,VIS2
M8340101^5420%&	542		C,H,K,M,V	B, D	A, B	DAL,IRC2,TEC,VIS,VIS2
M8340101^5490%&	549	Link at Top	C,H,K,M,V	B, D, F	A, B	DAL,IRC2,TEC,VIS,VIS2
M8340101^5560%&	556		C,H,K,M,V	B, D	A, B	DAL,IRC2,TEC,VIS,VIS2
M8340101^5600%&	560		C,H,K,M,V	G, J	A, B	DAL,IRC2,TEC,VIS,VIS2
M8340101^5620%&	562		C,H,K,M,V	B, D, F	A, B	DAL,IRC2,TEC,VIS,VIS2
M8340101^5690%&	569		C,H,K,M,V	B, D	A, B	DAL,IRC2,TEC,VIS,VIS2
M8340101^5760%&	576	Link at Top	C,H,K,M,V	B, D, F	A, B	DAL,IRC2,TEC,VIS,VIS2
M8340101^5830%&	583		C,H,K,M,V	B, D	A, B	DAL,IRC2,TEC,VIS,VIS2
M8340101^5900%&	590		C,H,K,M,V	B, D, F	A, B	DAL,IRC2,TEC,VIS,VIS2
M8340101^5970%&	597		C,H,K,M,V	B, D	A, B	DAL,IRC2,TEC,VIS,VIS2
M8340101^6040%&	604		C,H,K,M,V	B, D, F	A, B	DAL,IRC2,TEC,VIS,VIS2
M8340101^6120%&	612	Link at Top	C,H,K,M,V	B, D	A, B	DAL,IRC2,TEC,VIS,VIS2
M8340101^6190%&	619		C,H,K,M,V	B, D, F	A, B	DAL,IRC2,TEC,VIS,VIS2
M8340101^6200%&	620		C,H,K,M,V	G, J	A, B	DAL,IRC2,TEC,VIS,VIS2
M8340101^6260%&	626		C,H,K,M,V	B, D	A, B	DAL,IRC2,TEC,VIS,VIS2
M8340101^6340%&	634		C,H,K,M,V	B, D, F	A, B	DAL,IRC2,TEC,VIS,VIS2
M8340101^6420%&	642	Link at Top	C,H,K,M,V	B, D	A, B	DAL,IRC2,TEC,VIS,VIS2
M8340101^6490%&	649		C,H,K,M,V	B, D, F	A, B	DAL,IRC2,TEC,VIS,VIS2

M8340101^6570%&	657		C,H,K,M,V	B, D	A, B	DAL,IRC2,TEC,VIS,VIS2
M8340101^6650%&	665		C,H,K,M,V	B, D, F	A, B	DAL,IRC2,TEC,VIS,VIS2
M8340101^6730%&	673		C,H,K,M,V	B, D	A, B	DAL,IRC2,TEC,VIS,VIS2
M8340101^6800%&	680	Link at Top	C,H,K,M,V	G, J	A, B	DAL,IRC2,TEC,VIS,VIS2
M8340101^6810%&	681		C,H,K,M,V	B, D, F	A, B	DAL,IRC2,TEC,VIS,VIS2
M8340101^6900%&	690		C,H,K,M,V	B, D	A, B	DAL,IRC2,TEC,VIS,VIS2
M8340101^6980%&	698		C,H,K,M,V	B, D, F	A, B	DAL,IRC2,TEC,VIS,VIS2
M8340101^7060%&	706		C,H,K,M,V	B, D	A, B	DAL,IRC2,TEC,VIS,VIS2
M8340101^7150%&	715	Link at Top	C,H,K,M,V	B, D, F	A, B	DAL,IRC2,TEC,VIS,VIS2
M8340101^7230%&	723		C,H,K,M,V	B, D	A, B	DAL,IRC2,TEC,VIS,VIS2
M8340101^7320%&	732		C,H,K,M,V	B, D, F	A, B	DAL,IRC2,TEC,VIS,VIS2
M8340101^7410%&	741		C,H,K,M,V	B, D	A, B	DAL,IRC2,TEC,VIS,VIS2
M8340101^7500%&	750		C,H,K,M,V	B, D, F, G, J	A, B	DAL,IRC2,TEC,VIS,VIS2
M8340101^7590%&	759	Link at Top	C,H,K,M,V	B, D	A, B	DAL,IRC2,TEC,VIS,VIS2
M8340101^7680%&	768		C,H,K,M,V	B, D, F	A, B	DAL,IRC2,TEC,VIS,VIS2
M8340101^7770%&	777		C,H,K,M,V	B, D	A, B	DAL,IRC2,TEC,VIS,VIS2
M8340101^7870%&	787		C,H,K,M,V	B, D, F	A, B	DAL,IRC2,TEC,VIS,VIS2
M8340101^7960%&	796		C,H,K,M,V	B, D	A, B	DAL,IRC2,TEC,VIS,VIS2
M8340101^8060%&	806	Link at Top	C,H,K,M,V	B, D, F	A, B	DAL,IRC2,TEC,VIS,VIS2
M8340101^8160%&	816		C,H,K,M,V	B, D	A, B	DAL,IRC2,TEC,VIS,VIS2
M8340101^8200%&	820		C,H,K,M,V	G, J	A, B	DAL,IRC2,TEC,VIS,VIS2
M8340101^8250%&	825		C,H,K,M,V	B, D, F	A, B	DAL,IRC2,TEC,VIS,VIS2
M8340101^8350%&	835		C,H,K,M,V	B, D	A, B	DAL,IRC2,TEC,VIS,VIS2
M8340101^8450%&	845	Link at Top	C,H,K,M,V	B, D, F	A, B	DAL,IRC2,TEC,VIS,VIS2
M8340101^8560%&	856		C,H,K,M,V	B, D	A, B	DAL,IRC2,TEC,VIS,VIS2
M8340101^8660%&	866		C,H,K,M,V	B, D, F	A, B	DAL,IRC2,TEC,VIS,VIS2
M8340101^8760%&	876		C,H,K,M,V	B, D	A, B	DAL,IRC2,TEC,VIS,VIS2
M8340101^8870%&	887		C,H,K,M,V	B, D, F	A, B	DAL,IRC2,TEC,VIS,VIS2
M8340101^8980%&	898	Link at Top	C,H,K,M,V	B, D	A, B	DAL,IRC2,TEC,VIS,VIS2
M8340101^9090%&	909		C,H,K,M,V	B, D, F	A, B	DAL,IRC2,TEC,VIS,VIS2
M8340101^9100%&	910		C,H,K,M,V	G, J	A, B	DAL,IRC2,TEC,VIS,VIS2
M8340101^9200%&	920		C,H,K,M,V	B, D	A, B	DAL,IRC2,TEC,VIS,VIS2
M8340101^9310%&	931		C,H,K,M,V	B, D, F	A, B	DAL,IRC2,TEC,VIS,VIS2
M8340101^9420%&	942	Link at Top	C,H,K,M,V	B, D	A, B	DAL,IRC2,TEC,VIS,VIS2
M8340101^9530%&	953		C,H,K,M,V	B, D, F	A, B	DAL,IRC2,TEC,VIS,VIS2
M8340101^9650%&	965		C,H,K,M,V	B, D	A, B	DAL,IRC2,TEC,VIS,VIS2
M8340101^9760%&	976		C,H,K,M,V	B, D, F	A, B	DAL,IRC2,TEC,VIS,VIS2
M8340101^9880%&	988		C,H,K,M,V	B, D	A, B	DAL,IRC2,TEC,VIS,VIS2
M8340101^1001%&	1,000	Link at Top	C,H,K,M,V	B, D, F, G, J	A, B	DAL,IRC2,TEC,VIS,VIS2
M8340101^1011%&	1,010		C,H,K,M,V	B, D	A, B	DAL,IRC2,TEC,VIS,VIS2
M8340101^1021%&	1,020		C,H,K,M,V	B, D, F	A, B	DAL,IRC2,TEC,VIS,VIS2
M8340101^1041%&	1,040		C,H,K,M,V	B, D	A, B	DAL,IRC2,TEC,VIS,VIS2
M8340101^1051%&	1,050		C,H,K,M,V	B, D, F	A, B	DAL,IRC2,TEC,VIS,VIS2
M8340101^1061%&	1,060	Link at Top	C,H,K,M,V	B, D	A, B	DAL,IRC2,TEC,VIS,VIS2
M8340101^1071%&	1,070		C,H,K,M,V	B, D, F	A, B	DAL,IRC2,TEC,VIS,VIS2
M8340101^1091%&	1,090		C,H,K,M,V	B, D	A, B	DAL,IRC2,TEC,VIS,VIS2
M8340101^1101%&	1,100		C,H,K,M,V	B, D, F, G, J	A, B	DAL,IRC2,TEC,VIS,VIS2

M8340101^1111%&	1,110		C,H,K,M,V	B, D	A, B	DAL,IRC2,TEC,VIS,VIS2
M8340101^1131%&	1,130	Link at Top	C,H,K,M,V	B, D, F	A, B	DAL,IRC2,TEC,VIS,VIS2
M8340101^1141%&	1,140		C,H,K,M,V	B, D	A, B	DAL,IRC2,TEC,VIS,VIS2
M8340101^1151%&	1,150		C,H,K,M,V	B, D, F	A, B	DAL,IRC2,TEC,VIS,VIS2
M8340101^1171%&	1,170		C,H,K,M,V	B, D	A, B	DAL,IRC2,TEC,VIS,VIS2
M8340101^1181%&	1,180		C,H,K,M,V	B, D, F	A, B	DAL,IRC2,TEC,VIS,VIS2
M8340101^1201%&	1,200	Link at Top	C,H,K,M,V	B, D, F, G, J	A, B	DAL,IRC2,TEC,VIS,VIS2
M8340101^1211%&	1,210		C,H,K,M,V	B, D, F	A, B	DAL,IRC2,TEC,VIS,VIS2
M8340101^1231%&	1,230		C,H,K,M,V	B, D	A, B	DAL,IRC2,TEC,VIS,VIS2
M8340101^1241%&	1,240		C,H,K,M,V	B, D, F	A, B	DAL,IRC2,TEC,VIS,VIS2
M8340101^1261%&	1,260		C,H,K,M,V	B, D	A, B	DAL,IRC2,TEC,VIS,VIS2
M8340101^1271%&	1,270	Link at Top	C,H,K,M,V	B, D, F	A, B	DAL,IRC2,TEC,VIS,VIS2
M8340101^1291%&	1,290		C,H,K,M,V	B, D	A, B	DAL,IRC2,TEC,VIS,VIS2
M8340101^1301%&	1,300		C,H,K,M,V	B, D, F, G, J	A, B	DAL,IRC2,TEC,VIS,VIS2
M8340101^1321%&	1,320		C,H,K,M,V	B, D	A, B	DAL,IRC2,TEC,VIS,VIS2
M8340101^1331%&	1,330		C,H,K,M,V	B, D, F	A, B	DAL,IRC2,TEC,VIS,VIS2
M8340101^1351%&	1,350	Link at Top	C,H,K,M,V	B, D	A, B	DAL,IRC2,TEC,VIS,VIS2
M8340101^1371%&	1,370		C,H,K,M,V	B, D, F	A, B	DAL,IRC2,TEC,VIS,VIS2
M8340101^1381%&	1,380		C,H,K,M,V	B, D	A, B	DAL,IRC2,TEC,VIS,VIS2
M8340101^1401%&	1,400		C,H,K,M,V	B, D, F	A, B	DAL,IRC2,TEC,VIS,VIS2
M8340101^1421%&	1,420		C,H,K,M,V	B, D	A, B	DAL,IRC2,TEC,VIS,VIS2
M8340101^1431%&	1,430	Link at Top	C,H,K,M,V	B, D, F	A, B	DAL,IRC2,TEC,VIS,VIS2
M8340101^1451%&	1,450		C,H,K,M,V	B, D	A, B	DAL,IRC2,TEC,VIS,VIS2
M8340101^1471%&	1,470		C,H,K,M,V	B, D, F	A, B	DAL,IRC2,TEC,VIS,VIS2
M8340101^1491%&	1,490		C,H,K,M,V	B, D	A, B	DAL,IRC2,TEC,VIS,VIS2
M8340101^1501%&	1,500		C,H,K,M,V	B, D, F, G, J	A, B	DAL,IRC2,TEC,VIS,VIS2
M8340101^1521%&	1,520	Link at Top	C,H,K,M,V	B, D	A, B	DAL,IRC2,TEC,VIS,VIS2
M8340101^1541%&	1,540		C,H,K,M,V	B, D, F	A, B	DAL,IRC2,TEC,VIS,VIS2
M8340101^1561%&	1,560		C,H,K,M,V	B, D	A, B	DAL,IRC2,TEC,VIS,VIS2
M8340101^1581%&	1,580		C,H,K,M,V	B, D, F	A, B	DAL,IRC2,TEC,VIS,VIS2
M8340101^1601%&	1,600		C,H,K,M,V	B, D, G, J	A, B	DAL,IRC2,TEC,VIS,VIS2
M8340101^1621%&	1,620	Link at Top	C,H,K,M,V	B, D, F	A, B	DAL,IRC2,TEC,VIS,VIS2
M8340101^1641%&	1,640		C,H,K,M,V	B, D	A, B	DAL,IRC2,TEC,VIS,VIS2
M8340101^1651%&	1,650		C,H,K,M,V	B, D, F	A, B	DAL,IRC2,TEC,VIS,VIS2
M8340101^1671%&	1,670		C,H,K,M,V	B, D	A, B	DAL,IRC2,TEC,VIS,VIS2
M8340101^1691%&	1,690		C,H,K,M,V	B, D, F	A, B	DAL,IRC2,TEC,VIS,VIS2
M8340101^1721%&	1,720	Link at Top	C,H,K,M,V	B, D	A, B	DAL,IRC2,TEC,VIS,VIS2
M8340101^1741%&	1,740		C,H,K,M,V	B, D, F	A, B	DAL,IRC2,TEC,VIS,VIS2
M8340101^1761%&	1,760		C,H,K,M,V	B, D	A, B	DAL,IRC2,TEC,VIS,VIS2
M8340101^1781%&	1,780		C,H,K,M,V	B, D, F	A, B	DAL,IRC2,TEC,VIS,VIS2
M8340101^1801%&	1,800		C,H,K,M,V	B, D, G, J	A, B	DAL,IRC2,TEC,VIS,VIS2
M8340101^1821%&	1,820	Link at Top	C,H,K,M,V	B, D, F	A, B	DAL,IRC2,TEC,VIS,VIS2
M8340101^1841%&	1,840		C,H,K,M,V	B, D	A, B	DAL,IRC2,TEC,VIS,VIS2
M8340101^1871%&	1,870		C,H,K,M,V	B, D, F	A, B	DAL,IRC2,TEC,VIS,VIS2
M8340101^1891%&	1,890		C,H,K,M,V	B, D	A, B	DAL,IRC2,TEC,VIS,VIS2
M8340101^1911%&	1,910		C,H,K,M,V	B, D, F	A, B	DAL,IRC2,TEC,VIS,VIS2
M8340101^1931%&	1,930	Link at Top	C,H,K,M,V	B, D	A, B	DAL,IRC2,TEC,VIS,VIS2

M8340101^1961%&	1,960		C,H,K,M,V	B, D, F	A, B	DAL,IRC2,TEC,VIS,VIS2
M8340101^1981%&	1,980		C,H,K,M,V	B, D	A, B	DAL,IRC2,TEC,VIS,VIS2
M8340101^2001%&	2,000		C,H,K,M,V	B, D, F, G, J	A, B	DAL,IRC2,TEC,VIS,VIS2
M8340101^2031%&	2,030		C,H,K,M,V	B, D	A, B	DAL,IRC2,TEC,VIS,VIS2
M8340101^2051%&	2,050	Link at Top	C,H,K,M,V	B, D, F	A, B	DAL,IRC2,TEC,VIS,VIS2
M8340101^2081%&	2,080		C,H,K,M,V	B, D	A, B	DAL,IRC2,TEC,VIS,VIS2
M8340101^2101%&	2,100		C,H,K,M,V	B, D, F	A, B	DAL,IRC2,TEC,VIS,VIS2
M8340101^2131%&	2,130		C,H,K,M,V	B, D	A, B	DAL,IRC2,TEC,VIS,VIS2
M8340101^2151%&	2,150		C,H,K,M,V	B, D, F	A, B	DAL,IRC2,TEC,VIS,VIS2
M8340101^2181%&	2,180	Link at Top	C,H,K,M,V	B, D	A, B	DAL,IRC2,TEC,VIS,VIS2
M8340101^2201%&	2,200		C,H,K,M,V	G, J	A, B	DAL,IRC2,TEC,VIS,VIS2
M8340101^2211%&	2,210		C,H,K,M,V	B, D, F	A, B	DAL,IRC2,TEC,VIS,VIS2
M8340101^2231%&	2,230		C,H,K,M,V	B, D	A, B	DAL,IRC2,TEC,VIS,VIS2
M8340101^2261%&	2,260		C,H,K,M,V	B, D, F	A, B	DAL,IRC2,TEC,VIS,VIS2
M8340101^2291%&	2,290	Link at Top	C,H,K,M,V	B, D	A, B	DAL,IRC2,TEC,VIS,VIS2
M8340101^2321%&	2,320		C,H,K,M,V	B, D, F	A, B	DAL,IRC2,TEC,VIS,VIS2
M8340101^2341%&	2,340		C,H,K,M,V	B, D	A, B	DAL,IRC2,TEC,VIS,VIS2
M8340101^2371%&	2,370		C,H,K,M,V	B, D, F	A, B	DAL,IRC2,TEC,VIS,VIS2
M8340101^2401%&	2,400		C,H,K,M,V	B, D, F, G, J	A, B	DAL,IRC2,TEC,VIS,VIS2
M8340101^2431%&	2,430	Link at Top	C,H,K,M,V	B, D, F	A, B	DAL,IRC2,TEC,VIS,VIS2
M8340101^2461%&	2,460		C,H,K,M,V	B, D	A, B	DAL,IRC2,TEC,VIS,VIS2
M8340101^2491%&	2,490		C,H,K,M,V	B, D, F	A, B	DAL,IRC2,TEC,VIS,VIS2
M8340101^2521%&	2,520		C,H,K,M,V	B, D	A, B	DAL,IRC2,TEC,VIS,VIS2
M8340101^2551%&	2,550		C,H,K,M,V	B, D, F	A, B	DAL,IRC2,TEC,VIS,VIS2
M8340101^2581%&	2,580	Link at Top	C,H,K,M,V	B, D	A, B	DAL,IRC2,TEC,VIS,VIS2
M8340101^2611%&	2,610		C,H,K,M,V	B, D, F	A, B	DAL,IRC2,TEC,VIS,VIS2
M8340101^2641%&	2,640		C,H,K,M,V	B, D	A, B	DAL,IRC2,TEC,VIS,VIS2
M8340101^2671%&	2,670		C,H,K,M,V	B, D, F	A, B	DAL,IRC2,TEC,VIS,VIS2
M8340101^2701%&	2,700		C,H,K,M,V	G, J	A, B	DAL,IRC2,TEC,VIS,VIS2
M8340101^2711%&	2,710	Link at Top	C,H,K,M,V	B, D	A, B	DAL,IRC2,TEC,VIS,VIS2
M8340101^2741%&	2,740		C,H,K,M,V	B, D, F	A, B	DAL,IRC2,TEC,VIS,VIS2
M8340101^2771%&	2,770		C,H,K,M,V	B, D	A, B	DAL,IRC2,TEC,VIS,VIS2
M8340101^2801%&	2,800		C,H,K,M,V	B, D, F	A, B	DAL,IRC2,TEC,VIS,VIS2
M8340101^2841%&	2,840		C,H,K,M,V	B, D	A, B	DAL,IRC2,TEC,VIS,VIS2
M8340101^2871%&	2,870	Link at Top	C,H,K,M,V	B, D, F	A, B	DAL,IRC2,TEC,VIS,VIS2
M8340101^2911%&	2,910		C,H,K,M,V	B, D	A, B	DAL,IRC2,TEC,VIS,VIS2
M8340101^2941%&	2,940		C,H,K,M,V	B, D, F	A, B	DAL,IRC2,TEC,VIS,VIS2
M8340101^2981%&	2,980		C,H,K,M,V	B, D	A, B	DAL,IRC2,TEC,VIS,VIS2
M8340101^3001%&	3,000		C,H,K,M,V	G, J	A, B	DAL,IRC2,TEC,VIS,VIS2
M8340101^3011%&	3,010	Link at Top	C,H,K,M,V	B, D, F	A, B	DAL,IRC2,TEC,VIS,VIS2
M8340101^3051%&	3,050		C,H,K,M,V	B, D	A, B	DAL,IRC2,TEC,VIS,VIS2
M8340101^3091%&	3,090		C,H,K,M,V	B, D, F	A, B	DAL,IRC2,TEC,VIS,VIS2
M8340101^3121%&	3,120		C,H,K,M,V	B, D	A, B	DAL,IRC2,TEC,VIS,VIS2
M8340101^3161%&	3,160		C,H,K,M,V	B, D, F	A, B	DAL,IRC2,TEC,VIS,VIS2
M8340101^3201%&	3,200	Link at Top	C,H,K,M,V	B, D	A, B	DAL,IRC2,TEC,VIS,VIS2
M8340101^3241%&	3,240		C,H,K,M,V	B, D, F	A, B	DAL,IRC2,TEC,VIS,VIS2
M8340101^3281%&	3,280		C,H,K,M,V	B, D	A, B	DAL,IRC2,TEC,VIS,VIS2

M8340101^3301%&	3,300		C,H,K,M,V	G, J	A, B	DAL,IRC2,TEC,VIS,VIS2
M8340101^3321%&	3,320		C,H,K,M,V	B, D, F	A, B	DAL,IRC2,TEC,VIS,VIS2
M8340101^3361%&	3,360	Link at Top	C,H,K,M,V	B, D	A, B	DAL,IRC2,TEC,VIS,VIS2
M8340101^3401%&	3,400		C,H,K,M,V	B, D, F	A, B	DAL,IRC2,TEC,VIS,VIS2
M8340101^3441%&	3,440		C,H,K,M,V	B, D	A, B	DAL,IRC2,TEC,VIS,VIS2
M8340101^3481%&	3,480		C,H,K,M,V	B, D, F	A, B	DAL,IRC2,TEC,VIS,VIS2
M8340101^3521%&	3,520		C,H,K,M,V	B, D	A, B	DAL,IRC2,TEC,VIS,VIS2
M8340101^3571%&	3,570	Link at Top	C,H,K,M,V	B, D, F	A, B	DAL,IRC2,TEC,VIS,VIS2
M8340101^3601%&	3,600		C,H,K,M,V	G, J	A, B	DAL,IRC2,TEC,VIS,VIS2
M8340101^3611%&	3,610		C,H,K,M,V	B, D	A, B	DAL,IRC2,TEC,VIS,VIS2
M8340101^3651%&	3,650		C,H,K,M,V	B, D, F	A, B	DAL,IRC2,TEC,VIS,VIS2
M8340101^3701%&	3,700		C,H,K,M,V	B, D	A, B	DAL,IRC2,TEC,VIS,VIS2
M8340101^3741%&	3,740	Link at Top	C,H,K,M,V	B, D, F	A, B	DAL,IRC2,TEC,VIS,VIS2
M8340101^3791%&	3,790		C,H,K,M,V	B, D	A, B	DAL,IRC2,TEC,VIS,VIS2
M8340101^3831%&	3,830		C,H,K,M,V	B, D, F	A, B	DAL,IRC2,TEC,VIS,VIS2
M8340101^3881%&	3,880		C,H,K,M,V	B, D	A, B	DAL,IRC2,TEC,VIS,VIS2
M8340101^3901%&	3,900		C,H,K,M,V	G, J	A, B	DAL,IRC2,TEC,VIS,VIS2
M8340101^3921%&	3,920	Link at Top	C,H,K,M,V	B, D, F	A, B	DAL,IRC2,TEC,VIS,VIS2
M8340101^3971%&	3,970		C,H,K,M,V	B, D	A, B	DAL,IRC2,TEC,VIS,VIS2
M8340101^4021%&	4,020		C,H,K,M,V	B, D, F	A, B	DAL,IRC2,TEC,VIS,VIS2
M8340101^4071%&	4,070		C,H,K,M,V	B, D	A, B	DAL,IRC2,TEC,VIS,VIS2
M8340101^4121%&	4,120		C,H,K,M,V	B, D, F	A, B	DAL,IRC2,TEC,VIS,VIS2
M8340101^4171%&	4,170	Link at Top	C,H,K,M,V	B, D	A, B	DAL,IRC2,TEC,VIS,VIS2
M8340101^4221%&	4,220		C,H,K,M,V	B, D, F	A, B	DAL,IRC2,TEC,VIS,VIS2
M8340101^4271%&	4,270		C,H,K,M,V	B, D	A, B	DAL,IRC2,TEC,VIS,VIS2
M8340101^4301%&	4,300		C,H,K,M,V	G, J	A, B	DAL,IRC2,TEC,VIS,VIS2
M8340101^4321%&	4,320		C,H,K,M,V	B, D, F	A, B	DAL,IRC2,TEC,VIS,VIS2
M8340101^4371%&	4,370	Link at Top	C,H,K,M,V	B, D	A, B	DAL,IRC2,TEC,VIS,VIS2
M8340101^4421%&	4,420		C,H,K,M,V	B, D, F	A, B	DAL,IRC2,TEC,VIS,VIS2
M8340101^4481%&	4,480		C,H,K,M,V	B, D	A, B	DAL,IRC2,TEC,VIS,VIS2
M8340101^4531%&	4,530		C,H,K,M,V	B, D, F	A, B	DAL,IRC2,TEC,VIS,VIS2
M8340101^4591%&	4,590		C,H,K,M,V	B, D	A, B	DAL,IRC2,TEC,VIS,VIS2
M8340101^4641%&	4,640	Link at Top	C,H,K,M,V	B, D, F	A, B	DAL,IRC2,TEC,VIS,VIS2
M8340101^4701%&	4,700		C,H,K,M,V	B, D, G, J	A, B	DAL,IRC2,TEC,VIS,VIS2
M8340101^4751%&	4,750		C,H,K,M,V	B, D, F	A, B	DAL,IRC2,TEC,VIS,VIS2
M8340101^4811%&	4,810		C,H,K,M,V	B, D	A, B	DAL,IRC2,TEC,VIS,VIS2
M8340101^4871%&	4,870		C,H,K,M,V	B, D, F	A, B	DAL,IRC2,TEC,VIS,VIS2
M8340101^4931%&	4,930	Link at Top	C,H,K,M,V	B, D	A, B	DAL,IRC2,TEC,VIS,VIS2
M8340101^4991%&	4,990		C,H,K,M,V	B, D, F	A, B	DAL,IRC2,TEC,VIS,VIS2
M8340101^5051%&	5,050		C,H,K,M,V	B, D	A, B	DAL,IRC2,TEC,VIS,VIS2
M8340101^5101%&	5,100		C,H,K,M,V	G, J	A, B	DAL,IRC2,TEC,VIS,VIS2
M8340101^5111%&	5,110		C,H,K,M,V	B, D, F	A, B	DAL,IRC2,TEC,VIS,VIS2
M8340101^5171%&	5,170	Link at Top	C,H,K,M,V	B, D	A, B	DAL,IRC2,TEC,VIS,VIS2
M8340101^5231%&	5,230		C,H,K,M,V	B, D, F	A, B	DAL,IRC2,TEC,VIS,VIS2
M8340101^5301%&	5,300		C,H,K,M,V	B, D	A, B	DAL,IRC2,TEC,VIS,VIS2
M8340101^5361%&	5,360		C,H,K,M,V	B, D, F	A, B	DAL,IRC2,TEC,VIS,VIS2
M8340101^5421%&	5,420		C,H,K,M,V	B, D	A, B	DAL,IRC2,TEC,VIS,VIS2

M8340101^5491%&	5,490	Link at Top	C,H,K,M,V	B, D, F	A, B	DAL,IRC2,TEC,VIS,VIS2
M8340101^5561%&	5,560		C,H,K,M,V	B, D	A, B	DAL,IRC2,TEC,VIS,VIS2
M8340101^5601%&	5,600		C,H,K,M,V	G, J	A, B	DAL,IRC2,TEC,VIS,VIS2
M8340101^5621%&	5,620		C,H,K,M,V	B, D, F	A, B	DAL,IRC2,TEC,VIS,VIS2
M8340101^5691%&	5,690		C,H,K,M,V	B, D	A, B	DAL,IRC2,TEC,VIS,VIS2
M8340101^5761%&	5,760	Link at Top	C,H,K,M,V	B, D, F	A, B	DAL,IRC2,TEC,VIS,VIS2
M8340101^5831%&	5,830		C,H,K,M,V	B, D	A, B	DAL,IRC2,TEC,VIS,VIS2
M8340101^5901%&	5,900		C,H,K,M,V	B, D, F	A, B	DAL,IRC2,TEC,VIS,VIS2
M8340101^5971%&	5,970		C,H,K,M,V	B, D	A, B	DAL,IRC2,TEC,VIS,VIS2
M8340101^6041%&	6,040		C,H,K,M,V	B, D, F	A, B	DAL,IRC2,TEC,VIS,VIS2
M8340101^6121%&	6,120	Link at Top	C,H,K,M,V	B, D	A, B	DAL,IRC2,TEC,VIS,VIS2
M8340101^6191%&	6,190		C,H,K,M,V	B, D, F	A, B	DAL,IRC2,TEC,VIS,VIS2
M8340101^6201%&	6,200		C,H,K,M,V	G, J	A, B	DAL,IRC2,TEC,VIS,VIS2
M8340101^6261%&	6,260		C,H,K,M,V	B, D	A, B	DAL,IRC2,TEC,VIS,VIS2
M8340101^6341%&	6,340		C,H,K,M,V	B, D, F	A, B	DAL,IRC2,TEC,VIS,VIS2
M8340101^6421%&	6,420	Link at Top	C,H,K,M,V	B, D	A, B	DAL,IRC2,TEC,VIS,VIS2
M8340101^6491%&	6,490		C,H,K,M,V	B, D, F	A, B	DAL,IRC2,TEC,VIS,VIS2
M8340101^6571%&	6,570		C,H,K,M,V	B, D	A, B	DAL,IRC2,TEC,VIS,VIS2
M8340101^6651%&	6,650		C,H,K,M,V	B, D, F	A, B	DAL,IRC2,TEC,VIS,VIS2
M8340101^6731%&	6,730		C,H,K,M,V	B, D	A, B	DAL,IRC2,TEC,VIS,VIS2
M8340101^6801%&	6,800	Link at Top	C,H,K,M,V	G, J	A, B	DAL,IRC2,TEC,VIS,VIS2
M8340101^6811%&	6,810		C,H,K,M,V	B, D, F	A, B	DAL,IRC2,TEC,VIS,VIS2
M8340101^6901%&	6,900		C,H,K,M,V	B, D	A, B	DAL,IRC2,TEC,VIS,VIS2
M8340101^6981%&	6,980		C,H,K,M,V	B, D, F	A, B	DAL,IRC2,TEC,VIS,VIS2
M8340101^7061%&	7,060		C,H,K,M,V	B, D	A, B	DAL,IRC2,TEC,VIS,VIS2
M8340101^7151%&	7,150	Link at Top	C,H,K,M,V	B, D, F	A, B	DAL,IRC2,TEC,VIS,VIS2
M8340101^7231%&	7,230		C,H,K,M,V	B, D	A, B	DAL,IRC2,TEC,VIS,VIS2
M8340101^7321%&	7,320		C,H,K,M,V	B, D, F	A, B	DAL,IRC2,TEC,VIS,VIS2
M8340101^7411%&	7,410		C,H,K,M,V	B, D	A, B	DAL,IRC2,TEC,VIS,VIS2
M8340101^7501%&	7,500		C,H,K,M,V	B, D, F, G, J	A, B	DAL,IRC2,TEC,VIS,VIS2
M8340101^7591%&	7,590	Link at Top	C,H,K,M,V	B, D	A, B	DAL,IRC2,TEC,VIS,VIS2
M8340101^7681%&	7,680		C,H,K,M,V	B, D, F	A, B	DAL,IRC2,TEC,VIS,VIS2
M8340101^7771%&	7,770		C,H,K,M,V	B, D	A, B	DAL,IRC2,TEC,VIS,VIS2
M8340101^7871%&	7,870		C,H,K,M,V	B, D, F	A, B	DAL,IRC2,TEC,VIS,VIS2
M8340101^7961%&	7,960		C,H,K,M,V	B, D	A, B	DAL,IRC2,TEC,VIS,VIS2
M8340101^8061%&	8,060	Link at Top	C,H,K,M,V	B, D, F	A, B	DAL,IRC2,TEC,VIS,VIS2
M8340101^8161%&	8,160		C,H,K,M,V	B, D	A, B	DAL,IRC2,TEC,VIS,VIS2
M8340101^8201%&	8,200		C,H,K,M,V	G, J	A, B	DAL,IRC2,TEC,VIS,VIS2
M8340101^8251%&	8,250		C,H,K,M,V	B, D, F	A, B	DAL,IRC2,TEC,VIS,VIS2
M8340101^8351%&	8,350		C,H,K,M,V	B, D	A, B	DAL,IRC2,TEC,VIS,VIS2
M8340101^8451%&	8,450	Link at Top	C,H,K,M,V	B, D, F	A, B	DAL,IRC2,TEC,VIS,VIS2
M8340101^8561%&	8,560		C,H,K,M,V	B, D	A, B	DAL,IRC2,TEC,VIS,VIS2
M8340101^8661%&	8,660		C,H,K,M,V	B, D, F	A, B	DAL,IRC2,TEC,VIS,VIS2
M8340101^8761%&	8,760		C,H,K,M,V	B, D	A, B	DAL,IRC2,TEC,VIS,VIS2
M8340101^8871%&	8,870		C,H,K,M,V	B, D, F	A, B	DAL,IRC2,TEC,VIS,VIS2
M8340101^8981%&	8,980	Link at Top	C,H,K,M,V	B, D	A, B	DAL,IRC2,TEC,VIS,VIS2
M8340101^9091%&	9,090		C,H,K,M,V	B, D, F	A, B	DAL,IRC2,TEC,VIS,VIS2

M8340101^9101%&	9,100		C,H,K,M,V	G, J	A, B	DAL,IRC2,TEC,VIS,VIS2
M8340101^9201%&	9,200		C,H,K,M,V	B, D	A, B	DAL,IRC2,TEC,VIS,VIS2
M8340101^9311%&	9,310		C,H,K,M,V	B, D, F	A, B	DAL,IRC2,TEC,VIS,VIS2
M8340101^9421%&	9,420	Link at Top	C,H,K,M,V	B, D	A, B	DAL,IRC2,TEC,VIS,VIS2
M8340101^9531%&	9,530		C,H,K,M,V	B, D, F	A, B	DAL,IRC2,TEC,VIS,VIS2
M8340101^9651%&	9,650		C,H,K,M,V	B, D	A, B	DAL,IRC2,TEC,VIS,VIS2
M8340101^9761%&	9,760		C,H,K,M,V	B, D, F	A, B	DAL,IRC2,TEC,VIS,VIS2
M8340101^9881%&	9,880		C,H,K,M,V	B, D	A, B	DAL,IRC2,TEC,VIS,VIS2
M8340101^1002%&	10,000	Link at Top	C,H,K,M,V	B, D, F, G, J	A, B	DAL,IRC2,TEC,VIS,VIS2
M8340101^1012%&	10,100		C,H,K,M,V	B, D	A, B	DAL,IRC2,TEC
M8340101^1022%&	10,200		C,H,K,M,V	B, D, F	A, B	DAL,IRC2,TEC
M8340101^1042%&	10,400		C,H,K,M,V	B, D	A, B	DAL,IRC2,TEC
M8340101^1052%&	10,500		C,H,K,M,V	B, D, F	A, B	DAL,IRC2,TEC
M8340101^1062%&	10,600	Link at Top	C,H,K,M,V	B, D	A, B	DAL,IRC2,TEC
M8340101^1072%&	10,700		C,H,K,M,V	B, D, F	A, B	DAL,IRC2,TEC
M8340101^1092%&	10,900		C,H,K,M,V	B, D	A, B	DAL,IRC2,TEC
M8340101^1102%&	11,000		C,H,K,M,V	B, D, F, G, J	A, B	DAL,IRC2,TEC
M8340101^1112%&	11,100		C,H,K,M,V	B, D	A, B	DAL,IRC2,TEC
M8340101^1132%&	11,300	Link at Top	C,H,K,M,V	B, D, F	A, B	DAL,IRC2,TEC
M8340101^1142%&	11,400		C,H,K,M,V	B, D	A, B	DAL,IRC2,TEC
M8340101^1152%&	11,500		C,H,K,M,V	B, D, F	A, B	DAL,IRC2,TEC
M8340101^1172%&	11,700		C,H,K,M,V	B, D	A, B	DAL,IRC2,TEC
M8340101^1182%&	11,800		C,H,K,M,V	B, D, F	A, B	DAL,IRC2,TEC
M8340101^1202%&	12,000	Link at Top	C,H,K,M,V	B, D, F, G, J	A, B	DAL,IRC2,TEC
M8340101^1212%&	12,100		C,H,K,M,V	B, D, F	A, B	DAL,IRC2,TEC
M8340101^1232%&	12,300		C,H,K,M,V	B, D	A, B	DAL,IRC2,TEC
M8340101^1242%&	12,400		C,H,K,M,V	B, D, F	A, B	DAL,IRC2,TEC
M8340101^1262%&	12,600		C,H,K,M,V	B, D	A, B	DAL,IRC2,TEC
M8340101^1272%&	12,700	Link at Top	C,H,K,M,V	B, D, F	A, B	DAL,IRC2,TEC
M8340101^1292%&	12,900		C,H,K,M,V	B, D	A, B	DAL,IRC2,TEC
M8340101^1302%&	13,000		C,H,K,M,V	B, D, F, G, J	A, B	DAL,IRC2,TEC
M8340101^1322%&	13,200		C,H,K,M,V	B, D	A, B	DAL,IRC2,TEC
M8340101^1332%&	13,300		C,H,K,M,V	B, D, F	A, B	DAL,IRC2,TEC
M8340101^1352%&	13,500	Link at Top	C,H,K,M,V	B, D	A, B	DAL,IRC2,TEC
M8340101^1372%&	13,700		C,H,K,M,V	B, D, F	A, B	DAL,IRC2,TEC
M8340101^1382%&	13,800		C,H,K,M,V	B, D	A, B	DAL,IRC2,TEC
M8340101^1402%&	14,000		C,H,K,M,V	B, D, F	A, B	DAL,IRC2,TEC
M8340101^1422%&	14,200		C,H,K,M,V	B, D	A, B	DAL,IRC2,TEC
M8340101^1432%&	14,300	Link at Top	C,H,K,M,V	B, D, F	A, B	DAL,IRC2,TEC
M8340101^1452%&	14,500		C,H,K,M,V	B, D	A, B	DAL,IRC2,TEC
M8340101^1472%&	14,700		C,H,K,M,V	B, D, F	A, B	DAL,IRC2,TEC
M8340101^1492%&	14,900		C,H,K,M,V	B, D	A, B	DAL,IRC2,TEC
M8340101^1502%&	15,000		C,H,K,M,V	B, D, F, G, J	A, B	DAL,IRC2,TEC
M8340101^1522%&	15,200	Link at Top	C,H,K,M,V	B, D	A, B	DAL,IRC2,TEC
M8340101^1542%&	15,400		C,H,K,M,V	B, D, F	A, B	DAL,IRC2,TEC
M8340101^1562%&	15,600		C,H,K,M,V	B, D	A, B	DAL,IRC2,TEC
M8340101^1582%&	15,800		C,H,K,M,V	B, D, F	A, B	DAL,IRC2,TEC

M8340101^1602%&	16,000		C,H,K,M,V	B, D, G, J	A, B	DAL,IRC2,TEC
M8340101^1622%&	16,200	Link at Top	C,H,K,M,V	B, D, F	A, B	DAL,IRC2,TEC
M8340101^1642%&	16,400		C,H,K,M,V	B, D	A, B	DAL,IRC2,TEC
M8340101^1652%&	16,500		C,H,K,M,V	B, D, F	A, B	DAL,IRC2,TEC
M8340101^1672%&	16,700		C,H,K,M,V	B, D	A, B	DAL,IRC2,TEC
M8340101^1692%&	16,900		C,H,K,M,V	B, D, F	A, B	DAL,IRC2,TEC
M8340101^1722%&	17,200	Link at Top	C,H,K,M,V	B, D	A, B	DAL,IRC2,TEC
M8340101^1742%&	17,400		C,H,K,M,V	B, D, F	A, B	DAL,IRC2,TEC
M8340101^1762%&	17,600		C,H,K,M,V	B, D	A, B	DAL,IRC2,TEC
M8340101^1782%&	17,800		C,H,K,M,V	B, D, F	A, B	DAL,IRC2,TEC
M8340101^1802%&	18,000		C,H,K,M,V	B, D, G, J	A, B	DAL,IRC2,TEC
M8340101^1822%&	18,200	Link at Top	C,H,K,M,V	B, D, F	A, B	DAL,IRC2,TEC
M8340101^1842%&	18,400		C,H,K,M,V	B, D	A, B	DAL,IRC2,TEC
M8340101^1872%&	18,700		C,H,K,M,V	B, D, F	A, B	DAL,IRC2,TEC
M8340101^1892%&	18,900		C,H,K,M,V	B, D	A, B	DAL,IRC2,TEC
M8340101^1912%&	19,100		C,H,K,M,V	B, D, F	A, B	DAL,IRC2,TEC
M8340101^1932%&	19,300	Link at Top	C,H,K,M,V	B, D	A, B	DAL,IRC2,TEC
M8340101^1962%&	19,600		C,H,K,M,V	B, D, F	A, B	DAL,IRC2,TEC
M8340101^1982%&	19,800		C,H,K,M,V	B, D	A, B	DAL,IRC2,TEC
M8340101^2002%&	20,000		C,H,K,M,V	B, D, F, G, J	A, B	DAL,IRC2,TEC
M8340101^2032%&	20,300		C,H,K,M,V	B, D	A, B	DAL,IRC2,TEC
M8340101^2052%&	20,500	Link at Top	C,H,K,M,V	B, D, F	A, B	DAL,IRC2,TEC
M8340101^2082%&	20,800		C,H,K,M,V	B, D	A, B	DAL,IRC2,TEC
M8340101^2102%&	21,000		C,H,K,M,V	B, D, F	A, B	DAL,IRC2,TEC
M8340101^2132%&	21,300		C,H,K,M,V	B, D	A, B	DAL,IRC2,TEC
M8340101^2152%&	21,500		C,H,K,M,V	B, D, F	A, B	DAL,IRC2,TEC
M8340101^2182%&	21,800	Link at Top	C,H,K,M,V	B, D	A, B	DAL,IRC2,TEC
M8340101^2202%&	22,000		C,H,K,M,V	G, J	A, B	DAL,IRC2,TEC
M8340101^2212%&	22,100		C,H,K,M,V	B, D, F	A, B	DAL,IRC2,TEC
M8340101^2232%&	22,300		C,H,K,M,V	B, D	A, B	DAL,IRC2,TEC
M8340101^2262%&	22,600		C,H,K,M,V	B, D, F	A, B	DAL,IRC2,TEC
M8340101^2292%&	22,900	Link at Top	C,H,K,M,V	B, D	A, B	DAL,IRC2,TEC
M8340101^2322%&	23,200		C,H,K,M,V	B, D, F	A, B	DAL,IRC2,TEC
M8340101^2342%&	23,400		C,H,K,M,V	B, D	A, B	DAL,IRC2,TEC
M8340101^2372%&	23,700		C,H,K,M,V	B, D, F	A, B	DAL,IRC2,TEC
M8340101^2402%&	24,000		C,H,K,M,V	B, D, F, G, J	A, B	DAL,IRC2,TEC
M8340101^2432%&	24,300	Link at Top	C,H,K,M,V	B, D, F	A, B	DAL,IRC2,TEC
M8340101^2462%&	24,600		C,H,K,M,V	B, D	A, B	DAL,IRC2,TEC
M8340101^2492%&	24,900		C,H,K,M,V	B, D, F	A, B	DAL,IRC2,TEC
M8340101^2522%&	25,200		C,H,K,M,V	B, D	A, B	DAL,IRC2,TEC
M8340101^2552%&	25,500		C,H,K,M,V	B, D, F	A, B	DAL,IRC2,TEC
M8340101^2582%&	25,800	Link at Top	C,H,K,M,V	B, D	A, B	DAL,IRC2,TEC
M8340101^2612%&	26,100		C,H,K,M,V	B, D, F	A, B	DAL,IRC2,TEC
M8340101^2642%&	26,400		C,H,K,M,V	B, D	A, B	DAL,IRC2,TEC
M8340101^2672%&	26,700		C,H,K,M,V	B, D, F	A, B	DAL,IRC2,TEC
M8340101^2702%&	27,000		C,H,K,M,V	G, J	A, B	DAL,IRC2,TEC
M8340101^2712%&	27,100	Link at Top	C,H,K,M,V	B, D	A, B	DAL,IRC2,TEC

M8340101^2742%&	27,400		C,H,K,M,V	B, D, F	A, B	DAL,IRC2,TEC
M8340101^2772%&	27,700		C,H,K,M,V	B, D	A, B	DAL,IRC2,TEC
M8340101^2802%&	28,000		C,H,K,M,V	B, D, F	A, B	DAL,IRC2,TEC
M8340101^2842%&	28,400		C,H,K,M,V	B, D	A, B	DAL,IRC2,TEC
M8340101^2872%&	28,700	Link at Top	C,H,K,M,V	B, D, F	A, B	DAL,IRC2,TEC
M8340101^2912%&	29,100		C,H,K,M,V	B, D	A, B	DAL,IRC2,TEC
M8340101^2942%&	29,400		C,H,K,M,V	B, D, F	A, B	DAL,IRC2,TEC
M8340101^2982%&	29,800		C,H,K,M,V	B, D	A, B	DAL,IRC2,TEC
M8340101^3002%&	30,000		C,H,K,M,V	G, J	A, B	DAL,IRC2,TEC
M8340101^3012%&	30,100	Link at Top	C,H,K,M,V	B, D, F	A, B	DAL,IRC2,TEC
M8340101^3052%&	30,500		C,H,K,M,V	B, D	A, B	DAL,IRC2,TEC
M8340101^3092%&	30,900		C,H,K,M,V	B, D, F	A, B	DAL,IRC2,TEC
M8340101^3122%&	31,200		C,H,K,M,V	B, D	A, B	DAL,IRC2,TEC
M8340101^3162%&	31,600		C,H,K,M,V	B, D, F	A, B	DAL,IRC2,TEC
M8340101^3202%&	32,000	Link at Top	C,H,K,M,V	B, D	A, B	DAL,IRC2,TEC
M8340101^3242%&	32,400		C,H,K,M,V	B, D, F	A, B	DAL,IRC2,TEC
M8340101^3282%&	32,800		C,H,K,M,V	B, D	A, B	DAL,IRC2,TEC
M8340101^3302%&	33,000		C,H,K,M,V	G, J	A, B	DAL,IRC2,TEC
M8340101^3322%&	33,200		C,H,K,M,V	B, D, F	A, B	DAL,IRC2,TEC
M8340101^3362%&	33,600	Link at Top	C,H,K,M,V	B, D	A, B	DAL,IRC2,TEC
M8340101^3402%&	34,000		C,H,K,M,V	B, D, F	A, B	DAL,IRC2,TEC
M8340101^3442%&	34,400		C,H,K,M,V	B, D	A, B	DAL,IRC2,TEC
M8340101^3482%&	34,800		C,H,K,M,V	B, D, F	A, B	DAL,IRC2,TEC
M8340101^3522%&	35,200		C,H,K,M,V	B, D	A, B	DAL,IRC2,TEC
M8340101^3572%&	35,700	Link at Top	C,H,K,M,V	B, D, F	A, B	DAL,IRC2,TEC
M8340101^3602%&	36,000		C,H,K,M,V	G, J	A, B	DAL,IRC2,TEC
M8340101^3612%&	36,100		C,H,K,M,V	B, D	A, B	DAL,IRC2,TEC
M8340101^3652%&	36,500		C,H,K,M,V	B, D, F	A, B	DAL,IRC2,TEC
M8340101^3702%&	37,000		C,H,K,M,V	B, D	A, B	DAL,IRC2,TEC
M8340101^3742%&	37,400	Link at Top	C,H,K,M,V	B, D, F	A, B	DAL,IRC2,TEC
M8340101^3792%&	37,900		C,H,K,M,V	B, D	A, B	DAL,IRC2,TEC
M8340101^3832%&	38,300		C,H,K,M,V	B, D, F	A, B	DAL,IRC2,TEC
M8340101^3882%&	38,800		C,H,K,M,V	B, D	A, B	DAL,IRC2,TEC
M8340101^3902%&	39,000		C,H,K,M,V	G, J	A, B	DAL,IRC2,TEC
M8340101^3922%&	39,200	Link at Top	C,H,K,M,V	B, D, F	A, B	DAL,IRC2,TEC
M8340101^3972%&	39,700		C,H,K,M,V	B, D	A, B	DAL,IRC2,TEC
M8340101^4022%&	40,200		C,H,K,M,V	B, D, F	A, B	DAL,IRC2,TEC
M8340101^4072%&	40,700		C,H,K,M,V	B, D	A, B	DAL,IRC2,TEC
M8340101^4122%&	41,200		C,H,K,M,V	B, D, F	A, B	DAL,IRC2,TEC
M8340101^4172%&	41,700	Link at Top	C,H,K,M,V	B, D	A, B	DAL,IRC2,TEC
M8340101^4222%&	42,200		C,H,K,M,V	B, D, F	A, B	DAL,IRC2,TEC
M8340101^4272%&	42,700		C,H,K,M,V	B, D	A, B	DAL,IRC2,TEC
M8340101^4302%&	43,000		C,H,K,M,V	G, J	A, B	DAL,IRC2,TEC
M8340101^4322%&	43,200		C,H,K,M,V	B, D, F	A, B	DAL,IRC2,TEC
M8340101^4372%&	43,700	Link at Top	C,H,K,M,V	B, D	A, B	DAL,IRC2,TEC
M8340101^4422%&	44,200		C,H,K,M,V	B, D, F	A, B	DAL,IRC2,TEC
M8340101^4482%&	44,800		C,H,K,M,V	B, D	A, B	DAL,IRC2,TEC

M8340101^4532%&	45,300		C,H,K,M,V	B, D, F	A, B	DAL,IRC2,TEC
M8340101^4592%&	45,900		C,H,K,M,V	B, D	A, B	DAL,IRC2,TEC
M8340101^4642%&	46,400	Link at Top	C,H,K,M,V	B, D, F	A, B	DAL,IRC2,TEC
M8340101^4702%&	47,000		C,H,K,M,V	B, D, G, J	A, B	DAL,IRC2,TEC
M8340101^4752%&	47,500		C,H,K,M,V	B, D, F	A, B	DAL,IRC2,TEC
M8340101^4812%&	48,100		C,H,K,M,V	B, D	A, B	DAL,IRC2,TEC
M8340101^4872%&	48,700		C,H,K,M,V	B, D, F	A, B	DAL,IRC2,TEC
M8340101^4932%&	49,300	Link at Top	C,H,K,M,V	B, D	A, B	DAL,IRC2,TEC
M8340101^4992%&	49,900		C,H,K,M,V	B, D, F	A, B	DAL,IRC2,TEC
M8340101^5052%&	50,500		C,H,K,M,V	B, D	A, B	DAL,IRC2,TEC
M8340101^5102%&	51,000		C,H,K,M,V	G, J	A, B	DAL,IRC2,TEC
M8340101^5112%&	51,100		C,H,K,M,V	B, D, F	A, B	DAL,IRC2,TEC
M8340101^5172%&	51,700	Link at Top	C,H,K,M,V	B, D	A, B	DAL,IRC2,TEC
M8340101^5232%&	52,300		C,H,K,M,V	B, D, F	A, B	DAL,IRC2,TEC
M8340101^5302%&	53,000		C,H,K,M,V	B, D	A, B	DAL,IRC2,TEC
M8340101^5362%&	53,600		C,H,K,M,V	B, D, F	A, B	DAL,IRC2,TEC
M8340101^5422%&	54,200		C,H,K,M,V	B, D	A, B	DAL,IRC2,TEC
M8340101^5492%&	54,900	Link at Top	C,H,K,M,V	B, D, F	A, B	DAL,IRC2,TEC
M8340101^5562%&	55,600		C,H,K,M,V	B, D	A, B	DAL,IRC2,TEC
M8340101^5602%&	56,000		C,H,K,M,V	G, J	A, B	DAL,IRC2,TEC
M8340101^5622%&	56,200		C,H,K,M,V	B, D, F	A, B	DAL,IRC2,TEC
M8340101^5692%&	56,900		C,H,K,M,V	B, D	A, B	DAL,IRC2,TEC
M8340101^5762%&	57,600	Link at Top	C,H,K,M,V	B, D, F	A, B	DAL,IRC2,TEC
M8340101^5832%&	58,300		C,H,K,M,V	B, D	A, B	DAL,IRC2,TEC
M8340101^5902%&	59,000		C,H,K,M,V	B, D, F	A, B	DAL,IRC2,TEC
M8340101^5972%&	59,700		C,H,K,M,V	B, D	A, B	DAL,IRC2,TEC
M8340101^6042%&	60,400		C,H,K,M,V	B, D, F	A, B	DAL,IRC2,TEC
M8340101^6122%&	61,200	Link at Top	C,H,K,M,V	B, D	A, B	DAL,IRC2,TEC
M8340101^6192%&	61,900		C,H,K,M,V	B, D, F	A, B	DAL,IRC2,TEC
M8340101^6202%&	62,000		C,H,K,M,V	G, J	A, B	DAL,IRC2,TEC
M8340101^6262%&	62,600		C,H,K,M,V	B, D	A, B	DAL,IRC2,TEC
M8340101^6342%&	63,400		C,H,K,M,V	B, D, F	A, B	DAL,IRC2,TEC
M8340101^6422%&	64,200	Link at Top	C,H,K,M,V	B, D	A, B	DAL,IRC2,TEC
M8340101^6492%&	64,900		C,H,K,M,V	B, D, F	A, B	DAL,IRC2,TEC
M8340101^6572%&	65,700		C,H,K,M,V	B, D	A, B	DAL,IRC2,TEC
M8340101^6652%&	66,500		C,H,K,M,V	B, D, F	A, B	DAL,IRC2,TEC
M8340101^6732%&	67,300		C,H,K,M,V	B, D	A, B	DAL,IRC2,TEC
M8340101^6802%&	68,000	Link at Top	C,H,K,M,V	G, J	A, B	DAL,IRC2,TEC
M8340101^6812%&	68,100		C,H,K,M,V	B, D, F	A, B	DAL,IRC2,TEC
M8340101^6902%&	69,000		C,H,K,M,V	B, D	A, B	DAL,IRC2,TEC
M8340101^6982%&	69,800		C,H,K,M,V	B, D, F	A, B	DAL,IRC2,TEC
M8340101^7062%&	70,600		C,H,K,M,V	B, D	A, B	DAL,IRC2,TEC
M8340101^7152%&	71,500	Link at Top	C,H,K,M,V	B, D, F	A, B	DAL,IRC2,TEC
M8340101^7232%&	72,300		C,H,K,M,V	B, D	A, B	DAL,IRC2,TEC
M8340101^7322%&	73,200		C,H,K,M,V	B, D, F	A, B	DAL,IRC2,TEC
M8340101^7412%&	74,100		C,H,K,M,V	B, D	A, B	DAL,IRC2,TEC
M8340101^7502%&	75,000		C,H,K,M,V	B, D, F, G, J	A, B	DAL,IRC2,TEC

M8340101^7592%&	75,900	Link at Top	C,H,K,M,V	B, D	A, B	DAL,IRC2,TEC
M8340101^7682%&	76,800		C,H,K,M,V	B, D, F	A, B	DAL,IRC2,TEC
M8340101^7772%&	77,700		C,H,K,M,V	B, D	A, B	DAL,IRC2,TEC
M8340101^7872%&	78,700		C,H,K,M,V	B, D, F	A, B	DAL,IRC2,TEC
M8340101^7962%&	79,600		C,H,K,M,V	B, D	A, B	DAL,IRC2,TEC
M8340101^8062%&	80,600	Link at Top	C,H,K,M,V	B, D, F	A, B	DAL,IRC2,TEC
M8340101^8162%&	81,600		C,H,K,M,V	B, D	A, B	DAL,IRC2,TEC
M8340101^8202%&	82,000		C,H,K,M,V	G, J	A, B	DAL,IRC2,TEC
M8340101^8252%&	82,500		C,H,K,M,V	B, D, F	A, B	DAL,IRC2,TEC
M8340101^8352%&	83,500		C,H,K,M,V	B, D	A, B	DAL,IRC2,TEC
M8340101^8452%&	84,500	Link at Top	C,H,K,M,V	B, D, F	A, B	DAL,IRC2,TEC
M8340101^8562%&	85,600		C,H,K,M,V	B, D	A, B	DAL,IRC2,TEC
M8340101^8662%&	86,600		C,H,K,M,V	B, D, F	A, B	DAL,IRC2,TEC
M8340101^8762%&	87,600		C,H,K,M,V	B, D	A, B	DAL,IRC2,TEC
M8340101^8872%&	88,700		C,H,K,M,V	B, D, F	A, B	DAL,IRC2,TEC
M8340101^8982%&	89,800	Link at Top	C,H,K,M,V	B, D	A, B	DAL,IRC2,TEC
M8340101^9092%&	90,900		C,H,K,M,V	B, D, F	A, B	DAL,IRC2,TEC
M8340101^9102%&	91,000		C,H,K,M,V	G, J	A, B	DAL,IRC2,TEC
M8340101^9202%&	92,000		C,H,K,M,V	B, D	A, B	DAL,IRC2,TEC
M8340101^9312%&	93,100		C,H,K,M,V	B, D, F	A, B	DAL,IRC2,TEC
M8340101^9422%&	94,200	Link at Top	C,H,K,M,V	B, D	A, B	DAL,IRC2,TEC
M8340101^9532%&	95,300		C,H,K,M,V	B, D, F	A, B	DAL,IRC2,TEC
M8340101^9652%&	96,500		C,H,K,M,V	B, D	A, B	DAL,IRC2,TEC
M8340101^9762%&	97,600		C,H,K,M,V	B, D, F	A, B	DAL,IRC2,TEC
M8340101^9882%&	98,800		C,H,K,M,V	B, D	A, B	DAL,IRC2,TEC
M8340101^1003%&	100,000	Link at Top	C,H,K,M,V	B, D, F, G, J	A, B	DAL,IRC2,TEC
M8340101^1013%&	101,000		C,H,K,M,V	B, D	A, B	DAL
M8340101^1023%&	102,000		C,H,K,M,V	B, D, F	A, B	DAL
M8340101^1043%&	104,000		C,H,K,M,V	B, D	A, B	DAL
M8340101^1053%&	105,000		C,H,K,M,V	B, D, F	A, B	DAL
M8340101^1063%&	106,000	Link at Top	C,H,K,M,V	B, D	A, B	DAL
M8340101^1073%&	107,000		C,H,K,M,V	B, D, F	A, B	DAL
M8340101^1093%&	109,000		C,H,K,M,V	B, D	A, B	DAL
M8340101^1103%&	110,000		C,H,K,M,V	B, D, F, G, J	A, B	DAL
M8340101^1113%&	111,000		C,H,K,M,V	B, D	A, B	DAL
M8340101^1133%&	113,000	Link at Top	C,H,K,M,V	B, D, F	A, B	DAL
M8340101^1143%&	114,000		C,H,K,M,V	B, D	A, B	DAL
M8340101^1153%&	115,000		C,H,K,M,V	B, D, F	A, B	DAL
M8340101^1173%&	117,000		C,H,K,M,V	B, D	A, B	DAL
M8340101^1183%&	118,000		C,H,K,M,V	B, D, F	A, B	DAL
M8340101^1203%&	120,000	Link at Top	C,H,K,M,V	B, D, F, G, J	A, B	DAL
M8340101^1213%&	121,000		C,H,K,M,V	B, D, F	A, B	DAL
M8340101^1233%&	123,000		C,H,K,M,V	B, D	A, B	DAL
M8340101^1243%&	124,000		C,H,K,M,V	B, D, F	A, B	DAL
M8340101^1263%&	126,000		C,H,K,M,V	B, D	A, B	DAL
M8340101^1273%&	127,000	Link at Top	C,H,K,M,V	B, D, F	A, B	DAL
M8340101^1293%&	129,000		C,H,K,M,V	B, D	A, B	DAL

M8340101^1303%&	130,000		C,H,K,M,V	B, D, F, G, J	A, B	DAL
M8340101^1323%&	132,000		C,H,K,M,V	B, D	A, B	DAL
M8340101^1333%&	133,000		C,H,K,M,V	B, D, F	A, B	DAL
M8340101^1353%&	135,000	Link at Top	C,H,K,M,V	B, D	A, B	DAL
M8340101^1373%&	137,000		C,H,K,M,V	B, D, F	A, B	DAL
M8340101^1383%&	138,000		C,H,K,M,V	B, D	A, B	DAL
M8340101^1403%&	140,000		C,H,K,M,V	B, D, F	A, B	DAL
M8340101^1423%&	142,000		C,H,K,M,V	B, D	A, B	DAL
M8340101^1433%&	143,000	Link at Top	C,H,K,M,V	B, D, F	A, B	DAL
M8340101^1453%&	145,000		C,H,K,M,V	B, D	A, B	DAL
M8340101^1473%&	147,000		C,H,K,M,V	B, D, F	A, B	DAL
M8340101^1493%&	149,000		C,H,K,M,V	B, D	A, B	DAL
M8340101^1503%&	150,000		C,H,K,M,V	B, D, F, G, J	A, B	DAL
M8340101^1523%&	152,000	Link at Top	C,H,K,M,V	B, D	A, B	DAL
M8340101^1543%&	154,000		C,H,K,M,V	B, D, F	A, B	DAL
M8340101^1563%&	156,000		C,H,K,M,V	B, D	A, B	DAL
M8340101^1583%&	158,000		C,H,K,M,V	B, D, F	A, B	DAL
M8340101^1603%&	160,000		C,H,K,M,V	B, D, G, J	A, B	DAL
M8340101^1623%&	162,000	Link at Top	C,H,K,M,V	B, D, F	A, B	DAL
M8340101^1643%&	164,000		C,H,K,M,V	B, D	A, B	DAL
M8340101^1653%&	165,000		C,H,K,M,V	B, D, F	A, B	DAL
M8340101^1673%&	167,000		C,H,K,M,V	B, D	A, B	DAL
M8340101^1693%&	169,000		C,H,K,M,V	B, D, F	A, B	DAL
M8340101^1723%&	172,000	Link at Top	C,H,K,M,V	B, D	A, B	DAL
M8340101^1743%&	174,000		C,H,K,M,V	B, D, F	A, B	DAL
M8340101^1763%&	176,000		C,H,K,M,V	B, D	A, B	DAL
M8340101^1783%&	178,000		C,H,K,M,V	B, D, F	A, B	DAL
M8340101^1803%&	180,000		C,H,K,M,V	B, D, G, J	A, B	DAL
M8340101^1823%&	182,000	Link at Top	C,H,K,M,V	B, D, F	A, B	DAL
M8340101^1843%&	184,000		C,H,K,M,V	B, D	A, B	DAL
M8340101^1873%&	187,000		C,H,K,M,V	B, D, F	A, B	DAL
M8340101^1893%&	189,000		C,H,K,M,V	B, D	A, B	DAL
M8340101^1913%&	191,000		C,H,K,M,V	B, D, F	A, B	DAL
M8340101^1933%&	193,000	Link at Top	C,H,K,M,V	B, D	A, B	DAL
M8340101^1963%&	196,000		C,H,K,M,V	B, D, F	A, B	DAL
M8340101^1983%&	198,000		C,H,K,M,V	B, D	A, B	DAL
M8340101^2003%&	200,000		C,H,K,M,V	B, D, F, G, J	A, B	DAL
M8340101^2033%&	203,000		C,H,K,M,V	B, D	A, B	DAL
M8340101^2053%&	205,000	Link at Top	C,H,K,M,V	B, D, F	A, B	DAL
M8340101^2083%&	208,000		C,H,K,M,V	B, D	A, B	DAL
M8340101^2103%&	210,000		C,H,K,M,V	B, D, F	A, B	DAL
M8340101^2133%&	213,000		C,H,K,M,V	B, D	A, B	DAL
M8340101^2153%&	215,000		C,H,K,M,V	B, D, F	A, B	DAL
M8340101^2183%&	218,000	Link at Top	C,H,K,M,V	B, D	A, B	DAL
M8340101^2203%&	220,000		C,H,K,M,V	G, J	A, B	DAL
M8340101^2213%&	221,000		C,H,K,M,V	B, D, F	A, B	DAL
M8340101^2233%&	223,000		C,H,K,M,V	B, D	A, B	DAL

M8340101^2263%&	226,000		C,H,K,M,V	B, D, F	A, B	DAL
M8340101^2293%&	229,000	Link at Top	C,H,K,M,V	B, D	A, B	DAL
M8340101^2323%&	232,000		C,H,K,M,V	B, D, F	A, B	DAL
M8340101^2343%&	234,000		C,H,K,M,V	B, D	A, B	DAL
M8340101^2373%&	237,000		C,H,K,M,V	B, D, F	A, B	DAL
M8340101^2403%&	240,000		C,H,K,M,V	B, D, F, G, J	A, B	DAL
M8340101^2433%&	243,000	Link at Top	C,H,K,M,V	B, D, F	A, B	DAL
M8340101^2463%&	246,000		C,H,K,M,V	B, D	A, B	DAL
M8340101^2493%&	249,000		C,H,K,M,V	B, D, F	A, B	DAL
M8340101^2523%&	252,000		C,H,K,M,V	B, D	A, B	DAL
M8340101^2553%&	255,000		C,H,K,M,V	B, D, F	A, B	DAL
M8340101^2583%&	258,000	Link at Top	C,H,K,M,V	B, D	A, B	DAL
M8340101^2613%&	261,000		C,H,K,M,V	B, D, F	A, B	DAL
M8340101^2643%&	264,000		C,H,K,M,V	B, D	A, B	DAL
M8340101^2673%&	267,000		C,H,K,M,V	B, D, F	A, B	DAL
M8340101^2703%&	270,000		C,H,K,M,V	G, J	A, B	DAL
M8340101^2713%&	271,000	Link at Top	C,H,K,M,V	B, D	A, B	DAL
M8340101^2743%&	274,000		C,H,K,M,V	B, D, F	A, B	DAL
M8340101^2773%&	277,000		C,H,K,M,V	B, D	A, B	DAL
M8340101^2803%&	280,000		C,H,K,M,V	B, D, F	A, B	DAL
M8340101^2843%&	284,000		C,H,K,M,V	B, D	A, B	DAL
M8340101^2873%&	287,000	Link at Top	C,H,K,M,V	B, D, F	A, B	DAL
M8340101^2913%&	291,000		C,H,K,M,V	B, D	A, B	DAL
M8340101^2943%&	294,000		C,H,K,M,V	B, D, F	A, B	DAL
M8340101^2983%&	298,000		C,H,K,M,V	B, D	A, B	DAL
M8340101^3003%&	300,000		C,H,K,M,V	G, J	A, B	DAL
M8340101^3013%&	301,000	Link at Top	C,H,K,M,V	B, D, F	A, B	DAL
M8340101^3053%&	305,000		C,H,K,M,V	B, D	A, B	DAL
M8340101^3093%&	309,000		C,H,K,M,V	B, D, F	A, B	DAL
M8340101^3123%&	312,000		C,H,K,M,V	B, D	A, B	DAL
M8340101^3163%&	316,000		C,H,K,M,V	B, D, F	A, B	DAL
M8340101^3203%&	320,000	Link at Top	C,H,K,M,V	B, D	A, B	DAL
M8340101^3243%&	324,000		C,H,K,M,V	B, D, F	A, B	DAL
M8340101^3283%&	328,000		C,H,K,M,V	B, D	A, B	DAL
M8340101^3303%&	330,000		C,H,K,M,V	G, J	A, B	DAL
M8340101^3323%&	332,000		C,H,K,M,V	B, D, F	A, B	DAL
M8340101^3363%&	336,000	Link at Top	C,H,K,M,V	B, D	A, B	DAL
M8340101^3403%&	340,000		C,H,K,M,V	B, D, F	A, B	DAL
M8340101^3443%&	344,000		C,H,K,M,V	B, D	A, B	DAL
M8340101^3483%&	348,000		C,H,K,M,V	B, D, F	A, B	DAL
M8340101^3523%&	352,000		C,H,K,M,V	B, D	A, B	DAL
M8340101^3573%&	357,000	Link at Top	C,H,K,M,V	B, D, F	A, B	DAL
M8340101^3603%&	360,000		C,H,K,M,V	G, J	A, B	DAL
M8340101^3613%&	361,000		C,H,K,M,V	B, D	A, B	DAL
M8340101^3653%&	365,000		C,H,K,M,V	B, D, F	A, B	DAL
M8340101^3703%&	370,000		C,H,K,M,V	B, D	A, B	DAL
M8340101^3743%&	374,000	Link at Top	C,H,K,M,V	B, D, F	A, B	DAL

M8340101^3793%&	379,000		C,H,K,M,V	B, D	A, B	DAL
M8340101^3833%&	383,000		C,H,K,M,V	B, D, F	A, B	DAL
M8340101^3883%&	388,000		C,H,K,M,V	B, D	A, B	DAL
M8340101^3903%&	390,000		C,H,K,M,V	G, J	A, B	DAL
M8340101^3923%&	392,000	Link at Top	C,H,K,M,V	B, D, F	A, B	DAL
M8340101^3973%&	397,000		C,H,K,M,V	B, D	A, B	DAL
M8340101^4023%&	402,000		C,H,K,M,V	B, D, F	A, B	DAL
M8340101^4073%&	407,000		C,H,K,M,V	B, D	A, B	DAL
M8340101^4123%&	412,000		C,H,K,M,V	B, D, F	A, B	DAL
M8340101^4173%&	417,000	Link at Top	C,H,K,M,V	B, D	A, B	DAL
M8340101^4223%&	422,000		C,H,K,M,V	B, D, F	A, B	DAL
M8340101^4273%&	427,000		C,H,K,M,V	B, D	A, B	DAL
M8340101^4303%&	430,000		C,H,K,M,V	G, J	A, B	DAL
M8340101^4323%&	432,000		C,H,K,M,V	B, D, F	A, B	DAL
M8340101^4373%&	437,000	Link at Top	C,H,K,M,V	B, D	A, B	DAL
M8340101^4423%&	442,000		C,H,K,M,V	B, D, F	A, B	DAL
M8340101^4483%&	448,000		C,H,K,M,V	B, D	A, B	DAL
M8340101^4533%&	453,000		C,H,K,M,V	B, D, F	A, B	DAL
M8340101^4593%&	459,000		C,H,K,M,V	B, D	A, B	DAL
M8340101^4643%&	464,000	Link at Top	C,H,K,M,V	B, D, F	A, B	DAL
M8340101^4703%&	470,000		C,H,K,M,V	B, D, G, J	A, B	DAL
M8340101^4753%&	475,000		C,H,K,M,V	B, D, F	A, B	DAL
M8340101^4813%&	481,000		C,H,K,M,V	B, D	A, B	DAL
M8340101^4873%&	487,000		C,H,K,M,V	B, D, F	A, B	DAL
M8340101^4933%&	493,000	Link at Top	C,H,K,M,V	B, D	A, B	DAL
M8340101^4993%&	499,000		C,H,K,M,V	B, D, F	A, B	DAL
M8340101^5053%&	505,000		C,H,K,M,V	B, D	A, B	DAL
M8340101^5103%&	510,000		C,H,K,M,V	G, J	A, B	DAL
M8340101^5113%&	511,000		C,H,K,M,V	B, D, F	A, B	DAL
M8340101^5173%&	517,000	Link at Top	C,H,K,M,V	B, D	A, B	DAL
M8340101^5233%&	523,000		C,H,K,M,V	B, D, F	A, B	DAL
M8340101^5303%&	530,000		C,H,K,M,V	B, D	A, B	DAL
M8340101^5363%&	536,000		C,H,K,M,V	B, D, F	A, B	DAL
M8340101^5423%&	542,000		C,H,K,M,V	B, D	A, B	DAL
M8340101^5493%&	549,000	Link at Top	C,H,K,M,V	B, D, F	A, B	DAL
M8340101^5563%&	556,000		C,H,K,M,V	B, D	A, B	DAL
M8340101^5603%&	560,000		C,H,K,M,V	G, J	A, B	DAL
M8340101^5623%&	562,000		C,H,K,M,V	B, D, F	A, B	DAL
M8340101^5693%&	569,000		C,H,K,M,V	B, D	A, B	DAL
M8340101^5763%&	576,000	Link at Top	C,H,K,M,V	B, D, F	A, B	DAL
M8340101^5833%&	583,000		C,H,K,M,V	B, D	A, B	DAL
M8340101^5903%&	590,000		C,H,K,M,V	B, D, F	A, B	DAL
M8340101^5973%&	597,000		C,H,K,M,V	B, D	A, B	DAL
M8340101^6043%&	604,000		C,H,K,M,V	B, D, F	A, B	DAL
M8340101^6123%&	612,000	Link at Top	C,H,K,M,V	B, D	A, B	DAL
M8340101^6193%&	619,000		C,H,K,M,V	B, D, F	A, B	DAL
M8340101^6203%&	620,000		C,H,K,M,V	G, J	A, B	DAL

M8340101^6263%&	626,000		C,H,K,M,V	B, D	A, B	DAL
M8340101^6343%&	634,000		C,H,K,M,V	B, D, F	A, B	DAL
M8340101^6423%&	642,000	Link at Top	C,H,K,M,V	B, D	A, B	DAL
M8340101^6493%&	649,000		C,H,K,M,V	B, D, F	A, B	DAL
M8340101^6573%&	657,000		C,H,K,M,V	B, D	A, B	DAL
M8340101^6653%&	665,000		C,H,K,M,V	B, D, F	A, B	DAL
M8340101^6733%&	673,000		C,H,K,M,V	B, D	A, B	DAL
M8340101^6803%&	680,000	Link at Top	C,H,K,M,V	G, J	A, B	DAL
M8340101^6813%&	681,000		C,H,K,M,V	B, D, F	A, B	DAL
M8340101^6903%&	690,000		C,H,K,M,V	B, D	A, B	DAL
M8340101^6983%&	698,000		C,H,K,M,V	B, D, F	A, B	DAL
M8340101^7063%&	706,000		C,H,K,M,V	B, D	A, B	DAL
M8340101^7153%&	715,000	Link at Top	C,H,K,M,V	B, D, F	A, B	DAL
M8340101^7233%&	723,000		C,H,K,M,V	B, D	A, B	DAL
M8340101^7323%&	732,000		C,H,K,M,V	B, D, F	A, B	DAL
M8340101^7413%&	741,000		C,H,K,M,V	B, D	A, B	DAL
M8340101^7503%&	750,000		C,H,K,M,V	B, D, F, G, J	A, B	DAL
M8340101^7593%&	759,000	Link at Top	C,H,K,M,V	B, D	A, B	DAL
M8340101^7683%&	768,000		C,H,K,M,V	B, D, F	A, B	DAL
M8340101^7773%&	777,000		C,H,K,M,V	B, D	A, B	DAL
M8340101^7873%&	787,000		C,H,K,M,V	B, D, F	A, B	DAL
M8340101^7963%&	796,000		C,H,K,M,V	B, D	A, B	DAL
M8340101^8063%&	806,000	Link at Top	C,H,K,M,V	B, D, F	A, B	DAL
M8340101^8163%&	816,000		C,H,K,M,V	B, D	A, B	DAL
M8340101^8203%&	820,000		C,H,K,M,V	G, J	A, B	DAL
M8340101^8253%&	825,000		C,H,K,M,V	B, D, F	A, B	DAL
M8340101^8353%&	835,000		C,H,K,M,V	B, D	A, B	DAL
M8340101^8453%&	845,000	Link at Top	C,H,K,M,V	B, D, F	A, B	DAL
M8340101^8563%&	856,000		C,H,K,M,V	B, D	A, B	DAL
M8340101^8663%&	866,000		C,H,K,M,V	B, D, F	A, B	DAL
M8340101^8763%&	876,000		C,H,K,M,V	B, D	A, B	DAL
M8340101^8873%&	887,000		C,H,K,M,V	B, D, F	A, B	DAL
M8340101^8983%&	898,000	Link at Top	C,H,K,M,V	B, D	A, B	DAL
M8340101^9093%&	909,000		C,H,K,M,V	B, D, F	A, B	DAL
M8340101^9103%&	910,000		C,H,K,M,V	G, J	A, B	DAL
M8340101^9203%&	920,000		C,H,K,M,V	B, D	A, B	DAL
M8340101^9313%&	931,000		C,H,K,M,V	B, D, F	A, B	DAL
M8340101^9423%&	942,000	Link at Top	C,H,K,M,V	B, D	A, B	DAL
M8340101^9533%&	953,000		C,H,K,M,V	B, D, F	A, B	DAL
M8340101^9653%&	965,000		C,H,K,M,V	B, D	A, B	DAL
M8340101^9763%&	976,000		C,H,K,M,V	B, D, F	A, B	DAL
M8340101^9883%&	988,000		C,H,K,M,V	B, D	A, B	DAL
M8340101^1004%&	1,000,000	Link at Top	C,H,K,M,V	B, D, F, G, J	A, B	DAL

RZ010 RESISTORS

DECADE BREAKDOWN

Click on the link below to see the associated parts selection listing:

Resistance Range
10.0 Ohms through 97.6 Ohms
100 Ohms through 988 Ohms
1,000 Ohms through 9,880 Ohms
10,000 Ohms through 98,800 Ohms
100,000 Ohms through 1,000,000 Ohms

MIL-PRF-83401/1 (RZ010), RESISTOR NETWORKS

Fixed, Resistor Networks, Film

Schematic	Characteristic	Element Power Rating (W)	Network Power Rating (W)
A	C	0.1	0.7
A	H	0.2	1.4
A	K	0.2	1.4
A	M	0.2	1.4
A	V	0.1	0.7
B	C	0.05	0.65
B	H	0.1	1.3
B	K	0.1	1.3
B	M	0.1	1.3
B	V	0.05	0.65

Style RZ010

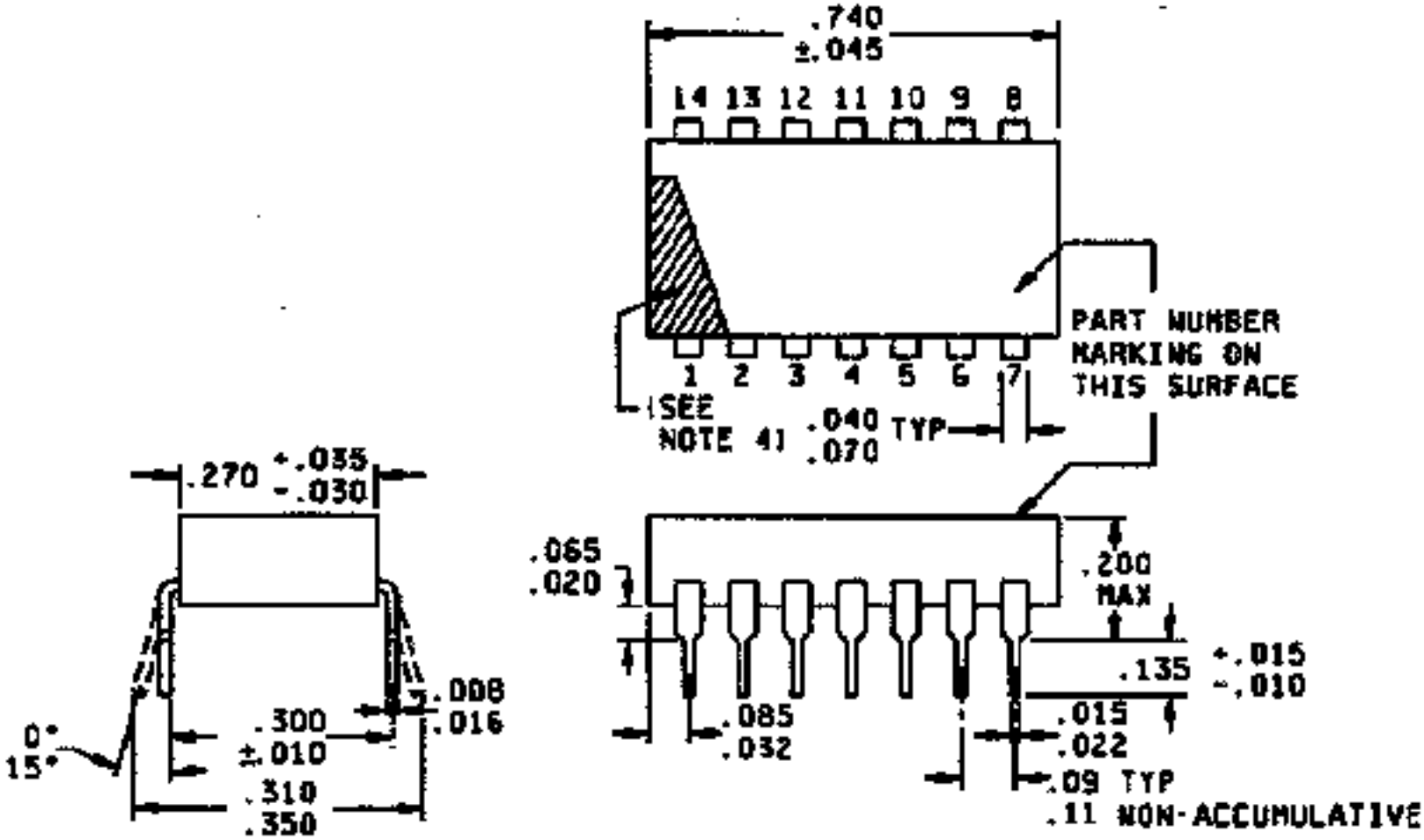

Notes:

1) Dimensions are inches.

2) Metric equivalents are given for general information only.

3) The picturization of the styles above is given as representative of the envelope item. Slight deviations from the outline shown, which are contained within the envelope and do not alter the functional aspects of the device, are acceptable.

4) Pin 1 locator shall be a dot, notch, stripe, or numeral 1 adjacent to pin no. 1, in the shaded area.

	Resistance	Power	Char.	Res.		
Part Number	Value (Ohms)	Rating	(^)	Tolerance	Schematic	Manufacturer
M8340101^10R0%&	10.0	See PN Ordering Section	C,H,K,M,V	F, G, J	A, B	DAL
M8340101^10R2%&	10.2		C,H,K,M,V	F	A, B	DAL
M8340101^10R5%&	10.5		C,H,K,M,V	F	A, B	DAL
M8340101^10R7%&	10.7		C,H,K,M,V	F	A, B	DAL
M8340101^11R0%&	11.0		C,H,K,M,V	F, G, J	A, B	DAL
M8340101^11R3%&	11.3	See PN Ordering Section	C,H,K,M,V	F	A, B	DAL
M8340101^11R5%&	11.5		C,H,K,M,V	F	A, B	DAL
M8340101^11R8%&	11.8		C,H,K,M,V	F	A, B	DAL
M8340101^12R0%&	12.0		C,H,K,M,V	F, G, J	A, B	DAL
M8340101^12R1%&	12.1		C,H,K,M,V	F	A, B	DAL
M8340101^12R4%&	12.4	See PN Ordering Section	C,H,K,M,V	F	A, B	DAL
M8340101^12R7%&	12.7		C,H,K,M,V	F	A, B	DAL
M8340101^13R0%&	13.0		C,H,K,M,V	F, G, J	A, B	DAL
M8340101^13R3%&	13.3		C,H,K,M,V	F	A, B	DAL
	Resistance	Power	Char.	Res.		
Part Number	Value (Ohms)	Rating	(^)	Tolerance	Schematic	Manufacturer
M8340101^13R7%&	13.7		C,H,K,M,V	F	A, B	DAL
M8340101^14R0%&	14.0	See PN Ordering Section	C,H,K,M,V	F	A, B	DAL
M8340101^14R3%&	14.3		C,H,K,M,V	F	A, B	DAL
M8340101^14R7%&	14.7		C,H,K,M,V	F	A, B	DAL
M8340101^15R0%&	15.0		C,H,K,M,V	F, G, J	A, B	DAL
M8340101^15R4%&	15.4		C,H,K,M,V	F	A, B	DAL
M8340101^15R8%&	15.8	See PN Ordering Section	C,H,K,M,V	F	A, B	DAL
M8340101^16R0%&	16.0		C,H,K,M,V	G, J	A, B	DAL
M8340101^16R2%&	16.2		C,H,K,M,V	F	A, B	DAL
M8340101^16R5%&	16.5		C,H,K,M,V	F	A, B	DAL
M8340101^16R9%&	16.9		C,H,K,M,V	F	A, B	DAL
M8340101^17R4%&	17.4	See PN Ordering Section	C,H,K,M,V	F	A, B	DAL
M8340101^17R8%&	17.8		C,H,K,M,V	F	A, B	DAL
M8340101^18R0%&	18.0		C,H,K,M,V	G, J	A, B	DAL
	Resistance	Power	Char.	Res.		
Part Number	Value (Ohms)	Rating	(^)	Tolerance	Schematic	Manufacturer
M8340101^18R2%&	18.2		C,H,K,M,V	F	A, B	DAL
M8340101^18R7%&	18.7		C,H,K,M,V	F	A, B	DAL
M8340101^19R1%&	19.1	See PN Ordering Section	C,H,K,M,V	F	A, B	DAL
M8340101^19R6%&	19.6		C,H,K,M,V	F	A, B	DAL
M8340101^20R0%&	20.0		C,H,K,M,V	F, G, J	A, B	DAL
M8340101^20R5%&	20.5		C,H,K,M,V	F	A, B	DAL
M8340101^21R0%&	21.0		C,H,K,M,V	F	A, B	DAL
M8340101^21R5%&	21.5	See PN Ordering Section	C,H,K,M,V	F	A, B	DAL
M8340101^22R0%&	22.0		C,H,K,M,V	G, J	A, B	DAL
M8340101^22R1%&	22.1		C,H,K,M,V	F	A, B	DAL

M8340101^22R6%&	22.6		C,H,K,M,V	F	A, B	DAL
M8340101^23R2%&	23.2		C,H,K,M,V	F	A, B	DAL
M8340101^23R7%&	23.7	See PN Ordering Section	C,H,K,M,V	F	A, B	DAL
M8340101^24R0%&	24.0		C,H,K,M,V	F, G, J	A, B	DAL
	Resistance	Power	Char.	Res.		
Part Number	Value (Ohms)	Rating	(^)	Tolerance	Schematic	Manufacturer
M8340101^24R3%&	24.3		C,H,K,M,V	F	A, B	DAL
M8340101^24R9%&	24.9		C,H,K,M,V	F	A, B	DAL
M8340101^25R5%&	25.5		C,H,K,M,V	F	A, B	DAL
M8340101^26R1%&	26.1	See PN Ordering Section	C,H,K,M,V	F	A, B	DAL
M8340101^26R7%&	26.7		C,H,K,M,V	F	A, B	DAL
M8340101^27R0%&	27.0		C,H,K,M,V	G, J	A, B	DAL,TEC
M8340101^27R4%&	27.4		C,H,K,M,V	F	A, B	DAL,TEC
M8340101^28R0%&	28.0		C,H,K,M,V	F	A, B	DAL,TEC
M8340101^28R7%&	28.7	See PN Ordering Section	C,H,K,M,V	F	A, B	DAL,TEC
M8340101^29R4%&	29.4		C,H,K,M,V	F	A, B	DAL,TEC
M8340101^30R0%&	30.0		C,H,K,M,V	G, J	A, B	DAL,TEC
M8340101^30R1%&	30.1		C,H,K,M,V	F	A, B	DAL,TEC
M8340101^30R9%&	30.9		C,H,K,M,V	F	A, B	DAL,TEC
M8340101^31R6%&	31.6	See PN Ordering Section	C,H,K,M,V	F	A, B	DAL,TEC
	Resistance	Power	Char.	Res.		
Part Number	Value (Ohms)	Rating	(^)	Tolerance	Schematic	Manufacturer
M8340101^32R4%&	32.4		C,H,K,M,V	F	A, B	DAL,TEC
M8340101^33R0%&	33.0		C,H,K,M,V	G, J	A, B	DAL,TEC
M8340101^33R2%&	33.2		C,H,K,M,V	F	A, B	DAL,TEC
M8340101^34R0%&	34.0		C,H,K,M,V	F	A, B	DAL,TEC
M8340101^34R8%&	34.8	See PN Ordering Section	C,H,K,M,V	F	A, B	DAL,TEC
M8340101^35R7%&	35.7		C,H,K,M,V	F	A, B	DAL,TEC
M8340101^36R0%&	36.0		C,H,K,M,V	G, J	A, B	DAL,TEC
M8340101^36R5%&	36.5		C,H,K,M,V	F	A, B	DAL,TEC
M8340101^37R4%&	37.4		C,H,K,M,V	F	A, B	DAL,TEC
M8340101^38R3%&	38.3	See PN Ordering Section	C,H,K,M,V	F	A, B	DAL,TEC
M8340101^39R0%&	39.0		C,H,K,M,V	G, J	A, B	DAL,TEC
M8340101^39R2%&	39.2		C,H,K,M,V	F	A, B	DAL,TEC
M8340101^40R2%&	40.2		C,H,K,M,V	F	A, B	DAL,TEC
M8340101^41R2%&	41.2		C,H,K,M,V	F	A, B	DAL,TEC
	Resistance	Power	Char.	Res.		
Part Number	Value (Ohms)	Rating	(^)	Tolerance	Schematic	Manufacturer
M8340101^42R2%&	42.2	See PN Ordering Section	C,H,K,M,V	F	A, B	DAL,TEC
M8340101^43R0%&	43.0		C,H,K,M,V	G, J	A, B	DAL,TEC
M8340101^43R2%&	43.2		C,H,K,M,V	F	A, B	DAL,TEC
M8340101^44R2%&	44.2		C,H,K,M,V	F	A, B	DAL,TEC
M8340101^45R3%&	45.3		C,H,K,M,V	F	A, B	DAL,TEC
M8340101^46R4%&	46.4	See PN Ordering Section	C,H,K,M,V	F	A, B	DAL,TEC
M8340101^47R0%&	47.0		C,H,K,M,V	G, J	A, B	DAL,TEC
M8340101^47R5%&	47.5		C,H,K,M,V	F	A, B	DAL,TEC
M8340101^48R7%&	48.7		C,H,K,M,V	F	A, B	DAL,TEC

M8340101^49R9%&	49.9		C,H,K,M,V	F	A, B	DAL,TEC
M8340101^51R0%&	51.0	See PN Ordering Section	C,H,K,M,V	G, J	A, B	DAL,IRC2,TEC
M8340101^51R1%&	51.1		C,H,K,M,V	F	A, B	DAL,IRC2,TEC
M8340101^52R3%&	52.3		C,H,K,M,V	F	A, B	DAL,IRC2,TEC
M8340101^53R6%&	53.6		C,H,K,M,V	F	A, B	DAL,IRC2,TEC
	Resistance	Power	Char.	Res.		
Part Number	Value (Ohms)	Rating	(^)	Tolerance	Schematic	Manufacturer
M8340101^54R9%&	54.9		C,H,K,M,V	F	A, B	DAL,IRC2,TEC
M8340101^56R0%&	56.0	See PN Ordering Section	C,H,K,M,V	G, J	A, B	DAL,IRC2,TEC
M8340101^56R2%&	56.2		C,H,K,M,V	F	A, B	DAL,IRC2,TEC
M8340101^57R6%&	57.6		C,H,K,M,V	F	A, B	DAL,IRC2,TEC
M8340101^59R0%&	59.0		C,H,K,M,V	F	A, B	DAL,IRC2,TEC
M8340101^60R4%&	60.4		C,H,K,M,V	F	A, B	DAL,IRC2,TEC
M8340101^61R9%&	61.9	See PN Ordering Section	C,H,K,M,V	F	A, B	DAL,IRC2,TEC
M8340101^62R0%&	62.0		C,H,K,M,V	G, J	A, B	DAL,IRC2,TEC
M8340101^63R4%&	63.4		C,H,K,M,V	F	A, B	DAL,IRC2,TEC
M8340101^64R9%&	64.9		C,H,K,M,V	F	A, B	DAL,IRC2,TEC
M8340101^66R5%&	66.5		C,H,K,M,V	F	A, B	DAL,IRC2,TEC
M8340101^68R0%&	68.0	See PN Ordering Section	C,H,K,M,V	G, J	A, B	DAL,IRC2,TEC
M8340101^68R1%&	68.1		C,H,K,M,V	F	A, B	DAL,IRC2,TEC
M8340101^69R8%&	69.8		C,H,K,M,V	F	A, B	DAL,IRC2,TEC
	Resistance	Power	Char.	Res.		
Part Number	Value (Ohms)	Rating	(^)	Tolerance	Schematic	Manufacturer
M8340101^71R5%&	71.5		C,H,K,M,V	F	A, B	DAL,IRC2,TEC
M8340101^73R2%&	73.2		C,H,K,M,V	F	A, B	DAL,IRC2,TEC
M8340101^75R0%&	75.0	See PN Ordering Section	C,H,K,M,V	F, G, J	A, B	DAL,IRC2,TEC
M8340101^76R8%&	76.8		C,H,K,M,V	F	A, B	DAL,IRC2,TEC
M8340101^78R7%&	78.7		C,H,K,M,V	F	A, B	DAL,IRC2,TEC
M8340101^80R6%&	80.6		C,H,K,M,V	F	A, B	DAL,IRC2,TEC
M8340101^82R0%&	82.0		C,H,K,M,V	G, J	A, B	DAL,IRC2,TEC
M8340101^82R5%&	82.5	See PN Ordering Section	C,H,K,M,V	F	A, B	DAL,IRC2,TEC
M8340101^84R5%&	84.5		C,H,K,M,V	F	A, B	DAL,IRC2,TEC
M8340101^86R6%&	86.6		C,H,K,M,V	F	A, B	DAL,IRC2,TEC
M8340101^88R7%&	88.7		C,H,K,M,V	F	A, B	DAL,IRC2,TEC
M8340101^90R9%&	90.9		C,H,K,M,V	F	A, B	DAL,IRC2,TEC
M8340101^91R0%&	91.0	See PN Ordering Section	C,H,K,M,V	G, J	A, B	DAL,IRC2,TEC
M8340101^93R1%&	93.1		C,H,K,M,V	F	A, B	DAL,IRC2,TEC
M8340101^95R3%&	95.3		C,H,K,M,V	F	A, B	DAL,IRC2,TEC
M8340101^97R6%&	97.6		C,H,K,M,V	F	A, B	DAL,IRC2,TEC
	Resistance	Power	Char.	Res.		
Part Number	Value (Ohms)	Rating	(^)	Tolerance	Schematic	Manufacturer

MIL-PRF-83401/1 (RZ010) Film Resistor Networks: 100 Ohms Through 988 Ohms

	Resistance	Power	Char.	Res.		

Part Number	Value (Ohms)	Rating	(^)	Tolerance	Schematic	Manufacturer
M8340101^1000%&	100		C,H,K,M,V	B, D, F, G, J	A, B	DAL,IRC2,TEC,VIS,VIS2
M8340101^1010%&	101	See PN Ordering Section	C,H,K,M,V	B, D	A, B	DAL,IRC2,TEC,VIS,VIS2
M8340101^1020%&	102		C,H,K,M,V	B, D, F	A, B	DAL,IRC2,TEC,VIS,VIS2
M8340101^1040%&	104		C,H,K,M,V	B, D	A, B	DAL,IRC2,TEC,VIS,VIS2
M8340101^1050%&	105		C,H,K,M,V	B, D, F	A, B	DAL,IRC2,TEC,VIS,VIS2
M8340101^1060%&	106		C,H,K,M,V	B, D	A, B	DAL,IRC2,TEC,VIS,VIS2
M8340101^1070%&	107	See PN Ordering Section	C,H,K,M,V	B, D, F	A, B	DAL,IRC2,TEC,VIS,VIS2
M8340101^1090%&	109		C,H,K,M,V	B, D	A, B	DAL,IRC2,TEC,VIS,VIS2
M8340101^1100%&	110		C,H,K,M,V	B, D, F, G, J	A, B	DAL,IRC2,TEC,VIS,VIS2
M8340101^1110%&	111		C,H,K,M,V	B, D	A, B	DAL,IRC2,TEC,VIS,VIS2
M8340101^1130%&	113		C,H,K,M,V	B, D, F	A, B	DAL,IRC2,TEC,VIS,VIS2
M8340101^1140%&	114	See PN Ordering Section	C,H,K,M,V	B, D	A, B	DAL,IRC2,TEC,VIS,VIS2
M8340101^1150%&	115		C,H,K,M,V	B, D, F	A, B	DAL,IRC2,TEC,VIS,VIS2
M8340101^1170%&	117		C,H,K,M,V	B, D	A, B	DAL,IRC2,TEC,VIS,VIS2
	Resistance	Power	Char.	Res.		
Part Number	Value (Ohms)	Rating	(^)	Tolerance	Schematic	Manufacturer
M8340101^1180%&	118		C,H,K,M,V	B, D, F	A, B	DAL,IRC2,TEC,VIS,VIS2
M8340101^1200%&	120		C,H,K,M,V	B, D, F, G, J	A, B	DAL,IRC2,TEC,VIS,VIS2
M8340101^1210%&	121	See PN Ordering Section	C,H,K,M,V	B, D, F	A, B	DAL,IRC2,TEC,VIS,VIS2
M8340101^1230%&	123		C,H,K,M,V	B, D	A, B	DAL,IRC2,TEC,VIS,VIS2
M8340101^1240%&	124		C,H,K,M,V	B, D, F	A, B	DAL,IRC2,TEC,VIS,VIS2
M8340101^1260%&	126		C,H,K,M,V	B, D	A, B	DAL,IRC2,TEC,VIS,VIS2
M8340101^1270%&	127		C,H,K,M,V	B, D, F	A, B	DAL,IRC2,TEC,VIS,VIS2
M8340101^1290%&	129	See PN Ordering Section	C,H,K,M,V	B, D	A, B	DAL,IRC2,TEC,VIS,VIS2
M8340101^1300%&	130		C,H,K,M,V	B, D, F, G, J	A, B	DAL,IRC2,TEC,VIS,VIS2
M8340101^1320%&	132		C,H,K,M,V	B, D	A, B	DAL,IRC2,TEC,VIS,VIS2
M8340101^1330%&	133		C,H,K,M,V	B, D, F	A, B	DAL,IRC2,TEC,VIS,VIS2
M8340101^1350%&	135	See PN Ordering Section	C,H,K,M,V	B, D	A, B	DAL,IRC2,TEC,VIS,VIS2
M8340101^1370%&	137		C,H,K,M,V	B, D, F	A, B	DAL,IRC2,TEC,VIS,VIS2
	Resistance	Power	Char.	Res.		
Part Number	Value (Ohms)	Rating	(^)	Tolerance	Schematic	Manufacturer
M8340101^1380%&	138		C,H,K,M,V	B, D	A, B	DAL,IRC2,TEC,VIS,VIS2
M8340101^1400%&	140		C,H,K,M,V	B, D, F	A, B	DAL,IRC2,TEC,VIS,VIS2
M8340101^1420%&	142		C,H,K,M,V	B, D	A, B	DAL,IRC2,TEC,VIS,VIS2
M8340101^1430%&	143	See PN Ordering Section	C,H,K,M,V	B, D, F	A, B	DAL,IRC2,TEC,VIS,VIS2
M8340101^1450%&	145		C,H,K,M,V	B, D	A, B	DAL,IRC2,TEC,VIS,VIS2
M8340101^1470%&	147		C,H,K,M,V	B, D, F	A, B	DAL,IRC2,TEC,VIS,VIS2
M8340101^1490%&	149		C,H,K,M,V	B, D	A, B	DAL,IRC2,TEC,VIS,VIS2
M8340101^1500%&	150		C,H,K,M,V	B, D, F, G, J	A, B	DAL,IRC2,TEC,VIS,VIS2
M8340101^1520%&	152	See PN Ordering Section	C,H,K,M,V	B, D	A, B	DAL,IRC2,TEC,VIS,VIS2
M8340101^1540%&	154		C,H,K,M,V	B, D, F	A, B	DAL,IRC2,TEC,VIS,VIS2
M8340101^1560%&	156		C,H,K,M,V	B, D	A, B	DAL,IRC2,TEC,VIS,VIS2
M8340101^1580%&	158		C,H,K,M,V	B, D, F	A, B	DAL,IRC2,TEC,VIS,VIS2
M8340101^1600%&	160		C,H,K,M,V	B, D, G, J	A, B	DAL,IRC2,TEC,VIS,VIS2
M8340101^1620%&	162	See PN Ordering Section	C,H,K,M,V	B, D, F	A, B	DAL,IRC2,TEC,VIS,VIS2
	Resistance	Power	Char.	Res.		

Part Number	Value (Ohms)	Rating	(^)	Tolerance	Schematic	Manufacturer
M8340101^1640%&	164		C,H,K,M,V	B, D	A, B	DAL,IRC2,TEC,VIS,VIS2
M8340101^1650%&	165		C,H,K,M,V	B, D, F	A, B	DAL,IRC2,TEC,VIS,VIS2
M8340101^1670%&	167		C,H,K,M,V	B, D	A, B	DAL,IRC2,TEC,VIS,VIS2
M8340101^1690%&	169		C,H,K,M,V	B, D, F	A, B	DAL,IRC2,TEC,VIS,VIS2
M8340101^1720%&	172	See PN Ordering Section	C,H,K,M,V	B, D	A, B	DAL,IRC2,TEC,VIS,VIS2
M8340101^1740%&	174		C,H,K,M,V	B, D, F	A, B	DAL,IRC2,TEC,VIS,VIS2
M8340101^1760%&	176		C,H,K,M,V	B, D	A, B	DAL,IRC2,TEC,VIS,VIS2
M8340101^1780%&	178		C,H,K,M,V	B, D, F	A, B	DAL,IRC2,TEC,VIS,VIS2
M8340101^1800%&	180		C,H,K,M,V	B, D, G, J	A, B	DAL,IRC2,TEC,VIS,VIS2
M8340101^1820%&	182	See PN Ordering Section	C,H,K,M,V	B, D, F	A, B	DAL,IRC2,TEC,VIS,VIS2
M8340101^1840%&	184		C,H,K,M,V	B, D	A, B	DAL,IRC2,TEC,VIS,VIS2
M8340101^1870%&	187		C,H,K,M,V	B, D, F	A, B	DAL,IRC2,TEC,VIS,VIS2
M8340101^1890%&	189		C,H,K,M,V	B, D	A, B	DAL,IRC2,TEC,VIS,VIS2
	Resistance	Power	Char.	Res.		
Part Number	Value (Ohms)	Rating	(^)	Tolerance	Schematic	Manufacturer
M8340101^1910%&	191		C,H,K,M,V	B, D, F	A, B	DAL,IRC2,TEC,VIS,VIS2
M8340101^1930%&	193	See PN Ordering Section	C,H,K,M,V	B, D	A, B	DAL,IRC2,TEC,VIS,VIS2
M8340101^1960%&	196		C,H,K,M,V	B, D, F	A, B	DAL,IRC2,TEC,VIS,VIS2
M8340101^1980%&	198		C,H,K,M,V	B, D	A, B	DAL,IRC2,TEC,VIS,VIS2
M8340101^2000%&	200		C,H,K,M,V	B, D, F, G, J	A, B	DAL,IRC2,TEC,VIS,VIS2
M8340101^2030%&	203		C,H,K,M,V	B, D	A, B	DAL,IRC2,TEC,VIS,VIS2
M8340101^2050%&	205	See PN Ordering Section	C,H,K,M,V	B, D, F	A, B	DAL,IRC2,TEC,VIS,VIS2
M8340101^2080%&	208		C,H,K,M,V	B, D	A, B	DAL,IRC2,TEC,VIS,VIS2
M8340101^2100%&	210		C,H,K,M,V	B, D, F	A, B	DAL,IRC2,TEC,VIS,VIS2
M8340101^2130%&	213		C,H,K,M,V	B, D	A, B	DAL,IRC2,TEC,VIS,VIS2
M8340101^2150%&	215		C,H,K,M,V	B, D, F	A, B	DAL,IRC2,TEC,VIS,VIS2
M8340101^2180%&	218	See PN Ordering Section	C,H,K,M,V	B, D	A, B	DAL,IRC2,TEC,VIS,VIS2
M8340101^2200%&	220		C,H,K,M,V	G, J	A, B	DAL,IRC2,TEC,VIS,VIS2
M8340101^2210%&	221		C,H,K,M,V	B, D, F	A, B	DAL,IRC2,TEC,VIS,VIS2
	Resistance	Power	Char.	Res.		
Part Number	Value (Ohms)	Rating	(^)	Tolerance	Schematic	Manufacturer
M8340101^2230%&	223		C,H,K,M,V	B, D	A, B	DAL,IRC2,TEC,VIS,VIS2
M8340101^2260%&	226		C,H,K,M,V	B, D, F	A, B	DAL,IRC2,TEC,VIS,VIS2
M8340101^2290%&	229	See PN Ordering Section	C,H,K,M,V	B, D	A, B	DAL,IRC2,TEC,VIS,VIS2
M8340101^2320%&	232		C,H,K,M,V	B, D, F	A, B	DAL,IRC2,TEC,VIS,VIS2
M8340101^2340%&	234		C,H,K,M,V	B, D	A, B	DAL,IRC2,TEC,VIS,VIS2
M8340101^2370%&	237		C,H,K,M,V	B, D, F	A, B	DAL,IRC2,TEC,VIS,VIS2
M8340101^2400%&	240		C,H,K,M,V	B, D, F, G, J	A, B	DAL,IRC2,TEC,VIS,VIS2
M8340101^2430%&	243	See PN Ordering Section	C,H,K,M,V	B, D, F	A, B	DAL,IRC2,TEC,VIS,VIS2
M8340101^2460%&	246		C,H,K,M,V	B, D	A, B	DAL,IRC2,TEC,VIS,VIS2
M8340101^2490%&	249		C,H,K,M,V	B, D, F	A, B	DAL,IRC2,TEC,VIS,VIS2
M8340101^2520%&	252		C,H,K,M,V	B, D	A, B	DAL,IRC2,TEC,VIS,VIS2
M8340101^2550%&	255		C,H,K,M,V	B, D, F	A, B	DAL,IRC2,TEC,VIS,VIS2
M8340101^2580%&	258	See PN Ordering Section	C,H,K,M,V	B, D	A, B	DAL,IRC2,TEC,VIS,VIS2
	Resistance	Power	Char.	Res.		
Part Number	Value (Ohms)	Rating	(^)	Tolerance	Schematic	Manufacturer

M8340101^2610%&	261		C,H,K,M,V	B, D, F	A, B	DAL,IRC2,TEC,VIS,VIS2
M8340101^2640%&	264		C,H,K,M,V	B, D	A, B	DAL,IRC2,TEC,VIS,VIS2
M8340101^2670%&	267		C,H,K,M,V	B, D, F	A, B	DAL,IRC2,TEC,VIS,VIS2
M8340101^2700%&	270		C,H,K,M,V	G, J	A, B	DAL,IRC2,TEC,VIS,VIS2
M8340101^2710%&	271	See PN Ordering Section	C,H,K,M,V	B, D	A, B	DAL,IRC2,TEC,VIS,VIS2
M8340101^2740%&	274		C,H,K,M,V	B, D, F	A, B	DAL,IRC2,TEC,VIS,VIS2
M8340101^2770%&	277		C,H,K,M,V	B, D	A, B	DAL,IRC2,TEC,VIS,VIS2
M8340101^2800%&	280		C,H,K,M,V	B, D, F	A, B	DAL,IRC2,TEC,VIS,VIS2
M8340101^2840%&	284		C,H,K,M,V	B, D	A, B	DAL,IRC2,TEC,VIS,VIS2
M8340101^2870%&	287	See PN Ordering Section	C,H,K,M,V	B, D, F	A, B	DAL,IRC2,TEC,VIS,VIS2
M8340101^2910%&	291		C,H,K,M,V	B, D	A, B	DAL,IRC2,TEC,VIS,VIS2
M8340101^2940%&	294		C,H,K,M,V	B, D, F	A, B	DAL,IRC2,TEC,VIS,VIS2
M8340101^2980%&	298		C,H,K,M,V	B, D	A, B	DAL,IRC2,TEC,VIS,VIS2
	Resistance	Power	Char.	Res.		
Part Number	Value (Ohms)	Rating	(^)	Tolerance	Schematic	Manufacturer
M8340101^3000%&	300		C,H,K,M,V	G, J	A, B	DAL,IRC2,TEC,VIS,VIS2
M8340101^3010%&	301	See PN Ordering Section	C,H,K,M,V	B, D, F	A, B	DAL,IRC2,TEC,VIS,VIS2
M8340101^3050%&	305		C,H,K,M,V	B, D	A, B	DAL,IRC2,TEC,VIS,VIS2
M8340101^3090%&	309		C,H,K,M,V	B, D, F	A, B	DAL,IRC2,TEC,VIS,VIS2
M8340101^3120%&	312		C,H,K,M,V	B, D	A, B	DAL,IRC2,TEC,VIS,VIS2
M8340101^3160%&	316		C,H,K,M,V	B, D, F	A, B	DAL,IRC2,TEC,VIS,VIS2
M8340101^3200%&	320	See PN Ordering Section	C,H,K,M,V	B, D	A, B	DAL,IRC2,TEC,VIS,VIS2
M8340101^3240%&	324		C,H,K,M,V	B, D, F	A, B	DAL,IRC2,TEC,VIS,VIS2
M8340101^3280%&	328		C,H,K,M,V	B, D	A, B	DAL,IRC2,TEC,VIS,VIS2
M8340101^3300%&	330		C,H,K,M,V	G, J	A, B	DAL,IRC2,TEC,VIS,VIS2
M8340101^3320%&	332		C,H,K,M,V	B, D, F	A, B	DAL,IRC2,TEC,VIS,VIS2
M8340101^3360%&	336	See PN Ordering Section	C,H,K,M,V	B, D	A, B	DAL,IRC2,TEC,VIS,VIS2
	Resistance	Power	Char.	Res.		
Part Number	Value (Ohms)	Rating	(^)	Tolerance	Schematic	Manufacturer
M8340101^3400%&	340		C,H,K,M,V	B, D, F	A, B	DAL,IRC2,TEC,VIS,VIS2
M8340101^3440%&	344		C,H,K,M,V	B, D	A, B	DAL,IRC2,TEC,VIS,VIS2
M8340101^3480%&	348		C,H,K,M,V	B, D, F	A, B	DAL,IRC2,TEC,VIS,VIS2
M8340101^3520%&	352		C,H,K,M,V	B, D	A, B	DAL,IRC2,TEC,VIS,VIS2
M8340101^3570%&	357	See PN Ordering Section	C,H,K,M,V	B, D, F	A, B	DAL,IRC2,TEC,VIS,VIS2
M8340101^3600%&	360		C,H,K,M,V	G, J	A, B	DAL,IRC2,TEC,VIS,VIS2
M8340101^3610%&	361		C,H,K,M,V	B, D	A, B	DAL,IRC2,TEC,VIS,VIS2
M8340101^3650%&	365		C,H,K,M,V	B, D, F	A, B	DAL,IRC2,TEC,VIS,VIS2
M8340101^3700%&	370		C,H,K,M,V	B, D	A, B	DAL,IRC2,TEC,VIS,VIS2
M8340101^3740%&	374	See PN Ordering Section	C,H,K,M,V	B, D, F	A, B	DAL,IRC2,TEC,VIS,VIS2
M8340101^3790%&	379		C,H,K,M,V	B, D	A, B	DAL,IRC2,TEC,VIS,VIS2
M8340101^3830%&	383		C,H,K,M,V	B, D, F	A, B	DAL,IRC2,TEC,VIS,VIS2
M8340101^3880%&	388		C,H,K,M,V	B, D	A, B	DAL,IRC2,TEC,VIS,VIS2
	Resistance	Power	Char.	Res.		
Part Number	Value (Ohms)	Rating	(^)	Tolerance	Schematic	Manufacturer
M8340101^3900%&	390		C,H,K,M,V	G, J	A, B	DAL,IRC2,TEC,VIS,VIS2
M8340101^3920%&	392	See PN Ordering Section	C,H,K,M,V	B, D, F	A, B	DAL,IRC2,TEC,VIS,VIS2
M8340101^3970%&	397		C,H,K,M,V	B, D	A, B	DAL,IRC2,TEC,VIS,VIS2

M8340101^4020%&	402		C,H,K,M,V	B, D, F	A, B	DAL,IRC2,TEC,VIS,VIS2
M8340101^4070%&	407		C,H,K,M,V	B, D	A, B	DAL,IRC2,TEC,VIS,VIS2
M8340101^4120%&	412		C,H,K,M,V	B, D, F	A, B	DAL,IRC2,TEC,VIS,VIS2
M8340101^4170%&	417	See PN Ordering Section	C,H,K,M,V	B, D	A, B	DAL,IRC2,TEC,VIS,VIS2
M8340101^4220%&	422		C,H,K,M,V	B, D, F	A, B	DAL,IRC2,TEC,VIS,VIS2
M8340101^4270%&	427		C,H,K,M,V	B, D	A, B	DAL,IRC2,TEC,VIS,VIS2
M8340101^4300%&	430		C,H,K,M,V	G, J	A, B	DAL,IRC2,TEC,VIS,VIS2
M8340101^4320%&	432		C,H,K,M,V	B, D, F	A, B	DAL,IRC2,TEC,VIS,VIS2
M8340101^4370%&	437	See PN Ordering Section	C,H,K,M,V	B, D	A, B	DAL,IRC2,TEC,VIS,VIS2
M8340101^4420%&	442		C,H,K,M,V	B, D, F	A, B	DAL,IRC2,TEC,VIS,VIS2
M8340101^4480%&	448		C,H,K,M,V	B, D	A, B	DAL,IRC2,TEC,VIS,VIS2
	Resistance	Power	Char.	Res.		
Part Number	Value (Ohms)	Rating	(^)	Tolerance	Schematic	Manufacturer
M8340101^4530%&	453		C,H,K,M,V	B, D, F	A, B	DAL,IRC2,TEC,VIS,VIS2
M8340101^4590%&	459		C,H,K,M,V	B, D	A, B	DAL,IRC2,TEC,VIS,VIS2
M8340101^4640%&	464	See PN Ordering Section	C,H,K,M,V	B, D, F	A, B	DAL,IRC2,TEC,VIS,VIS2
M8340101^4700%&	470		C,H,K,M,V	B, D, G, J	A, B	DAL,IRC2,TEC,VIS,VIS2
M8340101^4750%&	475		C,H,K,M,V	B, D, F	A, B	DAL,IRC2,TEC,VIS,VIS2
M8340101^4810%&	481		C,H,K,M,V	B, D	A, B	DAL,IRC2,TEC,VIS,VIS2
M8340101^4870%&	487		C,H,K,M,V	B, D, F	A, B	DAL,IRC2,TEC,VIS,VIS2
M8340101^4930%&	493	See PN Ordering Section	C,H,K,M,V	B, D	A, B	DAL,IRC2,TEC,VIS,VIS2
M8340101^4990%&	499		C,H,K,M,V	B, D, F	A, B	DAL,IRC2,TEC,VIS,VIS2
M8340101^5050%&	505		C,H,K,M,V	B, D	A, B	DAL,IRC2,TEC,VIS,VIS2
M8340101^5100%&	510		C,H,K,M,V	G, J	A, B	DAL,IRC2,TEC,VIS,VIS2
M8340101^5110%&	511		C,H,K,M,V	B, D, F	A, B	DAL,IRC2,TEC,VIS,VIS2
M8340101^5170%&	517	See PN Ordering Section	C,H,K,M,V	B, D	A, B	DAL,IRC2,TEC,VIS,VIS2
	Resistance	Power	Char.	Res.		
Part Number	Value (Ohms)	Rating	(^)	Tolerance	Schematic	Manufacturer
M8340101^5230%&	523		C,H,K,M,V	B, D, F	A, B	DAL,IRC2,TEC,VIS,VIS2
M8340101^5300%&	530		C,H,K,M,V	B, D	A, B	DAL,IRC2,TEC,VIS,VIS2
M8340101^5360%&	536		C,H,K,M,V	B, D, F	A, B	DAL,IRC2,TEC,VIS,VIS2
M8340101^5420%&	542		C,H,K,M,V	B, D	A, B	DAL,IRC2,TEC,VIS,VIS2
M8340101^5490%&	549	See PN Ordering Section	C,H,K,M,V	B, D, F	A, B	DAL,IRC2,TEC,VIS,VIS2
M8340101^5560%&	556		C,H,K,M,V	B, D	A, B	DAL,IRC2,TEC,VIS,VIS2
M8340101^5600%&	560		C,H,K,M,V	G, J	A, B	DAL,IRC2,TEC,VIS,VIS2
M8340101^5620%&	562		C,H,K,M,V	B, D, F	A, B	DAL,IRC2,TEC,VIS,VIS2
M8340101^5690%&	569		C,H,K,M,V	B, D	A, B	DAL,IRC2,TEC,VIS,VIS2
M8340101^5760%&	576	See PN Ordering Section	C,H,K,M,V	B, D, F	A, B	DAL,IRC2,TEC,VIS,VIS2
M8340101^5830%&	583		C,H,K,M,V	B, D	A, B	DAL,IRC2,TEC,VIS,VIS2
M8340101^5900%&	590		C,H,K,M,V	B, D, F	A, B	DAL,IRC2,TEC,VIS,VIS2
M8340101^5970%&	597		C,H,K,M,V	B, D	A, B	DAL,IRC2,TEC,VIS,VIS2
	Resistance	Power	Char.	Res.		
Part Number	Value (Ohms)	Rating	(^)	Tolerance	Schematic	Manufacturer
M8340101^6040%&	604		C,H,K,M,V	B, D, F	A, B	DAL,IRC2,TEC,VIS,VIS2
M8340101^6120%&	612	See PN Ordering Section	C,H,K,M,V	B, D	A, B	DAL,IRC2,TEC,VIS,VIS2
M8340101^6190%&	619		C,H,K,M,V	B, D, F	A, B	DAL,IRC2,TEC,VIS,VIS2
M8340101^6200%&	620		C,H,K,M,V	G, J	A, B	DAL,IRC2,TEC,VIS,VIS2

M8340101^6260%&	626		C,H,K,M,V	B, D	A, B	DAL,IRC2,TEC,VIS,VIS2
M8340101^6340%&	634		C,H,K,M,V	B, D, F	A, B	DAL,IRC2,TEC,VIS,VIS2
M8340101^6420%&	642	See PN Ordering Section	C,H,K,M,V	B, D	A, B	DAL,IRC2,TEC,VIS,VIS2
M8340101^6490%&	649		C,H,K,M,V	B, D, F	A, B	DAL,IRC2,TEC,VIS,VIS2
M8340101^6570%&	657		C,H,K,M,V	B, D	A, B	DAL,IRC2,TEC,VIS,VIS2
M8340101^6650%&	665		C,H,K,M,V	B, D, F	A, B	DAL,IRC2,TEC,VIS,VIS2
M8340101^6730%&	673		C,H,K,M,V	B, D	A, B	DAL,IRC2,TEC,VIS,VIS2
M8340101^6800%&	680	See PN Ordering Section	C,H,K,M,V	G, J	A, B	DAL,IRC2,TEC,VIS,VIS2
	Resistance	Power	Char.	Res.		
Part Number	Value (Ohms)	Rating	(^)	Tolerance	Schematic	Manufacturer
M8340101^6810%&	681		C,H,K,M,V	B, D, F	A, B	DAL,IRC2,TEC,VIS,VIS2
M8340101^6900%&	690		C,H,K,M,V	B, D	A, B	DAL,IRC2,TEC,VIS,VIS2
M8340101^6980%&	698		C,H,K,M,V	B, D, F	A, B	DAL,IRC2,TEC,VIS,VIS2
M8340101^7060%&	706		C,H,K,M,V	B, D	A, B	DAL,IRC2,TEC,VIS,VIS2
M8340101^7150%&	715	See PN Ordering Section	C,H,K,M,V	B, D, F	A, B	DAL,IRC2,TEC,VIS,VIS2
M8340101^7230%&	723		C,H,K,M,V	B, D	A, B	DAL,IRC2,TEC,VIS,VIS2
M8340101^7320%&	732		C,H,K,M,V	B, D, F	A, B	DAL,IRC2,TEC,VIS,VIS2
M8340101^7410%&	741		C,H,K,M,V	B, D	A, B	DAL,IRC2,TEC,VIS,VIS2
M8340101^7500%&	750		C,H,K,M,V	B, D, F, G, J	A, B	DAL,IRC2,TEC,VIS,VIS2
M8340101^7590%&	759	See PN Ordering Section	C,H,K,M,V	B, D	A, B	DAL,IRC2,TEC,VIS,VIS2
M8340101^7680%&	768		C,H,K,M,V	B, D, F	A, B	DAL,IRC2,TEC,VIS,VIS2
M8340101^7770%&	777		C,H,K,M,V	B, D	A, B	DAL,IRC2,TEC,VIS,VIS2
M8340101^7870%&	787		C,H,K,M,V	B, D, F	A, B	DAL,IRC2,TEC,VIS,VIS2
	Resistance	Power	Char.	Res.		
Part Number	Value (Ohms)	Rating	(^)	Tolerance	Schematic	Manufacturer
M8340101^7960%&	796		C,H,K,M,V	B, D	A, B	DAL,IRC2,TEC,VIS,VIS2
M8340101^8060%&	806	See PN Ordering Section	C,H,K,M,V	B, D, F	A, B	DAL,IRC2,TEC,VIS,VIS2
M8340101^8160%&	816		C,H,K,M,V	B, D	A, B	DAL,IRC2,TEC,VIS,VIS2
M8340101^8200%&	820		C,H,K,M,V	G, J	A, B	DAL,IRC2,TEC,VIS,VIS2
M8340101^8250%&	825		C,H,K,M,V	B, D, F	A, B	DAL,IRC2,TEC,VIS,VIS2
M8340101^8350%&	835		C,H,K,M,V	B, D	A, B	DAL,IRC2,TEC,VIS,VIS2
M8340101^8450%&	845	See PN Ordering Section	C,H,K,M,V	B, D, F	A, B	DAL,IRC2,TEC,VIS,VIS2
M8340101^8560%&	856		C,H,K,M,V	B, D	A, B	DAL,IRC2,TEC,VIS,VIS2
M8340101^8660%&	866		C,H,K,M,V	B, D, F	A, B	DAL,IRC2,TEC,VIS,VIS2
M8340101^8760%&	876		C,H,K,M,V	B, D	A, B	DAL,IRC2,TEC,VIS,VIS2
M8340101^8870%&	887		C,H,K,M,V	B, D, F	A, B	DAL,IRC2,TEC,VIS,VIS2
M8340101^8980%&	898	See PN Ordering Section	C,H,K,M,V	B, D	A, B	DAL,IRC2,TEC,VIS,VIS2
M8340101^9090%&	909		C,H,K,M,V	B, D, F	A, B	DAL,IRC2,TEC,VIS,VIS2
M8340101^9100%&	910		C,H,K,M,V	G, J	A, B	DAL,IRC2,TEC,VIS,VIS2
	Resistance	Power	Char.	Res.		
Part Number	Value (Ohms)	Rating	(^)	Tolerance	Schematic	Manufacturer
M8340101^9200%&	920		C,H,K,M,V	B, D	A, B	DAL,IRC2,TEC,VIS,VIS2
M8340101^9310%&	931		C,H,K,M,V	B, D, F	A, B	DAL,IRC2,TEC,VIS,VIS2
M8340101^9420%&	942	See PN Ordering Section	C,H,K,M,V	B, D	A, B	DAL,IRC2,TEC,VIS,VIS2
M8340101^9530%&	953		C,H,K,M,V	B, D, F	A, B	DAL,IRC2,TEC,VIS,VIS2
M8340101^9650%&	965		C,H,K,M,V	B, D	A, B	DAL,IRC2,TEC,VIS,VIS2
M8340101^9760%&	976		C,H,K,M,V	B, D, F	A, B	DAL,IRC2,TEC,VIS,VIS2

M8340101^9880%&	988		C,H,K,M,V	B, D	A, B	DAL,IRC2,TEC,VIS,VIS2
	Resistance	Power	Char.	Res.		
Part Number	Value (Ohms)	Rating	(^)	Tolerance	Schematic	Manufacturer

MIL-PRF-83401/1 (RZ010) Film Resistor Networks: 1,000 Ohms Through 9,880 Ohms

	Resistance	Power	Char.	Res.		
Part Number	Value (Ohms)	Rating	(^)	Tolerance	Schematic	Manufacturer
M8340101^1001%&	1,000	See PN Ordering Section	C,H,K,M,V	B, D, F, G, J	A, B	DAL,IRC2,TEC,VIS,VIS2
M8340101^1011%&	1,010		C,H,K,M,V	B, D	A, B	DAL,IRC2,TEC,VIS,VIS2
M8340101^1021%&	1,020		C,H,K,M,V	B, D, F	A, B	DAL,IRC2,TEC,VIS,VIS2
M8340101^1041%&	1,040		C,H,K,M,V	B, D	A, B	DAL,IRC2,TEC,VIS,VIS2
M8340101^1051%&	1,050		C,H,K,M,V	B, D, F	A, B	DAL,IRC2,TEC,VIS,VIS2
M8340101^1061%&	1,060	See PN Ordering Section	C,H,K,M,V	B, D	A, B	DAL,IRC2,TEC,VIS,VIS2
M8340101^1071%&	1,070		C,H,K,M,V	B, D, F	A, B	DAL,IRC2,TEC,VIS,VIS2
M8340101^1091%&	1,090		C,H,K,M,V	B, D	A, B	DAL,IRC2,TEC,VIS,VIS2
M8340101^1101%&	1,100		C,H,K,M,V	B, D, F, G, J	A, B	DAL,IRC2,TEC,VIS,VIS2
M8340101^1111%&	1,110		C,H,K,M,V	B, D	A, B	DAL,IRC2,TEC,VIS,VIS2
M8340101^1131%&	1,130	See PN Ordering Section	C,H,K,M,V	B, D, F	A, B	DAL,IRC2,TEC,VIS,VIS2
M8340101^1141%&	1,140		C,H,K,M,V	B, D	A, B	DAL,IRC2,TEC,VIS,VIS2
M8340101^1151%&	1,150		C,H,K,M,V	B, D, F	A, B	DAL,IRC2,TEC,VIS,VIS2
M8340101^1171%&	1,170		C,H,K,M,V	B, D	A, B	DAL,IRC2,TEC,VIS,VIS2
	Resistance	Power	Char.	Res.		
Part Number	Value (Ohms)	Rating	(^)	Tolerance	Schematic	Manufacturer
M8340101^1181%&	1,180		C,H,K,M,V	B, D, F	A, B	DAL,IRC2,TEC,VIS,VIS2
M8340101^1201%&	1,200	See PN Ordering Section	C,H,K,M,V	B, D, F, G, J	A, B	DAL,IRC2,TEC,VIS,VIS2
M8340101^1211%&	1,210		C,H,K,M,V	B, D, F	A, B	DAL,IRC2,TEC,VIS,VIS2
M8340101^1231%&	1,230		C,H,K,M,V	B, D	A, B	DAL,IRC2,TEC,VIS,VIS2
M8340101^1241%&	1,240		C,H,K,M,V	B, D, F	A, B	DAL,IRC2,TEC,VIS,VIS2
M8340101^1261%&	1,260		C,H,K,M,V	B, D	A, B	DAL,IRC2,TEC,VIS,VIS2
M8340101^1271%&	1,270	See PN Ordering Section	C,H,K,M,V	B, D, F	A, B	DAL,IRC2,TEC,VIS,VIS2
M8340101^1291%&	1,290		C,H,K,M,V	B, D	A, B	DAL,IRC2,TEC,VIS,VIS2
M8340101^1301%&	1,300		C,H,K,M,V	B, D, F, G, J	A, B	DAL,IRC2,TEC,VIS,VIS2
M8340101^1321%&	1,320		C,H,K,M,V	B, D	A, B	DAL,IRC2,TEC,VIS,VIS2
M8340101^1331%&	1,330		C,H,K,M,V	B, D, F	A, B	DAL,IRC2,TEC,VIS,VIS2
M8340101^1351%&	1,350	See PN Ordering Section	C,H,K,M,V	B, D	A, B	DAL,IRC2,TEC,VIS,VIS2
M8340101^1371%&	1,370		C,H,K,M,V	B, D, F	A, B	DAL,IRC2,TEC,VIS,VIS2
M8340101^1381%&	1,380		C,H,K,M,V	B, D	A, B	DAL,IRC2,TEC,VIS,VIS2
	Resistance	Power	Char.	Res.		
Part Number	Value (Ohms)	Rating	(^)	Tolerance	Schematic	Manufacturer
M8340101^1401%&	1,400		C,H,K,M,V	B, D, F	A, B	DAL,IRC2,TEC,VIS,VIS2
M8340101^1421%&	1,420		C,H,K,M,V	B, D	A, B	DAL,IRC2,TEC,VIS,VIS2
M8340101^1431%&	1,430	See PN Ordering Section	C,H,K,M,V	B, D, F	A, B	DAL,IRC2,TEC,VIS,VIS2
M8340101^1451%&	1,450		C,H,K,M,V	B, D	A, B	DAL,IRC2,TEC,VIS,VIS2
M8340101^1471%&	1,470		C,H,K,M,V	B, D, F	A, B	DAL,IRC2,TEC,VIS,VIS2

M8340101^1491%&	1,490		C,H,K,M,V	B, D	A, B	DAL,IRC2,TEC,VIS,VIS2
M8340101^1501%&	1,500		C,H,K,M,V	B, D, F, G, J	A, B	DAL,IRC2,TEC,VIS,VIS2
M8340101^1521%&	1,520	See PN Ordering Section	C,H,K,M,V	B, D	A, B	DAL,IRC2,TEC,VIS,VIS2
M8340101^1541%&	1,540		C,H,K,M,V	B, D, F	A, B	DAL,IRC2,TEC,VIS,VIS2
M8340101^1561%&	1,560		C,H,K,M,V	B, D	A, B	DAL,IRC2,TEC,VIS,VIS2
M8340101^1581%&	1,580		C,H,K,M,V	B, D, F	A, B	DAL,IRC2,TEC,VIS,VIS2
M8340101^1601%&	1,600		C,H,K,M,V	B, D, G, J	A, B	DAL,IRC2,TEC,VIS,VIS2
M8340101^1621%&	1,620	See PN Ordering Section	C,H,K,M,V	B, D, F	A, B	DAL,IRC2,TEC,VIS,VIS2
M8340101^1641%&	1,640		C,H,K,M,V	B, D	A, B	DAL,IRC2,TEC,VIS,VIS2
	Resistance	Power	Char.	Res.		
Part Number	Value (Ohms)	Rating	(^)	Tolerance	Schematic	Manufacturer
M8340101^1651%&	1,650		C,H,K,M,V	B, D, F	A, B	DAL,IRC2,TEC,VIS,VIS2
M8340101^1671%&	1,670		C,H,K,M,V	B, D	A, B	DAL,IRC2,TEC,VIS,VIS2
M8340101^1691%&	1,690		C,H,K,M,V	B, D, F	A, B	DAL,IRC2,TEC,VIS,VIS2
M8340101^1721%&	1,720	See PN Ordering Section	C,H,K,M,V	B, D	A, B	DAL,IRC2,TEC,VIS,VIS2
M8340101^1741%&	1,740		C,H,K,M,V	B, D, F	A, B	DAL,IRC2,TEC,VIS,VIS2
M8340101^1761%&	1,760		C,H,K,M,V	B, D	A, B	DAL,IRC2,TEC,VIS,VIS2
M8340101^1781%&	1,780		C,H,K,M,V	B, D, F	A, B	DAL,IRC2,TEC,VIS,VIS2
M8340101^1801%&	1,800		C,H,K,M,V	B, D, G, J	A, B	DAL,IRC2,TEC,VIS,VIS2
M8340101^1821%&	1,820	See PN Ordering Section	C,H,K,M,V	B, D, F	A, B	DAL,IRC2,TEC,VIS,VIS2
M8340101^1841%&	1,840		C,H,K,M,V	B, D	A, B	DAL,IRC2,TEC,VIS,VIS2
M8340101^1871%&	1,870		C,H,K,M,V	B, D, F	A, B	DAL,IRC2,TEC,VIS,VIS2
M8340101^1891%&	1,890		C,H,K,M,V	B, D	A, B	DAL,IRC2,TEC,VIS,VIS2
M8340101^1911%&	1,910		C,H,K,M,V	B, D, F	A, B	DAL,IRC2,TEC,VIS,VIS2
M8340101^1931%&	1,930	See PN Ordering Section	C,H,K,M,V	B, D	A, B	DAL,IRC2,TEC,VIS,VIS2
	Resistance	Power	Char.	Res.		
Part Number	Value (Ohms)	Rating	(^)	Tolerance	Schematic	Manufacturer
M8340101^1961%&	1,960		C,H,K,M,V	B, D, F	A, B	DAL,IRC2,TEC,VIS,VIS2
M8340101^1981%&	1,980		C,H,K,M,V	B, D	A, B	DAL,IRC2,TEC,VIS,VIS2
M8340101^2001%&	2,000		C,H,K,M,V	B, D, F, G, J	A, B	DAL,IRC2,TEC,VIS,VIS2
M8340101^2031%&	2,030		C,H,K,M,V	B, D	A, B	DAL,IRC2,TEC,VIS,VIS2
M8340101^2051%&	2,050	See PN Ordering Section	C,H,K,M,V	B, D, F	A, B	DAL,IRC2,TEC,VIS,VIS2
M8340101^2081%&	2,080		C,H,K,M,V	B, D	A, B	DAL,IRC2,TEC,VIS,VIS2
M8340101^2101%&	2,100		C,H,K,M,V	B, D, F	A, B	DAL,IRC2,TEC,VIS,VIS2
M8340101^2131%&	2,130		C,H,K,M,V	B, D	A, B	DAL,IRC2,TEC,VIS,VIS2
M8340101^2151%&	2,150		C,H,K,M,V	B, D, F	A, B	DAL,IRC2,TEC,VIS,VIS2
M8340101^2181%&	2,180	See PN Ordering Section	C,H,K,M,V	B, D	A, B	DAL,IRC2,TEC,VIS,VIS2
M8340101^2201%&	2,200		C,H,K,M,V	G, J	A, B	DAL,IRC2,TEC,VIS,VIS2
M8340101^2211%&	2,210		C,H,K,M,V	B, D, F	A, B	DAL,IRC2,TEC,VIS,VIS2
M8340101^2231%&	2,230		C,H,K,M,V	B, D	A, B	DAL,IRC2,TEC,VIS,VIS2
M8340101^2261%&	2,260		C,H,K,M,V	B, D, F	A, B	DAL,IRC2,TEC,VIS,VIS2
	Resistance	Power	Char.	Res.		
Part Number	Value (Ohms)	Rating	(^)	Tolerance	Schematic	Manufacturer
M8340101^2291%&	2,290	See PN Ordering Section	C,H,K,M,V	B, D	A, B	DAL,IRC2,TEC,VIS,VIS2
M8340101^2321%&	2,320		C,H,K,M,V	B, D, F	A, B	DAL,IRC2,TEC,VIS,VIS2
M8340101^2341%&	2,340		C,H,K,M,V	B, D	A, B	DAL,IRC2,TEC,VIS,VIS2
M8340101^2371%&	2,370		C,H,K,M,V	B, D, F	A, B	DAL,IRC2,TEC,VIS,VIS2

M8340101^2401%&	2,400		C,H,K,M,V	B, D, F, G, J	A, B	DAL,IRC2,TEC,VIS,VIS2
M8340101^2431%&	2,430	See PN Ordering Section	C,H,K,M,V	B, D, F	A, B	DAL,IRC2,TEC,VIS,VIS2
M8340101^2461%&	2,460		C,H,K,M,V	B, D	A, B	DAL,IRC2,TEC,VIS,VIS2
M8340101^2491%&	2,490		C,H,K,M,V	B, D, F	A, B	DAL,IRC2,TEC,VIS,VIS2
M8340101^2521%&	2,520		C,H,K,M,V	B, D	A, B	DAL,IRC2,TEC,VIS,VIS2
M8340101^2551%&	2,550		C,H,K,M,V	B, D, F	A, B	DAL,IRC2,TEC,VIS,VIS2
M8340101^2581%&	2,580	See PN Ordering Section	C,H,K,M,V	B, D	A, B	DAL,IRC2,TEC,VIS,VIS2
M8340101^2611%&	2,610		C,H,K,M,V	B, D, F	A, B	DAL,IRC2,TEC,VIS,VIS2
M8340101^2641%&	2,640		C,H,K,M,V	B, D	A, B	DAL,IRC2,TEC,VIS,VIS2
M8340101^2671%&	2,670		C,H,K,M,V	B, D, F	A, B	DAL,IRC2,TEC,VIS,VIS2
	Resistance	Power	Char.	Res.		
Part Number	Value (Ohms)	Rating	(^)	Tolerance	Schematic	Manufacturer
M8340101^2701%&	2,700		C,H,K,M,V	G, J	A, B	DAL,IRC2,TEC,VIS,VIS2
M8340101^2711%&	2,710	See PN Ordering Section	C,H,K,M,V	B, D	A, B	DAL,IRC2,TEC,VIS,VIS2
M8340101^2741%&	2,740		C,H,K,M,V	B, D, F	A, B	DAL,IRC2,TEC,VIS,VIS2
M8340101^2771%&	2,770		C,H,K,M,V	B, D	A, B	DAL,IRC2,TEC,VIS,VIS2
M8340101^2801%&	2,800		C,H,K,M,V	B, D, F	A, B	DAL,IRC2,TEC,VIS,VIS2
M8340101^2841%&	2,840		C,H,K,M,V	B, D	A, B	DAL,IRC2,TEC,VIS,VIS2
M8340101^2871%&	2,870	See PN Ordering Section	C,H,K,M,V	B, D, F	A, B	DAL,IRC2,TEC,VIS,VIS2
M8340101^2911%&	2,910		C,H,K,M,V	B, D	A, B	DAL,IRC2,TEC,VIS,VIS2
M8340101^2941%&	2,940		C,H,K,M,V	B, D, F	A, B	DAL,IRC2,TEC,VIS,VIS2
M8340101^2981%&	2,980		C,H,K,M,V	B, D	A, B	DAL,IRC2,TEC,VIS,VIS2
M8340101^3001%&	3,000		C,H,K,M,V	G, J	A, B	DAL,IRC2,TEC,VIS,VIS2
M8340101^3011%&	3,010	See PN Ordering Section	C,H,K,M,V	B, D, F	A, B	DAL,IRC2,TEC,VIS,VIS2
M8340101^3051%&	3,050		C,H,K,M,V	B, D	A, B	DAL,IRC2,TEC,VIS,VIS2
M8340101^3091%&	3,090		C,H,K,M,V	B, D, F	A, B	DAL,IRC2,TEC,VIS,VIS2
	Resistance	Power	Char.	Res.		
Part Number	Value (Ohms)	Rating	(^)	Tolerance	Schematic	Manufacturer
M8340101^3121%&	3,120		C,H,K,M,V	B, D	A, B	DAL,IRC2,TEC,VIS,VIS2
M8340101^3161%&	3,160		C,H,K,M,V	B, D, F	A, B	DAL,IRC2,TEC,VIS,VIS2
M8340101^3201%&	3,200	See PN Ordering Section	C,H,K,M,V	B, D	A, B	DAL,IRC2,TEC,VIS,VIS2
M8340101^3241%&	3,240		C,H,K,M,V	B, D, F	A, B	DAL,IRC2,TEC,VIS,VIS2
M8340101^3281%&	3,280		C,H,K,M,V	B, D	A, B	DAL,IRC2,TEC,VIS,VIS2
M8340101^3301%&	3,300		C,H,K,M,V	G, J	A, B	DAL,IRC2,TEC,VIS,VIS2
M8340101^3321%&	3,320		C,H,K,M,V	B, D, F	A, B	DAL,IRC2,TEC,VIS,VIS2
M8340101^3361%&	3,360	See PN Ordering Section	C,H,K,M,V	B, D	A, B	DAL,IRC2,TEC,VIS,VIS2
M8340101^3401%&	3,400		C,H,K,M,V	B, D, F	A, B	DAL,IRC2,TEC,VIS,VIS2
M8340101^3441%&	3,440		C,H,K,M,V	B, D	A, B	DAL,IRC2,TEC,VIS,VIS2
M8340101^3481%&	3,480		C,H,K,M,V	B, D, F	A, B	DAL,IRC2,TEC,VIS,VIS2
M8340101^3521%&	3,520		C,H,K,M,V	B, D	A, B	DAL,IRC2,TEC,VIS,VIS2
M8340101^3571%&	3,570	See PN Ordering Section	C,H,K,M,V	B, D, F	A, B	DAL,IRC2,TEC,VIS,VIS2
M8340101^3601%&	3,600		C,H,K,M,V	G, J	A, B	DAL,IRC2,TEC,VIS,VIS2
	Resistance	Power	Char.	Res.		
Part Number	Value (Ohms)	Rating	(^)	Tolerance	Schematic	Manufacturer
M8340101^3611%&	3,610		C,H,K,M,V	B, D	A, B	DAL,IRC2,TEC,VIS,VIS2
M8340101^3651%&	3,650		C,H,K,M,V	B, D, F	A, B	DAL,IRC2,TEC,VIS,VIS2
M8340101^3701%&	3,700		C,H,K,M,V	B, D	A, B	DAL,IRC2,TEC,VIS,VIS2

M8340101^3741%&	3,740	See PN Ordering Section	C,H,K,M,V	B, D, F	A, B	DAL,IRC2,TEC,VIS,VIS2
M8340101^3791%&	3,790		C,H,K,M,V	B, D	A, B	DAL,IRC2,TEC,VIS,VIS2
M8340101^3831%&	3,830		C,H,K,M,V	B, D, F	A, B	DAL,IRC2,TEC,VIS,VIS2
M8340101^3881%&	3,880		C,H,K,M,V	B, D	A, B	DAL,IRC2,TEC,VIS,VIS2
M8340101^3901%&	3,900		C,H,K,M,V	G, J	A, B	DAL,IRC2,TEC,VIS,VIS2
M8340101^3921%&	3,920	See PN Ordering Section	C,H,K,M,V	B, D, F	A, B	DAL,IRC2,TEC,VIS,VIS2
M8340101^3971%&	3,970		C,H,K,M,V	B, D	A, B	DAL,IRC2,TEC,VIS,VIS2
M8340101^4021%&	4,020		C,H,K,M,V	B, D, F	A, B	DAL,IRC2,TEC,VIS,VIS2
M8340101^4071%&	4,070		C,H,K,M,V	B, D	A, B	DAL,IRC2,TEC,VIS,VIS2
M8340101^4121%&	4,120		C,H,K,M,V	B, D, F	A, B	DAL,IRC2,TEC,VIS,VIS2
M8340101^4171%&	4,170	See PN Ordering Section	C,H,K,M,V	B, D	A, B	DAL,IRC2,TEC,VIS,VIS2
	Resistance	Power	Char.	Res.		
Part Number	Value (Ohms)	Rating	(^)	Tolerance	Schematic	Manufacturer
M8340101^4221%&	4,220		C,H,K,M,V	B, D, F	A, B	DAL,IRC2,TEC,VIS,VIS2
M8340101^4271%&	4,270		C,H,K,M,V	B, D	A, B	DAL,IRC2,TEC,VIS,VIS2
M8340101^4301%&	4,300		C,H,K,M,V	G, J	A, B	DAL,IRC2,TEC,VIS,VIS2
M8340101^4321%&	4,320		C,H,K,M,V	B, D, F	A, B	DAL,IRC2,TEC,VIS,VIS2
M8340101^4371%&	4,370	See PN Ordering Section	C,H,K,M,V	B, D	A, B	DAL,IRC2,TEC,VIS,VIS2
M8340101^4421%&	4,420		C,H,K,M,V	B, D, F	A, B	DAL,IRC2,TEC,VIS,VIS2
M8340101^4481%&	4,480		C,H,K,M,V	B, D	A, B	DAL,IRC2,TEC,VIS,VIS2
M8340101^4531%&	4,530		C,H,K,M,V	B, D, F	A, B	DAL,IRC2,TEC,VIS,VIS2
M8340101^4591%&	4,590		C,H,K,M,V	B, D	A, B	DAL,IRC2,TEC,VIS,VIS2
M8340101^4641%&	4,640	See PN Ordering Section	C,H,K,M,V	B, D, F	A, B	DAL,IRC2,TEC,VIS,VIS2
M8340101^4701%&	4,700		C,H,K,M,V	B, D, G, J	A, B	DAL,IRC2,TEC,VIS,VIS2
M8340101^4751%&	4,750		C,H,K,M,V	B, D, F	A, B	DAL,IRC2,TEC,VIS,VIS2
M8340101^4811%&	4,810		C,H,K,M,V	B, D	A, B	DAL,IRC2,TEC,VIS,VIS2
M8340101^4871%&	4,870		C,H,K,M,V	B, D, F	A, B	DAL,IRC2,TEC,VIS,VIS2
	Resistance	Power	Char.	Res.		
Part Number	Value (Ohms)	Rating	(^)	Tolerance	Schematic	Manufacturer
M8340101^4931%&	4,930	See PN Ordering Section	C,H,K,M,V	B, D	A, B	DAL,IRC2,TEC,VIS,VIS2
M8340101^4991%&	4,990		C,H,K,M,V	B, D, F	A, B	DAL,IRC2,TEC,VIS,VIS2
M8340101^5051%&	5,050		C,H,K,M,V	B, D	A, B	DAL,IRC2,TEC,VIS,VIS2
M8340101^5101%&	5,100		C,H,K,M,V	G, J	A, B	DAL,IRC2,TEC,VIS,VIS2
M8340101^5111%&	5,110		C,H,K,M,V	B, D, F	A, B	DAL,IRC2,TEC,VIS,VIS2
M8340101^5171%&	5,170	See PN Ordering Section	C,H,K,M,V	B, D	A, B	DAL,IRC2,TEC,VIS,VIS2
M8340101^5231%&	5,230		C,H,K,M,V	B, D, F	A, B	DAL,IRC2,TEC,VIS,VIS2
M8340101^5301%&	5,300		C,H,K,M,V	B, D	A, B	DAL,IRC2,TEC,VIS,VIS2
M8340101^5361%&	5,360		C,H,K,M,V	B, D, F	A, B	DAL,IRC2,TEC,VIS,VIS2
M8340101^5421%&	5,420		C,H,K,M,V	B, D	A, B	DAL,IRC2,TEC,VIS,VIS2
M8340101^5491%&	5,490	See PN Ordering Section	C,H,K,M,V	B, D, F	A, B	DAL,IRC2,TEC,VIS,VIS2
M8340101^5561%&	5,560		C,H,K,M,V	B, D	A, B	DAL,IRC2,TEC,VIS,VIS2
M8340101^5601%&	5,600		C,H,K,M,V	G, J	A, B	DAL,IRC2,TEC,VIS,VIS2
M8340101^5621%&	5,620		C,H,K,M,V	B, D, F	A, B	DAL,IRC2,TEC,VIS,VIS2
	Resistance	Power	Char.	Res.		
Part Number	Value (Ohms)	Rating	(^)	Tolerance	Schematic	Manufacturer
M8340101^5691%&	5,690		C,H,K,M,V	B, D	A, B	DAL,IRC2,TEC,VIS,VIS2
M8340101^5761%&	5,760	See PN Ordering Section	C,H,K,M,V	B, D, F	A, B	DAL,IRC2,TEC,VIS,VIS2

M8340101^5831%&	5,830		C,H,K,M,V	B, D	A, B	DAL,IRC2,TEC,VIS,VIS2
M8340101^5901%&	5,900		C,H,K,M,V	B, D, F	A, B	DAL,IRC2,TEC,VIS,VIS2
M8340101^5971%&	5,970		C,H,K,M,V	B, D	A, B	DAL,IRC2,TEC,VIS,VIS2
M8340101^6041%&	6,040		C,H,K,M,V	B, D, F	A, B	DAL,IRC2,TEC,VIS,VIS2
M8340101^6121%&	6,120	See PN Ordering Section	C,H,K,M,V	B, D	A, B	DAL,IRC2,TEC,VIS,VIS2
M8340101^6191%&	6,190		C,H,K,M,V	B, D, F	A, B	DAL,IRC2,TEC,VIS,VIS2
M8340101^6201%&	6,200		C,H,K,M,V	G, J	A, B	DAL,IRC2,TEC,VIS,VIS2
M8340101^6261%&	6,260		C,H,K,M,V	B, D	A, B	DAL,IRC2,TEC,VIS,VIS2
M8340101^6341%&	6,340		C,H,K,M,V	B, D, F	A, B	DAL,IRC2,TEC,VIS,VIS2
M8340101^6421%&	6,420	See PN Ordering Section	C,H,K,M,V	B, D	A, B	DAL,IRC2,TEC,VIS,VIS2
M8340101^6491%&	6,490		C,H,K,M,V	B, D, F	A, B	DAL,IRC2,TEC,VIS,VIS2
M8340101^6571%&	6,570		C,H,K,M,V	B, D	A, B	DAL,IRC2,TEC,VIS,VIS2
	Resistance	Power	Char.	Res.		
Part Number	Value (Ohms)	Rating	(^)	Tolerance	Schematic	Manufacturer
M8340101^6651%&	6,650		C,H,K,M,V	B, D, F	A, B	DAL,IRC2,TEC,VIS,VIS2
M8340101^6731%&	6,730		C,H,K,M,V	B, D	A, B	DAL,IRC2,TEC,VIS,VIS2
M8340101^6801%&	6,800	See PN Ordering Section	C,H,K,M,V	G, J	A, B	DAL,IRC2,TEC,VIS,VIS2
M8340101^6811%&	6,810		C,H,K,M,V	B, D, F	A, B	DAL,IRC2,TEC,VIS,VIS2
M8340101^6901%&	6,900		C,H,K,M,V	B, D	A, B	DAL,IRC2,TEC,VIS,VIS2
M8340101^6981%&	6,980		C,H,K,M,V	B, D, F	A, B	DAL,IRC2,TEC,VIS,VIS2
M8340101^7061%&	7,060		C,H,K,M,V	B, D	A, B	DAL,IRC2,TEC,VIS,VIS2
M8340101^7151%&	7,150	See PN Ordering Section	C,H,K,M,V	B, D, F	A, B	DAL,IRC2,TEC,VIS,VIS2
M8340101^7231%&	7,230		C,H,K,M,V	B, D	A, B	DAL,IRC2,TEC,VIS,VIS2
M8340101^7321%&	7,320		C,H,K,M,V	B, D, F	A, B	DAL,IRC2,TEC,VIS,VIS2
M8340101^7411%&	7,410		C,H,K,M,V	B, D	A, B	DAL,IRC2,TEC,VIS,VIS2
M8340101^7501%&	7,500		C,H,K,M,V	B, D, F, G, J	A, B	DAL,IRC2,TEC,VIS,VIS2
M8340101^7591%&	7,590	See PN Ordering Section	C,H,K,M,V	B, D	A, B	DAL,IRC2,TEC,VIS,VIS2
M8340101^7681%&	7,680		C,H,K,M,V	B, D, F	A, B	DAL,IRC2,TEC,VIS,VIS2
	Resistance	Power	Char.	Res.		
Part Number	Value (Ohms)	Rating	(^)	Tolerance	Schematic	Manufacturer
M8340101^7771%&	7,770		C,H,K,M,V	B, D	A, B	DAL,IRC2,TEC,VIS,VIS2
M8340101^7871%&	7,870		C,H,K,M,V	B, D, F	A, B	DAL,IRC2,TEC,VIS,VIS2
M8340101^7961%&	7,960		C,H,K,M,V	B, D	A, B	DAL,IRC2,TEC,VIS,VIS2
M8340101^8061%&	8,060	See PN Ordering Section	C,H,K,M,V	B, D, F	A, B	DAL,IRC2,TEC,VIS,VIS2
M8340101^8161%&	8,160		C,H,K,M,V	B, D	A, B	DAL,IRC2,TEC,VIS,VIS2
M8340101^8201%&	8,200		C,H,K,M,V	G, J	A, B	DAL,IRC2,TEC,VIS,VIS2
M8340101^8251%&	8,250		C,H,K,M,V	B, D, F	A, B	DAL,IRC2,TEC,VIS,VIS2
M8340101^8351%&	8,350		C,H,K,M,V	B, D	A, B	DAL,IRC2,TEC,VIS,VIS2
M8340101^8451%&	8,450	See PN Ordering Section	C,H,K,M,V	B, D, F	A, B	DAL,IRC2,TEC,VIS,VIS2
M8340101^8561%&	8,560		C,H,K,M,V	B, D	A, B	DAL,IRC2,TEC,VIS,VIS2
M8340101^8661%&	8,660		C,H,K,M,V	B, D, F	A, B	DAL,IRC2,TEC,VIS,VIS2
M8340101^8761%&	8,760		C,H,K,M,V	B, D	A, B	DAL,IRC2,TEC,VIS,VIS2
M8340101^8871%&	8,870		C,H,K,M,V	B, D, F	A, B	DAL,IRC2,TEC,VIS,VIS2
M8340101^8981%&	8,980	See PN Ordering Section	C,H,K,M,V	B, D	A, B	DAL,IRC2,TEC,VIS,VIS2
	Resistance	Power	Char.	Res.		
Part Number	Value (Ohms)	Rating	(^)	Tolerance	Schematic	Manufacturer
M8340101^9091%&	9,090		C,H,K,M,V	B, D, F	A, B	DAL,IRC2,TEC,VIS,VIS2

M8340101^9101%&	9,100		C,H,K,M,V	G, J	A, B	DAL,IRC2,TEC,VIS,VIS2
M8340101^9201%&	9,200		C,H,K,M,V	B, D	A, B	DAL,IRC2,TEC,VIS,VIS2
M8340101^9311%&	9,310		C,H,K,M,V	B, D, F	A, B	DAL,IRC2,TEC,VIS,VIS2
M8340101^9421%&	9,420	See PN Ordering Section	C,H,K,M,V	B, D	A, B	DAL,IRC2,TEC,VIS,VIS2
M8340101^9531%&	9,530		C,H,K,M,V	B, D, F	A, B	DAL,IRC2,TEC,VIS,VIS2
M8340101^9651%&	9,650		C,H,K,M,V	B, D	A, B	DAL,IRC2,TEC,VIS,VIS2
M8340101^9761%&	9,760		C,H,K,M,V	B, D, F	A, B	DAL,IRC2,TEC,VIS,VIS2
M8340101^9881%&	9,880		C,H,K,M,V	B, D	A, B	DAL,IRC2,TEC,VIS,VIS2
	Resistance	Power	Char.	Res.		
Part Number	Value (Ohms)	Rating	(^)	Tolerance	Schematic	Manufacturer

MIL-PRF-83401/1 (RZ010) Film Resistor Networks: 10,000 Ohms Through 98,800 Ohms

	Resistance	Power	Char.	Res.		
Part Number	Value (Ohms)	Rating	(^)	Tolerance	Schematic	Manufacturer
M8340101^1002%&	10,000	See PN Ordering Section	C,H,K,M,V	B, D, F, G, J	A, B	DAL,IRC2,TEC,VIS,VIS2
M8340101^1012%&	10,100		C,H,K,M,V	B, D	A, B	DAL,IRC2,TEC
M8340101^1022%&	10,200		C,H,K,M,V	B, D, F	A, B	DAL,IRC2,TEC
M8340101^1042%&	10,400		C,H,K,M,V	B, D	A, B	DAL,IRC2,TEC
M8340101^1052%&	10,500		C,H,K,M,V	B, D, F	A, B	DAL,IRC2,TEC
M8340101^1062%&	10,600	See PN Ordering Section	C,H,K,M,V	B, D	A, B	DAL,IRC2,TEC
M8340101^1072%&	10,700		C,H,K,M,V	B, D, F	A, B	DAL,IRC2,TEC
M8340101^1092%&	10,900		C,H,K,M,V	B, D	A, B	DAL,IRC2,TEC
M8340101^1102%&	11,000		C,H,K,M,V	B, D, F, G, J	A, B	DAL,IRC2,TEC
M8340101^1112%&	11,100		C,H,K,M,V	B, D	A, B	DAL,IRC2,TEC
M8340101^1132%&	11,300	See PN Ordering Section	C,H,K,M,V	B, D, F	A, B	DAL,IRC2,TEC
M8340101^1142%&	11,400		C,H,K,M,V	B, D	A, B	DAL,IRC2,TEC
M8340101^1152%&	11,500		C,H,K,M,V	B, D, F	A, B	DAL,IRC2,TEC
M8340101^1172%&	11,700		C,H,K,M,V	B, D	A, B	DAL,IRC2,TEC
	Resistance	Power	Char.	Res.		
Part Number	Value (Ohms)	Rating	(^)	Tolerance	Schematic	Manufacturer
M8340101^1182%&	11,800		C,H,K,M,V	B, D, F	A, B	DAL,IRC2,TEC
M8340101^1202%&	12,000	See PN Ordering Section	C,H,K,M,V	B, D, F, G, J	A, B	DAL,IRC2,TEC
M8340101^1212%&	12,100		C,H,K,M,V	B, D, F	A, B	DAL,IRC2,TEC
M8340101^1232%&	12,300		C,H,K,M,V	B, D	A, B	DAL,IRC2,TEC
M8340101^1242%&	12,400		C,H,K,M,V	B, D, F	A, B	DAL,IRC2,TEC
M8340101^1262%&	12,600		C,H,K,M,V	B, D	A, B	DAL,IRC2,TEC
M8340101^1272%&	12,700	See PN Ordering Section	C,H,K,M,V	B, D, F	A, B	DAL,IRC2,TEC
M8340101^1292%&	12,900		C,H,K,M,V	B, D	A, B	DAL,IRC2,TEC
M8340101^1302%&	13,000		C,H,K,M,V	B, D, F, G, J	A, B	DAL,IRC2,TEC
M8340101^1322%&	13,200		C,H,K,M,V	B, D	A, B	DAL,IRC2,TEC
M8340101^1332%&	13,300		C,H,K,M,V	B, D, F	A, B	DAL,IRC2,TEC
M8340101^1352%&	13,500	See PN Ordering Section	C,H,K,M,V	B, D	A, B	DAL,IRC2,TEC
M8340101^1372%&	13,700		C,H,K,M,V	B, D, F	A, B	DAL,IRC2,TEC
M8340101^1382%&	13,800		C,H,K,M,V	B, D	A, B	DAL,IRC2,TEC

	Resistance	Power	Char.	Res.		
Part Number	Value (Ohms)	Rating	(^)	Tolerance	Schematic	Manufacturer
M8340101^1402%&	14,000		C,H,K,M,V	B, D, F	A, B	DAL,IRC2,TEC
M8340101^1422%&	14,200		C,H,K,M,V	B, D	A, B	DAL,IRC2,TEC
M8340101^1432%&	14,300	See PN Ordering Section	C,H,K,M,V	B, D, F	A, B	DAL,IRC2,TEC
M8340101^1452%&	14,500		C,H,K,M,V	B, D	A, B	DAL,IRC2,TEC
M8340101^1472%&	14,700		C,H,K,M,V	B, D, F	A, B	DAL,IRC2,TEC
M8340101^1492%&	14,900		C,H,K,M,V	B, D	A, B	DAL,IRC2,TEC
M8340101^1502%&	15,000		C,H,K,M,V	B, D, F, G, J	A, B	DAL,IRC2,TEC
M8340101^1522%&	15,200	See PN Ordering Section	C,H,K,M,V	B, D	A, B	DAL,IRC2,TEC
M8340101^1542%&	15,400		C,H,K,M,V	B, D, F	A, B	DAL,IRC2,TEC
M8340101^1562%&	15,600		C,H,K,M,V	B, D	A, B	DAL,IRC2,TEC
M8340101^1582%&	15,800		C,H,K,M,V	B, D, F	A, B	DAL,IRC2,TEC
M8340101^1602%&	16,000		C,H,K,M,V	B, D, G, J	A, B	DAL,IRC2,TEC
M8340101^1622%&	16,200	See PN Ordering Section	C,H,K,M,V	B, D, F	A, B	DAL,IRC2,TEC
M8340101^1642%&	16,400		C,H,K,M,V	B, D	A, B	DAL,IRC2,TEC
	Resistance	Power	Char.	Res.		
Part Number	Value (Ohms)	Rating	(^)	Tolerance	Schematic	Manufacturer
M8340101^1652%&	16,500		C,H,K,M,V	B, D, F	A, B	DAL,IRC2,TEC
M8340101^1672%&	16,700		C,H,K,M,V	B, D	A, B	DAL,IRC2,TEC
M8340101^1692%&	16,900		C,H,K,M,V	B, D, F	A, B	DAL,IRC2,TEC
M8340101^1722%&	17,200	See PN Ordering Section	C,H,K,M,V	B, D	A, B	DAL,IRC2,TEC
M8340101^1742%&	17,400		C,H,K,M,V	B, D, F	A, B	DAL,IRC2,TEC
M8340101^1762%&	17,600		C,H,K,M,V	B, D	A, B	DAL,IRC2,TEC
M8340101^1782%&	17,800		C,H,K,M,V	B, D, F	A, B	DAL,IRC2,TEC
M8340101^1802%&	18,000		C,H,K,M,V	B, D, G, J	A, B	DAL,IRC2,TEC
M8340101^1822%&	18,200	See PN Ordering Section	C,H,K,M,V	B, D, F	A, B	DAL,IRC2,TEC
M8340101^1842%&	18,400		C,H,K,M,V	B, D	A, B	DAL,IRC2,TEC
M8340101^1872%&	18,700		C,H,K,M,V	B, D, F	A, B	DAL,IRC2,TEC
M8340101^1892%&	18,900		C,H,K,M,V	B, D	A, B	DAL,IRC2,TEC
M8340101^1912%&	19,100		C,H,K,M,V	B, D, F	A, B	DAL,IRC2,TEC
M8340101^1932%&	19,300	See PN Ordering Section	C,H,K,M,V	B, D	A, B	DAL,IRC2,TEC
	Resistance	Power	Char.	Res.		
Part Number	Value (Ohms)	Rating	(^)	Tolerance	Schematic	Manufacturer
M8340101^1962%&	19,600		C,H,K,M,V	B, D, F	A, B	DAL,IRC2,TEC
M8340101^1982%&	19,800		C,H,K,M,V	B, D	A, B	DAL,IRC2,TEC
M8340101^2002%&	20,000		C,H,K,M,V	B, D, F, G, J	A, B	DAL,IRC2,TEC
M8340101^2032%&	20,300		C,H,K,M,V	B, D	A, B	DAL,IRC2,TEC
M8340101^2052%&	20,500	See PN Ordering Section	C,H,K,M,V	B, D, F	A, B	DAL,IRC2,TEC
M8340101^2082%&	20,800		C,H,K,M,V	B, D	A, B	DAL,IRC2,TEC
M8340101^2102%&	21,000		C,H,K,M,V	B, D, F	A, B	DAL,IRC2,TEC
M8340101^2132%&	21,300		C,H,K,M,V	B, D	A, B	DAL,IRC2,TEC
M8340101^2152%&	21,500		C,H,K,M,V	B, D, F	A, B	DAL,IRC2,TEC
M8340101^2182%&	21,800	See PN Ordering Section	C,H,K,M,V	B, D	A, B	DAL,IRC2,TEC
M8340101^2202%&	22,000		C,H,K,M,V	G, J	A, B	DAL,IRC2,TEC
M8340101^2212%&	22,100		C,H,K,M,V	B, D, F	A, B	DAL,IRC2,TEC
M8340101^2232%&	22,300		C,H,K,M,V	B, D	A, B	DAL,IRC2,TEC

M8340101^2262%&	22,600		C,H,K,M,V	B, D, F	A, B	DAL,IRC2,TEC
	Resistance	Power	Char.	Res.		
Part Number	Value (Ohms)	Rating	(^)	Tolerance	Schematic	Manufacturer
M8340101^2292%&	22,900	See PN Ordering Section	C,H,K,M,V	B, D	A, B	DAL,IRC2,TEC
M8340101^2322%&	23,200		C,H,K,M,V	B, D, F	A, B	DAL,IRC2,TEC
M8340101^2342%&	23,400		C,H,K,M,V	B, D	A, B	DAL,IRC2,TEC
M8340101^2372%&	23,700		C,H,K,M,V	B, D, F	A, B	DAL,IRC2,TEC
M8340101^2402%&	24,000		C,H,K,M,V	B, D, F, G, J	A, B	DAL,IRC2,TEC
M8340101^2432%&	24,300	See PN Ordering Section	C,H,K,M,V	B, D, F	A, B	DAL,IRC2,TEC
M8340101^2462%&	24,600		C,H,K,M,V	B, D	A, B	DAL,IRC2,TEC
M8340101^2492%&	24,900		C,H,K,M,V	B, D, F	A, B	DAL,IRC2,TEC
M8340101^2522%&	25,200		C,H,K,M,V	B, D	A, B	DAL,IRC2,TEC
M8340101^2552%&	25,500		C,H,K,M,V	B, D, F	A, B	DAL,IRC2,TEC
M8340101^2582%&	25,800	See PN Ordering Section	C,H,K,M,V	B, D	A, B	DAL,IRC2,TEC
M8340101^2612%&	26,100		C,H,K,M,V	B, D, F	A, B	DAL,IRC2,TEC
M8340101^2642%&	26,400		C,H,K,M,V	B, D	A, B	DAL,IRC2,TEC
M8340101^2672%&	26,700		C,H,K,M,V	B, D, F	A, B	DAL,IRC2,TEC
	Resistance	Power	Char.	Res.		
Part Number	Value (Ohms)	Rating	(^)	Tolerance	Schematic	Manufacturer
M8340101^2702%&	27,000		C,H,K,M,V	G, J	A, B	DAL,IRC2,TEC
M8340101^2712%&	27,100	See PN Ordering Section	C,H,K,M,V	B, D	A, B	DAL,IRC2,TEC
M8340101^2742%&	27,400		C,H,K,M,V	B, D, F	A, B	DAL,IRC2,TEC
M8340101^2772%&	27,700		C,H,K,M,V	B, D	A, B	DAL,IRC2,TEC
M8340101^2802%&	28,000		C,H,K,M,V	B, D, F	A, B	DAL,IRC2,TEC
M8340101^2842%&	28,400		C,H,K,M,V	B, D	A, B	DAL,IRC2,TEC
M8340101^2872%&	28,700	See PN Ordering Section	C,H,K,M,V	B, D, F	A, B	DAL,IRC2,TEC
M8340101^2912%&	29,100		C,H,K,M,V	B, D	A, B	DAL,IRC2,TEC
M8340101^2942%&	29,400		C,H,K,M,V	B, D, F	A, B	DAL,IRC2,TEC
M8340101^2982%&	29,800		C,H,K,M,V	B, D	A, B	DAL,IRC2,TEC
M8340101^3002%&	30,000		C,H,K,M,V	G, J	A, B	DAL,IRC2,TEC
M8340101^3012%&	30,100	See PN Ordering Section	C,H,K,M,V	B, D, F	A, B	DAL,IRC2,TEC
M8340101^3052%&	30,500		C,H,K,M,V	B, D	A, B	DAL,IRC2,TEC
M8340101^3092%&	30,900		C,H,K,M,V	B, D, F	A, B	DAL,IRC2,TEC
	Resistance	Power	Char.	Res.		
Part Number	Value (Ohms)	Rating	(^)	Tolerance	Schematic	Manufacturer
M8340101^3122%&	31,200		C,H,K,M,V	B, D	A, B	DAL,IRC2,TEC
M8340101^3162%&	31,600		C,H,K,M,V	B, D, F	A, B	DAL,IRC2,TEC
M8340101^3202%&	32,000	See PN Ordering Section	C,H,K,M,V	B, D	A, B	DAL,IRC2,TEC
M8340101^3242%&	32,400		C,H,K,M,V	B, D, F	A, B	DAL,IRC2,TEC
M8340101^3282%&	32,800		C,H,K,M,V	B, D	A, B	DAL,IRC2,TEC
M8340101^3302%&	33,000		C,H,K,M,V	G, J	A, B	DAL,IRC2,TEC
M8340101^3322%&	33,200		C,H,K,M,V	B, D, F	A, B	DAL,IRC2,TEC
M8340101^3362%&	33,600	See PN Ordering Section	C,H,K,M,V	B, D	A, B	DAL,IRC2,TEC
M8340101^3402%&	34,000		C,H,K,M,V	B, D, F	A, B	DAL,IRC2,TEC
M8340101^3442%&	34,400		C,H,K,M,V	B, D	A, B	DAL,IRC2,TEC
M8340101^3482%&	34,800		C,H,K,M,V	B, D, F	A, B	DAL,IRC2,TEC
M8340101^3522%&	35,200		C,H,K,M,V	B, D	A, B	DAL,IRC2,TEC

M8340101^3572%&	35,700	See PN Ordering Section	C,H,K,M,V	B, D, F	A, B	DAL,IRC2,TEC
M8340101^3602%&	36,000		C,H,K,M,V	G, J	A, B	DAL,IRC2,TEC
	Resistance	Power	Char.	Res.		
Part Number	Value (Ohms)	Rating	(^)	Tolerance	Schematic	Manufacturer
M8340101^3612%&	36,100		C,H,K,M,V	B, D	A, B	DAL,IRC2,TEC
M8340101^3652%&	36,500		C,H,K,M,V	B, D, F	A, B	DAL,IRC2,TEC
M8340101^3702%&	37,000		C,H,K,M,V	B, D	A, B	DAL,IRC2,TEC
M8340101^3742%&	37,400	See PN Ordering Section	C,H,K,M,V	B, D, F	A, B	DAL,IRC2,TEC
M8340101^3792%&	37,900		C,H,K,M,V	B, D	A, B	DAL,IRC2,TEC
M8340101^3832%&	38,300		C,H,K,M,V	B, D, F	A, B	DAL,IRC2,TEC
M8340101^3882%&	38,800		C,H,K,M,V	B, D	A, B	DAL,IRC2,TEC
M8340101^3902%&	39,000		C,H,K,M,V	G, J	A, B	DAL,IRC2,TEC
M8340101^3922%&	39,200	See PN Ordering Section	C,H,K,M,V	B, D, F	A, B	DAL,IRC2,TEC
M8340101^3972%&	39,700		C,H,K,M,V	B, D	A, B	DAL,IRC2,TEC
M8340101^4022%&	40,200		C,H,K,M,V	B, D, F	A, B	DAL,IRC2,TEC
M8340101^4072%&	40,700		C,H,K,M,V	B, D	A, B	DAL,IRC2,TEC
M8340101^4122%&	41,200		C,H,K,M,V	B, D, F	A, B	DAL,IRC2,TEC
M8340101^4172%&	41,700	See PN Ordering Section	C,H,K,M,V	B, D	A, B	DAL,IRC2,TEC
	Resistance	Power	Char.	Res.		
Part Number	Value (Ohms)	Rating	(^)	Tolerance	Schematic	Manufacturer
M8340101^4222%&	42,200		C,H,K,M,V	B, D, F	A, B	DAL,IRC2,TEC
M8340101^4272%&	42,700		C,H,K,M,V	B, D	A, B	DAL,IRC2,TEC
M8340101^4302%&	43,000		C,H,K,M,V	G, J	A, B	DAL,IRC2,TEC
M8340101^4322%&	43,200		C,H,K,M,V	B, D, F	A, B	DAL,IRC2,TEC
M8340101^4372%&	43,700	See PN Ordering Section	C,H,K,M,V	B, D	A, B	DAL,IRC2,TEC
M8340101^4422%&	44,200		C,H,K,M,V	B, D, F	A, B	DAL,IRC2,TEC
M8340101^4482%&	44,800		C,H,K,M,V	B, D	A, B	DAL,IRC2,TEC
M8340101^4532%&	45,300		C,H,K,M,V	B, D, F	A, B	DAL,IRC2,TEC
M8340101^4592%&	45,900		C,H,K,M,V	B, D	A, B	DAL,IRC2,TEC
M8340101^4642%&	46,400	See PN Ordering Section	C,H,K,M,V	B, D, F	A, B	DAL,IRC2,TEC
M8340101^4702%&	47,000		C,H,K,M,V	B, D, G, J	A, B	DAL,IRC2,TEC
M8340101^4752%&	47,500		C,H,K,M,V	B, D, F	A, B	DAL,IRC2,TEC
M8340101^4812%&	48,100		C,H,K,M,V	B, D	A, B	DAL,IRC2,TEC
M8340101^4872%&	48,700		C,H,K,M,V	B, D, F	A, B	DAL,IRC2,TEC
	Resistance	Power	Char.	Res.		
Part Number	Value (Ohms)	Rating	(^)	Tolerance	Schematic	Manufacturer
M8340101^4932%&	49,300	See PN Ordering Section	C,H,K,M,V	B, D	A, B	DAL,IRC2,TEC
M8340101^4992%&	49,900		C,H,K,M,V	B, D, F	A, B	DAL,IRC2,TEC
M8340101^5052%&	50,500		C,H,K,M,V	B, D	A, B	DAL,IRC2,TEC
M8340101^5102%&	51,000		C,H,K,M,V	G, J	A, B	DAL,IRC2,TEC
M8340101^5112%&	51,100		C,H,K,M,V	B, D, F	A, B	DAL,IRC2,TEC
M8340101^5172%&	51,700	See PN Ordering Section	C,H,K,M,V	B, D	A, B	DAL,IRC2,TEC
M8340101^5232%&	52,300		C,H,K,M,V	B, D, F	A, B	DAL,IRC2,TEC
M8340101^5302%&	53,000		C,H,K,M,V	B, D	A, B	DAL,IRC2,TEC
M8340101^5362%&	53,600		C,H,K,M,V	B, D, F	A, B	DAL,IRC2,TEC
M8340101^5422%&	54,200		C,H,K,M,V	B, D	A, B	DAL,IRC2,TEC
M8340101^5492%&	54,900	See PN Ordering Section	C,H,K,M,V	B, D, F	A, B	DAL,IRC2,TEC

M8340101^5562%&	55,600		C,H,K,M,V	B, D	A, B	DAL,IRC2,TEC
M8340101^5602%&	56,000		C,H,K,M,V	G, J	A, B	DAL,IRC2,TEC
M8340101^5622%&	56,200		C,H,K,M,V	B, D, F	A, B	DAL,IRC2,TEC
	Resistance	Power	Char.	Res.		
Part Number	Value (Ohms)	Rating	(^)	Tolerance	Schematic	Manufacturer
M8340101^5692%&	56,900		C,H,K,M,V	B, D	A, B	DAL,IRC2,TEC
M8340101^5762%&	57,600	See PN Ordering Section	C,H,K,M,V	B, D, F	A, B	DAL,IRC2,TEC
M8340101^5832%&	58,300		C,H,K,M,V	B, D	A, B	DAL,IRC2,TEC
M8340101^5902%&	59,000		C,H,K,M,V	B, D, F	A, B	DAL,IRC2,TEC
M8340101^5972%&	59,700		C,H,K,M,V	B, D	A, B	DAL,IRC2,TEC
M8340101^6042%&	60,400		C,H,K,M,V	B, D, F	A, B	DAL,IRC2,TEC
M8340101^6122%&	61,200	See PN Ordering Section	C,H,K,M,V	B, D	A, B	DAL,IRC2,TEC
M8340101^6192%&	61,900		C,H,K,M,V	B, D, F	A, B	DAL,IRC2,TEC
M8340101^6202%&	62,000		C,H,K,M,V	G, J	A, B	DAL,IRC2,TEC
M8340101^6262%&	62,600		C,H,K,M,V	B, D	A, B	DAL,IRC2,TEC
M8340101^6342%&	63,400		C,H,K,M,V	B, D, F	A, B	DAL,IRC2,TEC
M8340101^6422%&	64,200	See PN Ordering Section	C,H,K,M,V	B, D	A, B	DAL,IRC2,TEC
M8340101^6492%&	64,900		C,H,K,M,V	B, D, F	A, B	DAL,IRC2,TEC
M8340101^6572%&	65,700		C,H,K,M,V	B, D	A, B	DAL,IRC2,TEC
	Resistance	Power	Char.	Res.		
Part Number	Value (Ohms)	Rating	(^)	Tolerance	Schematic	Manufacturer
M8340101^6652%&	66,500		C,H,K,M,V	B, D, F	A, B	DAL,IRC2,TEC
M8340101^6732%&	67,300		C,H,K,M,V	B, D	A, B	DAL,IRC2,TEC
M8340101^6802%&	68,000	See PN Ordering Section	C,H,K,M,V	G, J	A, B	DAL,IRC2,TEC
M8340101^6812%&	68,100		C,H,K,M,V	B, D, F	A, B	DAL,IRC2,TEC
M8340101^6902%&	69,000		C,H,K,M,V	B, D	A, B	DAL,IRC2,TEC
M8340101^6982%&	69,800		C,H,K,M,V	B, D, F	A, B	DAL,IRC2,TEC
M8340101^7062%&	70,600		C,H,K,M,V	B, D	A, B	DAL,IRC2,TEC
M8340101^7152%&	71,500	See PN Ordering Section	C,H,K,M,V	B, D, F	A, B	DAL,IRC2,TEC
M8340101^7232%&	72,300		C,H,K,M,V	B, D	A, B	DAL,IRC2,TEC
M8340101^7322%&	73,200		C,H,K,M,V	B, D, F	A, B	DAL,IRC2,TEC
M8340101^7412%&	74,100		C,H,K,M,V	B, D	A, B	DAL,IRC2,TEC
M8340101^7502%&	75,000		C,H,K,M,V	B, D, F, G, J	A, B	DAL,IRC2,TEC
M8340101^7592%&	75,900	See PN Ordering Section	C,H,K,M,V	B, D	A, B	DAL,IRC2,TEC
M8340101^7682%&	76,800		C,H,K,M,V	B, D, F	A, B	DAL,IRC2,TEC
	Resistance	Power	Char.	Res.		
Part Number	Value (Ohms)	Rating	(^)	Tolerance	Schematic	Manufacturer
M8340101^7772%&	77,700		C,H,K,M,V	B, D	A, B	DAL,IRC2,TEC
M8340101^7872%&	78,700		C,H,K,M,V	B, D, F	A, B	DAL,IRC2,TEC
M8340101^7962%&	79,600		C,H,K,M,V	B, D	A, B	DAL,IRC2,TEC
M8340101^8062%&	80,600	See PN Ordering Section	C,H,K,M,V	B, D, F	A, B	DAL,IRC2,TEC
M8340101^8162%&	81,600		C,H,K,M,V	B, D	A, B	DAL,IRC2,TEC
M8340101^8202%&	82,000		C,H,K,M,V	G, J	A, B	DAL,IRC2,TEC
M8340101^8252%&	82,500		C,H,K,M,V	B, D, F	A, B	DAL,IRC2,TEC
M8340101^8352%&	83,500		C,H,K,M,V	B, D	A, B	DAL,IRC2,TEC
M8340101^8452%&	84,500	See PN Ordering Section	C,H,K,M,V	B, D, F	A, B	DAL,IRC2,TEC
M8340101^8562%&	85,600		C,H,K,M,V	B, D	A, B	DAL,IRC2,TEC

M8340101^8662%&	86,600		C,H,K,M,V	B, D, F	A, B	DAL,IRC2,TEC
M8340101^8762%&	87,600		C,H,K,M,V	B, D	A, B	DAL,IRC2,TEC
M8340101^8872%&	88,700		C,H,K,M,V	B, D, F	A, B	DAL,IRC2,TEC
M8340101^8982%&	89,800	See PN Ordering Section	C,H,K,M,V	B, D	A, B	DAL,IRC2,TEC
	Resistance	Power	Char.	Res.		
Part Number	Value (Ohms)	Rating	(^)	Tolerance	Schematic	Manufacturer
M8340101^9092%&	90,900		C,H,K,M,V	B, D, F	A, B	DAL,IRC2,TEC
M8340101^9102%&	91,000		C,H,K,M,V	G, J	A, B	DAL,IRC2,TEC
M8340101^9202%&	92,000		C,H,K,M,V	B, D	A, B	DAL,IRC2,TEC
M8340101^9312%&	93,100		C,H,K,M,V	B, D, F	A, B	DAL,IRC2,TEC
M8340101^9422%&	94,200	See PN Ordering Section	C,H,K,M,V	B, D	A, B	DAL,IRC2,TEC
M8340101^9532%&	95,300		C,H,K,M,V	B, D, F	A, B	DAL,IRC2,TEC
M8340101^9652%&	96,500		C,H,K,M,V	B, D	A, B	DAL,IRC2,TEC
M8340101^9762%&	97,600		C,H,K,M,V	B, D, F	A, B	DAL,IRC2,TEC
M8340101^9882%&	98,800		C,H,K,M,V	B, D	A, B	DAL,IRC2,TEC
	Resistance	Power	Char.	Res.		
Part Number	Value (Ohms)	Rating	(^)	Tolerance	Schematic	Manufacturer

MIL-PRF-83401/1 (RZ010) Film Resistor Networks: 100,000 Ohms Through 1,000,000 Ohms

	Resistance	Power	Char.	Res.		
Part Number	Value (Ohms)	Rating	(^)	Tolerance	Schematic	Manufacturer
M8340101^1003%&	100,000	See PN Ordering Section	C,H,K,M,V	B, D, F, G, J	A, B	DAL,IRC2,TEC
M8340101^1013%&	101,000		C,H,K,M,V	B, D	A, B	DAL
M8340101^1023%&	102,000		C,H,K,M,V	B, D, F	A, B	DAL
M8340101^1043%&	104,000		C,H,K,M,V	B, D	A, B	DAL
M8340101^1053%&	105,000		C,H,K,M,V	B, D, F	A, B	DAL
M8340101^1063%&	106,000	See PN Ordering Section	C,H,K,M,V	B, D	A, B	DAL
M8340101^1073%&	107,000		C,H,K,M,V	B, D, F	A, B	DAL
M8340101^1093%&	109,000		C,H,K,M,V	B, D	A, B	DAL
M8340101^1103%&	110,000		C,H,K,M,V	B, D, F, G, J	A, B	DAL
M8340101^1113%&	111,000		C,H,K,M,V	B, D	A, B	DAL
M8340101^1133%&	113,000	See PN Ordering Section	C,H,K,M,V	B, D, F	A, B	DAL
M8340101^1143%&	114,000		C,H,K,M,V	B, D	A, B	DAL
M8340101^1153%&	115,000		C,H,K,M,V	B, D, F	A, B	DAL
M8340101^1173%&	117,000		C,H,K,M,V	B, D	A, B	DAL
	Resistance	Power	Char.	Res.		
Part Number	Value (Ohms)	Rating	(^)	Tolerance	Schematic	Manufacturer
M8340101^1183%&	118,000		C,H,K,M,V	B, D, F	A, B	DAL
M8340101^1203%&	120,000	See PN Ordering Section	C,H,K,M,V	B, D, F, G, J	A, B	DAL
M8340101^1213%&	121,000		C,H,K,M,V	B, D, F	A, B	DAL
M8340101^1233%&	123,000		C,H,K,M,V	B, D	A, B	DAL
M8340101^1243%&	124,000		C,H,K,M,V	B, D, F	A, B	DAL
M8340101^1263%&	126,000		C,H,K,M,V	B, D	A, B	DAL
M8340101^1273%&	127,000	See PN Ordering Section	C,H,K,M,V	B, D, F	A, B	DAL

M8340101^1293%&	129,000		C,H,K,M,V	B, D	A, B	DAL
M8340101^1303%&	130,000		C,H,K,M,V	B, D, F, G, J	A, B	DAL
M8340101^1323%&	132,000		C,H,K,M,V	B, D	A, B	DAL
M8340101^1333%&	133,000		C,H,K,M,V	B, D, F	A, B	DAL
M8340101^1353%&	135,000	See PN Ordering Section	C,H,K,M,V	B, D	A, B	DAL
M8340101^1373%&	137,000		C,H,K,M,V	B, D, F	A, B	DAL
M8340101^1383%&	138,000		C,H,K,M,V	B, D	A, B	DAL
	Resistance	Power	Char.	Res.		
Part Number	Value (Ohms)	Rating	(^)	Tolerance	Schematic	Manufacturer
M8340101^1403%&	140,000		C,H,K,M,V	B, D, F	A, B	DAL
M8340101^1423%&	142,000		C,H,K,M,V	B, D	A, B	DAL
M8340101^1433%&	143,000	See PN Ordering Section	C,H,K,M,V	B, D, F	A, B	DAL
M8340101^1453%&	145,000		C,H,K,M,V	B, D	A, B	DAL
M8340101^1473%&	147,000		C,H,K,M,V	B, D, F	A, B	DAL
M8340101^1493%&	149,000		C,H,K,M,V	B, D	A, B	DAL
M8340101^1503%&	150,000		C,H,K,M,V	B, D, F, G, J	A, B	DAL
M8340101^1523%&	152,000	See PN Ordering Section	C,H,K,M,V	B, D	A, B	DAL
M8340101^1543%&	154,000		C,H,K,M,V	B, D, F	A, B	DAL
M8340101^1563%&	156,000		C,H,K,M,V	B, D	A, B	DAL
M8340101^1583%&	158,000		C,H,K,M,V	B, D, F	A, B	DAL
M8340101^1603%&	160,000		C,H,K,M,V	B, D, G, J	A, B	DAL
M8340101^1623%&	162,000	See PN Ordering Section	C,H,K,M,V	B, D, F	A, B	DAL
M8340101^1643%&	164,000		C,H,K,M,V	B, D	A, B	DAL
	Resistance	Power	Char.	Res.		
Part Number	Value (Ohms)	Rating	(^)	Tolerance	Schematic	Manufacturer
M8340101^1653%&	165,000		C,H,K,M,V	B, D, F	A, B	DAL
M8340101^1673%&	167,000		C,H,K,M,V	B, D	A, B	DAL
M8340101^1693%&	169,000		C,H,K,M,V	B, D, F	A, B	DAL
M8340101^1723%&	172,000	See PN Ordering Section	C,H,K,M,V	B, D	A, B	DAL
M8340101^1743%&	174,000		C,H,K,M,V	B, D, F	A, B	DAL
M8340101^1763%&	176,000		C,H,K,M,V	B, D	A, B	DAL
M8340101^1783%&	178,000		C,H,K,M,V	B, D, F	A, B	DAL
M8340101^1803%&	180,000		C,H,K,M,V	B, D, G, J	A, B	DAL
M8340101^1823%&	182,000	See PN Ordering Section	C,H,K,M,V	B, D, F	A, B	DAL
M8340101^1843%&	184,000		C,H,K,M,V	B, D	A, B	DAL
M8340101^1873%&	187,000		C,H,K,M,V	B, D, F	A, B	DAL
M8340101^1893%&	189,000		C,H,K,M,V	B, D	A, B	DAL
M8340101^1913%&	191,000		C,H,K,M,V	B, D, F	A, B	DAL
M8340101^1933%&	193,000	See PN Ordering Section	C,H,K,M,V	B, D	A, B	DAL
	Resistance	Power	Char.	Res.		
Part Number	Value (Ohms)	Rating	(^)	Tolerance	Schematic	Manufacturer
M8340101^1963%&	196,000		C,H,K,M,V	B, D, F	A, B	DAL
M8340101^1983%&	198,000		C,H,K,M,V	B, D	A, B	DAL
M8340101^2003%&	200,000		C,H,K,M,V	B, D, F, G, J	A, B	DAL
M8340101^2033%&	203,000		C,H,K,M,V	B, D	A, B	DAL
M8340101^2053%&	205,000	See PN Ordering Section	C,H,K,M,V	B, D, F	A, B	DAL
M8340101^2083%&	208,000		C,H,K,M,V	B, D	A, B	DAL

M8340101^2103%&	210,000		C,H,K,M,V	B, D, F	A, B	DAL
M8340101^2133%&	213,000		C,H,K,M,V	B, D	A, B	DAL
M8340101^2153%&	215,000		C,H,K,M,V	B, D, F	A, B	DAL
M8340101^2183%&	218,000	See PN Ordering Section	C,H,K,M,V	B, D	A, B	DAL
M8340101^2203%&	220,000		C,H,K,M,V	G, J	A, B	DAL
M8340101^2213%&	221,000		C,H,K,M,V	B, D, F	A, B	DAL
M8340101^2233%&	223,000		C,H,K,M,V	B, D	A, B	DAL
M8340101^2263%&	226,000		C,H,K,M,V	B, D, F	A, B	DAL
	Resistance	Power	Char.	Res.		
Part Number	Value (Ohms)	Rating	(^)	Tolerance	Schematic	Manufacturer
M8340101^2293%&	229,000	See PN Ordering Section	C,H,K,M,V	B, D	A, B	DAL
M8340101^2323%&	232,000		C,H,K,M,V	B, D, F	A, B	DAL
M8340101^2343%&	234,000		C,H,K,M,V	B, D	A, B	DAL
M8340101^2373%&	237,000		C,H,K,M,V	B, D, F	A, B	DAL
M8340101^2403%&	240,000		C,H,K,M,V	B, D, F, G, J	A, B	DAL
M8340101^2433%&	243,000	See PN Ordering Section	C,H,K,M,V	B, D, F	A, B	DAL
M8340101^2463%&	246,000		C,H,K,M,V	B, D	A, B	DAL
M8340101^2493%&	249,000		C,H,K,M,V	B, D, F	A, B	DAL
M8340101^2523%&	252,000		C,H,K,M,V	B, D	A, B	DAL
M8340101^2553%&	255,000		C,H,K,M,V	B, D, F	A, B	DAL
M8340101^2583%&	258,000	See PN Ordering Section	C,H,K,M,V	B, D	A, B	DAL
M8340101^2613%&	261,000		C,H,K,M,V	B, D, F	A, B	DAL
M8340101^2643%&	264,000		C,H,K,M,V	B, D	A, B	DAL
M8340101^2673%&	267,000		C,H,K,M,V	B, D, F	A, B	DAL
	Resistance	Power	Char.	Res.		
Part Number	Value (Ohms)	Rating	(^)	Tolerance	Schematic	Manufacturer
M8340101^2703%&	270,000		C,H,K,M,V	G, J	A, B	DAL
M8340101^2713%&	271,000	See PN Ordering Section	C,H,K,M,V	B, D	A, B	DAL
M8340101^2743%&	274,000		C,H,K,M,V	B, D, F	A, B	DAL
M8340101^2773%&	277,000		C,H,K,M,V	B, D	A, B	DAL
M8340101^2803%&	280,000		C,H,K,M,V	B, D, F	A, B	DAL
M8340101^2843%&	284,000		C,H,K,M,V	B, D	A, B	DAL
M8340101^2873%&	287,000	See PN Ordering Section	C,H,K,M,V	B, D, F	A, B	DAL
M8340101^2913%&	291,000		C,H,K,M,V	B, D	A, B	DAL
M8340101^2943%&	294,000		C,H,K,M,V	B, D, F	A, B	DAL
M8340101^2983%&	298,000		C,H,K,M,V	B, D	A, B	DAL
M8340101^3003%&	300,000		C,H,K,M,V	G, J	A, B	DAL
M8340101^3013%&	301,000	See PN Ordering Section	C,H,K,M,V	B, D, F	A, B	DAL
M8340101^3053%&	305,000		C,H,K,M,V	B, D	A, B	DAL
M8340101^3093%&	309,000		C,H,K,M,V	B, D, F	A, B	DAL
	Resistance	Power	Char.	Res.		
Part Number	Value (Ohms)	Rating	(^)	Tolerance	Schematic	Manufacturer
M8340101^3123%&	312,000		C,H,K,M,V	B, D	A, B	DAL
M8340101^3163%&	316,000		C,H,K,M,V	B, D, F	A, B	DAL
M8340101^3203%&	320,000	See PN Ordering Section	C,H,K,M,V	B, D	A, B	DAL
M8340101^3243%&	324,000		C,H,K,M,V	B, D, F	A, B	DAL
M8340101^3283%&	328,000		C,H,K,M,V	B, D	A, B	DAL

M8340101^3303%&	330,000		C,H,K,M,V	G, J	A, B	DAL
M8340101^3323%&	332,000		C,H,K,M,V	B, D, F	A, B	DAL
M8340101^3363%&	336,000	See PN Ordering Section	C,H,K,M,V	B, D	A, B	DAL
M8340101^3403%&	340,000		C,H,K,M,V	B, D, F	A, B	DAL
M8340101^3443%&	344,000		C,H,K,M,V	B, D	A, B	DAL
M8340101^3483%&	348,000		C,H,K,M,V	B, D, F	A, B	DAL
M8340101^3523%&	352,000		C,H,K,M,V	B, D	A, B	DAL
M8340101^3573%&	357,000	See PN Ordering Section	C,H,K,M,V	B, D, F	A, B	DAL
M8340101^3603%&	360,000		C,H,K,M,V	G, J	A, B	DAL
	Resistance	Power	Char.	Res.		
Part Number	Value (Ohms)	Rating	(^)	Tolerance	Schematic	Manufacturer
M8340101^3613%&	361,000		C,H,K,M,V	B, D	A, B	DAL
M8340101^3653%&	365,000		C,H,K,M,V	B, D, F	A, B	DAL
M8340101^3703%&	370,000		C,H,K,M,V	B, D	A, B	DAL
M8340101^3743%&	374,000	See PN Ordering Section	C,H,K,M,V	B, D, F	A, B	DAL
M8340101^3793%&	379,000		C,H,K,M,V	B, D	A, B	DAL
M8340101^3833%&	383,000		C,H,K,M,V	B, D, F	A, B	DAL
M8340101^3883%&	388,000		C,H,K,M,V	B, D	A, B	DAL
M8340101^3903%&	390,000		C,H,K,M,V	G, J	A, B	DAL
M8340101^3923%&	392,000	See PN Ordering Section	C,H,K,M,V	B, D, F	A, B	DAL
M8340101^3973%&	397,000		C,H,K,M,V	B, D	A, B	DAL
M8340101^4023%&	402,000		C,H,K,M,V	B, D, F	A, B	DAL
M8340101^4073%&	407,000		C,H,K,M,V	B, D	A, B	DAL
M8340101^4123%&	412,000		C,H,K,M,V	B, D, F	A, B	DAL
M8340101^4173%&	417,000	See PN Ordering Section	C,H,K,M,V	B, D	A, B	DAL
	Resistance	Power	Char.	Res.		
Part Number	Value (Ohms)	Rating	(^)	Tolerance	Schematic	Manufacturer
M8340101^4223%&	422,000		C,H,K,M,V	B, D, F	A, B	DAL
M8340101^4273%&	427,000		C,H,K,M,V	B, D	A, B	DAL
M8340101^4303%&	430,000		C,H,K,M,V	G, J	A, B	DAL
M8340101^4323%&	432,000		C,H,K,M,V	B, D, F	A, B	DAL
M8340101^4373%&	437,000	See PN Ordering Section	C,H,K,M,V	B, D	A, B	DAL
M8340101^4423%&	442,000		C,H,K,M,V	B, D, F	A, B	DAL
M8340101^4483%&	448,000		C,H,K,M,V	B, D	A, B	DAL
M8340101^4533%&	453,000		C,H,K,M,V	B, D, F	A, B	DAL
M8340101^4593%&	459,000		C,H,K,M,V	B, D	A, B	DAL
M8340101^4643%&	464,000	See PN Ordering Section	C,H,K,M,V	B, D, F	A, B	DAL
M8340101^4703%&	470,000		C,H,K,M,V	B, D, G, J	A, B	DAL
M8340101^4753%&	475,000		C,H,K,M,V	B, D, F	A, B	DAL
M8340101^4813%&	481,000		C,H,K,M,V	B, D	A, B	DAL
M8340101^4873%&	487,000		C,H,K,M,V	B, D, F	A, B	DAL
	Resistance	Power	Char.	Res.		
Part Number	Value (Ohms)	Rating	(^)	Tolerance	Schematic	Manufacturer
M8340101^4933%&	493,000	See PN Ordering Section	C,H,K,M,V	B, D	A, B	DAL
M8340101^4993%&	499,000		C,H,K,M,V	B, D, F	A, B	DAL
M8340101^5053%&	505,000		C,H,K,M,V	B, D	A, B	DAL
M8340101^5103%&	510,000		C,H,K,M,V	G, J	A, B	DAL

M8340101^5113%&	511,000		C,H,K,M,V	B, D, F	A, B	DAL
M8340101^5173%&	517,000	See PN Ordering Section	C,H,K,M,V	B, D	A, B	DAL
M8340101^5233%&	523,000		C,H,K,M,V	B, D, F	A, B	DAL
M8340101^5303%&	530,000		C,H,K,M,V	B, D	A, B	DAL
M8340101^5363%&	536,000		C,H,K,M,V	B, D, F	A, B	DAL
M8340101^5423%&	542,000		C,H,K,M,V	B, D	A, B	DAL
M8340101^5493%&	549,000	See PN Ordering Section	C,H,K,M,V	B, D, F	A, B	DAL
M8340101^5563%&	556,000		C,H,K,M,V	B, D	A, B	DAL
M8340101^5603%&	560,000		C,H,K,M,V	G, J	A, B	DAL
M8340101^5623%&	562,000		C,H,K,M,V	B, D, F	A, B	DAL
	Resistance	Power	Char.	Res.		
Part Number	Value (Ohms)	Rating	(^)	Tolerance	Schematic	Manufacturer
M8340101^5693%&	569,000		C,H,K,M,V	B, D	A, B	DAL
M8340101^5763%&	576,000	See PN Ordering Section	C,H,K,M,V	B, D, F	A, B	DAL
M8340101^5833%&	583,000		C,H,K,M,V	B, D	A, B	DAL
M8340101^5903%&	590,000		C,H,K,M,V	B, D, F	A, B	DAL
M8340101^5973%&	597,000		C,H,K,M,V	B, D	A, B	DAL
M8340101^6043%&	604,000		C,H,K,M,V	B, D, F	A, B	DAL
M8340101^6123%&	612,000	See PN Ordering Section	C,H,K,M,V	B, D	A, B	DAL
M8340101^6193%&	619,000		C,H,K,M,V	B, D, F	A, B	DAL
M8340101^6203%&	620,000		C,H,K,M,V	G, J	A, B	DAL
M8340101^6263%&	626,000		C,H,K,M,V	B, D	A, B	DAL
M8340101^6343%&	634,000		C,H,K,M,V	B, D, F	A, B	DAL
M8340101^6423%&	642,000	See PN Ordering Section	C,H,K,M,V	B, D	A, B	DAL
M8340101^6493%&	649,000		C,H,K,M,V	B, D, F	A, B	DAL
M8340101^6573%&	657,000		C,H,K,M,V	B, D	A, B	DAL
	Resistance	Power	Char.	Res.		
Part Number	Value (Ohms)	Rating	(^)	Tolerance	Schematic	Manufacturer
M8340101^6653%&	665,000		C,H,K,M,V	B, D, F	A, B	DAL
M8340101^6733%&	673,000		C,H,K,M,V	B, D	A, B	DAL
M8340101^6803%&	680,000	See PN Ordering Section	C,H,K,M,V	G, J	A, B	DAL
M8340101^6813%&	681,000		C,H,K,M,V	B, D, F	A, B	DAL
M8340101^6903%&	690,000		C,H,K,M,V	B, D	A, B	DAL
M8340101^6983%&	698,000		C,H,K,M,V	B, D, F	A, B	DAL
M8340101^7063%&	706,000		C,H,K,M,V	B, D	A, B	DAL
M8340101^7153%&	715,000	See PN Ordering Section	C,H,K,M,V	B, D, F	A, B	DAL
M8340101^7233%&	723,000		C,H,K,M,V	B, D	A, B	DAL
M8340101^7323%&	732,000		C,H,K,M,V	B, D, F	A, B	DAL
M8340101^7413%&	741,000		C,H,K,M,V	B, D	A, B	DAL
M8340101^7503%&	750,000		C,H,K,M,V	B, D, F, G, J	A, B	DAL
M8340101^7593%&	759,000	See PN Ordering Section	C,H,K,M,V	B, D	A, B	DAL
M8340101^7683%&	768,000		C,H,K,M,V	B, D, F	A, B	DAL
	Resistance	Power	Char.	Res.		
Part Number	Value (Ohms)	Rating	(^)	Tolerance	Schematic	Manufacturer
M8340101^7773%&	777,000		C,H,K,M,V	B, D	A, B	DAL
M8340101^7873%&	787,000		C,H,K,M,V	B, D, F	A, B	DAL
M8340101^7963%&	796,000		C,H,K,M,V	B, D	A, B	DAL

M8340101^8063%&	806,000	See PN Ordering Section	C,H,K,M,V	B, D, F	A, B	DAL
M8340101^8163%&	816,000		C,H,K,M,V	B, D	A, B	DAL
M8340101^8203%&	820,000		C,H,K,M,V	G, J	A, B	DAL
M8340101^8253%&	825,000		C,H,K,M,V	B, D, F	A, B	DAL
M8340101^8353%&	835,000		C,H,K,M,V	B, D	A, B	DAL
M8340101^8453%&	845,000	See PN Ordering Section	C,H,K,M,V	B, D, F	A, B	DAL
M8340101^8563%&	856,000		C,H,K,M,V	B, D	A, B	DAL
M8340101^8663%&	866,000		C,H,K,M,V	B, D, F	A, B	DAL
M8340101^8763%&	876,000		C,H,K,M,V	B, D	A, B	DAL
M8340101^8873%&	887,000		C,H,K,M,V	B, D, F	A, B	DAL
M8340101^8983%&	898,000	See PN Ordering Section	C,H,K,M,V	B, D	A, B	DAL
	Resistance	Power	Char.	Res.		
Part Number	Value (Ohms)	Rating	(^)	Tolerance	Schematic	Manufacturer
M8340101^9093%&	909,000		C,H,K,M,V	B, D, F	A, B	DAL
M8340101^9103%&	910,000		C,H,K,M,V	G, J	A, B	DAL
M8340101^9203%&	920,000		C,H,K,M,V	B, D	A, B	DAL
M8340101^9313%&	931,000		C,H,K,M,V	B, D, F	A, B	DAL
M8340101^9423%&	942,000	See PN Ordering Section	C,H,K,M,V	B, D	A, B	DAL
M8340101^9533%&	953,000		C,H,K,M,V	B, D, F	A, B	DAL
M8340101^9653%&	965,000		C,H,K,M,V	B, D	A, B	DAL
M8340101^9763%&	976,000		C,H,K,M,V	B, D, F	A, B	DAL
M8340101^9883%&	988,000		C,H,K,M,V	B, D	A, B	DAL
M8340101^1004%&	1,000,000	See PN Ordering Section	C,H,K,M,V	B, D, F, G, J	A, B	DAL
	Resistance	Power	Char.	Res.		
Part Number	Value (Ohms)	Rating	(^)	Tolerance	Schematic	Manufacturer

MIL-PRF-83401/2 (RZ020) Film Resistor Networks

10.0 Ohms Through 1,000,000 Ohms

	Resistance	Power	Char.	Res.		
Part Number	Value (Ohms)	Rating	(^)	Tolerance	Schematic	Manufacturer
M8340102^10R0%&	10.0	Link at Top	C,H,K,M,V	F, G, J	A, B	DAL
M8340102^10R2%&	10.2		C,H,K,M,V	F	A, B	DAL
M8340102^10R5%&	10.5		C,H,K,M,V	F	A, B	DAL
M8340102^10R7%&	10.7		C,H,K,M,V	F	A, B	DAL
M8340102^11R0%&	11.0		C,H,K,M,V	F, G, J	A, B	DAL
M8340102^11R3%&	11.3	Link at Top	C,H,K,M,V	F	A, B	DAL
M8340102^11R5%&	11.5		C,H,K,M,V	F	A, B	DAL
M8340102^11R8%&	11.8		C,H,K,M,V	F	A, B	DAL
M8340102^12R0%&	12.0		C,H,K,M,V	F, G, J	A, B	DAL
M8340102^12R1%&	12.1		C,H,K,M,V	F	A, B	DAL
M8340102^12R4%&	12.4	Link at Top	C,H,K,M,V	F	A, B	DAL
M8340102^12R7%&	12.7		C,H,K,M,V	F	A, B	DAL
M8340102^13R0%&	13.0		C,H,K,M,V	F, G, J	A, B	DAL
M8340102^13R3%&	13.3		C,H,K,M,V	F	A, B	DAL

M8340102^13R7%&	13.7		C,H,K,M,V	F	A, B	DAL
M8340102^14R0%&	14.0	Link at Top	C,H,K,M,V	F	A, B	DAL
M8340102^14R3%&	14.3		C,H,K,M,V	F	A, B	DAL
M8340102^14R7%&	14.7		C,H,K,M,V	F	A, B	DAL
M8340102^15R0%&	15.0		C,H,K,M,V	F, G, J	A, B	DAL
M8340102^15R4%&	15.4		C,H,K,M,V	F	A, B	DAL
M8340102^15R8%&	15.8	Link at Top	C,H,K,M,V	F	A, B	DAL
M8340102^16R0%&	16.0		C,H,K,M,V	G, J	A, B	DAL
M8340102^16R2%&	16.2		C,H,K,M,V	F	A, B	DAL
M8340102^16R5%&	16.5		C,H,K,M,V	F	A, B	DAL
M8340102^16R9%&	16.9		C,H,K,M,V	F	A, B	DAL
M8340102^17R4%&	17.4	Link at Top	C,H,K,M,V	F	A, B	DAL
M8340102^17R8%&	17.8		C,H,K,M,V	F	A, B	DAL
M8340102^18R0%&	18.0		C,H,K,M,V	G, J	A, B	DAL
M8340102^18R2%&	18.2		C,H,K,M,V	F	A, B	DAL
M8340102^18R7%&	18.7		C,H,K,M,V	F	A, B	DAL
M8340102^19R1%&	19.1	Link at Top	C,H,K,M,V	F	A, B	DAL
M8340102^19R6%&	19.6		C,H,K,M,V	F	A, B	DAL
M8340102^20R0%&	20.0		C,H,K,M,V	F, G, J	A, B	DAL
M8340102^20R5%&	20.5		C,H,K,M,V	F	A, B	DAL
M8340102^21R0%&	21.0		C,H,K,M,V	F	A, B	DAL
M8340102^21R5%&	21.5	Link at Top	C,H,K,M,V	F	A, B	DAL
M8340102^22R0%&	22.0		C,H,K,M,V	G, J	A, B	DAL
M8340102^22R1%&	22.1		C,H,K,M,V	F	A, B	DAL
M8340102^22R6%&	22.6		C,H,K,M,V	F	A, B	DAL
M8340102^23R2%&	23.2		C,H,K,M,V	F	A, B	DAL
M8340102^23R7%&	23.7	Link at Top	C,H,K,M,V	F	A, B	DAL
M8340102^24R0%&	24.0		C,H,K,M,V	F, G, J	A, B	DAL
M8340102^24R3%&	24.3		C,H,K,M,V	F	A, B	DAL
M8340102^24R9%&	24.9		C,H,K,M,V	F	A, B	DAL
M8340102^25R5%&	25.5		C,H,K,M,V	F	A, B	DAL
M8340102^26R1%&	26.1	Link at Top	C,H,K,M,V	F	A, B	DAL
M8340102^26R7%&	26.7		C,H,K,M,V	F	A, B	DAL
M8340102^27R0%&	27.0		C,H,K,M,V	G, J	A, B	DAL,TEC
M8340102^27R4%&	27.4		C,H,K,M,V	F	A, B	DAL,TEC
M8340102^28R0%&	28.0		C,H,K,M,V	F	A, B	DAL,TEC
M8340102^28R7%&	28.7	Link at Top	C,H,K,M,V	F	A, B	DAL,TEC
M8340102^29R4%&	29.4		C,H,K,M,V	F	A, B	DAL,TEC
M8340102^30R0%&	30.0		C,H,K,M,V	G, J	A, B	DAL,TEC
M8340102^30R1%&	30.1		C,H,K,M,V	F	A, B	DAL,TEC
M8340102^30R9%&	30.9		C,H,K,M,V	F	A, B	DAL,TEC
M8340102^31R6%&	31.6	Link at Top	C,H,K,M,V	F	A, B	DAL,TEC
M8340102^32R4%&	32.4		C,H,K,M,V	F	A, B	DAL,TEC
M8340102^33R0%&	33.0		C,H,K,M,V	G, J	A, B	DAL,TEC
M8340102^33R2%&	33.2		C,H,K,M,V	F	A, B	DAL,TEC
M8340102^34R0%&	34.0		C,H,K,M,V	F	A, B	DAL,TEC
M8340102^34R8%&	34.8	Link at Top	C,H,K,M,V	F	A, B	DAL,TEC

M8340102^35R7%&	35.7		C,H,K,M,V	F	A, B	DAL,TEC
M8340102^36R0%&	36.0		C,H,K,M,V	G, J	A, B	DAL,TEC
M8340102^36R5%&	36.5		C,H,K,M,V	F	A, B	DAL,TEC
M8340102^37R4%&	37.4		C,H,K,M,V	F	A, B	DAL,TEC
M8340102^38R3%&	38.3	Link at Top	C,H,K,M,V	F	A, B	DAL,TEC
M8340102^39R0%&	39.0		C,H,K,M,V	G, J	A, B	DAL,TEC
M8340102^39R2%&	39.2		C,H,K,M,V	F	A, B	DAL,TEC
M8340102^40R2%&	40.2		C,H,K,M,V	F	A, B	DAL,TEC
M8340102^41R2%&	41.2		C,H,K,M,V	F	A, B	DAL,TEC
M8340102^42R2%&	42.2	Link at Top	C,H,K,M,V	F	A, B	DAL,TEC
M8340102^43R0%&	43.0		C,H,K,M,V	G, J	A, B	DAL,TEC
M8340102^43R2%&	43.2		C,H,K,M,V	F	A, B	DAL,TEC
M8340102^44R2%&	44.2		C,H,K,M,V	F	A, B	DAL,TEC
M8340102^45R3%&	45.3		C,H,K,M,V	F	A, B	DAL,TEC
M8340102^46R4%&	46.4	Link at Top	C,H,K,M,V	F	A, B	DAL,TEC
M8340102^47R0%&	47.0		C,H,K,M,V	G, J	A, B	DAL,TEC
M8340102^47R5%&	47.5		C,H,K,M,V	F	A, B	DAL,TEC
M8340102^48R7%&	48.7		C,H,K,M,V	F	A, B	DAL,TEC
M8340102^49R9%&	49.9		C,H,K,M,V	F	A, B	DAL,TEC
M8340102^51R0%&	51.0	Link at Top	C,H,K,M,V	G, J	A, B	DAL,IRC2,TEC
M8340102^51R1%&	51.1		C,H,K,M,V	F	A, B	DAL,IRC2,TEC
M8340102^52R3%&	52.3		C,H,K,M,V	F	A, B	DAL,IRC2,TEC
M8340102^53R6%&	53.6		C,H,K,M,V	F	A, B	DAL,IRC2,TEC
M8340102^54R9%&	54.9		C,H,K,M,V	F	A, B	DAL,IRC2,TEC
M8340102^56R0%&	56.0	Link at Top	C,H,K,M,V	G, J	A, B	DAL,IRC2,TEC
M8340102^56R2%&	56.2		C,H,K,M,V	F	A, B	DAL,IRC2,TEC
M8340102^57R6%&	57.6		C,H,K,M,V	F	A, B	DAL,IRC2,TEC
M8340102^59R0%&	59.0		C,H,K,M,V	F	A, B	DAL,IRC2,TEC
M8340102^60R4%&	60.4		C,H,K,M,V	F	A, B	DAL,IRC2,TEC
M8340102^61R9%&	61.9	Link at Top	C,H,K,M,V	F	A, B	DAL,IRC2,TEC
M8340102^62R0%&	62.0		C,H,K,M,V	G, J	A, B	DAL,IRC2,TEC
M8340102^63R4%&	63.4		C,H,K,M,V	F	A, B	DAL,IRC2,TEC
M8340102^64R9%&	64.9		C,H,K,M,V	F	A, B	DAL,IRC2,TEC
M8340102^66R5%&	66.5		C,H,K,M,V	F	A, B	DAL,IRC2,TEC
M8340102^68R0%&	68.0	Link at Top	C,H,K,M,V	G, J	A, B	DAL,IRC2,TEC
M8340102^68R1%&	68.1		C,H,K,M,V	F	A, B	DAL,IRC2,TEC
M8340102^69R8%&	69.8		C,H,K,M,V	F	A, B	DAL,IRC2,TEC
M8340102^71R5%&	71.5		C,H,K,M,V	F	A, B	DAL,IRC2,TEC
M8340102^73R2%&	73.2		C,H,K,M,V	F	A, B	DAL,IRC2,TEC
M8340102^75R0%&	75.0	Link at Top	C,H,K,M,V	F, G, J	A, B	DAL,IRC2,TEC
M8340102^76R8%&	76.8		C,H,K,M,V	F	A, B	DAL,IRC2,TEC
M8340102^78R7%&	78.7		C,H,K,M,V	F	A, B	DAL,IRC2,TEC
M8340102^80R6%&	80.6		C,H,K,M,V	F	A, B	DAL,IRC2,TEC
M8340102^82R0%&	82.0		C,H,K,M,V	G, J	A, B	DAL,IRC2,TEC
M8340102^82R5%&	82.5	Link at Top	C,H,K,M,V	F	A, B	DAL,IRC2,TEC
M8340102^84R5%&	84.5		C,H,K,M,V	F	A, B	DAL,IRC2,TEC
M8340102^86R6%&	86.6		C,H,K,M,V	F	A, B	DAL,IRC2,TEC

M8340102^88R7%&	88.7		C,H,K,M,V	F	A, B	DAL,IRC2,TEC
M8340102^90R9%&	90.9		C,H,K,M,V	F	A, B	DAL,IRC2,TEC
M8340102^91R0%&	91.0	Link at Top	C,H,K,M,V	G, J	A, B	DAL,IRC2,TEC
M8340102^93R1%&	93.1		C,H,K,M,V	F	A, B	DAL,IRC2,TEC
M8340102^95R3%&	95.3		C,H,K,M,V	F	A, B	DAL,IRC2,TEC
M8340102^97R6%&	97.6		C,H,K,M,V	F	A, B	DAL,IRC2,TEC
M8340102^1000%&	100		C,H,K,M,V	B, D, F, G, J	A, B	DAL,IRC2,TEC,VIS,VIS2
M8340102^1010%&	101	Link at Top	C,H,K,M,V	B, D	A, B	DAL,IRC2,TEC,VIS,VIS2
M8340102^1020%&	102		C,H,K,M,V	B, D, F	A, B	DAL,IRC2,TEC,VIS,VIS2
M8340102^1040%&	104		C,H,K,M,V	B, D	A, B	DAL,IRC2,TEC,VIS,VIS2
M8340102^1050%&	105		C,H,K,M,V	B, D, F	A, B	DAL,IRC2,TEC,VIS,VIS2
M8340102^1060%&	106		C,H,K,M,V	B, D	A, B	DAL,IRC2,TEC,VIS,VIS2
M8340102^1070%&	107	Link at Top	C,H,K,M,V	B, D, F	A, B	DAL,IRC2,TEC,VIS,VIS2
M8340102^1090%&	109		C,H,K,M,V	B, D	A, B	DAL,IRC2,TEC,VIS,VIS2
M8340102^1100%&	110		C,H,K,M,V	B, D, F, G, J	A, B	DAL,IRC2,TEC,VIS,VIS2
M8340102^1110%&	111		C,H,K,M,V	B, D	A, B	DAL,IRC2,TEC,VIS,VIS2
M8340102^1130%&	113		C,H,K,M,V	B, D, F	A, B	DAL,IRC2,TEC,VIS,VIS2
M8340102^1140%&	114	Link at Top	C,H,K,M,V	B, D	A, B	DAL,IRC2,TEC,VIS,VIS2
M8340102^1150%&	115		C,H,K,M,V	B, D, F	A, B	DAL,IRC2,TEC,VIS,VIS2
M8340102^1170%&	117		C,H,K,M,V	B, D	A, B	DAL,IRC2,TEC,VIS,VIS2
M8340102^1180%&	118		C,H,K,M,V	B, D, F	A, B	DAL,IRC2,TEC,VIS,VIS2
M8340102^1200%&	120		C,H,K,M,V	B, D, F, G, J	A, B	DAL,IRC2,TEC,VIS,VIS2
M8340102^1210%&	121	Link at Top	C,H,K,M,V	B, D, F	A, B	DAL,IRC2,TEC,VIS,VIS2
M8340102^1230%&	123		C,H,K,M,V	B, D	A, B	DAL,IRC2,TEC,VIS,VIS2
M8340102^1240%&	124		C,H,K,M,V	B, D, F	A, B	DAL,IRC2,TEC,VIS,VIS2
M8340102^1260%&	126		C,H,K,M,V	B, D	A, B	DAL,IRC2,TEC,VIS,VIS2
M8340102^1270%&	127		C,H,K,M,V	B, D, F	A, B	DAL,IRC2,TEC,VIS,VIS2
M8340102^1290%&	129	Link at Top	C,H,K,M,V	B, D	A, B	DAL,IRC2,TEC,VIS,VIS2
M8340102^1300%&	130		C,H,K,M,V	B, D, F, G, J	A, B	DAL,IRC2,TEC,VIS,VIS2
M8340102^1320%&	132		C,H,K,M,V	B, D	A, B	DAL,IRC2,TEC,VIS,VIS2
M8340102^1330%&	133		C,H,K,M,V	B, D, F	A, B	DAL,IRC2,TEC,VIS,VIS2
M8340102^1350%&	135	Link at Top	C,H,K,M,V	B, D	A, B	DAL,IRC2,TEC,VIS,VIS2
M8340102^1370%&	137		C,H,K,M,V	B, D, F	A, B	DAL,IRC2,TEC,VIS,VIS2
M8340102^1380%&	138		C,H,K,M,V	B, D	A, B	DAL,IRC2,TEC,VIS,VIS2
M8340102^1400%&	140		C,H,K,M,V	B, D, F	A, B	DAL,IRC2,TEC,VIS,VIS2
M8340102^1420%&	142		C,H,K,M,V	B, D	A, B	DAL,IRC2,TEC,VIS,VIS2
M8340102^1430%&	143	Link at Top	C,H,K,M,V	B, D, F	A, B	DAL,IRC2,TEC,VIS,VIS2
M8340102^1450%&	145		C,H,K,M,V	B, D	A, B	DAL,IRC2,TEC,VIS,VIS2
M8340102^1470%&	147		C,H,K,M,V	B, D, F	A, B	DAL,IRC2,TEC,VIS,VIS2
M8340102^1490%&	149		C,H,K,M,V	B, D	A, B	DAL,IRC2,TEC,VIS,VIS2
M8340102^1500%&	150		C,H,K,M,V	B, D, F, G, J	A, B	DAL,IRC2,TEC,VIS,VIS2
M8340102^1520%&	152	Link at Top	C,H,K,M,V	B, D	A, B	DAL,IRC2,TEC,VIS,VIS2
M8340102^1540%&	154		C,H,K,M,V	B, D, F	A, B	DAL,IRC2,TEC,VIS,VIS2
M8340102^1560%&	156		C,H,K,M,V	B, D	A, B	DAL,IRC2,TEC,VIS,VIS2
M8340102^1580%&	158		C,H,K,M,V	B, D, F	A, B	DAL,IRC2,TEC,VIS,VIS2
M8340102^1600%&	160		C,H,K,M,V	B, D, G, J	A, B	DAL,IRC2,TEC,VIS,VIS2
M8340102^1620%&	162	Link at Top	C,H,K,M,V	B, D, F	A, B	DAL,IRC2,TEC,VIS,VIS2

M8340102^1640%&	164		C,H,K,M,V	B, D	A, B	DAL,IRC2,TEC,VIS,VIS2
M8340102^1650%&	165		C,H,K,M,V	B, D, F	A, B	DAL,IRC2,TEC,VIS,VIS2
M8340102^1670%&	167		C,H,K,M,V	B, D	A, B	DAL,IRC2,TEC,VIS,VIS2
M8340102^1690%&	169		C,H,K,M,V	B, D, F	A, B	DAL,IRC2,TEC,VIS,VIS2
M8340102^1720%&	172	Link at Top	C,H,K,M,V	B, D	A, B	DAL,IRC2,TEC,VIS,VIS2
M8340102^1740%&	174		C,H,K,M,V	B, D, F	A, B	DAL,IRC2,TEC,VIS,VIS2
M8340102^1760%&	176		C,H,K,M,V	B, D	A, B	DAL,IRC2,TEC,VIS,VIS2
M8340102^1780%&	178		C,H,K,M,V	B, D, F	A, B	DAL,IRC2,TEC,VIS,VIS2
M8340102^1800%&	180		C,H,K,M,V	B, D, G, J	A, B	DAL,IRC2,TEC,VIS,VIS2
M8340102^1820%&	182	Link at Top	C,H,K,M,V	B, D, F	A, B	DAL,IRC2,TEC,VIS,VIS2
M8340102^1840%&	184		C,H,K,M,V	B, D	A, B	DAL,IRC2,TEC,VIS,VIS2
M8340102^1870%&	187		C,H,K,M,V	B, D, F	A, B	DAL,IRC2,TEC,VIS,VIS2
M8340102^1890%&	189		C,H,K,M,V	B, D	A, B	DAL,IRC2,TEC,VIS,VIS2
M8340102^1910%&	191		C,H,K,M,V	B, D, F	A, B	DAL,IRC2,TEC,VIS,VIS2
M8340102^1930%&	193	Link at Top	C,H,K,M,V	B, D	A, B	DAL,IRC2,TEC,VIS,VIS2
M8340102^1960%&	196		C,H,K,M,V	B, D, F	A, B	DAL,IRC2,TEC,VIS,VIS2
M8340102^1980%&	198		C,H,K,M,V	B, D	A, B	DAL,IRC2,TEC,VIS,VIS2
M8340102^2000%&	200		C,H,K,M,V	B, D, F, G, J	A, B	DAL,IRC2,TEC,VIS,VIS2
M8340102^2030%&	203		C,H,K,M,V	B, D	A, B	DAL,IRC2,TEC,VIS,VIS2
M8340102^2050%&	205	Link at Top	C,H,K,M,V	B, D, F	A, B	DAL,IRC2,TEC,VIS,VIS2
M8340102^2080%&	208		C,H,K,M,V	B, D	A, B	DAL,IRC2,TEC,VIS,VIS2
M8340102^2100%&	210		C,H,K,M,V	B, D, F	A, B	DAL,IRC2,TEC,VIS,VIS2
M8340102^2130%&	213		C,H,K,M,V	B, D	A, B	DAL,IRC2,TEC,VIS,VIS2
M8340102^2150%&	215		C,H,K,M,V	B, D, F	A, B	DAL,IRC2,TEC,VIS,VIS2
M8340102^2180%&	218	Link at Top	C,H,K,M,V	B, D	A, B	DAL,IRC2,TEC,VIS,VIS2
M8340102^2200%&	220		C,H,K,M,V	G, J	A, B	DAL,IRC2,TEC,VIS,VIS2
M8340102^2210%&	221		C,H,K,M,V	B, D, F	A, B	DAL,IRC2,TEC,VIS,VIS2
M8340102^2230%&	223		C,H,K,M,V	B, D	A, B	DAL,IRC2,TEC,VIS,VIS2
M8340102^2260%&	226		C,H,K,M,V	B, D, F	A, B	DAL,IRC2,TEC,VIS,VIS2
M8340102^2290%&	229	Link at Top	C,H,K,M,V	B, D	A, B	DAL,IRC2,TEC,VIS,VIS2
M8340102^2320%&	232		C,H,K,M,V	B, D, F	A, B	DAL,IRC2,TEC,VIS,VIS2
M8340102^2340%&	234		C,H,K,M,V	B, D	A, B	DAL,IRC2,TEC,VIS,VIS2
M8340102^2370%&	237		C,H,K,M,V	B, D, F	A, B	DAL,IRC2,TEC,VIS,VIS2
M8340102^2400%&	240		C,H,K,M,V	B, D, F, G, J	A, B	DAL,IRC2,TEC,VIS,VIS2
M8340102^2430%&	243	Link at Top	C,H,K,M,V	B, D, F	A, B	DAL,IRC2,TEC,VIS,VIS2
M8340102^2460%&	246		C,H,K,M,V	B, D	A, B	DAL,IRC2,TEC,VIS,VIS2
M8340102^2490%&	249		C,H,K,M,V	B, D, F	A, B	DAL,IRC2,TEC,VIS,VIS2
M8340102^2520%&	252		C,H,K,M,V	B, D	A, B	DAL,IRC2,TEC,VIS,VIS2
M8340102^2550%&	255		C,H,K,M,V	B, D, F	A, B	DAL,IRC2,TEC,VIS,VIS2
M8340102^2580%&	258	Link at Top	C,H,K,M,V	B, D	A, B	DAL,IRC2,TEC,VIS,VIS2
M8340102^2610%&	261		C,H,K,M,V	B, D, F	A, B	DAL,IRC2,TEC,VIS,VIS2
M8340102^2640%&	264		C,H,K,M,V	B, D	A, B	DAL,IRC2,TEC,VIS,VIS2
M8340102^2670%&	267		C,H,K,M,V	B, D, F	A, B	DAL,IRC2,TEC,VIS,VIS2
M8340102^2700%&	270		C,H,K,M,V	G, J	A, B	DAL,IRC2,TEC,VIS,VIS2
M8340102^2710%&	271	Link at Top	C,H,K,M,V	B, D	A, B	DAL,IRC2,TEC,VIS,VIS2
M8340102^2740%&	274		C,H,K,M,V	B, D, F	A, B	DAL,IRC2,TEC,VIS,VIS2
M8340102^2770%&	277		C,H,K,M,V	B, D	A, B	DAL,IRC2,TEC,VIS,VIS2

M8340102^2800%&	280		C,H,K,M,V	B, D, F	A, B	DAL,IRC2,TEC,VIS,VIS2
M8340102^2840%&	284		C,H,K,M,V	B, D	A, B	DAL,IRC2,TEC,VIS,VIS2
M8340102^2870%&	287	Link at Top	C,H,K,M,V	B, D, F	A, B	DAL,IRC2,TEC,VIS,VIS2
M8340102^2910%&	291		C,H,K,M,V	B, D	A, B	DAL,IRC2,TEC,VIS,VIS2
M8340102^2940%&	294		C,H,K,M,V	B, D, F	A, B	DAL,IRC2,TEC,VIS,VIS2
M8340102^2980%&	298		C,H,K,M,V	B, D	A, B	DAL,IRC2,TEC,VIS,VIS2
M8340102^3000%&	300		C,H,K,M,V	G, J	A, B	DAL,IRC2,TEC,VIS,VIS2
M8340102^3010%&	301	Link at Top	C,H,K,M,V	B, D, F	A, B	DAL,IRC2,TEC,VIS,VIS2
M8340102^3050%&	305		C,H,K,M,V	B, D	A, B	DAL,IRC2,TEC,VIS,VIS2
M8340102^3090%&	309		C,H,K,M,V	B, D, F	A, B	DAL,IRC2,TEC,VIS,VIS2
M8340102^3120%&	312		C,H,K,M,V	B, D	A, B	DAL,IRC2,TEC,VIS,VIS2
M8340102^3160%&	316		C,H,K,M,V	B, D, F	A, B	DAL,IRC2,TEC,VIS,VIS2
M8340102^3200%&	320	Link at Top	C,H,K,M,V	B, D	A, B	DAL,IRC2,TEC,VIS,VIS2
M8340102^3240%&	324		C,H,K,M,V	B, D, F	A, B	DAL,IRC2,TEC,VIS,VIS2
M8340102^3280%&	328		C,H,K,M,V	B, D	A, B	DAL,IRC2,TEC,VIS,VIS2
M8340102^3300%&	330		C,H,K,M,V	G, J	A, B	DAL,IRC2,TEC,VIS,VIS2
M8340102^3320%&	332		C,H,K,M,V	B, D, F	A, B	DAL,IRC2,TEC,VIS,VIS2
M8340102^3360%&	336	Link at Top	C,H,K,M,V	B, D	A, B	DAL,IRC2,TEC,VIS,VIS2
M8340102^3400%&	340		C,H,K,M,V	B, D, F	A, B	DAL,IRC2,TEC,VIS,VIS2
M8340102^3440%&	344		C,H,K,M,V	B, D	A, B	DAL,IRC2,TEC,VIS,VIS2
M8340102^3480%&	348		C,H,K,M,V	B, D, F	A, B	DAL,IRC2,TEC,VIS,VIS2
M8340102^3520%&	352		C,H,K,M,V	B, D	A, B	DAL,IRC2,TEC,VIS,VIS2
M8340102^3570%&	357	Link at Top	C,H,K,M,V	B, D, F	A, B	DAL,IRC2,TEC,VIS,VIS2
M8340102^3600%&	360		C,H,K,M,V	G, J	A, B	DAL,IRC2,TEC,VIS,VIS2
M8340102^3610%&	361		C,H,K,M,V	B, D	A, B	DAL,IRC2,TEC,VIS,VIS2
M8340102^3650%&	365		C,H,K,M,V	B, D, F	A, B	DAL,IRC2,TEC,VIS,VIS2
M8340102^3700%&	370		C,H,K,M,V	B, D	A, B	DAL,IRC2,TEC,VIS,VIS2
M8340102^3740%&	374	Link at Top	C,H,K,M,V	B, D, F	A, B	DAL,IRC2,TEC,VIS,VIS2
M8340102^3790%&	379		C,H,K,M,V	B, D	A, B	DAL,IRC2,TEC,VIS,VIS2
M8340102^3830%&	383		C,H,K,M,V	B, D, F	A, B	DAL,IRC2,TEC,VIS,VIS2
M8340102^3880%&	388		C,H,K,M,V	B, D	A, B	DAL,IRC2,TEC,VIS,VIS2
M8340102^3900%&	390		C,H,K,M,V	G, J	A, B	DAL,IRC2,TEC,VIS,VIS2
M8340102^3920%&	392	Link at Top	C,H,K,M,V	B, D, F	A, B	DAL,IRC2,TEC,VIS,VIS2
M8340102^3970%&	397		C,H,K,M,V	B, D	A, B	DAL,IRC2,TEC,VIS,VIS2
M8340102^4020%&	402		C,H,K,M,V	B, D, F	A, B	DAL,IRC2,TEC,VIS,VIS2
M8340102^4070%&	407		C,H,K,M,V	B, D	A, B	DAL,IRC2,TEC,VIS,VIS2
M8340102^4120%&	412		C,H,K,M,V	B, D, F	A, B	DAL,IRC2,TEC,VIS,VIS2
M8340102^4170%&	417	Link at Top	C,H,K,M,V	B, D	A, B	DAL,IRC2,TEC,VIS,VIS2
M8340102^4220%&	422		C,H,K,M,V	B, D, F	A, B	DAL,IRC2,TEC,VIS,VIS2
M8340102^4270%&	427		C,H,K,M,V	B, D	A, B	DAL,IRC2,TEC,VIS,VIS2
M8340102^4300%&	430		C,H,K,M,V	G, J	A, B	DAL,IRC2,TEC,VIS,VIS2
M8340102^4320%&	432		C,H,K,M,V	B, D, F	A, B	DAL,IRC2,TEC,VIS,VIS2
M8340102^4370%&	437	Link at Top	C,H,K,M,V	B, D	A, B	DAL,IRC2,TEC,VIS,VIS2
M8340102^4420%&	442		C,H,K,M,V	B, D, F	A, B	DAL,IRC2,TEC,VIS,VIS2
M8340102^4480%&	448		C,H,K,M,V	B, D	A, B	DAL,IRC2,TEC,VIS,VIS2
M8340102^4530%&	453		C,H,K,M,V	B, D, F	A, B	DAL,IRC2,TEC,VIS,VIS2
M8340102^4590%&	459		C,H,K,M,V	B, D	A, B	DAL,IRC2,TEC,VIS,VIS2

M8340102^4640%&	464	Link at Top	C,H,K,M,V	B, D, F	A, B	DAL,IRC2,TEC,VIS,VIS2
M8340102^4700%&	470		C,H,K,M,V	B, D, G, J	A, B	DAL,IRC2,TEC,VIS,VIS2
M8340102^4750%&	475		C,H,K,M,V	B, D, F	A, B	DAL,IRC2,TEC,VIS,VIS2
M8340102^4810%&	481		C,H,K,M,V	B, D	A, B	DAL,IRC2,TEC,VIS,VIS2
M8340102^4870%&	487		C,H,K,M,V	B, D, F	A, B	DAL,IRC2,TEC,VIS,VIS2
M8340102^4930%&	493	Link at Top	C,H,K,M,V	B, D	A, B	DAL,IRC2,TEC,VIS,VIS2
M8340102^4990%&	499		C,H,K,M,V	B, D, F	A, B	DAL,IRC2,TEC,VIS,VIS2
M8340102^5050%&	505		C,H,K,M,V	B, D	A, B	DAL,IRC2,TEC,VIS,VIS2
M8340102^5100%&	510		C,H,K,M,V	G, J	A, B	DAL,IRC2,TEC,VIS,VIS2
M8340102^5110%&	511		C,H,K,M,V	B, D, F	A, B	DAL,IRC2,TEC,VIS,VIS2
M8340102^5170%&	517	Link at Top	C,H,K,M,V	B, D	A, B	DAL,IRC2,TEC,VIS,VIS2
M8340102^5230%&	523		C,H,K,M,V	B, D, F	A, B	DAL,IRC2,TEC,VIS,VIS2
M8340102^5300%&	530		C,H,K,M,V	B, D	A, B	DAL,IRC2,TEC,VIS,VIS2
M8340102^5360%&	536		C,H,K,M,V	B, D, F	A, B	DAL,IRC2,TEC,VIS,VIS2
M8340102^5420%&	542		C,H,K,M,V	B, D	A, B	DAL,IRC2,TEC,VIS,VIS2
M8340102^5490%&	549	Link at Top	C,H,K,M,V	B, D, F	A, B	DAL,IRC2,TEC,VIS,VIS2
M8340102^5560%&	556		C,H,K,M,V	B, D	A, B	DAL,IRC2,TEC,VIS,VIS2
M8340102^5600%&	560		C,H,K,M,V	G, J	A, B	DAL,IRC2,TEC,VIS,VIS2
M8340102^5620%&	562		C,H,K,M,V	B, D, F	A, B	DAL,IRC2,TEC,VIS,VIS2
M8340102^5690%&	569		C,H,K,M,V	B, D	A, B	DAL,IRC2,TEC,VIS,VIS2
M8340102^5760%&	576	Link at Top	C,H,K,M,V	B, D, F	A, B	DAL,IRC2,TEC,VIS,VIS2
M8340102^5830%&	583		C,H,K,M,V	B, D	A, B	DAL,IRC2,TEC,VIS,VIS2
M8340102^5900%&	590		C,H,K,M,V	B, D, F	A, B	DAL,IRC2,TEC,VIS,VIS2
M8340102^5970%&	597		C,H,K,M,V	B, D	A, B	DAL,IRC2,TEC,VIS,VIS2
M8340102^6040%&	604		C,H,K,M,V	B, D, F	A, B	DAL,IRC2,TEC,VIS,VIS2
M8340102^6120%&	612	Link at Top	C,H,K,M,V	B, D	A, B	DAL,IRC2,TEC,VIS,VIS2
M8340102^6190%&	619		C,H,K,M,V	B, D, F	A, B	DAL,IRC2,TEC,VIS,VIS2
M8340102^6200%&	620		C,H,K,M,V	G, J	A, B	DAL,IRC2,TEC,VIS,VIS2
M8340102^6260%&	626		C,H,K,M,V	B, D	A, B	DAL,IRC2,TEC,VIS,VIS2
M8340102^6340%&	634		C,H,K,M,V	B, D, F	A, B	DAL,IRC2,TEC,VIS,VIS2
M8340102^6420%&	642	Link at Top	C,H,K,M,V	B, D	A, B	DAL,IRC2,TEC,VIS,VIS2
M8340102^6490%&	649		C,H,K,M,V	B, D, F	A, B	DAL,IRC2,TEC,VIS,VIS2
M8340102^6570%&	657		C,H,K,M,V	B, D	A, B	DAL,IRC2,TEC,VIS,VIS2
M8340102^6650%&	665		C,H,K,M,V	B, D, F	A, B	DAL,IRC2,TEC,VIS,VIS2
M8340102^6730%&	673		C,H,K,M,V	B, D	A, B	DAL,IRC2,TEC,VIS,VIS2
M8340102^6800%&	680	Link at Top	C,H,K,M,V	G, J	A, B	DAL,IRC2,TEC,VIS,VIS2
M8340102^6810%&	681		C,H,K,M,V	B, D, F	A, B	DAL,IRC2,TEC,VIS,VIS2
M8340102^6900%&	690		C,H,K,M,V	B, D	A, B	DAL,IRC2,TEC,VIS,VIS2
M8340102^6980%&	698		C,H,K,M,V	B, D, F	A, B	DAL,IRC2,TEC,VIS,VIS2
M8340102^7060%&	706		C,H,K,M,V	B, D	A, B	DAL,IRC2,TEC,VIS,VIS2
M8340102^7150%&	715	Link at Top	C,H,K,M,V	B, D, F	A, B	DAL,IRC2,TEC,VIS,VIS2
M8340102^7230%&	723		C,H,K,M,V	B, D	A, B	DAL,IRC2,TEC,VIS,VIS2
M8340102^7320%&	732		C,H,K,M,V	B, D, F	A, B	DAL,IRC2,TEC,VIS,VIS2
M8340102^7410%&	741		C,H,K,M,V	B, D	A, B	DAL,IRC2,TEC,VIS,VIS2
M8340102^7500%&	750		C,H,K,M,V	B, D, F, G, J	A, B	DAL,IRC2,TEC,VIS,VIS2
M8340102^7590%&	759	Link at Top	C,H,K,M,V	B, D	A, B	DAL,IRC2,TEC,VIS,VIS2
M8340102^7680%&	768		C,H,K,M,V	B, D, F	A, B	DAL,IRC2,TEC,VIS,VIS2

M8340102^7770%&	777		C,H,K,M,V	B, D	A, B	DAL,IRC2,TEC,VIS,VIS2
M8340102^7870%&	787		C,H,K,M,V	B, D, F	A, B	DAL,IRC2,TEC,VIS,VIS2
M8340102^7960%&	796		C,H,K,M,V	B, D	A, B	DAL,IRC2,TEC,VIS,VIS2
M8340102^8060%&	806	Link at Top	C,H,K,M,V	B, D, F	A, B	DAL,IRC2,TEC,VIS,VIS2
M8340102^8160%&	816		C,H,K,M,V	B, D	A, B	DAL,IRC2,TEC,VIS,VIS2
M8340102^8200%&	820		C,H,K,M,V	G, J	A, B	DAL,IRC2,TEC,VIS,VIS2
M8340102^8250%&	825		C,H,K,M,V	B, D, F	A, B	DAL,IRC2,TEC,VIS,VIS2
M8340102^8350%&	835		C,H,K,M,V	B, D	A, B	DAL,IRC2,TEC,VIS,VIS2
M8340102^8450%&	845	Link at Top	C,H,K,M,V	B, D, F	A, B	DAL,IRC2,TEC,VIS,VIS2
M8340102^8560%&	856		C,H,K,M,V	B, D	A, B	DAL,IRC2,TEC,VIS,VIS2
M8340102^8660%&	866		C,H,K,M,V	B, D, F	A, B	DAL,IRC2,TEC,VIS,VIS2
M8340102^8760%&	876		C,H,K,M,V	B, D	A, B	DAL,IRC2,TEC,VIS,VIS2
M8340102^8870%&	887		C,H,K,M,V	B, D, F	A, B	DAL,IRC2,TEC,VIS,VIS2
M8340102^8980%&	898	Link at Top	C,H,K,M,V	B, D	A, B	DAL,IRC2,TEC,VIS,VIS2
M8340102^9090%&	909		C,H,K,M,V	B, D, F	A, B	DAL,IRC2,TEC,VIS,VIS2
M8340102^9100%&	910		C,H,K,M,V	G, J	A, B	DAL,IRC2,TEC,VIS,VIS2
M8340102^9200%&	920		C,H,K,M,V	B, D	A, B	DAL,IRC2,TEC,VIS,VIS2
M8340102^9310%&	931		C,H,K,M,V	B, D, F	A, B	DAL,IRC2,TEC,VIS,VIS2
M8340102^9420%&	942	Link at Top	C,H,K,M,V	B, D	A, B	DAL,IRC2,TEC,VIS,VIS2
M8340102^9530%&	953		C,H,K,M,V	B, D, F	A, B	DAL,IRC2,TEC,VIS,VIS2
M8340102^9650%&	965		C,H,K,M,V	B, D	A, B	DAL,IRC2,TEC,VIS,VIS2
M8340102^9760%&	976		C,H,K,M,V	B, D, F	A, B	DAL,IRC2,TEC,VIS,VIS2
M8340102^9880%&	988		C,H,K,M,V	B, D	A, B	DAL,IRC2,TEC,VIS,VIS2
M8340102^1001%&	1,000	Link at Top	C,H,K,M,V	B, D, F, G, J	A, B	DAL,IRC2,TEC,VIS,VIS2
M8340102^1011%&	1,010		C,H,K,M,V	B, D	A, B	DAL,IRC2,TEC,VIS,VIS2
M8340102^1021%&	1,020		C,H,K,M,V	B, D, F	A, B	DAL,IRC2,TEC,VIS,VIS2
M8340102^1041%&	1,040		C,H,K,M,V	B, D	A, B	DAL,IRC2,TEC,VIS,VIS2
M8340102^1051%&	1,050		C,H,K,M,V	B, D, F	A, B	DAL,IRC2,TEC,VIS,VIS2
M8340102^1061%&	1,060	Link at Top	C,H,K,M,V	B, D	A, B	DAL,IRC2,TEC,VIS,VIS2
M8340102^1071%&	1,070		C,H,K,M,V	B, D, F	A, B	DAL,IRC2,TEC,VIS,VIS2
M8340102^1091%&	1,090		C,H,K,M,V	B, D	A, B	DAL,IRC2,TEC,VIS,VIS2
M8340102^1101%&	1,100		C,H,K,M,V	B, D, F, G, J	A, B	DAL,IRC2,TEC,VIS,VIS2
M8340102^1111%&	1,110		C,H,K,M,V	B, D	A, B	DAL,IRC2,TEC,VIS,VIS2
M8340102^1131%&	1,130	Link at Top	C,H,K,M,V	B, D, F	A, B	DAL,IRC2,TEC,VIS,VIS2
M8340102^1141%&	1,140		C,H,K,M,V	B, D	A, B	DAL,IRC2,TEC,VIS,VIS2
M8340102^1151%&	1,150		C,H,K,M,V	B, D, F	A, B	DAL,IRC2,TEC,VIS,VIS2
M8340102^1171%&	1,170		C,H,K,M,V	B, D	A, B	DAL,IRC2,TEC,VIS,VIS2
M8340102^1181%&	1,180		C,H,K,M,V	B, D, F	A, B	DAL,IRC2,TEC,VIS,VIS2
M8340102^1201%&	1,200	Link at Top	C,H,K,M,V	B, D, F, G, J	A, B	DAL,IRC2,TEC,VIS,VIS2
M8340102^1211%&	1,210		C,H,K,M,V	B, D, F	A, B	DAL,IRC2,TEC,VIS,VIS2
M8340102^1231%&	1,230		C,H,K,M,V	B, D	A, B	DAL,IRC2,TEC,VIS,VIS2
M8340102^1241%&	1,240		C,H,K,M,V	B, D, F	A, B	DAL,IRC2,TEC,VIS,VIS2
M8340102^1261%&	1,260		C,H,K,M,V	B, D	A, B	DAL,IRC2,TEC,VIS,VIS2
M8340102^1271%&	1,270	Link at Top	C,H,K,M,V	B, D, F	A, B	DAL,IRC2,TEC,VIS,VIS2
M8340102^1291%&	1,290		C,H,K,M,V	B, D	A, B	DAL,IRC2,TEC,VIS,VIS2
M8340102^1301%&	1,300		C,H,K,M,V	B, D, F, G, J	A, B	DAL,IRC2,TEC,VIS,VIS2
M8340102^1321%&	1,320		C,H,K,M,V	B, D	A, B	DAL,IRC2,TEC,VIS,VIS2

M8340102^1331%&	1,330		C,H,K,M,V	B, D, F	A, B	DAL,IRC2,TEC,VIS,VIS2
M8340102^1351%&	1,350	Link at Top	C,H,K,M,V	B, D	A, B	DAL,IRC2,TEC,VIS,VIS2
M8340102^1371%&	1,370		C,H,K,M,V	B, D, F	A, B	DAL,IRC2,TEC,VIS,VIS2
M8340102^1381%&	1,380		C,H,K,M,V	B, D	A, B	DAL,IRC2,TEC,VIS,VIS2
M8340102^1401%&	1,400		C,H,K,M,V	B, D, F	A, B	DAL,IRC2,TEC,VIS,VIS2
M8340102^1421%&	1,420		C,H,K,M,V	B, D	A, B	DAL,IRC2,TEC,VIS,VIS2
M8340102^1431%&	1,430	Link at Top	C,H,K,M,V	B, D, F	A, B	DAL,IRC2,TEC,VIS,VIS2
M8340102^1451%&	1,450		C,H,K,M,V	B, D	A, B	DAL,IRC2,TEC,VIS,VIS2
M8340102^1471%&	1,470		C,H,K,M,V	B, D, F	A, B	DAL,IRC2,TEC,VIS,VIS2
M8340102^1491%&	1,490		C,H,K,M,V	B, D	A, B	DAL,IRC2,TEC,VIS,VIS2
M8340102^1501%&	1,500		C,H,K,M,V	B, D, F, G, J	A, B	DAL,IRC2,TEC,VIS,VIS2
M8340102^1521%&	1,520	Link at Top	C,H,K,M,V	B, D	A, B	DAL,IRC2,TEC,VIS,VIS2
M8340102^1541%&	1,540		C,H,K,M,V	B, D, F	A, B	DAL,IRC2,TEC,VIS,VIS2
M8340102^1561%&	1,560		C,H,K,M,V	B, D	A, B	DAL,IRC2,TEC,VIS,VIS2
M8340102^1581%&	1,580		C,H,K,M,V	B, D, F	A, B	DAL,IRC2,TEC,VIS,VIS2
M8340102^1601%&	1,600		C,H,K,M,V	B, D, G, J	A, B	DAL,IRC2,TEC,VIS,VIS2
M8340102^1621%&	1,620	Link at Top	C,H,K,M,V	B, D, F	A, B	DAL,IRC2,TEC,VIS,VIS2
M8340102^1641%&	1,640		C,H,K,M,V	B, D	A, B	DAL,IRC2,TEC,VIS,VIS2
M8340102^1651%&	1,650		C,H,K,M,V	B, D, F	A, B	DAL,IRC2,TEC,VIS,VIS2
M8340102^1671%&	1,670		C,H,K,M,V	B, D	A, B	DAL,IRC2,TEC,VIS,VIS2
M8340102^1691%&	1,690		C,H,K,M,V	B, D, F	A, B	DAL,IRC2,TEC,VIS,VIS2
M8340102^1721%&	1,720	Link at Top	C,H,K,M,V	B, D	A, B	DAL,IRC2,TEC,VIS,VIS2
M8340102^1741%&	1,740		C,H,K,M,V	B, D, F	A, B	DAL,IRC2,TEC,VIS,VIS2
M8340102^1761%&	1,760		C,H,K,M,V	B, D	A, B	DAL,IRC2,TEC,VIS,VIS2
M8340102^1781%&	1,780		C,H,K,M,V	B, D, F	A, B	DAL,IRC2,TEC,VIS,VIS2
M8340102^1801%&	1,800		C,H,K,M,V	B, D, G, J	A, B	DAL,IRC2,TEC,VIS,VIS2
M8340102^1821%&	1,820	Link at Top	C,H,K,M,V	B, D, F	A, B	DAL,IRC2,TEC,VIS,VIS2
M8340102^1841%&	1,840		C,H,K,M,V	B, D	A, B	DAL,IRC2,TEC,VIS,VIS2
M8340102^1871%&	1,870		C,H,K,M,V	B, D, F	A, B	DAL,IRC2,TEC,VIS,VIS2
M8340102^1891%&	1,890		C,H,K,M,V	B, D	A, B	DAL,IRC2,TEC,VIS,VIS2
M8340102^1911%&	1,910		C,H,K,M,V	B, D, F	A, B	DAL,IRC2,TEC,VIS,VIS2
M8340102^1931%&	1,930	Link at Top	C,H,K,M,V	B, D	A, B	DAL,IRC2,TEC,VIS,VIS2
M8340102^1961%&	1,960		C,H,K,M,V	B, D, F	A, B	DAL,IRC2,TEC,VIS,VIS2
M8340102^1981%&	1,980		C,H,K,M,V	B, D	A, B	DAL,IRC2,TEC,VIS,VIS2
M8340102^2001%&	2,000		C,H,K,M,V	B, D, F, G, J	A, B	DAL,IRC2,TEC,VIS,VIS2
M8340102^2031%&	2,030		C,H,K,M,V	B, D	A, B	DAL,IRC2,TEC,VIS,VIS2
M8340102^2051%&	2,050	Link at Top	C,H,K,M,V	B, D, F	A, B	DAL,IRC2,TEC,VIS,VIS2
M8340102^2081%&	2,080		C,H,K,M,V	B, D	A, B	DAL,IRC2,TEC,VIS,VIS2
M8340102^2101%&	2,100		C,H,K,M,V	B, D, F	A, B	DAL,IRC2,TEC,VIS,VIS2
M8340102^2131%&	2,130		C,H,K,M,V	B, D	A, B	DAL,IRC2,TEC,VIS,VIS2
M8340102^2151%&	2,150		C,H,K,M,V	B, D, F	A, B	DAL,IRC2,TEC,VIS,VIS2
M8340102^2181%&	2,180	Link at Top	C,H,K,M,V	B, D	A, B	DAL,IRC2,TEC,VIS,VIS2
M8340102^2201%&	2,200		C,H,K,M,V	G, J	A, B	DAL,IRC2,TEC,VIS,VIS2
M8340102^2211%&	2,210		C,H,K,M,V	B, D, F	A, B	DAL,IRC2,TEC,VIS,VIS2
M8340102^2231%&	2,230		C,H,K,M,V	B, D	A, B	DAL,IRC2,TEC,VIS,VIS2
M8340102^2261%&	2,260		C,H,K,M,V	B, D, F	A, B	DAL,IRC2,TEC,VIS,VIS2
M8340102^2291%&	2,290	Link at Top	C,H,K,M,V	B, D	A, B	DAL,IRC2,TEC,VIS,VIS2

M8340102^2321%&	2,320		C,H,K,M,V	B, D, F	A, B	DAL,IRC2,TEC,VIS,VIS2
M8340102^2341%&	2,340		C,H,K,M,V	B, D	A, B	DAL,IRC2,TEC,VIS,VIS2
M8340102^2371%&	2,370		C,H,K,M,V	B, D, F	A, B	DAL,IRC2,TEC,VIS,VIS2
M8340102^2401%&	2,400		C,H,K,M,V	B, D, F, G, J	A, B	DAL,IRC2,TEC,VIS,VIS2
M8340102^2431%&	2,430	Link at Top	C,H,K,M,V	B, D, F	A, B	DAL,IRC2,TEC,VIS,VIS2
M8340102^2461%&	2,460		C,H,K,M,V	B, D	A, B	DAL,IRC2,TEC,VIS,VIS2
M8340102^2491%&	2,490		C,H,K,M,V	B, D, F	A, B	DAL,IRC2,TEC,VIS,VIS2
M8340102^2521%&	2,520		C,H,K,M,V	B, D	A, B	DAL,IRC2,TEC,VIS,VIS2
M8340102^2551%&	2,550		C,H,K,M,V	B, D, F	A, B	DAL,IRC2,TEC,VIS,VIS2
M8340102^2581%&	2,580	Link at Top	C,H,K,M,V	B, D	A, B	DAL,IRC2,TEC,VIS,VIS2
M8340102^2611%&	2,610		C,H,K,M,V	B, D, F	A, B	DAL,IRC2,TEC,VIS,VIS2
M8340102^2641%&	2,640		C,H,K,M,V	B, D	A, B	DAL,IRC2,TEC,VIS,VIS2
M8340102^2671%&	2,670		C,H,K,M,V	B, D, F	A, B	DAL,IRC2,TEC,VIS,VIS2
M8340102^2701%&	2,700		C,H,K,M,V	G, J	A, B	DAL,IRC2,TEC,VIS,VIS2
M8340102^2711%&	2,710	Link at Top	C,H,K,M,V	B, D	A, B	DAL,IRC2,TEC,VIS,VIS2
M8340102^2741%&	2,740		C,H,K,M,V	B, D, F	A, B	DAL,IRC2,TEC,VIS,VIS2
M8340102^2771%&	2,770		C,H,K,M,V	B, D	A, B	DAL,IRC2,TEC,VIS,VIS2
M8340102^2801%&	2,800		C,H,K,M,V	B, D, F	A, B	DAL,IRC2,TEC,VIS,VIS2
M8340102^2841%&	2,840		C,H,K,M,V	B, D	A, B	DAL,IRC2,TEC,VIS,VIS2
M8340102^2871%&	2,870	Link at Top	C,H,K,M,V	B, D, F	A, B	DAL,IRC2,TEC,VIS,VIS2
M8340102^2911%&	2,910		C,H,K,M,V	B, D	A, B	DAL,IRC2,TEC,VIS,VIS2
M8340102^2941%&	2,940		C,H,K,M,V	B, D, F	A, B	DAL,IRC2,TEC,VIS,VIS2
M8340102^2981%&	2,980		C,H,K,M,V	B, D	A, B	DAL,IRC2,TEC,VIS,VIS2
M8340102^3001%&	3,000		C,H,K,M,V	G, J	A, B	DAL,IRC2,TEC,VIS,VIS2
M8340102^3011%&	3,010	Link at Top	C,H,K,M,V	B, D, F	A, B	DAL,IRC2,TEC,VIS,VIS2
M8340102^3051%&	3,050		C,H,K,M,V	B, D	A, B	DAL,IRC2,TEC,VIS,VIS2
M8340102^3091%&	3,090		C,H,K,M,V	B, D, F	A, B	DAL,IRC2,TEC,VIS,VIS2
M8340102^3121%&	3,120		C,H,K,M,V	B, D	A, B	DAL,IRC2,TEC,VIS,VIS2
M8340102^3161%&	3,160		C,H,K,M,V	B, D, F	A, B	DAL,IRC2,TEC,VIS,VIS2
M8340102^3201%&	3,200	Link at Top	C,H,K,M,V	B, D	A, B	DAL,IRC2,TEC,VIS,VIS2
M8340102^3241%&	3,240		C,H,K,M,V	B, D, F	A, B	DAL,IRC2,TEC,VIS,VIS2
M8340102^3281%&	3,280		C,H,K,M,V	B, D	A, B	DAL,IRC2,TEC,VIS,VIS2
M8340102^3301%&	3,300		C,H,K,M,V	G, J	A, B	DAL,IRC2,TEC,VIS,VIS2
M8340102^3321%&	3,320		C,H,K,M,V	B, D, F	A, B	DAL,IRC2,TEC,VIS,VIS2
M8340102^3361%&	3,360	Link at Top	C,H,K,M,V	B, D	A, B	DAL,IRC2,TEC,VIS,VIS2
M8340102^3401%&	3,400		C,H,K,M,V	B, D, F	A, B	DAL,IRC2,TEC,VIS,VIS2
M8340102^3441%&	3,440		C,H,K,M,V	B, D	A, B	DAL,IRC2,TEC,VIS,VIS2
M8340102^3481%&	3,480		C,H,K,M,V	B, D, F	A, B	DAL,IRC2,TEC,VIS,VIS2
M8340102^3521%&	3,520		C,H,K,M,V	B, D	A, B	DAL,IRC2,TEC,VIS,VIS2
M8340102^3571%&	3,570	Link at Top	C,H,K,M,V	B, D, F	A, B	DAL,IRC2,TEC,VIS,VIS2
M8340102^3601%&	3,600		C,H,K,M,V	G, J	A, B	DAL,IRC2,TEC,VIS,VIS2
M8340102^3611%&	3,610		C,H,K,M,V	B, D	A, B	DAL,IRC2,TEC,VIS,VIS2
M8340102^3651%&	3,650		C,H,K,M,V	B, D, F	A, B	DAL,IRC2,TEC,VIS,VIS2
M8340102^3701%&	3,700		C,H,K,M,V	B, D	A, B	DAL,IRC2,TEC,VIS,VIS2
M8340102^3741%&	3,740	Link at Top	C,H,K,M,V	B, D, F	A, B	DAL,IRC2,TEC,VIS,VIS2
M8340102^3791%&	3,790		C,H,K,M,V	B, D	A, B	DAL,IRC2,TEC,VIS,VIS2
M8340102^3831%&	3,830		C,H,K,M,V	B, D, F	A, B	DAL,IRC2,TEC,VIS,VIS2

M8340102^3881%&	3,880		C,H,K,M,V	B, D	A, B	DAL,IRC2,TEC,VIS,VIS2
M8340102^3901%&	3,900		C,H,K,M,V	G, J	A, B	DAL,IRC2,TEC,VIS,VIS2
M8340102^3921%&	3,920	Link at Top	C,H,K,M,V	B, D, F	A, B	DAL,IRC2,TEC,VIS,VIS2
M8340102^3971%&	3,970		C,H,K,M,V	B, D	A, B	DAL,IRC2,TEC,VIS,VIS2
M8340102^4021%&	4,020		C,H,K,M,V	B, D, F	A, B	DAL,IRC2,TEC,VIS,VIS2
M8340102^4071%&	4,070		C,H,K,M,V	B, D	A, B	DAL,IRC2,TEC,VIS,VIS2
M8340102^4121%&	4,120		C,H,K,M,V	B, D, F	A, B	DAL,IRC2,TEC,VIS,VIS2
M8340102^4171%&	4,170	Link at Top	C,H,K,M,V	B, D	A, B	DAL,IRC2,TEC,VIS,VIS2
M8340102^4221%&	4,220		C,H,K,M,V	B, D, F	A, B	DAL,IRC2,TEC,VIS,VIS2
M8340102^4271%&	4,270		C,H,K,M,V	B, D	A, B	DAL,IRC2,TEC,VIS,VIS2
M8340102^4301%&	4,300		C,H,K,M,V	G, J	A, B	DAL,IRC2,TEC,VIS,VIS2
M8340102^4321%&	4,320		C,H,K,M,V	B, D, F	A, B	DAL,IRC2,TEC,VIS,VIS2
M8340102^4371%&	4,370	Link at Top	C,H,K,M,V	B, D	A, B	DAL,IRC2,TEC,VIS,VIS2
M8340102^4421%&	4,420		C,H,K,M,V	B, D, F	A, B	DAL,IRC2,TEC,VIS,VIS2
M8340102^4481%&	4,480		C,H,K,M,V	B, D	A, B	DAL,IRC2,TEC,VIS,VIS2
M8340102^4531%&	4,530		C,H,K,M,V	B, D, F	A, B	DAL,IRC2,TEC,VIS,VIS2
M8340102^4591%&	4,590		C,H,K,M,V	B, D	A, B	DAL,IRC2,TEC,VIS,VIS2
M8340102^4641%&	4,640	Link at Top	C,H,K,M,V	B, D, F	A, B	DAL,IRC2,TEC,VIS,VIS2
M8340102^4701%&	4,700		C,H,K,M,V	B, D, G, J	A, B	DAL,IRC2,TEC,VIS,VIS2
M8340102^4751%&	4,750		C,H,K,M,V	B, D, F	A, B	DAL,IRC2,TEC,VIS,VIS2
M8340102^4811%&	4,810		C,H,K,M,V	B, D	A, B	DAL,IRC2,TEC,VIS,VIS2
M8340102^4871%&	4,870		C,H,K,M,V	B, D, F	A, B	DAL,IRC2,TEC,VIS,VIS2
M8340102^4931%&	4,930	Link at Top	C,H,K,M,V	B, D	A, B	DAL,IRC2,TEC,VIS,VIS2
M8340102^4991%&	4,990		C,H,K,M,V	B, D, F	A, B	DAL,IRC2,TEC,VIS,VIS2
M8340102^5051%&	5,050		C,H,K,M,V	B, D	A, B	DAL,IRC2,TEC,VIS,VIS2
M8340102^5101%&	5,100		C,H,K,M,V	G, J	A, B	DAL,IRC2,TEC,VIS,VIS2
M8340102^5111%&	5,110		C,H,K,M,V	B, D, F	A, B	DAL,IRC2,TEC,VIS,VIS2
M8340102^5171%&	5,170	Link at Top	C,H,K,M,V	B, D	A, B	DAL,IRC2,TEC,VIS,VIS2
M8340102^5231%&	5,230		C,H,K,M,V	B, D, F	A, B	DAL,IRC2,TEC,VIS,VIS2
M8340102^5301%&	5,300		C,H,K,M,V	B, D	A, B	DAL,IRC2,TEC,VIS,VIS2
M8340102^5361%&	5,360		C,H,K,M,V	B, D, F	A, B	DAL,IRC2,TEC,VIS,VIS2
M8340102^5421%&	5,420		C,H,K,M,V	B, D	A, B	DAL,IRC2,TEC,VIS,VIS2
M8340102^5491%&	5,490	Link at Top	C,H,K,M,V	B, D, F	A, B	DAL,IRC2,TEC,VIS,VIS2
M8340102^5561%&	5,560		C,H,K,M,V	B, D	A, B	DAL,IRC2,TEC,VIS,VIS2
M8340102^5601%&	5,600		C,H,K,M,V	G, J	A, B	DAL,IRC2,TEC,VIS,VIS2
M8340102^5621%&	5,620		C,H,K,M,V	B, D, F	A, B	DAL,IRC2,TEC,VIS,VIS2
M8340102^5691%&	5,690		C,H,K,M,V	B, D	A, B	DAL,IRC2,TEC,VIS,VIS2
M8340102^5761%&	5,760	Link at Top	C,H,K,M,V	B, D, F	A, B	DAL,IRC2,TEC,VIS,VIS2
M8340102^5831%&	5,830		C,H,K,M,V	B, D	A, B	DAL,IRC2,TEC,VIS,VIS2
M8340102^5901%&	5,900		C,H,K,M,V	B, D, F	A, B	DAL,IRC2,TEC,VIS,VIS2
M8340102^5971%&	5,970		C,H,K,M,V	B, D	A, B	DAL,IRC2,TEC,VIS,VIS2
M8340102^6041%&	6,040		C,H,K,M,V	B, D, F	A, B	DAL,IRC2,TEC,VIS,VIS2
M8340102^6121%&	6,120	Link at Top	C,H,K,M,V	B, D	A, B	DAL,IRC2,TEC,VIS,VIS2
M8340102^6191%&	6,190		C,H,K,M,V	B, D, F	A, B	DAL,IRC2,TEC,VIS,VIS2
M8340102^6201%&	6,200		C,H,K,M,V	G, J	A, B	DAL,IRC2,TEC,VIS,VIS2
M8340102^6261%&	6,260		C,H,K,M,V	B, D	A, B	DAL,IRC2,TEC,VIS,VIS2
M8340102^6341%&	6,340		C,H,K,M,V	B, D, F	A, B	DAL,IRC2,TEC,VIS,VIS2

M8340102^6421%&	6,420	Link at Top	C,H,K,M,V	B, D	A, B	DAL,IRC2,TEC,VIS,VIS2
M8340102^6491%&	6,490		C,H,K,M,V	B, D, F	A, B	DAL,IRC2,TEC,VIS,VIS2
M8340102^6571%&	6,570		C,H,K,M,V	B, D	A, B	DAL,IRC2,TEC,VIS,VIS2
M8340102^6651%&	6,650		C,H,K,M,V	B, D, F	A, B	DAL,IRC2,TEC,VIS,VIS2
M8340102^6731%&	6,730		C,H,K,M,V	B, D	A, B	DAL,IRC2,TEC,VIS,VIS2
M8340102^6801%&	6,800	Link at Top	C,H,K,M,V	G, J	A, B	DAL,IRC2,TEC,VIS,VIS2
M8340102^6811%&	6,810		C,H,K,M,V	B, D, F	A, B	DAL,IRC2,TEC,VIS,VIS2
M8340102^6901%&	6,900		C,H,K,M,V	B, D	A, B	DAL,IRC2,TEC,VIS,VIS2
M8340102^6981%&	6,980		C,H,K,M,V	B, D, F	A, B	DAL,IRC2,TEC,VIS,VIS2
M8340102^7061%&	7,060		C,H,K,M,V	B, D	A, B	DAL,IRC2,TEC,VIS,VIS2
M8340102^7151%&	7,150	Link at Top	C,H,K,M,V	B, D, F	A, B	DAL,IRC2,TEC,VIS,VIS2
M8340102^7231%&	7,230		C,H,K,M,V	B, D	A, B	DAL,IRC2,TEC,VIS,VIS2
M8340102^7321%&	7,320		C,H,K,M,V	B, D, F	A, B	DAL,IRC2,TEC,VIS,VIS2
M8340102^7411%&	7,410		C,H,K,M,V	B, D	A, B	DAL,IRC2,TEC,VIS,VIS2
M8340102^7501%&	7,500		C,H,K,M,V	B, D, F, G, J	A, B	DAL,IRC2,TEC,VIS,VIS2
M8340102^7591%&	7,590	Link at Top	C,H,K,M,V	B, D	A, B	DAL,IRC2,TEC,VIS,VIS2
M8340102^7681%&	7,680		C,H,K,M,V	B, D, F	A, B	DAL,IRC2,TEC,VIS,VIS2
M8340102^7771%&	7,770		C,H,K,M,V	B, D	A, B	DAL,IRC2,TEC,VIS,VIS2
M8340102^7871%&	7,870		C,H,K,M,V	B, D, F	A, B	DAL,IRC2,TEC,VIS,VIS2
M8340102^7961%&	7,960		C,H,K,M,V	B, D	A, B	DAL,IRC2,TEC,VIS,VIS2
M8340102^8061%&	8,060	Link at Top	C,H,K,M,V	B, D, F	A, B	DAL,IRC2,TEC,VIS,VIS2
M8340102^8161%&	8,160		C,H,K,M,V	B, D	A, B	DAL,IRC2,TEC,VIS,VIS2
M8340102^8201%&	8,200		C,H,K,M,V	G, J	A, B	DAL,IRC2,TEC,VIS,VIS2
M8340102^8251%&	8,250		C,H,K,M,V	B, D, F	A, B	DAL,IRC2,TEC,VIS,VIS2
M8340102^8351%&	8,350		C,H,K,M,V	B, D	A, B	DAL,IRC2,TEC,VIS,VIS2
M8340102^8451%&	8,450	Link at Top	C,H,K,M,V	B, D, F	A, B	DAL,IRC2,TEC,VIS,VIS2
M8340102^8561%&	8,560		C,H,K,M,V	B, D	A, B	DAL,IRC2,TEC,VIS,VIS2
M8340102^8661%&	8,660		C,H,K,M,V	B, D, F	A, B	DAL,IRC2,TEC,VIS,VIS2
M8340102^8761%&	8,760		C,H,K,M,V	B, D	A, B	DAL,IRC2,TEC,VIS,VIS2
M8340102^8871%&	8,870		C,H,K,M,V	B, D, F	A, B	DAL,IRC2,TEC,VIS,VIS2
M8340102^8981%&	8,980	Link at Top	C,H,K,M,V	B, D	A, B	DAL,IRC2,TEC,VIS,VIS2
M8340102^9091%&	9,090		C,H,K,M,V	B, D, F	A, B	DAL,IRC2,TEC,VIS,VIS2
M8340102^9101%&	9,100		C,H,K,M,V	G, J	A, B	DAL,IRC2,TEC,VIS,VIS2
M8340102^9201%&	9,200		C,H,K,M,V	B, D	A, B	DAL,IRC2,TEC,VIS,VIS2
M8340102^9311%&	9,310		C,H,K,M,V	B, D, F	A, B	DAL,IRC2,TEC,VIS,VIS2
M8340102^9421%&	9,420	Link at Top	C,H,K,M,V	B, D	A, B	DAL,IRC2,TEC,VIS,VIS2
M8340102^9531%&	9,530		C,H,K,M,V	B, D, F	A, B	DAL,IRC2,TEC,VIS,VIS2
M8340102^9651%&	9,650		C,H,K,M,V	B, D	A, B	DAL,IRC2,TEC,VIS,VIS2
M8340102^9761%&	9,760		C,H,K,M,V	B, D, F	A, B	DAL,IRC2,TEC,VIS,VIS2
M8340102^9881%&	9,880		C,H,K,M,V	B, D	A, B	DAL,IRC2,TEC,VIS,VIS2
M8340102^1002%&	10,000	Link at Top	C,H,K,M,V	B, D, F, G, J	A, B	DAL,IRC2,TEC,VIS,VIS2
M8340102^1012%&	10,100		C,H,K,M,V	B, D	A, B	DAL,IRC2,TEC
M8340102^1022%&	10,200		C,H,K,M,V	B, D, F	A, B	DAL,IRC2,TEC
M8340102^1042%&	10,400		C,H,K,M,V	B, D	A, B	DAL,IRC2,TEC
M8340102^1052%&	10,500		C,H,K,M,V	B, D, F	A, B	DAL,IRC2,TEC
M8340102^1062%&	10,600	Link at Top	C,H,K,M,V	B, D	A, B	DAL,IRC2,TEC
M8340102^1072%&	10,700		C,H,K,M,V	B, D, F	A, B	DAL,IRC2,TEC

M8340102^1092%&	10,900		C,H,K,M,V	B, D	A, B	DAL,IRC2,TEC
M8340102^1102%&	11,000		C,H,K,M,V	B, D, F, G, J	A, B	DAL,IRC2,TEC
M8340102^1112%&	11,100		C,H,K,M,V	B, D	A, B	DAL,IRC2,TEC
M8340102^1132%&	11,300	Link at Top	C,H,K,M,V	B, D, F	A, B	DAL,IRC2,TEC
M8340102^1142%&	11,400		C,H,K,M,V	B, D	A, B	DAL,IRC2,TEC
M8340102^1152%&	11,500		C,H,K,M,V	B, D, F	A, B	DAL,IRC2,TEC
M8340102^1172%&	11,700		C,H,K,M,V	B, D	A, B	DAL,IRC2,TEC
M8340102^1182%&	11,800		C,H,K,M,V	B, D, F	A, B	DAL,IRC2,TEC
M8340102^1202%&	12,000	Link at Top	C,H,K,M,V	B, D, F, G, J	A, B	DAL,IRC2,TEC
M8340102^1212%&	12,100		C,H,K,M,V	B, D, F	A, B	DAL,IRC2,TEC
M8340102^1232%&	12,300		C,H,K,M,V	B, D	A, B	DAL,IRC2,TEC
M8340102^1242%&	12,400		C,H,K,M,V	B, D, F	A, B	DAL,IRC2,TEC
M8340102^1262%&	12,600		C,H,K,M,V	B, D	A, B	DAL,IRC2,TEC
M8340102^1272%&	12,700	Link at Top	C,H,K,M,V	B, D, F	A, B	DAL,IRC2,TEC
M8340102^1292%&	12,900		C,H,K,M,V	B, D	A, B	DAL,IRC2,TEC
M8340102^1302%&	13,000		C,H,K,M,V	B, D, F, G, J	A, B	DAL,IRC2,TEC
M8340102^1322%&	13,200		C,H,K,M,V	B, D	A, B	DAL,IRC2,TEC
M8340102^1332%&	13,300		C,H,K,M,V	B, D, F	A, B	DAL,IRC2,TEC
M8340102^1352%&	13,500	Link at Top	C,H,K,M,V	B, D	A, B	DAL,IRC2,TEC
M8340102^1372%&	13,700		C,H,K,M,V	B, D, F	A, B	DAL,IRC2,TEC
M8340102^1382%&	13,800		C,H,K,M,V	B, D	A, B	DAL,IRC2,TEC
M8340102^1402%&	14,000		C,H,K,M,V	B, D, F	A, B	DAL,IRC2,TEC
M8340102^1422%&	14,200		C,H,K,M,V	B, D	A, B	DAL,IRC2,TEC
M8340102^1432%&	14,300	Link at Top	C,H,K,M,V	B, D, F	A, B	DAL,IRC2,TEC
M8340102^1452%&	14,500		C,H,K,M,V	B, D	A, B	DAL,IRC2,TEC
M8340102^1472%&	14,700		C,H,K,M,V	B, D, F	A, B	DAL,IRC2,TEC
M8340102^1492%&	14,900		C,H,K,M,V	B, D	A, B	DAL,IRC2,TEC
M8340102^1502%&	15,000		C,H,K,M,V	B, D, F, G, J	A, B	DAL,IRC2,TEC
M8340102^1522%&	15,200	Link at Top	C,H,K,M,V	B, D	A, B	DAL,IRC2,TEC
M8340102^1542%&	15,400		C,H,K,M,V	B, D, F	A, B	DAL,IRC2,TEC
M8340102^1562%&	15,600		C,H,K,M,V	B, D	A, B	DAL,IRC2,TEC
M8340102^1582%&	15,800		C,H,K,M,V	B, D, F	A, B	DAL,IRC2,TEC
M8340102^1602%&	16,000		C,H,K,M,V	B, D, G, J	A, B	DAL,IRC2,TEC
M8340102^1622%&	16,200	Link at Top	C,H,K,M,V	B, D, F	A, B	DAL,IRC2,TEC
M8340102^1642%&	16,400		C,H,K,M,V	B, D	A, B	DAL,IRC2,TEC
M8340102^1652%&	16,500		C,H,K,M,V	B, D, F	A, B	DAL,IRC2,TEC
M8340102^1672%&	16,700		C,H,K,M,V	B, D	A, B	DAL,IRC2,TEC
M8340102^1692%&	16,900		C,H,K,M,V	B, D, F	A, B	DAL,IRC2,TEC
M8340102^1722%&	17,200	Link at Top	C,H,K,M,V	B, D	A, B	DAL,IRC2,TEC
M8340102^1742%&	17,400		C,H,K,M,V	B, D, F	A, B	DAL,IRC2,TEC
M8340102^1762%&	17,600		C,H,K,M,V	B, D	A, B	DAL,IRC2,TEC
M8340102^1782%&	17,800		C,H,K,M,V	B, D, F	A, B	DAL,IRC2,TEC
M8340102^1802%&	18,000		C,H,K,M,V	B, D, G, J	A, B	DAL,IRC2,TEC
M8340102^1822%&	18,200	Link at Top	C,H,K,M,V	B, D, F	A, B	DAL,IRC2,TEC
M8340102^1842%&	18,400		C,H,K,M,V	B, D	A, B	DAL,IRC2,TEC
M8340102^1872%&	18,700		C,H,K,M,V	B, D, F	A, B	DAL,IRC2,TEC
M8340102^1892%&	18,900		C,H,K,M,V	B, D	A, B	DAL,IRC2,TEC

M8340102^1912%&	19,100		C,H,K,M,V	B, D, F	A, B	DAL,IRC2,TEC
M8340102^1932%&	19,300	Link at Top	C,H,K,M,V	B, D	A, B	DAL,IRC2,TEC
M8340102^1962%&	19,600		C,H,K,M,V	B, D, F	A, B	DAL,IRC2,TEC
M8340102^1982%&	19,800		C,H,K,M,V	B, D	A, B	DAL,IRC2,TEC
M8340102^2002%&	20,000		C,H,K,M,V	B, D, F, G, J	A, B	DAL,IRC2,TEC
M8340102^2032%&	20,300		C,H,K,M,V	B, D	A, B	DAL,IRC2,TEC
M8340102^2052%&	20,500	Link at Top	C,H,K,M,V	B, D, F	A, B	DAL,IRC2,TEC
M8340102^2082%&	20,800		C,H,K,M,V	B, D	A, B	DAL,IRC2,TEC
M8340102^2102%&	21,000		C,H,K,M,V	B, D, F	A, B	DAL,IRC2,TEC
M8340102^2132%&	21,300		C,H,K,M,V	B, D	A, B	DAL,IRC2,TEC
M8340102^2152%&	21,500		C,H,K,M,V	B, D, F	A, B	DAL,IRC2,TEC
M8340102^2182%&	21,800	Link at Top	C,H,K,M,V	B, D	A, B	DAL,IRC2,TEC
M8340102^2202%&	22,000		C,H,K,M,V	G, J	A, B	DAL,IRC2,TEC
M8340102^2212%&	22,100		C,H,K,M,V	B, D, F	A, B	DAL,IRC2,TEC
M8340102^2232%&	22,300		C,H,K,M,V	B, D	A, B	DAL,IRC2,TEC
M8340102^2262%&	22,600		C,H,K,M,V	B, D, F	A, B	DAL,IRC2,TEC
M8340102^2292%&	22,900	Link at Top	C,H,K,M,V	B, D	A, B	DAL,IRC2,TEC
M8340102^2322%&	23,200		C,H,K,M,V	B, D, F	A, B	DAL,IRC2,TEC
M8340102^2342%&	23,400		C,H,K,M,V	B, D	A, B	DAL,IRC2,TEC
M8340102^2372%&	23,700		C,H,K,M,V	B, D, F	A, B	DAL,IRC2,TEC
M8340102^2402%&	24,000		C,H,K,M,V	B, D, F, G, J	A, B	DAL,IRC2,TEC
M8340102^2432%&	24,300	Link at Top	C,H,K,M,V	B, D, F	A, B	DAL,IRC2,TEC
M8340102^2462%&	24,600		C,H,K,M,V	B, D	A, B	DAL,IRC2,TEC
M8340102^2492%&	24,900		C,H,K,M,V	B, D, F	A, B	DAL,IRC2,TEC
M8340102^2522%&	25,200		C,H,K,M,V	B, D	A, B	DAL,IRC2,TEC
M8340102^2552%&	25,500		C,H,K,M,V	B, D, F	A, B	DAL,IRC2,TEC
M8340102^2582%&	25,800	Link at Top	C,H,K,M,V	B, D	A, B	DAL,IRC2,TEC
M8340102^2612%&	26,100		C,H,K,M,V	B, D, F	A, B	DAL,IRC2,TEC
M8340102^2642%&	26,400		C,H,K,M,V	B, D	A, B	DAL,IRC2,TEC
M8340102^2672%&	26,700		C,H,K,M,V	B, D, F	A, B	DAL,IRC2,TEC
M8340102^2702%&	27,000		C,H,K,M,V	G, J	A, B	DAL,IRC2,TEC
M8340102^2712%&	27,100	Link at Top	C,H,K,M,V	B, D	A, B	DAL,IRC2,TEC
M8340102^2742%&	27,400		C,H,K,M,V	B, D, F	A, B	DAL,IRC2,TEC
M8340102^2772%&	27,700		C,H,K,M,V	B, D	A, B	DAL,IRC2,TEC
M8340102^2802%&	28,000		C,H,K,M,V	B, D, F	A, B	DAL,IRC2,TEC
M8340102^2842%&	28,400		C,H,K,M,V	B, D	A, B	DAL,IRC2,TEC
M8340102^2872%&	28,700	Link at Top	C,H,K,M,V	B, D, F	A, B	DAL,IRC2,TEC
M8340102^2912%&	29,100		C,H,K,M,V	B, D	A, B	DAL,IRC2,TEC
M8340102^2942%&	29,400		C,H,K,M,V	B, D, F	A, B	DAL,IRC2,TEC
M8340102^2982%&	29,800		C,H,K,M,V	B, D	A, B	DAL,IRC2,TEC
M8340102^3002%&	30,000		C,H,K,M,V	G, J	A, B	DAL,IRC2,TEC
M8340102^3012%&	30,100	Link at Top	C,H,K,M,V	B, D, F	A, B	DAL,IRC2,TEC
M8340102^3052%&	30,500		C,H,K,M,V	B, D	A, B	DAL,IRC2,TEC
M8340102^3092%&	30,900		C,H,K,M,V	B, D, F	A, B	DAL,IRC2,TEC
M8340102^3122%&	31,200		C,H,K,M,V	B, D	A, B	DAL,IRC2,TEC
M8340102^3162%&	31,600		C,H,K,M,V	B, D, F	A, B	DAL,IRC2,TEC
M8340102^3202%&	32,000	Link at Top	C,H,K,M,V	B, D	A, B	DAL,IRC2,TEC

M8340102^3242%&	32,400		C,H,K,M,V	B, D, F	A, B	DAL,IRC2,TEC
M8340102^3282%&	32,800		C,H,K,M,V	B, D	A, B	DAL,IRC2,TEC
M8340102^3302%&	33,000		C,H,K,M,V	G, J	A, B	DAL,IRC2,TEC
M8340102^3322%&	33,200		C,H,K,M,V	B, D, F	A, B	DAL,IRC2,TEC
M8340102^3362%&	33,600	Link at Top	C,H,K,M,V	B, D	A, B	DAL,IRC2,TEC
M8340102^3402%&	34,000		C,H,K,M,V	B, D, F	A, B	DAL,IRC2,TEC
M8340102^3442%&	34,400		C,H,K,M,V	B, D	A, B	DAL,IRC2,TEC
M8340102^3482%&	34,800		C,H,K,M,V	B, D, F	A, B	DAL,IRC2,TEC
M8340102^3522%&	35,200		C,H,K,M,V	B, D	A, B	DAL,IRC2,TEC
M8340102^3572%&	35,700	Link at Top	C,H,K,M,V	B, D, F	A, B	DAL,IRC2,TEC
M8340102^3602%&	36,000		C,H,K,M,V	G, J	A, B	DAL,IRC2,TEC
M8340102^3612%&	36,100		C,H,K,M,V	B, D	A, B	DAL,IRC2,TEC
M8340102^3652%&	36,500		C,H,K,M,V	B, D, F	A, B	DAL,IRC2,TEC
M8340102^3702%&	37,000		C,H,K,M,V	B, D	A, B	DAL,IRC2,TEC
M8340102^3742%&	37,400	Link at Top	C,H,K,M,V	B, D, F	A, B	DAL,IRC2,TEC
M8340102^3792%&	37,900		C,H,K,M,V	B, D	A, B	DAL,IRC2,TEC
M8340102^3832%&	38,300		C,H,K,M,V	B, D, F	A, B	DAL,IRC2,TEC
M8340102^3882%&	38,800		C,H,K,M,V	B, D	A, B	DAL,IRC2,TEC
M8340102^3902%&	39,000		C,H,K,M,V	G, J	A, B	DAL,IRC2,TEC
M8340102^3922%&	39,200	Link at Top	C,H,K,M,V	B, D, F	A, B	DAL,IRC2,TEC
M8340102^3972%&	39,700		C,H,K,M,V	B, D	A, B	DAL,IRC2,TEC
M8340102^4022%&	40,200		C,H,K,M,V	B, D, F	A, B	DAL,IRC2,TEC
M8340102^4072%&	40,700		C,H,K,M,V	B, D	A, B	DAL,IRC2,TEC
M8340102^4122%&	41,200		C,H,K,M,V	B, D, F	A, B	DAL,IRC2,TEC
M8340102^4172%&	41,700	Link at Top	C,H,K,M,V	B, D	A, B	DAL,IRC2,TEC
M8340102^4222%&	42,200		C,H,K,M,V	B, D, F	A, B	DAL,IRC2,TEC
M8340102^4272%&	42,700		C,H,K,M,V	B, D	A, B	DAL,IRC2,TEC
M8340102^4302%&	43,000		C,H,K,M,V	G, J	A, B	DAL,IRC2,TEC
M8340102^4322%&	43,200		C,H,K,M,V	B, D, F	A, B	DAL,IRC2,TEC
M8340102^4372%&	43,700	Link at Top	C,H,K,M,V	B, D	A, B	DAL,IRC2,TEC
M8340102^4422%&	44,200		C,H,K,M,V	B, D, F	A, B	DAL,IRC2,TEC
M8340102^4482%&	44,800		C,H,K,M,V	B, D	A, B	DAL,IRC2,TEC
M8340102^4532%&	45,300		C,H,K,M,V	B, D, F	A, B	DAL,IRC2,TEC
M8340102^4592%&	45,900		C,H,K,M,V	B, D	A, B	DAL,IRC2,TEC
M8340102^4642%&	46,400	Link at Top	C,H,K,M,V	B, D, F	A, B	DAL,IRC2,TEC
M8340102^4702%&	47,000		C,H,K,M,V	B, D, G, J	A, B	DAL,IRC2,TEC
M8340102^4752%&	47,500		C,H,K,M,V	B, D, F	A, B	DAL,IRC2,TEC
M8340102^4812%&	48,100		C,H,K,M,V	B, D	A, B	DAL,IRC2,TEC
M8340102^4872%&	48,700		C,H,K,M,V	B, D, F	A, B	DAL,IRC2,TEC
M8340102^4932%&	49,300	Link at Top	C,H,K,M,V	B, D	A, B	DAL,IRC2,TEC
M8340102^4992%&	49,900		C,H,K,M,V	B, D, F	A, B	DAL,IRC2,TEC
M8340102^5052%&	50,500		C,H,K,M,V	B, D	A, B	DAL,IRC2,TEC
M8340102^5102%&	51,000		C,H,K,M,V	G, J	A, B	DAL,IRC2,TEC
M8340102^5112%&	51,100		C,H,K,M,V	B, D, F	A, B	DAL,IRC2,TEC
M8340102^5172%&	51,700	Link at Top	C,H,K,M,V	B, D	A, B	DAL,IRC2,TEC
M8340102^5232%&	52,300		C,H,K,M,V	B, D, F	A, B	DAL,IRC2,TEC
M8340102^5302%&	53,000		C,H,K,M,V	B, D	A, B	DAL,IRC2,TEC

M8340102^5362%&	53,600		C,H,K,M,V	B, D, F	A, B	DAL,IRC2,TEC
M8340102^5422%&	54,200		C,H,K,M,V	B, D	A, B	DAL,IRC2,TEC
M8340102^5492%&	54,900	Link at Top	C,H,K,M,V	B, D, F	A, B	DAL,IRC2,TEC
M8340102^5562%&	55,600		C,H,K,M,V	B, D	A, B	DAL,IRC2,TEC
M8340102^5602%&	56,000		C,H,K,M,V	G, J	A, B	DAL,IRC2,TEC
M8340102^5622%&	56,200		C,H,K,M,V	B, D, F	A, B	DAL,IRC2,TEC
M8340102^5692%&	56,900		C,H,K,M,V	B, D	A, B	DAL,IRC2,TEC
M8340102^5762%&	57,600	Link at Top	C,H,K,M,V	B, D, F	A, B	DAL,IRC2,TEC
M8340102^5832%&	58,300		C,H,K,M,V	B, D	A, B	DAL,IRC2,TEC
M8340102^5902%&	59,000		C,H,K,M,V	B, D, F	A, B	DAL,IRC2,TEC
M8340102^5972%&	59,700		C,H,K,M,V	B, D	A, B	DAL,IRC2,TEC
M8340102^6042%&	60,400		C,H,K,M,V	B, D, F	A, B	DAL,IRC2,TEC
M8340102^6122%&	61,200	Link at Top	C,H,K,M,V	B, D	A, B	DAL,IRC2,TEC
M8340102^6192%&	61,900		C,H,K,M,V	B, D, F	A, B	DAL,IRC2,TEC
M8340102^6202%&	62,000		C,H,K,M,V	G, J	A, B	DAL,IRC2,TEC
M8340102^6262%&	62,600		C,H,K,M,V	B, D	A, B	DAL,IRC2,TEC
M8340102^6342%&	63,400		C,H,K,M,V	B, D, F	A, B	DAL,IRC2,TEC
M8340102^6422%&	64,200	Link at Top	C,H,K,M,V	B, D	A, B	DAL,IRC2,TEC
M8340102^6492%&	64,900		C,H,K,M,V	B, D, F	A, B	DAL,IRC2,TEC
M8340102^6572%&	65,700		C,H,K,M,V	B, D	A, B	DAL,IRC2,TEC
M8340102^6652%&	66,500		C,H,K,M,V	B, D, F	A, B	DAL,IRC2,TEC
M8340102^6732%&	67,300		C,H,K,M,V	B, D	A, B	DAL,IRC2,TEC
M8340102^6802%&	68,000	Link at Top	C,H,K,M,V	G, J	A, B	DAL,IRC2,TEC
M8340102^6812%&	68,100		C,H,K,M,V	B, D, F	A, B	DAL,IRC2,TEC
M8340102^6902%&	69,000		C,H,K,M,V	B, D	A, B	DAL,IRC2,TEC
M8340102^6982%&	69,800		C,H,K,M,V	B, D, F	A, B	DAL,IRC2,TEC
M8340102^7062%&	70,600		C,H,K,M,V	B, D	A, B	DAL,IRC2,TEC
M8340102^7152%&	71,500	Link at Top	C,H,K,M,V	B, D, F	A, B	DAL,IRC2,TEC
M8340102^7232%&	72,300		C,H,K,M,V	B, D	A, B	DAL,IRC2,TEC
M8340102^7322%&	73,200		C,H,K,M,V	B, D, F	A, B	DAL,IRC2,TEC
M8340102^7412%&	74,100		C,H,K,M,V	B, D	A, B	DAL,IRC2,TEC
M8340102^7502%&	75,000		C,H,K,M,V	B, D, F, G, J	A, B	DAL,IRC2,TEC
M8340102^7592%&	75,900	Link at Top	C,H,K,M,V	B, D	A, B	DAL,IRC2,TEC
M8340102^7682%&	76,800		C,H,K,M,V	B, D, F	A, B	DAL,IRC2,TEC
M8340102^7772%&	77,700		C,H,K,M,V	B, D	A, B	DAL,IRC2,TEC
M8340102^7872%&	78,700		C,H,K,M,V	B, D, F	A, B	DAL,IRC2,TEC
M8340102^7962%&	79,600		C,H,K,M,V	B, D	A, B	DAL,IRC2,TEC
M8340102^8062%&	80,600	Link at Top	C,H,K,M,V	B, D, F	A, B	DAL,IRC2,TEC
M8340102^8162%&	81,600		C,H,K,M,V	B, D	A, B	DAL,IRC2,TEC
M8340102^8202%&	82,000		C,H,K,M,V	G, J	A, B	DAL,IRC2,TEC
M8340102^8252%&	82,500		C,H,K,M,V	B, D, F	A, B	DAL,IRC2,TEC
M8340102^8352%&	83,500		C,H,K,M,V	B, D	A, B	DAL,IRC2,TEC
M8340102^8452%&	84,500	Link at Top	C,H,K,M,V	B, D, F	A, B	DAL,IRC2,TEC
M8340102^8562%&	85,600		C,H,K,M,V	B, D	A, B	DAL,IRC2,TEC
M8340102^8662%&	86,600		C,H,K,M,V	B, D, F	A, B	DAL,IRC2,TEC
M8340102^8762%&	87,600		C,H,K,M,V	B, D	A, B	DAL,IRC2,TEC
M8340102^8872%&	88,700		C,H,K,M,V	B, D, F	A, B	DAL,IRC2,TEC

M8340102^8982%&	89,800	Link at Top	C,H,K,M,V	B, D	A, B	DAL,IRC2,TEC
M8340102^9092%&	90,900		C,H,K,M,V	B, D, F	A, B	DAL,IRC2,TEC
M8340102^9102%&	91,000		C,H,K,M,V	G, J	A, B	DAL,IRC2,TEC
M8340102^9202%&	92,000		C,H,K,M,V	B, D	A, B	DAL,IRC2,TEC
M8340102^9312%&	93,100		C,H,K,M,V	B, D, F	A, B	DAL,IRC2,TEC
M8340102^9422%&	94,200	Link at Top	C,H,K,M,V	B, D	A, B	DAL,IRC2,TEC
M8340102^9532%&	95,300		C,H,K,M,V	B, D, F	A, B	DAL,IRC2,TEC
M8340102^9652%&	96,500		C,H,K,M,V	B, D	A, B	DAL,IRC2,TEC
M8340102^9762%&	97,600		C,H,K,M,V	B, D, F	A, B	DAL,IRC2,TEC
M8340102^9882%&	98,800		C,H,K,M,V	B, D	A, B	DAL,IRC2,TEC
M8340102^1003%&	100,000	Link at Top	C,H,K,M,V	B, D, F, G, J	A, B	DAL,IRC2,TEC
M8340102^1013%&	101,000		C,H,K,M,V	B, D	A, B	DAL
M8340102^1023%&	102,000		C,H,K,M,V	B, D, F	A, B	DAL
M8340102^1043%&	104,000		C,H,K,M,V	B, D	A, B	DAL
M8340102^1053%&	105,000		C,H,K,M,V	B, D, F	A, B	DAL
M8340102^1063%&	106,000	Link at Top	C,H,K,M,V	B, D	A, B	DAL
M8340102^1073%&	107,000		C,H,K,M,V	B, D, F	A, B	DAL
M8340102^1093%&	109,000		C,H,K,M,V	B, D	A, B	DAL
M8340102^1103%&	110,000		C,H,K,M,V	B, D, F, G, J	A, B	DAL
M8340102^1113%&	111,000		C,H,K,M,V	B, D	A, B	DAL
M8340102^1133%&	113,000	Link at Top	C,H,K,M,V	B, D, F	A, B	DAL
M8340102^1143%&	114,000		C,H,K,M,V	B, D	A, B	DAL
M8340102^1153%&	115,000		C,H,K,M,V	B, D, F	A, B	DAL
M8340102^1173%&	117,000		C,H,K,M,V	B, D	A, B	DAL
M8340102^1183%&	118,000		C,H,K,M,V	B, D, F	A, B	DAL
M8340102^1203%&	120,000	Link at Top	C,H,K,M,V	B, D, F, G, J	A, B	DAL
M8340102^1213%&	121,000		C,H,K,M,V	B, D, F	A, B	DAL
M8340102^1233%&	123,000		C,H,K,M,V	B, D	A, B	DAL
M8340102^1243%&	124,000		C,H,K,M,V	B, D, F	A, B	DAL
M8340102^1263%&	126,000		C,H,K,M,V	B, D	A, B	DAL
M8340102^1273%&	127,000	Link at Top	C,H,K,M,V	B, D, F	A, B	DAL
M8340102^1293%&	129,000		C,H,K,M,V	B, D	A, B	DAL
M8340102^1303%&	130,000		C,H,K,M,V	B, D, F, G, J	A, B	DAL
M8340102^1323%&	132,000		C,H,K,M,V	B, D	A, B	DAL
M8340102^1333%&	133,000		C,H,K,M,V	B, D, F	A, B	DAL
M8340102^1353%&	135,000	Link at Top	C,H,K,M,V	B, D	A, B	DAL
M8340102^1373%&	137,000		C,H,K,M,V	B, D, F	A, B	DAL
M8340102^1383%&	138,000		C,H,K,M,V	B, D	A, B	DAL
M8340102^1403%&	140,000		C,H,K,M,V	B, D, F	A, B	DAL
M8340102^1423%&	142,000		C,H,K,M,V	B, D	A, B	DAL
M8340102^1433%&	143,000	Link at Top	C,H,K,M,V	B, D, F	A, B	DAL
M8340102^1453%&	145,000		C,H,K,M,V	B, D	A, B	DAL
M8340102^1473%&	147,000		C,H,K,M,V	B, D, F	A, B	DAL
M8340102^1493%&	149,000		C,H,K,M,V	B, D	A, B	DAL
M8340102^1503%&	150,000		C,H,K,M,V	B, D, F, G, J	A, B	DAL
M8340102^1523%&	152,000	Link at Top	C,H,K,M,V	B, D	A, B	DAL
M8340102^1543%&	154,000		C,H,K,M,V	B, D, F	A, B	DAL

M8340102^1563%&	156,000		C,H,K,M,V	B, D	A, B	DAL
M8340102^1583%&	158,000		C,H,K,M,V	B, D, F	A, B	DAL
M8340102^1603%&	160,000		C,H,K,M,V	B, D, G, J	A, B	DAL
M8340102^1623%&	162,000	Link at Top	C,H,K,M,V	B, D, F	A, B	DAL
M8340102^1643%&	164,000		C,H,K,M,V	B, D	A, B	DAL
M8340102^1653%&	165,000		C,H,K,M,V	B, D, F	A, B	DAL
M8340102^1673%&	167,000		C,H,K,M,V	B, D	A, B	DAL
M8340102^1693%&	169,000		C,H,K,M,V	B, D, F	A, B	DAL
M8340102^1723%&	172,000	Link at Top	C,H,K,M,V	B, D	A, B	DAL
M8340102^1743%&	174,000		C,H,K,M,V	B, D, F	A, B	DAL
M8340102^1763%&	176,000		C,H,K,M,V	B, D	A, B	DAL
M8340102^1783%&	178,000		C,H,K,M,V	B, D, F	A, B	DAL
M8340102^1803%&	180,000		C,H,K,M,V	B, D, G, J	A, B	DAL
M8340102^1823%&	182,000	Link at Top	C,H,K,M,V	B, D, F	A, B	DAL
M8340102^1843%&	184,000		C,H,K,M,V	B, D	A, B	DAL
M8340102^1873%&	187,000		C,H,K,M,V	B, D, F	A, B	DAL
M8340102^1893%&	189,000		C,H,K,M,V	B, D	A, B	DAL
M8340102^1913%&	191,000		C,H,K,M,V	B, D, F	A, B	DAL
M8340102^1933%&	193,000	Link at Top	C,H,K,M,V	B, D	A, B	DAL
M8340102^1963%&	196,000		C,H,K,M,V	B, D, F	A, B	DAL
M8340102^1983%&	198,000		C,H,K,M,V	B, D	A, B	DAL
M8340102^2003%&	200,000		C,H,K,M,V	B, D, F, G, J	A, B	DAL
M8340102^2033%&	203,000		C,H,K,M,V	B, D	A, B	DAL
M8340102^2053%&	205,000	Link at Top	C,H,K,M,V	B, D, F	A, B	DAL
M8340102^2083%&	208,000		C,H,K,M,V	B, D	A, B	DAL
M8340102^2103%&	210,000		C,H,K,M,V	B, D, F	A, B	DAL
M8340102^2133%&	213,000		C,H,K,M,V	B, D	A, B	DAL
M8340102^2153%&	215,000		C,H,K,M,V	B, D, F	A, B	DAL
M8340102^2183%&	218,000	Link at Top	C,H,K,M,V	B, D	A, B	DAL
M8340102^2203%&	220,000		C,H,K,M,V	G, J	A, B	DAL
M8340102^2213%&	221,000		C,H,K,M,V	B, D, F	A, B	DAL
M8340102^2233%&	223,000		C,H,K,M,V	B, D	A, B	DAL
M8340102^2263%&	226,000		C,H,K,M,V	B, D, F	A, B	DAL
M8340102^2293%&	229,000	Link at Top	C,H,K,M,V	B, D	A, B	DAL
M8340102^2323%&	232,000		C,H,K,M,V	B, D, F	A, B	DAL
M8340102^2343%&	234,000		C,H,K,M,V	B, D	A, B	DAL
M8340102^2373%&	237,000		C,H,K,M,V	B, D, F	A, B	DAL
M8340102^2403%&	240,000		C,H,K,M,V	B, D, F, G, J	A, B	DAL
M8340102^2433%&	243,000	Link at Top	C,H,K,M,V	B, D, F	A, B	DAL
M8340102^2463%&	246,000		C,H,K,M,V	B, D	A, B	DAL
M8340102^2493%&	249,000		C,H,K,M,V	B, D, F	A, B	DAL
M8340102^2523%&	252,000		C,H,K,M,V	B, D	A, B	DAL
M8340102^2553%&	255,000		C,H,K,M,V	B, D, F	A, B	DAL
M8340102^2583%&	258,000	Link at Top	C,H,K,M,V	B, D	A, B	DAL
M8340102^2613%&	261,000		C,H,K,M,V	B, D, F	A, B	DAL
M8340102^2643%&	264,000		C,H,K,M,V	B, D	A, B	DAL
M8340102^2673%&	267,000		C,H,K,M,V	B, D, F	A, B	DAL

M8340102^2703%&	270,000		C,H,K,M,V	G, J	A, B	DAL
M8340102^2713%&	271,000	Link at Top	C,H,K,M,V	B, D	A, B	DAL
M8340102^2743%&	274,000		C,H,K,M,V	B, D, F	A, B	DAL
M8340102^2773%&	277,000		C,H,K,M,V	B, D	A, B	DAL
M8340102^2803%&	280,000		C,H,K,M,V	B, D, F	A, B	DAL
M8340102^2843%&	284,000		C,H,K,M,V	B, D	A, B	DAL
M8340102^2873%&	287,000	Link at Top	C,H,K,M,V	B, D, F	A, B	DAL
M8340102^2913%&	291,000		C,H,K,M,V	B, D	A, B	DAL
M8340102^2943%&	294,000		C,H,K,M,V	B, D, F	A, B	DAL
M8340102^2983%&	298,000		C,H,K,M,V	B, D	A, B	DAL
M8340102^3003%&	300,000		C,H,K,M,V	G, J	A, B	DAL
M8340102^3013%&	301,000	Link at Top	C,H,K,M,V	B, D, F	A, B	DAL
M8340102^3053%&	305,000		C,H,K,M,V	B, D	A, B	DAL
M8340102^3093%&	309,000		C,H,K,M,V	B, D, F	A, B	DAL
M8340102^3123%&	312,000		C,H,K,M,V	B, D	A, B	DAL
M8340102^3163%&	316,000		C,H,K,M,V	B, D, F	A, B	DAL
M8340102^3203%&	320,000	Link at Top	C,H,K,M,V	B, D	A, B	DAL
M8340102^3243%&	324,000		C,H,K,M,V	B, D, F	A, B	DAL
M8340102^3283%&	328,000		C,H,K,M,V	B, D	A, B	DAL
M8340102^3303%&	330,000		C,H,K,M,V	G, J	A, B	DAL
M8340102^3323%&	332,000		C,H,K,M,V	B, D, F	A, B	DAL
M8340102^3363%&	336,000	Link at Top	C,H,K,M,V	B, D	A, B	DAL
M8340102^3403%&	340,000		C,H,K,M,V	B, D, F	A, B	DAL
M8340102^3443%&	344,000		C,H,K,M,V	B, D	A, B	DAL
M8340102^3483%&	348,000		C,H,K,M,V	B, D, F	A, B	DAL
M8340102^3523%&	352,000		C,H,K,M,V	B, D	A, B	DAL
M8340102^3573%&	357,000	Link at Top	C,H,K,M,V	B, D, F	A, B	DAL
M8340102^3603%&	360,000		C,H,K,M,V	G, J	A, B	DAL
M8340102^3613%&	361,000		C,H,K,M,V	B, D	A, B	DAL
M8340102^3653%&	365,000		C,H,K,M,V	B, D, F	A, B	DAL
M8340102^3703%&	370,000		C,H,K,M,V	B, D	A, B	DAL
M8340102^3743%&	374,000	Link at Top	C,H,K,M,V	B, D, F	A, B	DAL
M8340102^3793%&	379,000		C,H,K,M,V	B, D	A, B	DAL
M8340102^3833%&	383,000		C,H,K,M,V	B, D, F	A, B	DAL
M8340102^3883%&	388,000		C,H,K,M,V	B, D	A, B	DAL
M8340102^3903%&	390,000		C,H,K,M,V	G, J	A, B	DAL
M8340102^3923%&	392,000	Link at Top	C,H,K,M,V	B, D, F	A, B	DAL
M8340102^3973%&	397,000		C,H,K,M,V	B, D	A, B	DAL
M8340102^4023%&	402,000		C,H,K,M,V	B, D, F	A, B	DAL
M8340102^4073%&	407,000		C,H,K,M,V	B, D	A, B	DAL
M8340102^4123%&	412,000		C,H,K,M,V	B, D, F	A, B	DAL
M8340102^4173%&	417,000	Link at Top	C,H,K,M,V	B, D	A, B	DAL
M8340102^4223%&	422,000		C,H,K,M,V	B, D, F	A, B	DAL
M8340102^4273%&	427,000		C,H,K,M,V	B, D	A, B	DAL
M8340102^4303%&	430,000		C,H,K,M,V	G, J	A, B	DAL
M8340102^4323%&	432,000		C,H,K,M,V	B, D, F	A, B	DAL
M8340102^4373%&	437,000	Link at Top	C,H,K,M,V	B, D	A, B	DAL

M8340102^4423%&	442,000		C,H,K,M,V	B, D, F	A, B	DAL
M8340102^4483%&	448,000		C,H,K,M,V	B, D	A, B	DAL
M8340102^4533%&	453,000		C,H,K,M,V	B, D, F	A, B	DAL
M8340102^4593%&	459,000		C,H,K,M,V	B, D	A, B	DAL
M8340102^4643%&	464,000	Link at Top	C,H,K,M,V	B, D, F	A, B	DAL
M8340102^4703%&	470,000		C,H,K,M,V	B, D, G, J	A, B	DAL
M8340102^4753%&	475,000		C,H,K,M,V	B, D, F	A, B	DAL
M8340102^4813%&	481,000		C,H,K,M,V	B, D	A, B	DAL
M8340102^4873%&	487,000		C,H,K,M,V	B, D, F	A, B	DAL
M8340102^4933%&	493,000	Link at Top	C,H,K,M,V	B, D	A, B	DAL
M8340102^4993%&	499,000		C,H,K,M,V	B, D, F	A, B	DAL
M8340102^5053%&	505,000		C,H,K,M,V	B, D	A, B	DAL
M8340102^5103%&	510,000		C,H,K,M,V	G, J	A, B	DAL
M8340102^5113%&	511,000		C,H,K,M,V	B, D, F	A, B	DAL
M8340102^5173%&	517,000	Link at Top	C,H,K,M,V	B, D	A, B	DAL
M8340102^5233%&	523,000		C,H,K,M,V	B, D, F	A, B	DAL
M8340102^5303%&	530,000		C,H,K,M,V	B, D	A, B	DAL
M8340102^5363%&	536,000		C,H,K,M,V	B, D, F	A, B	DAL
M8340102^5423%&	542,000		C,H,K,M,V	B, D	A, B	DAL
M8340102^5493%&	549,000	Link at Top	C,H,K,M,V	B, D, F	A, B	DAL
M8340102^5563%&	556,000		C,H,K,M,V	B, D	A, B	DAL
M8340102^5603%&	560,000		C,H,K,M,V	G, J	A, B	DAL
M8340102^5623%&	562,000		C,H,K,M,V	B, D, F	A, B	DAL
M8340102^5693%&	569,000		C,H,K,M,V	B, D	A, B	DAL
M8340102^5763%&	576,000	Link at Top	C,H,K,M,V	B, D, F	A, B	DAL
M8340102^5833%&	583,000		C,H,K,M,V	B, D	A, B	DAL
M8340102^5903%&	590,000		C,H,K,M,V	B, D, F	A, B	DAL
M8340102^5973%&	597,000		C,H,K,M,V	B, D	A, B	DAL
M8340102^6043%&	604,000		C,H,K,M,V	B, D, F	A, B	DAL
M8340102^6123%&	612,000	Link at Top	C,H,K,M,V	B, D	A, B	DAL
M8340102^6193%&	619,000		C,H,K,M,V	B, D, F	A, B	DAL
M8340102^6203%&	620,000		C,H,K,M,V	G, J	A, B	DAL
M8340102^6263%&	626,000		C,H,K,M,V	B, D	A, B	DAL
M8340102^6343%&	634,000		C,H,K,M,V	B, D, F	A, B	DAL
M8340102^6423%&	642,000	Link at Top	C,H,K,M,V	B, D	A, B	DAL
M8340102^6493%&	649,000		C,H,K,M,V	B, D, F	A, B	DAL
M8340102^6573%&	657,000		C,H,K,M,V	B, D	A, B	DAL
M8340102^6653%&	665,000		C,H,K,M,V	B, D, F	A, B	DAL
M8340102^6733%&	673,000		C,H,K,M,V	B, D	A, B	DAL
M8340102^6803%&	680,000	Link at Top	C,H,K,M,V	G, J	A, B	DAL
M8340102^6813%&	681,000		C,H,K,M,V	B, D, F	A, B	DAL
M8340102^6903%&	690,000		C,H,K,M,V	B, D	A, B	DAL
M8340102^6983%&	698,000		C,H,K,M,V	B, D, F	A, B	DAL
M8340102^7063%&	706,000		C,H,K,M,V	B, D	A, B	DAL
M8340102^7153%&	715,000	Link at Top	C,H,K,M,V	B, D, F	A, B	DAL
M8340102^7233%&	723,000		C,H,K,M,V	B, D	A, B	DAL
M8340102^7323%&	732,000		C,H,K,M,V	B, D, F	A, B	DAL

M8340102^7413%&	741,000		C,H,K,M,V	B, D	A, B	DAL
M8340102^7503%&	750,000		C,H,K,M,V	B, D, F, G, J	A, B	DAL
M8340102^7593%&	759,000	Link at Top	C,H,K,M,V	B, D	A, B	DAL
M8340102^7683%&	768,000		C,H,K,M,V	B, D, F	A, B	DAL
M8340102^7773%&	777,000		C,H,K,M,V	B, D	A, B	DAL
M8340102^7873%&	787,000		C,H,K,M,V	B, D, F	A, B	DAL
M8340102^7963%&	796,000		C,H,K,M,V	B, D	A, B	DAL
M8340102^8063%&	806,000	Link at Top	C,H,K,M,V	B, D, F	A, B	DAL
M8340102^8163%&	816,000		C,H,K,M,V	B, D	A, B	DAL
M8340102^8203%&	820,000		C,H,K,M,V	G, J	A, B	DAL
M8340102^8253%&	825,000		C,H,K,M,V	B, D, F	A, B	DAL
M8340102^8353%&	835,000		C,H,K,M,V	B, D	A, B	DAL
M8340102^8453%&	845,000	Link at Top	C,H,K,M,V	B, D, F	A, B	DAL
M8340102^8563%&	856,000		C,H,K,M,V	B, D	A, B	DAL
M8340102^8663%&	866,000		C,H,K,M,V	B, D, F	A, B	DAL
M8340102^8763%&	876,000		C,H,K,M,V	B, D	A, B	DAL
M8340102^8873%&	887,000		C,H,K,M,V	B, D, F	A, B	DAL
M8340102^8983%&	898,000	Link at Top	C,H,K,M,V	B, D	A, B	DAL
M8340102^9093%&	909,000		C,H,K,M,V	B, D, F	A, B	DAL
M8340102^9103%&	910,000		C,H,K,M,V	G, J	A, B	DAL
M8340102^9203%&	920,000		C,H,K,M,V	B, D	A, B	DAL
M8340102^9313%&	931,000		C,H,K,M,V	B, D, F	A, B	DAL
M8340102^9423%&	942,000	Link at Top	C,H,K,M,V	B, D	A, B	DAL
M8340102^9533%&	953,000		C,H,K,M,V	B, D, F	A, B	DAL
M8340102^9653%&	965,000		C,H,K,M,V	B, D	A, B	DAL
M8340102^9763%&	976,000		C,H,K,M,V	B, D, F	A, B	DAL
M8340102^9883%&	988,000		C,H,K,M,V	B, D	A, B	DAL
M8340102^1004%&	1,000,000	Link at Top	C,H,K,M,V	B, D, F, G, J	A, B	DAL

RZ020 RESISTORS

DECADE BREAKDOWN

Click on the link below to see the associated parts selection listing:

Resistance Range
10.0 Ohms through 97.6 Ohms
100 Ohms through 988 Ohms
1,000 Ohms through 9,880 Ohms
10,000 Ohms through 98,800 Ohms
100,000 Ohms through 1,000,000 Ohms

MIL-PRF-83401/2 (RZ020), RESISTOR NETWORKS

Fixed, Resistor Networks, Film

Schematic	Characteristic	Element Power Rating (W)	Network Power Rating (W)
A	C	0.1	0.8
A	H	0.2	1.6
A	K	0.2	1.6
A	M	0.2	1.6
A	V	0.1	0.8
B	C	0.05	0.75
B	H	0.1	1.5
B	K	0.1	1.5
B	M	0.1	1.5
B	V	0.05	0.75

Style RZ020

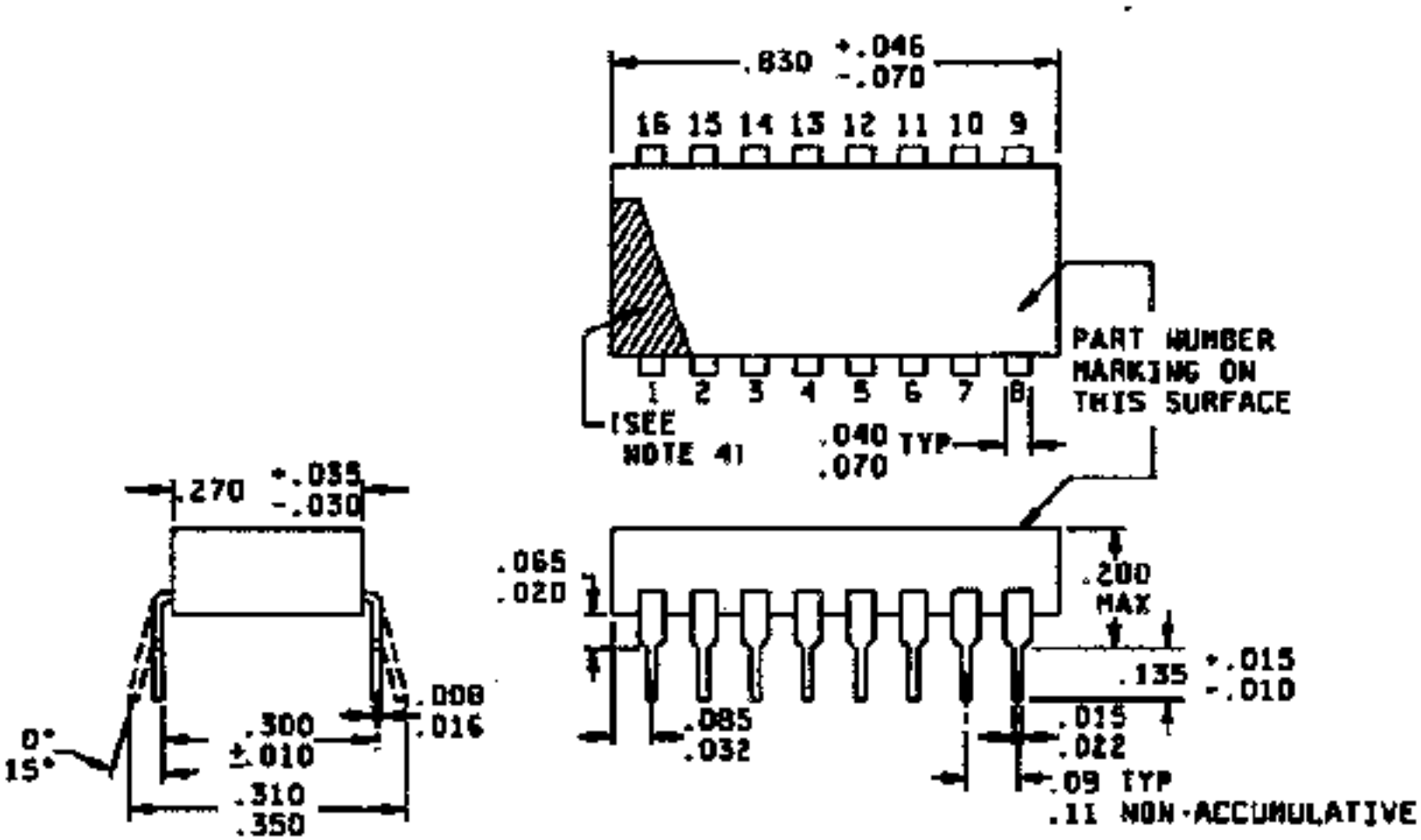

Notes:

1) Dimensions are inches.

2) Metric equivalents are given for general information only.

3) The picturization of the styles above is given as representative of the envelope item. Slight deviations from the outline shown, which are contained within the envelope and do not alter the functional aspects of the device, are acceptable.

4) Pin 1 locator shall be a dot, notch, stripe, or numeral 1 adjacent to pin no. 1, in the shaded area.

MIL-PRF-83401/2 (RZ020) Film Resistor Networks: 10.0 Ohms Through 97.6 Ohms

	Resistance	Power	Char.	Res.		
Part Number	Value (Ohms)	Rating	(^)	Tolerance	Schematic	Manufacturer
M8340102^10R0%&	10.0	See PN Ordering Section	C,H,K,M,V	F, G, J	A, B	DAL
M8340102^10R2%&	10.2		C,H,K,M,V	F	A, B	DAL
M8340102^10R5%&	10.5		C,H,K,M,V	F	A, B	DAL
M8340102^10R7%&	10.7		C,H,K,M,V	F	A, B	DAL
M8340102^11R0%&	11.0		C,H,K,M,V	F, G, J	A, B	DAL
M8340102^11R3%&	11.3	See PN Ordering Section	C,H,K,M,V	F	A, B	DAL
M8340102^11R5%&	11.5		C,H,K,M,V	F	A, B	DAL
M8340102^11R8%&	11.8		C,H,K,M,V	F	A, B	DAL
M8340102^12R0%&	12.0		C,H,K,M,V	F, G, J	A, B	DAL
M8340102^12R1%&	12.1		C,H,K,M,V	F	A, B	DAL
M8340102^12R4%&	12.4	See PN Ordering Section	C,H,K,M,V	F	A, B	DAL
M8340102^12R7%&	12.7		C,H,K,M,V	F	A, B	DAL
M8340102^13R0%&	13.0		C,H,K,M,V	F, G, J	A, B	DAL
M8340102^13R3%&	13.3		C,H,K,M,V	F	A, B	DAL
	Resistance	Power	Char.	Res.		
Part Number	Value (Ohms)	Rating	(^)	Tolerance	Schematic	Manufacturer
M8340102^13R7%&	13.7		C,H,K,M,V	F	A, B	DAL
M8340102^14R0%&	14.0	See PN Ordering Section	C,H,K,M,V	F	A, B	DAL
M8340102^14R3%&	14.3		C,H,K,M,V	F	A, B	DAL
M8340102^14R7%&	14.7		C,H,K,M,V	F	A, B	DAL
M8340102^15R0%&	15.0		C,H,K,M,V	F, G, J	A, B	DAL
M8340102^15R4%&	15.4		C,H,K,M,V	F	A, B	DAL
M8340102^15R8%&	15.8	See PN Ordering Section	C,H,K,M,V	F	A, B	DAL
M8340102^16R0%&	16.0		C,H,K,M,V	G, J	A, B	DAL
M8340102^16R2%&	16.2		C,H,K,M,V	F	A, B	DAL
M8340102^16R5%&	16.5		C,H,K,M,V	F	A, B	DAL
M8340102^16R9%&	16.9		C,H,K,M,V	F	A, B	DAL

M8340102^17R4%&	17.4	See PN Ordering Section	C,H,K,M,V	F	A, B	DAL
M8340102^17R8%&	17.8		C,H,K,M,V	F	A, B	DAL
M8340102^18R0%&	18.0		C,H,K,M,V	G, J	A, B	DAL
	Resistance	Power	Char.	Res.		
Part Number	Value (Ohms)	Rating	(^)	Tolerance	Schematic	Manufacturer
M8340102^18R2%&	18.2		C,H,K,M,V	F	A, B	DAL
M8340102^18R7%&	18.7		C,H,K,M,V	F	A, B	DAL
M8340102^19R1%&	19.1	See PN Ordering Section	C,H,K,M,V	F	A, B	DAL
M8340102^19R6%&	19.6		C,H,K,M,V	F	A, B	DAL
M8340102^20R0%&	20.0		C,H,K,M,V	F, G, J	A, B	DAL
M8340102^20R5%&	20.5		C,H,K,M,V	F	A, B	DAL
M8340102^21R0%&	21.0		C,H,K,M,V	F	A, B	DAL
M8340102^21R5%&	21.5	See PN Ordering Section	C,H,K,M,V	F	A, B	DAL
M8340102^22R0%&	22.0		C,H,K,M,V	G, J	A, B	DAL
M8340102^22R1%&	22.1		C,H,K,M,V	F	A, B	DAL
M8340102^22R6%&	22.6		C,H,K,M,V	F	A, B	DAL
M8340102^23R2%&	23.2		C,H,K,M,V	F	A, B	DAL
M8340102^23R7%&	23.7	See PN Ordering Section	C,H,K,M,V	F	A, B	DAL
M8340102^24R0%&	24.0		C,H,K,M,V	F, G, J	A, B	DAL
	Resistance	Power	Char.	Res.		
Part Number	Value (Ohms)	Rating	(^)	Tolerance	Schematic	Manufacturer
M8340102^24R3%&	24.3		C,H,K,M,V	F	A, B	DAL
M8340102^24R9%&	24.9		C,H,K,M,V	F	A, B	DAL
M8340102^25R5%&	25.5		C,H,K,M,V	F	A, B	DAL
M8340102^26R1%&	26.1	See PN Ordering Section	C,H,K,M,V	F	A, B	DAL
M8340102^26R7%&	26.7		C,H,K,M,V	F	A, B	DAL
M8340102^27R0%&	27.0		C,H,K,M,V	G, J	A, B	DAL,TEC
M8340102^27R4%&	27.4		C,H,K,M,V	F	A, B	DAL,TEC
M8340102^28R0%&	28.0		C,H,K,M,V	F	A, B	DAL,TEC
M8340102^28R7%&	28.7	See PN Ordering Section	C,H,K,M,V	F	A, B	DAL,TEC
M8340102^29R4%&	29.4		C,H,K,M,V	F	A, B	DAL,TEC
M8340102^30R0%&	30.0		C,H,K,M,V	G, J	A, B	DAL,TEC
M8340102^30R1%&	30.1		C,H,K,M,V	F	A, B	DAL,TEC
M8340102^30R9%&	30.9		C,H,K,M,V	F	A, B	DAL,TEC
M8340102^31R6%&	31.6	See PN Ordering Section	C,H,K,M,V	F	A, B	DAL,TEC
	Resistance	Power	Char.	Res.		
Part Number	Value (Ohms)	Rating	(^)	Tolerance	Schematic	Manufacturer
M8340102^32R4%&	32.4		C,H,K,M,V	F	A, B	DAL,TEC
M8340102^33R0%&	33.0		C,H,K,M,V	G, J	A, B	DAL,TEC
M8340102^33R2%&	33.2		C,H,K,M,V	F	A, B	DAL,TEC
M8340102^34R0%&	34.0		C,H,K,M,V	F	A, B	DAL,TEC
M8340102^34R8%&	34.8	See PN Ordering Section	C,H,K,M,V	F	A, B	DAL,TEC
M8340102^35R7%&	35.7		C,H,K,M,V	F	A, B	DAL,TEC
M8340102^36R0%&	36.0		C,H,K,M,V	G, J	A, B	DAL,TEC
M8340102^36R5%&	36.5		C,H,K,M,V	F	A, B	DAL,TEC
M8340102^37R4%&	37.4		C,H,K,M,V	F	A, B	DAL,TEC
M8340102^38R3%&	38.3	See PN Ordering Section	C,H,K,M,V	F	A, B	DAL,TEC

M8340102^39R0%&	39.0		C,H,K,M,V	G, J	A, B	DAL,TEC
M8340102^39R2%&	39.2		C,H,K,M,V	F	A, B	DAL,TEC
M8340102^40R2%&	40.2		C,H,K,M,V	F	A, B	DAL,TEC
M8340102^41R2%&	41.2		C,H,K,M,V	F	A, B	DAL,TEC
	Resistance	Power	Char.	Res.		
Part Number	Value (Ohms)	Rating	(^)	Tolerance	Schematic	Manufacturer
M8340102^42R2%&	42.2	See PN Ordering Section	C,H,K,M,V	F	A, B	DAL,TEC
M8340102^43R0%&	43.0		C,H,K,M,V	G, J	A, B	DAL,TEC
M8340102^43R2%&	43.2		C,H,K,M,V	F	A, B	DAL,TEC
M8340102^44R2%&	44.2		C,H,K,M,V	F	A, B	DAL,TEC
M8340102^45R3%&	45.3		C,H,K,M,V	F	A, B	DAL,TEC
M8340102^46R4%&	46.4	See PN Ordering Section	C,H,K,M,V	F	A, B	DAL,TEC
M8340102^47R0%&	47.0		C,H,K,M,V	G, J	A, B	DAL,TEC
M8340102^47R5%&	47.5		C,H,K,M,V	F	A, B	DAL,TEC
M8340102^48R7%&	48.7		C,H,K,M,V	F	A, B	DAL,TEC
M8340102^49R9%&	49.9		C,H,K,M,V	F	A, B	DAL,TEC
M8340102^51R0%&	51.0	See PN Ordering Section	C,H,K,M,V	G, J	A, B	DAL,IRC2,TEC
M8340102^51R1%&	51.1		C,H,K,M,V	F	A, B	DAL,IRC2,TEC
M8340102^52R3%&	52.3		C,H,K,M,V	F	A, B	DAL,IRC2,TEC
M8340102^53R6%&	53.6		C,H,K,M,V	F	A, B	DAL,IRC2,TEC
	Resistance	Power	Char.	Res.		
Part Number	Value (Ohms)	Rating	(^)	Tolerance	Schematic	Manufacturer
M8340102^54R9%&	54.9		C,H,K,M,V	F	A, B	DAL,IRC2,TEC
M8340102^56R0%&	56.0	See PN Ordering Section	C,H,K,M,V	G, J	A, B	DAL,IRC2,TEC
M8340102^56R2%&	56.2		C,H,K,M,V	F	A, B	DAL,IRC2,TEC
M8340102^57R6%&	57.6		C,H,K,M,V	F	A, B	DAL,IRC2,TEC
M8340102^59R0%&	59.0		C,H,K,M,V	F	A, B	DAL,IRC2,TEC
M8340102^60R4%&	60.4		C,H,K,M,V	F	A, B	DAL,IRC2,TEC
M8340102^61R9%&	61.9	See PN Ordering Section	C,H,K,M,V	F	A, B	DAL,IRC2,TEC
M8340102^62R0%&	62.0		C,H,K,M,V	G, J	A, B	DAL,IRC2,TEC
M8340102^63R4%&	63.4		C,H,K,M,V	F	A, B	DAL,IRC2,TEC
M8340102^64R9%&	64.9		C,H,K,M,V	F	A, B	DAL,IRC2,TEC
M8340102^66R5%&	66.5		C,H,K,M,V	F	A, B	DAL,IRC2,TEC
M8340102^68R0%&	68.0	See PN Ordering Section	C,H,K,M,V	G, J	A, B	DAL,IRC2,TEC
M8340102^68R1%&	68.1		C,H,K,M,V	F	A, B	DAL,IRC2,TEC
M8340102^69R8%&	69.8		C,H,K,M,V	F	A, B	DAL,IRC2,TEC
	Resistance	Power	Char.	Res.		
Part Number	Value (Ohms)	Rating	(^)	Tolerance	Schematic	Manufacturer
M8340102^71R5%&	71.5		C,H,K,M,V	F	A, B	DAL,IRC2,TEC
M8340102^73R2%&	73.2		C,H,K,M,V	F	A, B	DAL,IRC2,TEC
M8340102^75R0%&	75.0	See PN Ordering Section	C,H,K,M,V	F, G, J	A, B	DAL,IRC2,TEC
M8340102^76R8%&	76.8		C,H,K,M,V	F	A, B	DAL,IRC2,TEC
M8340102^78R7%&	78.7		C,H,K,M,V	F	A, B	DAL,IRC2,TEC
M8340102^80R6%&	80.6		C,H,K,M,V	F	A, B	DAL,IRC2,TEC
M8340102^82R0%&	82.0		C,H,K,M,V	G, J	A, B	DAL,IRC2,TEC
M8340102^82R5%&	82.5	See PN Ordering Section	C,H,K,M,V	F	A, B	DAL,IRC2,TEC
M8340102^84R5%&	84.5		C,H,K,M,V	F	A, B	DAL,IRC2,TEC

M8340102^86R6%&	86.6		C,H,K,M,V	F	A, B	DAL,IRC2,TEC
M8340102^88R7%&	88.7		C,H,K,M,V	F	A, B	DAL,IRC2,TEC
M8340102^90R9%&	90.9		C,H,K,M,V	F	A, B	DAL,IRC2,TEC
M8340102^91R0%&	91.0	See PN Ordering Section	C,H,K,M,V	G, J	A, B	DAL,IRC2,TEC
M8340102^93R1%&	93.1		C,H,K,M,V	F	A, B	DAL,IRC2,TEC
M8340102^95R3%&	95.3		C,H,K,M,V	F	A, B	DAL,IRC2,TEC
M8340102^97R6%&	97.6		C,H,K,M,V	F	A, B	DAL,IRC2,TEC
	Resistance	Power	Char.	Res.		
Part Number	Value (Ohms)	Rating	(^)	Tolerance	Schematic	Manufacturer

MIL-PRF-83401/2 (RZ020) Film Resistor Networks: 100 Ohms Through 988 Ohms

	Resistance	Power	Char.	Res.		
Part Number	Value (Ohms)	Rating	(^)	Tolerance	Schematic	Manufacturer
M8340102^1000%&	100		C,H,K,M,V	B, D, F, G, J	A, B	DAL,IRC2,TEC,VIS,VIS2
M8340102^1010%&	101	See PN Ordering Section	C,H,K,M,V	B, D	A, B	DAL,IRC2,TEC,VIS,VIS2
M8340102^1020%&	102		C,H,K,M,V	B, D, F	A, B	DAL,IRC2,TEC,VIS,VIS2
M8340102^1040%&	104		C,H,K,M,V	B, D	A, B	DAL,IRC2,TEC,VIS,VIS2
M8340102^1050%&	105		C,H,K,M,V	B, D, F	A, B	DAL,IRC2,TEC,VIS,VIS2
M8340102^1060%&	106		C,H,K,M,V	B, D	A, B	DAL,IRC2,TEC,VIS,VIS2
M8340102^1070%&	107	See PN Ordering Section	C,H,K,M,V	B, D, F	A, B	DAL,IRC2,TEC,VIS,VIS2
M8340102^1090%&	109		C,H,K,M,V	B, D	A, B	DAL,IRC2,TEC,VIS,VIS2
M8340102^1100%&	110		C,H,K,M,V	B, D, F, G, J	A, B	DAL,IRC2,TEC,VIS,VIS2
M8340102^1110%&	111		C,H,K,M,V	B, D	A, B	DAL,IRC2,TEC,VIS,VIS2
M8340102^1130%&	113		C,H,K,M,V	B, D, F	A, B	DAL,IRC2,TEC,VIS,VIS2
M8340102^1140%&	114	See PN Ordering Section	C,H,K,M,V	B, D	A, B	DAL,IRC2,TEC,VIS,VIS2
M8340102^1150%&	115		C,H,K,M,V	B, D, F	A, B	DAL,IRC2,TEC,VIS,VIS2
M8340102^1170%&	117		C,H,K,M,V	B, D	A, B	DAL,IRC2,TEC,VIS,VIS2
	Resistance	Power	Char.	Res.		
Part Number	Value (Ohms)	Rating	(^)	Tolerance	Schematic	Manufacturer
M8340102^1180%&	118		C,H,K,M,V	B, D, F	A, B	DAL,IRC2,TEC,VIS,VIS2
M8340102^1200%&	120		C,H,K,M,V	B, D, F, G, J	A, B	DAL,IRC2,TEC,VIS,VIS2
M8340102^1210%&	121	See PN Ordering Section	C,H,K,M,V	B, D, F	A, B	DAL,IRC2,TEC,VIS,VIS2
M8340102^1230%&	123		C,H,K,M,V	B, D	A, B	DAL,IRC2,TEC,VIS,VIS2
M8340102^1240%&	124		C,H,K,M,V	B, D, F	A, B	DAL,IRC2,TEC,VIS,VIS2
M8340102^1260%&	126		C,H,K,M,V	B, D	A, B	DAL,IRC2,TEC,VIS,VIS2
M8340102^1270%&	127		C,H,K,M,V	B, D, F	A, B	DAL,IRC2,TEC,VIS,VIS2
M8340102^1290%&	129	See PN Ordering Section	C,H,K,M,V	B, D	A, B	DAL,IRC2,TEC,VIS,VIS2
M8340102^1300%&	130		C,H,K,M,V	B, D, F, G, J	A, B	DAL,IRC2,TEC,VIS,VIS2
M8340102^1320%&	132		C,H,K,M,V	B, D	A, B	DAL,IRC2,TEC,VIS,VIS2
M8340102^1330%&	133		C,H,K,M,V	B, D, F	A, B	DAL,IRC2,TEC,VIS,VIS2
M8340102^1350%&	135	See PN Ordering Section	C,H,K,M,V	B, D	A, B	DAL,IRC2,TEC,VIS,VIS2
M8340102^1370%&	137		C,H,K,M,V	B, D, F	A, B	DAL,IRC2,TEC,VIS,VIS2
M8340102^1380%&	138		C,H,K,M,V	B, D	A, B	DAL,IRC2,TEC,VIS,VIS2
	Resistance	Power	Char.	Res.		

Part Number	Value (Ohms)	Rating	(^)	Tolerance	Schematic	Manufacturer
M8340102^1400%&	140		C,H,K,M,V	B, D, F	A, B	DAL,IRC2,TEC,VIS,VIS2
M8340102^1420%&	142		C,H,K,M,V	B, D	A, B	DAL,IRC2,TEC,VIS,VIS2
M8340102^1430%&	143	See PN Ordering Section	C,H,K,M,V	B, D, F	A, B	DAL,IRC2,TEC,VIS,VIS2
M8340102^1450%&	145		C,H,K,M,V	B, D	A, B	DAL,IRC2,TEC,VIS,VIS2
M8340102^1470%&	147		C,H,K,M,V	B, D, F	A, B	DAL,IRC2,TEC,VIS,VIS2
M8340102^1490%&	149		C,H,K,M,V	B, D	A, B	DAL,IRC2,TEC,VIS,VIS2
M8340102^1500%&	150		C,H,K,M,V	B, D, F, G, J	A, B	DAL,IRC2,TEC,VIS,VIS2
M8340102^1520%&	152	See PN Ordering Section	C,H,K,M,V	B, D	A, B	DAL,IRC2,TEC,VIS,VIS2
M8340102^1540%&	154		C,H,K,M,V	B, D, F	A, B	DAL,IRC2,TEC,VIS,VIS2
M8340102^1560%&	156		C,H,K,M,V	B, D	A, B	DAL,IRC2,TEC,VIS,VIS2
M8340102^1580%&	158		C,H,K,M,V	B, D, F	A, B	DAL,IRC2,TEC,VIS,VIS2
M8340102^1600%&	160		C,H,K,M,V	B, D, G, J	A, B	DAL,IRC2,TEC,VIS,VIS2
M8340102^1620%&	162	See PN Ordering Section	C,H,K,M,V	B, D, F	A, B	DAL,IRC2,TEC,VIS,VIS2
M8340102^1640%&	164		C,H,K,M,V	B, D	A, B	DAL,IRC2,TEC,VIS,VIS2
	Resistance	Power	Char.	Res.		
Part Number	Value (Ohms)	Rating	(^)	Tolerance	Schematic	Manufacturer
M8340102^1650%&	165		C,H,K,M,V	B, D, F	A, B	DAL,IRC2,TEC,VIS,VIS2
M8340102^1670%&	167		C,H,K,M,V	B, D	A, B	DAL,IRC2,TEC,VIS,VIS2
M8340102^1690%&	169		C,H,K,M,V	B, D, F	A, B	DAL,IRC2,TEC,VIS,VIS2
M8340102^1720%&	172	See PN Ordering Section	C,H,K,M,V	B, D	A, B	DAL,IRC2,TEC,VIS,VIS2
M8340102^1740%&	174		C,H,K,M,V	B, D, F	A, B	DAL,IRC2,TEC,VIS,VIS2
M8340102^1760%&	176		C,H,K,M,V	B, D	A, B	DAL,IRC2,TEC,VIS,VIS2
M8340102^1780%&	178		C,H,K,M,V	B, D, F	A, B	DAL,IRC2,TEC,VIS,VIS2
M8340102^1800%&	180		C,H,K,M,V	B, D, G, J	A, B	DAL,IRC2,TEC,VIS,VIS2
M8340102^1820%&	182	See PN Ordering Section	C,H,K,M,V	B, D, F	A, B	DAL,IRC2,TEC,VIS,VIS2
M8340102^1840%&	184		C,H,K,M,V	B, D	A, B	DAL,IRC2,TEC,VIS,VIS2
M8340102^1870%&	187		C,H,K,M,V	B, D, F	A, B	DAL,IRC2,TEC,VIS,VIS2
M8340102^1890%&	189		C,H,K,M,V	B, D	A, B	DAL,IRC2,TEC,VIS,VIS2
M8340102^1910%&	191		C,H,K,M,V	B, D, F	A, B	DAL,IRC2,TEC,VIS,VIS2
M8340102^1930%&	193	See PN Ordering Section	C,H,K,M,V	B, D	A, B	DAL,IRC2,TEC,VIS,VIS2
	Resistance	Power	Char.	Res.		
Part Number	Value (Ohms)	Rating	(^)	Tolerance	Schematic	Manufacturer
M8340102^1960%&	196		C,H,K,M,V	B, D, F	A, B	DAL,IRC2,TEC,VIS,VIS2
M8340102^1980%&	198		C,H,K,M,V	B, D	A, B	DAL,IRC2,TEC,VIS,VIS2
M8340102^2000%&	200		C,H,K,M,V	B, D, F, G, J	A, B	DAL,IRC2,TEC,VIS,VIS2
M8340102^2030%&	203		C,H,K,M,V	B, D	A, B	DAL,IRC2,TEC,VIS,VIS2
M8340102^2050%&	205	See PN Ordering Section	C,H,K,M,V	B, D, F	A, B	DAL,IRC2,TEC,VIS,VIS2
M8340102^2080%&	208		C,H,K,M,V	B, D	A, B	DAL,IRC2,TEC,VIS,VIS2
M8340102^2100%&	210		C,H,K,M,V	B, D, F	A, B	DAL,IRC2,TEC,VIS,VIS2
M8340102^2130%&	213		C,H,K,M,V	B, D	A, B	DAL,IRC2,TEC,VIS,VIS2
M8340102^2150%&	215		C,H,K,M,V	B, D, F	A, B	DAL,IRC2,TEC,VIS,VIS2
M8340102^2180%&	218	See PN Ordering Section	C,H,K,M,V	B, D	A, B	DAL,IRC2,TEC,VIS,VIS2
M8340102^2200%&	220		C,H,K,M,V	G, J	A, B	DAL,IRC2,TEC,VIS,VIS2
M8340102^2210%&	221		C,H,K,M,V	B, D, F	A, B	DAL,IRC2,TEC,VIS,VIS2
M8340102^2230%&	223		C,H,K,M,V	B, D	A, B	DAL,IRC2,TEC,VIS,VIS2
M8340102^2260%&	226		C,H,K,M,V	B, D, F	A, B	DAL,IRC2,TEC,VIS,VIS2

	Resistance	Power	Char.	Res.		
Part Number	Value (Ohms)	Rating	(^)	Tolerance	Schematic	Manufacturer
M8340102^2290%&	229	See PN Ordering Section	C,H,K,M,V	B, D	A, B	DAL,IRC2,TEC,VIS,VIS2
M8340102^2320%&	232		C,H,K,M,V	B, D, F	A, B	DAL,IRC2,TEC,VIS,VIS2
M8340102^2340%&	234		C,H,K,M,V	B, D	A, B	DAL,IRC2,TEC,VIS,VIS2
M8340102^2370%&	237		C,H,K,M,V	B, D, F	A, B	DAL,IRC2,TEC,VIS,VIS2
M8340102^2400%&	240		C,H,K,M,V	B, D, F, G, J	A, B	DAL,IRC2,TEC,VIS,VIS2
M8340102^2430%&	243	See PN Ordering Section	C,H,K,M,V	B, D, F	A, B	DAL,IRC2,TEC,VIS,VIS2
M8340102^2460%&	246		C,H,K,M,V	B, D	A, B	DAL,IRC2,TEC,VIS,VIS2
M8340102^2490%&	249		C,H,K,M,V	B, D, F	A, B	DAL,IRC2,TEC,VIS,VIS2
M8340102^2520%&	252		C,H,K,M,V	B, D	A, B	DAL,IRC2,TEC,VIS,VIS2
M8340102^2550%&	255		C,H,K,M,V	B, D, F	A, B	DAL,IRC2,TEC,VIS,VIS2
M8340102^2580%&	258	See PN Ordering Section	C,H,K,M,V	B, D	A, B	DAL,IRC2,TEC,VIS,VIS2
M8340102^2610%&	261		C,H,K,M,V	B, D, F	A, B	DAL,IRC2,TEC,VIS,VIS2
M8340102^2640%&	264		C,H,K,M,V	B, D	A, B	DAL,IRC2,TEC,VIS,VIS2
M8340102^2670%&	267		C,H,K,M,V	B, D, F	A, B	DAL,IRC2,TEC,VIS,VIS2
	Resistance	Power	Char.	Res.		
Part Number	Value (Ohms)	Rating	(^)	Tolerance	Schematic	Manufacturer
M8340102^2700%&	270		C,H,K,M,V	G, J	A, B	DAL,IRC2,TEC,VIS,VIS2
M8340102^2710%&	271	See PN Ordering Section	C,H,K,M,V	B, D	A, B	DAL,IRC2,TEC,VIS,VIS2
M8340102^2740%&	274		C,H,K,M,V	B, D, F	A, B	DAL,IRC2,TEC,VIS,VIS2
M8340102^2770%&	277		C,H,K,M,V	B, D	A, B	DAL,IRC2,TEC,VIS,VIS2
M8340102^2800%&	280		C,H,K,M,V	B, D, F	A, B	DAL,IRC2,TEC,VIS,VIS2
M8340102^2840%&	284		C,H,K,M,V	B, D	A, B	DAL,IRC2,TEC,VIS,VIS2
M8340102^2870%&	287	See PN Ordering Section	C,H,K,M,V	B, D, F	A, B	DAL,IRC2,TEC,VIS,VIS2
M8340102^2910%&	291		C,H,K,M,V	B, D	A, B	DAL,IRC2,TEC,VIS,VIS2
M8340102^2940%&	294		C,H,K,M,V	B, D, F	A, B	DAL,IRC2,TEC,VIS,VIS2
M8340102^2980%&	298		C,H,K,M,V	B, D	A, B	DAL,IRC2,TEC,VIS,VIS2
M8340102^3000%&	300		C,H,K,M,V	G, J	A, B	DAL,IRC2,TEC,VIS,VIS2
M8340102^3010%&	301	See PN Ordering Section	C,H,K,M,V	B, D, F	A, B	DAL,IRC2,TEC,VIS,VIS2
M8340102^3050%&	305		C,H,K,M,V	B, D	A, B	DAL,IRC2,TEC,VIS,VIS2
M8340102^3090%&	309		C,H,K,M,V	B, D, F	A, B	DAL,IRC2,TEC,VIS,VIS2
	Resistance	Power	Char.	Res.		
Part Number	Value (Ohms)	Rating	(^)	Tolerance	Schematic	Manufacturer
M8340102^3120%&	312		C,H,K,M,V	B, D	A, B	DAL,IRC2,TEC,VIS,VIS2
M8340102^3160%&	316		C,H,K,M,V	B, D, F	A, B	DAL,IRC2,TEC,VIS,VIS2
M8340102^3200%&	320	See PN Ordering Section	C,H,K,M,V	B, D	A, B	DAL,IRC2,TEC,VIS,VIS2
M8340102^3240%&	324		C,H,K,M,V	B, D, F	A, B	DAL,IRC2,TEC,VIS,VIS2
M8340102^3280%&	328		C,H,K,M,V	B, D	A, B	DAL,IRC2,TEC,VIS,VIS2
M8340102^3300%&	330		C,H,K,M,V	G, J	A, B	DAL,IRC2,TEC,VIS,VIS2
M8340102^3320%&	332		C,H,K,M,V	B, D, F	A, B	DAL,IRC2,TEC,VIS,VIS2
M8340102^3360%&	336	See PN Ordering Section	C,H,K,M,V	B, D	A, B	DAL,IRC2,TEC,VIS,VIS2
M8340102^3400%&	340		C,H,K,M,V	B, D, F	A, B	DAL,IRC2,TEC,VIS,VIS2
M8340102^3440%&	344		C,H,K,M,V	B, D	A, B	DAL,IRC2,TEC,VIS,VIS2
M8340102^3480%&	348		C,H,K,M,V	B, D, F	A, B	DAL,IRC2,TEC,VIS,VIS2
M8340102^3520%&	352		C,H,K,M,V	B, D	A, B	DAL,IRC2,TEC,VIS,VIS2
M8340102^3570%&	357	See PN Ordering Section	C,H,K,M,V	B, D, F	A, B	DAL,IRC2,TEC,VIS,VIS2

M8340102^3600%&	360		C,H,K,M,V	G, J	A, B	DAL,IRC2,TEC,VIS,VIS2
	Resistance	Power	Char.	Res.		
Part Number	Value (Ohms)	Rating	(^)	Tolerance	Schematic	Manufacturer
M8340102^3610%&	361		C,H,K,M,V	B, D	A, B	DAL,IRC2,TEC,VIS,VIS2
M8340102^3650%&	365		C,H,K,M,V	B, D, F	A, B	DAL,IRC2,TEC,VIS,VIS2
M8340102^3700%&	370		C,H,K,M,V	B, D	A, B	DAL,IRC2,TEC,VIS,VIS2
M8340102^3740%&	374	See PN Ordering Section	C,H,K,M,V	B, D, F	A, B	DAL,IRC2,TEC,VIS,VIS2
M8340102^3790%&	379		C,H,K,M,V	B, D	A, B	DAL,IRC2,TEC,VIS,VIS2
M8340102^3830%&	383		C,H,K,M,V	B, D, F	A, B	DAL,IRC2,TEC,VIS,VIS2
M8340102^3880%&	388		C,H,K,M,V	B, D	A, B	DAL,IRC2,TEC,VIS,VIS2
M8340102^3900%&	390		C,H,K,M,V	G, J	A, B	DAL,IRC2,TEC,VIS,VIS2
M8340102^3920%&	392	See PN Ordering Section	C,H,K,M,V	B, D, F	A, B	DAL,IRC2,TEC,VIS,VIS2
M8340102^3970%&	397		C,H,K,M,V	B, D	A, B	DAL,IRC2,TEC,VIS,VIS2
M8340102^4020%&	402		C,H,K,M,V	B, D, F	A, B	DAL,IRC2,TEC,VIS,VIS2
M8340102^4070%&	407		C,H,K,M,V	B, D	A, B	DAL,IRC2,TEC,VIS,VIS2
M8340102^4120%&	412		C,H,K,M,V	B, D, F	A, B	DAL,IRC2,TEC,VIS,VIS2
M8340102^4170%&	417	See PN Ordering Section	C,H,K,M,V	B, D	A, B	DAL,IRC2,TEC,VIS,VIS2
	Resistance	Power	Char.	Res.		
Part Number	Value (Ohms)	Rating	(^)	Tolerance	Schematic	Manufacturer
M8340102^4220%&	422		C,H,K,M,V	B, D, F	A, B	DAL,IRC2,TEC,VIS,VIS2
M8340102^4270%&	427		C,H,K,M,V	B, D	A, B	DAL,IRC2,TEC,VIS,VIS2
M8340102^4300%&	430		C,H,K,M,V	G, J	A, B	DAL,IRC2,TEC,VIS,VIS2
M8340102^4320%&	432		C,H,K,M,V	B, D, F	A, B	DAL,IRC2,TEC,VIS,VIS2
M8340102^4370%&	437	See PN Ordering Section	C,H,K,M,V	B, D	A, B	DAL,IRC2,TEC,VIS,VIS2
M8340102^4420%&	442		C,H,K,M,V	B, D, F	A, B	DAL,IRC2,TEC,VIS,VIS2
M8340102^4480%&	448		C,H,K,M,V	B, D	A, B	DAL,IRC2,TEC,VIS,VIS2
M8340102^4530%&	453		C,H,K,M,V	B, D, F	A, B	DAL,IRC2,TEC,VIS,VIS2
M8340102^4590%&	459		C,H,K,M,V	B, D	A, B	DAL,IRC2,TEC,VIS,VIS2
M8340102^4640%&	464	See PN Ordering Section	C,H,K,M,V	B, D, F	A, B	DAL,IRC2,TEC,VIS,VIS2
M8340102^4700%&	470		C,H,K,M,V	B, D, G, J	A, B	DAL,IRC2,TEC,VIS,VIS2
M8340102^4750%&	475		C,H,K,M,V	B, D, F	A, B	DAL,IRC2,TEC,VIS,VIS2
M8340102^4810%&	481		C,H,K,M,V	B, D	A, B	DAL,IRC2,TEC,VIS,VIS2
M8340102^4870%&	487		C,H,K,M,V	B, D, F	A, B	DAL,IRC2,TEC,VIS,VIS2
	Resistance	Power	Char.	Res.		
Part Number	Value (Ohms)	Rating	(^)	Tolerance	Schematic	Manufacturer
M8340102^4930%&	493	See PN Ordering Section	C,H,K,M,V	B, D	A, B	DAL,IRC2,TEC,VIS,VIS2
M8340102^4990%&	499		C,H,K,M,V	B, D, F	A, B	DAL,IRC2,TEC,VIS,VIS2
M8340102^5050%&	505		C,H,K,M,V	B, D	A, B	DAL,IRC2,TEC,VIS,VIS2
M8340102^5100%&	510		C,H,K,M,V	G, J	A, B	DAL,IRC2,TEC,VIS,VIS2
M8340102^5110%&	511		C,H,K,M,V	B, D, F	A, B	DAL,IRC2,TEC,VIS,VIS2
M8340102^5170%&	517	See PN Ordering Section	C,H,K,M,V	B, D	A, B	DAL,IRC2,TEC,VIS,VIS2
M8340102^5230%&	523		C,H,K,M,V	B, D, F	A, B	DAL,IRC2,TEC,VIS,VIS2
M8340102^5300%&	530		C,H,K,M,V	B, D	A, B	DAL,IRC2,TEC,VIS,VIS2
M8340102^5360%&	536		C,H,K,M,V	B, D, F	A, B	DAL,IRC2,TEC,VIS,VIS2
M8340102^5420%&	542		C,H,K,M,V	B, D	A, B	DAL,IRC2,TEC,VIS,VIS2
M8340102^5490%&	549	See PN Ordering Section	C,H,K,M,V	B, D, F	A, B	DAL,IRC2,TEC,VIS,VIS2
M8340102^5560%&	556		C,H,K,M,V	B, D	A, B	DAL,IRC2,TEC,VIS,VIS2

M8340102^5600%&	560		C,H,K,M,V	G, J	A, B	DAL,IRC2,TEC,VIS,VIS2
M8340102^5620%&	562		C,H,K,M,V	B, D, F	A, B	DAL,IRC2,TEC,VIS,VIS2
	Resistance	Power	Char.	Res.		
Part Number	Value (Ohms)	Rating	(^)	Tolerance	Schematic	Manufacturer
M8340102^5690%&	569		C,H,K,M,V	B, D	A, B	DAL,IRC2,TEC,VIS,VIS2
M8340102^5760%&	576	See PN Ordering Section	C,H,K,M,V	B, D, F	A, B	DAL,IRC2,TEC,VIS,VIS2
M8340102^5830%&	583		C,H,K,M,V	B, D	A, B	DAL,IRC2,TEC,VIS,VIS2
M8340102^5900%&	590		C,H,K,M,V	B, D, F	A, B	DAL,IRC2,TEC,VIS,VIS2
M8340102^5970%&	597		C,H,K,M,V	B, D	A, B	DAL,IRC2,TEC,VIS,VIS2
M8340102^6040%&	604		C,H,K,M,V	B, D, F	A, B	DAL,IRC2,TEC,VIS,VIS2
M8340102^6120%&	612	See PN Ordering Section	C,H,K,M,V	B, D	A, B	DAL,IRC2,TEC,VIS,VIS2
M8340102^6190%&	619		C,H,K,M,V	B, D, F	A, B	DAL,IRC2,TEC,VIS,VIS2
M8340102^6200%&	620		C,H,K,M,V	G, J	A, B	DAL,IRC2,TEC,VIS,VIS2
M8340102^6260%&	626		C,H,K,M,V	B, D	A, B	DAL,IRC2,TEC,VIS,VIS2
M8340102^6340%&	634		C,H,K,M,V	B, D, F	A, B	DAL,IRC2,TEC,VIS,VIS2
M8340102^6420%&	642	See PN Ordering Section	C,H,K,M,V	B, D	A, B	DAL,IRC2,TEC,VIS,VIS2
M8340102^6490%&	649		C,H,K,M,V	B, D, F	A, B	DAL,IRC2,TEC,VIS,VIS2
M8340102^6570%&	657		C,H,K,M,V	B, D	A, B	DAL,IRC2,TEC,VIS,VIS2
	Resistance	Power	Char.	Res.		
Part Number	Value (Ohms)	Rating	(^)	Tolerance	Schematic	Manufacturer
M8340102^6650%&	665		C,H,K,M,V	B, D, F	A, B	DAL,IRC2,TEC,VIS,VIS2
M8340102^6730%&	673		C,H,K,M,V	B, D	A, B	DAL,IRC2,TEC,VIS,VIS2
M8340102^6800%&	680	See PN Ordering Section	C,H,K,M,V	G, J	A, B	DAL,IRC2,TEC,VIS,VIS2
M8340102^6810%&	681		C,H,K,M,V	B, D, F	A, B	DAL,IRC2,TEC,VIS,VIS2
M8340102^6900%&	690		C,H,K,M,V	B, D	A, B	DAL,IRC2,TEC,VIS,VIS2
M8340102^6980%&	698		C,H,K,M,V	B, D, F	A, B	DAL,IRC2,TEC,VIS,VIS2
M8340102^7060%&	706		C,H,K,M,V	B, D	A, B	DAL,IRC2,TEC,VIS,VIS2
M8340102^7150%&	715	See PN Ordering Section	C,H,K,M,V	B, D, F	A, B	DAL,IRC2,TEC,VIS,VIS2
M8340102^7230%&	723		C,H,K,M,V	B, D	A, B	DAL,IRC2,TEC,VIS,VIS2
M8340102^7320%&	732		C,H,K,M,V	B, D, F	A, B	DAL,IRC2,TEC,VIS,VIS2
M8340102^7410%&	741		C,H,K,M,V	B, D	A, B	DAL,IRC2,TEC,VIS,VIS2
M8340102^7500%&	750		C,H,K,M,V	B, D, F, G, J	A, B	DAL,IRC2,TEC,VIS,VIS2
M8340102^7590%&	759	See PN Ordering Section	C,H,K,M,V	B, D	A, B	DAL,IRC2,TEC,VIS,VIS2
M8340102^7680%&	768		C,H,K,M,V	B, D, F	A, B	DAL,IRC2,TEC,VIS,VIS2
	Resistance	Power	Char.	Res.		
Part Number	Value (Ohms)	Rating	(^)	Tolerance	Schematic	Manufacturer
M8340102^7770%&	777		C,H,K,M,V	B, D	A, B	DAL,IRC2,TEC,VIS,VIS2
M8340102^7870%&	787		C,H,K,M,V	B, D, F	A, B	DAL,IRC2,TEC,VIS,VIS2
M8340102^7960%&	796		C,H,K,M,V	B, D	A, B	DAL,IRC2,TEC,VIS,VIS2
M8340102^8060%&	806	See PN Ordering Section	C,H,K,M,V	B, D, F	A, B	DAL,IRC2,TEC,VIS,VIS2
M8340102^8160%&	816		C,H,K,M,V	B, D	A, B	DAL,IRC2,TEC,VIS,VIS2
M8340102^8200%&	820		C,H,K,M,V	G, J	A, B	DAL,IRC2,TEC,VIS,VIS2
M8340102^8250%&	825		C,H,K,M,V	B, D, F	A, B	DAL,IRC2,TEC,VIS,VIS2
M8340102^8350%&	835		C,H,K,M,V	B, D	A, B	DAL,IRC2,TEC,VIS,VIS2
M8340102^8450%&	845	See PN Ordering Section	C,H,K,M,V	B, D, F	A, B	DAL,IRC2,TEC,VIS,VIS2
M8340102^8560%&	856		C,H,K,M,V	B, D	A, B	DAL,IRC2,TEC,VIS,VIS2
M8340102^8660%&	866		C,H,K,M,V	B, D, F	A, B	DAL,IRC2,TEC,VIS,VIS2

M8340102^8760%&	876		C,H,K,M,V	B, D	A, B	DAL,IRC2,TEC,VIS,VIS2
M8340102^8870%&	887		C,H,K,M,V	B, D, F	A, B	DAL,IRC2,TEC,VIS,VIS2
M8340102^8980%&	898	See PN Ordering Section	C,H,K,M,V	B, D	A, B	DAL,IRC2,TEC,VIS,VIS2
	Resistance	Power	Char.	Res.		
Part Number	Value (Ohms)	Rating	(^)	Tolerance	Schematic	Manufacturer
M8340102^9090%&	909		C,H,K,M,V	B, D, F	A, B	DAL,IRC2,TEC,VIS,VIS2
M8340102^9100%&	910		C,H,K,M,V	G, J	A, B	DAL,IRC2,TEC,VIS,VIS2
M8340102^9200%&	920		C,H,K,M,V	B, D	A, B	DAL,IRC2,TEC,VIS,VIS2
M8340102^9310%&	931		C,H,K,M,V	B, D, F	A, B	DAL,IRC2,TEC,VIS,VIS2
M8340102^9420%&	942	See PN Ordering Section	C,H,K,M,V	B, D	A, B	DAL,IRC2,TEC,VIS,VIS2
M8340102^9530%&	953		C,H,K,M,V	B, D, F	A, B	DAL,IRC2,TEC,VIS,VIS2
M8340102^9650%&	965		C,H,K,M,V	B, D	A, B	DAL,IRC2,TEC,VIS,VIS2
M8340102^9760%&	976		C,H,K,M,V	B, D, F	A, B	DAL,IRC2,TEC,VIS,VIS2
M8340102^9880%&	988		C,H,K,M,V	B, D	A, B	DAL,IRC2,TEC,VIS,VIS2
	Resistance	Power	Char.	Res.		
Part Number	Value (Ohms)	Rating	(^)	Tolerance	Schematic	Manufacturer

MIL-PRF-83401/2 (RZ020) Film Resistor Networks: 1,000 Ohms Through 9,880 Ohms

	Resistance	Power	Char.	Res.		
Part Number	Value (Ohms)	Rating	(^)	Tolerance	Schematic	Manufacturer
M8340102^1001%&	1,000	See PN Ordering Section	C,H,K,M,V	B, D, F, G, J	A, B	DAL,IRC2,TEC,VIS,VIS2
M8340102^1011%&	1,010		C,H,K,M,V	B, D	A, B	DAL,IRC2,TEC,VIS,VIS2
M8340102^1021%&	1,020		C,H,K,M,V	B, D, F	A, B	DAL,IRC2,TEC,VIS,VIS2
M8340102^1041%&	1,040		C,H,K,M,V	B, D	A, B	DAL,IRC2,TEC,VIS,VIS2
M8340102^1051%&	1,050		C,H,K,M,V	B, D, F	A, B	DAL,IRC2,TEC,VIS,VIS2
M8340102^1061%&	1,060	See PN Ordering Section	C,H,K,M,V	B, D	A, B	DAL,IRC2,TEC,VIS,VIS2
M8340102^1071%&	1,070		C,H,K,M,V	B, D, F	A, B	DAL,IRC2,TEC,VIS,VIS2
M8340102^1091%&	1,090		C,H,K,M,V	B, D	A, B	DAL,IRC2,TEC,VIS,VIS2
M8340102^1101%&	1,100		C,H,K,M,V	B, D, F, G, J	A, B	DAL,IRC2,TEC,VIS,VIS2
M8340102^1111%&	1,110		C,H,K,M,V	B, D	A, B	DAL,IRC2,TEC,VIS,VIS2
M8340102^1131%&	1,130	See PN Ordering Section	C,H,K,M,V	B, D, F	A, B	DAL,IRC2,TEC,VIS,VIS2
M8340102^1141%&	1,140		C,H,K,M,V	B, D	A, B	DAL,IRC2,TEC,VIS,VIS2
M8340102^1151%&	1,150		C,H,K,M,V	B, D, F	A, B	DAL,IRC2,TEC,VIS,VIS2
M8340102^1171%&	1,170		C,H,K,M,V	B, D	A, B	DAL,IRC2,TEC,VIS,VIS2
	Resistance	Power	Char.	Res.		
Part Number	Value (Ohms)	Rating	(^)	Tolerance	Schematic	Manufacturer
M8340102^1181%&	1,180		C,H,K,M,V	B, D, F	A, B	DAL,IRC2,TEC,VIS,VIS2
M8340102^1201%&	1,200	See PN Ordering Section	C,H,K,M,V	B, D, F, G, J	A, B	DAL,IRC2,TEC,VIS,VIS2
M8340102^1211%&	1,210		C,H,K,M,V	B, D, F	A, B	DAL,IRC2,TEC,VIS,VIS2
M8340102^1231%&	1,230		C,H,K,M,V	B, D	A, B	DAL,IRC2,TEC,VIS,VIS2
M8340102^1241%&	1,240		C,H,K,M,V	B, D, F	A, B	DAL,IRC2,TEC,VIS,VIS2
M8340102^1261%&	1,260		C,H,K,M,V	B, D	A, B	DAL,IRC2,TEC,VIS,VIS2
M8340102^1271%&	1,270	See PN Ordering Section	C,H,K,M,V	B, D, F	A, B	DAL,IRC2,TEC,VIS,VIS2
M8340102^1291%&	1,290		C,H,K,M,V	B, D	A, B	DAL,IRC2,TEC,VIS,VIS2

M8340102^1301%&	1,300		C,H,K,M,V	B, D, F, G, J	A, B	DAL,IRC2,TEC,VIS,VIS2
M8340102^1321%&	1,320		C,H,K,M,V	B, D	A, B	DAL,IRC2,TEC,VIS,VIS2
M8340102^1331%&	1,330		C,H,K,M,V	B, D, F	A, B	DAL,IRC2,TEC,VIS,VIS2
M8340102^1351%&	1,350	See PN Ordering Section	C,H,K,M,V	B, D	A, B	DAL,IRC2,TEC,VIS,VIS2
M8340102^1371%&	1,370		C,H,K,M,V	B, D, F	A, B	DAL,IRC2,TEC,VIS,VIS2
M8340102^1381%&	1,380		C,H,K,M,V	B, D	A, B	DAL,IRC2,TEC,VIS,VIS2
	Resistance	Power	Char.	Res.		
Part Number	Value (Ohms)	Rating	(^)	Tolerance	Schematic	Manufacturer
M8340102^1401%&	1,400		C,H,K,M,V	B, D, F	A, B	DAL,IRC2,TEC,VIS,VIS2
M8340102^1421%&	1,420		C,H,K,M,V	B, D	A, B	DAL,IRC2,TEC,VIS,VIS2
M8340102^1431%&	1,430	See PN Ordering Section	C,H,K,M,V	B, D, F	A, B	DAL,IRC2,TEC,VIS,VIS2
M8340102^1451%&	1,450		C,H,K,M,V	B, D	A, B	DAL,IRC2,TEC,VIS,VIS2
M8340102^1471%&	1,470		C,H,K,M,V	B, D, F	A, B	DAL,IRC2,TEC,VIS,VIS2
M8340102^1491%&	1,490		C,H,K,M,V	B, D	A, B	DAL,IRC2,TEC,VIS,VIS2
M8340102^1501%&	1,500		C,H,K,M,V	B, D, F, G, J	A, B	DAL,IRC2,TEC,VIS,VIS2
M8340102^1521%&	1,520	See PN Ordering Section	C,H,K,M,V	B, D	A, B	DAL,IRC2,TEC,VIS,VIS2
M8340102^1541%&	1,540		C,H,K,M,V	B, D, F	A, B	DAL,IRC2,TEC,VIS,VIS2
M8340102^1561%&	1,560		C,H,K,M,V	B, D	A, B	DAL,IRC2,TEC,VIS,VIS2
M8340102^1581%&	1,580		C,H,K,M,V	B, D, F	A, B	DAL,IRC2,TEC,VIS,VIS2
M8340102^1601%&	1,600		C,H,K,M,V	B, D, G, J	A, B	DAL,IRC2,TEC,VIS,VIS2
M8340102^1621%&	1,620	See PN Ordering Section	C,H,K,M,V	B, D, F	A, B	DAL,IRC2,TEC,VIS,VIS2
M8340102^1641%&	1,640		C,H,K,M,V	B, D	A, B	DAL,IRC2,TEC,VIS,VIS2
	Resistance	Power	Char.	Res.		
Part Number	Value (Ohms)	Rating	(^)	Tolerance	Schematic	Manufacturer
M8340102^1651%&	1,650		C,H,K,M,V	B, D, F	A, B	DAL,IRC2,TEC,VIS,VIS2
M8340102^1671%&	1,670		C,H,K,M,V	B, D	A, B	DAL,IRC2,TEC,VIS,VIS2
M8340102^1691%&	1,690		C,H,K,M,V	B, D, F	A, B	DAL,IRC2,TEC,VIS,VIS2
M8340102^1721%&	1,720	See PN Ordering Section	C,H,K,M,V	B, D	A, B	DAL,IRC2,TEC,VIS,VIS2
M8340102^1741%&	1,740		C,H,K,M,V	B, D, F	A, B	DAL,IRC2,TEC,VIS,VIS2
M8340102^1761%&	1,760		C,H,K,M,V	B, D	A, B	DAL,IRC2,TEC,VIS,VIS2
M8340102^1781%&	1,780		C,H,K,M,V	B, D, F	A, B	DAL,IRC2,TEC,VIS,VIS2
M8340102^1801%&	1,800		C,H,K,M,V	B, D, G, J	A, B	DAL,IRC2,TEC,VIS,VIS2
M8340102^1821%&	1,820	See PN Ordering Section	C,H,K,M,V	B, D, F	A, B	DAL,IRC2,TEC,VIS,VIS2
M8340102^1841%&	1,840		C,H,K,M,V	B, D	A, B	DAL,IRC2,TEC,VIS,VIS2
M8340102^1871%&	1,870		C,H,K,M,V	B, D, F	A, B	DAL,IRC2,TEC,VIS,VIS2
M8340102^1891%&	1,890		C,H,K,M,V	B, D	A, B	DAL,IRC2,TEC,VIS,VIS2
M8340102^1911%&	1,910		C,H,K,M,V	B, D, F	A, B	DAL,IRC2,TEC,VIS,VIS2
M8340102^1931%&	1,930	See PN Ordering Section	C,H,K,M,V	B, D	A, B	DAL,IRC2,TEC,VIS,VIS2
	Resistance	Power	Char.	Res.		
Part Number	Value (Ohms)	Rating	(^)	Tolerance	Schematic	Manufacturer
M8340102^1961%&	1,960		C,H,K,M,V	B, D, F	A, B	DAL,IRC2,TEC,VIS,VIS2
M8340102^1981%&	1,980		C,H,K,M,V	B, D	A, B	DAL,IRC2,TEC,VIS,VIS2
M8340102^2001%&	2,000		C,H,K,M,V	B, D, F, G, J	A, B	DAL,IRC2,TEC,VIS,VIS2
M8340102^2031%&	2,030		C,H,K,M,V	B, D	A, B	DAL,IRC2,TEC,VIS,VIS2
M8340102^2051%&	2,050	See PN Ordering Section	C,H,K,M,V	B, D, F	A, B	DAL,IRC2,TEC,VIS,VIS2
M8340102^2081%&	2,080		C,H,K,M,V	B, D	A, B	DAL,IRC2,TEC,VIS,VIS2
M8340102^2101%&	2,100		C,H,K,M,V	B, D, F	A, B	DAL,IRC2,TEC,VIS,VIS2

M8340102^2131%&	2,130		C,H,K,M,V	B, D	A, B	DAL,IRC2,TEC,VIS,VIS2
M8340102^2151%&	2,150		C,H,K,M,V	B, D, F	A, B	DAL,IRC2,TEC,VIS,VIS2
M8340102^2181%&	2,180	See PN Ordering Section	C,H,K,M,V	B, D	A, B	DAL,IRC2,TEC,VIS,VIS2
M8340102^2201%&	2,200		C,H,K,M,V	G, J	A, B	DAL,IRC2,TEC,VIS,VIS2
M8340102^2211%&	2,210		C,H,K,M,V	B, D, F	A, B	DAL,IRC2,TEC,VIS,VIS2
M8340102^2231%&	2,230		C,H,K,M,V	B, D	A, B	DAL,IRC2,TEC,VIS,VIS2
M8340102^2261%&	2,260		C,H,K,M,V	B, D, F	A, B	DAL,IRC2,TEC,VIS,VIS2
	Resistance	Power	Char.	Res.		
Part Number	Value (Ohms)	Rating	(^)	Tolerance	Schematic	Manufacturer
M8340102^2291%&	2,290	See PN Ordering Section	C,H,K,M,V	B, D	A, B	DAL,IRC2,TEC,VIS,VIS2
M8340102^2321%&	2,320		C,H,K,M,V	B, D, F	A, B	DAL,IRC2,TEC,VIS,VIS2
M8340102^2341%&	2,340		C,H,K,M,V	B, D	A, B	DAL,IRC2,TEC,VIS,VIS2
M8340102^2371%&	2,370		C,H,K,M,V	B, D, F	A, B	DAL,IRC2,TEC,VIS,VIS2
M8340102^2401%&	2,400		C,H,K,M,V	B, D, F, G, J	A, B	DAL,IRC2,TEC,VIS,VIS2
M8340102^2431%&	2,430	See PN Ordering Section	C,H,K,M,V	B, D, F	A, B	DAL,IRC2,TEC,VIS,VIS2
M8340102^2461%&	2,460		C,H,K,M,V	B, D	A, B	DAL,IRC2,TEC,VIS,VIS2
M8340102^2491%&	2,490		C,H,K,M,V	B, D, F	A, B	DAL,IRC2,TEC,VIS,VIS2
M8340102^2521%&	2,520		C,H,K,M,V	B, D	A, B	DAL,IRC2,TEC,VIS,VIS2
M8340102^2551%&	2,550		C,H,K,M,V	B, D, F	A, B	DAL,IRC2,TEC,VIS,VIS2
M8340102^2581%&	2,580	See PN Ordering Section	C,H,K,M,V	B, D	A, B	DAL,IRC2,TEC,VIS,VIS2
M8340102^2611%&	2,610		C,H,K,M,V	B, D, F	A, B	DAL,IRC2,TEC,VIS,VIS2
M8340102^2641%&	2,640		C,H,K,M,V	B, D	A, B	DAL,IRC2,TEC,VIS,VIS2
M8340102^2671%&	2,670		C,H,K,M,V	B, D, F	A, B	DAL,IRC2,TEC,VIS,VIS2
	Resistance	Power	Char.	Res.		
Part Number	Value (Ohms)	Rating	(^)	Tolerance	Schematic	Manufacturer
M8340102^2701%&	2,700		C,H,K,M,V	G, J	A, B	DAL,IRC2,TEC,VIS,VIS2
M8340102^2711%&	2,710	See PN Ordering Section	C,H,K,M,V	B, D	A, B	DAL,IRC2,TEC,VIS,VIS2
M8340102^2741%&	2,740		C,H,K,M,V	B, D, F	A, B	DAL,IRC2,TEC,VIS,VIS2
M8340102^2771%&	2,770		C,H,K,M,V	B, D	A, B	DAL,IRC2,TEC,VIS,VIS2
M8340102^2801%&	2,800		C,H,K,M,V	B, D, F	A, B	DAL,IRC2,TEC,VIS,VIS2
M8340102^2841%&	2,840		C,H,K,M,V	B, D	A, B	DAL,IRC2,TEC,VIS,VIS2
M8340102^2871%&	2,870	See PN Ordering Section	C,H,K,M,V	B, D, F	A, B	DAL,IRC2,TEC,VIS,VIS2
M8340102^2911%&	2,910		C,H,K,M,V	B, D	A, B	DAL,IRC2,TEC,VIS,VIS2
M8340102^2941%&	2,940		C,H,K,M,V	B, D, F	A, B	DAL,IRC2,TEC,VIS,VIS2
M8340102^2981%&	2,980		C,H,K,M,V	B, D	A, B	DAL,IRC2,TEC,VIS,VIS2
M8340102^3001%&	3,000		C,H,K,M,V	G, J	A, B	DAL,IRC2,TEC,VIS,VIS2
M8340102^3011%&	3,010	See PN Ordering Section	C,H,K,M,V	B, D, F	A, B	DAL,IRC2,TEC,VIS,VIS2
M8340102^3051%&	3,050		C,H,K,M,V	B, D	A, B	DAL,IRC2,TEC,VIS,VIS2
M8340102^3091%&	3,090		C,H,K,M,V	B, D, F	A, B	DAL,IRC2,TEC,VIS,VIS2
	Resistance	Power	Char.	Res.		
Part Number	Value (Ohms)	Rating	(^)	Tolerance	Schematic	Manufacturer
M8340102^3121%&	3,120		C,H,K,M,V	B, D	A, B	DAL,IRC2,TEC,VIS,VIS2
M8340102^3161%&	3,160		C,H,K,M,V	B, D, F	A, B	DAL,IRC2,TEC,VIS,VIS2
M8340102^3201%&	3,200	See PN Ordering Section	C,H,K,M,V	B, D	A, B	DAL,IRC2,TEC,VIS,VIS2
M8340102^3241%&	3,240		C,H,K,M,V	B, D, F	A, B	DAL,IRC2,TEC,VIS,VIS2
M8340102^3281%&	3,280		C,H,K,M,V	B, D	A, B	DAL,IRC2,TEC,VIS,VIS2
M8340102^3301%&	3,300		C,H,K,M,V	G, J	A, B	DAL,IRC2,TEC,VIS,VIS2

M8340102^3321%&	3,320		C,H,K,M,V	B, D, F	A, B	DAL,IRC2,TEC,VIS,VIS2
M8340102^3361%&	3,360	See PN Ordering Section	C,H,K,M,V	B, D	A, B	DAL,IRC2,TEC,VIS,VIS2
M8340102^3401%&	3,400		C,H,K,M,V	B, D, F	A, B	DAL,IRC2,TEC,VIS,VIS2
M8340102^3441%&	3,440		C,H,K,M,V	B, D	A, B	DAL,IRC2,TEC,VIS,VIS2
M8340102^3481%&	3,480		C,H,K,M,V	B, D, F	A, B	DAL,IRC2,TEC,VIS,VIS2
M8340102^3521%&	3,520		C,H,K,M,V	B, D	A, B	DAL,IRC2,TEC,VIS,VIS2
M8340102^3571%&	3,570	See PN Ordering Section	C,H,K,M,V	B, D, F	A, B	DAL,IRC2,TEC,VIS,VIS2
M8340102^3601%&	3,600		C,H,K,M,V	G, J	A, B	DAL,IRC2,TEC,VIS,VIS2
	Resistance	Power	Char.	Res.		
Part Number	Value (Ohms)	Rating	(^)	Tolerance	Schematic	Manufacturer
M8340102^3611%&	3,610		C,H,K,M,V	B, D	A, B	DAL,IRC2,TEC,VIS,VIS2
M8340102^3651%&	3,650		C,H,K,M,V	B, D, F	A, B	DAL,IRC2,TEC,VIS,VIS2
M8340102^3701%&	3,700		C,H,K,M,V	B, D	A, B	DAL,IRC2,TEC,VIS,VIS2
M8340102^3741%&	3,740	See PN Ordering Section	C,H,K,M,V	B, D, F	A, B	DAL,IRC2,TEC,VIS,VIS2
M8340102^3791%&	3,790		C,H,K,M,V	B, D	A, B	DAL,IRC2,TEC,VIS,VIS2
M8340102^3831%&	3,830		C,H,K,M,V	B, D, F	A, B	DAL,IRC2,TEC,VIS,VIS2
M8340102^3881%&	3,880		C,H,K,M,V	B, D	A, B	DAL,IRC2,TEC,VIS,VIS2
M8340102^3901%&	3,900		C,H,K,M,V	G, J	A, B	DAL,IRC2,TEC,VIS,VIS2
M8340102^3921%&	3,920	See PN Ordering Section	C,H,K,M,V	B, D, F	A, B	DAL,IRC2,TEC,VIS,VIS2
M8340102^3971%&	3,970		C,H,K,M,V	B, D	A, B	DAL,IRC2,TEC,VIS,VIS2
M8340102^4021%&	4,020		C,H,K,M,V	B, D, F	A, B	DAL,IRC2,TEC,VIS,VIS2
M8340102^4071%&	4,070		C,H,K,M,V	B, D	A, B	DAL,IRC2,TEC,VIS,VIS2
M8340102^4121%&	4,120		C,H,K,M,V	B, D, F	A, B	DAL,IRC2,TEC,VIS,VIS2
M8340102^4171%&	4,170	See PN Ordering Section	C,H,K,M,V	B, D	A, B	DAL,IRC2,TEC,VIS,VIS2
	Resistance	Power	Char.	Res.		
Part Number	Value (Ohms)	Rating	(^)	Tolerance	Schematic	Manufacturer
M8340102^4221%&	4,220		C,H,K,M,V	B, D, F	A, B	DAL,IRC2,TEC,VIS,VIS2
M8340102^4271%&	4,270		C,H,K,M,V	B, D	A, B	DAL,IRC2,TEC,VIS,VIS2
M8340102^4301%&	4,300		C,H,K,M,V	G, J	A, B	DAL,IRC2,TEC,VIS,VIS2
M8340102^4321%&	4,320		C,H,K,M,V	B, D, F	A, B	DAL,IRC2,TEC,VIS,VIS2
M8340102^4371%&	4,370	See PN Ordering Section	C,H,K,M,V	B, D	A, B	DAL,IRC2,TEC,VIS,VIS2
M8340102^4421%&	4,420		C,H,K,M,V	B, D, F	A, B	DAL,IRC2,TEC,VIS,VIS2
M8340102^4481%&	4,480		C,H,K,M,V	B, D	A, B	DAL,IRC2,TEC,VIS,VIS2
M8340102^4531%&	4,530		C,H,K,M,V	B, D, F	A, B	DAL,IRC2,TEC,VIS,VIS2
M8340102^4591%&	4,590		C,H,K,M,V	B, D	A, B	DAL,IRC2,TEC,VIS,VIS2
M8340102^4641%&	4,640	See PN Ordering Section	C,H,K,M,V	B, D, F	A, B	DAL,IRC2,TEC,VIS,VIS2
M8340102^4701%&	4,700		C,H,K,M,V	B, D, G, J	A, B	DAL,IRC2,TEC,VIS,VIS2
M8340102^4751%&	4,750		C,H,K,M,V	B, D, F	A, B	DAL,IRC2,TEC,VIS,VIS2
M8340102^4811%&	4,810		C,H,K,M,V	B, D	A, B	DAL,IRC2,TEC,VIS,VIS2
M8340102^4871%&	4,870		C,H,K,M,V	B, D, F	A, B	DAL,IRC2,TEC,VIS,VIS2
	Resistance	Power	Char.	Res.		
Part Number	Value (Ohms)	Rating	(^)	Tolerance	Schematic	Manufacturer
M8340102^4931%&	4,930	See PN Ordering Section	C,H,K,M,V	B, D	A, B	DAL,IRC2,TEC,VIS,VIS2
M8340102^4991%&	4,990		C,H,K,M,V	B, D, F	A, B	DAL,IRC2,TEC,VIS,VIS2
M8340102^5051%&	5,050		C,H,K,M,V	B, D	A, B	DAL,IRC2,TEC,VIS,VIS2
M8340102^5101%&	5,100		C,H,K,M,V	G, J	A, B	DAL,IRC2,TEC,VIS,VIS2
M8340102^5111%&	5,110		C,H,K,M,V	B, D, F	A, B	DAL,IRC2,TEC,VIS,VIS2

M8340102^5171%&	5,170	See PN Ordering Section	C,H,K,M,V	B, D	A, B	DAL,IRC2,TEC,VIS,VIS2
M8340102^5231%&	5,230		C,H,K,M,V	B, D, F	A, B	DAL,IRC2,TEC,VIS,VIS2
M8340102^5301%&	5,300		C,H,K,M,V	B, D	A, B	DAL,IRC2,TEC,VIS,VIS2
M8340102^5361%&	5,360		C,H,K,M,V	B, D, F	A, B	DAL,IRC2,TEC,VIS,VIS2
M8340102^5421%&	5,420		C,H,K,M,V	B, D	A, B	DAL,IRC2,TEC,VIS,VIS2
M8340102^5491%&	5,490	See PN Ordering Section	C,H,K,M,V	B, D, F	A, B	DAL,IRC2,TEC,VIS,VIS2
M8340102^5561%&	5,560		C,H,K,M,V	B, D	A, B	DAL,IRC2,TEC,VIS,VIS2
M8340102^5601%&	5,600		C,H,K,M,V	G, J	A, B	DAL,IRC2,TEC,VIS,VIS2
M8340102^5621%&	5,620		C,H,K,M,V	B, D, F	A, B	DAL,IRC2,TEC,VIS,VIS2
	Resistance	Power	Char.	Res.		
Part Number	Value (Ohms)	Rating	(^)	Tolerance	Schematic	Manufacturer
M8340102^5691%&	5,690		C,H,K,M,V	B, D	A, B	DAL,IRC2,TEC,VIS,VIS2
M8340102^5761%&	5,760	See PN Ordering Section	C,H,K,M,V	B, D, F	A, B	DAL,IRC2,TEC,VIS,VIS2
M8340102^5831%&	5,830		C,H,K,M,V	B, D	A, B	DAL,IRC2,TEC,VIS,VIS2
M8340102^5901%&	5,900		C,H,K,M,V	B, D, F	A, B	DAL,IRC2,TEC,VIS,VIS2
M8340102^5971%&	5,970		C,H,K,M,V	B, D	A, B	DAL,IRC2,TEC,VIS,VIS2
M8340102^6041%&	6,040		C,H,K,M,V	B, D, F	A, B	DAL,IRC2,TEC,VIS,VIS2
M8340102^6121%&	6,120	See PN Ordering Section	C,H,K,M,V	B, D	A, B	DAL,IRC2,TEC,VIS,VIS2
M8340102^6191%&	6,190		C,H,K,M,V	B, D, F	A, B	DAL,IRC2,TEC,VIS,VIS2
M8340102^6201%&	6,200		C,H,K,M,V	G, J	A, B	DAL,IRC2,TEC,VIS,VIS2
M8340102^6261%&	6,260		C,H,K,M,V	B, D	A, B	DAL,IRC2,TEC,VIS,VIS2
M8340102^6341%&	6,340		C,H,K,M,V	B, D, F	A, B	DAL,IRC2,TEC,VIS,VIS2
M8340102^6421%&	6,420	See PN Ordering Section	C,H,K,M,V	B, D	A, B	DAL,IRC2,TEC,VIS,VIS2
M8340102^6491%&	6,490		C,H,K,M,V	B, D, F	A, B	DAL,IRC2,TEC,VIS,VIS2
M8340102^6571%&	6,570		C,H,K,M,V	B, D	A, B	DAL,IRC2,TEC,VIS,VIS2
	Resistance	Power	Char.	Res.		
Part Number	Value (Ohms)	Rating	(^)	Tolerance	Schematic	Manufacturer
M8340102^6651%&	6,650		C,H,K,M,V	B, D, F	A, B	DAL,IRC2,TEC,VIS,VIS2
M8340102^6731%&	6,730		C,H,K,M,V	B, D	A, B	DAL,IRC2,TEC,VIS,VIS2
M8340102^6801%&	6,800	See PN Ordering Section	C,H,K,M,V	G, J	A, B	DAL,IRC2,TEC,VIS,VIS2
M8340102^6811%&	6,810		C,H,K,M,V	B, D, F	A, B	DAL,IRC2,TEC,VIS,VIS2
M8340102^6901%&	6,900		C,H,K,M,V	B, D	A, B	DAL,IRC2,TEC,VIS,VIS2
M8340102^6981%&	6,980		C,H,K,M,V	B, D, F	A, B	DAL,IRC2,TEC,VIS,VIS2
M8340102^7061%&	7,060		C,H,K,M,V	B, D	A, B	DAL,IRC2,TEC,VIS,VIS2
M8340102^7151%&	7,150	See PN Ordering Section	C,H,K,M,V	B, D, F	A, B	DAL,IRC2,TEC,VIS,VIS2
M8340102^7231%&	7,230		C,H,K,M,V	B, D	A, B	DAL,IRC2,TEC,VIS,VIS2
M8340102^7321%&	7,320		C,H,K,M,V	B, D, F	A, B	DAL,IRC2,TEC,VIS,VIS2
M8340102^7411%&	7,410		C,H,K,M,V	B, D	A, B	DAL,IRC2,TEC,VIS,VIS2
M8340102^7501%&	7,500		C,H,K,M,V	B, D, F, G, J	A, B	DAL,IRC2,TEC,VIS,VIS2
M8340102^7591%&	7,590	See PN Ordering Section	C,H,K,M,V	B, D	A, B	DAL,IRC2,TEC,VIS,VIS2
M8340102^7681%&	7,680		C,H,K,M,V	B, D, F	A, B	DAL,IRC2,TEC,VIS,VIS2
	Resistance	Power	Char.	Res.		
Part Number	Value (Ohms)	Rating	(^)	Tolerance	Schematic	Manufacturer
M8340102^7771%&	7,770		C,H,K,M,V	B, D	A, B	DAL,IRC2,TEC,VIS,VIS2
M8340102^7871%&	7,870		C,H,K,M,V	B, D, F	A, B	DAL,IRC2,TEC,VIS,VIS2
M8340102^7961%&	7,960		C,H,K,M,V	B, D	A, B	DAL,IRC2,TEC,VIS,VIS2
M8340102^8061%&	8,060	See PN Ordering Section	C,H,K,M,V	B, D, F	A, B	DAL,IRC2,TEC,VIS,VIS2

M8340102^8161%&	8,160		C,H,K,M,V	B, D	A, B	DAL,IRC2,TEC,VIS,VIS2
M8340102^8201%&	8,200		C,H,K,M,V	G, J	A, B	DAL,IRC2,TEC,VIS,VIS2
M8340102^8251%&	8,250		C,H,K,M,V	B, D, F	A, B	DAL,IRC2,TEC,VIS,VIS2
M8340102^8351%&	8,350		C,H,K,M,V	B, D	A, B	DAL,IRC2,TEC,VIS,VIS2
M8340102^8451%&	8,450	See PN Ordering Section	C,H,K,M,V	B, D, F	A, B	DAL,IRC2,TEC,VIS,VIS2
M8340102^8561%&	8,560		C,H,K,M,V	B, D	A, B	DAL,IRC2,TEC,VIS,VIS2
M8340102^8661%&	8,660		C,H,K,M,V	B, D, F	A, B	DAL,IRC2,TEC,VIS,VIS2
M8340102^8761%&	8,760		C,H,K,M,V	B, D	A, B	DAL,IRC2,TEC,VIS,VIS2
M8340102^8871%&	8,870		C,H,K,M,V	B, D, F	A, B	DAL,IRC2,TEC,VIS,VIS2
M8340102^8981%&	8,980	See PN Ordering Section	C,H,K,M,V	B, D	A, B	DAL,IRC2,TEC,VIS,VIS2
	Resistance	Power	Char.	Res.		
Part Number	Value (Ohms)	Rating	(^)	Tolerance	Schematic	Manufacturer
M8340102^9091%&	9,090		C,H,K,M,V	B, D, F	A, B	DAL,IRC2,TEC,VIS,VIS2
M8340102^9101%&	9,100		C,H,K,M,V	G, J	A, B	DAL,IRC2,TEC,VIS,VIS2
M8340102^9201%&	9,200		C,H,K,M,V	B, D	A, B	DAL,IRC2,TEC,VIS,VIS2
M8340102^9311%&	9,310		C,H,K,M,V	B, D, F	A, B	DAL,IRC2,TEC,VIS,VIS2
M8340102^9421%&	9,420	See PN Ordering Section	C,H,K,M,V	B, D	A, B	DAL,IRC2,TEC,VIS,VIS2
M8340102^9531%&	9,530		C,H,K,M,V	B, D, F	A, B	DAL,IRC2,TEC,VIS,VIS2
M8340102^9651%&	9,650		C,H,K,M,V	B, D	A, B	DAL,IRC2,TEC,VIS,VIS2
M8340102^9761%&	9,760		C,H,K,M,V	B, D, F	A, B	DAL,IRC2,TEC,VIS,VIS2
M8340102^9881%&	9,880		C,H,K,M,V	B, D	A, B	DAL,IRC2,TEC,VIS,VIS2
	Resistance	Power	Char.	Res.		
Part Number	Value (Ohms)	Rating	(^)	Tolerance	Schematic	Manufacturer

MIL-PRF-83401/2 (RZ020) Film Resistor Networks: 10,000 Ohms Through 98,800 Ohms

	Resistance	Power	Char.	Res.		
Part Number	Value (Ohms)	Rating	(^)	Tolerance	Schematic	Manufacturer
M8340102^1002%&	10,000	See PN Ordering Section	C,H,K,M,V	B, D, F, G, J	A, B	DAL,IRC2,TEC,VIS,VIS2
M8340102^1012%&	10,100		C,H,K,M,V	B, D	A, B	DAL,IRC2,TEC
M8340102^1022%&	10,200		C,H,K,M,V	B, D, F	A, B	DAL,IRC2,TEC
M8340102^1042%&	10,400		C,H,K,M,V	B, D	A, B	DAL,IRC2,TEC
M8340102^1052%&	10,500		C,H,K,M,V	B, D, F	A, B	DAL,IRC2,TEC
M8340102^1062%&	10,600	See PN Ordering Section	C,H,K,M,V	B, D	A, B	DAL,IRC2,TEC
M8340102^1072%&	10,700		C,H,K,M,V	B, D, F	A, B	DAL,IRC2,TEC
M8340102^1092%&	10,900		C,H,K,M,V	B, D	A, B	DAL,IRC2,TEC
M8340102^1102%&	11,000		C,H,K,M,V	B, D, F, G, J	A, B	DAL,IRC2,TEC
M8340102^1112%&	11,100		C,H,K,M,V	B, D	A, B	DAL,IRC2,TEC
M8340102^1132%&	11,300	See PN Ordering Section	C,H,K,M,V	B, D, F	A, B	DAL,IRC2,TEC
M8340102^1142%&	11,400		C,H,K,M,V	B, D	A, B	DAL,IRC2,TEC
M8340102^1152%&	11,500		C,H,K,M,V	B, D, F	A, B	DAL,IRC2,TEC
M8340102^1172%&	11,700		C,H,K,M,V	B, D	A, B	DAL,IRC2,TEC
	Resistance	Power	Char.	Res.		
Part Number	Value (Ohms)	Rating	(^)	Tolerance	Schematic	Manufacturer
M8340102^1182%&	11,800		C,H,K,M,V	B, D, F	A, B	DAL,IRC2,TEC

M8340102^1202%&	12,000	See PN Ordering Section	C,H,K,M,V	B, D, F, G, J	A, B	DAL,IRC2,TEC
M8340102^1212%&	12,100		C,H,K,M,V	B, D, F	A, B	DAL,IRC2,TEC
M8340102^1232%&	12,300		C,H,K,M,V	B, D	A, B	DAL,IRC2,TEC
M8340102^1242%&	12,400		C,H,K,M,V	B, D, F	A, B	DAL,IRC2,TEC
M8340102^1262%&	12,600		C,H,K,M,V	B, D	A, B	DAL,IRC2,TEC
M8340102^1272%&	12,700	See PN Ordering Section	C,H,K,M,V	B, D, F	A, B	DAL,IRC2,TEC
M8340102^1292%&	12,900		C,H,K,M,V	B, D	A, B	DAL,IRC2,TEC
M8340102^1302%&	13,000		C,H,K,M,V	B, D, F, G, J	A, B	DAL,IRC2,TEC
M8340102^1322%&	13,200		C,H,K,M,V	B, D	A, B	DAL,IRC2,TEC
M8340102^1332%&	13,300		C,H,K,M,V	B, D, F	A, B	DAL,IRC2,TEC
M8340102^1352%&	13,500	See PN Ordering Section	C,H,K,M,V	B, D	A, B	DAL,IRC2,TEC
M8340102^1372%&	13,700		C,H,K,M,V	B, D, F	A, B	DAL,IRC2,TEC
M8340102^1382%&	13,800		C,H,K,M,V	B, D	A, B	DAL,IRC2,TEC
	Resistance	Power	Char.	Res.		
Part Number	Value (Ohms)	Rating	(^)	Tolerance	Schematic	Manufacturer
M8340102^1402%&	14,000		C,H,K,M,V	B, D, F	A, B	DAL,IRC2,TEC
M8340102^1422%&	14,200		C,H,K,M,V	B, D	A, B	DAL,IRC2,TEC
M8340102^1432%&	14,300	See PN Ordering Section	C,H,K,M,V	B, D, F	A, B	DAL,IRC2,TEC
M8340102^1452%&	14,500		C,H,K,M,V	B, D	A, B	DAL,IRC2,TEC
M8340102^1472%&	14,700		C,H,K,M,V	B, D, F	A, B	DAL,IRC2,TEC
M8340102^1492%&	14,900		C,H,K,M,V	B, D	A, B	DAL,IRC2,TEC
M8340102^1502%&	15,000		C,H,K,M,V	B, D, F, G, J	A, B	DAL,IRC2,TEC
M8340102^1522%&	15,200	See PN Ordering Section	C,H,K,M,V	B, D	A, B	DAL,IRC2,TEC
M8340102^1542%&	15,400		C,H,K,M,V	B, D, F	A, B	DAL,IRC2,TEC
M8340102^1562%&	15,600		C,H,K,M,V	B, D	A, B	DAL,IRC2,TEC
M8340102^1582%&	15,800		C,H,K,M,V	B, D, F	A, B	DAL,IRC2,TEC
M8340102^1602%&	16,000		C,H,K,M,V	B, D, G, J	A, B	DAL,IRC2,TEC
M8340102^1622%&	16,200	See PN Ordering Section	C,H,K,M,V	B, D, F	A, B	DAL,IRC2,TEC
M8340102^1642%&	16,400		C,H,K,M,V	B, D	A, B	DAL,IRC2,TEC
	Resistance	Power	Char.	Res.		
Part Number	Value (Ohms)	Rating	(^)	Tolerance	Schematic	Manufacturer
M8340102^1652%&	16,500		C,H,K,M,V	B, D, F	A, B	DAL,IRC2,TEC
M8340102^1672%&	16,700		C,H,K,M,V	B, D	A, B	DAL,IRC2,TEC
M8340102^1692%&	16,900		C,H,K,M,V	B, D, F	A, B	DAL,IRC2,TEC
M8340102^1722%&	17,200	See PN Ordering Section	C,H,K,M,V	B, D	A, B	DAL,IRC2,TEC
M8340102^1742%&	17,400		C,H,K,M,V	B, D, F	A, B	DAL,IRC2,TEC
M8340102^1762%&	17,600		C,H,K,M,V	B, D	A, B	DAL,IRC2,TEC
M8340102^1782%&	17,800		C,H,K,M,V	B, D, F	A, B	DAL,IRC2,TEC
M8340102^1802%&	18,000		C,H,K,M,V	B, D, G, J	A, B	DAL,IRC2,TEC
M8340102^1822%&	18,200	See PN Ordering Section	C,H,K,M,V	B, D, F	A, B	DAL,IRC2,TEC
M8340102^1842%&	18,400		C,H,K,M,V	B, D	A, B	DAL,IRC2,TEC
M8340102^1872%&	18,700		C,H,K,M,V	B, D, F	A, B	DAL,IRC2,TEC
M8340102^1892%&	18,900		C,H,K,M,V	B, D	A, B	DAL,IRC2,TEC
M8340102^1912%&	19,100		C,H,K,M,V	B, D, F	A, B	DAL,IRC2,TEC
M8340102^1932%&	19,300	See PN Ordering Section	C,H,K,M,V	B, D	A, B	DAL,IRC2,TEC
	Resistance	Power	Char.	Res.		
Part Number	Value (Ohms)	Rating	(^)	Tolerance	Schematic	Manufacturer

M8340102^1962%&	19,600		C,H,K,M,V	B, D, F	A, B	DAL,IRC2,TEC
M8340102^1982%&	19,800		C,H,K,M,V	B, D	A, B	DAL,IRC2,TEC
M8340102^2002%&	20,000		C,H,K,M,V	B, D, F, G, J	A, B	DAL,IRC2,TEC
M8340102^2032%&	20,300		C,H,K,M,V	B, D	A, B	DAL,IRC2,TEC
M8340102^2052%&	20,500	See PN Ordering Section	C,H,K,M,V	B, D, F	A, B	DAL,IRC2,TEC
M8340102^2082%&	20,800		C,H,K,M,V	B, D	A, B	DAL,IRC2,TEC
M8340102^2102%&	21,000		C,H,K,M,V	B, D, F	A, B	DAL,IRC2,TEC
M8340102^2132%&	21,300		C,H,K,M,V	B, D	A, B	DAL,IRC2,TEC
M8340102^2152%&	21,500		C,H,K,M,V	B, D, F	A, B	DAL,IRC2,TEC
M8340102^2182%&	21,800	See PN Ordering Section	C,H,K,M,V	B, D	A, B	DAL,IRC2,TEC
M8340102^2202%&	22,000		C,H,K,M,V	G, J	A, B	DAL,IRC2,TEC
M8340102^2212%&	22,100		C,H,K,M,V	B, D, F	A, B	DAL,IRC2,TEC
M8340102^2232%&	22,300		C,H,K,M,V	B, D	A, B	DAL,IRC2,TEC
M8340102^2262%&	22,600		C,H,K,M,V	B, D, F	A, B	DAL,IRC2,TEC
	Resistance	Power	Char.	Res.		
Part Number	Value (Ohms)	Rating	(^)	Tolerance	Schematic	Manufacturer
M8340102^2292%&	22,900	See PN Ordering Section	C,H,K,M,V	B, D	A, B	DAL,IRC2,TEC
M8340102^2322%&	23,200		C,H,K,M,V	B, D, F	A, B	DAL,IRC2,TEC
M8340102^2342%&	23,400		C,H,K,M,V	B, D	A, B	DAL,IRC2,TEC
M8340102^2372%&	23,700		C,H,K,M,V	B, D, F	A, B	DAL,IRC2,TEC
M8340102^2402%&	24,000		C,H,K,M,V	B, D, F, G, J	A, B	DAL,IRC2,TEC
M8340102^2432%&	24,300	See PN Ordering Section	C,H,K,M,V	B, D, F	A, B	DAL,IRC2,TEC
M8340102^2462%&	24,600		C,H,K,M,V	B, D	A, B	DAL,IRC2,TEC
M8340102^2492%&	24,900		C,H,K,M,V	B, D, F	A, B	DAL,IRC2,TEC
M8340102^2522%&	25,200		C,H,K,M,V	B, D	A, B	DAL,IRC2,TEC
M8340102^2552%&	25,500		C,H,K,M,V	B, D, F	A, B	DAL,IRC2,TEC
M8340102^2582%&	25,800	See PN Ordering Section	C,H,K,M,V	B, D	A, B	DAL,IRC2,TEC
M8340102^2612%&	26,100		C,H,K,M,V	B, D, F	A, B	DAL,IRC2,TEC
M8340102^2642%&	26,400		C,H,K,M,V	B, D	A, B	DAL,IRC2,TEC
M8340102^2672%&	26,700		C,H,K,M,V	B, D, F	A, B	DAL,IRC2,TEC
	Resistance	Power	Char.	Res.		
Part Number	Value (Ohms)	Rating	(^)	Tolerance	Schematic	Manufacturer
M8340102^2702%&	27,000		C,H,K,M,V	G, J	A, B	DAL,IRC2,TEC
M8340102^2712%&	27,100	See PN Ordering Section	C,H,K,M,V	B, D	A, B	DAL,IRC2,TEC
M8340102^2742%&	27,400		C,H,K,M,V	B, D, F	A, B	DAL,IRC2,TEC
M8340102^2772%&	27,700		C,H,K,M,V	B, D	A, B	DAL,IRC2,TEC
M8340102^2802%&	28,000		C,H,K,M,V	B, D, F	A, B	DAL,IRC2,TEC
M8340102^2842%&	28,400		C,H,K,M,V	B, D	A, B	DAL,IRC2,TEC
M8340102^2872%&	28,700	See PN Ordering Section	C,H,K,M,V	B, D, F	A, B	DAL,IRC2,TEC
M8340102^2912%&	29,100		C,H,K,M,V	B, D	A, B	DAL,IRC2,TEC
M8340102^2942%&	29,400		C,H,K,M,V	B, D, F	A, B	DAL,IRC2,TEC
M8340102^2982%&	29,800		C,H,K,M,V	B, D	A, B	DAL,IRC2,TEC
M8340102^3002%&	30,000		C,H,K,M,V	G, J	A, B	DAL,IRC2,TEC
M8340102^3012%&	30,100	See PN Ordering Section	C,H,K,M,V	B, D, F	A, B	DAL,IRC2,TEC
M8340102^3052%&	30,500		C,H,K,M,V	B, D	A, B	DAL,IRC2,TEC
M8340102^3092%&	30,900		C,H,K,M,V	B, D, F	A, B	DAL,IRC2,TEC
	Resistance	Power	Char.	Res.		

Part Number	Value (Ohms)	Rating	(^)	Tolerance	Schematic	Manufacturer
M8340102^3122%&	31,200		C,H,K,M,V	B, D	A, B	DAL,IRC2,TEC
M8340102^3162%&	31,600		C,H,K,M,V	B, D, F	A, B	DAL,IRC2,TEC
M8340102^3202%&	32,000	See PN Ordering Section	C,H,K,M,V	B, D	A, B	DAL,IRC2,TEC
M8340102^3242%&	32,400		C,H,K,M,V	B, D, F	A, B	DAL,IRC2,TEC
M8340102^3282%&	32,800		C,H,K,M,V	B, D	A, B	DAL,IRC2,TEC
M8340102^3302%&	33,000		C,H,K,M,V	G, J	A, B	DAL,IRC2,TEC
M8340102^3322%&	33,200		C,H,K,M,V	B, D, F	A, B	DAL,IRC2,TEC
M8340102^3362%&	33,600	See PN Ordering Section	C,H,K,M,V	B, D	A, B	DAL,IRC2,TEC
M8340102^3402%&	34,000		C,H,K,M,V	B, D, F	A, B	DAL,IRC2,TEC
M8340102^3442%&	34,400		C,H,K,M,V	B, D	A, B	DAL,IRC2,TEC
M8340102^3482%&	34,800		C,H,K,M,V	B, D, F	A, B	DAL,IRC2,TEC
M8340102^3522%&	35,200		C,H,K,M,V	B, D	A, B	DAL,IRC2,TEC
M8340102^3572%&	35,700	See PN Ordering Section	C,H,K,M,V	B, D, F	A, B	DAL,IRC2,TEC
M8340102^3602%&	36,000		C,H,K,M,V	G, J	A, B	DAL,IRC2,TEC
	Resistance	Power	Char.	Res.		
Part Number	Value (Ohms)	Rating	(^)	Tolerance	Schematic	Manufacturer
M8340102^3612%&	36,100		C,H,K,M,V	B, D	A, B	DAL,IRC2,TEC
M8340102^3652%&	36,500		C,H,K,M,V	B, D, F	A, B	DAL,IRC2,TEC
M8340102^3702%&	37,000		C,H,K,M,V	B, D	A, B	DAL,IRC2,TEC
M8340102^3742%&	37,400	See PN Ordering Section	C,H,K,M,V	B, D, F	A, B	DAL,IRC2,TEC
M8340102^3792%&	37,900		C,H,K,M,V	B, D	A, B	DAL,IRC2,TEC
M8340102^3832%&	38,300		C,H,K,M,V	B, D, F	A, B	DAL,IRC2,TEC
M8340102^3882%&	38,800		C,H,K,M,V	B, D	A, B	DAL,IRC2,TEC
M8340102^3902%&	39,000		C,H,K,M,V	G, J	A, B	DAL,IRC2,TEC
M8340102^3922%&	39,200	See PN Ordering Section	C,H,K,M,V	B, D, F	A, B	DAL,IRC2,TEC
M8340102^3972%&	39,700		C,H,K,M,V	B, D	A, B	DAL,IRC2,TEC
M8340102^4022%&	40,200		C,H,K,M,V	B, D, F	A, B	DAL,IRC2,TEC
M8340102^4072%&	40,700		C,H,K,M,V	B, D	A, B	DAL,IRC2,TEC
M8340102^4122%&	41,200		C,H,K,M,V	B, D, F	A, B	DAL,IRC2,TEC
M8340102^4172%&	41,700	See PN Ordering Section	C,H,K,M,V	B, D	A, B	DAL,IRC2,TEC
	Resistance	Power	Char.	Res.		
Part Number	Value (Ohms)	Rating	(^)	Tolerance	Schematic	Manufacturer
M8340102^4222%&	42,200		C,H,K,M,V	B, D, F	A, B	DAL,IRC2,TEC
M8340102^4272%&	42,700		C,H,K,M,V	B, D	A, B	DAL,IRC2,TEC
M8340102^4302%&	43,000		C,H,K,M,V	G, J	A, B	DAL,IRC2,TEC
M8340102^4322%&	43,200		C,H,K,M,V	B, D, F	A, B	DAL,IRC2,TEC
M8340102^4372%&	43,700	See PN Ordering Section	C,H,K,M,V	B, D	A, B	DAL,IRC2,TEC
M8340102^4422%&	44,200		C,H,K,M,V	B, D, F	A, B	DAL,IRC2,TEC
M8340102^4482%&	44,800		C,H,K,M,V	B, D	A, B	DAL,IRC2,TEC
M8340102^4532%&	45,300		C,H,K,M,V	B, D, F	A, B	DAL,IRC2,TEC
M8340102^4592%&	45,900		C,H,K,M,V	B, D	A, B	DAL,IRC2,TEC
M8340102^4642%&	46,400	See PN Ordering Section	C,H,K,M,V	B, D, F	A, B	DAL,IRC2,TEC
M8340102^4702%&	47,000		C,H,K,M,V	B, D, G, J	A, B	DAL,IRC2,TEC
M8340102^4752%&	47,500		C,H,K,M,V	B, D, F	A, B	DAL,IRC2,TEC
M8340102^4812%&	48,100		C,H,K,M,V	B, D	A, B	DAL,IRC2,TEC
M8340102^4872%&	48,700		C,H,K,M,V	B, D, F	A, B	DAL,IRC2,TEC

	Resistance	Power	Char.	Res.		
Part Number	Value (Ohms)	Rating	(^)	Tolerance	Schematic	Manufacturer
M8340102^4932%&	49,300	See PN Ordering Section	C,H,K,M,V	B, D	A, B	DAL,IRC2,TEC
M8340102^4992%&	49,900		C,H,K,M,V	B, D, F	A, B	DAL,IRC2,TEC
M8340102^5052%&	50,500		C,H,K,M,V	B, D	A, B	DAL,IRC2,TEC
M8340102^5102%&	51,000		C,H,K,M,V	G, J	A, B	DAL,IRC2,TEC
M8340102^5112%&	51,100		C,H,K,M,V	B, D, F	A, B	DAL,IRC2,TEC
M8340102^5172%&	51,700	See PN Ordering Section	C,H,K,M,V	B, D	A, B	DAL,IRC2,TEC
M8340102^5232%&	52,300		C,H,K,M,V	B, D, F	A, B	DAL,IRC2,TEC
M8340102^5302%&	53,000		C,H,K,M,V	B, D	A, B	DAL,IRC2,TEC
M8340102^5362%&	53,600		C,H,K,M,V	B, D, F	A, B	DAL,IRC2,TEC
M8340102^5422%&	54,200		C,H,K,M,V	B, D	A, B	DAL,IRC2,TEC
M8340102^5492%&	54,900	See PN Ordering Section	C,H,K,M,V	B, D, F	A, B	DAL,IRC2,TEC
M8340102^5562%&	55,600		C,H,K,M,V	B, D	A, B	DAL,IRC2,TEC
M8340102^5602%&	56,000		C,H,K,M,V	G, J	A, B	DAL,IRC2,TEC
M8340102^5622%&	56,200		C,H,K,M,V	B, D, F	A, B	DAL,IRC2,TEC
	Resistance	Power	Char.	Res.		
Part Number	Value (Ohms)	Rating	(^)	Tolerance	Schematic	Manufacturer
M8340102^5692%&	56,900		C,H,K,M,V	B, D	A, B	DAL,IRC2,TEC
M8340102^5762%&	57,600	See PN Ordering Section	C,H,K,M,V	B, D, F	A, B	DAL,IRC2,TEC
M8340102^5832%&	58,300		C,H,K,M,V	B, D	A, B	DAL,IRC2,TEC
M8340102^5902%&	59,000		C,H,K,M,V	B, D, F	A, B	DAL,IRC2,TEC
M8340102^5972%&	59,700		C,H,K,M,V	B, D	A, B	DAL,IRC2,TEC
M8340102^6042%&	60,400		C,H,K,M,V	B, D, F	A, B	DAL,IRC2,TEC
M8340102^6122%&	61,200	See PN Ordering Section	C,H,K,M,V	B, D	A, B	DAL,IRC2,TEC
M8340102^6192%&	61,900		C,H,K,M,V	B, D, F	A, B	DAL,IRC2,TEC
M8340102^6202%&	62,000		C,H,K,M,V	G, J	A, B	DAL,IRC2,TEC
M8340102^6262%&	62,600		C,H,K,M,V	B, D	A, B	DAL,IRC2,TEC
M8340102^6342%&	63,400		C,H,K,M,V	B, D, F	A, B	DAL,IRC2,TEC
M8340102^6422%&	64,200	See PN Ordering Section	C,H,K,M,V	B, D	A, B	DAL,IRC2,TEC
M8340102^6492%&	64,900		C,H,K,M,V	B, D, F	A, B	DAL,IRC2,TEC
M8340102^6572%&	65,700		C,H,K,M,V	B, D	A, B	DAL,IRC2,TEC
	Resistance	Power	Char.	Res.		
Part Number	Value (Ohms)	Rating	(^)	Tolerance	Schematic	Manufacturer
M8340102^6652%&	66,500		C,H,K,M,V	B, D, F	A, B	DAL,IRC2,TEC
M8340102^6732%&	67,300		C,H,K,M,V	B, D	A, B	DAL,IRC2,TEC
M8340102^6802%&	68,000	See PN Ordering Section	C,H,K,M,V	G, J	A, B	DAL,IRC2,TEC
M8340102^6812%&	68,100		C,H,K,M,V	B, D, F	A, B	DAL,IRC2,TEC
M8340102^6902%&	69,000		C,H,K,M,V	B, D	A, B	DAL,IRC2,TEC
M8340102^6982%&	69,800		C,H,K,M,V	B, D, F	A, B	DAL,IRC2,TEC
M8340102^7062%&	70,600		C,H,K,M,V	B, D	A, B	DAL,IRC2,TEC
M8340102^7152%&	71,500	See PN Ordering Section	C,H,K,M,V	B, D, F	A, B	DAL,IRC2,TEC
M8340102^7232%&	72,300		C,H,K,M,V	B, D	A, B	DAL,IRC2,TEC
M8340102^7322%&	73,200		C,H,K,M,V	B, D, F	A, B	DAL,IRC2,TEC
M8340102^7412%&	74,100		C,H,K,M,V	B, D	A, B	DAL,IRC2,TEC
M8340102^7502%&	75,000		C,H,K,M,V	B, D, F, G, J	A, B	DAL,IRC2,TEC
M8340102^7592%&	75,900	See PN Ordering Section	C,H,K,M,V	B, D	A, B	DAL,IRC2,TEC

M8340102^7682%&	76,800		C,H,K,M,V	B, D, F	A, B	DAL,IRC2,TEC
	Resistance	Power	Char.	Res.		
Part Number	Value (Ohms)	Rating	(^)	Tolerance	Schematic	Manufacturer
M8340102^7772%&	77,700		C,H,K,M,V	B, D	A, B	DAL,IRC2,TEC
M8340102^7872%&	78,700		C,H,K,M,V	B, D, F	A, B	DAL,IRC2,TEC
M8340102^7962%&	79,600		C,H,K,M,V	B, D	A, B	DAL,IRC2,TEC
M8340102^8062%&	80,600	See PN Ordering Section	C,H,K,M,V	B, D, F	A, B	DAL,IRC2,TEC
M8340102^8162%&	81,600		C,H,K,M,V	B, D	A, B	DAL,IRC2,TEC
M8340102^8202%&	82,000		C,H,K,M,V	G, J	A, B	DAL,IRC2,TEC
M8340102^8252%&	82,500		C,H,K,M,V	B, D, F	A, B	DAL,IRC2,TEC
M8340102^8352%&	83,500		C,H,K,M,V	B, D	A, B	DAL,IRC2,TEC
M8340102^8452%&	84,500	See PN Ordering Section	C,H,K,M,V	B, D, F	A, B	DAL,IRC2,TEC
M8340102^8562%&	85,600		C,H,K,M,V	B, D	A, B	DAL,IRC2,TEC
M8340102^8662%&	86,600		C,H,K,M,V	B, D, F	A, B	DAL,IRC2,TEC
M8340102^8762%&	87,600		C,H,K,M,V	B, D	A, B	DAL,IRC2,TEC
M8340102^8872%&	88,700		C,H,K,M,V	B, D, F	A, B	DAL,IRC2,TEC
M8340102^8982%&	89,800	See PN Ordering Section	C,H,K,M,V	B, D	A, B	DAL,IRC2,TEC
	Resistance	Power	Char.	Res.		
Part Number	Value (Ohms)	Rating	(^)	Tolerance	Schematic	Manufacturer
M8340102^9092%&	90,900		C,H,K,M,V	B, D, F	A, B	DAL,IRC2,TEC
M8340102^9102%&	91,000		C,H,K,M,V	G, J	A, B	DAL,IRC2,TEC
M8340102^9202%&	92,000		C,H,K,M,V	B, D	A, B	DAL,IRC2,TEC
M8340102^9312%&	93,100		C,H,K,M,V	B, D, F	A, B	DAL,IRC2,TEC
M8340102^9422%&	94,200	See PN Ordering Section	C,H,K,M,V	B, D	A, B	DAL,IRC2,TEC
M8340102^9532%&	95,300		C,H,K,M,V	B, D, F	A, B	DAL,IRC2,TEC
M8340102^9652%&	96,500		C,H,K,M,V	B, D	A, B	DAL,IRC2,TEC
M8340102^9762%&	97,600		C,H,K,M,V	B, D, F	A, B	DAL,IRC2,TEC
M8340102^9882%&	98,800		C,H,K,M,V	B, D	A, B	DAL,IRC2,TEC
	Resistance	Power	Char.	Res.		
Part Number	Value (Ohms)	Rating	(^)	Tolerance	Schematic	Manufacturer

MIL-PRF-83401/2 (RZ020) Film Resistor Networks: 100,000 Ohms Through 1,000,000 Ohms

	Resistance	Power	Char.	Res.		
Part Number	Value (Ohms)	Rating	(^)	Tolerance	Schematic	Manufacturer
M8340102^1003%&	100,000	See PN Ordering Section	C,H,K,M,V	B, D, F, G, J	A, B	DAL,IRC2,TEC
M8340102^1013%&	101,000		C,H,K,M,V	B, D	A, B	DAL
M8340102^1023%&	102,000		C,H,K,M,V	B, D, F	A, B	DAL
M8340102^1043%&	104,000		C,H,K,M,V	B, D	A, B	DAL
M8340102^1053%&	105,000		C,H,K,M,V	B, D, F	A, B	DAL
M8340102^1063%&	106,000	See PN Ordering Section	C,H,K,M,V	B, D	A, B	DAL
M8340102^1073%&	107,000		C,H,K,M,V	B, D, F	A, B	DAL
M8340102^1093%&	109,000		C,H,K,M,V	B, D	A, B	DAL
M8340102^1103%&	110,000		C,H,K,M,V	B, D, F, G, J	A, B	DAL
M8340102^1113%&	111,000		C,H,K,M,V	B, D	A, B	DAL

M8340102^1133%&	113,000	See PN Ordering Section	C,H,K,M,V	B, D, F	A, B	DAL
M8340102^1143%&	114,000		C,H,K,M,V	B, D	A, B	DAL
M8340102^1153%&	115,000		C,H,K,M,V	B, D, F	A, B	DAL
M8340102^1173%&	117,000		C,H,K,M,V	B, D	A, B	DAL
	Resistance	Power	Char.	Res.		
Part Number	Value (Ohms)	Rating	(^)	Tolerance	Schematic	Manufacturer
M8340102^1183%&	118,000		C,H,K,M,V	B, D, F	A, B	DAL
M8340102^1203%&	120,000	See PN Ordering Section	C,H,K,M,V	B, D, F, G, J	A, B	DAL
M8340102^1213%&	121,000		C,H,K,M,V	B, D, F	A, B	DAL
M8340102^1233%&	123,000		C,H,K,M,V	B, D	A, B	DAL
M8340102^1243%&	124,000		C,H,K,M,V	B, D, F	A, B	DAL
M8340102^1263%&	126,000		C,H,K,M,V	B, D	A, B	DAL
M8340102^1273%&	127,000	See PN Ordering Section	C,H,K,M,V	B, D, F	A, B	DAL
M8340102^1293%&	129,000		C,H,K,M,V	B, D	A, B	DAL
M8340102^1303%&	130,000		C,H,K,M,V	B, D, F, G, J	A, B	DAL
M8340102^1323%&	132,000		C,H,K,M,V	B, D	A, B	DAL
M8340102^1333%&	133,000		C,H,K,M,V	B, D, F	A, B	DAL
M8340102^1353%&	135,000	See PN Ordering Section	C,H,K,M,V	B, D	A, B	DAL
M8340102^1373%&	137,000		C,H,K,M,V	B, D, F	A, B	DAL
M8340102^1383%&	138,000		C,H,K,M,V	B, D	A, B	DAL
	Resistance	Power	Char.	Res.		
Part Number	Value (Ohms)	Rating	(^)	Tolerance	Schematic	Manufacturer
M8340102^1403%&	140,000		C,H,K,M,V	B, D, F	A, B	DAL
M8340102^1423%&	142,000		C,H,K,M,V	B, D	A, B	DAL
M8340102^1433%&	143,000	See PN Ordering Section	C,H,K,M,V	B, D, F	A, B	DAL
M8340102^1453%&	145,000		C,H,K,M,V	B, D	A, B	DAL
M8340102^1473%&	147,000		C,H,K,M,V	B, D, F	A, B	DAL
M8340102^1493%&	149,000		C,H,K,M,V	B, D	A, B	DAL
M8340102^1503%&	150,000		C,H,K,M,V	B, D, F, G, J	A, B	DAL
M8340102^1523%&	152,000	See PN Ordering Section	C,H,K,M,V	B, D	A, B	DAL
M8340102^1543%&	154,000		C,H,K,M,V	B, D, F	A, B	DAL
M8340102^1563%&	156,000		C,H,K,M,V	B, D	A, B	DAL
M8340102^1583%&	158,000		C,H,K,M,V	B, D, F	A, B	DAL
M8340102^1603%&	160,000		C,H,K,M,V	B, D, G, J	A, B	DAL
M8340102^1623%&	162,000	See PN Ordering Section	C,H,K,M,V	B, D, F	A, B	DAL
M8340102^1643%&	164,000		C,H,K,M,V	B, D	A, B	DAL
	Resistance	Power	Char.	Res.		
Part Number	Value (Ohms)	Rating	(^)	Tolerance	Schematic	Manufacturer
M8340102^1653%&	165,000		C,H,K,M,V	B, D, F	A, B	DAL
M8340102^1673%&	167,000		C,H,K,M,V	B, D	A, B	DAL
M8340102^1693%&	169,000		C,H,K,M,V	B, D, F	A, B	DAL
M8340102^1723%&	172,000	See PN Ordering Section	C,H,K,M,V	B, D	A, B	DAL
M8340102^1743%&	174,000		C,H,K,M,V	B, D, F	A, B	DAL
M8340102^1763%&	176,000		C,H,K,M,V	B, D	A, B	DAL
M8340102^1783%&	178,000		C,H,K,M,V	B, D, F	A, B	DAL
M8340102^1803%&	180,000		C,H,K,M,V	B, D, G, J	A, B	DAL
M8340102^1823%&	182,000	See PN Ordering Section	C,H,K,M,V	B, D, F	A, B	DAL

M8340102^1843%&	184,000		C,H,K,M,V	B, D	A, B	DAL
M8340102^1873%&	187,000		C,H,K,M,V	B, D, F	A, B	DAL
M8340102^1893%&	189,000		C,H,K,M,V	B, D	A, B	DAL
M8340102^1913%&	191,000		C,H,K,M,V	B, D, F	A, B	DAL
M8340102^1933%&	193,000	See PN Ordering Section	C,H,K,M,V	B, D	A, B	DAL
	Resistance	Power	Char.	Res.		
Part Number	Value (Ohms)	Rating	(^)	Tolerance	Schematic	Manufacturer
M8340102^1963%&	196,000		C,H,K,M,V	B, D, F	A, B	DAL
M8340102^1983%&	198,000		C,H,K,M,V	B, D	A, B	DAL
M8340102^2003%&	200,000		C,H,K,M,V	B, D, F, G, J	A, B	DAL
M8340102^2033%&	203,000		C,H,K,M,V	B, D	A, B	DAL
M8340102^2053%&	205,000	See PN Ordering Section	C,H,K,M,V	B, D, F	A, B	DAL
M8340102^2083%&	208,000		C,H,K,M,V	B, D	A, B	DAL
M8340102^2103%&	210,000		C,H,K,M,V	B, D, F	A, B	DAL
M8340102^2133%&	213,000		C,H,K,M,V	B, D	A, B	DAL
M8340102^2153%&	215,000		C,H,K,M,V	B, D, F	A, B	DAL
M8340102^2183%&	218,000	See PN Ordering Section	C,H,K,M,V	B, D	A, B	DAL
M8340102^2203%&	220,000		C,H,K,M,V	G, J	A, B	DAL
M8340102^2213%&	221,000		C,H,K,M,V	B, D, F	A, B	DAL
M8340102^2233%&	223,000		C,H,K,M,V	B, D	A, B	DAL
M8340102^2263%&	226,000		C,H,K,M,V	B, D, F	A, B	DAL
	Resistance	Power	Char.	Res.		
Part Number	Value (Ohms)	Rating	(^)	Tolerance	Schematic	Manufacturer
M8340102^2293%&	229,000	See PN Ordering Section	C,H,K,M,V	B, D	A, B	DAL
M8340102^2323%&	232,000		C,H,K,M,V	B, D, F	A, B	DAL
M8340102^2343%&	234,000		C,H,K,M,V	B, D	A, B	DAL
M8340102^2373%&	237,000		C,H,K,M,V	B, D, F	A, B	DAL
M8340102^2403%&	240,000		C,H,K,M,V	B, D, F, G, J	A, B	DAL
M8340102^2433%&	243,000	See PN Ordering Section	C,H,K,M,V	B, D, F	A, B	DAL
M8340102^2463%&	246,000		C,H,K,M,V	B, D	A, B	DAL
M8340102^2493%&	249,000		C,H,K,M,V	B, D, F	A, B	DAL
M8340102^2523%&	252,000		C,H,K,M,V	B, D	A, B	DAL
M8340102^2553%&	255,000		C,H,K,M,V	B, D, F	A, B	DAL
M8340102^2583%&	258,000	See PN Ordering Section	C,H,K,M,V	B, D	A, B	DAL
M8340102^2613%&	261,000		C,H,K,M,V	B, D, F	A, B	DAL
M8340102^2643%&	264,000		C,H,K,M,V	B, D	A, B	DAL
M8340102^2673%&	267,000		C,H,K,M,V	B, D, F	A, B	DAL
	Resistance	Power	Char.	Res.		
Part Number	Value (Ohms)	Rating	(^)	Tolerance	Schematic	Manufacturer
M8340102^2703%&	270,000		C,H,K,M,V	G, J	A, B	DAL
M8340102^2713%&	271,000	See PN Ordering Section	C,H,K,M,V	B, D	A, B	DAL
M8340102^2743%&	274,000		C,H,K,M,V	B, D, F	A, B	DAL
M8340102^2773%&	277,000		C,H,K,M,V	B, D	A, B	DAL
M8340102^2803%&	280,000		C,H,K,M,V	B, D, F	A, B	DAL
M8340102^2843%&	284,000		C,H,K,M,V	B, D	A, B	DAL
M8340102^2873%&	287,000	See PN Ordering Section	C,H,K,M,V	B, D, F	A, B	DAL
M8340102^2913%&	291,000		C,H,K,M,V	B, D	A, B	DAL

M8340102^2943%&	294,000		C,H,K,M,V	B, D, F	A, B	DAL
M8340102^2983%&	298,000		C,H,K,M,V	B, D	A, B	DAL
M8340102^3003%&	300,000		C,H,K,M,V	G, J	A, B	DAL
M8340102^3013%&	301,000	See PN Ordering Section	C,H,K,M,V	B, D, F	A, B	DAL
M8340102^3053%&	305,000		C,H,K,M,V	B, D	A, B	DAL
M8340102^3093%&	309,000		C,H,K,M,V	B, D, F	A, B	DAL
	Resistance	Power	Char.	Res.		
Part Number	Value (Ohms)	Rating	(^)	Tolerance	Schematic	Manufacturer
M8340102^3123%&	312,000		C,H,K,M,V	B, D	A, B	DAL
M8340102^3163%&	316,000		C,H,K,M,V	B, D, F	A, B	DAL
M8340102^3203%&	320,000	See PN Ordering Section	C,H,K,M,V	B, D	A, B	DAL
M8340102^3243%&	324,000		C,H,K,M,V	B, D, F	A, B	DAL
M8340102^3283%&	328,000		C,H,K,M,V	B, D	A, B	DAL
M8340102^3303%&	330,000		C,H,K,M,V	G, J	A, B	DAL
M8340102^3323%&	332,000		C,H,K,M,V	B, D, F	A, B	DAL
M8340102^3363%&	336,000	See PN Ordering Section	C,H,K,M,V	B, D	A, B	DAL
M8340102^3403%&	340,000		C,H,K,M,V	B, D, F	A, B	DAL
M8340102^3443%&	344,000		C,H,K,M,V	B, D	A, B	DAL
M8340102^3483%&	348,000		C,H,K,M,V	B, D, F	A, B	DAL
M8340102^3523%&	352,000		C,H,K,M,V	B, D	A, B	DAL
M8340102^3573%&	357,000	See PN Ordering Section	C,H,K,M,V	B, D, F	A, B	DAL
M8340102^3603%&	360,000		C,H,K,M,V	G, J	A, B	DAL
	Resistance	Power	Char.	Res.		
Part Number	Value (Ohms)	Rating	(^)	Tolerance	Schematic	Manufacturer
M8340102^3613%&	361,000		C,H,K,M,V	B, D	A, B	DAL
M8340102^3653%&	365,000		C,H,K,M,V	B, D, F	A, B	DAL
M8340102^3703%&	370,000		C,H,K,M,V	B, D	A, B	DAL
M8340102^3743%&	374,000	See PN Ordering Section	C,H,K,M,V	B, D, F	A, B	DAL
M8340102^3793%&	379,000		C,H,K,M,V	B, D	A, B	DAL
M8340102^3833%&	383,000		C,H,K,M,V	B, D, F	A, B	DAL
M8340102^3883%&	388,000		C,H,K,M,V	B, D	A, B	DAL
M8340102^3903%&	390,000		C,H,K,M,V	G, J	A, B	DAL
M8340102^3923%&	392,000	See PN Ordering Section	C,H,K,M,V	B, D, F	A, B	DAL
M8340102^3973%&	397,000		C,H,K,M,V	B, D	A, B	DAL
M8340102^4023%&	402,000		C,H,K,M,V	B, D, F	A, B	DAL
M8340102^4073%&	407,000		C,H,K,M,V	B, D	A, B	DAL
M8340102^4123%&	412,000		C,H,K,M,V	B, D, F	A, B	DAL
M8340102^4173%&	417,000	See PN Ordering Section	C,H,K,M,V	B, D	A, B	DAL
	Resistance	Power	Char.	Res.		
Part Number	Value (Ohms)	Rating	(^)	Tolerance	Schematic	Manufacturer
M8340102^4223%&	422,000		C,H,K,M,V	B, D, F	A, B	DAL
M8340102^4273%&	427,000		C,H,K,M,V	B, D	A, B	DAL
M8340102^4303%&	430,000		C,H,K,M,V	G, J	A, B	DAL
M8340102^4323%&	432,000		C,H,K,M,V	B, D, F	A, B	DAL
M8340102^4373%&	437,000	See PN Ordering Section	C,H,K,M,V	B, D	A, B	DAL
M8340102^4423%&	442,000		C,H,K,M,V	B, D, F	A, B	DAL
M8340102^4483%&	448,000		C,H,K,M,V	B, D	A, B	DAL

M8340102^4533%&	453,000		C,H,K,M,V	B, D, F	A, B	DAL
M8340102^4593%&	459,000		C,H,K,M,V	B, D	A, B	DAL
M8340102^4643%&	464,000	See PN Ordering Section	C,H,K,M,V	B, D, F	A, B	DAL
M8340102^4703%&	470,000		C,H,K,M,V	B, D, G, J	A, B	DAL
M8340102^4753%&	475,000		C,H,K,M,V	B, D, F	A, B	DAL
M8340102^4813%&	481,000		C,H,K,M,V	B, D	A, B	DAL
M8340102^4873%&	487,000		C,H,K,M,V	B, D, F	A, B	DAL
	Resistance	Power	Char.	Res.		
Part Number	Value (Ohms)	Rating	(^)	Tolerance	Schematic	Manufacturer
M8340102^4933%&	493,000	See PN Ordering Section	C,H,K,M,V	B, D	A, B	DAL
M8340102^4993%&	499,000		C,H,K,M,V	B, D, F	A, B	DAL
M8340102^5053%&	505,000		C,H,K,M,V	B, D	A, B	DAL
M8340102^5103%&	510,000		C,H,K,M,V	G, J	A, B	DAL
M8340102^5113%&	511,000		C,H,K,M,V	B, D, F	A, B	DAL
M8340102^5173%&	517,000	See PN Ordering Section	C,H,K,M,V	B, D	A, B	DAL
M8340102^5233%&	523,000		C,H,K,M,V	B, D, F	A, B	DAL
M8340102^5303%&	530,000		C,H,K,M,V	B, D	A, B	DAL
M8340102^5363%&	536,000		C,H,K,M,V	B, D, F	A, B	DAL
M8340102^5423%&	542,000		C,H,K,M,V	B, D	A, B	DAL
M8340102^5493%&	549,000	See PN Ordering Section	C,H,K,M,V	B, D, F	A, B	DAL
M8340102^5563%&	556,000		C,H,K,M,V	B, D	A, B	DAL
M8340102^5603%&	560,000		C,H,K,M,V	G, J	A, B	DAL
M8340102^5623%&	562,000		C,H,K,M,V	B, D, F	A, B	DAL
	Resistance	Power	Char.	Res.		
Part Number	Value (Ohms)	Rating	(^)	Tolerance	Schematic	Manufacturer
M8340102^5693%&	569,000		C,H,K,M,V	B, D	A, B	DAL
M8340102^5763%&	576,000	See PN Ordering Section	C,H,K,M,V	B, D, F	A, B	DAL
M8340102^5833%&	583,000		C,H,K,M,V	B, D	A, B	DAL
M8340102^5903%&	590,000		C,H,K,M,V	B, D, F	A, B	DAL
M8340102^5973%&	597,000		C,H,K,M,V	B, D	A, B	DAL
M8340102^6043%&	604,000		C,H,K,M,V	B, D, F	A, B	DAL
M8340102^6123%&	612,000	See PN Ordering Section	C,H,K,M,V	B, D	A, B	DAL
M8340102^6193%&	619,000		C,H,K,M,V	B, D, F	A, B	DAL
M8340102^6203%&	620,000		C,H,K,M,V	G, J	A, B	DAL
M8340102^6263%&	626,000		C,H,K,M,V	B, D	A, B	DAL
M8340102^6343%&	634,000		C,H,K,M,V	B, D, F	A, B	DAL
M8340102^6423%&	642,000	See PN Ordering Section	C,H,K,M,V	B, D	A, B	DAL
M8340102^6493%&	649,000		C,H,K,M,V	B, D, F	A, B	DAL
M8340102^6573%&	657,000		C,H,K,M,V	B, D	A, B	DAL
	Resistance	Power	Char.	Res.		
Part Number	Value (Ohms)	Rating	(^)	Tolerance	Schematic	Manufacturer
M8340102^6653%&	665,000		C,H,K,M,V	B, D, F	A, B	DAL
M8340102^6733%&	673,000		C,H,K,M,V	B, D	A, B	DAL
M8340102^6803%&	680,000	See PN Ordering Section	C,H,K,M,V	G, J	A, B	DAL
M8340102^6813%&	681,000		C,H,K,M,V	B, D, F	A, B	DAL
M8340102^6903%&	690,000		C,H,K,M,V	B, D	A, B	DAL
M8340102^6983%&	698,000		C,H,K,M,V	B, D, F	A, B	DAL

M8340102^7063%&	706,000		C,H,K,M,V	B, D	A, B	DAL
M8340102^7153%&	715,000	See PN Ordering Section	C,H,K,M,V	B, D, F	A, B	DAL
M8340102^7233%&	723,000		C,H,K,M,V	B, D	A, B	DAL
M8340102^7323%&	732,000		C,H,K,M,V	B, D, F	A, B	DAL
M8340102^7413%&	741,000		C,H,K,M,V	B, D	A, B	DAL
M8340102^7503%&	750,000		C,H,K,M,V	B, D, F, G, J	A, B	DAL
M8340102^7593%&	759,000	See PN Ordering Section	C,H,K,M,V	B, D	A, B	DAL
M8340102^7683%&	768,000		C,H,K,M,V	B, D, F	A, B	DAL
	Resistance	Power	Char.	Res.		
Part Number	Value (Ohms)	Rating	(^)	Tolerance	Schematic	Manufacturer
M8340102^7773%&	777,000		C,H,K,M,V	B, D	A, B	DAL
M8340102^7873%&	787,000		C,H,K,M,V	B, D, F	A, B	DAL
M8340102^7963%&	796,000		C,H,K,M,V	B, D	A, B	DAL
M8340102^8063%&	806,000	See PN Ordering Section	C,H,K,M,V	B, D, F	A, B	DAL
M8340102^8163%&	816,000		C,H,K,M,V	B, D	A, B	DAL
M8340102^8203%&	820,000		C,H,K,M,V	G, J	A, B	DAL
M8340102^8253%&	825,000		C,H,K,M,V	B, D, F	A, B	DAL
M8340102^8353%&	835,000		C,H,K,M,V	B, D	A, B	DAL
M8340102^8453%&	845,000	See PN Ordering Section	C,H,K,M,V	B, D, F	A, B	DAL
M8340102^8563%&	856,000		C,H,K,M,V	B, D	A, B	DAL
M8340102^8663%&	866,000		C,H,K,M,V	B, D, F	A, B	DAL
M8340102^8763%&	876,000		C,H,K,M,V	B, D	A, B	DAL
M8340102^8873%&	887,000		C,H,K,M,V	B, D, F	A, B	DAL
M8340102^8983%&	898,000	See PN Ordering Section	C,H,K,M,V	B, D	A, B	DAL
	Resistance	Power	Char.	Res.		
Part Number	Value (Ohms)	Rating	(^)	Tolerance	Schematic	Manufacturer
M8340102^9093%&	909,000		C,H,K,M,V	B, D, F	A, B	DAL
M8340102^9103%&	910,000		C,H,K,M,V	G, J	A, B	DAL
M8340102^9203%&	920,000		C,H,K,M,V	B, D	A, B	DAL
M8340102^9313%&	931,000		C,H,K,M,V	B, D, F	A, B	DAL
M8340102^9423%&	942,000	See PN Ordering Section	C,H,K,M,V	B, D	A, B	DAL
M8340102^9533%&	953,000		C,H,K,M,V	B, D, F	A, B	DAL
M8340102^9653%&	965,000		C,H,K,M,V	B, D	A, B	DAL
M8340102^9763%&	976,000		C,H,K,M,V	B, D, F	A, B	DAL
M8340102^9883%&	988,000		C,H,K,M,V	B, D	A, B	DAL
M8340102^1004%&	1,000,000	See PN Ordering Section	C,H,K,M,V	B, D, F, G, J	A, B	DAL
	Resistance	Power	Char.	Res.		
Part Number	Value (Ohms)	Rating	(^)	Tolerance	Schematic	Manufacturer

MIL-PRF-83401/3 (RZ030) Film Resistor Networks

10.0 Ohms Through 1,000,000 Ohms

	Resistance	Power	Char.	Res.		
Part Number	Value (Ohms)	Rating	(^)	Tolerance	Schematic	Manufacturer
M8340103^10R0%&	10.0	Link at Top	C,H,K,M,V	F, G, J	A, B	DAL

M8340103^10R2%&	10.2		C,H,K,M,V	F	A, B	DAL
M8340103^10R5%&	10.5		C,H,K,M,V	F	A, B	DAL
M8340103^10R7%&	10.7		C,H,K,M,V	F	A, B	DAL
M8340103^11R0%&	11.0		C,H,K,M,V	F, G, J	A, B	DAL
M8340103^11R3%&	11.3	Link at Top	C,H,K,M,V	F	A, B	DAL
M8340103^11R5%&	11.5		C,H,K,M,V	F	A, B	DAL
M8340103^11R8%&	11.8		C,H,K,M,V	F	A, B	DAL
M8340103^12R0%&	12.0		C,H,K,M,V	F, G, J	A, B	DAL
M8340103^12R1%&	12.1		C,H,K,M,V	F	A, B	DAL
M8340103^12R4%&	12.4	Link at Top	C,H,K,M,V	F	A, B	DAL
M8340103^12R7%&	12.7		C,H,K,M,V	F	A, B	DAL
M8340103^13R0%&	13.0		C,H,K,M,V	F, G, J	A, B	DAL
M8340103^13R3%&	13.3		C,H,K,M,V	F	A, B	DAL
M8340103^13R7%&	13.7		C,H,K,M,V	F	A, B	DAL
M8340103^14R0%&	14.0	Link at Top	C,H,K,M,V	F	A, B	DAL
M8340103^14R3%&	14.3		C,H,K,M,V	F	A, B	DAL
M8340103^14R7%&	14.7		C,H,K,M,V	F	A, B	DAL
M8340103^15R0%&	15.0		C,H,K,M,V	F, G, J	A, B	DAL
M8340103^15R4%&	15.4		C,H,K,M,V	F	A, B	DAL
M8340103^15R8%&	15.8	Link at Top	C,H,K,M,V	F	A, B	DAL
M8340103^16R0%&	16.0		C,H,K,M,V	G, J	A, B	DAL
M8340103^16R2%&	16.2		C,H,K,M,V	F	A, B	DAL
M8340103^16R5%&	16.5		C,H,K,M,V	F	A, B	DAL
M8340103^16R9%&	16.9		C,H,K,M,V	F	A, B	DAL
M8340103^17R4%&	17.4	Link at Top	C,H,K,M,V	F	A, B	DAL
M8340103^17R8%&	17.8		C,H,K,M,V	F	A, B	DAL
M8340103^18R0%&	18.0		C,H,K,M,V	G, J	A, B	DAL
M8340103^18R2%&	18.2		C,H,K,M,V	F	A, B	DAL
M8340103^18R7%&	18.7		C,H,K,M,V	F	A, B	DAL
M8340103^19R1%&	19.1	Link at Top	C,H,K,M,V	F	A, B	DAL
M8340103^19R6%&	19.6		C,H,K,M,V	F	A, B	DAL
M8340103^20R0%&	20.0		C,H,K,M,V	F, G, J	A, B	DAL
M8340103^20R5%&	20.5		C,H,K,M,V	F	A, B	DAL
M8340103^21R0%&	21.0		C,H,K,M,V	F	A, B	DAL
M8340103^21R5%&	21.5	Link at Top	C,H,K,M,V	F	A, B	DAL
M8340103^22R0%&	22.0		C,H,K,M,V	G, J	A, B	DAL
M8340103^22R1%&	22.1		C,H,K,M,V	F	A, B	DAL
M8340103^22R6%&	22.6		C,H,K,M,V	F	A, B	DAL
M8340103^23R2%&	23.2		C,H,K,M,V	F	A, B	DAL
M8340103^23R7%&	23.7	Link at Top	C,H,K,M,V	F	A, B	DAL
M8340103^24R0%&	24.0		C,H,K,M,V	F, G, J	A, B	DAL
M8340103^24R3%&	24.3		C,H,K,M,V	F	A, B	DAL
M8340103^24R9%&	24.9		C,H,K,M,V	F	A, B	DAL
M8340103^25R5%&	25.5		C,H,K,M,V	F	A, B	DAL
M8340103^26R1%&	26.1	Link at Top	C,H,K,M,V	F	A, B	DAL
M8340103^26R7%&	26.7		C,H,K,M,V	F	A, B	DAL
M8340103^27R0%&	27.0		C,H,K,M,V	G, J	A, B	DAL

M8340103^27R4%&	27.4		C,H,K,M,V	F	A, B	DAL
M8340103^28R0%&	28.0		C,H,K,M,V	F	A, B	DAL
M8340103^28R7%&	28.7	Link at Top	C,H,K,M,V	F	A, B	DAL
M8340103^29R4%&	29.4		C,H,K,M,V	F	A, B	DAL
M8340103^30R0%&	30.0		C,H,K,M,V	G, J	A, B	DAL
M8340103^30R1%&	30.1		C,H,K,M,V	F	A, B	DAL
M8340103^30R9%&	30.9		C,H,K,M,V	F	A, B	DAL
M8340103^31R6%&	31.6	Link at Top	C,H,K,M,V	F	A, B	DAL
M8340103^32R4%&	32.4		C,H,K,M,V	F	A, B	DAL
M8340103^33R0%&	33.0		C,H,K,M,V	G, J	A, B	DAL
M8340103^33R2%&	33.2		C,H,K,M,V	F	A, B	DAL
M8340103^34R0%&	34.0		C,H,K,M,V	F	A, B	DAL
M8340103^34R8%&	34.8	Link at Top	C,H,K,M,V	F	A, B	DAL
M8340103^35R7%&	35.7		C,H,K,M,V	F	A, B	DAL
M8340103^36R0%&	36.0		C,H,K,M,V	G, J	A, B	DAL
M8340103^36R5%&	36.5		C,H,K,M,V	F	A, B	DAL
M8340103^37R4%&	37.4		C,H,K,M,V	F	A, B	DAL
M8340103^38R3%&	38.3	Link at Top	C,H,K,M,V	F	A, B	DAL
M8340103^39R0%&	39.0		C,H,K,M,V	G, J	A, B	DAL
M8340103^39R2%&	39.2		C,H,K,M,V	F	A, B	DAL
M8340103^40R2%&	40.2		C,H,K,M,V	F	A, B	DAL
M8340103^41R2%&	41.2		C,H,K,M,V	F	A, B	DAL
M8340103^42R2%&	42.2	Link at Top	C,H,K,M,V	F	A, B	DAL
M8340103^43R0%&	43.0		C,H,K,M,V	G, J	A, B	DAL
M8340103^43R2%&	43.2		C,H,K,M,V	F	A, B	DAL
M8340103^44R2%&	44.2		C,H,K,M,V	F	A, B	DAL
M8340103^45R3%&	45.3		C,H,K,M,V	F	A, B	DAL
M8340103^46R4%&	46.4	Link at Top	C,H,K,M,V	F	A, B	DAL
M8340103^47R0%&	47.0		C,H,K,M,V	G, J	A, B	DAL
M8340103^47R5%&	47.5		C,H,K,M,V	F	A, B	DAL
M8340103^48R7%&	48.7		C,H,K,M,V	F	A, B	DAL
M8340103^49R9%&	49.9		C,H,K,M,V	F	A, B	DAL,IRC2
M8340103^51R0%&	51.0	Link at Top	C,H,K,M,V	G, J	A, B	DAL,IRC2
M8340103^51R1%&	51.1		C,H,K,M,V	F	A, B	DAL,IRC2
M8340103^52R3%&	52.3		C,H,K,M,V	F	A, B	DAL,IRC2
M8340103^53R6%&	53.6		C,H,K,M,V	F	A, B	DAL,IRC2
M8340103^54R9%&	54.9		C,H,K,M,V	F	A, B	DAL,IRC2
M8340103^56R0%&	56.0	Link at Top	C,H,K,M,V	G, J	A, B	DAL,IRC2
M8340103^56R2%&	56.2		C,H,K,M,V	F	A, B	DAL,IRC2
M8340103^57R6%&	57.6		C,H,K,M,V	F	A, B	DAL,IRC2
M8340103^59R0%&	59.0		C,H,K,M,V	F	A, B	DAL,IRC2
M8340103^60R4%&	60.4		C,H,K,M,V	F	A, B	DAL,IRC2
M8340103^61R9%&	61.9	Link at Top	C,H,K,M,V	F	A, B	DAL,IRC2
M8340103^62R0%&	62.0		C,H,K,M,V	G, J	A, B	DAL,IRC2
M8340103^63R4%&	63.4		C,H,K,M,V	F	A, B	DAL,IRC2
M8340103^64R9%&	64.9		C,H,K,M,V	F	A, B	DAL,IRC2
M8340103^66R5%&	66.5		C,H,K,M,V	F	A, B	DAL,IRC2

M8340103^68R0%&	68.0	Link at Top	C,H,K,M,V	G, J	A, B	DAL,IRC2
M8340103^68R1%&	68.1		C,H,K,M,V	F	A, B	DAL,IRC2
M8340103^69R8%&	69.8		C,H,K,M,V	F	A, B	DAL,IRC2
M8340103^71R5%&	71.5		C,H,K,M,V	F	A, B	DAL,IRC2
M8340103^73R2%&	73.2		C,H,K,M,V	F	A, B	DAL,IRC2
M8340103^75R0%&	75.0	Link at Top	C,H,K,M,V	F, G, J	A, B	DAL,IRC2
M8340103^76R8%&	76.8		C,H,K,M,V	F	A, B	DAL,IRC2
M8340103^78R7%&	78.7		C,H,K,M,V	F	A, B	DAL,IRC2
M8340103^80R6%&	80.6		C,H,K,M,V	F	A, B	DAL,IRC2
M8340103^82R0%&	82.0		C,H,K,M,V	G, J	A, B	DAL,IRC2
M8340103^82R5%&	82.5	Link at Top	C,H,K,M,V	F	A, B	DAL,IRC2
M8340103^84R5%&	84.5		C,H,K,M,V	F	A, B	DAL,IRC2
M8340103^86R6%&	86.6		C,H,K,M,V	F	A, B	DAL,IRC2
M8340103^88R7%&	88.7		C,H,K,M,V	F	A, B	DAL,IRC2
M8340103^90R9%&	90.9		C,H,K,M,V	F	A, B	DAL,IRC2
M8340103^91R0%&	91.0	Link at Top	C,H,K,M,V	G, J	A, B	DAL,IRC2
M8340103^93R1%&	93.1		C,H,K,M,V	F	A, B	DAL,IRC2
M8340103^95R3%&	95.3		C,H,K,M,V	F	A, B	DAL,IRC2
M8340103^97R6%&	97.6		C,H,K,M,V	F	A, B	DAL,IRC2
M8340103^1000%&	100		C,H,K,M,V	B, D, F, G, J	A, B	DAL,IRC2
M8340103^1010%&	101	Link at Top	C,H,K,M,V	B, D	A, B	DAL,IRC2
M8340103^1020%&	102		C,H,K,M,V	B, D, F	A, B	DAL,IRC2
M8340103^1040%&	104		C,H,K,M,V	B, D	A, B	DAL,IRC2
M8340103^1050%&	105		C,H,K,M,V	B, D, F	A, B	DAL,IRC2
M8340103^1060%&	106		C,H,K,M,V	B, D	A, B	DAL,IRC2
M8340103^1070%&	107	Link at Top	C,H,K,M,V	B, D, F	A, B	DAL,IRC2
M8340103^1090%&	109		C,H,K,M,V	B, D	A, B	DAL,IRC2
M8340103^1100%&	110		C,H,K,M,V	B, D, F, G, J	A, B	DAL,IRC2
M8340103^1110%&	111		C,H,K,M,V	B, D	A, B	DAL,IRC2
M8340103^1130%&	113		C,H,K,M,V	B, D, F	A, B	DAL,IRC2
M8340103^1140%&	114	Link at Top	C,H,K,M,V	B, D	A, B	DAL,IRC2
M8340103^1150%&	115		C,H,K,M,V	B, D, F	A, B	DAL,IRC2
M8340103^1170%&	117		C,H,K,M,V	B, D	A, B	DAL,IRC2
M8340103^1180%&	118		C,H,K,M,V	B, D, F	A, B	DAL,IRC2
M8340103^1200%&	120		C,H,K,M,V	B, D, F, G, J	A, B	DAL,IRC2
M8340103^1210%&	121	Link at Top	C,H,K,M,V	B, D, F	A, B	DAL,IRC2
M8340103^1230%&	123		C,H,K,M,V	B, D	A, B	DAL,IRC2
M8340103^1240%&	124		C,H,K,M,V	B, D, F	A, B	DAL,IRC2
M8340103^1260%&	126		C,H,K,M,V	B, D	A, B	DAL,IRC2
M8340103^1270%&	127		C,H,K,M,V	B, D, F	A, B	DAL,IRC2
M8340103^1290%&	129	Link at Top	C,H,K,M,V	B, D	A, B	DAL,IRC2
M8340103^1300%&	130		C,H,K,M,V	B, D, F, G, J	A, B	DAL,IRC2
M8340103^1320%&	132		C,H,K,M,V	B, D	A, B	DAL,IRC2
M8340103^1330%&	133		C,H,K,M,V	B, D, F	A, B	DAL,IRC2
M8340103^1350%&	135	Link at Top	C,H,K,M,V	B, D	A, B	DAL,IRC2
M8340103^1370%&	137		C,H,K,M,V	B, D, F	A, B	DAL,IRC2
M8340103^1380%&	138		C,H,K,M,V	B, D	A, B	DAL,IRC2

M8340103^1400%&	140		C,H,K,M,V	B, D, F	A, B	DAL,IRC2
M8340103^1420%&	142		C,H,K,M,V	B, D	A, B	DAL,IRC2
M8340103^1430%&	143	Link at Top	C,H,K,M,V	B, D, F	A, B	DAL,IRC2
M8340103^1450%&	145		C,H,K,M,V	B, D	A, B	DAL,IRC2
M8340103^1470%&	147		C,H,K,M,V	B, D, F	A, B	DAL,IRC2
M8340103^1490%&	149		C,H,K,M,V	B, D	A, B	DAL,IRC2
M8340103^1500%&	150		C,H,K,M,V	B, D, F, G, J	A, B	DAL,IRC2
M8340103^1520%&	152	Link at Top	C,H,K,M,V	B, D	A, B	DAL,IRC2
M8340103^1540%&	154		C,H,K,M,V	B, D, F	A, B	DAL,IRC2
M8340103^1560%&	156		C,H,K,M,V	B, D	A, B	DAL,IRC2
M8340103^1580%&	158		C,H,K,M,V	B, D, F	A, B	DAL,IRC2
M8340103^1600%&	160		C,H,K,M,V	B, D, G, J	A, B	DAL,IRC2
M8340103^1620%&	162	Link at Top	C,H,K,M,V	B, D, F	A, B	DAL,IRC2
M8340103^1640%&	164		C,H,K,M,V	B, D	A, B	DAL,IRC2
M8340103^1650%&	165		C,H,K,M,V	B, D, F	A, B	DAL,IRC2
M8340103^1670%&	167		C,H,K,M,V	B, D	A, B	DAL,IRC2
M8340103^1690%&	169		C,H,K,M,V	B, D, F	A, B	DAL,IRC2
M8340103^1720%&	172	Link at Top	C,H,K,M,V	B, D	A, B	DAL,IRC2
M8340103^1740%&	174		C,H,K,M,V	B, D, F	A, B	DAL,IRC2
M8340103^1760%&	176		C,H,K,M,V	B, D	A, B	DAL,IRC2
M8340103^1780%&	178		C,H,K,M,V	B, D, F	A, B	DAL,IRC2
M8340103^1800%&	180		C,H,K,M,V	B, D, G, J	A, B	DAL,IRC2
M8340103^1820%&	182	Link at Top	C,H,K,M,V	B, D, F	A, B	DAL,IRC2
M8340103^1840%&	184		C,H,K,M,V	B, D	A, B	DAL,IRC2
M8340103^1870%&	187		C,H,K,M,V	B, D, F	A, B	DAL,IRC2
M8340103^1890%&	189		C,H,K,M,V	B, D	A, B	DAL,IRC2
M8340103^1910%&	191		C,H,K,M,V	B, D, F	A, B	DAL,IRC2
M8340103^1930%&	193	Link at Top	C,H,K,M,V	B, D	A, B	DAL,IRC2
M8340103^1960%&	196		C,H,K,M,V	B, D, F	A, B	DAL,IRC2
M8340103^1980%&	198		C,H,K,M,V	B, D	A, B	DAL,IRC2
M8340103^2000%&	200		C,H,K,M,V	B, D, F, G, J	A, B	DAL,IRC2
M8340103^2030%&	203		C,H,K,M,V	B, D	A, B	DAL,IRC2
M8340103^2050%&	205	Link at Top	C,H,K,M,V	B, D, F	A, B	DAL,IRC2
M8340103^2080%&	208		C,H,K,M,V	B, D	A, B	DAL,IRC2
M8340103^2100%&	210		C,H,K,M,V	B, D, F	A, B	DAL,IRC2
M8340103^2130%&	213		C,H,K,M,V	B, D	A, B	DAL,IRC2
M8340103^2150%&	215		C,H,K,M,V	B, D, F	A, B	DAL,IRC2
M8340103^2180%&	218	Link at Top	C,H,K,M,V	B, D	A, B	DAL,IRC2
M8340103^2200%&	220		C,H,K,M,V	G, J	A, B	DAL,IRC2
M8340103^2210%&	221		C,H,K,M,V	B, D, F	A, B	DAL,IRC2
M8340103^2230%&	223		C,H,K,M,V	B, D	A, B	DAL,IRC2
M8340103^2260%&	226		C,H,K,M,V	B, D, F	A, B	DAL,IRC2
M8340103^2290%&	229	Link at Top	C,H,K,M,V	B, D	A, B	DAL,IRC2
M8340103^2320%&	232		C,H,K,M,V	B, D, F	A, B	DAL,IRC2
M8340103^2340%&	234		C,H,K,M,V	B, D	A, B	DAL,IRC2
M8340103^2370%&	237		C,H,K,M,V	B, D, F	A, B	DAL,IRC2
M8340103^2400%&	240		C,H,K,M,V	B, D, F, G, J	A, B	DAL,IRC2

M8340103^2430%&	243	Link at Top	C,H,K,M,V	B, D, F	A, B	DAL,IRC2
M8340103^2460%&	246		C,H,K,M,V	B, D	A, B	DAL,IRC2
M8340103^2490%&	249		C,H,K,M,V	B, D, F	A, B	DAL,IRC2
M8340103^2520%&	252		C,H,K,M,V	B, D	A, B	DAL,IRC2
M8340103^2550%&	255		C,H,K,M,V	B, D, F	A, B	DAL,IRC2
M8340103^2580%&	258	Link at Top	C,H,K,M,V	B, D	A, B	DAL,IRC2
M8340103^2610%&	261		C,H,K,M,V	B, D, F	A, B	DAL,IRC2
M8340103^2640%&	264		C,H,K,M,V	B, D	A, B	DAL,IRC2
M8340103^2670%&	267		C,H,K,M,V	B, D, F	A, B	DAL,IRC2
M8340103^2700%&	270		C,H,K,M,V	G, J	A, B	DAL,IRC2
M8340103^2710%&	271	Link at Top	C,H,K,M,V	B, D	A, B	DAL,IRC2
M8340103^2740%&	274		C,H,K,M,V	B, D, F	A, B	DAL,IRC2
M8340103^2770%&	277		C,H,K,M,V	B, D	A, B	DAL,IRC2
M8340103^2800%&	280		C,H,K,M,V	B, D, F	A, B	DAL,IRC2
M8340103^2840%&	284		C,H,K,M,V	B, D	A, B	DAL,IRC2
M8340103^2870%&	287	Link at Top	C,H,K,M,V	B, D, F	A, B	DAL,IRC2
M8340103^2910%&	291		C,H,K,M,V	B, D	A, B	DAL,IRC2
M8340103^2940%&	294		C,H,K,M,V	B, D, F	A, B	DAL,IRC2
M8340103^2980%&	298		C,H,K,M,V	B, D	A, B	DAL,IRC2
M8340103^3000%&	300		C,H,K,M,V	G, J	A, B	DAL,IRC2
M8340103^3010%&	301	Link at Top	C,H,K,M,V	B, D, F	A, B	DAL,IRC2
M8340103^3050%&	305		C,H,K,M,V	B, D	A, B	DAL,IRC2
M8340103^3090%&	309		C,H,K,M,V	B, D, F	A, B	DAL,IRC2
M8340103^3120%&	312		C,H,K,M,V	B, D	A, B	DAL,IRC2
M8340103^3160%&	316		C,H,K,M,V	B, D, F	A, B	DAL,IRC2
M8340103^3200%&	320	Link at Top	C,H,K,M,V	B, D	A, B	DAL,IRC2
M8340103^3240%&	324		C,H,K,M,V	B, D, F	A, B	DAL,IRC2
M8340103^3280%&	328		C,H,K,M,V	B, D	A, B	DAL,IRC2
M8340103^3300%&	330		C,H,K,M,V	G, J	A, B	DAL,IRC2
M8340103^3320%&	332		C,H,K,M,V	B, D, F	A, B	DAL,IRC2
M8340103^3360%&	336	Link at Top	C,H,K,M,V	B, D	A, B	DAL,IRC2
M8340103^3400%&	340		C,H,K,M,V	B, D, F	A, B	DAL,IRC2
M8340103^3440%&	344		C,H,K,M,V	B, D	A, B	DAL,IRC2
M8340103^3480%&	348		C,H,K,M,V	B, D, F	A, B	DAL,IRC2
M8340103^3520%&	352		C,H,K,M,V	B, D	A, B	DAL,IRC2
M8340103^3570%&	357	Link at Top	C,H,K,M,V	B, D, F	A, B	DAL,IRC2
M8340103^3600%&	360		C,H,K,M,V	G, J	A, B	DAL,IRC2
M8340103^3610%&	361		C,H,K,M,V	B, D	A, B	DAL,IRC2
M8340103^3650%&	365		C,H,K,M,V	B, D, F	A, B	DAL,IRC2
M8340103^3700%&	370		C,H,K,M,V	B, D	A, B	DAL,IRC2
M8340103^3740%&	374	Link at Top	C,H,K,M,V	B, D, F	A, B	DAL,IRC2
M8340103^3790%&	379		C,H,K,M,V	B, D	A, B	DAL,IRC2
M8340103^3830%&	383		C,H,K,M,V	B, D, F	A, B	DAL,IRC2
M8340103^3880%&	388		C,H,K,M,V	B, D	A, B	DAL,IRC2
M8340103^3900%&	390		C,H,K,M,V	G, J	A, B	DAL,IRC2
M8340103^3920%&	392	Link at Top	C,H,K,M,V	B, D, F	A, B	DAL,IRC2
M8340103^3970%&	397		C,H,K,M,V	B, D	A, B	DAL,IRC2

M8340103^4020%&	402		C,H,K,M,V	B, D, F	A, B	DAL,IRC2
M8340103^4070%&	407		C,H,K,M,V	B, D	A, B	DAL,IRC2
M8340103^4120%&	412		C,H,K,M,V	B, D, F	A, B	DAL,IRC2
M8340103^4170%&	417	Link at Top	C,H,K,M,V	B, D	A, B	DAL,IRC2
M8340103^4220%&	422		C,H,K,M,V	B, D, F	A, B	DAL,IRC2
M8340103^4270%&	427		C,H,K,M,V	B, D	A, B	DAL,IRC2
M8340103^4300%&	430		C,H,K,M,V	G, J	A, B	DAL,IRC2
M8340103^4320%&	432		C,H,K,M,V	B, D, F	A, B	DAL,IRC2
M8340103^4370%&	437	Link at Top	C,H,K,M,V	B, D	A, B	DAL,IRC2
M8340103^4420%&	442		C,H,K,M,V	B, D, F	A, B	DAL,IRC2
M8340103^4480%&	448		C,H,K,M,V	B, D	A, B	DAL,IRC2
M8340103^4530%&	453		C,H,K,M,V	B, D, F	A, B	DAL,IRC2
M8340103^4590%&	459		C,H,K,M,V	B, D	A, B	DAL,IRC2
M8340103^4640%&	464	Link at Top	C,H,K,M,V	B, D, F	A, B	DAL,IRC2
M8340103^4700%&	470		C,H,K,M,V	B, D, G, J	A, B	DAL,IRC2
M8340103^4750%&	475		C,H,K,M,V	B, D, F	A, B	DAL,IRC2
M8340103^4810%&	481		C,H,K,M,V	B, D	A, B	DAL,IRC2
M8340103^4870%&	487		C,H,K,M,V	B, D, F	A, B	DAL,IRC2
M8340103^4930%&	493	Link at Top	C,H,K,M,V	B, D	A, B	DAL,IRC2
M8340103^4990%&	499		C,H,K,M,V	B, D, F	A, B	DAL,IRC2
M8340103^5050%&	505		C,H,K,M,V	B, D	A, B	DAL,IRC2
M8340103^5100%&	510		C,H,K,M,V	G, J	A, B	DAL,IRC2
M8340103^5110%&	511		C,H,K,M,V	B, D, F	A, B	DAL,IRC2
M8340103^5170%&	517	Link at Top	C,H,K,M,V	B, D	A, B	DAL,IRC2
M8340103^5230%&	523		C,H,K,M,V	B, D, F	A, B	DAL,IRC2
M8340103^5300%&	530		C,H,K,M,V	B, D	A, B	DAL,IRC2
M8340103^5360%&	536		C,H,K,M,V	B, D, F	A, B	DAL,IRC2
M8340103^5420%&	542		C,H,K,M,V	B, D	A, B	DAL,IRC2
M8340103^5490%&	549	Link at Top	C,H,K,M,V	B, D, F	A, B	DAL,IRC2
M8340103^5560%&	556		C,H,K,M,V	B, D	A, B	DAL,IRC2
M8340103^5600%&	560		C,H,K,M,V	G, J	A, B	DAL,IRC2
M8340103^5620%&	562		C,H,K,M,V	B, D, F	A, B	DAL,IRC2
M8340103^5690%&	569		C,H,K,M,V	B, D	A, B	DAL,IRC2
M8340103^5760%&	576	Link at Top	C,H,K,M,V	B, D, F	A, B	DAL,IRC2
M8340103^5830%&	583		C,H,K,M,V	B, D	A, B	DAL,IRC2
M8340103^5900%&	590		C,H,K,M,V	B, D, F	A, B	DAL,IRC2
M8340103^5970%&	597		C,H,K,M,V	B, D	A, B	DAL,IRC2
M8340103^6040%&	604		C,H,K,M,V	B, D, F	A, B	DAL,IRC2
M8340103^6120%&	612	Link at Top	C,H,K,M,V	B, D	A, B	DAL,IRC2
M8340103^6190%&	619		C,H,K,M,V	B, D, F	A, B	DAL,IRC2
M8340103^6200%&	620		C,H,K,M,V	G, J	A, B	DAL,IRC2
M8340103^6260%&	626		C,H,K,M,V	B, D	A, B	DAL,IRC2
M8340103^6340%&	634		C,H,K,M,V	B, D, F	A, B	DAL,IRC2
M8340103^6420%&	642	Link at Top	C,H,K,M,V	B, D	A, B	DAL,IRC2
M8340103^6490%&	649		C,H,K,M,V	B, D, F	A, B	DAL,IRC2
M8340103^6570%&	657		C,H,K,M,V	B, D	A, B	DAL,IRC2
M8340103^6650%&	665		C,H,K,M,V	B, D, F	A, B	DAL,IRC2

M8340103^6730%&	673		C,H,K,M,V	B, D	A, B	DAL,IRC2
M8340103^6800%&	680	Link at Top	C,H,K,M,V	G, J	A, B	DAL,IRC2
M8340103^6810%&	681		C,H,K,M,V	B, D, F	A, B	DAL,IRC2
M8340103^6900%&	690		C,H,K,M,V	B, D	A, B	DAL,IRC2
M8340103^6980%&	698		C,H,K,M,V	B, D, F	A, B	DAL,IRC2
M8340103^7060%&	706		C,H,K,M,V	B, D	A, B	DAL,IRC2
M8340103^7150%&	715	Link at Top	C,H,K,M,V	B, D, F	A, B	DAL,IRC2
M8340103^7230%&	723		C,H,K,M,V	B, D	A, B	DAL,IRC2
M8340103^7320%&	732		C,H,K,M,V	B, D, F	A, B	DAL,IRC2
M8340103^7410%&	741		C,H,K,M,V	B, D	A, B	DAL,IRC2
M8340103^7500%&	750		C,H,K,M,V	B, D, F, G, J	A, B	DAL,IRC2
M8340103^7590%&	759	Link at Top	C,H,K,M,V	B, D	A, B	DAL,IRC2
M8340103^7680%&	768		C,H,K,M,V	B, D, F	A, B	DAL,IRC2
M8340103^7770%&	777		C,H,K,M,V	B, D	A, B	DAL,IRC2
M8340103^7870%&	787		C,H,K,M,V	B, D, F	A, B	DAL,IRC2
M8340103^7960%&	796		C,H,K,M,V	B, D	A, B	DAL,IRC2
M8340103^8060%&	806	Link at Top	C,H,K,M,V	B, D, F	A, B	DAL,IRC2
M8340103^8160%&	816		C,H,K,M,V	B, D	A, B	DAL,IRC2
M8340103^8200%&	820		C,H,K,M,V	G, J	A, B	DAL,IRC2
M8340103^8250%&	825		C,H,K,M,V	B, D, F	A, B	DAL,IRC2
M8340103^8350%&	835		C,H,K,M,V	B, D	A, B	DAL,IRC2
M8340103^8450%&	845	Link at Top	C,H,K,M,V	B, D, F	A, B	DAL,IRC2
M8340103^8560%&	856		C,H,K,M,V	B, D	A, B	DAL,IRC2
M8340103^8660%&	866		C,H,K,M,V	B, D, F	A, B	DAL,IRC2
M8340103^8760%&	876		C,H,K,M,V	B, D	A, B	DAL,IRC2
M8340103^8870%&	887		C,H,K,M,V	B, D, F	A, B	DAL,IRC2
M8340103^8980%&	898	Link at Top	C,H,K,M,V	B, D	A, B	DAL,IRC2
M8340103^9090%&	909		C,H,K,M,V	B, D, F	A, B	DAL,IRC2
M8340103^9100%&	910		C,H,K,M,V	G, J	A, B	DAL,IRC2
M8340103^9200%&	920		C,H,K,M,V	B, D	A, B	DAL,IRC2
M8340103^9310%&	931		C,H,K,M,V	B, D, F	A, B	DAL,IRC2
M8340103^9420%&	942	Link at Top	C,H,K,M,V	B, D	A, B	DAL,IRC2
M8340103^9530%&	953		C,H,K,M,V	B, D, F	A, B	DAL,IRC2
M8340103^9650%&	965		C,H,K,M,V	B, D	A, B	DAL,IRC2
M8340103^9760%&	976		C,H,K,M,V	B, D, F	A, B	DAL,IRC2
M8340103^9880%&	988		C,H,K,M,V	B, D	A, B	DAL,IRC2
M8340103^1001%&	1,000	Link at Top	C,H,K,M,V	B, D, F, G, J	A, B	DAL,IRC2
M8340103^1011%&	1,010		C,H,K,M,V	B, D	A, B	DAL,IRC2
M8340103^1021%&	1,020		C,H,K,M,V	B, D, F	A, B	DAL,IRC2
M8340103^1041%&	1,040		C,H,K,M,V	B, D	A, B	DAL,IRC2
M8340103^1051%&	1,050		C,H,K,M,V	B, D, F	A, B	DAL,IRC2
M8340103^1061%&	1,060	Link at Top	C,H,K,M,V	B, D	A, B	DAL,IRC2
M8340103^1071%&	1,070		C,H,K,M,V	B, D, F	A, B	DAL,IRC2
M8340103^1091%&	1,090		C,H,K,M,V	B, D	A, B	DAL,IRC2
M8340103^1101%&	1,100		C,H,K,M,V	B, D, F, G, J	A, B	DAL,IRC2
M8340103^1111%&	1,110		C,H,K,M,V	B, D	A, B	DAL,IRC2
M8340103^1131%&	1,130	Link at Top	C,H,K,M,V	B, D, F	A, B	DAL,IRC2

M8340103^1141%&	1,140		C,H,K,M,V	B, D	A, B	DAL,IRC2
M8340103^1151%&	1,150		C,H,K,M,V	B, D, F	A, B	DAL,IRC2
M8340103^1171%&	1,170		C,H,K,M,V	B, D	A, B	DAL,IRC2
M8340103^1181%&	1,180		C,H,K,M,V	B, D, F	A, B	DAL,IRC2
M8340103^1201%&	1,200	Link at Top	C,H,K,M,V	B, D, F, G, J	A, B	DAL,IRC2
M8340103^1211%&	1,210		C,H,K,M,V	B, D, F	A, B	DAL,IRC2
M8340103^1231%&	1,230		C,H,K,M,V	B, D	A, B	DAL,IRC2
M8340103^1241%&	1,240		C,H,K,M,V	B, D, F	A, B	DAL,IRC2
M8340103^1261%&	1,260		C,H,K,M,V	B, D	A, B	DAL,IRC2
M8340103^1271%&	1,270	Link at Top	C,H,K,M,V	B, D, F	A, B	DAL,IRC2
M8340103^1291%&	1,290		C,H,K,M,V	B, D	A, B	DAL,IRC2
M8340103^1301%&	1,300		C,H,K,M,V	B, D, F, G, J	A, B	DAL,IRC2
M8340103^1321%&	1,320		C,H,K,M,V	B, D	A, B	DAL,IRC2
M8340103^1331%&	1,330		C,H,K,M,V	B, D, F	A, B	DAL,IRC2
M8340103^1351%&	1,350	Link at Top	C,H,K,M,V	B, D	A, B	DAL,IRC2
M8340103^1371%&	1,370		C,H,K,M,V	B, D, F	A, B	DAL,IRC2
M8340103^1381%&	1,380		C,H,K,M,V	B, D	A, B	DAL,IRC2
M8340103^1401%&	1,400		C,H,K,M,V	B, D, F	A, B	DAL,IRC2
M8340103^1421%&	1,420		C,H,K,M,V	B, D	A, B	DAL,IRC2
M8340103^1431%&	1,430	Link at Top	C,H,K,M,V	B, D, F	A, B	DAL,IRC2
M8340103^1451%&	1,450		C,H,K,M,V	B, D	A, B	DAL,IRC2
M8340103^1471%&	1,470		C,H,K,M,V	B, D, F	A, B	DAL,IRC2
M8340103^1491%&	1,490		C,H,K,M,V	B, D	A, B	DAL,IRC2
M8340103^1501%&	1,500		C,H,K,M,V	B, D, F, G, J	A, B	DAL,IRC2
M8340103^1521%&	1,520	Link at Top	C,H,K,M,V	B, D	A, B	DAL,IRC2
M8340103^1541%&	1,540		C,H,K,M,V	B, D, F	A, B	DAL,IRC2
M8340103^1561%&	1,560		C,H,K,M,V	B, D	A, B	DAL,IRC2
M8340103^1581%&	1,580		C,H,K,M,V	B, D, F	A, B	DAL,IRC2
M8340103^1601%&	1,600		C,H,K,M,V	B, D, G, J	A, B	DAL,IRC2
M8340103^1621%&	1,620	Link at Top	C,H,K,M,V	B, D, F	A, B	DAL,IRC2
M8340103^1641%&	1,640		C,H,K,M,V	B, D	A, B	DAL,IRC2
M8340103^1651%&	1,650		C,H,K,M,V	B, D, F	A, B	DAL,IRC2
M8340103^1671%&	1,670		C,H,K,M,V	B, D	A, B	DAL,IRC2
M8340103^1691%&	1,690		C,H,K,M,V	B, D, F	A, B	DAL,IRC2
M8340103^1721%&	1,720	Link at Top	C,H,K,M,V	B, D	A, B	DAL,IRC2
M8340103^1741%&	1,740		C,H,K,M,V	B, D, F	A, B	DAL,IRC2
M8340103^1761%&	1,760		C,H,K,M,V	B, D	A, B	DAL,IRC2
M8340103^1781%&	1,780		C,H,K,M,V	B, D, F	A, B	DAL,IRC2
M8340103^1801%&	1,800		C,H,K,M,V	B, D, G, J	A, B	DAL,IRC2
M8340103^1821%&	1,820	Link at Top	C,H,K,M,V	B, D, F	A, B	DAL,IRC2
M8340103^1841%&	1,840		C,H,K,M,V	B, D	A, B	DAL,IRC2
M8340103^1871%&	1,870		C,H,K,M,V	B, D, F	A, B	DAL,IRC2
M8340103^1891%&	1,890		C,H,K,M,V	B, D	A, B	DAL,IRC2
M8340103^1911%&	1,910		C,H,K,M,V	B, D, F	A, B	DAL,IRC2
M8340103^1931%&	1,930	Link at Top	C,H,K,M,V	B, D	A, B	DAL,IRC2
M8340103^1961%&	1,960		C,H,K,M,V	B, D, F	A, B	DAL,IRC2
M8340103^1981%&	1,980		C,H,K,M,V	B, D	A, B	DAL,IRC2

M8340103^2001%&	2,000		C,H,K,M,V	B, D, F, G, J	A, B	DAL,IRC2
M8340103^2031%&	2,030		C,H,K,M,V	B, D	A, B	DAL,IRC2
M8340103^2051%&	2,050	Link at Top	C,H,K,M,V	B, D, F	A, B	DAL,IRC2
M8340103^2081%&	2,080		C,H,K,M,V	B, D	A, B	DAL,IRC2
M8340103^2101%&	2,100		C,H,K,M,V	B, D, F	A, B	DAL,IRC2
M8340103^2131%&	2,130		C,H,K,M,V	B, D	A, B	DAL,IRC2
M8340103^2151%&	2,150		C,H,K,M,V	B, D, F	A, B	DAL,IRC2
M8340103^2181%&	2,180	Link at Top	C,H,K,M,V	B, D	A, B	DAL,IRC2
M8340103^2201%&	2,200		C,H,K,M,V	G, J	A, B	DAL,IRC2
M8340103^2211%&	2,210		C,H,K,M,V	B, D, F	A, B	DAL,IRC2
M8340103^2231%&	2,230		C,H,K,M,V	B, D	A, B	DAL,IRC2
M8340103^2261%&	2,260		C,H,K,M,V	B, D, F	A, B	DAL,IRC2
M8340103^2291%&	2,290	Link at Top	C,H,K,M,V	B, D	A, B	DAL,IRC2
M8340103^2321%&	2,320		C,H,K,M,V	B, D, F	A, B	DAL,IRC2
M8340103^2341%&	2,340		C,H,K,M,V	B, D	A, B	DAL,IRC2
M8340103^2371%&	2,370		C,H,K,M,V	B, D, F	A, B	DAL,IRC2
M8340103^2401%&	2,400		C,H,K,M,V	B, D, F, G, J	A, B	DAL,IRC2
M8340103^2431%&	2,430	Link at Top	C,H,K,M,V	B, D, F	A, B	DAL,IRC2
M8340103^2461%&	2,460		C,H,K,M,V	B, D	A, B	DAL,IRC2
M8340103^2491%&	2,490		C,H,K,M,V	B, D, F	A, B	DAL,IRC2
M8340103^2521%&	2,520		C,H,K,M,V	B, D	A, B	DAL,IRC2
M8340103^2551%&	2,550		C,H,K,M,V	B, D, F	A, B	DAL,IRC2
M8340103^2581%&	2,580	Link at Top	C,H,K,M,V	B, D	A, B	DAL,IRC2
M8340103^2611%&	2,610		C,H,K,M,V	B, D, F	A, B	DAL,IRC2
M8340103^2641%&	2,640		C,H,K,M,V	B, D	A, B	DAL,IRC2
M8340103^2671%&	2,670		C,H,K,M,V	B, D, F	A, B	DAL,IRC2
M8340103^2701%&	2,700		C,H,K,M,V	G, J	A, B	DAL,IRC2
M8340103^2711%&	2,710	Link at Top	C,H,K,M,V	B, D	A, B	DAL,IRC2
M8340103^2741%&	2,740		C,H,K,M,V	B, D, F	A, B	DAL,IRC2
M8340103^2771%&	2,770		C,H,K,M,V	B, D	A, B	DAL,IRC2
M8340103^2801%&	2,800		C,H,K,M,V	B, D, F	A, B	DAL,IRC2
M8340103^2841%&	2,840		C,H,K,M,V	B, D	A, B	DAL,IRC2
M8340103^2871%&	2,870	Link at Top	C,H,K,M,V	B, D, F	A, B	DAL,IRC2
M8340103^2911%&	2,910		C,H,K,M,V	B, D	A, B	DAL,IRC2
M8340103^2941%&	2,940		C,H,K,M,V	B, D, F	A, B	DAL,IRC2
M8340103^2981%&	2,980		C,H,K,M,V	B, D	A, B	DAL,IRC2
M8340103^3001%&	3,000		C,H,K,M,V	G, J	A, B	DAL,IRC2
M8340103^3011%&	3,010	Link at Top	C,H,K,M,V	B, D, F	A, B	DAL,IRC2
M8340103^3051%&	3,050		C,H,K,M,V	B, D	A, B	DAL,IRC2
M8340103^3091%&	3,090		C,H,K,M,V	B, D, F	A, B	DAL,IRC2
M8340103^3121%&	3,120		C,H,K,M,V	B, D	A, B	DAL,IRC2
M8340103^3161%&	3,160		C,H,K,M,V	B, D, F	A, B	DAL,IRC2
M8340103^3201%&	3,200	Link at Top	C,H,K,M,V	B, D	A, B	DAL,IRC2
M8340103^3241%&	3,240		C,H,K,M,V	B, D, F	A, B	DAL,IRC2
M8340103^3281%&	3,280		C,H,K,M,V	B, D	A, B	DAL,IRC2
M8340103^3301%&	3,300		C,H,K,M,V	G, J	A, B	DAL,IRC2
M8340103^3321%&	3,320		C,H,K,M,V	B, D, F	A, B	DAL,IRC2

M8340103^3361%&	3,360	Link at Top	C,H,K,M,V	B, D	A, B	DAL,IRC2
M8340103^3401%&	3,400		C,H,K,M,V	B, D, F	A, B	DAL,IRC2
M8340103^3441%&	3,440		C,H,K,M,V	B, D	A, B	DAL,IRC2
M8340103^3481%&	3,480		C,H,K,M,V	B, D, F	A, B	DAL,IRC2
M8340103^3521%&	3,520		C,H,K,M,V	B, D	A, B	DAL,IRC2
M8340103^3571%&	3,570	Link at Top	C,H,K,M,V	B, D, F	A, B	DAL,IRC2
M8340103^3601%&	3,600		C,H,K,M,V	G, J	A, B	DAL,IRC2
M8340103^3611%&	3,610		C,H,K,M,V	B, D	A, B	DAL,IRC2
M8340103^3651%&	3,650		C,H,K,M,V	B, D, F	A, B	DAL,IRC2
M8340103^3701%&	3,700		C,H,K,M,V	B, D	A, B	DAL,IRC2
M8340103^3741%&	3,740	Link at Top	C,H,K,M,V	B, D, F	A, B	DAL,IRC2
M8340103^3791%&	3,790		C,H,K,M,V	B, D	A, B	DAL,IRC2
M8340103^3831%&	3,830		C,H,K,M,V	B, D, F	A, B	DAL,IRC2
M8340103^3881%&	3,880		C,H,K,M,V	B, D	A, B	DAL,IRC2
M8340103^3901%&	3,900		C,H,K,M,V	G, J	A, B	DAL,IRC2
M8340103^3921%&	3,920	Link at Top	C,H,K,M,V	B, D, F	A, B	DAL,IRC2
M8340103^3971%&	3,970		C,H,K,M,V	B, D	A, B	DAL,IRC2
M8340103^4021%&	4,020		C,H,K,M,V	B, D, F	A, B	DAL,IRC2
M8340103^4071%&	4,070		C,H,K,M,V	B, D	A, B	DAL,IRC2
M8340103^4121%&	4,120		C,H,K,M,V	B, D, F	A, B	DAL,IRC2
M8340103^4171%&	4,170	Link at Top	C,H,K,M,V	B, D	A, B	DAL,IRC2
M8340103^4221%&	4,220		C,H,K,M,V	B, D, F	A, B	DAL,IRC2
M8340103^4271%&	4,270		C,H,K,M,V	B, D	A, B	DAL,IRC2
M8340103^4301%&	4,300		C,H,K,M,V	G, J	A, B	DAL,IRC2
M8340103^4321%&	4,320		C,H,K,M,V	B, D, F	A, B	DAL,IRC2
M8340103^4371%&	4,370	Link at Top	C,H,K,M,V	B, D	A, B	DAL,IRC2
M8340103^4421%&	4,420		C,H,K,M,V	B, D, F	A, B	DAL,IRC2
M8340103^4481%&	4,480		C,H,K,M,V	B, D	A, B	DAL,IRC2
M8340103^4531%&	4,530		C,H,K,M,V	B, D, F	A, B	DAL,IRC2
M8340103^4591%&	4,590		C,H,K,M,V	B, D	A, B	DAL,IRC2
M8340103^4641%&	4,640	Link at Top	C,H,K,M,V	B, D, F	A, B	DAL,IRC2
M8340103^4701%&	4,700		C,H,K,M,V	B, D, G, J	A, B	DAL,IRC2
M8340103^4751%&	4,750		C,H,K,M,V	B, D, F	A, B	DAL,IRC2
M8340103^4811%&	4,810		C,H,K,M,V	B, D	A, B	DAL,IRC2
M8340103^4871%&	4,870		C,H,K,M,V	B, D, F	A, B	DAL,IRC2
M8340103^4931%&	4,930	Link at Top	C,H,K,M,V	B, D	A, B	DAL,IRC2
M8340103^4991%&	4,990		C,H,K,M,V	B, D, F	A, B	DAL,IRC2
M8340103^5051%&	5,050		C,H,K,M,V	B, D	A, B	DAL,IRC2
M8340103^5101%&	5,100		C,H,K,M,V	G, J	A, B	DAL,IRC2
M8340103^5111%&	5,110		C,H,K,M,V	B, D, F	A, B	DAL,IRC2
M8340103^5171%&	5,170	Link at Top	C,H,K,M,V	B, D	A, B	DAL,IRC2
M8340103^5231%&	5,230		C,H,K,M,V	B, D, F	A, B	DAL,IRC2
M8340103^5301%&	5,300		C,H,K,M,V	B, D	A, B	DAL,IRC2
M8340103^5361%&	5,360		C,H,K,M,V	B, D, F	A, B	DAL,IRC2
M8340103^5421%&	5,420		C,H,K,M,V	B, D	A, B	DAL,IRC2
M8340103^5491%&	5,490	Link at Top	C,H,K,M,V	B, D, F	A, B	DAL,IRC2
M8340103^5561%&	5,560		C,H,K,M,V	B, D	A, B	DAL,IRC2

M8340103^5601%&	5,600		C,H,K,M,V	G, J	A, B	DAL,IRC2
M8340103^5621%&	5,620		C,H,K,M,V	B, D, F	A, B	DAL,IRC2
M8340103^5691%&	5,690		C,H,K,M,V	B, D	A, B	DAL,IRC2
M8340103^5761%&	5,760	Link at Top	C,H,K,M,V	B, D, F	A, B	DAL,IRC2
M8340103^5831%&	5,830		C,H,K,M,V	B, D	A, B	DAL,IRC2
M8340103^5901%&	5,900		C,H,K,M,V	B, D, F	A, B	DAL,IRC2
M8340103^5971%&	5,970		C,H,K,M,V	B, D	A, B	DAL,IRC2
M8340103^6041%&	6,040		C,H,K,M,V	B, D, F	A, B	DAL,IRC2
M8340103^6121%&	6,120	Link at Top	C,H,K,M,V	B, D	A, B	DAL,IRC2
M8340103^6191%&	6,190		C,H,K,M,V	B, D, F	A, B	DAL,IRC2
M8340103^6201%&	6,200		C,H,K,M,V	G, J	A, B	DAL,IRC2
M8340103^6261%&	6,260		C,H,K,M,V	B, D	A, B	DAL,IRC2
M8340103^6341%&	6,340		C,H,K,M,V	B, D, F	A, B	DAL,IRC2
M8340103^6421%&	6,420	Link at Top	C,H,K,M,V	B, D	A, B	DAL,IRC2
M8340103^6491%&	6,490		C,H,K,M,V	B, D, F	A, B	DAL,IRC2
M8340103^6571%&	6,570		C,H,K,M,V	B, D	A, B	DAL,IRC2
M8340103^6651%&	6,650		C,H,K,M,V	B, D, F	A, B	DAL,IRC2
M8340103^6731%&	6,730		C,H,K,M,V	B, D	A, B	DAL,IRC2
M8340103^6801%&	6,800	Link at Top	C,H,K,M,V	G, J	A, B	DAL,IRC2
M8340103^6811%&	6,810		C,H,K,M,V	B, D, F	A, B	DAL,IRC2
M8340103^6901%&	6,900		C,H,K,M,V	B, D	A, B	DAL,IRC2
M8340103^6981%&	6,980		C,H,K,M,V	B, D, F	A, B	DAL,IRC2
M8340103^7061%&	7,060		C,H,K,M,V	B, D	A, B	DAL,IRC2
M8340103^7151%&	7,150	Link at Top	C,H,K,M,V	B, D, F	A, B	DAL,IRC2
M8340103^7231%&	7,230		C,H,K,M,V	B, D	A, B	DAL,IRC2
M8340103^7321%&	7,320		C,H,K,M,V	B, D, F	A, B	DAL,IRC2
M8340103^7411%&	7,410		C,H,K,M,V	B, D	A, B	DAL,IRC2
M8340103^7501%&	7,500		C,H,K,M,V	B, D, F, G, J	A, B	DAL,IRC2
M8340103^7591%&	7,590	Link at Top	C,H,K,M,V	B, D	A, B	DAL,IRC2
M8340103^7681%&	7,680		C,H,K,M,V	B, D, F	A, B	DAL,IRC2
M8340103^7771%&	7,770		C,H,K,M,V	B, D	A, B	DAL,IRC2
M8340103^7871%&	7,870		C,H,K,M,V	B, D, F	A, B	DAL,IRC2
M8340103^7961%&	7,960		C,H,K,M,V	B, D	A, B	DAL,IRC2
M8340103^8061%&	8,060	Link at Top	C,H,K,M,V	B, D, F	A, B	DAL,IRC2
M8340103^8161%&	8,160		C,H,K,M,V	B, D	A, B	DAL,IRC2
M8340103^8201%&	8,200		C,H,K,M,V	G, J	A, B	DAL,IRC2
M8340103^8251%&	8,250		C,H,K,M,V	B, D, F	A, B	DAL,IRC2
M8340103^8351%&	8,350		C,H,K,M,V	B, D	A, B	DAL,IRC2
M8340103^8451%&	8,450	Link at Top	C,H,K,M,V	B, D, F	A, B	DAL,IRC2
M8340103^8561%&	8,560		C,H,K,M,V	B, D	A, B	DAL,IRC2
M8340103^8661%&	8,660		C,H,K,M,V	B, D, F	A, B	DAL,IRC2
M8340103^8761%&	8,760		C,H,K,M,V	B, D	A, B	DAL,IRC2
M8340103^8871%&	8,870		C,H,K,M,V	B, D, F	A, B	DAL,IRC2
M8340103^8981%&	8,980	Link at Top	C,H,K,M,V	B, D	A, B	DAL,IRC2
M8340103^9091%&	9,090		C,H,K,M,V	B, D, F	A, B	DAL,IRC2
M8340103^9101%&	9,100		C,H,K,M,V	G, J	A, B	DAL,IRC2
M8340103^9201%&	9,200		C,H,K,M,V	B, D	A, B	DAL,IRC2

M8340103^9311%&	9,310		C,H,K,M,V	B, D, F	A, B	DAL,IRC2
M8340103^9421%&	9,420	Link at Top	C,H,K,M,V	B, D	A, B	DAL,IRC2
M8340103^9531%&	9,530		C,H,K,M,V	B, D, F	A, B	DAL,IRC2
M8340103^9651%&	9,650		C,H,K,M,V	B, D	A, B	DAL,IRC2
M8340103^9761%&	9,760		C,H,K,M,V	B, D, F	A, B	DAL,IRC2
M8340103^9881%&	9,880		C,H,K,M,V	B, D	A, B	DAL,IRC2
M8340103^1002%&	10,000	Link at Top	C,H,K,M,V	B, D, F, G, J	A, B	DAL,IRC2
M8340103^1012%&	10,100		C,H,K,M,V	B, D	A, B	DAL,IRC2
M8340103^1022%&	10,200		C,H,K,M,V	B, D, F	A, B	DAL,IRC2
M8340103^1042%&	10,400		C,H,K,M,V	B, D	A, B	DAL,IRC2
M8340103^1052%&	10,500		C,H,K,M,V	B, D, F	A, B	DAL,IRC2
M8340103^1062%&	10,600	Link at Top	C,H,K,M,V	B, D	A, B	DAL,IRC2
M8340103^1072%&	10,700		C,H,K,M,V	B, D, F	A, B	DAL,IRC2
M8340103^1092%&	10,900		C,H,K,M,V	B, D	A, B	DAL,IRC2
M8340103^1102%&	11,000		C,H,K,M,V	B, D, F, G, J	A, B	DAL,IRC2
M8340103^1112%&	11,100		C,H,K,M,V	B, D	A, B	DAL,IRC2
M8340103^1132%&	11,300	Link at Top	C,H,K,M,V	B, D, F	A, B	DAL,IRC2
M8340103^1142%&	11,400		C,H,K,M,V	B, D	A, B	DAL,IRC2
M8340103^1152%&	11,500		C,H,K,M,V	B, D, F	A, B	DAL,IRC2
M8340103^1172%&	11,700		C,H,K,M,V	B, D	A, B	DAL,IRC2
M8340103^1182%&	11,800		C,H,K,M,V	B, D, F	A, B	DAL,IRC2
M8340103^1202%&	12,000	Link at Top	C,H,K,M,V	B, D, F, G, J	A, B	DAL,IRC2
M8340103^1212%&	12,100		C,H,K,M,V	B, D, F	A, B	DAL,IRC2
M8340103^1232%&	12,300		C,H,K,M,V	B, D	A, B	DAL,IRC2
M8340103^1242%&	12,400		C,H,K,M,V	B, D, F	A, B	DAL,IRC2
M8340103^1262%&	12,600		C,H,K,M,V	B, D	A, B	DAL,IRC2
M8340103^1272%&	12,700	Link at Top	C,H,K,M,V	B, D, F	A, B	DAL,IRC2
M8340103^1292%&	12,900		C,H,K,M,V	B, D	A, B	DAL,IRC2
M8340103^1302%&	13,000		C,H,K,M,V	B, D, F, G, J	A, B	DAL,IRC2
M8340103^1322%&	13,200		C,H,K,M,V	B, D	A, B	DAL,IRC2
M8340103^1332%&	13,300		C,H,K,M,V	B, D, F	A, B	DAL,IRC2
M8340103^1352%&	13,500	Link at Top	C,H,K,M,V	B, D	A, B	DAL,IRC2
M8340103^1372%&	13,700		C,H,K,M,V	B, D, F	A, B	DAL,IRC2
M8340103^1382%&	13,800		C,H,K,M,V	B, D	A, B	DAL,IRC2
M8340103^1402%&	14,000		C,H,K,M,V	B, D, F	A, B	DAL,IRC2
M8340103^1422%&	14,200		C,H,K,M,V	B, D	A, B	DAL,IRC2
M8340103^1432%&	14,300	Link at Top	C,H,K,M,V	B, D, F	A, B	DAL,IRC2
M8340103^1452%&	14,500		C,H,K,M,V	B, D	A, B	DAL,IRC2
M8340103^1472%&	14,700		C,H,K,M,V	B, D, F	A, B	DAL,IRC2
M8340103^1492%&	14,900		C,H,K,M,V	B, D	A, B	DAL,IRC2
M8340103^1502%&	15,000		C,H,K,M,V	B, D, F, G, J	A, B	DAL,IRC2
M8340103^1522%&	15,200	Link at Top	C,H,K,M,V	B, D	A, B	DAL,IRC2
M8340103^1542%&	15,400		C,H,K,M,V	B, D, F	A, B	DAL,IRC2
M8340103^1562%&	15,600		C,H,K,M,V	B, D	A, B	DAL,IRC2
M8340103^1582%&	15,800		C,H,K,M,V	B, D, F	A, B	DAL,IRC2
M8340103^1602%&	16,000		C,H,K,M,V	B, D, G, J	A, B	DAL,IRC2
M8340103^1622%&	16,200	Link at Top	C,H,K,M,V	B, D, F	A, B	DAL,IRC2

M8340103^1642%&	16,400		C,H,K,M,V	B, D	A, B	DAL,IRC2
M8340103^1652%&	16,500		C,H,K,M,V	B, D, F	A, B	DAL,IRC2
M8340103^1672%&	16,700		C,H,K,M,V	B, D	A, B	DAL,IRC2
M8340103^1692%&	16,900		C,H,K,M,V	B, D, F	A, B	DAL,IRC2
M8340103^1722%&	17,200	Link at Top	C,H,K,M,V	B, D	A, B	DAL,IRC2
M8340103^1742%&	17,400		C,H,K,M,V	B, D, F	A, B	DAL,IRC2
M8340103^1762%&	17,600		C,H,K,M,V	B, D	A, B	DAL,IRC2
M8340103^1782%&	17,800		C,H,K,M,V	B, D, F	A, B	DAL,IRC2
M8340103^1802%&	18,000		C,H,K,M,V	B, D, G, J	A, B	DAL,IRC2
M8340103^1822%&	18,200	Link at Top	C,H,K,M,V	B, D, F	A, B	DAL,IRC2
M8340103^1842%&	18,400		C,H,K,M,V	B, D	A, B	DAL,IRC2
M8340103^1872%&	18,700		C,H,K,M,V	B, D, F	A, B	DAL,IRC2
M8340103^1892%&	18,900		C,H,K,M,V	B, D	A, B	DAL,IRC2
M8340103^1912%&	19,100		C,H,K,M,V	B, D, F	A, B	DAL,IRC2
M8340103^1932%&	19,300	Link at Top	C,H,K,M,V	B, D	A, B	DAL,IRC2
M8340103^1962%&	19,600		C,H,K,M,V	B, D, F	A, B	DAL,IRC2
M8340103^1982%&	19,800		C,H,K,M,V	B, D	A, B	DAL,IRC2
M8340103^2002%&	20,000		C,H,K,M,V	B, D, F, G, J	A, B	DAL,IRC2
M8340103^2032%&	20,300		C,H,K,M,V	B, D	A, B	DAL,IRC2
M8340103^2052%&	20,500	Link at Top	C,H,K,M,V	B, D, F	A, B	DAL,IRC2
M8340103^2082%&	20,800		C,H,K,M,V	B, D	A, B	DAL,IRC2
M8340103^2102%&	21,000		C,H,K,M,V	B, D, F	A, B	DAL,IRC2
M8340103^2132%&	21,300		C,H,K,M,V	B, D	A, B	DAL,IRC2
M8340103^2152%&	21,500		C,H,K,M,V	B, D, F	A, B	DAL,IRC2
M8340103^2182%&	21,800	Link at Top	C,H,K,M,V	B, D	A, B	DAL,IRC2
M8340103^2202%&	22,000		C,H,K,M,V	G, J	A, B	DAL,IRC2
M8340103^2212%&	22,100		C,H,K,M,V	B, D, F	A, B	DAL,IRC2
M8340103^2232%&	22,300		C,H,K,M,V	B, D	A, B	DAL,IRC2
M8340103^2262%&	22,600		C,H,K,M,V	B, D, F	A, B	DAL,IRC2
M8340103^2292%&	22,900	Link at Top	C,H,K,M,V	B, D	A, B	DAL,IRC2
M8340103^2322%&	23,200		C,H,K,M,V	B, D, F	A, B	DAL,IRC2
M8340103^2342%&	23,400		C,H,K,M,V	B, D	A, B	DAL,IRC2
M8340103^2372%&	23,700		C,H,K,M,V	B, D, F	A, B	DAL,IRC2
M8340103^2402%&	24,000		C,H,K,M,V	B, D, F, G, J	A, B	DAL,IRC2
M8340103^2432%&	24,300	Link at Top	C,H,K,M,V	B, D, F	A, B	DAL,IRC2
M8340103^2462%&	24,600		C,H,K,M,V	B, D	A, B	DAL,IRC2
M8340103^2492%&	24,900		C,H,K,M,V	B, D, F	A, B	DAL,IRC2
M8340103^2522%&	25,200		C,H,K,M,V	B, D	A, B	DAL,IRC2
M8340103^2552%&	25,500		C,H,K,M,V	B, D, F	A, B	DAL,IRC2
M8340103^2582%&	25,800	Link at Top	C,H,K,M,V	B, D	A, B	DAL,IRC2
M8340103^2612%&	26,100		C,H,K,M,V	B, D, F	A, B	DAL,IRC2
M8340103^2642%&	26,400		C,H,K,M,V	B, D	A, B	DAL,IRC2
M8340103^2672%&	26,700		C,H,K,M,V	B, D, F	A, B	DAL,IRC2
M8340103^2702%&	27,000		C,H,K,M,V	G, J	A, B	DAL,IRC2
M8340103^2712%&	27,100	Link at Top	C,H,K,M,V	B, D	A, B	DAL,IRC2
M8340103^2742%&	27,400		C,H,K,M,V	B, D, F	A, B	DAL,IRC2
M8340103^2772%&	27,700		C,H,K,M,V	B, D	A, B	DAL,IRC2

M8340103^2802%&	28,000		C,H,K,M,V	B, D, F	A, B	DAL,IRC2
M8340103^2842%&	28,400		C,H,K,M,V	B, D	A, B	DAL,IRC2
M8340103^2872%&	28,700	Link at Top	C,H,K,M,V	B, D, F	A, B	DAL,IRC2
M8340103^2912%&	29,100		C,H,K,M,V	B, D	A, B	DAL,IRC2
M8340103^2942%&	29,400		C,H,K,M,V	B, D, F	A, B	DAL,IRC2
M8340103^2982%&	29,800		C,H,K,M,V	B, D	A, B	DAL,IRC2
M8340103^3002%&	30,000		C,H,K,M,V	G, J	A, B	DAL,IRC2
M8340103^3012%&	30,100	Link at Top	C,H,K,M,V	B, D, F	A, B	DAL,IRC2
M8340103^3052%&	30,500		C,H,K,M,V	B, D	A, B	DAL,IRC2
M8340103^3092%&	30,900		C,H,K,M,V	B, D, F	A, B	DAL,IRC2
M8340103^3122%&	31,200		C,H,K,M,V	B, D	A, B	DAL,IRC2
M8340103^3162%&	31,600		C,H,K,M,V	B, D, F	A, B	DAL,IRC2
M8340103^3202%&	32,000	Link at Top	C,H,K,M,V	B, D	A, B	DAL,IRC2
M8340103^3242%&	32,400		C,H,K,M,V	B, D, F	A, B	DAL,IRC2
M8340103^3282%&	32,800		C,H,K,M,V	B, D	A, B	DAL,IRC2
M8340103^3302%&	33,000		C,H,K,M,V	G, J	A, B	DAL,IRC2
M8340103^3322%&	33,200		C,H,K,M,V	B, D, F	A, B	DAL,IRC2
M8340103^3362%&	33,600	Link at Top	C,H,K,M,V	B, D	A, B	DAL,IRC2
M8340103^3402%&	34,000		C,H,K,M,V	B, D, F	A, B	DAL,IRC2
M8340103^3442%&	34,400		C,H,K,M,V	B, D	A, B	DAL,IRC2
M8340103^3482%&	34,800		C,H,K,M,V	B, D, F	A, B	DAL,IRC2
M8340103^3522%&	35,200		C,H,K,M,V	B, D	A, B	DAL,IRC2
M8340103^3572%&	35,700	Link at Top	C,H,K,M,V	B, D, F	A, B	DAL,IRC2
M8340103^3602%&	36,000		C,H,K,M,V	G, J	A, B	DAL,IRC2
M8340103^3612%&	36,100		C,H,K,M,V	B, D	A, B	DAL,IRC2
M8340103^3652%&	36,500		C,H,K,M,V	B, D, F	A, B	DAL,IRC2
M8340103^3702%&	37,000		C,H,K,M,V	B, D	A, B	DAL,IRC2
M8340103^3742%&	37,400	Link at Top	C,H,K,M,V	B, D, F	A, B	DAL,IRC2
M8340103^3792%&	37,900		C,H,K,M,V	B, D	A, B	DAL,IRC2
M8340103^3832%&	38,300		C,H,K,M,V	B, D, F	A, B	DAL,IRC2
M8340103^3882%&	38,800		C,H,K,M,V	B, D	A, B	DAL,IRC2
M8340103^3902%&	39,000		C,H,K,M,V	G, J	A, B	DAL,IRC2
M8340103^3922%&	39,200	Link at Top	C,H,K,M,V	B, D, F	A, B	DAL,IRC2
M8340103^3972%&	39,700		C,H,K,M,V	B, D	A, B	DAL,IRC2
M8340103^4022%&	40,200		C,H,K,M,V	B, D, F	A, B	DAL,IRC2
M8340103^4072%&	40,700		C,H,K,M,V	B, D	A, B	DAL,IRC2
M8340103^4122%&	41,200		C,H,K,M,V	B, D, F	A, B	DAL,IRC2
M8340103^4172%&	41,700	Link at Top	C,H,K,M,V	B, D	A, B	DAL,IRC2
M8340103^4222%&	42,200		C,H,K,M,V	B, D, F	A, B	DAL,IRC2
M8340103^4272%&	42,700		C,H,K,M,V	B, D	A, B	DAL,IRC2
M8340103^4302%&	43,000		C,H,K,M,V	G, J	A, B	DAL,IRC2
M8340103^4322%&	43,200		C,H,K,M,V	B, D, F	A, B	DAL,IRC2
M8340103^4372%&	43,700	Link at Top	C,H,K,M,V	B, D	A, B	DAL,IRC2
M8340103^4422%&	44,200		C,H,K,M,V	B, D, F	A, B	DAL,IRC2
M8340103^4482%&	44,800		C,H,K,M,V	B, D	A, B	DAL,IRC2
M8340103^4532%&	45,300		C,H,K,M,V	B, D, F	A, B	DAL,IRC2
M8340103^4592%&	45,900		C,H,K,M,V	B, D	A, B	DAL,IRC2

M8340103^4642%&	46,400	Link at Top	C,H,K,M,V	B, D, F	A, B	DAL,IRC2
M8340103^4702%&	47,000		C,H,K,M,V	B, D, G, J	A, B	DAL,IRC2
M8340103^4752%&	47,500		C,H,K,M,V	B, D, F	A, B	DAL,IRC2
M8340103^4812%&	48,100		C,H,K,M,V	B, D	A, B	DAL,IRC2
M8340103^4872%&	48,700		C,H,K,M,V	B, D, F	A, B	DAL,IRC2
M8340103^4932%&	49,300	Link at Top	C,H,K,M,V	B, D	A, B	DAL,IRC2
M8340103^4992%&	49,900		C,H,K,M,V	B, D, F	A, B	DAL,IRC2
M8340103^5052%&	50,500		C,H,K,M,V	B, D	A, B	DAL,IRC2
M8340103^5102%&	51,000		C,H,K,M,V	G, J	A, B	DAL,IRC2
M8340103^5112%&	51,100		C,H,K,M,V	B, D, F	A, B	DAL,IRC2
M8340103^5172%&	51,700	Link at Top	C,H,K,M,V	B, D	A, B	DAL,IRC2
M8340103^5232%&	52,300		C,H,K,M,V	B, D, F	A, B	DAL,IRC2
M8340103^5302%&	53,000		C,H,K,M,V	B, D	A, B	DAL,IRC2
M8340103^5362%&	53,600		C,H,K,M,V	B, D, F	A, B	DAL,IRC2
M8340103^5422%&	54,200		C,H,K,M,V	B, D	A, B	DAL,IRC2
M8340103^5492%&	54,900	Link at Top	C,H,K,M,V	B, D, F	A, B	DAL,IRC2
M8340103^5562%&	55,600		C,H,K,M,V	B, D	A, B	DAL,IRC2
M8340103^5602%&	56,000		C,H,K,M,V	G, J	A, B	DAL,IRC2
M8340103^5622%&	56,200		C,H,K,M,V	B, D, F	A, B	DAL,IRC2
M8340103^5692%&	56,900		C,H,K,M,V	B, D	A, B	DAL,IRC2
M8340103^5762%&	57,600	Link at Top	C,H,K,M,V	B, D, F	A, B	DAL,IRC2
M8340103^5832%&	58,300		C,H,K,M,V	B, D	A, B	DAL,IRC2
M8340103^5902%&	59,000		C,H,K,M,V	B, D, F	A, B	DAL,IRC2
M8340103^5972%&	59,700		C,H,K,M,V	B, D	A, B	DAL,IRC2
M8340103^6042%&	60,400		C,H,K,M,V	B, D, F	A, B	DAL,IRC2
M8340103^6122%&	61,200	Link at Top	C,H,K,M,V	B, D	A, B	DAL,IRC2
M8340103^6192%&	61,900		C,H,K,M,V	B, D, F	A, B	DAL,IRC2
M8340103^6202%&	62,000		C,H,K,M,V	G, J	A, B	DAL,IRC2
M8340103^6262%&	62,600		C,H,K,M,V	B, D	A, B	DAL,IRC2
M8340103^6342%&	63,400		C,H,K,M,V	B, D, F	A, B	DAL,IRC2
M8340103^6422%&	64,200	Link at Top	C,H,K,M,V	B, D	A, B	DAL,IRC2
M8340103^6492%&	64,900		C,H,K,M,V	B, D, F	A, B	DAL,IRC2
M8340103^6572%&	65,700		C,H,K,M,V	B, D	A, B	DAL,IRC2
M8340103^6652%&	66,500		C,H,K,M,V	B, D, F	A, B	DAL,IRC2
M8340103^6732%&	67,300		C,H,K,M,V	B, D	A, B	DAL,IRC2
M8340103^6802%&	68,000	Link at Top	C,H,K,M,V	G, J	A, B	DAL,IRC2
M8340103^6812%&	68,100		C,H,K,M,V	B, D, F	A, B	DAL,IRC2
M8340103^6902%&	69,000		C,H,K,M,V	B, D	A, B	DAL,IRC2
M8340103^6982%&	69,800		C,H,K,M,V	B, D, F	A, B	DAL,IRC2
M8340103^7062%&	70,600		C,H,K,M,V	B, D	A, B	DAL,IRC2
M8340103^7152%&	71,500	Link at Top	C,H,K,M,V	B, D, F	A, B	DAL,IRC2
M8340103^7232%&	72,300		C,H,K,M,V	B, D	A, B	DAL,IRC2
M8340103^7322%&	73,200		C,H,K,M,V	B, D, F	A, B	DAL,IRC2
M8340103^7412%&	74,100		C,H,K,M,V	B, D	A, B	DAL,IRC2
M8340103^7502%&	75,000		C,H,K,M,V	B, D, F, G, J	A, B	DAL,IRC2
M8340103^7592%&	75,900	Link at Top	C,H,K,M,V	B, D	A, B	DAL,IRC2
M8340103^7682%&	76,800		C,H,K,M,V	B, D, F	A, B	DAL,IRC2

M8340103^7772%&	77,700		C,H,K,M,V	B, D	A, B	DAL,IRC2
M8340103^7872%&	78,700		C,H,K,M,V	B, D, F	A, B	DAL,IRC2
M8340103^7962%&	79,600		C,H,K,M,V	B, D	A, B	DAL,IRC2
M8340103^8062%&	80,600	Link at Top	C,H,K,M,V	B, D, F	A, B	DAL,IRC2
M8340103^8162%&	81,600		C,H,K,M,V	B, D	A, B	DAL,IRC2
M8340103^8202%&	82,000		C,H,K,M,V	G, J	A, B	DAL,IRC2
M8340103^8252%&	82,500		C,H,K,M,V	B, D, F	A, B	DAL,IRC2
M8340103^8352%&	83,500		C,H,K,M,V	B, D	A, B	DAL,IRC2
M8340103^8452%&	84,500	Link at Top	C,H,K,M,V	B, D, F	A, B	DAL,IRC2
M8340103^8562%&	85,600		C,H,K,M,V	B, D	A, B	DAL,IRC2
M8340103^8662%&	86,600		C,H,K,M,V	B, D, F	A, B	DAL,IRC2
M8340103^8762%&	87,600		C,H,K,M,V	B, D	A, B	DAL,IRC2
M8340103^8872%&	88,700		C,H,K,M,V	B, D, F	A, B	DAL,IRC2
M8340103^8982%&	89,800	Link at Top	C,H,K,M,V	B, D	A, B	DAL,IRC2
M8340103^9092%&	90,900		C,H,K,M,V	B, D, F	A, B	DAL,IRC2
M8340103^9102%&	91,000		C,H,K,M,V	G, J	A, B	DAL,IRC2
M8340103^9202%&	92,000		C,H,K,M,V	B, D	A, B	DAL,IRC2
M8340103^9312%&	93,100		C,H,K,M,V	B, D, F	A, B	DAL,IRC2
M8340103^9422%&	94,200	Link at Top	C,H,K,M,V	B, D	A, B	DAL,IRC2
M8340103^9532%&	95,300		C,H,K,M,V	B, D, F	A, B	DAL,IRC2
M8340103^9652%&	96,500		C,H,K,M,V	B, D	A, B	DAL,IRC2
M8340103^9762%&	97,600		C,H,K,M,V	B, D, F	A, B	DAL,IRC2
M8340103^9882%&	98,800		C,H,K,M,V	B, D	A, B	DAL,IRC2
M8340103^1003%&	100,000	Link at Top	C,H,K,M,V	B, D, F, G, J	A, B	DAL,IRC2
M8340103^1023%&	102,000		C,H,K,M,V	F	A, B	DAL,IRC2
M8340103^1053%&	105,000		C,H,K,M,V	F	A, B	DAL,IRC2
M8340103^1073%&	107,000		C,H,K,M,V	F	A, B	DAL,IRC2
M8340103^1103%&	110,000		C,H,K,M,V	F, G, J	A, B	DAL,IRC2
M8340103^1133%&	113,000	Link at Top	C,H,K,M,V	F	A, B	DAL,IRC2
M8340103^1153%&	115,000		C,H,K,M,V	F	A, B	DAL,IRC2
M8340103^1183%&	118,000		C,H,K,M,V	F	A, B	DAL,IRC2
M8340103^1203%&	120,000	Link at Top	C,H,K,M,V	F, G, J	A, B	DAL,IRC2
M8340103^1213%&	121,000		C,H,K,M,V	F	A, B	DAL,IRC2
M8340103^1243%&	124,000		C,H,K,M,V	F	A, B	DAL
M8340103^1273%&	127,000	Link at Top	C,H,K,M,V	F	A, B	DAL
M8340103^1303%&	130,000		C,H,K,M,V	F, G, J	A, B	DAL
M8340103^1333%&	133,000		C,H,K,M,V	F	A, B	DAL
M8340103^1373%&	137,000		C,H,K,M,V	F	A, B	DAL
M8340103^1403%&	140,000		C,H,K,M,V	F	A, B	DAL
M8340103^1433%&	143,000	Link at Top	C,H,K,M,V	F	A, B	DAL
M8340103^1473%&	147,000		C,H,K,M,V	F	A, B	DAL
M8340103^1503%&	150,000		C,H,K,M,V	F, G, J	A, B	DAL
M8340103^1543%&	154,000		C,H,K,M,V	F	A, B	DAL
M8340103^1583%&	158,000		C,H,K,M,V	F	A, B	DAL
M8340103^1603%&	160,000		C,H,K,M,V	G, J	A, B	DAL
M8340103^1623%&	162,000	Link at Top	C,H,K,M,V	F	A, B	DAL
M8340103^1653%&	165,000		C,H,K,M,V	F	A, B	DAL

M8340103^1693%&	169,000		C,H,K,M,V	F	A, B	DAL
M8340103^1743%&	174,000		C,H,K,M,V	F	A, B	DAL
M8340103^1783%&	178,000		C,H,K,M,V	F	A, B	DAL
M8340103^1803%&	180,000		C,H,K,M,V	G, J	A, B	DAL
M8340103^1823%&	182,000	Link at Top	C,H,K,M,V	F	A, B	DAL
M8340103^1873%&	187,000		C,H,K,M,V	F	A, B	DAL
M8340103^1913%&	191,000		C,H,K,M,V	F	A, B	DAL
M8340103^1963%&	196,000		C,H,K,M,V	F	A, B	DAL
M8340103^2003%&	200,000		C,H,K,M,V	F, G, J	A, B	DAL
M8340103^2053%&	205,000	Link at Top	C,H,K,M,V	F	A, B	DAL
M8340103^2103%&	210,000		C,H,K,M,V	F	A, B	DAL
M8340103^2153%&	215,000		C,H,K,M,V	F	A, B	DAL
M8340103^2183%&	218,000	Link at Top	C,H,K,M,V		A, B	DAL
M8340103^2203%&	220,000		C,H,K,M,V	G, J	A, B	DAL
M8340103^2213%&	221,000		C,H,K,M,V	F	A, B	DAL
M8340103^2263%&	226,000		C,H,K,M,V	F	A, B	DAL
M8340103^2323%&	232,000		C,H,K,M,V	F	A, B	DAL
M8340103^2373%&	237,000		C,H,K,M,V	F	A, B	DAL
M8340103^2403%&	240,000		C,H,K,M,V	F, G, J	A, B	DAL
M8340103^2433%&	243,000	Link at Top	C,H,K,M,V	F	A, B	DAL
M8340103^2493%&	249,000		C,H,K,M,V	F	A, B	DAL
M8340103^2553%&	255,000		C,H,K,M,V	F	A, B	DAL
M8340103^2613%&	261,000		C,H,K,M,V	F	A, B	DAL
M8340103^2673%&	267,000		C,H,K,M,V	F	A, B	DAL
M8340103^2703%&	270,000		C,H,K,M,V	G, J	A, B	DAL
M8340103^2743%&	274,000		C,H,K,M,V	F	A, B	DAL
M8340103^2803%&	280,000		C,H,K,M,V	F	A, B	DAL
M8340103^2873%&	287,000	Link at Top	C,H,K,M,V	F	A, B	DAL
M8340103^2943%&	294,000		C,H,K,M,V	F	A, B	DAL
M8340103^3003%&	300,000		C,H,K,M,V	G, J	A, B	DAL
M8340103^3013%&	301,000	Link at Top	C,H,K,M,V	F	A, B	DAL
M8340103^3093%&	309,000		C,H,K,M,V	F	A, B	DAL
M8340103^3163%&	316,000		C,H,K,M,V	F	A, B	DAL
M8340103^3243%&	324,000		C,H,K,M,V	F	A, B	DAL
M8340103^3303%&	330,000		C,H,K,M,V	G, J	A, B	DAL
M8340103^3323%&	332,000		C,H,K,M,V	F	A, B	DAL
M8340103^3403%&	340,000		C,H,K,M,V	F	A, B	DAL
M8340103^3483%&	348,000		C,H,K,M,V	F	A, B	DAL
M8340103^3573%&	357,000	Link at Top	C,H,K,M,V	F	A, B	DAL
M8340103^3603%&	360,000		C,H,K,M,V	G, J	A, B	DAL
M8340103^3653%&	365,000		C,H,K,M,V	F	A, B	DAL
M8340103^3743%&	374,000	Link at Top	C,H,K,M,V	F	A, B	DAL
M8340103^3833%&	383,000		C,H,K,M,V	F	A, B	DAL
M8340103^3903%&	390,000		C,H,K,M,V	G, J	A, B	DAL
M8340103^3923%&	392,000	Link at Top	C,H,K,M,V	F	A, B	DAL
M8340103^4023%&	402,000		C,H,K,M,V	F	A, B	DAL
M8340103^4123%&	412,000		C,H,K,M,V	F	A, B	DAL

M8340103^4223%&	422,000		C,H,K,M,V	F	A, B	DAL
M8340103^4303%&	430,000		C,H,K,M,V	G, J	A, B	DAL
M8340103^4323%&	432,000		C,H,K,M,V	F	A, B	DAL
M8340103^4423%&	442,000		C,H,K,M,V	F	A, B	DAL
M8340103^4533%&	453,000		C,H,K,M,V	F	A, B	DAL
M8340103^4643%&	464,000	Link at Top	C,H,K,M,V	F	A, B	DAL
M8340103^4703%&	470,000		C,H,K,M,V	G, J	A, B	DAL
M8340103^4753%&	475,000		C,H,K,M,V	F	A, B	DAL
M8340103^4873%&	487,000		C,H,K,M,V	F	A, B	DAL
M8340103^4993%&	499,000		C,H,K,M,V	F	A, B	DAL
M8340103^5103%&	510,000		C,H,K,M,V	G, J	A, B	DAL
M8340103^5113%&	511,000		C,H,K,M,V	F	A, B	DAL
M8340103^5233%&	523,000		C,H,K,M,V	F	A, B	DAL
M8340103^5363%&	536,000		C,H,K,M,V	F	A, B	DAL
M8340103^5493%&	549,000	Link at Top	C,H,K,M,V	F	A, B	DAL
M8340103^5603%&	560,000		C,H,K,M,V	G, J	A, B	DAL
M8340103^5623%&	562,000		C,H,K,M,V	F	A, B	DAL
M8340103^5763%&	576,000	Link at Top	C,H,K,M,V	F	A, B	DAL
M8340103^5903%&	590,000		C,H,K,M,V	F	A, B	DAL
M8340103^6043%&	604,000		C,H,K,M,V	F	A, B	DAL
M8340103^6193%&	619,000		C,H,K,M,V	F	A, B	DAL
M8340103^6203%&	620,000		C,H,K,M,V	G, J	A, B	DAL
M8340103^6343%&	634,000		C,H,K,M,V	F	A, B	DAL
M8340103^6493%&	649,000		C,H,K,M,V	F	A, B	DAL
M8340103^6653%&	665,000		C,H,K,M,V	F	A, B	DAL
M8340103^6803%&	680,000	Link at Top	C,H,K,M,V	G, J	A, B	DAL
M8340103^6813%&	681,000		C,H,K,M,V	F	A, B	DAL
M8340103^6983%&	698,000		C,H,K,M,V	F	A, B	DAL
M8340103^7153%&	715,000	Link at Top	C,H,K,M,V	F	A, B	DAL
M8340103^7323%&	732,000		C,H,K,M,V	F	A, B	DAL
M8340103^7503%&	750,000		C,H,K,M,V	F, G, J	A, B	DAL
M8340103^7683%&	768,000		C,H,K,M,V	F	A, B	DAL
M8340103^7873%&	787,000		C,H,K,M,V	F	A, B	DAL
M8340103^8063%&	806,000	Link at Top	C,H,K,M,V	F	A, B	DAL
M8340103^8203%&	820,000		C,H,K,M,V	G, J	A, B	DAL
M8340103^8253%&	825,000		C,H,K,M,V	F	A, B	DAL
M8340103^8453%&	845,000	Link at Top	C,H,K,M,V	F	A, B	DAL
M8340103^8663%&	866,000		C,H,K,M,V	F	A, B	DAL
M8340103^8873%&	887,000		C,H,K,M,V	F	A, B	DAL
M8340103^9093%&	909,000		C,H,K,M,V	F	A, B	DAL
M8340103^9103%&	910,000		C,H,K,M,V	G, J	A, B	DAL
M8340103^9313%&	931,000		C,H,K,M,V	F	A, B	DAL
M8340103^9533%&	953,000		C,H,K,M,V	F	A, B	DAL
M8340103^9763%&	976,000		C,H,K,M,V	F	A, B	DAL
M8340103^1004%&	1,000,000	Link at Top	C,H,K,M,V	F, G, J	A, B	DAL

RZ030 RESISTORS

DECADE BREAKDOWN

Click on the link below to see the associated parts selection listing:

Resistance Range
10.0 Ohms through 97.6 Ohms
100 Ohms through 988 Ohms
1,000 Ohms through 9,880 Ohms
10,000 Ohms through 98,800 Ohms
100,000 Ohms through 1,000,000 Ohms

MIL-PRF-83401/3 (RZ030), RESISTOR NETWORKS

Fixed, Resistor Networks, Film

Schematic	Element Power Rating (W)	Network Power Rating (W)
A	0.05	0.35
B	0.025	0.325

Style RZ030

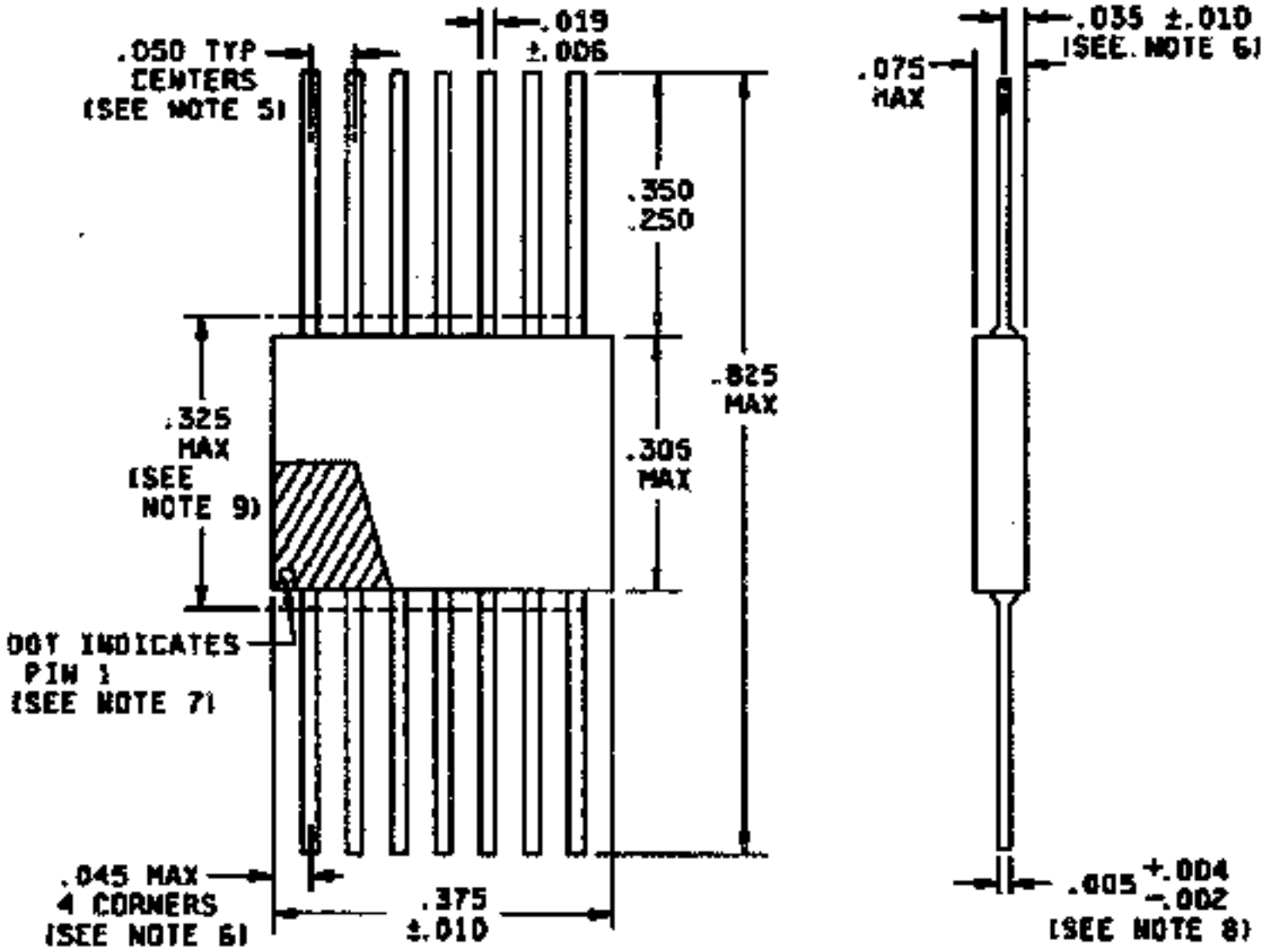
.050 TYP
CENTERS
(SEE NOTE 5)
.019
±.006
.350
.250
.825
MAX
.325
MAX
(SEE
NOTE 9)
.305
MAX
DOT INDICATES
PIN 1
(SEE NOTE 7)
.045 MAX
4 CORNERS
(SEE NOTE 6)
.375
±.010
.075
MAX
.035 ±.010
(SEE NOTE 6)
.005 +.004 -.002
(SEE NOTE 8)

Notes:

1) Dimensions are inches.

2) Metric equivalents are given for general information only.

3) Unless otherwise specified, tolerances are +/- 0.005 (0.13 mm).

4) The picturization of the styles above is given as representative of the envelope item. slight deviations from the outline shown, which are contained within the envelope and do not alter the functional aspects of the device, are acceptable.

5) Terminal centerline to centerline measurements made at point of emergence fo the lead from the body.

6) Measurements made at point of emergence of the lead of the body.

7) Pin 1 locator shall be a dot, notch, stripe, or numeral 1 adjacent to pin no. 1, in the shaded area.

8) This dimension included all platings and coatings.

9) This dimension allows for off-center lid, meniscus, and glass overrun.

MIL-PRF-83401/3 (RZ030) Film Resistor Networks: 10.0 Ohms Through 97.6 Ohms

	Resistance	Power	Char.	Res.		
Part Number	Value (Ohms)	Rating	(^)	Tolerance	Schematic	Manufacturer
M8340103^10R0%&	10.0	See PN Ordering Section	C,H,K,M,V	F, G, J	A, B	DAL
M8340103^10R2%&	10.2		C,H,K,M,V	F	A, B	DAL
M8340103^10R5%&	10.5		C,H,K,M,V	F	A, B	DAL
M8340103^10R7%&	10.7		C,H,K,M,V	F	A, B	DAL
M8340103^11R0%&	11.0		C,H,K,M,V	F, G, J	A, B	DAL
M8340103^11R3%&	11.3	See PN Ordering Section	C,H,K,M,V	F	A, B	DAL
M8340103^11R5%&	11.5		C,H,K,M,V	F	A, B	DAL
M8340103^11R8%&	11.8		C,H,K,M,V	F	A, B	DAL
M8340103^12R0%&	12.0		C,H,K,M,V	F, G, J	A, B	DAL
M8340103^12R1%&	12.1		C,H,K,M,V	F	A, B	DAL
M8340103^12R4%&	12.4	See PN Ordering Section	C,H,K,M,V	F	A, B	DAL
M8340103^12R7%&	12.7		C,H,K,M,V	F	A, B	DAL
M8340103^13R0%&	13.0		C,H,K,M,V	F, G, J	A, B	DAL
M8340103^13R3%&	13.3		C,H,K,M,V	F	A, B	DAL
	Resistance	Power	Char.	Res.		
Part Number	Value (Ohms)	Rating	(^)	Tolerance	Schematic	Manufacturer
M8340103^13R7%&	13.7		C,H,K,M,V	F	A, B	DAL
M8340103^14R0%&	14.0	See PN Ordering Section	C,H,K,M,V	F	A, B	DAL
M8340103^14R3%&	14.3		C,H,K,M,V	F	A, B	DAL
M8340103^14R7%&	14.7		C,H,K,M,V	F	A, B	DAL
M8340103^15R0%&	15.0		C,H,K,M,V	F, G, J	A, B	DAL
M8340103^15R4%&	15.4		C,H,K,M,V	F	A, B	DAL
M8340103^15R8%&	15.8	See PN Ordering Section	C,H,K,M,V	F	A, B	DAL

M8340103^16R0%&	16.0		C,H,K,M,V	G, J	A, B	DAL
M8340103^16R2%&	16.2		C,H,K,M,V	F	A, B	DAL
M8340103^16R5%&	16.5		C,H,K,M,V	F	A, B	DAL
M8340103^16R9%&	16.9		C,H,K,M,V	F	A, B	DAL
M8340103^17R4%&	17.4	See PN Ordering Section	C,H,K,M,V	F	A, B	DAL
M8340103^17R8%&	17.8		C,H,K,M,V	F	A, B	DAL
M8340103^18R0%&	18.0		C,H,K,M,V	G, J	A, B	DAL
	Resistance	Power	Char.	Res.		
Part Number	Value (Ohms)	Rating	(^)	Tolerance	Schematic	Manufacturer
M8340103^18R2%&	18.2		C,H,K,M,V	F	A, B	DAL
M8340103^18R7%&	18.7		C,H,K,M,V	F	A, B	DAL
M8340103^19R1%&	19.1	See PN Ordering Section	C,H,K,M,V	F	A, B	DAL
M8340103^19R6%&	19.6		C,H,K,M,V	F	A, B	DAL
M8340103^20R0%&	20.0		C,H,K,M,V	F, G, J	A, B	DAL
M8340103^20R5%&	20.5		C,H,K,M,V	F	A, B	DAL
M8340103^21R0%&	21.0		C,H,K,M,V	F	A, B	DAL
M8340103^21R5%&	21.5	See PN Ordering Section	C,H,K,M,V	F	A, B	DAL
M8340103^22R0%&	22.0		C,H,K,M,V	G, J	A, B	DAL
M8340103^22R1%&	22.1		C,H,K,M,V	F	A, B	DAL
M8340103^22R6%&	22.6		C,H,K,M,V	F	A, B	DAL
M8340103^23R2%&	23.2		C,H,K,M,V	F	A, B	DAL
M8340103^23R7%&	23.7	See PN Ordering Section	C,H,K,M,V	F	A, B	DAL
M8340103^24R0%&	24.0		C,H,K,M,V	F, G, J	A, B	DAL
	Resistance	Power	Char.	Res.		
Part Number	Value (Ohms)	Rating	(^)	Tolerance	Schematic	Manufacturer
M8340103^24R3%&	24.3		C,H,K,M,V	F	A, B	DAL
M8340103^24R9%&	24.9		C,H,K,M,V	F	A, B	DAL
M8340103^25R5%&	25.5		C,H,K,M,V	F	A, B	DAL
M8340103^26R1%&	26.1	See PN Ordering Section	C,H,K,M,V	F	A, B	DAL
M8340103^26R7%&	26.7		C,H,K,M,V	F	A, B	DAL
M8340103^27R0%&	27.0		C,H,K,M,V	G, J	A, B	DAL
M8340103^27R4%&	27.4		C,H,K,M,V	F	A, B	DAL
M8340103^28R0%&	28.0		C,H,K,M,V	F	A, B	DAL
M8340103^28R7%&	28.7	See PN Ordering Section	C,H,K,M,V	F	A, B	DAL
M8340103^29R4%&	29.4		C,H,K,M,V	F	A, B	DAL
M8340103^30R0%&	30.0		C,H,K,M,V	G, J	A, B	DAL
M8340103^30R1%&	30.1		C,H,K,M,V	F	A, B	DAL
M8340103^30R9%&	30.9		C,H,K,M,V	F	A, B	DAL
M8340103^31R6%&	31.6	See PN Ordering Section	C,H,K,M,V	F	A, B	DAL
	Resistance	Power	Char.	Res.		
Part Number	Value (Ohms)	Rating	(^)	Tolerance	Schematic	Manufacturer
M8340103^32R4%&	32.4		C,H,K,M,V	F	A, B	DAL
M8340103^33R0%&	33.0		C,H,K,M,V	G, J	A, B	DAL
M8340103^33R2%&	33.2		C,H,K,M,V	F	A, B	DAL
M8340103^34R0%&	34.0		C,H,K,M,V	F	A, B	DAL
M8340103^34R8%&	34.8	See PN Ordering Section	C,H,K,M,V	F	A, B	DAL
M8340103^35R7%&	35.7		C,H,K,M,V	F	A, B	DAL

M8340103^36R0%&	36.0		C,H,K,M,V	G, J	A, B	DAL
M8340103^36R5%&	36.5		C,H,K,M,V	F	A, B	DAL
M8340103^37R4%&	37.4		C,H,K,M,V	F	A, B	DAL
M8340103^38R3%&	38.3	See PN Ordering Section	C,H,K,M,V	F	A, B	DAL
M8340103^39R0%&	39.0		C,H,K,M,V	G, J	A, B	DAL
M8340103^39R2%&	39.2		C,H,K,M,V	F	A, B	DAL
M8340103^40R2%&	40.2		C,H,K,M,V	F	A, B	DAL
M8340103^41R2%&	41.2		C,H,K,M,V	F	A, B	DAL
	Resistance	Power	Char.	Res.		
Part Number	Value (Ohms)	Rating	(^)	Tolerance	Schematic	Manufacturer
M8340103^42R2%&	42.2	See PN Ordering Section	C,H,K,M,V	F	A, B	DAL
M8340103^43R0%&	43.0		C,H,K,M,V	G, J	A, B	DAL
M8340103^43R2%&	43.2		C,H,K,M,V	F	A, B	DAL
M8340103^44R2%&	44.2		C,H,K,M,V	F	A, B	DAL
M8340103^45R3%&	45.3		C,H,K,M,V	F	A, B	DAL
M8340103^46R4%&	46.4	See PN Ordering Section	C,H,K,M,V	F	A, B	DAL
M8340103^47R0%&	47.0		C,H,K,M,V	G, J	A, B	DAL
M8340103^47R5%&	47.5		C,H,K,M,V	F	A, B	DAL
M8340103^48R7%&	48.7		C,H,K,M,V	F	A, B	DAL
M8340103^49R9%&	49.9		C,H,K,M,V	F	A, B	DAL,IRC2
M8340103^51R0%&	51.0	See PN Ordering Section	C,H,K,M,V	G, J	A, B	DAL,IRC2
M8340103^51R1%&	51.1		C,H,K,M,V	F	A, B	DAL,IRC2
M8340103^52R3%&	52.3		C,H,K,M,V	F	A, B	DAL,IRC2
M8340103^53R6%&	53.6		C,H,K,M,V	F	A, B	DAL,IRC2
	Resistance	Power	Char.	Res.		
Part Number	Value (Ohms)	Rating	(^)	Tolerance	Schematic	Manufacturer
M8340103^54R9%&	54.9		C,H,K,M,V	F	A, B	DAL,IRC2
M8340103^56R0%&	56.0	See PN Ordering Section	C,H,K,M,V	G, J	A, B	DAL,IRC2
M8340103^56R2%&	56.2		C,H,K,M,V	F	A, B	DAL,IRC2
M8340103^57R6%&	57.6		C,H,K,M,V	F	A, B	DAL,IRC2
M8340103^59R0%&	59.0		C,H,K,M,V	F	A, B	DAL,IRC2
M8340103^60R4%&	60.4		C,H,K,M,V	F	A, B	DAL,IRC2
M8340103^61R9%&	61.9	See PN Ordering Section	C,H,K,M,V	F	A, B	DAL,IRC2
M8340103^62R0%&	62.0		C,H,K,M,V	G, J	A, B	DAL,IRC2
M8340103^63R4%&	63.4		C,H,K,M,V	F	A, B	DAL,IRC2
M8340103^64R9%&	64.9		C,H,K,M,V	F	A, B	DAL,IRC2
M8340103^66R5%&	66.5		C,H,K,M,V	F	A, B	DAL,IRC2
M8340103^68R0%&	68.0	See PN Ordering Section	C,H,K,M,V	G, J	A, B	DAL,IRC2
M8340103^68R1%&	68.1		C,H,K,M,V	F	A, B	DAL,IRC2
M8340103^69R8%&	69.8		C,H,K,M,V	F	A, B	DAL,IRC2
	Resistance	Power	Char.	Res.		
Part Number	Value (Ohms)	Rating	(^)	Tolerance	Schematic	Manufacturer
M8340103^71R5%&	71.5		C,H,K,M,V	F	A, B	DAL,IRC2
M8340103^73R2%&	73.2		C,H,K,M,V	F	A, B	DAL,IRC2
M8340103^75R0%&	75.0	See PN Ordering Section	C,H,K,M,V	F, G, J	A, B	DAL,IRC2
M8340103^76R8%&	76.8		C,H,K,M,V	F	A, B	DAL,IRC2
M8340103^78R7%&	78.7		C,H,K,M,V	F	A, B	DAL,IRC2

M8340103^80R6%&	80.6		C,H,K,M,V	F	A, B	DAL,IRC2
M8340103^82R0%&	82.0		C,H,K,M,V	G, J	A, B	DAL,IRC2
M8340103^82R5%&	82.5	See PN Ordering Section	C,H,K,M,V	F	A, B	DAL,IRC2
M8340103^84R5%&	84.5		C,H,K,M,V	F	A, B	DAL,IRC2
M8340103^86R6%&	86.6		C,H,K,M,V	F	A, B	DAL,IRC2
M8340103^88R7%&	88.7		C,H,K,M,V	F	A, B	DAL,IRC2
M8340103^90R9%&	90.9		C,H,K,M,V	F	A, B	DAL,IRC2
M8340103^91R0%&	91.0	See PN Ordering Section	C,H,K,M,V	G, J	A, B	DAL,IRC2
M8340103^93R1%&	93.1		C,H,K,M,V	F	A, B	DAL,IRC2
M8340103^95R3%&	95.3		C,H,K,M,V	F	A, B	DAL,IRC2
M8340103^97R6%&	97.6		C,H,K,M,V	F	A, B	DAL,IRC2
	Resistance	Power	Char.	Res.		
Part Number	Value (Ohms)	Rating	(^)	Tolerance	Schematic	Manufacturer

MIL-PRF-83401/3 (RZ030) Film Resistor Networks: 100 Ohms Through 988 Ohms

	Resistance	Power	Char.	Res.		
Part Number	Value (Ohms)	Rating	(^)	Tolerance	Schematic	Manufacturer
M8340103^1000%&	100		C,H,K,M,V	B, D, F, G, J	A, B	DAL,IRC2
M8340103^1010%&	101	See PN Ordering Section	C,H,K,M,V	B, D	A, B	DAL,IRC2
M8340103^1020%&	102		C,H,K,M,V	B, D, F	A, B	DAL,IRC2
M8340103^1040%&	104		C,H,K,M,V	B, D	A, B	DAL,IRC2
M8340103^1050%&	105		C,H,K,M,V	B, D, F	A, B	DAL,IRC2
M8340103^1060%&	106		C,H,K,M,V	B, D	A, B	DAL,IRC2
M8340103^1070%&	107	See PN Ordering Section	C,H,K,M,V	B, D, F	A, B	DAL,IRC2
M8340103^1090%&	109		C,H,K,M,V	B, D	A, B	DAL,IRC2
M8340103^1100%&	110		C,H,K,M,V	B, D, F, G, J	A, B	DAL,IRC2
M8340103^1110%&	111		C,H,K,M,V	B, D	A, B	DAL,IRC2
M8340103^1130%&	113		C,H,K,M,V	B, D, F	A, B	DAL,IRC2
M8340103^1140%&	114	See PN Ordering Section	C,H,K,M,V	B, D	A, B	DAL,IRC2
M8340103^1150%&	115		C,H,K,M,V	B, D, F	A, B	DAL,IRC2
M8340103^1170%&	117		C,H,K,M,V	B, D	A, B	DAL,IRC2
	Resistance	Power	Char.	Res.		
Part Number	Value (Ohms)	Rating	(^)	Tolerance	Schematic	Manufacturer
M8340103^1180%&	118		C,H,K,M,V	B, D, F	A, B	DAL,IRC2
M8340103^1200%&	120		C,H,K,M,V	B, D, F, G, J	A, B	DAL,IRC2
M8340103^1210%&	121	See PN Ordering Section	C,H,K,M,V	B, D, F	A, B	DAL,IRC2
M8340103^1230%&	123		C,H,K,M,V	B, D	A, B	DAL,IRC2
M8340103^1240%&	124		C,H,K,M,V	B, D, F	A, B	DAL,IRC2
M8340103^1260%&	126		C,H,K,M,V	B, D	A, B	DAL,IRC2
M8340103^1270%&	127		C,H,K,M,V	B, D, F	A, B	DAL,IRC2
M8340103^1290%&	129	See PN Ordering Section	C,H,K,M,V	B, D	A, B	DAL,IRC2
M8340103^1300%&	130		C,H,K,M,V	B, D, F, G, J	A, B	DAL,IRC2
M8340103^1320%&	132		C,H,K,M,V	B, D	A, B	DAL,IRC2
M8340103^1330%&	133		C,H,K,M,V	B, D, F	A, B	DAL,IRC2

M8340103^1350%&	135	See PN Ordering Section	C,H,K,M,V	B, D	A, B	DAL,IRC2
M8340103^1370%&	137		C,H,K,M,V	B, D, F	A, B	DAL,IRC2
M8340103^1380%&	138		C,H,K,M,V	B, D	A, B	DAL,IRC2
	Resistance	Power	Char.	Res.		
Part Number	Value (Ohms)	Rating	(^)	Tolerance	Schematic	Manufacturer
M8340103^1400%&	140		C,H,K,M,V	B, D, F	A, B	DAL,IRC2
M8340103^1420%&	142		C,H,K,M,V	B, D	A, B	DAL,IRC2
M8340103^1430%&	143	See PN Ordering Section	C,H,K,M,V	B, D, F	A, B	DAL,IRC2
M8340103^1450%&	145		C,H,K,M,V	B, D	A, B	DAL,IRC2
M8340103^1470%&	147		C,H,K,M,V	B, D, F	A, B	DAL,IRC2
M8340103^1490%&	149		C,H,K,M,V	B, D	A, B	DAL,IRC2
M8340103^1500%&	150		C,H,K,M,V	B, D, F, G, J	A, B	DAL,IRC2
M8340103^1520%&	152	See PN Ordering Section	C,H,K,M,V	B, D	A, B	DAL,IRC2
M8340103^1540%&	154		C,H,K,M,V	B, D, F	A, B	DAL,IRC2
M8340103^1560%&	156		C,H,K,M,V	B, D	A, B	DAL,IRC2
M8340103^1580%&	158		C,H,K,M,V	B, D, F	A, B	DAL,IRC2
M8340103^1600%&	160		C,H,K,M,V	B, D, G, J	A, B	DAL,IRC2
M8340103^1620%&	162	See PN Ordering Section	C,H,K,M,V	B, D, F	A, B	DAL,IRC2
M8340103^1640%&	164		C,H,K,M,V	B, D	A, B	DAL,IRC2
	Resistance	Power	Char.	Res.		
Part Number	Value (Ohms)	Rating	(^)	Tolerance	Schematic	Manufacturer
M8340103^1650%&	165		C,H,K,M,V	B, D, F	A, B	DAL,IRC2
M8340103^1670%&	167		C,H,K,M,V	B, D	A, B	DAL,IRC2
M8340103^1690%&	169		C,H,K,M,V	B, D, F	A, B	DAL,IRC2
M8340103^1720%&	172	See PN Ordering Section	C,H,K,M,V	B, D	A, B	DAL,IRC2
M8340103^1740%&	174		C,H,K,M,V	B, D, F	A, B	DAL,IRC2
M8340103^1760%&	176		C,H,K,M,V	B, D	A, B	DAL,IRC2
M8340103^1780%&	178		C,H,K,M,V	B, D, F	A, B	DAL,IRC2
M8340103^1800%&	180		C,H,K,M,V	B, D, G, J	A, B	DAL,IRC2
M8340103^1820%&	182	See PN Ordering Section	C,H,K,M,V	B, D, F	A, B	DAL,IRC2
M8340103^1840%&	184		C,H,K,M,V	B, D	A, B	DAL,IRC2
M8340103^1870%&	187		C,H,K,M,V	B, D, F	A, B	DAL,IRC2
M8340103^1890%&	189		C,H,K,M,V	B, D	A, B	DAL,IRC2
M8340103^1910%&	191		C,H,K,M,V	B, D, F	A, B	DAL,IRC2
M8340103^1930%&	193	See PN Ordering Section	C,H,K,M,V	B, D	A, B	DAL,IRC2
	Resistance	Power	Char.	Res.		
Part Number	Value (Ohms)	Rating	(^)	Tolerance	Schematic	Manufacturer
M8340103^1960%&	196		C,H,K,M,V	B, D, F	A, B	DAL,IRC2
M8340103^1980%&	198		C,H,K,M,V	B, D	A, B	DAL,IRC2
M8340103^2000%&	200		C,H,K,M,V	B, D, F, G, J	A, B	DAL,IRC2
M8340103^2030%&	203		C,H,K,M,V	B, D	A, B	DAL,IRC2
M8340103^2050%&	205	See PN Ordering Section	C,H,K,M,V	B, D, F	A, B	DAL,IRC2
M8340103^2080%&	208		C,H,K,M,V	B, D	A, B	DAL,IRC2
M8340103^2100%&	210		C,H,K,M,V	B, D, F	A, B	DAL,IRC2
M8340103^2130%&	213		C,H,K,M,V	B, D	A, B	DAL,IRC2
M8340103^2150%&	215		C,H,K,M,V	B, D, F	A, B	DAL,IRC2
M8340103^2180%&	218	See PN Ordering Section	C,H,K,M,V	B, D	A, B	DAL,IRC2

M8340103^2200%&	220		C,H,K,M,V	G, J	A, B	DAL,IRC2
M8340103^2210%&	221		C,H,K,M,V	B, D, F	A, B	DAL,IRC2
M8340103^2230%&	223		C,H,K,M,V	B, D	A, B	DAL,IRC2
M8340103^2260%&	226		C,H,K,M,V	B, D, F	A, B	DAL,IRC2
	Resistance	Power	Char.	Res.		
Part Number	Value (Ohms)	Rating	(^)	Tolerance	Schematic	Manufacturer
M8340103^2290%&	229	See PN Ordering Section	C,H,K,M,V	B, D	A, B	DAL,IRC2
M8340103^2320%&	232		C,H,K,M,V	B, D, F	A, B	DAL,IRC2
M8340103^2340%&	234		C,H,K,M,V	B, D	A, B	DAL,IRC2
M8340103^2370%&	237		C,H,K,M,V	B, D, F	A, B	DAL,IRC2
M8340103^2400%&	240		C,H,K,M,V	B, D, F, G, J	A, B	DAL,IRC2
M8340103^2430%&	243	See PN Ordering Section	C,H,K,M,V	B, D, F	A, B	DAL,IRC2
M8340103^2460%&	246		C,H,K,M,V	B, D	A, B	DAL,IRC2
M8340103^2490%&	249		C,H,K,M,V	B, D, F	A, B	DAL,IRC2
M8340103^2520%&	252		C,H,K,M,V	B, D	A, B	DAL,IRC2
M8340103^2550%&	255		C,H,K,M,V	B, D, F	A, B	DAL,IRC2
M8340103^2580%&	258	See PN Ordering Section	C,H,K,M,V	B, D	A, B	DAL,IRC2
M8340103^2610%&	261		C,H,K,M,V	B, D, F	A, B	DAL,IRC2
M8340103^2640%&	264		C,H,K,M,V	B, D	A, B	DAL,IRC2
M8340103^2670%&	267		C,H,K,M,V	B, D, F	A, B	DAL,IRC2
	Resistance	Power	Char.	Res.		
Part Number	Value (Ohms)	Rating	(^)	Tolerance	Schematic	Manufacturer
M8340103^2700%&	270		C,H,K,M,V	G, J	A, B	DAL,IRC2
M8340103^2710%&	271	See PN Ordering Section	C,H,K,M,V	B, D	A, B	DAL,IRC2
M8340103^2740%&	274		C,H,K,M,V	B, D, F	A, B	DAL,IRC2
M8340103^2770%&	277		C,H,K,M,V	B, D	A, B	DAL,IRC2
M8340103^2800%&	280		C,H,K,M,V	B, D, F	A, B	DAL,IRC2
M8340103^2840%&	284		C,H,K,M,V	B, D	A, B	DAL,IRC2
M8340103^2870%&	287	See PN Ordering Section	C,H,K,M,V	B, D, F	A, B	DAL,IRC2
M8340103^2910%&	291		C,H,K,M,V	B, D	A, B	DAL,IRC2
M8340103^2940%&	294		C,H,K,M,V	B, D, F	A, B	DAL,IRC2
M8340103^2980%&	298		C,H,K,M,V	B, D	A, B	DAL,IRC2
M8340103^3000%&	300		C,H,K,M,V	G, J	A, B	DAL,IRC2
M8340103^3010%&	301	See PN Ordering Section	C,H,K,M,V	B, D, F	A, B	DAL,IRC2
M8340103^3050%&	305		C,H,K,M,V	B, D	A, B	DAL,IRC2
M8340103^3090%&	309		C,H,K,M,V	B, D, F	A, B	DAL,IRC2
	Resistance	Power	Char.	Res.		
Part Number	Value (Ohms)	Rating	(^)	Tolerance	Schematic	Manufacturer
M8340103^3120%&	312		C,H,K,M,V	B, D	A, B	DAL,IRC2
M8340103^3160%&	316		C,H,K,M,V	B, D, F	A, B	DAL,IRC2
M8340103^3200%&	320	See PN Ordering Section	C,H,K,M,V	B, D	A, B	DAL,IRC2
M8340103^3240%&	324		C,H,K,M,V	B, D, F	A, B	DAL,IRC2
M8340103^3280%&	328		C,H,K,M,V	B, D	A, B	DAL,IRC2
M8340103^3300%&	330		C,H,K,M,V	G, J	A, B	DAL,IRC2
M8340103^3320%&	332		C,H,K,M,V	B, D, F	A, B	DAL,IRC2
M8340103^3360%&	336	See PN Ordering Section	C,H,K,M,V	B, D	A, B	DAL,IRC2
M8340103^3400%&	340		C,H,K,M,V	B, D, F	A, B	DAL,IRC2

M8340103^3440%&	344		C,H,K,M,V	B, D	A, B	DAL,IRC2
M8340103^3480%&	348		C,H,K,M,V	B, D, F	A, B	DAL,IRC2
M8340103^3520%&	352		C,H,K,M,V	B, D	A, B	DAL,IRC2
M8340103^3570%&	357	See PN Ordering Section	C,H,K,M,V	B, D, F	A, B	DAL,IRC2
M8340103^3600%&	360		C,H,K,M,V	G, J	A, B	DAL,IRC2
	Resistance	Power	Char.	Res.		
Part Number	Value (Ohms)	Rating	(^)	Tolerance	Schematic	Manufacturer
M8340103^3610%&	361		C,H,K,M,V	B, D	A, B	DAL,IRC2
M8340103^3650%&	365		C,H,K,M,V	B, D, F	A, B	DAL,IRC2
M8340103^3700%&	370		C,H,K,M,V	B, D	A, B	DAL,IRC2
M8340103^3740%&	374	See PN Ordering Section	C,H,K,M,V	B, D, F	A, B	DAL,IRC2
M8340103^3790%&	379		C,H,K,M,V	B, D	A, B	DAL,IRC2
M8340103^3830%&	383		C,H,K,M,V	B, D, F	A, B	DAL,IRC2
M8340103^3880%&	388		C,H,K,M,V	B, D	A, B	DAL,IRC2
M8340103^3900%&	390		C,H,K,M,V	G, J	A, B	DAL,IRC2
M8340103^3920%&	392	See PN Ordering Section	C,H,K,M,V	B, D, F	A, B	DAL,IRC2
M8340103^3970%&	397		C,H,K,M,V	B, D	A, B	DAL,IRC2
M8340103^4020%&	402		C,H,K,M,V	B, D, F	A, B	DAL,IRC2
M8340103^4070%&	407		C,H,K,M,V	B, D	A, B	DAL,IRC2
M8340103^4120%&	412		C,H,K,M,V	B, D, F	A, B	DAL,IRC2
M8340103^4170%&	417	See PN Ordering Section	C,H,K,M,V	B, D	A, B	DAL,IRC2
	Resistance	Power	Char.	Res.		
Part Number	Value (Ohms)	Rating	(^)	Tolerance	Schematic	Manufacturer
M8340103^4220%&	422		C,H,K,M,V	B, D, F	A, B	DAL,IRC2
M8340103^4270%&	427		C,H,K,M,V	B, D	A, B	DAL,IRC2
M8340103^4300%&	430		C,H,K,M,V	G, J	A, B	DAL,IRC2
M8340103^4320%&	432		C,H,K,M,V	B, D, F	A, B	DAL,IRC2
M8340103^4370%&	437	See PN Ordering Section	C,H,K,M,V	B, D	A, B	DAL,IRC2
M8340103^4420%&	442		C,H,K,M,V	B, D, F	A, B	DAL,IRC2
M8340103^4480%&	448		C,H,K,M,V	B, D	A, B	DAL,IRC2
M8340103^4530%&	453		C,H,K,M,V	B, D, F	A, B	DAL,IRC2
M8340103^4590%&	459		C,H,K,M,V	B, D	A, B	DAL,IRC2
M8340103^4640%&	464	See PN Ordering Section	C,H,K,M,V	B, D, F	A, B	DAL,IRC2
M8340103^4700%&	470		C,H,K,M,V	B, D, G, J	A, B	DAL,IRC2
M8340103^4750%&	475		C,H,K,M,V	B, D, F	A, B	DAL,IRC2
M8340103^4810%&	481		C,H,K,M,V	B, D	A, B	DAL,IRC2
M8340103^4870%&	487		C,H,K,M,V	B, D, F	A, B	DAL,IRC2
	Resistance	Power	Char.	Res.		
Part Number	Value (Ohms)	Rating	(^)	Tolerance	Schematic	Manufacturer
M8340103^4930%&	493	See PN Ordering Section	C,H,K,M,V	B, D	A, B	DAL,IRC2
M8340103^4990%&	499		C,H,K,M,V	B, D, F	A, B	DAL,IRC2
M8340103^5050%&	505		C,H,K,M,V	B, D	A, B	DAL,IRC2
M8340103^5100%&	510		C,H,K,M,V	G, J	A, B	DAL,IRC2
M8340103^5110%&	511		C,H,K,M,V	B, D, F	A, B	DAL,IRC2
M8340103^5170%&	517	See PN Ordering Section	C,H,K,M,V	B, D	A, B	DAL,IRC2
M8340103^5230%&	523		C,H,K,M,V	B, D, F	A, B	DAL,IRC2
M8340103^5300%&	530		C,H,K,M,V	B, D	A, B	DAL,IRC2

M8340103^5360%&	536		C,H,K,M,V	B, D, F	A, B	DAL,IRC2
M8340103^5420%&	542		C,H,K,M,V	B, D	A, B	DAL,IRC2
M8340103^5490%&	549	See PN Ordering Section	C,H,K,M,V	B, D, F	A, B	DAL,IRC2
M8340103^5560%&	556		C,H,K,M,V	B, D	A, B	DAL,IRC2
M8340103^5600%&	560		C,H,K,M,V	G, J	A, B	DAL,IRC2
M8340103^5620%&	562		C,H,K,M,V	B, D, F	A, B	DAL,IRC2
	Resistance	Power	Char.	Res.		
Part Number	Value (Ohms)	Rating	(^)	Tolerance	Schematic	Manufacturer
M8340103^5690%&	569		C,H,K,M,V	B, D	A, B	DAL,IRC2
M8340103^5760%&	576	See PN Ordering Section	C,H,K,M,V	B, D, F	A, B	DAL,IRC2
M8340103^5830%&	583		C,H,K,M,V	B, D	A, B	DAL,IRC2
M8340103^5900%&	590		C,H,K,M,V	B, D, F	A, B	DAL,IRC2
M8340103^5970%&	597		C,H,K,M,V	B, D	A, B	DAL,IRC2
M8340103^6040%&	604		C,H,K,M,V	B, D, F	A, B	DAL,IRC2
M8340103^6120%&	612	See PN Ordering Section	C,H,K,M,V	B, D	A, B	DAL,IRC2
M8340103^6190%&	619		C,H,K,M,V	B, D, F	A, B	DAL,IRC2
M8340103^6200%&	620		C,H,K,M,V	G, J	A, B	DAL,IRC2
M8340103^6260%&	626		C,H,K,M,V	B, D	A, B	DAL,IRC2
M8340103^6340%&	634		C,H,K,M,V	B, D, F	A, B	DAL,IRC2
M8340103^6420%&	642	See PN Ordering Section	C,H,K,M,V	B, D	A, B	DAL,IRC2
M8340103^6490%&	649		C,H,K,M,V	B, D, F	A, B	DAL,IRC2
	Resistance	Power	Char.	Res.		
Part Number	Value (Ohms)	Rating	(^)	Tolerance	Schematic	Manufacturer
M8340103^6570%&	657		C,H,K,M,V	B, D	A, B	DAL,IRC2
M8340103^6650%&	665		C,H,K,M,V	B, D, F	A, B	DAL,IRC2
M8340103^6730%&	673		C,H,K,M,V	B, D	A, B	DAL,IRC2
M8340103^6800%&	680	See PN Ordering Section	C,H,K,M,V	G, J	A, B	DAL,IRC2
M8340103^6810%&	681		C,H,K,M,V	B, D, F	A, B	DAL,IRC2
M8340103^6900%&	690		C,H,K,M,V	B, D	A, B	DAL,IRC2
M8340103^6980%&	698		C,H,K,M,V	B, D, F	A, B	DAL,IRC2
M8340103^7060%&	706		C,H,K,M,V	B, D	A, B	DAL,IRC2
M8340103^7150%&	715	See PN Ordering Section	C,H,K,M,V	B, D, F	A, B	DAL,IRC2
M8340103^7230%&	723		C,H,K,M,V	B, D	A, B	DAL,IRC2
M8340103^7320%&	732		C,H,K,M,V	B, D, F	A, B	DAL,IRC2
M8340103^7410%&	741		C,H,K,M,V	B, D	A, B	DAL,IRC2
M8340103^7500%&	750		C,H,K,M,V	B, D, F, G, J	A, B	DAL,IRC2
M8340103^7590%&	759	See PN Ordering Section	C,H,K,M,V	B, D	A, B	DAL,IRC2
	Resistance	Power	Char.	Res.		
Part Number	Value (Ohms)	Rating	(^)	Tolerance	Schematic	Manufacturer
M8340103^7680%&	768		C,H,K,M,V	B, D, F	A, B	DAL,IRC2
M8340103^7770%&	777		C,H,K,M,V	B, D	A, B	DAL,IRC2
M8340103^7870%&	787		C,H,K,M,V	B, D, F	A, B	DAL,IRC2
M8340103^7960%&	796		C,H,K,M,V	B, D	A, B	DAL,IRC2
M8340103^8060%&	806	See PN Ordering Section	C,H,K,M,V	B, D, F	A, B	DAL,IRC2
M8340103^8160%&	816		C,H,K,M,V	B, D	A, B	DAL,IRC2
M8340103^8200%&	820		C,H,K,M,V	G, J	A, B	DAL,IRC2
M8340103^8250%&	825		C,H,K,M,V	B, D, F	A, B	DAL,IRC2

M8340103^8350%&	835		C,H,K,M,V	B, D	A, B	DAL,IRC2
M8340103^8450%&	845	See PN Ordering Section	C,H,K,M,V	B, D, F	A, B	DAL,IRC2
M8340103^8560%&	856		C,H,K,M,V	B, D	A, B	DAL,IRC2
M8340103^8660%&	866		C,H,K,M,V	B, D, F	A, B	DAL,IRC2
M8340103^8760%&	876		C,H,K,M,V	B, D	A, B	DAL,IRC2
M8340103^8870%&	887		C,H,K,M,V	B, D, F	A, B	DAL,IRC2
	Resistance	Power	Char.	Res.		
Part Number	Value (Ohms)	Rating	(^)	Tolerance	Schematic	Manufacturer
M8340103^8980%&	898	See PN Ordering Section	C,H,K,M,V	B, D	A, B	DAL,IRC2
M8340103^9090%&	909		C,H,K,M,V	B, D, F	A, B	DAL,IRC2
M8340103^9100%&	910		C,H,K,M,V	G, J	A, B	DAL,IRC2
M8340103^9200%&	920		C,H,K,M,V	B, D	A, B	DAL,IRC2
M8340103^9310%&	931		C,H,K,M,V	B, D, F	A, B	DAL,IRC2
M8340103^9420%&	942	See PN Ordering Section	C,H,K,M,V	B, D	A, B	DAL,IRC2
M8340103^9530%&	953		C,H,K,M,V	B, D, F	A, B	DAL,IRC2
M8340103^9650%&	965		C,H,K,M,V	B, D	A, B	DAL,IRC2
M8340103^9760%&	976		C,H,K,M,V	B, D, F	A, B	DAL,IRC2
M8340103^9880%&	988		C,H,K,M,V	B, D	A, B	DAL,IRC2
	Resistance	Power	Char.	Res.		
Part Number	Value (Ohms)	Rating	(^)	Tolerance	Schematic	Manufacturer

MIL-PRF-83401/3 (RZ030) Film Resistor Networks: 1,000 Ohms Through 9,880 Ohms

	Resistance	Power	Char.	Res.		
Part Number	Value (Ohms)	Rating	(^)	Tolerance	Schematic	Manufacturer
M8340103^1001%&	1,000	See PN Ordering Section	C,H,K,M,V	B, D, F, G, J	A, B	DAL,IRC2
M8340103^1011%&	1,010		C,H,K,M,V	B, D	A, B	DAL,IRC2
M8340103^1021%&	1,020		C,H,K,M,V	B, D, F	A, B	DAL,IRC2
M8340103^1041%&	1,040		C,H,K,M,V	B, D	A, B	DAL,IRC2
M8340103^1051%&	1,050		C,H,K,M,V	B, D, F	A, B	DAL,IRC2
M8340103^1061%&	1,060	See PN Ordering Section	C,H,K,M,V	B, D	A, B	DAL,IRC2
M8340103^1071%&	1,070		C,H,K,M,V	B, D, F	A, B	DAL,IRC2
M8340103^1091%&	1,090		C,H,K,M,V	B, D	A, B	DAL,IRC2
M8340103^1101%&	1,100		C,H,K,M,V	B, D, F, G, J	A, B	DAL,IRC2
M8340103^1111%&	1,110		C,H,K,M,V	B, D	A, B	DAL,IRC2
M8340103^1131%&	1,130	See PN Ordering Section	C,H,K,M,V	B, D, F	A, B	DAL,IRC2
M8340103^1141%&	1,140		C,H,K,M,V	B, D	A, B	DAL,IRC2
M8340103^1151%&	1,150		C,H,K,M,V	B, D, F	A, B	DAL,IRC2
M8340103^1171%&	1,170		C,H,K,M,V	B, D	A, B	DAL,IRC2
	Resistance	Power	Char.	Res.		
Part Number	Value (Ohms)	Rating	(^)	Tolerance	Schematic	Manufacturer
M8340103^1181%&	1,180		C,H,K,M,V	B, D, F	A, B	DAL,IRC2
M8340103^1201%&	1,200	See PN Ordering Section	C,H,K,M,V	B, D, F, G, J	A, B	DAL,IRC2
M8340103^1211%&	1,210		C,H,K,M,V	B, D, F	A, B	DAL,IRC2
M8340103^1231%&	1,230		C,H,K,M,V	B, D	A, B	DAL,IRC2

M8340103^1241%&	1,240		C,H,K,M,V	B, D, F	A, B	DAL,IRC2
M8340103^1261%&	1,260		C,H,K,M,V	B, D	A, B	DAL,IRC2
M8340103^1271%&	1,270	See PN Ordering Section	C,H,K,M,V	B, D, F	A, B	DAL,IRC2
M8340103^1291%&	1,290		C,H,K,M,V	B, D	A, B	DAL,IRC2
M8340103^1301%&	1,300		C,H,K,M,V	B, D, F, G, J	A, B	DAL,IRC2
M8340103^1321%&	1,320		C,H,K,M,V	B, D	A, B	DAL,IRC2
M8340103^1331%&	1,330		C,H,K,M,V	B, D, F	A, B	DAL,IRC2
M8340103^1351%&	1,350	See PN Ordering Section	C,H,K,M,V	B, D	A, B	DAL,IRC2
M8340103^1371%&	1,370		C,H,K,M,V	B, D, F	A, B	DAL,IRC2
M8340103^1381%&	1,380		C,H,K,M,V	B, D	A, B	DAL,IRC2
	Resistance	Power	Char.	Res.		
Part Number	Value (Ohms)	Rating	(^)	Tolerance	Schematic	Manufacturer
M8340103^1401%&	1,400		C,H,K,M,V	B, D, F	A, B	DAL,IRC2
M8340103^1421%&	1,420		C,H,K,M,V	B, D	A, B	DAL,IRC2
M8340103^1431%&	1,430	See PN Ordering Section	C,H,K,M,V	B, D, F	A, B	DAL,IRC2
M8340103^1451%&	1,450		C,H,K,M,V	B, D	A, B	DAL,IRC2
M8340103^1471%&	1,470		C,H,K,M,V	B, D, F	A, B	DAL,IRC2
M8340103^1491%&	1,490		C,H,K,M,V	B, D	A, B	DAL,IRC2
M8340103^1501%&	1,500		C,H,K,M,V	B, D, F, G, J	A, B	DAL,IRC2
M8340103^1521%&	1,520	See PN Ordering Section	C,H,K,M,V	B, D	A, B	DAL,IRC2
M8340103^1541%&	1,540		C,H,K,M,V	B, D, F	A, B	DAL,IRC2
M8340103^1561%&	1,560		C,H,K,M,V	B, D	A, B	DAL,IRC2
M8340103^1581%&	1,580		C,H,K,M,V	B, D, F	A, B	DAL,IRC2
M8340103^1601%&	1,600		C,H,K,M,V	B, D, G, J	A, B	DAL,IRC2
M8340103^1621%&	1,620	See PN Ordering Section	C,H,K,M,V	B, D, F	A, B	DAL,IRC2
M8340103^1641%&	1,640		C,H,K,M,V	B, D	A, B	DAL,IRC2
	Resistance	Power	Char.	Res.		
Part Number	Value (Ohms)	Rating	(^)	Tolerance	Schematic	Manufacturer
M8340103^1651%&	1,650		C,H,K,M,V	B, D, F	A, B	DAL,IRC2
M8340103^1671%&	1,670		C,H,K,M,V	B, D	A, B	DAL,IRC2
M8340103^1691%&	1,690		C,H,K,M,V	B, D, F	A, B	DAL,IRC2
M8340103^1721%&	1,720	See PN Ordering Section	C,H,K,M,V	B, D	A, B	DAL,IRC2
M8340103^1741%&	1,740		C,H,K,M,V	B, D, F	A, B	DAL,IRC2
M8340103^1761%&	1,760		C,H,K,M,V	B, D	A, B	DAL,IRC2
M8340103^1781%&	1,780		C,H,K,M,V	B, D, F	A, B	DAL,IRC2
M8340103^1801%&	1,800		C,H,K,M,V	B, D, G, J	A, B	DAL,IRC2
M8340103^1821%&	1,820	See PN Ordering Section	C,H,K,M,V	B, D, F	A, B	DAL,IRC2
M8340103^1841%&	1,840		C,H,K,M,V	B, D	A, B	DAL,IRC2
M8340103^1871%&	1,870		C,H,K,M,V	B, D, F	A, B	DAL,IRC2
M8340103^1891%&	1,890		C,H,K,M,V	B, D	A, B	DAL,IRC2
M8340103^1911%&	1,910		C,H,K,M,V	B, D, F	A, B	DAL,IRC2
M8340103^1931%&	1,930	See PN Ordering Section	C,H,K,M,V	B, D	A, B	DAL,IRC2
	Resistance	Power	Char.	Res.		
Part Number	Value (Ohms)	Rating	(^)	Tolerance	Schematic	Manufacturer
M8340103^1961%&	1,960		C,H,K,M,V	B, D, F	A, B	DAL,IRC2
M8340103^1981%&	1,980		C,H,K,M,V	B, D	A, B	DAL,IRC2
M8340103^2001%&	2,000		C,H,K,M,V	B, D, F, G, J	A, B	DAL,IRC2

M8340103^2031%&	2,030		C,H,K,M,V	B, D	A, B	DAL,IRC2
M8340103^2051%&	2,050	See PN Ordering Section	C,H,K,M,V	B, D, F	A, B	DAL,IRC2
M8340103^2081%&	2,080		C,H,K,M,V	B, D	A, B	DAL,IRC2
M8340103^2101%&	2,100		C,H,K,M,V	B, D, F	A, B	DAL,IRC2
M8340103^2131%&	2,130		C,H,K,M,V	B, D	A, B	DAL,IRC2
M8340103^2151%&	2,150		C,H,K,M,V	B, D, F	A, B	DAL,IRC2
M8340103^2181%&	2,180	See PN Ordering Section	C,H,K,M,V	B, D	A, B	DAL,IRC2
M8340103^2201%&	2,200		C,H,K,M,V	G, J	A, B	DAL,IRC2
M8340103^2211%&	2,210		C,H,K,M,V	B, D, F	A, B	DAL,IRC2
M8340103^2231%&	2,230		C,H,K,M,V	B, D	A, B	DAL,IRC2
M8340103^2261%&	2,260		C,H,K,M,V	B, D, F	A, B	DAL,IRC2
	Resistance	Power	Char.	Res.		
Part Number	Value (Ohms)	Rating	(^)	Tolerance	Schematic	Manufacturer
M8340103^2291%&	2,290	See PN Ordering Section	C,H,K,M,V	B, D	A, B	DAL,IRC2
M8340103^2321%&	2,320		C,H,K,M,V	B, D, F	A, B	DAL,IRC2
M8340103^2341%&	2,340		C,H,K,M,V	B, D	A, B	DAL,IRC2
M8340103^2371%&	2,370		C,H,K,M,V	B, D, F	A, B	DAL,IRC2
M8340103^2401%&	2,400		C,H,K,M,V	B, D, F, G, J	A, B	DAL,IRC2
M8340103^2431%&	2,430	See PN Ordering Section	C,H,K,M,V	B, D, F	A, B	DAL,IRC2
M8340103^2461%&	2,460		C,H,K,M,V	B, D	A, B	DAL,IRC2
M8340103^2491%&	2,490		C,H,K,M,V	B, D, F	A, B	DAL,IRC2
M8340103^2521%&	2,520		C,H,K,M,V	B, D	A, B	DAL,IRC2
M8340103^2551%&	2,550		C,H,K,M,V	B, D, F	A, B	DAL,IRC2
M8340103^2581%&	2,580	See PN Ordering Section	C,H,K,M,V	B, D	A, B	DAL,IRC2
M8340103^2611%&	2,610		C,H,K,M,V	B, D, F	A, B	DAL,IRC2
M8340103^2641%&	2,640		C,H,K,M,V	B, D	A, B	DAL,IRC2
M8340103^2671%&	2,670		C,H,K,M,V	B, D, F	A, B	DAL,IRC2
	Resistance	Power	Char.	Res.		
Part Number	Value (Ohms)	Rating	(^)	Tolerance	Schematic	Manufacturer
M8340103^2701%&	2,700		C,H,K,M,V	G, J	A, B	DAL,IRC2
M8340103^2711%&	2,710	See PN Ordering Section	C,H,K,M,V	B, D	A, B	DAL,IRC2
M8340103^2741%&	2,740		C,H,K,M,V	B, D, F	A, B	DAL,IRC2
M8340103^2771%&	2,770		C,H,K,M,V	B, D	A, B	DAL,IRC2
M8340103^2801%&	2,800		C,H,K,M,V	B, D, F	A, B	DAL,IRC2
M8340103^2841%&	2,840		C,H,K,M,V	B, D	A, B	DAL,IRC2
M8340103^2871%&	2,870	See PN Ordering Section	C,H,K,M,V	B, D, F	A, B	DAL,IRC2
M8340103^2911%&	2,910		C,H,K,M,V	B, D	A, B	DAL,IRC2
M8340103^2941%&	2,940		C,H,K,M,V	B, D, F	A, B	DAL,IRC2
M8340103^2981%&	2,980		C,H,K,M,V	B, D	A, B	DAL,IRC2
M8340103^3001%&	3,000		C,H,K,M,V	G, J	A, B	DAL,IRC2
M8340103^3011%&	3,010	See PN Ordering Section	C,H,K,M,V	B, D, F	A, B	DAL,IRC2
M8340103^3051%&	3,050		C,H,K,M,V	B, D	A, B	DAL,IRC2
M8340103^3091%&	3,090		C,H,K,M,V	B, D, F	A, B	DAL,IRC2
	Resistance	Power	Char.	Res.		
Part Number	Value (Ohms)	Rating	(^)	Tolerance	Schematic	Manufacturer
M8340103^3121%&	3,120		C,H,K,M,V	B, D	A, B	DAL,IRC2
M8340103^3161%&	3,160		C,H,K,M,V	B, D, F	A, B	DAL,IRC2

M8340103^3201%&	3,200	See PN Ordering Section	C,H,K,M,V	B, D	A, B	DAL,IRC2
M8340103^3241%&	3,240		C,H,K,M,V	B, D, F	A, B	DAL,IRC2
M8340103^3281%&	3,280		C,H,K,M,V	B, D	A, B	DAL,IRC2
M8340103^3301%&	3,300		C,H,K,M,V	G, J	A, B	DAL,IRC2
M8340103^3321%&	3,320		C,H,K,M,V	B, D, F	A, B	DAL,IRC2
M8340103^3361%&	3,360	See PN Ordering Section	C,H,K,M,V	B, D	A, B	DAL,IRC2
M8340103^3401%&	3,400		C,H,K,M,V	B, D, F	A, B	DAL,IRC2
M8340103^3441%&	3,440		C,H,K,M,V	B, D	A, B	DAL,IRC2
M8340103^3481%&	3,480		C,H,K,M,V	B, D, F	A, B	DAL,IRC2
M8340103^3521%&	3,520		C,H,K,M,V	B, D	A, B	DAL,IRC2
M8340103^3571%&	3,570	See PN Ordering Section	C,H,K,M,V	B, D, F	A, B	DAL,IRC2
M8340103^3601%&	3,600		C,H,K,M,V	G, J	A, B	DAL,IRC2
	Resistance	Power	Char.	Res.		
Part Number	Value (Ohms)	Rating	(^)	Tolerance	Schematic	Manufacturer
M8340103^3611%&	3,610		C,H,K,M,V	B, D	A, B	DAL,IRC2
M8340103^3651%&	3,650		C,H,K,M,V	B, D, F	A, B	DAL,IRC2
M8340103^3701%&	3,700		C,H,K,M,V	B, D	A, B	DAL,IRC2
M8340103^3741%&	3,740	See PN Ordering Section	C,H,K,M,V	B, D, F	A, B	DAL,IRC2
M8340103^3791%&	3,790		C,H,K,M,V	B, D	A, B	DAL,IRC2
M8340103^3831%&	3,830		C,H,K,M,V	B, D, F	A, B	DAL,IRC2
M8340103^3881%&	3,880		C,H,K,M,V	B, D	A, B	DAL,IRC2
M8340103^3901%&	3,900		C,H,K,M,V	G, J	A, B	DAL,IRC2
M8340103^3921%&	3,920	See PN Ordering Section	C,H,K,M,V	B, D, F	A, B	DAL,IRC2
M8340103^3971%&	3,970		C,H,K,M,V	B, D	A, B	DAL,IRC2
M8340103^4021%&	4,020		C,H,K,M,V	B, D, F	A, B	DAL,IRC2
M8340103^4071%&	4,070		C,H,K,M,V	B, D	A, B	DAL,IRC2
M8340103^4121%&	4,120		C,H,K,M,V	B, D, F	A, B	DAL,IRC2
M8340103^4171%&	4,170	See PN Ordering Section	C,H,K,M,V	B, D	A, B	DAL,IRC2
	Resistance	Power	Char.	Res.		
Part Number	Value (Ohms)	Rating	(^)	Tolerance	Schematic	Manufacturer
M8340103^4221%&	4,220		C,H,K,M,V	B, D, F	A, B	DAL,IRC2
M8340103^4271%&	4,270		C,H,K,M,V	B, D	A, B	DAL,IRC2
M8340103^4301%&	4,300		C,H,K,M,V	G, J	A, B	DAL,IRC2
M8340103^4321%&	4,320		C,H,K,M,V	B, D, F	A, B	DAL,IRC2
M8340103^4371%&	4,370	See PN Ordering Section	C,H,K,M,V	B, D	A, B	DAL,IRC2
M8340103^4421%&	4,420		C,H,K,M,V	B, D, F	A, B	DAL,IRC2
M8340103^4481%&	4,480		C,H,K,M,V	B, D	A, B	DAL,IRC2
M8340103^4531%&	4,530		C,H,K,M,V	B, D, F	A, B	DAL,IRC2
M8340103^4591%&	4,590		C,H,K,M,V	B, D	A, B	DAL,IRC2
M8340103^4641%&	4,640	See PN Ordering Section	C,H,K,M,V	B, D, F	A, B	DAL,IRC2
M8340103^4701%&	4,700		C,H,K,M,V	B, D, G, J	A, B	DAL,IRC2
M8340103^4751%&	4,750		C,H,K,M,V	B, D, F	A, B	DAL,IRC2
M8340103^4811%&	4,810		C,H,K,M,V	B, D	A, B	DAL,IRC2
M8340103^4871%&	4,870		C,H,K,M,V	B, D, F	A, B	DAL,IRC2
	Resistance	Power	Char.	Res.		
Part Number	Value (Ohms)	Rating	(^)	Tolerance	Schematic	Manufacturer
M8340103^4931%&	4,930	See PN Ordering Section	C,H,K,M,V	B, D	A, B	DAL,IRC2

M8340103^4991%&	4,990		C,H,K,M,V	B, D, F	A, B	DAL,IRC2
M8340103^5051%&	5,050		C,H,K,M,V	B, D	A, B	DAL,IRC2
M8340103^5101%&	5,100		C,H,K,M,V	G, J	A, B	DAL,IRC2
M8340103^5111%&	5,110		C,H,K,M,V	B, D, F	A, B	DAL,IRC2
M8340103^5171%&	5,170	See PN Ordering Section	C,H,K,M,V	B, D	A, B	DAL,IRC2
M8340103^5231%&	5,230		C,H,K,M,V	B, D, F	A, B	DAL,IRC2
M8340103^5301%&	5,300		C,H,K,M,V	B, D	A, B	DAL,IRC2
M8340103^5361%&	5,360		C,H,K,M,V	B, D, F	A, B	DAL,IRC2
M8340103^5421%&	5,420		C,H,K,M,V	B, D	A, B	DAL,IRC2
M8340103^5491%&	5,490	See PN Ordering Section	C,H,K,M,V	B, D, F	A, B	DAL,IRC2
M8340103^5561%&	5,560		C,H,K,M,V	B, D	A, B	DAL,IRC2
M8340103^5601%&	5,600		C,H,K,M,V	G, J	A, B	DAL,IRC2
M8340103^5621%&	5,620		C,H,K,M,V	B, D, F	A, B	DAL,IRC2
	Resistance	Power	Char.	Res.		
Part Number	Value (Ohms)	Rating	(^)	Tolerance	Schematic	Manufacturer
M8340103^5691%&	5,690		C,H,K,M,V	B, D	A, B	DAL,IRC2
M8340103^5761%&	5,760	See PN Ordering Section	C,H,K,M,V	B, D, F	A, B	DAL,IRC2
M8340103^5831%&	5,830		C,H,K,M,V	B, D	A, B	DAL,IRC2
M8340103^5901%&	5,900		C,H,K,M,V	B, D, F	A, B	DAL,IRC2
M8340103^5971%&	5,970		C,H,K,M,V	B, D	A, B	DAL,IRC2
M8340103^6041%&	6,040		C,H,K,M,V	B, D, F	A, B	DAL,IRC2
M8340103^6121%&	6,120	See PN Ordering Section	C,H,K,M,V	B, D	A, B	DAL,IRC2
M8340103^6191%&	6,190		C,H,K,M,V	B, D, F	A, B	DAL,IRC2
M8340103^6201%&	6,200		C,H,K,M,V	G, J	A, B	DAL,IRC2
M8340103^6261%&	6,260		C,H,K,M,V	B, D	A, B	DAL,IRC2
M8340103^6341%&	6,340		C,H,K,M,V	B, D, F	A, B	DAL,IRC2
M8340103^6421%&	6,420	See PN Ordering Section	C,H,K,M,V	B, D	A, B	DAL,IRC2
M8340103^6491%&	6,490		C,H,K,M,V	B, D, F	A, B	DAL,IRC2
	Resistance	Power	Char.	Res.		
Part Number	Value (Ohms)	Rating	(^)	Tolerance	Schematic	Manufacturer
M8340103^6571%&	6,570		C,H,K,M,V	B, D	A, B	DAL,IRC2
M8340103^6651%&	6,650		C,H,K,M,V	B, D, F	A, B	DAL,IRC2
M8340103^6731%&	6,730		C,H,K,M,V	B, D	A, B	DAL,IRC2
M8340103^6801%&	6,800	See PN Ordering Section	C,H,K,M,V	G, J	A, B	DAL,IRC2
M8340103^6811%&	6,810		C,H,K,M,V	B, D, F	A, B	DAL,IRC2
M8340103^6901%&	6,900		C,H,K,M,V	B, D	A, B	DAL,IRC2
M8340103^6981%&	6,980		C,H,K,M,V	B, D, F	A, B	DAL,IRC2
M8340103^7061%&	7,060		C,H,K,M,V	B, D	A, B	DAL,IRC2
M8340103^7151%&	7,150	See PN Ordering Section	C,H,K,M,V	B, D, F	A, B	DAL,IRC2
M8340103^7231%&	7,230		C,H,K,M,V	B, D	A, B	DAL,IRC2
M8340103^7321%&	7,320		C,H,K,M,V	B, D, F	A, B	DAL,IRC2
M8340103^7411%&	7,410		C,H,K,M,V	B, D	A, B	DAL,IRC2
M8340103^7501%&	7,500		C,H,K,M,V	B, D, F, G, J	A, B	DAL,IRC2
M8340103^7591%&	7,590	See PN Ordering Section	C,H,K,M,V	B, D	A, B	DAL,IRC2
	Resistance	Power	Char.	Res.		
Part Number	Value (Ohms)	Rating	(^)	Tolerance	Schematic	Manufacturer
M8340103^7681%&	7,680		C,H,K,M,V	B, D, F	A, B	DAL,IRC2

M8340103^7771%&	7,770		C,H,K,M,V	B, D	A, B	DAL,IRC2
M8340103^7871%&	7,870		C,H,K,M,V	B, D, F	A, B	DAL,IRC2
M8340103^7961%&	7,960		C,H,K,M,V	B, D	A, B	DAL,IRC2
M8340103^8061%&	8,060	See PN Ordering Section	C,H,K,M,V	B, D, F	A, B	DAL,IRC2
M8340103^8161%&	8,160		C,H,K,M,V	B, D	A, B	DAL,IRC2
M8340103^8201%&	8,200		C,H,K,M,V	G, J	A, B	DAL,IRC2
M8340103^8251%&	8,250		C,H,K,M,V	B, D, F	A, B	DAL,IRC2
M8340103^8351%&	8,350		C,H,K,M,V	B, D	A, B	DAL,IRC2
M8340103^8451%&	8,450	See PN Ordering Section	C,H,K,M,V	B, D, F	A, B	DAL,IRC2
M8340103^8561%&	8,560		C,H,K,M,V	B, D	A, B	DAL,IRC2
M8340103^8661%&	8,660		C,H,K,M,V	B, D, F	A, B	DAL,IRC2
M8340103^8761%&	8,760		C,H,K,M,V	B, D	A, B	DAL,IRC2
M8340103^8871%&	8,870		C,H,K,M,V	B, D, F	A, B	DAL,IRC2
	Resistance	Power	Char.	Res.		
Part Number	Value (Ohms)	Rating	(^)	Tolerance	Schematic	Manufacturer
M8340103^8981%&	8,980	See PN Ordering Section	C,H,K,M,V	B, D	A, B	DAL,IRC2
M8340103^9091%&	9,090		C,H,K,M,V	B, D, F	A, B	DAL,IRC2
M8340103^9101%&	9,100		C,H,K,M,V	G, J	A, B	DAL,IRC2
M8340103^9201%&	9,200		C,H,K,M,V	B, D	A, B	DAL,IRC2
M8340103^9311%&	9,310		C,H,K,M,V	B, D, F	A, B	DAL,IRC2
M8340103^9421%&	9,420	See PN Ordering Section	C,H,K,M,V	B, D	A, B	DAL,IRC2
M8340103^9531%&	9,530		C,H,K,M,V	B, D, F	A, B	DAL,IRC2
M8340103^9651%&	9,650		C,H,K,M,V	B, D	A, B	DAL,IRC2
M8340103^9761%&	9,760		C,H,K,M,V	B, D, F	A, B	DAL,IRC2
M8340103^9881%&	9,880		C,H,K,M,V	B, D	A, B	DAL,IRC2
	Resistance	Power	Char.	Res.		
Part Number	Value (Ohms)	Rating	(^)	Tolerance	Schematic	Manufacturer

MIL-PRF-83401/3 (RZ030) Film Resistor Networks: 10,000 Ohms Through 98,800 Ohms

	Resistance	Power	Char.	Res.		
Part Number	Value (Ohms)	Rating	(^)	Tolerance	Schematic	Manufacturer
M8340103^1002%&	10,000	See PN Ordering Section	C,H,K,M,V	B, D, F, G, J	A, B	DAL,IRC2
M8340103^1012%&	10,100		C,H,K,M,V	B, D	A, B	DAL,IRC2
M8340103^1022%&	10,200		C,H,K,M,V	B, D, F	A, B	DAL,IRC2
M8340103^1042%&	10,400		C,H,K,M,V	B, D	A, B	DAL,IRC2
M8340103^1052%&	10,500		C,H,K,M,V	B, D, F	A, B	DAL,IRC2
M8340103^1062%&	10,600	See PN Ordering Section	C,H,K,M,V	B, D	A, B	DAL,IRC2
M8340103^1072%&	10,700		C,H,K,M,V	B, D, F	A, B	DAL,IRC2
M8340103^1092%&	10,900		C,H,K,M,V	B, D	A, B	DAL,IRC2
M8340103^1102%&	11,000		C,H,K,M,V	B, D, F, G, J	A, B	DAL,IRC2
M8340103^1112%&	11,100		C,H,K,M,V	B, D	A, B	DAL,IRC2
M8340103^1132%&	11,300	See PN Ordering Section	C,H,K,M,V	B, D, F	A, B	DAL,IRC2
M8340103^1142%&	11,400		C,H,K,M,V	B, D	A, B	DAL,IRC2
M8340103^1152%&	11,500		C,H,K,M,V	B, D, F	A, B	DAL,IRC2

M8340103^1172%&	11,700		C,H,K,M,V	B, D	A, B	DAL,IRC2
	Resistance	Power	Char.	Res.		
Part Number	Value (Ohms)	Rating	(^)	Tolerance	Schematic	Manufacturer
M8340103^1182%&	11,800		C,H,K,M,V	B, D, F	A, B	DAL,IRC2
M8340103^1202%&	12,000	See PN Ordering Section	C,H,K,M,V	B, D, F, G, J	A, B	DAL,IRC2
M8340103^1212%&	12,100		C,H,K,M,V	B, D, F	A, B	DAL,IRC2
M8340103^1232%&	12,300		C,H,K,M,V	B, D	A, B	DAL,IRC2
M8340103^1242%&	12,400		C,H,K,M,V	B, D, F	A, B	DAL,IRC2
M8340103^1262%&	12,600		C,H,K,M,V	B, D	A, B	DAL,IRC2
M8340103^1272%&	12,700	See PN Ordering Section	C,H,K,M,V	B, D, F	A, B	DAL,IRC2
M8340103^1292%&	12,900		C,H,K,M,V	B, D	A, B	DAL,IRC2
M8340103^1302%&	13,000		C,H,K,M,V	B, D, F, G, J	A, B	DAL,IRC2
M8340103^1322%&	13,200		C,H,K,M,V	B, D	A, B	DAL,IRC2
M8340103^1332%&	13,300		C,H,K,M,V	B, D, F	A, B	DAL,IRC2
M8340103^1352%&	13,500	See PN Ordering Section	C,H,K,M,V	B, D	A, B	DAL,IRC2
M8340103^1372%&	13,700		C,H,K,M,V	B, D, F	A, B	DAL,IRC2
M8340103^1382%&	13,800		C,H,K,M,V	B, D	A, B	DAL,IRC2
	Resistance	Power	Char.	Res.		
Part Number	Value (Ohms)	Rating	(^)	Tolerance	Schematic	Manufacturer
M8340103^1402%&	14,000		C,H,K,M,V	B, D, F	A, B	DAL,IRC2
M8340103^1422%&	14,200		C,H,K,M,V	B, D	A, B	DAL,IRC2
M8340103^1432%&	14,300	See PN Ordering Section	C,H,K,M,V	B, D, F	A, B	DAL,IRC2
M8340103^1452%&	14,500		C,H,K,M,V	B, D	A, B	DAL,IRC2
M8340103^1472%&	14,700		C,H,K,M,V	B, D, F	A, B	DAL,IRC2
M8340103^1492%&	14,900		C,H,K,M,V	B, D	A, B	DAL,IRC2
M8340103^1502%&	15,000		C,H,K,M,V	B, D, F, G, J	A, B	DAL,IRC2
M8340103^1522%&	15,200	See PN Ordering Section	C,H,K,M,V	B, D	A, B	DAL,IRC2
M8340103^1542%&	15,400		C,H,K,M,V	B, D, F	A, B	DAL,IRC2
M8340103^1562%&	15,600		C,H,K,M,V	B, D	A, B	DAL,IRC2
M8340103^1582%&	15,800		C,H,K,M,V	B, D, F	A, B	DAL,IRC2
M8340103^1602%&	16,000		C,H,K,M,V	B, D, G, J	A, B	DAL,IRC2
M8340103^1622%&	16,200	See PN Ordering Section	C,H,K,M,V	B, D, F	A, B	DAL,IRC2
M8340103^1642%&	16,400		C,H,K,M,V	B, D	A, B	DAL,IRC2
	Resistance	Power	Char.	Res.		
Part Number	Value (Ohms)	Rating	(^)	Tolerance	Schematic	Manufacturer
M8340103^1652%&	16,500		C,H,K,M,V	B, D, F	A, B	DAL,IRC2
M8340103^1672%&	16,700		C,H,K,M,V	B, D	A, B	DAL,IRC2
M8340103^1692%&	16,900		C,H,K,M,V	B, D, F	A, B	DAL,IRC2
M8340103^1722%&	17,200	See PN Ordering Section	C,H,K,M,V	B, D	A, B	DAL,IRC2
M8340103^1742%&	17,400		C,H,K,M,V	B, D, F	A, B	DAL,IRC2
M8340103^1762%&	17,600		C,H,K,M,V	B, D	A, B	DAL,IRC2
M8340103^1782%&	17,800		C,H,K,M,V	B, D, F	A, B	DAL,IRC2
M8340103^1802%&	18,000		C,H,K,M,V	B, D, G, J	A, B	DAL,IRC2
M8340103^1822%&	18,200	See PN Ordering Section	C,H,K,M,V	B, D, F	A, B	DAL,IRC2
M8340103^1842%&	18,400		C,H,K,M,V	B, D	A, B	DAL,IRC2
M8340103^1872%&	18,700		C,H,K,M,V	B, D, F	A, B	DAL,IRC2
M8340103^1892%&	18,900		C,H,K,M,V	B, D	A, B	DAL,IRC2

M8340103^1912%&	19,100		C,H,K,M,V	B, D, F	A, B	DAL,IRC2
M8340103^1932%&	19,300	See PN Ordering Section	C,H,K,M,V	B, D	A, B	DAL,IRC2
	Resistance	Power	Char.	Res.		
Part Number	Value (Ohms)	Rating	(^)	Tolerance	Schematic	Manufacturer
M8340103^1962%&	19,600		C,H,K,M,V	B, D, F	A, B	DAL,IRC2
M8340103^1982%&	19,800		C,H,K,M,V	B, D	A, B	DAL,IRC2
M8340103^2002%&	20,000		C,H,K,M,V	B, D, F, G, J	A, B	DAL,IRC2
M8340103^2032%&	20,300		C,H,K,M,V	B, D	A, B	DAL,IRC2
M8340103^2052%&	20,500	See PN Ordering Section	C,H,K,M,V	B, D, F	A, B	DAL,IRC2
M8340103^2082%&	20,800		C,H,K,M,V	B, D	A, B	DAL,IRC2
M8340103^2102%&	21,000		C,H,K,M,V	B, D, F	A, B	DAL,IRC2
M8340103^2132%&	21,300		C,H,K,M,V	B, D	A, B	DAL,IRC2
M8340103^2152%&	21,500		C,H,K,M,V	B, D, F	A, B	DAL,IRC2
M8340103^2182%&	21,800	See PN Ordering Section	C,H,K,M,V	B, D	A, B	DAL,IRC2
M8340103^2202%&	22,000		C,H,K,M,V	G, J	A, B	DAL,IRC2
M8340103^2212%&	22,100		C,H,K,M,V	B, D, F	A, B	DAL,IRC2
M8340103^2232%&	22,300		C,H,K,M,V	B, D	A, B	DAL,IRC2
M8340103^2262%&	22,600		C,H,K,M,V	B, D, F	A, B	DAL,IRC2
	Resistance	Power	Char.	Res.		
Part Number	Value (Ohms)	Rating	(^)	Tolerance	Schematic	Manufacturer
M8340103^2292%&	22,900	See PN Ordering Section	C,H,K,M,V	B, D	A, B	DAL,IRC2
M8340103^2322%&	23,200		C,H,K,M,V	B, D, F	A, B	DAL,IRC2
M8340103^2342%&	23,400		C,H,K,M,V	B, D	A, B	DAL,IRC2
M8340103^2372%&	23,700		C,H,K,M,V	B, D, F	A, B	DAL,IRC2
M8340103^2402%&	24,000		C,H,K,M,V	B, D, F, G, J	A, B	DAL,IRC2
M8340103^2432%&	24,300	See PN Ordering Section	C,H,K,M,V	B, D, F	A, B	DAL,IRC2
M8340103^2462%&	24,600		C,H,K,M,V	B, D	A, B	DAL,IRC2
M8340103^2492%&	24,900		C,H,K,M,V	B, D, F	A, B	DAL,IRC2
M8340103^2522%&	25,200		C,H,K,M,V	B, D	A, B	DAL,IRC2
M8340103^2552%&	25,500		C,H,K,M,V	B, D, F	A, B	DAL,IRC2
M8340103^2582%&	25,800	See PN Ordering Section	C,H,K,M,V	B, D	A, B	DAL,IRC2
M8340103^2612%&	26,100		C,H,K,M,V	B, D, F	A, B	DAL,IRC2
M8340103^2642%&	26,400		C,H,K,M,V	B, D	A, B	DAL,IRC2
M8340103^2672%&	26,700		C,H,K,M,V	B, D, F	A, B	DAL,IRC2
	Resistance	Power	Char.	Res.		
Part Number	Value (Ohms)	Rating	(^)	Tolerance	Schematic	Manufacturer
M8340103^2702%&	27,000		C,H,K,M,V	G, J	A, B	DAL,IRC2
M8340103^2712%&	27,100	See PN Ordering Section	C,H,K,M,V	B, D	A, B	DAL,IRC2
M8340103^2742%&	27,400		C,H,K,M,V	B, D, F	A, B	DAL,IRC2
M8340103^2772%&	27,700		C,H,K,M,V	B, D	A, B	DAL,IRC2
M8340103^2802%&	28,000		C,H,K,M,V	B, D, F	A, B	DAL,IRC2
M8340103^2842%&	28,400		C,H,K,M,V	B, D	A, B	DAL,IRC2
M8340103^2872%&	28,700	See PN Ordering Section	C,H,K,M,V	B, D, F	A, B	DAL,IRC2
M8340103^2912%&	29,100		C,H,K,M,V	B, D	A, B	DAL,IRC2
M8340103^2942%&	29,400		C,H,K,M,V	B, D, F	A, B	DAL,IRC2
M8340103^2982%&	29,800		C,H,K,M,V	B, D	A, B	DAL,IRC2
M8340103^3002%&	30,000		C,H,K,M,V	G, J	A, B	DAL,IRC2

M8340103^3012%&	30,100	See PN Ordering Section	C,H,K,M,V	B, D, F	A, B	DAL,IRC2
M8340103^3052%&	30,500		C,H,K,M,V	B, D	A, B	DAL,IRC2
M8340103^3092%&	30,900		C,H,K,M,V	B, D, F	A, B	DAL,IRC2
	Resistance	Power	Char.	Res.		
Part Number	Value (Ohms)	Rating	(^)	Tolerance	Schematic	Manufacturer
M8340103^3122%&	31,200		C,H,K,M,V	B, D	A, B	DAL,IRC2
M8340103^3162%&	31,600		C,H,K,M,V	B, D, F	A, B	DAL,IRC2
M8340103^3202%&	32,000	See PN Ordering Section	C,H,K,M,V	B, D	A, B	DAL,IRC2
M8340103^3242%&	32,400		C,H,K,M,V	B, D, F	A, B	DAL,IRC2
M8340103^3282%&	32,800		C,H,K,M,V	B, D	A, B	DAL,IRC2
M8340103^3302%&	33,000		C,H,K,M,V	G, J	A, B	DAL,IRC2
M8340103^3322%&	33,200		C,H,K,M,V	B, D, F	A, B	DAL,IRC2
M8340103^3362%&	33,600	See PN Ordering Section	C,H,K,M,V	B, D	A, B	DAL,IRC2
M8340103^3402%&	34,000		C,H,K,M,V	B, D, F	A, B	DAL,IRC2
M8340103^3442%&	34,400		C,H,K,M,V	B, D	A, B	DAL,IRC2
M8340103^3482%&	34,800		C,H,K,M,V	B, D, F	A, B	DAL,IRC2
M8340103^3522%&	35,200		C,H,K,M,V	B, D	A, B	DAL,IRC2
M8340103^3572%&	35,700	See PN Ordering Section	C,H,K,M,V	B, D, F	A, B	DAL,IRC2
M8340103^3602%&	36,000		C,H,K,M,V	G, J	A, B	DAL,IRC2
	Resistance	Power	Char.	Res.		
Part Number	Value (Ohms)	Rating	(^)	Tolerance	Schematic	Manufacturer
M8340103^3612%&	36,100		C,H,K,M,V	B, D	A, B	DAL,IRC2
M8340103^3652%&	36,500		C,H,K,M,V	B, D, F	A, B	DAL,IRC2
M8340103^3702%&	37,000		C,H,K,M,V	B, D	A, B	DAL,IRC2
M8340103^3742%&	37,400	See PN Ordering Section	C,H,K,M,V	B, D, F	A, B	DAL,IRC2
M8340103^3792%&	37,900		C,H,K,M,V	B, D	A, B	DAL,IRC2
M8340103^3832%&	38,300		C,H,K,M,V	B, D, F	A, B	DAL,IRC2
M8340103^3882%&	38,800		C,H,K,M,V	B, D	A, B	DAL,IRC2
M8340103^3902%&	39,000		C,H,K,M,V	G, J	A, B	DAL,IRC2
M8340103^3922%&	39,200	See PN Ordering Section	C,H,K,M,V	B, D, F	A, B	DAL,IRC2
M8340103^3972%&	39,700		C,H,K,M,V	B, D	A, B	DAL,IRC2
M8340103^4022%&	40,200		C,H,K,M,V	B, D, F	A, B	DAL,IRC2
M8340103^4072%&	40,700		C,H,K,M,V	B, D	A, B	DAL,IRC2
M8340103^4122%&	41,200		C,H,K,M,V	B, D, F	A, B	DAL,IRC2
M8340103^4172%&	41,700	See PN Ordering Section	C,H,K,M,V	B, D	A, B	DAL,IRC2
	Resistance	Power	Char.	Res.		
Part Number	Value (Ohms)	Rating	(^)	Tolerance	Schematic	Manufacturer
M8340103^4222%&	42,200		C,H,K,M,V	B, D, F	A, B	DAL,IRC2
M8340103^4272%&	42,700		C,H,K,M,V	B, D	A, B	DAL,IRC2
M8340103^4302%&	43,000		C,H,K,M,V	G, J	A, B	DAL,IRC2
M8340103^4322%&	43,200		C,H,K,M,V	B, D, F	A, B	DAL,IRC2
M8340103^4372%&	43,700	See PN Ordering Section	C,H,K,M,V	B, D	A, B	DAL,IRC2
M8340103^4422%&	44,200		C,H,K,M,V	B, D, F	A, B	DAL,IRC2
M8340103^4482%&	44,800		C,H,K,M,V	B, D	A, B	DAL,IRC2
M8340103^4532%&	45,300		C,H,K,M,V	B, D, F	A, B	DAL,IRC2
M8340103^4592%&	45,900		C,H,K,M,V	B, D	A, B	DAL,IRC2
M8340103^4642%&	46,400	See PN Ordering Section	C,H,K,M,V	B, D, F	A, B	DAL,IRC2

M8340103^4702%&	47,000		C,H,K,M,V	B, D, G, J	A, B	DAL,IRC2
M8340103^4752%&	47,500		C,H,K,M,V	B, D, F	A, B	DAL,IRC2
M8340103^4812%&	48,100		C,H,K,M,V	B, D	A, B	DAL,IRC2
M8340103^4872%&	48,700		C,H,K,M,V	B, D, F	A, B	DAL,IRC2
	Resistance	Power	Char.	Res.		
Part Number	Value (Ohms)	Rating	(^)	Tolerance	Schematic	Manufacturer
M8340103^4932%&	49,300	See PN Ordering Section	C,H,K,M,V	B, D	A, B	DAL,IRC2
M8340103^4992%&	49,900		C,H,K,M,V	B, D, F	A, B	DAL,IRC2
M8340103^5052%&	50,500		C,H,K,M,V	B, D	A, B	DAL,IRC2
M8340103^5102%&	51,000		C,H,K,M,V	G, J	A, B	DAL,IRC2
M8340103^5112%&	51,100		C,H,K,M,V	B, D, F	A, B	DAL,IRC2
M8340103^5172%&	51,700	See PN Ordering Section	C,H,K,M,V	B, D	A, B	DAL,IRC2
M8340103^5232%&	52,300		C,H,K,M,V	B, D, F	A, B	DAL,IRC2
M8340103^5302%&	53,000		C,H,K,M,V	B, D	A, B	DAL,IRC2
M8340103^5362%&	53,600		C,H,K,M,V	B, D, F	A, B	DAL,IRC2
M8340103^5422%&	54,200		C,H,K,M,V	B, D	A, B	DAL,IRC2
M8340103^5492%&	54,900	See PN Ordering Section	C,H,K,M,V	B, D, F	A, B	DAL,IRC2
M8340103^5562%&	55,600		C,H,K,M,V	B, D	A, B	DAL,IRC2
M8340103^5602%&	56,000		C,H,K,M,V	G, J	A, B	DAL,IRC2
M8340103^5622%&	56,200		C,H,K,M,V	B, D, F	A, B	DAL,IRC2
	Resistance	Power	Char.	Res.		
Part Number	Value (Ohms)	Rating	(^)	Tolerance	Schematic	Manufacturer
M8340103^5692%&	56,900		C,H,K,M,V	B, D	A, B	DAL,IRC2
M8340103^5762%&	57,600	See PN Ordering Section	C,H,K,M,V	B, D, F	A, B	DAL,IRC2
M8340103^5832%&	58,300		C,H,K,M,V	B, D	A, B	DAL,IRC2
M8340103^5902%&	59,000		C,H,K,M,V	B, D, F	A, B	DAL,IRC2
M8340103^5972%&	59,700		C,H,K,M,V	B, D	A, B	DAL,IRC2
M8340103^6042%&	60,400		C,H,K,M,V	B, D, F	A, B	DAL,IRC2
M8340103^6122%&	61,200	See PN Ordering Section	C,H,K,M,V	B, D	A, B	DAL,IRC2
M8340103^6192%&	61,900		C,H,K,M,V	B, D, F	A, B	DAL,IRC2
M8340103^6202%&	62,000		C,H,K,M,V	G, J	A, B	DAL,IRC2
M8340103^6262%&	62,600		C,H,K,M,V	B, D	A, B	DAL,IRC2
M8340103^6342%&	63,400		C,H,K,M,V	B, D, F	A, B	DAL,IRC2
M8340103^6422%&	64,200	See PN Ordering Section	C,H,K,M,V	B, D	A, B	DAL,IRC2
M8340103^6492%&	64,900		C,H,K,M,V	B, D, F	A, B	DAL,IRC2
	Resistance	Power	Char.	Res.		
Part Number	Value (Ohms)	Rating	(^)	Tolerance	Schematic	Manufacturer
M8340103^6572%&	65,700		C,H,K,M,V	B, D	A, B	DAL,IRC2
M8340103^6652%&	66,500		C,H,K,M,V	B, D, F	A, B	DAL,IRC2
M8340103^6732%&	67,300		C,H,K,M,V	B, D	A, B	DAL,IRC2
M8340103^6802%&	68,000	See PN Ordering Section	C,H,K,M,V	G, J	A, B	DAL,IRC2
M8340103^6812%&	68,100		C,H,K,M,V	B, D, F	A, B	DAL,IRC2
M8340103^6902%&	69,000		C,H,K,M,V	B, D	A, B	DAL,IRC2
M8340103^6982%&	69,800		C,H,K,M,V	B, D, F	A, B	DAL,IRC2
M8340103^7062%&	70,600		C,H,K,M,V	B, D	A, B	DAL,IRC2
M8340103^7152%&	71,500	See PN Ordering Section	C,H,K,M,V	B, D, F	A, B	DAL,IRC2
M8340103^7232%&	72,300		C,H,K,M,V	B, D	A, B	DAL,IRC2

M8340103^7322%&	73,200		C,H,K,M,V	B, D, F	A, B	DAL,IRC2
M8340103^7412%&	74,100		C,H,K,M,V	B, D	A, B	DAL,IRC2
M8340103^7502%&	75,000		C,H,K,M,V	B, D, F, G, J	A, B	DAL,IRC2
M8340103^7592%&	75,900	See PN Ordering Section	C,H,K,M,V	B, D	A, B	DAL,IRC2
	Resistance	Power	Char.	Res.		
Part Number	Value (Ohms)	Rating	(^)	Tolerance	Schematic	Manufacturer
M8340103^7682%&	76,800		C,H,K,M,V	B, D, F	A, B	DAL,IRC2
M8340103^7772%&	77,700		C,H,K,M,V	B, D	A, B	DAL,IRC2
M8340103^7872%&	78,700		C,H,K,M,V	B, D, F	A, B	DAL,IRC2
M8340103^7962%&	79,600		C,H,K,M,V	B, D	A, B	DAL,IRC2
M8340103^8062%&	80,600	See PN Ordering Section	C,H,K,M,V	B, D, F	A, B	DAL,IRC2
M8340103^8162%&	81,600		C,H,K,M,V	B, D	A, B	DAL,IRC2
M8340103^8202%&	82,000		C,H,K,M,V	G, J	A, B	DAL,IRC2
M8340103^8252%&	82,500		C,H,K,M,V	B, D, F	A, B	DAL,IRC2
M8340103^8352%&	83,500		C,H,K,M,V	B, D	A, B	DAL,IRC2
M8340103^8452%&	84,500	See PN Ordering Section	C,H,K,M,V	B, D, F	A, B	DAL,IRC2
M8340103^8562%&	85,600		C,H,K,M,V	B, D	A, B	DAL,IRC2
M8340103^8662%&	86,600		C,H,K,M,V	B, D, F	A, B	DAL,IRC2
M8340103^8762%&	87,600		C,H,K,M,V	B, D	A, B	DAL,IRC2
M8340103^8872%&	88,700		C,H,K,M,V	B, D, F	A, B	DAL,IRC2
	Resistance	Power	Char.	Res.		
Part Number	Value (Ohms)	Rating	(^)	Tolerance	Schematic	Manufacturer
M8340103^8982%&	89,800	See PN Ordering Section	C,H,K,M,V	B, D	A, B	DAL,IRC2
M8340103^9092%&	90,900		C,H,K,M,V	B, D, F	A, B	DAL,IRC2
M8340103^9102%&	91,000		C,H,K,M,V	G, J	A, B	DAL,IRC2
M8340103^9202%&	92,000		C,H,K,M,V	B, D	A, B	DAL,IRC2
M8340103^9312%&	93,100		C,H,K,M,V	B, D, F	A, B	DAL,IRC2
M8340103^9422%&	94,200	See PN Ordering Section	C,H,K,M,V	B, D	A, B	DAL,IRC2
M8340103^9532%&	95,300		C,H,K,M,V	B, D, F	A, B	DAL,IRC2
M8340103^9652%&	96,500		C,H,K,M,V	B, D	A, B	DAL,IRC2
M8340103^9762%&	97,600		C,H,K,M,V	B, D, F	A, B	DAL,IRC2
M8340103^9882%&	98,800		C,H,K,M,V	B, D	A, B	DAL,IRC2
	Resistance	Power	Char.	Res.		
Part Number	Value (Ohms)	Rating	(^)	Tolerance	Schematic	Manufacturer

MIL-PRF-83401/3 (RZ030) Film Resistor Networks: 100,000 Ohms Through 1,000,000 Ohms

	Resistance	Power	Char.	Res.		
Part Number	Value (Ohms)	Rating	(^)	Tolerance	Schematic	Manufacturer
M8340103^1003%&	100,000	See PN Ordering Section	C,H,K,M,V	B, D, F, G, J	A, B	DAL,IRC2
M8340103^1023%&	102,000		C,H,K,M,V	F	A, B	DAL,IRC2
M8340103^1053%&	105,000		C,H,K,M,V	F	A, B	DAL,IRC2
M8340103^1073%&	107,000		C,H,K,M,V	F	A, B	DAL,IRC2
M8340103^1103%&	110,000		C,H,K,M,V	F, G, J	A, B	DAL,IRC2
M8340103^1133%&	113,000	See PN Ordering Section	C,H,K,M,V	F	A, B	DAL,IRC2

M8340103^1153%&	115,000		C,H,K,M,V	F	A, B	DAL,IRC2
M8340103^1183%&	118,000		C,H,K,M,V	F	A, B	DAL,IRC2
M8340103^1203%&	120,000	See PN Ordering Section	C,H,K,M,V	F, G, J	A, B	DAL,IRC2
M8340103^1213%&	121,000		C,H,K,M,V	F	A, B	DAL,IRC2
M8340103^1243%&	124,000		C,H,K,M,V	F	A, B	DAL
M8340103^1273%&	127,000	See PN Ordering Section	C,H,K,M,V	F	A, B	DAL
M8340103^1303%&	130,000		C,H,K,M,V	F, G, J	A, B	DAL
M8340103^1333%&	133,000		C,H,K,M,V	F	A, B	DAL
	Resistance	Power	Char.	Res.		
Part Number	Value (Ohms)	Rating	(^)	Tolerance	Schematic	Manufacturer
M8340103^1373%&	137,000		C,H,K,M,V	F	A, B	DAL
M8340103^1403%&	140,000		C,H,K,M,V	F	A, B	DAL
M8340103^1433%&	143,000	See PN Ordering Section	C,H,K,M,V	F	A, B	DAL
M8340103^1473%&	147,000		C,H,K,M,V	F	A, B	DAL
M8340103^1503%&	150,000		C,H,K,M,V	F, G, J	A, B	DAL
M8340103^1543%&	154,000		C,H,K,M,V	F	A, B	DAL
M8340103^1583%&	158,000		C,H,K,M,V	F	A, B	DAL
M8340103^1603%&	160,000		C,H,K,M,V	G, J	A, B	DAL
M8340103^1623%&	162,000	See PN Ordering Section	C,H,K,M,V	F	A, B	DAL
M8340103^1653%&	165,000		C,H,K,M,V	F	A, B	DAL
M8340103^1693%&	169,000		C,H,K,M,V	F	A, B	DAL
M8340103^1743%&	174,000		C,H,K,M,V	F	A, B	DAL
M8340103^1783%&	178,000		C,H,K,M,V	F	A, B	DAL
M8340103^1803%&	180,000		C,H,K,M,V	G, J	A, B	DAL
	Resistance	Power	Char.	Res.		
Part Number	Value (Ohms)	Rating	(^)	Tolerance	Schematic	Manufacturer
M8340103^1823%&	182,000	See PN Ordering Section	C,H,K,M,V	F	A, B	DAL
M8340103^1873%&	187,000		C,H,K,M,V	F	A, B	DAL
M8340103^1913%&	191,000		C,H,K,M,V	F	A, B	DAL
M8340103^1963%&	196,000		C,H,K,M,V	F	A, B	DAL
M8340103^2003%&	200,000		C,H,K,M,V	F, G, J	A, B	DAL
M8340103^2053%&	205,000	See PN Ordering Section	C,H,K,M,V	F	A, B	DAL
M8340103^2103%&	210,000		C,H,K,M,V	F	A, B	DAL
M8340103^2153%&	215,000		C,H,K,M,V	F	A, B	DAL
M8340103^2183%&	218,000	See PN Ordering Section	C,H,K,M,V		A, B	DAL
M8340103^2203%&	220,000		C,H,K,M,V	G, J	A, B	DAL
M8340103^2213%&	221,000		C,H,K,M,V	F	A, B	DAL
M8340103^2263%&	226,000		C,H,K,M,V	F	A, B	DAL
M8340103^2323%&	232,000		C,H,K,M,V	F	A, B	DAL
M8340103^2373%&	237,000		C,H,K,M,V	F	A, B	DAL
	Resistance	Power	Char.	Res.		
Part Number	Value (Ohms)	Rating	(^)	Tolerance	Schematic	Manufacturer
M8340103^2403%&	240,000		C,H,K,M,V	F, G, J	A, B	DAL
M8340103^2433%&	243,000	See PN Ordering Section	C,H,K,M,V	F	A, B	DAL
M8340103^2493%&	249,000		C,H,K,M,V	F	A, B	DAL
M8340103^2553%&	255,000		C,H,K,M,V	F	A, B	DAL
M8340103^2613%&	261,000		C,H,K,M,V	F	A, B	DAL

M8340103^2673%&	267,000		C,H,K,M,V	F	A, B	DAL
M8340103^2703%&	270,000		C,H,K,M,V	G, J	A, B	DAL
M8340103^2743%&	274,000		C,H,K,M,V	F	A, B	DAL
M8340103^2803%&	280,000		C,H,K,M,V	F	A, B	DAL
M8340103^2873%&	287,000	See PN Ordering Section	C,H,K,M,V	F	A, B	DAL
M8340103^2943%&	294,000		C,H,K,M,V	F	A, B	DAL
M8340103^3003%&	300,000		C,H,K,M,V	G, J	A, B	DAL
M8340103^3013%&	301,000	See PN Ordering Section	C,H,K,M,V	F	A, B	DAL
M8340103^3093%&	309,000		C,H,K,M,V	F	A, B	DAL
	Resistance	Power	Char.	Res.		
Part Number	Value (Ohms)	Rating	(^)	Tolerance	Schematic	Manufacturer
M8340103^3163%&	316,000		C,H,K,M,V	F	A, B	DAL
M8340103^3243%&	324,000		C,H,K,M,V	F	A, B	DAL
M8340103^3303%&	330,000		C,H,K,M,V	G, J	A, B	DAL
M8340103^3323%&	332,000		C,H,K,M,V	F	A, B	DAL
M8340103^3403%&	340,000		C,H,K,M,V	F	A, B	DAL
M8340103^3483%&	348,000		C,H,K,M,V	F	A, B	DAL
M8340103^3573%&	357,000	See PN Ordering Section	C,H,K,M,V	F	A, B	DAL
M8340103^3603%&	360,000		C,H,K,M,V	G, J	A, B	DAL
M8340103^3653%&	365,000		C,H,K,M,V	F	A, B	DAL
M8340103^3743%&	374,000	See PN Ordering Section	C,H,K,M,V	F	A, B	DAL
M8340103^3833%&	383,000		C,H,K,M,V	F	A, B	DAL
M8340103^3903%&	390,000		C,H,K,M,V	G, J	A, B	DAL
M8340103^3923%&	392,000	See PN Ordering Section	C,H,K,M,V	F	A, B	DAL
M8340103^4023%&	402,000		C,H,K,M,V	F	A, B	DAL
	Resistance	Power	Char.	Res.		
Part Number	Value (Ohms)	Rating	(^)	Tolerance	Schematic	Manufacturer
M8340103^4123%&	412,000		C,H,K,M,V	F	A, B	DAL
M8340103^4223%&	422,000		C,H,K,M,V	F	A, B	DAL
M8340103^4303%&	430,000		C,H,K,M,V	G, J	A, B	DAL
M8340103^4323%&	432,000		C,H,K,M,V	F	A, B	DAL
M8340103^4423%&	442,000		C,H,K,M,V	F	A, B	DAL
M8340103^4533%&	453,000		C,H,K,M,V	F	A, B	DAL
M8340103^4643%&	464,000	See PN Ordering Section	C,H,K,M,V	F	A, B	DAL
M8340103^4703%&	470,000		C,H,K,M,V	G, J	A, B	DAL
M8340103^4753%&	475,000		C,H,K,M,V	F	A, B	DAL
M8340103^4873%&	487,000		C,H,K,M,V	F	A, B	DAL
M8340103^4993%&	499,000		C,H,K,M,V	F	A, B	DAL
M8340103^5103%&	510,000		C,H,K,M,V	G, J	A, B	DAL
M8340103^5113%&	511,000		C,H,K,M,V	F	A, B	DAL
M8340103^5233%&	523,000		C,H,K,M,V	F	A, B	DAL
	Resistance	Power	Char.	Res.		
Part Number	Value (Ohms)	Rating	(^)	Tolerance	Schematic	Manufacturer
M8340103^5363%&	536,000		C,H,K,M,V	F	A, B	DAL
M8340103^5493%&	549,000	See PN Ordering Section	C,H,K,M,V	F	A, B	DAL
M8340103^5603%&	560,000		C,H,K,M,V	G, J	A, B	DAL
M8340103^5623%&	562,000		C,H,K,M,V	F	A, B	DAL

M8340103^5763%&	576,000	See PN Ordering Section	C,H,K,M,V	F	A, B	DAL
M8340103^5903%&	590,000		C,H,K,M,V	F	A, B	DAL
M8340103^6043%&	604,000		C,H,K,M,V	F	A, B	DAL
M8340103^6193%&	619,000		C,H,K,M,V	F	A, B	DAL
M8340103^6203%&	620,000		C,H,K,M,V	G, J	A, B	DAL
M8340103^6343%&	634,000		C,H,K,M,V	F	A, B	DAL
M8340103^6493%&	649,000		C,H,K,M,V	F	A, B	DAL
M8340103^6653%&	665,000		C,H,K,M,V	F	A, B	DAL
M8340103^6803%&	680,000	See PN Ordering Section	C,H,K,M,V	G, J	A, B	DAL
M8340103^6813%&	681,000		C,H,K,M,V	F	A, B	DAL
	Resistance	Power	Char.	Res.		
Part Number	Value (Ohms)	Rating	(^)	Tolerance	Schematic	Manufacturer
M8340103^6983%&	698,000		C,H,K,M,V	F	A, B	DAL
M8340103^7153%&	715,000	See PN Ordering Section	C,H,K,M,V	F	A, B	DAL
M8340103^7323%&	732,000		C,H,K,M,V	F	A, B	DAL
M8340103^7503%&	750,000		C,H,K,M,V	F, G, J	A, B	DAL
M8340103^7683%&	768,000		C,H,K,M,V	F	A, B	DAL
M8340103^7873%&	787,000		C,H,K,M,V	F	A, B	DAL
M8340103^8063%&	806,000	See PN Ordering Section	C,H,K,M,V	F	A, B	DAL
M8340103^8203%&	820,000		C,H,K,M,V	G, J	A, B	DAL
M8340103^8253%&	825,000		C,H,K,M,V	F	A, B	DAL
M8340103^8453%&	845,000	See PN Ordering Section	C,H,K,M,V	F	A, B	DAL
M8340103^8663%&	866,000		C,H,K,M,V	F	A, B	DAL
M8340103^8873%&	887,000		C,H,K,M,V	F	A, B	DAL
M8340103^9093%&	909,000		C,H,K,M,V	F	A, B	DAL
M8340103^9103%&	910,000		C,H,K,M,V	G, J	A, B	DAL
	Resistance	Power	Char.	Res.		
Part Number	Value (Ohms)	Rating	(^)	Tolerance	Schematic	Manufacturer
M8340103^9313%&	931,000		C,H,K,M,V	F	A, B	DAL
M8340103^9533%&	953,000		C,H,K,M,V	F	A, B	DAL
M8340103^9763%&	976,000		C,H,K,M,V	F	A, B	DAL
M8340103^1004%&	1,000,000	See PN Ordering Section	C,H,K,M,V	F, G, J	A, B	DAL
	Resistance	Power	Char.	Res.		
Part Number	Value (Ohms)	Rating	(^)	Tolerance	Schematic	Manufacturer

MIL-PRF-83401/7 (RZ070) Film Resistor Networks

10.0 Ohms Through 1,000,000 Ohms

	Resistance	Power	Char.	Res.		
Part Number	Value (Ohms)	Rating	(^)	Tolerance	Schematic	Manufacturer
M8340107^10R0%&	10.0	Link at Top	C,H,K,M,V	F, G, J	C, G	DAL2
M8340107^10R2%&	10.2		C,H,K,M,V	F	C, G	DAL2
M8340107^10R5%&	10.5		C,H,K,M,V	F	C, G	DAL2
M8340107^10R7%&	10.7		C,H,K,M,V	F	C, G	DAL2
M8340107^11R0%&	11.0		C,H,K,M,V	F, G, J	C, G	DAL2

M8340107^11R3%&	11.3	Link at Top	C,H,K,M,V	F	C, G	DAL2
M8340107^11R5%&	11.5		C,H,K,M,V	F	C, G	DAL2
M8340107^11R8%&	11.8		C,H,K,M,V	F	C, G	DAL2
M8340107^12R0%&	12.0		C,H,K,M,V	F, G, J	C, G	DAL2
M8340107^12R1%&	12.1		C,H,K,M,V	F	C, G	DAL2
M8340107^12R4%&	12.4	Link at Top	C,H,K,M,V	F	C, G	DAL2
M8340107^12R7%&	12.7		C,H,K,M,V	F	C, G	DAL2
M8340107^13R0%&	13.0		C,H,K,M,V	F, G, J	C, G	DAL2
M8340107^13R3%&	13.3		C,H,K,M,V	F	C, G	DAL2
M8340107^13R7%&	13.7		C,H,K,M,V	F	C, G	DAL2
M8340107^14R0%&	14.0	Link at Top	C,H,K,M,V	F	C, G	DAL2
M8340107^14R3%&	14.3		C,H,K,M,V	F	C, G	DAL2
M8340107^14R7%&	14.7		C,H,K,M,V	F	C, G	DAL2
M8340107^15R0%&	15.0		C,H,K,M,V	F, G, J	C, G	DAL2
M8340107^15R4%&	15.4		C,H,K,M,V	F	C, G	DAL2
M8340107^15R8%&	15.8	Link at Top	C,H,K,M,V	F	C, G	DAL2
M8340107^16R0%&	16.0		C,H,K,M,V	G, J	C, G	DAL2
M8340107^16R2%&	16.2		C,H,K,M,V	F	C, G	DAL2
M8340107^16R5%&	16.5		C,H,K,M,V	F	C, G	DAL2
M8340107^16R9%&	16.9		C,H,K,M,V	F	C, G	DAL2
M8340107^17R4%&	17.4	Link at Top	C,H,K,M,V	F	C, G	DAL2
M8340107^17R8%&	17.8		C,H,K,M,V	F	C, G	DAL2
M8340107^18R0%&	18.0		C,H,K,M,V	G, J	C, G	DAL2
M8340107^18R2%&	18.2		C,H,K,M,V	F	C, G	DAL2
M8340107^18R7%&	18.7		C,H,K,M,V	F	C, G	DAL2
M8340107^19R1%&	19.1	Link at Top	C,H,K,M,V	F	C, G	DAL2
M8340107^19R6%&	19.6		C,H,K,M,V	F	C, G	DAL2
M8340107^20R0%&	20.0		C,H,K,M,V	F, G, J	C, G	DAL2
M8340107^20R5%&	20.5		C,H,K,M,V	F	C, G	DAL2
M8340107^21R0%&	21.0		C,H,K,M,V	F	C, G	DAL2
M8340107^21R5%&	21.5	Link at Top	C,H,K,M,V	F	C, G	DAL2
M8340107^22R0%&	22.0		C,H,K,M,V	G, J	C, G	DAL2
M8340107^22R1%&	22.1		C,H,K,M,V	F	C, G	DAL2
M8340107^22R6%&	22.6		C,H,K,M,V	F	C, G	DAL2
M8340107^23R2%&	23.2		C,H,K,M,V	F	C, G	DAL2
M8340107^23R7%&	23.7	Link at Top	C,H,K,M,V	F	C, G	DAL2
M8340107^24R0%&	24.0		C,H,K,M,V	F, G, J	C, G	DAL2
M8340107^24R3%&	24.3		C,H,K,M,V	F	C, G	DAL2
M8340107^24R9%&	24.9		C,H,K,M,V	F	C, G	DAL2
M8340107^25R5%&	25.5		C,H,K,M,V	F	C, G	DAL2
M8340107^26R1%&	26.1	Link at Top	C,H,K,M,V	F	C, G	DAL2
M8340107^26R7%&	26.7		C,H,K,M,V	F	C, G	DAL2
M8340107^27R0%&	27.0		C,H,K,M,V	G, J	C, G	DAL2,TEC
M8340107^27R4%&	27.4		C,H,K,M,V	F	C, G	DAL2,TEC
M8340107^28R0%&	28.0		C,H,K,M,V	F	C, G	DAL2,TEC
M8340107^28R7%&	28.7	Link at Top	C,H,K,M,V	F	C, G	DAL2,TEC
M8340107^29R4%&	29.4		C,H,K,M,V	F	C, G	DAL2,TEC

M8340107^30R0%&	30.0		C,H,K,M,V	G, J	C, G	DAL2,TEC
M8340107^30R1%&	30.1		C,H,K,M,V	F	C, G	DAL2,TEC
M8340107^30R9%&	30.9		C,H,K,M,V	F	C, G	DAL2,TEC
M8340107^31R6%&	31.6	Link at Top	C,H,K,M,V	F	C, G	DAL2,TEC
M8340107^32R4%&	32.4		C,H,K,M,V	F	C, G	DAL2,TEC
M8340107^33R0%&	33.0		C,H,K,M,V	G, J	C, G	DAL2,TEC
M8340107^33R2%&	33.2		C,H,K,M,V	F	C, G	DAL2,TEC
M8340107^34R0%&	34.0		C,H,K,M,V	F	C, G	DAL2,TEC
M8340107^34R8%&	34.8	Link at Top	C,H,K,M,V	F	C, G	DAL2,TEC
M8340107^35R7%&	35.7		C,H,K,M,V	F	C, G	DAL2,TEC
M8340107^36R0%&	36.0		C,H,K,M,V	G, J	C, G	DAL2,TEC
M8340107^36R5%&	36.5		C,H,K,M,V	F	C, G	DAL2,TEC
M8340107^37R4%&	37.4		C,H,K,M,V	F	C, G	DAL2,TEC
M8340107^38R3%&	38.3	Link at Top	C,H,K,M,V	F	C, G	DAL2,TEC
M8340107^39R0%&	39.0		C,H,K,M,V	G, J	C, G	DAL2,TEC
M8340107^39R2%&	39.2		C,H,K,M,V	F	C, G	DAL2,TEC
M8340107^40R2%&	40.2		C,H,K,M,V	F	C, G	DAL2,TEC
M8340107^41R2%&	41.2		C,H,K,M,V	F	C, G	DAL2,TEC
M8340107^42R2%&	42.2	Link at Top	C,H,K,M,V	F	C, G	DAL2,TEC
M8340107^43R0%&	43.0		C,H,K,M,V	G, J	C, G	DAL2,TEC
M8340107^43R2%&	43.2		C,H,K,M,V	F	C, G	DAL2,TEC
M8340107^44R2%&	44.2		C,H,K,M,V	F	C, G	DAL2,TEC
M8340107^45R3%&	45.3		C,H,K,M,V	F	C, G	DAL2,TEC
M8340107^46R4%&	46.4	Link at Top	C,H,K,M,V	F	C, G	DAL2,TEC
M8340107^47R0%&	47.0		C,H,K,M,V	G, J	C, G	DAL2,TEC
M8340107^47R5%&	47.5		C,H,K,M,V	F	C, G	DAL2,TEC
M8340107^48R7%&	48.7		C,H,K,M,V	F	C, G	DAL2,TEC
M8340107^49R9%&	49.9		C,H,K,M,V	F	C, G	DAL2,TEC
M8340107^51R0%&	51.0	Link at Top	C,H,K,M,V	G, J	C, G	DAL2,TEC
M8340107^51R1%&	51.1		C,H,K,M,V	F	C, G	DAL2,TEC
M8340107^52R3%&	52.3		C,H,K,M,V	F	C, G	DAL2,TEC
M8340107^53R6%&	53.6		C,H,K,M,V	F	C, G	DAL2,TEC
M8340107^54R9%&	54.9		C,H,K,M,V	F	C, G	DAL2,TEC
M8340107^56R0%&	56.0	Link at Top	C,H,K,M,V	G, J	C, G	DAL2,TEC
M8340107^56R2%&	56.2		C,H,K,M,V	F	C, G	DAL2,TEC
M8340107^57R6%&	57.6		C,H,K,M,V	F	C, G	DAL2,TEC
M8340107^59R0%&	59.0		C,H,K,M,V	F	C, G	DAL2,TEC
M8340107^60R4%&	60.4		C,H,K,M,V	F	C, G	DAL2,TEC
M8340107^61R9%&	61.9	Link at Top	C,H,K,M,V	F	C, G	DAL2,TEC
M8340107^62R0%&	62.0		C,H,K,M,V	G, J	C, G	DAL2,TEC
M8340107^63R4%&	63.4		C,H,K,M,V	F	C, G	DAL2,TEC
M8340107^64R9%&	64.9		C,H,K,M,V	F	C, G	DAL2,TEC
M8340107^66R5%&	66.5		C,H,K,M,V	F	C, G	DAL2,TEC
M8340107^68R0%&	68.0	Link at Top	C,H,K,M,V	G, J	C, G	DAL2,TEC
M8340107^68R1%&	68.1		C,H,K,M,V	F	C, G	DAL2,TEC
M8340107^69R8%&	69.8		C,H,K,M,V	F	C, G	DAL2,TEC
M8340107^71R5%&	71.5		C,H,K,M,V	F	C, G	DAL2,TEC

M8340107^73R2%&	73.2		C,H,K,M,V	F	C, G	DAL2,TEC
M8340107^75R0%&	75.0	Link at Top	C,H,K,M,V	F, G, J	C, G	DAL2,TEC
M8340107^76R8%&	76.8		C,H,K,M,V	F	C, G	DAL2,TEC
M8340107^78R7%&	78.7		C,H,K,M,V	F	C, G	DAL2,TEC
M8340107^80R6%&	80.6		C,H,K,M,V	F	C, G	DAL2,TEC
M8340107^82R0%&	82.0		C,H,K,M,V	G, J	C, G	DAL2,TEC
M8340107^82R5%&	82.5	Link at Top	C,H,K,M,V	F	C, G	DAL2,TEC
M8340107^84R5%&	84.5		C,H,K,M,V	F	C, G	DAL2,TEC
M8340107^86R6%&	86.6		C,H,K,M,V	F	C, G	DAL2,TEC
M8340107^88R7%&	88.7		C,H,K,M,V	F	C, G	DAL2,TEC
M8340107^90R9%&	90.9		C,H,K,M,V	F	C, G	DAL2,TEC
M8340107^91R0%&	91.0	Link at Top	C,H,K,M,V	G, J	C, G	DAL2,TEC
M8340107^93R1%&	93.1		C,H,K,M,V	F	C, G	DAL2,TEC
M8340107^95R3%&	95.3		C,H,K,M,V	F	C, G	DAL2,TEC
M8340107^97R6%&	97.6		C,H,K,M,V	F	C, G	DAL2,TEC
M8340107^1000%&	100		C,H,K,M,V	B, D, F, G, J	C, G	DAL2,IRC2,TEC
M8340107^1010%&	101	Link at Top	C,H,K,M,V	B, D	C, G	DAL2,IRC2,TEC
M8340107^1020%&	102		C,H,K,M,V	B, D, F	C, G	DAL2,IRC2,TEC
M8340107^1040%&	104		C,H,K,M,V	B, D	C, G	DAL2,IRC2,TEC
M8340107^1050%&	105		C,H,K,M,V	B, D, F	C, G	DAL2,IRC2,TEC
M8340107^1060%&	106		C,H,K,M,V	B, D	C, G	DAL2,IRC2,TEC
M8340107^1070%&	107	Link at Top	C,H,K,M,V	B, D, F	C, G	DAL2,IRC2,TEC
M8340107^1090%&	109		C,H,K,M,V	B, D	C, G	DAL2,IRC2,TEC
M8340107^1100%&	110		C,H,K,M,V	B, D, F, G, J	C, G	DAL2,IRC2,TEC
M8340107^1110%&	111		C,H,K,M,V	B, D	C, G	DAL2,IRC2,TEC
M8340107^1130%&	113		C,H,K,M,V	B, D, F	C, G	DAL2,IRC2,TEC
M8340107^1140%&	114	Link at Top	C,H,K,M,V	B, D	C, G	DAL2,IRC2,TEC
M8340107^1150%&	115		C,H,K,M,V	B, D, F	C, G	DAL2,IRC2,TEC
M8340107^1170%&	117		C,H,K,M,V	B, D	C, G	DAL2,IRC2,TEC
M8340107^1180%&	118		C,H,K,M,V	B, D, F	C, G	DAL2,IRC2,TEC
M8340107^1200%&	120		C,H,K,M,V	B, D, F, G, J	C, G	DAL2,IRC2,TEC
M8340107^1210%&	121	Link at Top	C,H,K,M,V	B, D, F	C, G	DAL2,IRC2,TEC
M8340107^1230%&	123		C,H,K,M,V	B, D	C, G	DAL2,IRC2,TEC
M8340107^1240%&	124		C,H,K,M,V	B, D, F	C, G	DAL2,IRC2,TEC
M8340107^1260%&	126		C,H,K,M,V	B, D	C, G	DAL2,IRC2,TEC
M8340107^1270%&	127		C,H,K,M,V	B, D, F	C, G	DAL2,IRC2,TEC
M8340107^1290%&	129	Link at Top	C,H,K,M,V	B, D	C, G	DAL2,IRC2,TEC
M8340107^1300%&	130		C,H,K,M,V	B, D, F, G, J	C, G	DAL2,IRC2,TEC
M8340107^1320%&	132		C,H,K,M,V	B, D	C, G	DAL2,IRC2,TEC
M8340107^1330%&	133		C,H,K,M,V	B, D, F	C, G	DAL2,IRC2,TEC
M8340107^1350%&	135	Link at Top	C,H,K,M,V	B, D	C, G	DAL2,IRC2,TEC
M8340107^1370%&	137		C,H,K,M,V	B, D, F	C, G	DAL2,IRC2,TEC
M8340107^1380%&	138		C,H,K,M,V	B, D	C, G	DAL2,IRC2,TEC
M8340107^1400%&	140		C,H,K,M,V	B, D, F	C, G	DAL2,IRC2,TEC
M8340107^1420%&	142		C,H,K,M,V	B, D	C, G	DAL2,IRC2,TEC
M8340107^1430%&	143	Link at Top	C,H,K,M,V	B, D, F	C, G	DAL2,IRC2,TEC
M8340107^1450%&	145		C,H,K,M,V	B, D	C, G	DAL2,IRC2,TEC

M8340107^1470%&	147		C,H,K,M,V	B, D, F	C, G	DAL2,IRC2,TEC
M8340107^1490%&	149		C,H,K,M,V	B, D	C, G	DAL2,IRC2,TEC
M8340107^1500%&	150		C,H,K,M,V	B, D, F, G, J	C, G	DAL2,IRC2,TEC
M8340107^1520%&	152	Link at Top	C,H,K,M,V	B, D	C, G	DAL2,IRC2,TEC
M8340107^1540%&	154		C,H,K,M,V	B, D, F	C, G	DAL2,IRC2,TEC
M8340107^1560%&	156		C,H,K,M,V	B, D	C, G	DAL2,IRC2,TEC
M8340107^1580%&	158		C,H,K,M,V	B, D, F	C, G	DAL2,IRC2,TEC
M8340107^1600%&	160		C,H,K,M,V	B, D, G, J	C, G	DAL2,IRC2,TEC
M8340107^1620%&	162	Link at Top	C,H,K,M,V	B, D, F	C, G	DAL2,IRC2,TEC
M8340107^1640%&	164		C,H,K,M,V	B, D	C, G	DAL2,IRC2,TEC
M8340107^1650%&	165		C,H,K,M,V	B, D, F	C, G	DAL2,IRC2,TEC
M8340107^1670%&	167		C,H,K,M,V	B, D	C, G	DAL2,IRC2,TEC
M8340107^1690%&	169		C,H,K,M,V	B, D, F	C, G	DAL2,IRC2,TEC
M8340107^1720%&	172	Link at Top	C,H,K,M,V	B, D	C, G	DAL2,IRC2,TEC
M8340107^1740%&	174		C,H,K,M,V	B, D, F	C, G	DAL2,IRC2,TEC
M8340107^1760%&	176		C,H,K,M,V	B, D	C, G	DAL2,IRC2,TEC
M8340107^1780%&	178		C,H,K,M,V	B, D, F	C, G	DAL2,IRC2,TEC
M8340107^1800%&	180		C,H,K,M,V	B, D, G, J	C, G	DAL2,IRC2,TEC
M8340107^1820%&	182	Link at Top	C,H,K,M,V	B, D, F	C, G	DAL2,IRC2,TEC
M8340107^1840%&	184		C,H,K,M,V	B, D	C, G	DAL2,IRC2,TEC
M8340107^1870%&	187		C,H,K,M,V	B, D, F	C, G	DAL2,IRC2,TEC
M8340107^1890%&	189		C,H,K,M,V	B, D	C, G	DAL2,IRC2,TEC
M8340107^1910%&	191		C,H,K,M,V	B, D, F	C, G	DAL2,IRC2,TEC
M8340107^1930%&	193	Link at Top	C,H,K,M,V	B, D	C, G	DAL2,IRC2,TEC
M8340107^1960%&	196		C,H,K,M,V	B, D, F	C, G	DAL2,IRC2,TEC
M8340107^1980%&	198		C,H,K,M,V	B, D	C, G	DAL2,IRC2,TEC
M8340107^2000%&	200		C,H,K,M,V	B, D, F, G, J	C, G	DAL2,IRC2,TEC
M8340107^2030%&	203		C,H,K,M,V	B, D	C, G	DAL2,IRC2,TEC
M8340107^2050%&	205	Link at Top	C,H,K,M,V	B, D, F	C, G	DAL2,IRC2,TEC
M8340107^2080%&	208		C,H,K,M,V	B, D	C, G	DAL2,IRC2,TEC
M8340107^2100%&	210		C,H,K,M,V	B, D, F	C, G	DAL2,IRC2,TEC
M8340107^2130%&	213		C,H,K,M,V	B, D	C, G	DAL2,IRC2,TEC
M8340107^2150%&	215		C,H,K,M,V	B, D, F	C, G	DAL2,IRC2,TEC
M8340107^2180%&	218	Link at Top	C,H,K,M,V	B, D	C, G	DAL2,IRC2,TEC
M8340107^2200%&	220		C,H,K,M,V	G, J	C, G	DAL2,IRC2,TEC
M8340107^2210%&	221		C,H,K,M,V	B, D, F	C, G	DAL2,IRC2,TEC
M8340107^2230%&	223		C,H,K,M,V	B, D	C, G	DAL2,IRC2,TEC
M8340107^2260%&	226		C,H,K,M,V	B, D, F	C, G	DAL2,IRC2,TEC
M8340107^2290%&	229	Link at Top	C,H,K,M,V	B, D	C, G	DAL2,IRC2,TEC
M8340107^2320%&	232		C,H,K,M,V	B, D, F	C, G	DAL2,IRC2,TEC
M8340107^2340%&	234		C,H,K,M,V	B, D	C, G	DAL2,IRC2,TEC
M8340107^2370%&	237		C,H,K,M,V	B, D, F	C, G	DAL2,IRC2,TEC
M8340107^2400%&	240		C,H,K,M,V	B, D, F, G, J	C, G	DAL2,IRC2,TEC
M8340107^2430%&	243	Link at Top	C,H,K,M,V	B, D, F	C, G	DAL2,IRC2,TEC
M8340107^2460%&	246		C,H,K,M,V	B, D	C, G	DAL2,IRC2,TEC
M8340107^2490%&	249		C,H,K,M,V	B, D, F	C, G	DAL2,IRC2,TEC
M8340107^2520%&	252		C,H,K,M,V	B, D	C, G	DAL2,IRC2,TEC

M8340107^2550%&	255		C,H,K,M,V	B, D, F	C, G	DAL2,IRC2,TEC
M8340107^2580%&	258	Link at Top	C,H,K,M,V	B, D	C, G	DAL2,IRC2,TEC
M8340107^2610%&	261		C,H,K,M,V	B, D, F	C, G	DAL2,IRC2,TEC
M8340107^2640%&	264		C,H,K,M,V	B, D	C, G	DAL2,IRC2,TEC
M8340107^2670%&	267		C,H,K,M,V	B, D, F	C, G	DAL2,IRC2,TEC
M8340107^2700%&	270		C,H,K,M,V	G, J	C, G	DAL2,IRC2,TEC
M8340107^2710%&	271	Link at Top	C,H,K,M,V	B, D	C, G	DAL2,IRC2,TEC
M8340107^2740%&	274		C,H,K,M,V	B, D, F	C, G	DAL2,IRC2,TEC
M8340107^2770%&	277		C,H,K,M,V	B, D	C, G	DAL2,IRC2,TEC
M8340107^2800%&	280		C,H,K,M,V	B, D, F	C, G	DAL2,IRC2,TEC
M8340107^2840%&	284		C,H,K,M,V	B, D	C, G	DAL2,IRC2,TEC
M8340107^2870%&	287	Link at Top	C,H,K,M,V	B, D, F	C, G	DAL2,IRC2,TEC
M8340107^2910%&	291		C,H,K,M,V	B, D	C, G	DAL2,IRC2,TEC
M8340107^2940%&	294		C,H,K,M,V	B, D, F	C, G	DAL2,IRC2,TEC
M8340107^2980%&	298		C,H,K,M,V	B, D	C, G	DAL2,IRC2,TEC
M8340107^3000%&	300		C,H,K,M,V	G, J	C, G	DAL2,IRC2,TEC
M8340107^3010%&	301	Link at Top	C,H,K,M,V	B, D, F	C, G	DAL2,IRC2,TEC
M8340107^3050%&	305		C,H,K,M,V	B, D	C, G	DAL2,IRC2,TEC
M8340107^3090%&	309		C,H,K,M,V	B, D, F	C, G	DAL2,IRC2,TEC
M8340107^3120%&	312		C,H,K,M,V	B, D	C, G	DAL2,IRC2,TEC
M8340107^3160%&	316		C,H,K,M,V	B, D, F	C, G	DAL2,IRC2,TEC
M8340107^3200%&	320	Link at Top	C,H,K,M,V	B, D	C, G	DAL2,IRC2,TEC
M8340107^3240%&	324		C,H,K,M,V	B, D, F	C, G	DAL2,IRC2,TEC
M8340107^3280%&	328		C,H,K,M,V	B, D	C, G	DAL2,IRC2,TEC
M8340107^3300%&	330		C,H,K,M,V	G, J	C, G	DAL2,IRC2,TEC
M8340107^3320%&	332		C,H,K,M,V	B, D, F	C, G	DAL2,IRC2,TEC
M8340107^3360%&	336	Link at Top	C,H,K,M,V	B, D	C, G	DAL2,IRC2,TEC
M8340107^3400%&	340		C,H,K,M,V	B, D, F	C, G	DAL2,IRC2,TEC
M8340107^3440%&	344		C,H,K,M,V	B, D	C, G	DAL2,IRC2,TEC
M8340107^3480%&	348		C,H,K,M,V	B, D, F	C, G	DAL2,IRC2,TEC
M8340107^3520%&	352		C,H,K,M,V	B, D	C, G	DAL2,IRC2,TEC
M8340107^3570%&	357	Link at Top	C,H,K,M,V	B, D, F	C, G	DAL2,IRC2,TEC
M8340107^3600%&	360		C,H,K,M,V	G, J	C, G	DAL2,IRC2,TEC
M8340107^3610%&	361		C,H,K,M,V	B, D	C, G	DAL2,IRC2,TEC
M8340107^3650%&	365		C,H,K,M,V	B, D, F	C, G	DAL2,IRC2,TEC
M8340107^3700%&	370		C,H,K,M,V	B, D	C, G	DAL2,IRC2,TEC
M8340107^3740%&	374	Link at Top	C,H,K,M,V	B, D, F	C, G	DAL2,IRC2,TEC
M8340107^3790%&	379		C,H,K,M,V	B, D	C, G	DAL2,IRC2,TEC
M8340107^3830%&	383		C,H,K,M,V	B, D, F	C, G	DAL2,IRC2,TEC
M8340107^3880%&	388		C,H,K,M,V	B, D	C, G	DAL2,IRC2,TEC
M8340107^3900%&	390		C,H,K,M,V	G, J	C, G	DAL2,IRC2,TEC
M8340107^3920%&	392	Link at Top	C,H,K,M,V	B, D, F	C, G	DAL2,IRC2,TEC
M8340107^3970%&	397		C,H,K,M,V	B, D	C, G	DAL2,IRC2,TEC
M8340107^4020%&	402		C,H,K,M,V	B, D, F	C, G	DAL2,IRC2,TEC
M8340107^4070%&	407		C,H,K,M,V	B, D	C, G	DAL2,IRC2,TEC
M8340107^4120%&	412		C,H,K,M,V	B, D, F	C, G	DAL2,IRC2,TEC
M8340107^4170%&	417	Link at Top	C,H,K,M,V	B, D	C, G	DAL2,IRC2,TEC

M8340107^4220%&	422		C,H,K,M,V	B, D, F	C, G	DAL2,IRC2,TEC
M8340107^4270%&	427		C,H,K,M,V	B, D	C, G	DAL2,IRC2,TEC
M8340107^4300%&	430		C,H,K,M,V	G, J	C, G	DAL2,IRC2,TEC
M8340107^4320%&	432		C,H,K,M,V	B, D, F	C, G	DAL2,IRC2,TEC
M8340107^4370%&	437	Link at Top	C,H,K,M,V	B, D	C, G	DAL2,IRC2,TEC
M8340107^4420%&	442		C,H,K,M,V	B, D, F	C, G	DAL2,IRC2,TEC
M8340107^4480%&	448		C,H,K,M,V	B, D	C, G	DAL2,IRC2,TEC
M8340107^4530%&	453		C,H,K,M,V	B, D, F	C, G	DAL2,IRC2,TEC
M8340107^4590%&	459		C,H,K,M,V	B, D	C, G	DAL2,IRC2,TEC
M8340107^4640%&	464	Link at Top	C,H,K,M,V	B, D, F	C, G	DAL2,IRC2,TEC
M8340107^4700%&	470		C,H,K,M,V	B, D, G, J	C, G	DAL2,IRC2,TEC
M8340107^4750%&	475		C,H,K,M,V	B, D, F	C, G	DAL2,IRC2,TEC
M8340107^4810%&	481		C,H,K,M,V	B, D	C, G	DAL2,IRC2,TEC
M8340107^4870%&	487		C,H,K,M,V	B, D, F	C, G	DAL2,IRC2,TEC
M8340107^4930%&	493	Link at Top	C,H,K,M,V	B, D	C, G	DAL2,IRC2,TEC
M8340107^4990%&	499		C,H,K,M,V	B, D, F	C, G	DAL2,IRC2,TEC
M8340107^5050%&	505		C,H,K,M,V	B, D	C, G	DAL2,IRC2,TEC
M8340107^5100%&	510		C,H,K,M,V	G, J	C, G	DAL2,IRC2,TEC
M8340107^5110%&	511		C,H,K,M,V	B, D, F	C, G	DAL2,IRC2,TEC
M8340107^5170%&	517	Link at Top	C,H,K,M,V	B, D	C, G	DAL2,IRC2,TEC
M8340107^5230%&	523		C,H,K,M,V	B, D, F	C, G	DAL2,IRC2,TEC
M8340107^5300%&	530		C,H,K,M,V	B, D	C, G	DAL2,IRC2,TEC
M8340107^5360%&	536		C,H,K,M,V	B, D, F	C, G	DAL2,IRC2,TEC
M8340107^5420%&	542		C,H,K,M,V	B, D	C, G	DAL2,IRC2,TEC
M8340107^5490%&	549	Link at Top	C,H,K,M,V	B, D, F	C, G	DAL2,IRC2,TEC
M8340107^5560%&	556		C,H,K,M,V	B, D	C, G	DAL2,IRC2,TEC
M8340107^5600%&	560		C,H,K,M,V	G, J	C, G	DAL2,IRC2,TEC
M8340107^5620%&	562		C,H,K,M,V	B, D, F	C, G	DAL2,IRC2,TEC
M8340107^5690%&	569		C,H,K,M,V	B, D	C, G	DAL2,IRC2,TEC
M8340107^5760%&	576	Link at Top	C,H,K,M,V	B, D, F	C, G	DAL2,IRC2,TEC
M8340107^5830%&	583		C,H,K,M,V	B, D	C, G	DAL2,IRC2,TEC
M8340107^5900%&	590		C,H,K,M,V	B, D, F	C, G	DAL2,IRC2,TEC
M8340107^5970%&	597		C,H,K,M,V	B, D	C, G	DAL2,IRC2,TEC
M8340107^6040%&	604		C,H,K,M,V	B, D, F	C, G	DAL2,IRC2,TEC
M8340107^6120%&	612	Link at Top	C,H,K,M,V	B, D	C, G	DAL2,IRC2,TEC
M8340107^6190%&	619		C,H,K,M,V	B, D, F	C, G	DAL2,IRC2,TEC
M8340107^6200%&	620		C,H,K,M,V	G, J	C, G	DAL2,IRC2,TEC
M8340107^6260%&	626		C,H,K,M,V	B, D	C, G	DAL2,IRC2,TEC
M8340107^6340%&	634		C,H,K,M,V	B, D, F	C, G	DAL2,IRC2,TEC
M8340107^6420%&	642	Link at Top	C,H,K,M,V	B, D	C, G	DAL2,IRC2,TEC
M8340107^6490%&	649		C,H,K,M,V	B, D, F	C, G	DAL2,IRC2,TEC
M8340107^6570%&	657		C,H,K,M,V	B, D	C, G	DAL2,IRC2,TEC
M8340107^6650%&	665		C,H,K,M,V	B, D, F	C, G	DAL2,IRC2,TEC
M8340107^6730%&	673		C,H,K,M,V	B, D	C, G	DAL2,IRC2,TEC
M8340107^6800%&	680	Link at Top	C,H,K,M,V	G, J	C, G	DAL2,IRC2,TEC
M8340107^6810%&	681		C,H,K,M,V	B, D, F	C, G	DAL2,IRC2,TEC
M8340107^6900%&	690		C,H,K,M,V	B, D	C, G	DAL2,IRC2,TEC

M8340107^6980%&	698		C,H,K,M,V	B, D, F	C, G	DAL2,IRC2,TEC
M8340107^7060%&	706		C,H,K,M,V	B, D	C, G	DAL2,IRC2,TEC
M8340107^7150%&	715	Link at Top	C,H,K,M,V	B, D, F	C, G	DAL2,IRC2,TEC
M8340107^7230%&	723		C,H,K,M,V	B, D	C, G	DAL2,IRC2,TEC
M8340107^7320%&	732		C,H,K,M,V	B, D, F	C, G	DAL2,IRC2,TEC
M8340107^7410%&	741		C,H,K,M,V	B, D	C, G	DAL2,IRC2,TEC
M8340107^7500%&	750		C,H,K,M,V	B, D, F, G, J	C, G	DAL2,IRC2,TEC
M8340107^7590%&	759	Link at Top	C,H,K,M,V	B, D	C, G	DAL2,IRC2,TEC
M8340107^7680%&	768		C,H,K,M,V	B, D, F	C, G	DAL2,IRC2,TEC
M8340107^7770%&	777		C,H,K,M,V	B, D	C, G	DAL2,IRC2,TEC
M8340107^7870%&	787		C,H,K,M,V	B, D, F	C, G	DAL2,IRC2,TEC
M8340107^7960%&	796		C,H,K,M,V	B, D	C, G	DAL2,IRC2,TEC
M8340107^8060%&	806	Link at Top	C,H,K,M,V	B, D, F	C, G	DAL2,IRC2,TEC
M8340107^8160%&	816		C,H,K,M,V	B, D	C, G	DAL2,IRC2,TEC
M8340107^8200%&	820		C,H,K,M,V	G, J	C, G	DAL2,IRC2,TEC
M8340107^8250%&	825		C,H,K,M,V	B, D, F	C, G	DAL2,IRC2,TEC
M8340107^8350%&	835		C,H,K,M,V	B, D	C, G	DAL2,IRC2,TEC
M8340107^8450%&	845	Link at Top	C,H,K,M,V	B, D, F	C, G	DAL2,IRC2,TEC
M8340107^8560%&	856		C,H,K,M,V	B, D	C, G	DAL2,IRC2,TEC
M8340107^8660%&	866		C,H,K,M,V	B, D, F	C, G	DAL2,IRC2,TEC
M8340107^8760%&	876		C,H,K,M,V	B, D	C, G	DAL2,IRC2,TEC
M8340107^8870%&	887		C,H,K,M,V	B, D, F	C, G	DAL2,IRC2,TEC
M8340107^8980%&	898	Link at Top	C,H,K,M,V	B, D	C, G	DAL2,IRC2,TEC
M8340107^9090%&	909		C,H,K,M,V	B, D, F	C, G	DAL2,IRC2,TEC
M8340107^9100%&	910		C,H,K,M,V	G, J	C, G	DAL2,IRC2,TEC
M8340107^9200%&	920		C,H,K,M,V	B, D	C, G	DAL2,IRC2,TEC
M8340107^9310%&	931		C,H,K,M,V	B, D, F	C, G	DAL2,IRC2,TEC
M8340107^9420%&	942	Link at Top	C,H,K,M,V	B, D	C, G	DAL2,IRC2,TEC
M8340107^9530%&	953		C,H,K,M,V	B, D, F	C, G	DAL2,IRC2,TEC
M8340107^9650%&	965		C,H,K,M,V	B, D	C, G	DAL2,IRC2,TEC
M8340107^9760%&	976		C,H,K,M,V	B, D, F	C, G	DAL2,IRC2,TEC
M8340107^9880%&	988		C,H,K,M,V	B, D	C, G	DAL2,IRC2,TEC
M8340107^1001%&	1,000	Link at Top	C,H,K,M,V	B, D, F, G, J	C, G	DAL2,IRC2,TEC
M8340107^1011%&	1,010		C,H,K,M,V	B, D	C, G	DAL2,IRC2,TEC
M8340107^1021%&	1,020		C,H,K,M,V	B, D, F	C, G	DAL2,IRC2,TEC
M8340107^1041%&	1,040		C,H,K,M,V	B, D	C, G	DAL2,IRC2,TEC
M8340107^1051%&	1,050		C,H,K,M,V	B, D, F	C, G	DAL2,IRC2,TEC
M8340107^1061%&	1,060	Link at Top	C,H,K,M,V	B, D	C, G	DAL2,IRC2,TEC
M8340107^1071%&	1,070		C,H,K,M,V	B, D, F	C, G	DAL2,IRC2,TEC
M8340107^1091%&	1,090		C,H,K,M,V	B, D	C, G	DAL2,IRC2,TEC
M8340107^1101%&	1,100		C,H,K,M,V	B, D, F, G, J	C, G	DAL2,IRC2,TEC
M8340107^1111%&	1,110		C,H,K,M,V	B, D	C, G	DAL2,IRC2,TEC
M8340107^1131%&	1,130	Link at Top	C,H,K,M,V	B, D, F	C, G	DAL2,IRC2,TEC
M8340107^1141%&	1,140		C,H,K,M,V	B, D	C, G	DAL2,IRC2,TEC
M8340107^1151%&	1,150		C,H,K,M,V	B, D, F	C, G	DAL2,IRC2,TEC
M8340107^1171%&	1,170		C,H,K,M,V	B, D	C, G	DAL2,IRC2,TEC
M8340107^1181%&	1,180		C,H,K,M,V	B, D, F	C, G	DAL2,IRC2,TEC

M8340107^1201%&	1,200	Link at Top	C,H,K,M,V	B, D, F, G, J	C, G	DAL2,IRC2,TEC
M8340107^1211%&	1,210		C,H,K,M,V	B, D, F	C, G	DAL2,IRC2,TEC
M8340107^1231%&	1,230		C,H,K,M,V	B, D	C, G	DAL2,IRC2,TEC
M8340107^1241%&	1,240		C,H,K,M,V	B, D, F	C, G	DAL2,IRC2,TEC
M8340107^1261%&	1,260		C,H,K,M,V	B, D	C, G	DAL2,IRC2,TEC
M8340107^1271%&	1,270	Link at Top	C,H,K,M,V	B, D, F	C, G	DAL2,IRC2,TEC
M8340107^1291%&	1,290		C,H,K,M,V	B, D	C, G	DAL2,IRC2,TEC
M8340107^1301%&	1,300		C,H,K,M,V	B, D, F, G, J	C, G	DAL2,IRC2,TEC
M8340107^1321%&	1,320		C,H,K,M,V	B, D	C, G	DAL2,IRC2,TEC
M8340107^1331%&	1,330		C,H,K,M,V	B, D, F	C, G	DAL2,IRC2,TEC
M8340107^1351%&	1,350	Link at Top	C,H,K,M,V	B, D	C, G	DAL2,IRC2,TEC
M8340107^1371%&	1,370		C,H,K,M,V	B, D, F	C, G	DAL2,IRC2,TEC
M8340107^1381%&	1,380		C,H,K,M,V	B, D	C, G	DAL2,IRC2,TEC
M8340107^1401%&	1,400		C,H,K,M,V	B, D, F	C, G	DAL2,IRC2,TEC
M8340107^1421%&	1,420		C,H,K,M,V	B, D	C, G	DAL2,IRC2,TEC
M8340107^1431%&	1,430	Link at Top	C,H,K,M,V	B, D, F	C, G	DAL2,IRC2,TEC
M8340107^1451%&	1,450		C,H,K,M,V	B, D	C, G	DAL2,IRC2,TEC
M8340107^1471%&	1,470		C,H,K,M,V	B, D, F	C, G	DAL2,IRC2,TEC
M8340107^1491%&	1,490		C,H,K,M,V	B, D	C, G	DAL2,IRC2,TEC
M8340107^1501%&	1,500		C,H,K,M,V	B, D, F, G, J	C, G	DAL2,IRC2,TEC
M8340107^1521%&	1,520	Link at Top	C,H,K,M,V	B, D	C, G	DAL2,IRC2,TEC
M8340107^1541%&	1,540		C,H,K,M,V	B, D, F	C, G	DAL2,IRC2,TEC
M8340107^1561%&	1,560		C,H,K,M,V	B, D	C, G	DAL2,IRC2,TEC
M8340107^1581%&	1,580		C,H,K,M,V	B, D, F	C, G	DAL2,IRC2,TEC
M8340107^1601%&	1,600		C,H,K,M,V	B, D, G, J	C, G	DAL2,IRC2,TEC
M8340107^1621%&	1,620	Link at Top	C,H,K,M,V	B, D, F	C, G	DAL2,IRC2,TEC
M8340107^1641%&	1,640		C,H,K,M,V	B, D	C, G	DAL2,IRC2,TEC
M8340107^1651%&	1,650		C,H,K,M,V	B, D, F	C, G	DAL2,IRC2,TEC
M8340107^1671%&	1,670		C,H,K,M,V	B, D	C, G	DAL2,IRC2,TEC
M8340107^1691%&	1,690		C,H,K,M,V	B, D, F	C, G	DAL2,IRC2,TEC
M8340107^1721%&	1,720	Link at Top	C,H,K,M,V	B, D	C, G	DAL2,IRC2,TEC
M8340107^1741%&	1,740		C,H,K,M,V	B, D, F	C, G	DAL2,IRC2,TEC
M8340107^1761%&	1,760		C,H,K,M,V	B, D	C, G	DAL2,IRC2,TEC
M8340107^1781%&	1,780		C,H,K,M,V	B, D, F	C, G	DAL2,IRC2,TEC
M8340107^1801%&	1,800		C,H,K,M,V	B, D, G, J	C, G	DAL2,IRC2,TEC
M8340107^1821%&	1,820	Link at Top	C,H,K,M,V	B, D, F	C, G	DAL2,IRC2,TEC
M8340107^1841%&	1,840		C,H,K,M,V	B, D	C, G	DAL2,IRC2,TEC
M8340107^1871%&	1,870		C,H,K,M,V	B, D, F	C, G	DAL2,IRC2,TEC
M8340107^1891%&	1,890		C,H,K,M,V	B, D	C, G	DAL2,IRC2,TEC
M8340107^1911%&	1,910		C,H,K,M,V	B, D, F	C, G	DAL2,IRC2,TEC
M8340107^1931%&	1,930	Link at Top	C,H,K,M,V	B, D	C, G	DAL2,IRC2,TEC
M8340107^1961%&	1,960		C,H,K,M,V	B, D, F	C, G	DAL2,IRC2,TEC
M8340107^1981%&	1,980		C,H,K,M,V	B, D	C, G	DAL2,IRC2,TEC
M8340107^2001%&	2,000		C,H,K,M,V	B, D, F, G, J	C, G	DAL2,IRC2,TEC
M8340107^2031%&	2,030		C,H,K,M,V	B, D	C, G	DAL2,IRC2,TEC
M8340107^2051%&	2,050	Link at Top	C,H,K,M,V	B, D, F	C, G	DAL2,IRC2,TEC
M8340107^2081%&	2,080		C,H,K,M,V	B, D	C, G	DAL2,IRC2,TEC

M8340107^2101%&	2,100		C,H,K,M,V	B, D, F	C, G	DAL2,IRC2,TEC
M8340107^2131%&	2,130		C,H,K,M,V	B, D	C, G	DAL2,IRC2,TEC
M8340107^2151%&	2,150		C,H,K,M,V	B, D, F	C, G	DAL2,IRC2,TEC
M8340107^2181%&	2,180	Link at Top	C,H,K,M,V	B, D	C, G	DAL2,IRC2,TEC
M8340107^2201%&	2,200		C,H,K,M,V	G, J	C, G	DAL2,IRC2,TEC
M8340107^2211%&	2,210		C,H,K,M,V	B, D, F	C, G	DAL2,IRC2,TEC
M8340107^2231%&	2,230		C,H,K,M,V	B, D	C, G	DAL2,IRC2,TEC
M8340107^2261%&	2,260		C,H,K,M,V	B, D, F	C, G	DAL2,IRC2,TEC
M8340107^2291%&	2,290	Link at Top	C,H,K,M,V	B, D	C, G	DAL2,IRC2,TEC
M8340107^2321%&	2,320		C,H,K,M,V	B, D, F	C, G	DAL2,IRC2,TEC
M8340107^2341%&	2,340		C,H,K,M,V	B, D	C, G	DAL2,IRC2,TEC
M8340107^2371%&	2,370		C,H,K,M,V	B, D, F	C, G	DAL2,IRC2,TEC
M8340107^2401%&	2,400		C,H,K,M,V	B, D, F, G, J	C, G	DAL2,IRC2,TEC
M8340107^2431%&	2,430	Link at Top	C,H,K,M,V	B, D, F	C, G	DAL2,IRC2,TEC
M8340107^2461%&	2,460		C,H,K,M,V	B, D	C, G	DAL2,IRC2,TEC
M8340107^2491%&	2,490		C,H,K,M,V	B, D, F	C, G	DAL2,IRC2,TEC
M8340107^2521%&	2,520		C,H,K,M,V	B, D	C, G	DAL2,IRC2,TEC
M8340107^2551%&	2,550		C,H,K,M,V	B, D, F	C, G	DAL2,IRC2,TEC
M8340107^2581%&	2,580	Link at Top	C,H,K,M,V	B, D	C, G	DAL2,IRC2,TEC
M8340107^2611%&	2,610		C,H,K,M,V	B, D, F	C, G	DAL2,IRC2,TEC
M8340107^2641%&	2,640		C,H,K,M,V	B, D	C, G	DAL2,IRC2,TEC
M8340107^2671%&	2,670		C,H,K,M,V	B, D, F	C, G	DAL2,IRC2,TEC
M8340107^2701%&	2,700		C,H,K,M,V	G, J	C, G	DAL2,IRC2,TEC
M8340107^2711%&	2,710	Link at Top	C,H,K,M,V	B, D	C, G	DAL2,IRC2,TEC
M8340107^2741%&	2,740		C,H,K,M,V	B, D, F	C, G	DAL2,IRC2,TEC
M8340107^2771%&	2,770		C,H,K,M,V	B, D	C, G	DAL2,IRC2,TEC
M8340107^2801%&	2,800		C,H,K,M,V	B, D, F	C, G	DAL2,IRC2,TEC
M8340107^2841%&	2,840		C,H,K,M,V	B, D	C, G	DAL2,IRC2,TEC
M8340107^2871%&	2,870	Link at Top	C,H,K,M,V	B, D, F	C, G	DAL2,IRC2,TEC
M8340107^2911%&	2,910		C,H,K,M,V	B, D	C, G	DAL2,IRC2,TEC
M8340107^2941%&	2,940		C,H,K,M,V	B, D, F	C, G	DAL2,IRC2,TEC
M8340107^2981%&	2,980		C,H,K,M,V	B, D	C, G	DAL2,IRC2,TEC
M8340107^3001%&	3,000		C,H,K,M,V	G, J	C, G	DAL2,IRC2,TEC
M8340107^3011%&	3,010	Link at Top	C,H,K,M,V	B, D, F	C, G	DAL2,IRC2,TEC
M8340107^3051%&	3,050		C,H,K,M,V	B, D	C, G	DAL2,IRC2,TEC
M8340107^3091%&	3,090		C,H,K,M,V	B, D, F	C, G	DAL2,IRC2,TEC
M8340107^3121%&	3,120		C,H,K,M,V	B, D	C, G	DAL2,IRC2,TEC
M8340107^3161%&	3,160		C,H,K,M,V	B, D, F	C, G	DAL2,IRC2,TEC
M8340107^3201%&	3,200	Link at Top	C,H,K,M,V	B, D	C, G	DAL2,IRC2,TEC
M8340107^3241%&	3,240		C,H,K,M,V	B, D, F	C, G	DAL2,IRC2,TEC
M8340107^3281%&	3,280		C,H,K,M,V	B, D	C, G	DAL2,IRC2,TEC
M8340107^3301%&	3,300		C,H,K,M,V	G, J	C, G	DAL2,IRC2,TEC
M8340107^3321%&	3,320		C,H,K,M,V	B, D, F	C, G	DAL2,IRC2,TEC
M8340107^3361%&	3,360	Link at Top	C,H,K,M,V	B, D	C, G	DAL2,IRC2,TEC
M8340107^3401%&	3,400		C,H,K,M,V	B, D, F	C, G	DAL2,IRC2,TEC
M8340107^3441%&	3,440		C,H,K,M,V	B, D	C, G	DAL2,IRC2,TEC
M8340107^3481%&	3,480		C,H,K,M,V	B, D, F	C, G	DAL2,IRC2,TEC

M8340107^3521%&	3,520		C,H,K,M,V	B, D	C, G	DAL2,IRC2,TEC
M8340107^3571%&	3,570	Link at Top	C,H,K,M,V	B, D, F	C, G	DAL2,IRC2,TEC
M8340107^3601%&	3,600		C,H,K,M,V	G, J	C, G	DAL2,IRC2,TEC
M8340107^3611%&	3,610		C,H,K,M,V	B, D	C, G	DAL2,IRC2,TEC
M8340107^3651%&	3,650		C,H,K,M,V	B, D, F	C, G	DAL2,IRC2,TEC
M8340107^3701%&	3,700		C,H,K,M,V	B, D	C, G	DAL2,IRC2,TEC
M8340107^3741%&	3,740	Link at Top	C,H,K,M,V	B, D, F	C, G	DAL2,IRC2,TEC
M8340107^3791%&	3,790		C,H,K,M,V	B, D	C, G	DAL2,IRC2,TEC
M8340107^3831%&	3,830		C,H,K,M,V	B, D, F	C, G	DAL2,IRC2,TEC
M8340107^3881%&	3,880		C,H,K,M,V	B, D	C, G	DAL2,IRC2,TEC
M8340107^3901%&	3,900		C,H,K,M,V	G, J	C, G	DAL2,IRC2,TEC
M8340107^3921%&	3,920	Link at Top	C,H,K,M,V	B, D, F	C, G	DAL2,IRC2,TEC
M8340107^3971%&	3,970		C,H,K,M,V	B, D	C, G	DAL2,IRC2,TEC
M8340107^4021%&	4,020		C,H,K,M,V	B, D, F	C, G	DAL2,IRC2,TEC
M8340107^4071%&	4,070		C,H,K,M,V	B, D	C, G	DAL2,IRC2,TEC
M8340107^4121%&	4,120		C,H,K,M,V	B, D, F	C, G	DAL2,IRC2,TEC
M8340107^4171%&	4,170	Link at Top	C,H,K,M,V	B, D	C, G	DAL2,IRC2,TEC
M8340107^4221%&	4,220		C,H,K,M,V	B, D, F	C, G	DAL2,IRC2,TEC
M8340107^4271%&	4,270		C,H,K,M,V	B, D	C, G	DAL2,IRC2,TEC
M8340107^4301%&	4,300		C,H,K,M,V	G, J	C, G	DAL2,IRC2,TEC
M8340107^4321%&	4,320		C,H,K,M,V	B, D, F	C, G	DAL2,IRC2,TEC
M8340107^4371%&	4,370	Link at Top	C,H,K,M,V	B, D	C, G	DAL2,IRC2,TEC
M8340107^4421%&	4,420		C,H,K,M,V	B, D, F	C, G	DAL2,IRC2,TEC
M8340107^4481%&	4,480		C,H,K,M,V	B, D	C, G	DAL2,IRC2,TEC
M8340107^4531%&	4,530		C,H,K,M,V	B, D, F	C, G	DAL2,IRC2,TEC
M8340107^4591%&	4,590		C,H,K,M,V	B, D	C, G	DAL2,IRC2,TEC
M8340107^4641%&	4,640	Link at Top	C,H,K,M,V	B, D, F	C, G	DAL2,IRC2,TEC
M8340107^4701%&	4,700		C,H,K,M,V	B, D, G, J	C, G	DAL2,IRC2,TEC
M8340107^4751%&	4,750		C,H,K,M,V	B, D, F	C, G	DAL2,IRC2,TEC
M8340107^4811%&	4,810		C,H,K,M,V	B, D	C, G	DAL2,IRC2,TEC
M8340107^4871%&	4,870		C,H,K,M,V	B, D, F	C, G	DAL2,IRC2,TEC
M8340107^4931%&	4,930	Link at Top	C,H,K,M,V	B, D	C, G	DAL2,IRC2,TEC
M8340107^4991%&	4,990		C,H,K,M,V	B, D, F	C, G	DAL2,IRC2,TEC
M8340107^5051%&	5,050		C,H,K,M,V	B, D	C, G	DAL2,IRC2,TEC
M8340107^5101%&	5,100		C,H,K,M,V	G, J	C, G	DAL2,IRC2,TEC
M8340107^5111%&	5,110		C,H,K,M,V	B, D, F	C, G	DAL2,IRC2,TEC
M8340107^5171%&	5,170	Link at Top	C,H,K,M,V	B, D	C, G	DAL2,IRC2,TEC
M8340107^5231%&	5,230		C,H,K,M,V	B, D, F	C, G	DAL2,IRC2,TEC
M8340107^5301%&	5,300		C,H,K,M,V	B, D	C, G	DAL2,IRC2,TEC
M8340107^5361%&	5,360		C,H,K,M,V	B, D, F	C, G	DAL2,IRC2,TEC
M8340107^5421%&	5,420		C,H,K,M,V	B, D	C, G	DAL2,IRC2,TEC
M8340107^5491%&	5,490	Link at Top	C,H,K,M,V	B, D, F	C, G	DAL2,IRC2,TEC
M8340107^5561%&	5,560		C,H,K,M,V	B, D	C, G	DAL2,IRC2,TEC
M8340107^5601%&	5,600		C,H,K,M,V	G, J	C, G	DAL2,IRC2,TEC
M8340107^5621%&	5,620		C,H,K,M,V	B, D, F	C, G	DAL2,IRC2,TEC
M8340107^5691%&	5,690		C,H,K,M,V	B, D	C, G	DAL2,IRC2,TEC
M8340107^5761%&	5,760	Link at Top	C,H,K,M,V	B, D, F	C, G	DAL2,IRC2,TEC

M8340107^5831%&	5,830		C,H,K,M,V	B, D	C, G	DAL2,IRC2,TEC
M8340107^5901%&	5,900		C,H,K,M,V	B, D, F	C, G	DAL2,IRC2,TEC
M8340107^5971%&	5,970		C,H,K,M,V	B, D	C, G	DAL2,IRC2,TEC
M8340107^6041%&	6,040		C,H,K,M,V	B, D, F	C, G	DAL2,IRC2,TEC
M8340107^6121%&	6,120	Link at Top	C,H,K,M,V	B, D	C, G	DAL2,IRC2,TEC
M8340107^6191%&	6,190		C,H,K,M,V	B, D, F	C, G	DAL2,IRC2,TEC
M8340107^6201%&	6,200		C,H,K,M,V	G, J	C, G	DAL2,IRC2,TEC
M8340107^6261%&	6,260		C,H,K,M,V	B, D	C, G	DAL2,IRC2,TEC
M8340107^6341%&	6,340		C,H,K,M,V	B, D, F	C, G	DAL2,IRC2,TEC
M8340107^6421%&	6,420	Link at Top	C,H,K,M,V	B, D	C, G	DAL2,IRC2,TEC
M8340107^6491%&	6,490		C,H,K,M,V	B, D, F	C, G	DAL2,IRC2,TEC
M8340107^6571%&	6,570		C,H,K,M,V	B, D	C, G	DAL2,IRC2,TEC
M8340107^6651%&	6,650		C,H,K,M,V	B, D, F	C, G	DAL2,IRC2,TEC
M8340107^6731%&	6,730		C,H,K,M,V	B, D	C, G	DAL2,IRC2,TEC
M8340107^6801%&	6,800	Link at Top	C,H,K,M,V	G, J	C, G	DAL2,IRC2,TEC
M8340107^6811%&	6,810		C,H,K,M,V	B, D, F	C, G	DAL2,IRC2,TEC
M8340107^6901%&	6,900		C,H,K,M,V	B, D	C, G	DAL2,IRC2,TEC
M8340107^6981%&	6,980		C,H,K,M,V	B, D, F	C, G	DAL2,IRC2,TEC
M8340107^7061%&	7,060		C,H,K,M,V	B, D	C, G	DAL2,IRC2,TEC
M8340107^7151%&	7,150	Link at Top	C,H,K,M,V	B, D, F	C, G	DAL2,IRC2,TEC
M8340107^7231%&	7,230		C,H,K,M,V	B, D	C, G	DAL2,IRC2,TEC
M8340107^7321%&	7,320		C,H,K,M,V	B, D, F	C, G	DAL2,IRC2,TEC
M8340107^7411%&	7,410		C,H,K,M,V	B, D	C, G	DAL2,IRC2,TEC
M8340107^7501%&	7,500		C,H,K,M,V	B, D, F, G, J	C, G	DAL2,IRC2,TEC
M8340107^7591%&	7,590	Link at Top	C,H,K,M,V	B, D	C, G	DAL2,IRC2,TEC
M8340107^7681%&	7,680		C,H,K,M,V	B, D, F	C, G	DAL2,IRC2,TEC
M8340107^7771%&	7,770		C,H,K,M,V	B, D	C, G	DAL2,IRC2,TEC
M8340107^7871%&	7,870		C,H,K,M,V	B, D, F	C, G	DAL2,IRC2,TEC
M8340107^7961%&	7,960		C,H,K,M,V	B, D	C, G	DAL2,IRC2,TEC
M8340107^8061%&	8,060	Link at Top	C,H,K,M,V	B, D, F	C, G	DAL2,IRC2,TEC
M8340107^8161%&	8,160		C,H,K,M,V	B, D	C, G	DAL2,IRC2,TEC
M8340107^8201%&	8,200		C,H,K,M,V	G, J	C, G	DAL2,IRC2,TEC
M8340107^8251%&	8,250		C,H,K,M,V	B, D, F	C, G	DAL2,IRC2,TEC
M8340107^8351%&	8,350		C,H,K,M,V	B, D	C, G	DAL2,IRC2,TEC
M8340107^8451%&	8,450	Link at Top	C,H,K,M,V	B, D, F	C, G	DAL2,IRC2,TEC
M8340107^8561%&	8,560		C,H,K,M,V	B, D	C, G	DAL2,IRC2,TEC
M8340107^8661%&	8,660		C,H,K,M,V	B, D, F	C, G	DAL2,IRC2,TEC
M8340107^8761%&	8,760		C,H,K,M,V	B, D	C, G	DAL2,IRC2,TEC
M8340107^8871%&	8,870		C,H,K,M,V	B, D, F	C, G	DAL2,IRC2,TEC
M8340107^8981%&	8,980	Link at Top	C,H,K,M,V	B, D	C, G	DAL2,IRC2,TEC
M8340107^9091%&	9,090		C,H,K,M,V	B, D, F	C, G	DAL2,IRC2,TEC
M8340107^9101%&	9,100		C,H,K,M,V	G, J	C, G	DAL2,IRC2,TEC
M8340107^9201%&	9,200		C,H,K,M,V	B, D	C, G	DAL2,IRC2,TEC
M8340107^9311%&	9,310		C,H,K,M,V	B, D, F	C, G	DAL2,IRC2,TEC
M8340107^9421%&	9,420	Link at Top	C,H,K,M,V	B, D	C, G	DAL2,IRC2,TEC
M8340107^9531%&	9,530		C,H,K,M,V	B, D, F	C, G	DAL2,IRC2,TEC
M8340107^9651%&	9,650		C,H,K,M,V	B, D	C, G	DAL2,IRC2,TEC

M8340107^9761%&	9,760		C,H,K,M,V	B, D, F	C, G	DAL2,IRC2,TEC
M8340107^9881%&	9,880		C,H,K,M,V	B, D	C, G	DAL2,IRC2,TEC
M8340107^1002%&	10,000	Link at Top	C,H,K,M,V	B, D, F, G, J	C, G	DAL2,IRC2,TEC
M8340107^1012%&	10,100		C,H,K,M,V	B, D	C, G	DAL2,IRC2,TEC
M8340107^1022%&	10,200		C,H,K,M,V	B, D, F	C, G	DAL2,IRC2,TEC
M8340107^1042%&	10,400		C,H,K,M,V	B, D	C, G	DAL2,IRC2,TEC
M8340107^1052%&	10,500		C,H,K,M,V	B, D, F	C, G	DAL2,IRC2,TEC
M8340107^1062%&	10,600	Link at Top	C,H,K,M,V	B, D	C, G	DAL2,IRC2,TEC
M8340107^1072%&	10,700		C,H,K,M,V	B, D, F	C, G	DAL2,IRC2,TEC
M8340107^1092%&	10,900		C,H,K,M,V	B, D	C, G	DAL2,IRC2,TEC
M8340107^1102%&	11,000		C,H,K,M,V	B, D, F, G, J	C, G	DAL2,IRC2,TEC
M8340107^1112%&	11,100		C,H,K,M,V	B, D	C, G	DAL2,IRC2,TEC
M8340107^1132%&	11,300	Link at Top	C,H,K,M,V	B, D, F	C, G	DAL2,IRC2,TEC
M8340107^1142%&	11,400		C,H,K,M,V	B, D	C, G	DAL2,IRC2,TEC
M8340107^1152%&	11,500		C,H,K,M,V	B, D, F	C, G	DAL2,IRC2,TEC
M8340107^1172%&	11,700		C,H,K,M,V	B, D	C, G	DAL2,IRC2,TEC
M8340107^1182%&	11,800		C,H,K,M,V	B, D, F	C, G	DAL2,IRC2,TEC
M8340107^1202%&	12,000	Link at Top	C,H,K,M,V	B, D, F, G, J	C, G	DAL2,IRC2,TEC
M8340107^1212%&	12,100		C,H,K,M,V	B, D, F	C, G	DAL2,IRC2,TEC
M8340107^1232%&	12,300		C,H,K,M,V	B, D	C, G	DAL2,IRC2,TEC
M8340107^1242%&	12,400		C,H,K,M,V	B, D, F	C, G	DAL2,IRC2,TEC
M8340107^1262%&	12,600		C,H,K,M,V	B, D	C, G	DAL2,IRC2,TEC
M8340107^1272%&	12,700	Link at Top	C,H,K,M,V	B, D, F	C, G	DAL2,IRC2,TEC
M8340107^1292%&	12,900		C,H,K,M,V	B, D	C, G	DAL2,IRC2,TEC
M8340107^1302%&	13,000		C,H,K,M,V	B, D, F, G, J	C, G	DAL2,IRC2,TEC
M8340107^1322%&	13,200		C,H,K,M,V	B, D	C, G	DAL2,IRC2,TEC
M8340107^1332%&	13,300		C,H,K,M,V	B, D, F	C, G	DAL2,IRC2,TEC
M8340107^1352%&	13,500	Link at Top	C,H,K,M,V	B, D	C, G	DAL2,IRC2,TEC
M8340107^1372%&	13,700		C,H,K,M,V	B, D, F	C, G	DAL2,IRC2,TEC
M8340107^1382%&	13,800		C,H,K,M,V	B, D	C, G	DAL2,IRC2,TEC
M8340107^1402%&	14,000		C,H,K,M,V	B, D, F	C, G	DAL2,IRC2,TEC
M8340107^1422%&	14,200		C,H,K,M,V	B, D	C, G	DAL2,IRC2,TEC
M8340107^1432%&	14,300	Link at Top	C,H,K,M,V	B, D, F	C, G	DAL2,IRC2,TEC
M8340107^1452%&	14,500		C,H,K,M,V	B, D	C, G	DAL2,IRC2,TEC
M8340107^1472%&	14,700		C,H,K,M,V	B, D, F	C, G	DAL2,IRC2,TEC
M8340107^1492%&	14,900		C,H,K,M,V	B, D	C, G	DAL2,IRC2,TEC
M8340107^1502%&	15,000		C,H,K,M,V	B, D, F, G, J	C, G	DAL2,IRC2,TEC
M8340107^1522%&	15,200	Link at Top	C,H,K,M,V	B, D	C, G	DAL2,IRC2,TEC
M8340107^1542%&	15,400		C,H,K,M,V	B, D, F	C, G	DAL2,IRC2,TEC
M8340107^1562%&	15,600		C,H,K,M,V	B, D	C, G	DAL2,IRC2,TEC
M8340107^1582%&	15,800		C,H,K,M,V	B, D, F	C, G	DAL2,IRC2,TEC
M8340107^1602%&	16,000		C,H,K,M,V	B, D, G, J	C, G	DAL2,IRC2,TEC
M8340107^1622%&	16,200	Link at Top	C,H,K,M,V	B, D, F	C, G	DAL2,IRC2,TEC
M8340107^1642%&	16,400		C,H,K,M,V	B, D	C, G	DAL2,IRC2,TEC
M8340107^1652%&	16,500		C,H,K,M,V	B, D, F	C, G	DAL2,IRC2,TEC
M8340107^1672%&	16,700		C,H,K,M,V	B, D	C, G	DAL2,IRC2,TEC
M8340107^1692%&	16,900		C,H,K,M,V	B, D, F	C, G	DAL2,IRC2,TEC

M8340107^1722%&	17,200	Link at Top	C,H,K,M,V	B, D	C, G	DAL2,IRC2,TEC
M8340107^1742%&	17,400		C,H,K,M,V	B, D, F	C, G	DAL2,IRC2,TEC
M8340107^1762%&	17,600		C,H,K,M,V	B, D	C, G	DAL2,IRC2,TEC
M8340107^1782%&	17,800		C,H,K,M,V	B, D, F	C, G	DAL2,IRC2,TEC
M8340107^1802%&	18,000		C,H,K,M,V	B, D, G, J	C, G	DAL2,IRC2,TEC
M8340107^1822%&	18,200	Link at Top	C,H,K,M,V	B, D, F	C, G	DAL2,IRC2,TEC
M8340107^1842%&	18,400		C,H,K,M,V	B, D	C, G	DAL2,IRC2,TEC
M8340107^1872%&	18,700		C,H,K,M,V	B, D, F	C, G	DAL2,IRC2,TEC
M8340107^1892%&	18,900		C,H,K,M,V	B, D	C, G	DAL2,IRC2,TEC
M8340107^1912%&	19,100		C,H,K,M,V	B, D, F	C, G	DAL2,IRC2,TEC
M8340107^1932%&	19,300	Link at Top	C,H,K,M,V	B, D	C, G	DAL2,IRC2,TEC
M8340107^1962%&	19,600		C,H,K,M,V	B, D, F	C, G	DAL2,IRC2,TEC
M8340107^1982%&	19,800		C,H,K,M,V	B, D	C, G	DAL2,IRC2,TEC
M8340107^2002%&	20,000		C,H,K,M,V	B, D, F, G, J	C, G	DAL2,IRC2,TEC
M8340107^2032%&	20,300		C,H,K,M,V	B, D	C, G	DAL2,IRC2,TEC
M8340107^2052%&	20,500	Link at Top	C,H,K,M,V	B, D, F	C, G	DAL2,IRC2,TEC
M8340107^2082%&	20,800		C,H,K,M,V	B, D	C, G	DAL2,IRC2,TEC
M8340107^2102%&	21,000		C,H,K,M,V	B, D, F	C, G	DAL2,IRC2,TEC
M8340107^2132%&	21,300		C,H,K,M,V	B, D	C, G	DAL2,IRC2,TEC
M8340107^2152%&	21,500		C,H,K,M,V	B, D, F	C, G	DAL2,IRC2,TEC
M8340107^2182%&	21,800	Link at Top	C,H,K,M,V	B, D	C, G	DAL2,IRC2,TEC
M8340107^2202%&	22,000		C,H,K,M,V	G, J	C, G	DAL2,IRC2,TEC
M8340107^2212%&	22,100		C,H,K,M,V	B, D, F	C, G	DAL2,IRC2,TEC
M8340107^2232%&	22,300		C,H,K,M,V	B, D	C, G	DAL2,IRC2,TEC
M8340107^2262%&	22,600		C,H,K,M,V	B, D, F	C, G	DAL2,IRC2,TEC
M8340107^2292%&	22,900	Link at Top	C,H,K,M,V	B, D	C, G	DAL2,IRC2,TEC
M8340107^2322%&	23,200		C,H,K,M,V	B, D, F	C, G	DAL2,IRC2,TEC
M8340107^2342%&	23,400		C,H,K,M,V	B, D	C, G	DAL2,IRC2,TEC
M8340107^2372%&	23,700		C,H,K,M,V	B, D, F	C, G	DAL2,IRC2,TEC
M8340107^2402%&	24,000		C,H,K,M,V	B, D, F, G, J	C, G	DAL2,IRC2,TEC
M8340107^2432%&	24,300	Link at Top	C,H,K,M,V	B, D, F	C, G	DAL2,IRC2,TEC
M8340107^2462%&	24,600		C,H,K,M,V	B, D	C, G	DAL2,IRC2,TEC
M8340107^2492%&	24,900		C,H,K,M,V	B, D, F	C, G	DAL2,IRC2,TEC
M8340107^2522%&	25,200		C,H,K,M,V	B, D	C, G	DAL2,IRC2,TEC
M8340107^2552%&	25,500		C,H,K,M,V	B, D, F	C, G	DAL2,IRC2,TEC
M8340107^2582%&	25,800	Link at Top	C,H,K,M,V	B, D	C, G	DAL2,IRC2,TEC
M8340107^2612%&	26,100		C,H,K,M,V	B, D, F	C, G	DAL2,IRC2,TEC
M8340107^2642%&	26,400		C,H,K,M,V	B, D	C, G	DAL2,IRC2,TEC
M8340107^2672%&	26,700		C,H,K,M,V	B, D, F	C, G	DAL2,IRC2,TEC
M8340107^2702%&	27,000		C,H,K,M,V	G, J	C, G	DAL2,IRC2,TEC
M8340107^2712%&	27,100	Link at Top	C,H,K,M,V	B, D	C, G	DAL2,IRC2,TEC
M8340107^2742%&	27,400		C,H,K,M,V	B, D, F	C, G	DAL2,IRC2,TEC
M8340107^2772%&	27,700		C,H,K,M,V	B, D	C, G	DAL2,IRC2,TEC
M8340107^2802%&	28,000		C,H,K,M,V	B, D, F	C, G	DAL2,IRC2,TEC
M8340107^2842%&	28,400		C,H,K,M,V	B, D	C, G	DAL2,IRC2,TEC
M8340107^2872%&	28,700	Link at Top	C,H,K,M,V	B, D, F	C, G	DAL2,IRC2,TEC
M8340107^2912%&	29,100		C,H,K,M,V	B, D	C, G	DAL2,IRC2,TEC

M8340107^2942%&	29,400		C,H,K,M,V	B, D, F	C, G	DAL2,IRC2,TEC
M8340107^2982%&	29,800		C,H,K,M,V	B, D	C, G	DAL2,IRC2,TEC
M8340107^3002%&	30,000		C,H,K,M,V	G, J	C, G	DAL2,IRC2,TEC
M8340107^3012%&	30,100	Link at Top	C,H,K,M,V	B, D, F	C, G	DAL2,IRC2,TEC
M8340107^3052%&	30,500		C,H,K,M,V	B, D	C, G	DAL2,IRC2,TEC
M8340107^3092%&	30,900		C,H,K,M,V	B, D, F	C, G	DAL2,IRC2,TEC
M8340107^3122%&	31,200		C,H,K,M,V	B, D	C, G	DAL2,IRC2,TEC
M8340107^3162%&	31,600		C,H,K,M,V	B, D, F	C, G	DAL2,IRC2,TEC
M8340107^3202%&	32,000	Link at Top	C,H,K,M,V	B, D	C, G	DAL2,IRC2,TEC
M8340107^3242%&	32,400		C,H,K,M,V	B, D, F	C, G	DAL2,IRC2,TEC
M8340107^3282%&	32,800		C,H,K,M,V	B, D	C, G	DAL2,IRC2,TEC
M8340107^3302%&	33,000		C,H,K,M,V	G, J	C, G	DAL2,IRC2,TEC
M8340107^3322%&	33,200		C,H,K,M,V	B, D, F	C, G	DAL2,IRC2,TEC
M8340107^3362%&	33,600	Link at Top	C,H,K,M,V	B, D	C, G	DAL2,IRC2,TEC
M8340107^3402%&	34,000		C,H,K,M,V	B, D, F	C, G	DAL2,IRC2,TEC
M8340107^3442%&	34,400		C,H,K,M,V	B, D	C, G	DAL2,IRC2,TEC
M8340107^3482%&	34,800		C,H,K,M,V	B, D, F	C, G	DAL2,IRC2,TEC
M8340107^3522%&	35,200		C,H,K,M,V	B, D	C, G	DAL2,IRC2,TEC
M8340107^3572%&	35,700	Link at Top	C,H,K,M,V	B, D, F	C, G	DAL2,IRC2,TEC
M8340107^3602%&	36,000		C,H,K,M,V	G, J	C, G	DAL2,IRC2,TEC
M8340107^3612%&	36,100		C,H,K,M,V	B, D	C, G	DAL2,IRC2,TEC
M8340107^3652%&	36,500		C,H,K,M,V	B, D, F	C, G	DAL2,IRC2,TEC
M8340107^3702%&	37,000		C,H,K,M,V	B, D	C, G	DAL2,IRC2,TEC
M8340107^3742%&	37,400	Link at Top	C,H,K,M,V	B, D, F	C, G	DAL2,IRC2,TEC
M8340107^3792%&	37,900		C,H,K,M,V	B, D	C, G	DAL2,IRC2,TEC
M8340107^3832%&	38,300		C,H,K,M,V	B, D, F	C, G	DAL2,IRC2,TEC
M8340107^3882%&	38,800		C,H,K,M,V	B, D	C, G	DAL2,IRC2,TEC
M8340107^3902%&	39,000		C,H,K,M,V	G, J	C, G	DAL2,IRC2,TEC
M8340107^3922%&	39,200	Link at Top	C,H,K,M,V	B, D, F	C, G	DAL2,IRC2,TEC
M8340107^3972%&	39,700		C,H,K,M,V	B, D	C, G	DAL2,IRC2,TEC
M8340107^4022%&	40,200		C,H,K,M,V	B, D, F	C, G	DAL2,IRC2,TEC
M8340107^4072%&	40,700		C,H,K,M,V	B, D	C, G	DAL2,IRC2,TEC
M8340107^4122%&	41,200		C,H,K,M,V	B, D, F	C, G	DAL2,IRC2,TEC
M8340107^4172%&	41,700	Link at Top	C,H,K,M,V	B, D	C, G	DAL2,IRC2,TEC
M8340107^4222%&	42,200		C,H,K,M,V	B, D, F	C, G	DAL2,IRC2,TEC
M8340107^4272%&	42,700		C,H,K,M,V	B, D	C, G	DAL2,IRC2,TEC
M8340107^4302%&	43,000		C,H,K,M,V	G, J	C, G	DAL2,IRC2,TEC
M8340107^4322%&	43,200		C,H,K,M,V	B, D, F	C, G	DAL2,IRC2,TEC
M8340107^4372%&	43,700	Link at Top	C,H,K,M,V	B, D	C, G	DAL2,IRC2,TEC
M8340107^4422%&	44,200		C,H,K,M,V	B, D, F	C, G	DAL2,IRC2,TEC
M8340107^4482%&	44,800		C,H,K,M,V	B, D	C, G	DAL2,IRC2,TEC
M8340107^4532%&	45,300		C,H,K,M,V	B, D, F	C, G	DAL2,IRC2,TEC
M8340107^4592%&	45,900		C,H,K,M,V	B, D	C, G	DAL2,IRC2,TEC
M8340107^4642%&	46,400	Link at Top	C,H,K,M,V	B, D, F	C, G	DAL2,IRC2,TEC
M8340107^4702%&	47,000		C,H,K,M,V	B, D, G, J	C, G	DAL2,IRC2,TEC
M8340107^4752%&	47,500		C,H,K,M,V	B, D, F	C, G	DAL2,IRC2,TEC
M8340107^4812%&	48,100		C,H,K,M,V	B, D	C, G	DAL2,IRC2,TEC

M8340107^4872%&	48,700		C,H,K,M,V	B, D, F	C, G	DAL2,IRC2,TEC
M8340107^4932%&	49,300	Link at Top	C,H,K,M,V	B, D	C, G	DAL2,IRC2,TEC
M8340107^4992%&	49,900		C,H,K,M,V	B, D, F	C, G	DAL2,IRC2,TEC
M8340107^5052%&	50,500		C,H,K,M,V	B, D	C, G	DAL2,IRC2,TEC
M8340107^5102%&	51,000		C,H,K,M,V	G, J	C, G	DAL2,IRC2,TEC
M8340107^5112%&	51,100		C,H,K,M,V	B, D, F	C, G	DAL2,IRC2,TEC
M8340107^5172%&	51,700	Link at Top	C,H,K,M,V	B, D	C, G	DAL2,IRC2,TEC
M8340107^5232%&	52,300		C,H,K,M,V	B, D, F	C, G	DAL2,IRC2,TEC
M8340107^5302%&	53,000		C,H,K,M,V	B, D	C, G	DAL2,IRC2,TEC
M8340107^5362%&	53,600		C,H,K,M,V	B, D, F	C, G	DAL2,IRC2,TEC
M8340107^5422%&	54,200		C,H,K,M,V	B, D	C, G	DAL2,IRC2,TEC
M8340107^5492%&	54,900	Link at Top	C,H,K,M,V	B, D, F	C, G	DAL2,IRC2,TEC
M8340107^5562%&	55,600		C,H,K,M,V	B, D	C, G	DAL2,IRC2,TEC
M8340107^5602%&	56,000		C,H,K,M,V	G, J	C, G	DAL2,IRC2,TEC
M8340107^5622%&	56,200		C,H,K,M,V	B, D, F	C, G	DAL2,IRC2,TEC
M8340107^5692%&	56,900		C,H,K,M,V	B, D	C, G	DAL2,IRC2,TEC
M8340107^5762%&	57,600	Link at Top	C,H,K,M,V	B, D, F	C, G	DAL2,IRC2,TEC
M8340107^5832%&	58,300		C,H,K,M,V	B, D	C, G	DAL2,IRC2,TEC
M8340107^5902%&	59,000		C,H,K,M,V	B, D, F	C, G	DAL2,IRC2,TEC
M8340107^5972%&	59,700		C,H,K,M,V	B, D	C, G	DAL2,IRC2,TEC
M8340107^6042%&	60,400		C,H,K,M,V	B, D, F	C, G	DAL2,IRC2,TEC
M8340107^6122%&	61,200	Link at Top	C,H,K,M,V	B, D	C, G	DAL2,IRC2,TEC
M8340107^6192%&	61,900		C,H,K,M,V	B, D, F	C, G	DAL2,IRC2,TEC
M8340107^6202%&	62,000		C,H,K,M,V	G, J	C, G	DAL2,IRC2,TEC
M8340107^6262%&	62,600		C,H,K,M,V	B, D	C, G	DAL2,IRC2,TEC
M8340107^6342%&	63,400		C,H,K,M,V	B, D, F	C, G	DAL2,IRC2,TEC
M8340107^6422%&	64,200	Link at Top	C,H,K,M,V	B, D	C, G	DAL2,IRC2,TEC
M8340107^6492%&	64,900		C,H,K,M,V	B, D, F	C, G	DAL2,IRC2,TEC
M8340107^6572%&	65,700		C,H,K,M,V	B, D	C, G	DAL2,IRC2,TEC
M8340107^6652%&	66,500		C,H,K,M,V	B, D, F	C, G	DAL2,IRC2,TEC
M8340107^6732%&	67,300		C,H,K,M,V	B, D	C, G	DAL2,IRC2,TEC
M8340107^6802%&	68,000	Link at Top	C,H,K,M,V	G, J	C, G	DAL2,IRC2,TEC
M8340107^6812%&	68,100		C,H,K,M,V	B, D, F	C, G	DAL2,IRC2,TEC
M8340107^6902%&	69,000		C,H,K,M,V	B, D	C, G	DAL2,IRC2,TEC
M8340107^6982%&	69,800		C,H,K,M,V	B, D, F	C, G	DAL2,IRC2,TEC
M8340107^7062%&	70,600		C,H,K,M,V	B, D	C, G	DAL2,IRC2,TEC
M8340107^7152%&	71,500	Link at Top	C,H,K,M,V	B, D, F	C, G	DAL2,IRC2,TEC
M8340107^7232%&	72,300		C,H,K,M,V	B, D	C, G	DAL2,IRC2,TEC
M8340107^7322%&	73,200		C,H,K,M,V	B, D, F	C, G	DAL2,IRC2,TEC
M8340107^7412%&	74,100		C,H,K,M,V	B, D	C, G	DAL2,IRC2,TEC
M8340107^7502%&	75,000		C,H,K,M,V	B, D, F, G, J	C, G	DAL2,IRC2,TEC
M8340107^7592%&	75,900	Link at Top	C,H,K,M,V	B, D	C, G	DAL2,IRC2,TEC
M8340107^7682%&	76,800		C,H,K,M,V	B, D, F	C, G	DAL2,IRC2,TEC
M8340107^7772%&	77,700		C,H,K,M,V	B, D	C, G	DAL2,IRC2,TEC
M8340107^7872%&	78,700		C,H,K,M,V	B, D, F	C, G	DAL2,IRC2,TEC
M8340107^7962%&	79,600		C,H,K,M,V	B, D	C, G	DAL2,IRC2,TEC
M8340107^8062%&	80,600	Link at Top	C,H,K,M,V	B, D, F	C, G	DAL2,IRC2,TEC

M8340107^8162%&	81,600		C,H,K,M,V	B, D	C, G	DAL2,IRC2,TEC
M8340107^8202%&	82,000		C,H,K,M,V	G, J	C, G	DAL2,IRC2,TEC
M8340107^8252%&	82,500		C,H,K,M,V	B, D, F	C, G	DAL2,IRC2,TEC
M8340107^8352%&	83,500		C,H,K,M,V	B, D	C, G	DAL2,IRC2,TEC
M8340107^8452%&	84,500	Link at Top	C,H,K,M,V	B, D, F	C, G	DAL2,IRC2,TEC
M8340107^8562%&	85,600		C,H,K,M,V	B, D	C, G	DAL2,IRC2,TEC
M8340107^8662%&	86,600		C,H,K,M,V	B, D, F	C, G	DAL2,IRC2,TEC
M8340107^8762%&	87,600		C,H,K,M,V	B, D	C, G	DAL2,IRC2,TEC
M8340107^8872%&	88,700		C,H,K,M,V	B, D, F	C, G	DAL2,IRC2,TEC
M8340107^8982%&	89,800	Link at Top	C,H,K,M,V	B, D	C, G	DAL2,IRC2,TEC
M8340107^9092%&	90,900		C,H,K,M,V	B, D, F	C, G	DAL2,IRC2,TEC
M8340107^9102%&	91,000		C,H,K,M,V	G, J	C, G	DAL2,IRC2,TEC
M8340107^9202%&	92,000		C,H,K,M,V	B, D	C, G	DAL2,IRC2,TEC
M8340107^9312%&	93,100		C,H,K,M,V	B, D, F	C, G	DAL2,IRC2,TEC
M8340107^9422%&	94,200	Link at Top	C,H,K,M,V	B, D	C, G	DAL2,IRC2,TEC
M8340107^9532%&	95,300		C,H,K,M,V	B, D, F	C, G	DAL2,IRC2,TEC
M8340107^9652%&	96,500		C,H,K,M,V	B, D	C, G	DAL2,IRC2,TEC
M8340107^9762%&	97,600		C,H,K,M,V	B, D, F	C, G	DAL2,IRC2,TEC
M8340107^9882%&	98,800		C,H,K,M,V	B, D	C, G	DAL2,IRC2,TEC
M8340107^1003%&	100,000	Link at Top	C,H,K,M,V	B, D, F, G, J	C, G	DAL2,IRC2,TEC
M8340107^1023%&	102,000		C,H,K,M,V	F	C, G	DAL2
M8340107^1053%&	105,000		C,H,K,M,V	F	C, G	DAL2
M8340107^1073%&	107,000		C,H,K,M,V	F	C, G	DAL2
M8340107^1103%&	110,000		C,H,K,M,V	F, G, J	C, G	DAL2
M8340107^1133%&	113,000	Link at Top	C,H,K,M,V	F	C, G	DAL2
M8340107^1153%&	115,000		C,H,K,M,V	F	C, G	DAL2
M8340107^1183%&	118,000		C,H,K,M,V	F	C, G	DAL2
M8340107^1203%&	120,000	Link at Top	C,H,K,M,V	F, G, J	C, G	DAL2
M8340107^1213%&	121,000		C,H,K,M,V	F	C, G	DAL2
M8340107^1243%&	124,000		C,H,K,M,V	F	C, G	DAL2
M8340107^1273%&	127,000	Link at Top	C,H,K,M,V	F	C, G	DAL2
M8340107^1303%&	130,000		C,H,K,M,V	F, G, J	C, G	DAL2
M8340107^1333%&	133,000		C,H,K,M,V	F	C, G	DAL2
M8340107^1373%&	137,000		C,H,K,M,V	F	C, G	DAL2
M8340107^1403%&	140,000		C,H,K,M,V	F	C, G	DAL2
M8340107^1433%&	143,000	Link at Top	C,H,K,M,V	F	C, G	DAL2
M8340107^1473%&	147,000		C,H,K,M,V	F	C, G	DAL2
M8340107^1503%&	150,000		C,H,K,M,V	F, G, J	C, G	DAL2
M8340107^1543%&	154,000		C,H,K,M,V	F	C, G	DAL2
M8340107^1583%&	158,000		C,H,K,M,V	F	C, G	DAL2
M8340107^1603%&	160,000		C,H,K,M,V	G, J	C, G	DAL2
M8340107^1623%&	162,000	Link at Top	C,H,K,M,V	F	C, G	DAL2
M8340107^1653%&	165,000		C,H,K,M,V	F	C, G	DAL2
M8340107^1693%&	169,000		C,H,K,M,V	F	C, G	DAL2
M8340107^1743%&	174,000		C,H,K,M,V	F	C, G	DAL2
M8340107^1783%&	178,000		C,H,K,M,V	F	C, G	DAL2
M8340107^1803%&	180,000		C,H,K,M,V	G, J	C, G	DAL2

M8340107^1823%&	182,000	Link at Top	C,H,K,M,V	F	C, G	DAL2
M8340107^1873%&	187,000		C,H,K,M,V	F	C, G	DAL2
M8340107^1913%&	191,000		C,H,K,M,V	F	C, G	DAL2
M8340107^1963%&	196,000		C,H,K,M,V	F	C, G	DAL2
M8340107^2003%&	200,000		C,H,K,M,V	F, G, J	C, G	DAL2
M8340107^2053%&	205,000	Link at Top	C,H,K,M,V	F	C, G	DAL2
M8340107^2103%&	210,000		C,H,K,M,V	F	C, G	DAL2
M8340107^2153%&	215,000		C,H,K,M,V	F	C, G	DAL2
M8340107^2183%&	218,000	Link at Top	C,H,K,M,V		C, G	DAL2
M8340107^2203%&	220,000		C,H,K,M,V	G, J	C, G	DAL2
M8340107^2213%&	221,000		C,H,K,M,V	F	C, G	DAL2
M8340107^2263%&	226,000		C,H,K,M,V	F	C, G	DAL2
M8340107^2323%&	232,000		C,H,K,M,V	F	C, G	DAL2
M8340107^2373%&	237,000		C,H,K,M,V	F	C, G	DAL2
M8340107^2403%&	240,000		C,H,K,M,V	F, G, J	C, G	DAL2
M8340107^2433%&	243,000	Link at Top	C,H,K,M,V	F	C, G	DAL2
M8340107^2493%&	249,000		C,H,K,M,V	F	C, G	DAL2
M8340107^2553%&	255,000		C,H,K,M,V	F	C, G	DAL2
M8340107^2613%&	261,000		C,H,K,M,V	F	C, G	DAL2
M8340107^2673%&	267,000		C,H,K,M,V	F	C, G	DAL2
M8340107^2703%&	270,000		C,H,K,M,V	G, J	C, G	DAL2
M8340107^2743%&	274,000		C,H,K,M,V	F	C, G	DAL2
M8340107^2803%&	280,000		C,H,K,M,V	F	C, G	DAL2
M8340107^2873%&	287,000	Link at Top	C,H,K,M,V	F	C, G	DAL2
M8340107^2943%&	294,000		C,H,K,M,V	F	C, G	DAL2
M8340107^3003%&	300,000		C,H,K,M,V	G, J	C, G	DAL2
M8340107^3013%&	301,000	Link at Top	C,H,K,M,V	F	C, G	DAL2
M8340107^3093%&	309,000		C,H,K,M,V	F	C, G	DAL2
M8340107^3163%&	316,000		C,H,K,M,V	F	C, G	DAL2
M8340107^3243%&	324,000		C,H,K,M,V	F	C, G	DAL2
M8340107^3303%&	330,000		C,H,K,M,V	G, J	C, G	DAL2
M8340107^3323%&	332,000		C,H,K,M,V	F	C, G	DAL2
M8340107^3403%&	340,000		C,H,K,M,V	F	C, G	DAL2
M8340107^3483%&	348,000		C,H,K,M,V	F	C, G	DAL2
M8340107^3573%&	357,000	Link at Top	C,H,K,M,V	F	C, G	DAL2
M8340107^3603%&	360,000		C,H,K,M,V	G, J	C, G	DAL2
M8340107^3653%&	365,000		C,H,K,M,V	F	C, G	DAL2
M8340107^3743%&	374,000	Link at Top	C,H,K,M,V	F	C, G	DAL2
M8340107^3833%&	383,000		C,H,K,M,V	F	C, G	DAL2
M8340107^3903%&	390,000		C,H,K,M,V	G, J	C, G	DAL2
M8340107^3923%&	392,000	Link at Top	C,H,K,M,V	F	C, G	DAL2
M8340107^4023%&	402,000		C,H,K,M,V	F	C, G	DAL2
M8340107^4123%&	412,000		C,H,K,M,V	F	C, G	DAL2
M8340107^4223%&	422,000		C,H,K,M,V	F	C, G	DAL2
M8340107^4303%&	430,000		C,H,K,M,V	G, J	C, G	DAL2
M8340107^4323%&	432,000		C,H,K,M,V	F	C, G	DAL2
M8340107^4423%&	442,000		C,H,K,M,V	F	C, G	DAL2

M8340107^4533%&	453,000		C,H,K,M,V	F	C, G	DAL2
M8340107^4643%&	464,000	Link at Top	C,H,K,M,V	F	C, G	DAL2
M8340107^4703%&	470,000		C,H,K,M,V	G, J	C, G	DAL2
M8340107^4753%&	475,000		C,H,K,M,V	F	C, G	DAL2
M8340107^4873%&	487,000		C,H,K,M,V	F	C, G	DAL2
M8340107^4993%&	499,000		C,H,K,M,V	F	C, G	DAL2
M8340107^5103%&	510,000		C,H,K,M,V	G, J	C, G	DAL2
M8340107^5113%&	511,000		C,H,K,M,V	F	C, G	DAL2
M8340107^5233%&	523,000		C,H,K,M,V	F	C, G	DAL2
M8340107^5363%&	536,000		C,H,K,M,V	F	C, G	DAL2
M8340107^5493%&	549,000	Link at Top	C,H,K,M,V	F	C, G	DAL2
M8340107^5603%&	560,000		C,H,K,M,V	G, J	C, G	DAL2
M8340107^5623%&	562,000		C,H,K,M,V	F	C, G	DAL2
M8340107^5763%&	576,000	Link at Top	C,H,K,M,V	F	C, G	DAL2
M8340107^5903%&	590,000		C,H,K,M,V	F	C, G	DAL2
M8340107^6043%&	604,000		C,H,K,M,V	F	C, G	DAL2
M8340107^6193%&	619,000		C,H,K,M,V	F	C, G	DAL2
M8340107^6203%&	620,000		C,H,K,M,V	G, J	C, G	DAL2
M8340107^6343%&	634,000		C,H,K,M,V	F	C, G	DAL2
M8340107^6493%&	649,000		C,H,K,M,V	F	C, G	DAL2
M8340107^6653%&	665,000		C,H,K,M,V	F	C, G	DAL2
M8340107^6803%&	680,000	Link at Top	C,H,K,M,V	G, J	C, G	DAL2
M8340107^6813%&	681,000		C,H,K,M,V	F	C, G	DAL2
M8340107^6983%&	698,000		C,H,K,M,V	F	C, G	DAL2
M8340107^7153%&	715,000	Link at Top	C,H,K,M,V	F	C, G	DAL2
M8340107^7323%&	732,000		C,H,K,M,V	F	C, G	DAL2
M8340107^7503%&	750,000		C,H,K,M,V	F, G, J	C, G	DAL2
M8340107^7683%&	768,000		C,H,K,M,V	F	C, G	DAL2
M8340107^7873%&	787,000		C,H,K,M,V	F	C, G	DAL2
M8340107^8063%&	806,000	Link at Top	C,H,K,M,V	F	C, G	DAL2
M8340107^8203%&	820,000		C,H,K,M,V	G, J	C, G	DAL2
M8340107^8253%&	825,000		C,H,K,M,V	F	C, G	DAL2
M8340107^8453%&	845,000	Link at Top	C,H,K,M,V	F	C, G	DAL2
M8340107^8663%&	866,000		C,H,K,M,V	F	C, G	DAL2
M8340107^8873%&	887,000		C,H,K,M,V	F	C, G	DAL2
M8340107^9093%&	909,000		C,H,K,M,V	F	C, G	DAL2
M8340107^9103%&	910,000		C,H,K,M,V	G, J	C, G	DAL2
M8340107^9313%&	931,000		C,H,K,M,V	F	C, G	DAL2
M8340107^9533%&	953,000		C,H,K,M,V	F	C, G	DAL2
M8340107^9763%&	976,000		C,H,K,M,V	F	C, G	DAL2
M8340107^1004%&	1,000,000	Link at Top	C,H,K,M,V	F, G, J	C, G	DAL2

RZ070 RESISTORS

DECADE BREAKDOWN

Click on the link below to see the associated parts selection listing:

Resistance Range
10.0 Ohms through 97.6 Ohms
100 Ohms through 988 Ohms
1,000 Ohms through 9,880 Ohms
10,000 Ohms through 98,800 Ohms
100,000 Ohms through 1,000,000 Ohms

MIL-PRF-83401/7 (RZ070), RESISTOR NETWORKS

Fixed, Resistor Networks, Film

Schematic	Characteristic	Element Power Rating (W)	Network Power Rating (W)
C	C	0.06	0.3
C	H	0.12	0.6
C	K	0.12	0.6
C	M	0.12	0.6
C	V	0.06	0.3
G	C	0.06	0.18
G	H	0.12	0.36
G	K	0.12	0.36
G	M	0.12	0.36
G	V	0.06	0.18

Style RZ070

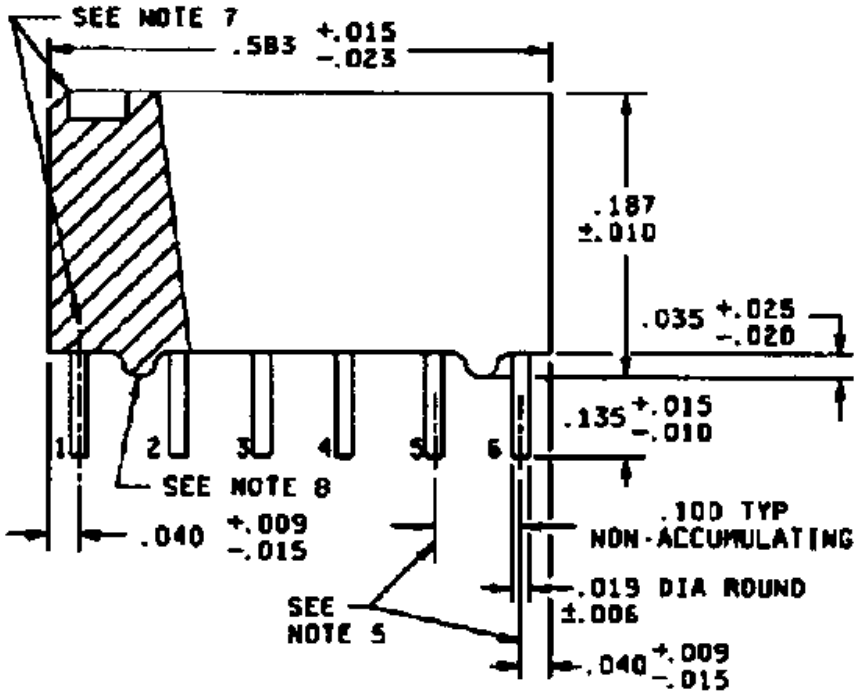

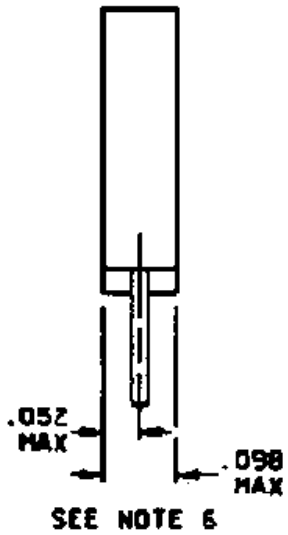

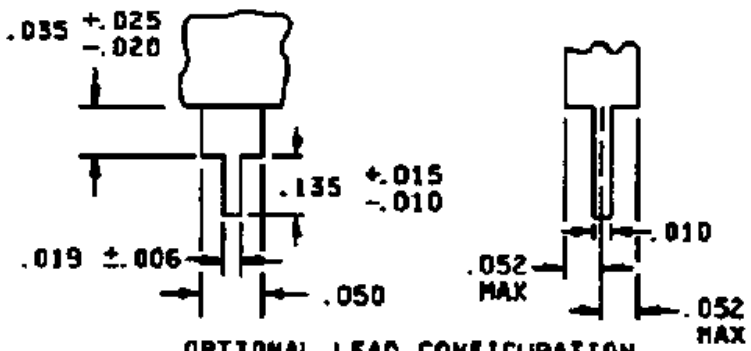

OPTIONAL LEAD CONFIGURATION
WITH STANDOFF AS PART OF LEAD
(SEE NOTE 8)

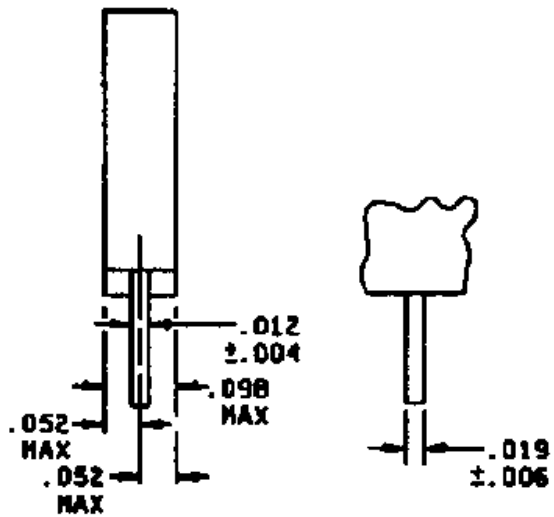

OPTIONAL LEAD CONFIGURATION
WITH STANDOFF AS PART OF BODY
(SEE NOTE 8)

Notes:

1) Dimensions are inches.

2) Metric equivalents are given for general information only.

3) Unless otherwise specified, tolerances are +/- 0.005 (0.13 mm).

4) The picturization of the styles above is given as representative of the envelope item. Slight deviations from the outline shown, which are contained within the envelope and do not alter the functional aspects of the device, are acceptable.

5) Terminal centerline to centerline measurements made at point of emergence of the lead from the body.

6) Measurement made at the point of emergence of the lead of the body.

7) Pin 1 locator shall be a dot, notch, striipe, or numeral 1 adjacent to pin no. 1, in the shaded area; also, additional marking may be placed on top edge where the bevel may be located.

8) If the standoffs are located on the body, a minimum of two standoffs are required as illustrated.

MIL-PRF-83401/7 (RZ070) Film Resistor Networks: 10.0 Ohms Through 97.6 Ohms

	Resistance	Power	Char.	Res.		
Part Number	Value (Ohms)	Rating	(^)	Tolerance	Schematic	Manufacturer
M8340107^10R0%&	10.0	See PN Ordering Section	C,H,K,M,V	F, G, J	C, G	DAL2
M8340107^10R2%&	10.2		C,H,K,M,V	F	C, G	DAL2
M8340107^10R5%&	10.5		C,H,K,M,V	F	C, G	DAL2
M8340107^10R7%&	10.7		C,H,K,M,V	F	C, G	DAL2
M8340107^11R0%&	11.0		C,H,K,M,V	F, G, J	C, G	DAL2
M8340107^11R3%&	11.3	See PN Ordering Section	C,H,K,M,V	F	C, G	DAL2
M8340107^11R5%&	11.5		C,H,K,M,V	F	C, G	DAL2
M8340107^11R8%&	11.8		C,H,K,M,V	F	C, G	DAL2
M8340107^12R0%&	12.0		C,H,K,M,V	F, G, J	C, G	DAL2
M8340107^12R1%&	12.1		C,H,K,M,V	F	C, G	DAL2
M8340107^12R4%&	12.4	See PN Ordering Section	C,H,K,M,V	F	C, G	DAL2
M8340107^12R7%&	12.7		C,H,K,M,V	F	C, G	DAL2
M8340107^13R0%&	13.0		C,H,K,M,V	F, G, J	C, G	DAL2
M8340107^13R3%&	13.3		C,H,K,M,V	F	C, G	DAL2
	Resistance	Power	Char.	Res.		
Part Number	Value (Ohms)	Rating	(^)	Tolerance	Schematic	Manufacturer
M8340107^13R7%&	13.7		C,H,K,M,V	F	C, G	DAL2
M8340107^14R0%&	14.0	See PN Ordering Section	C,H,K,M,V	F	C, G	DAL2
M8340107^14R3%&	14.3		C,H,K,M,V	F	C, G	DAL2
M8340107^14R7%&	14.7		C,H,K,M,V	F	C, G	DAL2
M8340107^15R0%&	15.0		C,H,K,M,V	F, G, J	C, G	DAL2
M8340107^15R4%&	15.4		C,H,K,M,V	F	C, G	DAL2
M8340107^15R8%&	15.8	See PN Ordering Section	C,H,K,M,V	F	C, G	DAL2

M8340107^16R0%&	16.0		C,H,K,M,V	G, J	C, G	DAL2
M8340107^16R2%&	16.2		C,H,K,M,V	F	C, G	DAL2
M8340107^16R5%&	16.5		C,H,K,M,V	F	C, G	DAL2
M8340107^16R9%&	16.9		C,H,K,M,V	F	C, G	DAL2
M8340107^17R4%&	17.4	See PN Ordering Section	C,H,K,M,V	F	C, G	DAL2
M8340107^17R8%&	17.8		C,H,K,M,V	F	C, G	DAL2
M8340107^18R0%&	18.0		C,H,K,M,V	G, J	C, G	DAL2
	Resistance	Power	Char.	Res.		
Part Number	Value (Ohms)	Rating	(^)	Tolerance	Schematic	Manufacturer
M8340107^18R2%&	18.2		C,H,K,M,V	F	C, G	DAL2
M8340107^18R7%&	18.7		C,H,K,M,V	F	C, G	DAL2
M8340107^19R1%&	19.1	See PN Ordering Section	C,H,K,M,V	F	C, G	DAL2
M8340107^19R6%&	19.6		C,H,K,M,V	F	C, G	DAL2
M8340107^20R0%&	20.0		C,H,K,M,V	F, G, J	C, G	DAL2
M8340107^20R5%&	20.5		C,H,K,M,V	F	C, G	DAL2
M8340107^21R0%&	21.0		C,H,K,M,V	F	C, G	DAL2
M8340107^21R5%&	21.5	See PN Ordering Section	C,H,K,M,V	F	C, G	DAL2
M8340107^22R0%&	22.0		C,H,K,M,V	G, J	C, G	DAL2
M8340107^22R1%&	22.1		C,H,K,M,V	F	C, G	DAL2
M8340107^22R6%&	22.6		C,H,K,M,V	F	C, G	DAL2
M8340107^23R2%&	23.2		C,H,K,M,V	F	C, G	DAL2
M8340107^23R7%&	23.7	See PN Ordering Section	C,H,K,M,V	F	C, G	DAL2
M8340107^24R0%&	24.0		C,H,K,M,V	F, G, J	C, G	DAL2
	Resistance	Power	Char.	Res.		
Part Number	Value (Ohms)	Rating	(^)	Tolerance	Schematic	Manufacturer
M8340107^24R3%&	24.3		C,H,K,M,V	F	C, G	DAL2
M8340107^24R9%&	24.9		C,H,K,M,V	F	C, G	DAL2
M8340107^25R5%&	25.5		C,H,K,M,V	F	C, G	DAL2
M8340107^26R1%&	26.1	See PN Ordering Section	C,H,K,M,V	F	C, G	DAL2
M8340107^26R7%&	26.7		C,H,K,M,V	F	C, G	DAL2
M8340107^27R0%&	27.0		C,H,K,M,V	G, J	C, G	DAL2,TEC
M8340107^27R4%&	27.4		C,H,K,M,V	F	C, G	DAL2,TEC
M8340107^28R0%&	28.0		C,H,K,M,V	F	C, G	DAL2,TEC
M8340107^28R7%&	28.7	See PN Ordering Section	C,H,K,M,V	F	C, G	DAL2,TEC
M8340107^29R4%&	29.4		C,H,K,M,V	F	C, G	DAL2,TEC
M8340107^30R0%&	30.0		C,H,K,M,V	G, J	C, G	DAL2,TEC
M8340107^30R1%&	30.1		C,H,K,M,V	F	C, G	DAL2,TEC
M8340107^30R9%&	30.9		C,H,K,M,V	F	C, G	DAL2,TEC
M8340107^31R6%&	31.6	See PN Ordering Section	C,H,K,M,V	F	C, G	DAL2,TEC
	Resistance	Power	Char.	Res.		
Part Number	Value (Ohms)	Rating	(^)	Tolerance	Schematic	Manufacturer
M8340107^32R4%&	32.4		C,H,K,M,V	F	C, G	DAL2,TEC
M8340107^33R0%&	33.0		C,H,K,M,V	G, J	C, G	DAL2,TEC
M8340107^33R2%&	33.2		C,H,K,M,V	F	C, G	DAL2,TEC
M8340107^34R0%&	34.0		C,H,K,M,V	F	C, G	DAL2,TEC
M8340107^34R8%&	34.8	See PN Ordering Section	C,H,K,M,V	F	C, G	DAL2,TEC
M8340107^35R7%&	35.7		C,H,K,M,V	F	C, G	DAL2,TEC

M8340107^36R0%&	36.0		C,H,K,M,V	G, J	C, G	DAL2,TEC
M8340107^36R5%&	36.5		C,H,K,M,V	F	C, G	DAL2,TEC
M8340107^37R4%&	37.4		C,H,K,M,V	F	C, G	DAL2,TEC
M8340107^38R3%&	38.3	See PN Ordering Section	C,H,K,M,V	F	C, G	DAL2,TEC
M8340107^39R0%&	39.0		C,H,K,M,V	G, J	C, G	DAL2,TEC
M8340107^39R2%&	39.2		C,H,K,M,V	F	C, G	DAL2,TEC
M8340107^40R2%&	40.2		C,H,K,M,V	F	C, G	DAL2,TEC
M8340107^41R2%&	41.2		C,H,K,M,V	F	C, G	DAL2,TEC
	Resistance	Power	Char.	Res.		
Part Number	Value (Ohms)	Rating	(^)	Tolerance	Schematic	Manufacturer
M8340107^42R2%&	42.2	See PN Ordering Section	C,H,K,M,V	F	C, G	DAL2,TEC
M8340107^43R0%&	43.0		C,H,K,M,V	G, J	C, G	DAL2,TEC
M8340107^43R2%&	43.2		C,H,K,M,V	F	C, G	DAL2,TEC
M8340107^44R2%&	44.2		C,H,K,M,V	F	C, G	DAL2,TEC
M8340107^45R3%&	45.3		C,H,K,M,V	F	C, G	DAL2,TEC
M8340107^46R4%&	46.4	See PN Ordering Section	C,H,K,M,V	F	C, G	DAL2,TEC
M8340107^47R0%&	47.0		C,H,K,M,V	G, J	C, G	DAL2,TEC
M8340107^47R5%&	47.5		C,H,K,M,V	F	C, G	DAL2,TEC
M8340107^48R7%&	48.7		C,H,K,M,V	F	C, G	DAL2,TEC
M8340107^49R9%&	49.9		C,H,K,M,V	F	C, G	DAL2,TEC
M8340107^51R0%&	51.0	See PN Ordering Section	C,H,K,M,V	G, J	C, G	DAL2,TEC
M8340107^51R1%&	51.1		C,H,K,M,V	F	C, G	DAL2,TEC
M8340107^52R3%&	52.3		C,H,K,M,V	F	C, G	DAL2,TEC
M8340107^53R6%&	53.6		C,H,K,M,V	F	C, G	DAL2,TEC
	Resistance	Power	Char.	Res.		
Part Number	Value (Ohms)	Rating	(^)	Tolerance	Schematic	Manufacturer
M8340107^54R9%&	54.9		C,H,K,M,V	F	C, G	DAL2,TEC
M8340107^56R0%&	56.0	See PN Ordering Section	C,H,K,M,V	G, J	C, G	DAL2,TEC
M8340107^56R2%&	56.2		C,H,K,M,V	F	C, G	DAL2,TEC
M8340107^57R6%&	57.6		C,H,K,M,V	F	C, G	DAL2,TEC
M8340107^59R0%&	59.0		C,H,K,M,V	F	C, G	DAL2,TEC
M8340107^60R4%&	60.4		C,H,K,M,V	F	C, G	DAL2,TEC
M8340107^61R9%&	61.9	See PN Ordering Section	C,H,K,M,V	F	C, G	DAL2,TEC
M8340107^62R0%&	62.0		C,H,K,M,V	G, J	C, G	DAL2,TEC
M8340107^63R4%&	63.4		C,H,K,M,V	F	C, G	DAL2,TEC
M8340107^64R9%&	64.9		C,H,K,M,V	F	C, G	DAL2,TEC
M8340107^66R5%&	66.5		C,H,K,M,V	F	C, G	DAL2,TEC
M8340107^68R0%&	68.0	See PN Ordering Section	C,H,K,M,V	G, J	C, G	DAL2,TEC
M8340107^68R1%&	68.1		C,H,K,M,V	F	C, G	DAL2,TEC
M8340107^69R8%&	69.8		C,H,K,M,V	F	C, G	DAL2,TEC
	Resistance	Power	Char.	Res.		
Part Number	Value (Ohms)	Rating	(^)	Tolerance	Schematic	Manufacturer
M8340107^71R5%&	71.5		C,H,K,M,V	F	C, G	DAL2,TEC
M8340107^73R2%&	73.2		C,H,K,M,V	F	C, G	DAL2,TEC
M8340107^75R0%&	75.0	See PN Ordering Section	C,H,K,M,V	F, G, J	C, G	DAL2,TEC
M8340107^76R8%&	76.8		C,H,K,M,V	F	C, G	DAL2,TEC
M8340107^78R7%&	78.7		C,H,K,M,V	F	C, G	DAL2,TEC

M8340107^80R6%&	80.6		C,H,K,M,V	F	C, G	DAL2,TEC
M8340107^82R0%&	82.0		C,H,K,M,V	G, J	C, G	DAL2,TEC
M8340107^82R5%&	82.5	See PN Ordering Section	C,H,K,M,V	F	C, G	DAL2,TEC
M8340107^84R5%&	84.5		C,H,K,M,V	F	C, G	DAL2,TEC
M8340107^86R6%&	86.6		C,H,K,M,V	F	C, G	DAL2,TEC
M8340107^88R7%&	88.7		C,H,K,M,V	F	C, G	DAL2,TEC
M8340107^90R9%&	90.9		C,H,K,M,V	F	C, G	DAL2,TEC
M8340107^91R0%&	91.0	See PN Ordering Section	C,H,K,M,V	G, J	C, G	DAL2,TEC
M8340107^93R1%&	93.1		C,H,K,M,V	F	C, G	DAL2,TEC
	Resistance	Power	Char.	Res.		
Part Number	Value (Ohms)	Rating	(^)	Tolerance	Schematic	Manufacturer
M8340107^95R3%&	95.3		C,H,K,M,V	F	C, G	DAL2,TEC
M8340107^97R6%&	97.6		C,H,K,M,V	F	C, G	DAL2,TEC

MIL-PRF-83401/7 (RZ070) Film Resistor Networks: 100 Ohms Through 988 Ohms

	Resistance	Power	Char.	Res.		
Part Number	Value (Ohms)	Rating	(^)	Tolerance	Schematic	Manufacturer
M8340107^1000%&	100		C,H,K,M,V	B, D, F, G, J	C, G	DAL2,IRC2,TEC
M8340107^1010%&	101	See PN Ordering Section	C,H,K,M,V	B, D	C, G	DAL2,IRC2,TEC
M8340107^1020%&	102		C,H,K,M,V	B, D, F	C, G	DAL2,IRC2,TEC
M8340107^1040%&	104		C,H,K,M,V	B, D	C, G	DAL2,IRC2,TEC
M8340107^1050%&	105		C,H,K,M,V	B, D, F	C, G	DAL2,IRC2,TEC
M8340107^1060%&	106		C,H,K,M,V	B, D	C, G	DAL2,IRC2,TEC
M8340107^1070%&	107	See PN Ordering Section	C,H,K,M,V	B, D, F	C, G	DAL2,IRC2,TEC
M8340107^1090%&	109		C,H,K,M,V	B, D	C, G	DAL2,IRC2,TEC
M8340107^1100%&	110		C,H,K,M,V	B, D, F, G, J	C, G	DAL2,IRC2,TEC
M8340107^1110%&	111		C,H,K,M,V	B, D	C, G	DAL2,IRC2,TEC
M8340107^1130%&	113		C,H,K,M,V	B, D, F	C, G	DAL2,IRC2,TEC
M8340107^1140%&	114	See PN Ordering Section	C,H,K,M,V	B, D	C, G	DAL2,IRC2,TEC
M8340107^1150%&	115		C,H,K,M,V	B, D, F	C, G	DAL2,IRC2,TEC
M8340107^1170%&	117		C,H,K,M,V	B, D	C, G	DAL2,IRC2,TEC
	Resistance	Power	Char.	Res.		
Part Number	Value (Ohms)	Rating	(^)	Tolerance	Schematic	Manufacturer
M8340107^1180%&	118		C,H,K,M,V	B, D, F	C, G	DAL2,IRC2,TEC
M8340107^1200%&	120		C,H,K,M,V	B, D, F, G, J	C, G	DAL2,IRC2,TEC
M8340107^1210%&	121	See PN Ordering Section	C,H,K,M,V	B, D, F	C, G	DAL2,IRC2,TEC
M8340107^1230%&	123		C,H,K,M,V	B, D	C, G	DAL2,IRC2,TEC
M8340107^1240%&	124		C,H,K,M,V	B, D, F	C, G	DAL2,IRC2,TEC
M8340107^1260%&	126		C,H,K,M,V	B, D	C, G	DAL2,IRC2,TEC
M8340107^1270%&	127		C,H,K,M,V	B, D, F	C, G	DAL2,IRC2,TEC
M8340107^1290%&	129	See PN Ordering Section	C,H,K,M,V	B, D	C, G	DAL2,IRC2,TEC
M8340107^1300%&	130		C,H,K,M,V	B, D, F, G, J	C, G	DAL2,IRC2,TEC
M8340107^1320%&	132		C,H,K,M,V	B, D	C, G	DAL2,IRC2,TEC
M8340107^1330%&	133		C,H,K,M,V	B, D, F	C, G	DAL2,IRC2,TEC

M8340107^1350%&	135	See PN Ordering Section	C,H,K,M,V	B, D	C, G	DAL2,IRC2,TEC
M8340107^1370%&	137		C,H,K,M,V	B, D, F	C, G	DAL2,IRC2,TEC
M8340107^1380%&	138		C,H,K,M,V	B, D	C, G	DAL2,IRC2,TEC
	Resistance	Power	Char.	Res.		
Part Number	Value (Ohms)	Rating	(^)	Tolerance	Schematic	Manufacturer
M8340107^1400%&	140		C,H,K,M,V	B, D, F	C, G	DAL2,IRC2,TEC
M8340107^1420%&	142		C,H,K,M,V	B, D	C, G	DAL2,IRC2,TEC
M8340107^1430%&	143	See PN Ordering Section	C,H,K,M,V	B, D, F	C, G	DAL2,IRC2,TEC
M8340107^1450%&	145		C,H,K,M,V	B, D	C, G	DAL2,IRC2,TEC
M8340107^1470%&	147		C,H,K,M,V	B, D, F	C, G	DAL2,IRC2,TEC
M8340107^1490%&	149		C,H,K,M,V	B, D	C, G	DAL2,IRC2,TEC
M8340107^1500%&	150		C,H,K,M,V	B, D, F, G, J	C, G	DAL2,IRC2,TEC
M8340107^1520%&	152	See PN Ordering Section	C,H,K,M,V	B, D	C, G	DAL2,IRC2,TEC
M8340107^1540%&	154		C,H,K,M,V	B, D, F	C, G	DAL2,IRC2,TEC
M8340107^1560%&	156		C,H,K,M,V	B, D	C, G	DAL2,IRC2,TEC
M8340107^1580%&	158		C,H,K,M,V	B, D, F	C, G	DAL2,IRC2,TEC
M8340107^1600%&	160		C,H,K,M,V	B, D, G, J	C, G	DAL2,IRC2,TEC
M8340107^1620%&	162	See PN Ordering Section	C,H,K,M,V	B, D, F	C, G	DAL2,IRC2,TEC
M8340107^1640%&	164		C,H,K,M,V	B, D	C, G	DAL2,IRC2,TEC
	Resistance	Power	Char.	Res.		
Part Number	Value (Ohms)	Rating	(^)	Tolerance	Schematic	Manufacturer
M8340107^1650%&	165		C,H,K,M,V	B, D, F	C, G	DAL2,IRC2,TEC
M8340107^1670%&	167		C,H,K,M,V	B, D	C, G	DAL2,IRC2,TEC
M8340107^1690%&	169		C,H,K,M,V	B, D, F	C, G	DAL2,IRC2,TEC
M8340107^1720%&	172	See PN Ordering Section	C,H,K,M,V	B, D	C, G	DAL2,IRC2,TEC
M8340107^1740%&	174		C,H,K,M,V	B, D, F	C, G	DAL2,IRC2,TEC
M8340107^1760%&	176		C,H,K,M,V	B, D	C, G	DAL2,IRC2,TEC
M8340107^1780%&	178		C,H,K,M,V	B, D, F	C, G	DAL2,IRC2,TEC
M8340107^1800%&	180		C,H,K,M,V	B, D, G, J	C, G	DAL2,IRC2,TEC
M8340107^1820%&	182	See PN Ordering Section	C,H,K,M,V	B, D, F	C, G	DAL2,IRC2,TEC
M8340107^1840%&	184		C,H,K,M,V	B, D	C, G	DAL2,IRC2,TEC
M8340107^1870%&	187		C,H,K,M,V	B, D, F	C, G	DAL2,IRC2,TEC
M8340107^1890%&	189		C,H,K,M,V	B, D	C, G	DAL2,IRC2,TEC
M8340107^1910%&	191		C,H,K,M,V	B, D, F	C, G	DAL2,IRC2,TEC
M8340107^1930%&	193	See PN Ordering Section	C,H,K,M,V	B, D	C, G	DAL2,IRC2,TEC
	Resistance	Power	Char.	Res.		
Part Number	Value (Ohms)	Rating	(^)	Tolerance	Schematic	Manufacturer
M8340107^1960%&	196		C,H,K,M,V	B, D, F	C, G	DAL2,IRC2,TEC
M8340107^1980%&	198		C,H,K,M,V	B, D	C, G	DAL2,IRC2,TEC
M8340107^2000%&	200		C,H,K,M,V	B, D, F, G, J	C, G	DAL2,IRC2,TEC
M8340107^2030%&	203		C,H,K,M,V	B, D	C, G	DAL2,IRC2,TEC
M8340107^2050%&	205	See PN Ordering Section	C,H,K,M,V	B, D, F	C, G	DAL2,IRC2,TEC
M8340107^2080%&	208		C,H,K,M,V	B, D	C, G	DAL2,IRC2,TEC
M8340107^2100%&	210		C,H,K,M,V	B, D, F	C, G	DAL2,IRC2,TEC
M8340107^2130%&	213		C,H,K,M,V	B, D	C, G	DAL2,IRC2,TEC
M8340107^2150%&	215		C,H,K,M,V	B, D, F	C, G	DAL2,IRC2,TEC
M8340107^2180%&	218	See PN Ordering Section	C,H,K,M,V	B, D	C, G	DAL2,IRC2,TEC

M8340107^2200%&	220		C,H,K,M,V	G, J	C, G	DAL2,IRC2,TEC
M8340107^2210%&	221		C,H,K,M,V	B, D, F	C, G	DAL2,IRC2,TEC
M8340107^2230%&	223		C,H,K,M,V	B, D	C, G	DAL2,IRC2,TEC
M8340107^2260%&	226		C,H,K,M,V	B, D, F	C, G	DAL2,IRC2,TEC
	Resistance	Power	Char.	Res.		
Part Number	Value (Ohms)	Rating	(^)	Tolerance	Schematic	Manufacturer
M8340107^2290%&	229	See PN Ordering Section	C,H,K,M,V	B, D	C, G	DAL2,IRC2,TEC
M8340107^2320%&	232		C,H,K,M,V	B, D, F	C, G	DAL2,IRC2,TEC
M8340107^2340%&	234		C,H,K,M,V	B, D	C, G	DAL2,IRC2,TEC
M8340107^2370%&	237		C,H,K,M,V	B, D, F	C, G	DAL2,IRC2,TEC
M8340107^2400%&	240		C,H,K,M,V	B, D, F, G, J	C, G	DAL2,IRC2,TEC
M8340107^2430%&	243	See PN Ordering Section	C,H,K,M,V	B, D, F	C, G	DAL2,IRC2,TEC
M8340107^2460%&	246		C,H,K,M,V	B, D	C, G	DAL2,IRC2,TEC
M8340107^2490%&	249		C,H,K,M,V	B, D, F	C, G	DAL2,IRC2,TEC
M8340107^2520%&	252		C,H,K,M,V	B, D	C, G	DAL2,IRC2,TEC
M8340107^2550%&	255		C,H,K,M,V	B, D, F	C, G	DAL2,IRC2,TEC
M8340107^2580%&	258	See PN Ordering Section	C,H,K,M,V	B, D	C, G	DAL2,IRC2,TEC
M8340107^2610%&	261		C,H,K,M,V	B, D, F	C, G	DAL2,IRC2,TEC
M8340107^2640%&	264		C,H,K,M,V	B, D	C, G	DAL2,IRC2,TEC
M8340107^2670%&	267		C,H,K,M,V	B, D, F	C, G	DAL2,IRC2,TEC
	Resistance	Power	Char.	Res.		
Part Number	Value (Ohms)	Rating	(^)	Tolerance	Schematic	Manufacturer
M8340107^2700%&	270		C,H,K,M,V	G, J	C, G	DAL2,IRC2,TEC
M8340107^2710%&	271	See PN Ordering Section	C,H,K,M,V	B, D	C, G	DAL2,IRC2,TEC
M8340107^2740%&	274		C,H,K,M,V	B, D, F	C, G	DAL2,IRC2,TEC
M8340107^2770%&	277		C,H,K,M,V	B, D	C, G	DAL2,IRC2,TEC
M8340107^2800%&	280		C,H,K,M,V	B, D, F	C, G	DAL2,IRC2,TEC
M8340107^2840%&	284		C,H,K,M,V	B, D	C, G	DAL2,IRC2,TEC
M8340107^2870%&	287	See PN Ordering Section	C,H,K,M,V	B, D, F	C, G	DAL2,IRC2,TEC
M8340107^2910%&	291		C,H,K,M,V	B, D	C, G	DAL2,IRC2,TEC
M8340107^2940%&	294		C,H,K,M,V	B, D, F	C, G	DAL2,IRC2,TEC
M8340107^2980%&	298		C,H,K,M,V	B, D	C, G	DAL2,IRC2,TEC
M8340107^3000%&	300		C,H,K,M,V	G, J	C, G	DAL2,IRC2,TEC
M8340107^3010%&	301	See PN Ordering Section	C,H,K,M,V	B, D, F	C, G	DAL2,IRC2,TEC
M8340107^3050%&	305		C,H,K,M,V	B, D	C, G	DAL2,IRC2,TEC
M8340107^3090%&	309		C,H,K,M,V	B, D, F	C, G	DAL2,IRC2,TEC
	Resistance	Power	Char.	Res.		
Part Number	Value (Ohms)	Rating	(^)	Tolerance	Schematic	Manufacturer
M8340107^3120%&	312		C,H,K,M,V	B, D	C, G	DAL2,IRC2,TEC
M8340107^3160%&	316		C,H,K,M,V	B, D, F	C, G	DAL2,IRC2,TEC
M8340107^3200%&	320	See PN Ordering Section	C,H,K,M,V	B, D	C, G	DAL2,IRC2,TEC
M8340107^3240%&	324		C,H,K,M,V	B, D, F	C, G	DAL2,IRC2,TEC
M8340107^3280%&	328		C,H,K,M,V	B, D	C, G	DAL2,IRC2,TEC
M8340107^3300%&	330		C,H,K,M,V	G, J	C, G	DAL2,IRC2,TEC
M8340107^3320%&	332		C,H,K,M,V	B, D, F	C, G	DAL2,IRC2,TEC
M8340107^3360%&	336	See PN Ordering Section	C,H,K,M,V	B, D	C, G	DAL2,IRC2,TEC
M8340107^3400%&	340		C,H,K,M,V	B, D, F	C, G	DAL2,IRC2,TEC

M8340107^3440%&	344		C,H,K,M,V	B, D	C, G	DAL2,IRC2,TEC
M8340107^3480%&	348		C,H,K,M,V	B, D, F	C, G	DAL2,IRC2,TEC
M8340107^3520%&	352		C,H,K,M,V	B, D	C, G	DAL2,IRC2,TEC
M8340107^3570%&	357	See PN Ordering Section	C,H,K,M,V	B, D, F	C, G	DAL2,IRC2,TEC
M8340107^3600%&	360		C,H,K,M,V	G, J	C, G	DAL2,IRC2,TEC
	Resistance	Power	Char.	Res.		
Part Number	Value (Ohms)	Rating	(^)	Tolerance	Schematic	Manufacturer
M8340107^3610%&	361		C,H,K,M,V	B, D	C, G	DAL2,IRC2,TEC
M8340107^3650%&	365		C,H,K,M,V	B, D, F	C, G	DAL2,IRC2,TEC
M8340107^3700%&	370		C,H,K,M,V	B, D	C, G	DAL2,IRC2,TEC
M8340107^3740%&	374	See PN Ordering Section	C,H,K,M,V	B, D, F	C, G	DAL2,IRC2,TEC
M8340107^3790%&	379		C,H,K,M,V	B, D	C, G	DAL2,IRC2,TEC
M8340107^3830%&	383		C,H,K,M,V	B, D, F	C, G	DAL2,IRC2,TEC
M8340107^3880%&	388		C,H,K,M,V	B, D	C, G	DAL2,IRC2,TEC
M8340107^3900%&	390		C,H,K,M,V	G, J	C, G	DAL2,IRC2,TEC
M8340107^3920%&	392	See PN Ordering Section	C,H,K,M,V	B, D, F	C, G	DAL2,IRC2,TEC
M8340107^3970%&	397		C,H,K,M,V	B, D	C, G	DAL2,IRC2,TEC
M8340107^4020%&	402		C,H,K,M,V	B, D, F	C, G	DAL2,IRC2,TEC
M8340107^4070%&	407		C,H,K,M,V	B, D	C, G	DAL2,IRC2,TEC
M8340107^4120%&	412		C,H,K,M,V	B, D, F	C, G	DAL2,IRC2,TEC
M8340107^4170%&	417	See PN Ordering Section	C,H,K,M,V	B, D	C, G	DAL2,IRC2,TEC
	Resistance	Power	Char.	Res.		
Part Number	Value (Ohms)	Rating	(^)	Tolerance	Schematic	Manufacturer
M8340107^4220%&	422		C,H,K,M,V	B, D, F	C, G	DAL2,IRC2,TEC
M8340107^4270%&	427		C,H,K,M,V	B, D	C, G	DAL2,IRC2,TEC
M8340107^4300%&	430		C,H,K,M,V	G, J	C, G	DAL2,IRC2,TEC
M8340107^4320%&	432		C,H,K,M,V	B, D, F	C, G	DAL2,IRC2,TEC
M8340107^4370%&	437	See PN Ordering Section	C,H,K,M,V	B, D	C, G	DAL2,IRC2,TEC
M8340107^4420%&	442		C,H,K,M,V	B, D, F	C, G	DAL2,IRC2,TEC
M8340107^4480%&	448		C,H,K,M,V	B, D	C, G	DAL2,IRC2,TEC
M8340107^4530%&	453		C,H,K,M,V	B, D, F	C, G	DAL2,IRC2,TEC
M8340107^4590%&	459		C,H,K,M,V	B, D	C, G	DAL2,IRC2,TEC
M8340107^4640%&	464	See PN Ordering Section	C,H,K,M,V	B, D, F	C, G	DAL2,IRC2,TEC
M8340107^4700%&	470		C,H,K,M,V	B, D, G, J	C, G	DAL2,IRC2,TEC
M8340107^4750%&	475		C,H,K,M,V	B, D, F	C, G	DAL2,IRC2,TEC
M8340107^4810%&	481		C,H,K,M,V	B, D	C, G	DAL2,IRC2,TEC
M8340107^4870%&	487		C,H,K,M,V	B, D, F	C, G	DAL2,IRC2,TEC
	Resistance	Power	Char.	Res.		
Part Number	Value (Ohms)	Rating	(^)	Tolerance	Schematic	Manufacturer
M8340107^4930%&	493	See PN Ordering Section	C,H,K,M,V	B, D	C, G	DAL2,IRC2,TEC
M8340107^4990%&	499		C,H,K,M,V	B, D, F	C, G	DAL2,IRC2,TEC
M8340107^5050%&	505		C,H,K,M,V	B, D	C, G	DAL2,IRC2,TEC
M8340107^5100%&	510		C,H,K,M,V	G, J	C, G	DAL2,IRC2,TEC
M8340107^5110%&	511		C,H,K,M,V	B, D, F	C, G	DAL2,IRC2,TEC
M8340107^5170%&	517	See PN Ordering Section	C,H,K,M,V	B, D	C, G	DAL2,IRC2,TEC
M8340107^5230%&	523		C,H,K,M,V	B, D, F	C, G	DAL2,IRC2,TEC
M8340107^5300%&	530		C,H,K,M,V	B, D	C, G	DAL2,IRC2,TEC

M8340107^5360%&	536		C,H,K,M,V	B, D, F	C, G	DAL2,IRC2,TEC
M8340107^5420%&	542		C,H,K,M,V	B, D	C, G	DAL2,IRC2,TEC
M8340107^5490%&	549	See PN Ordering Section	C,H,K,M,V	B, D, F	C, G	DAL2,IRC2,TEC
M8340107^5560%&	556		C,H,K,M,V	B, D	C, G	DAL2,IRC2,TEC
M8340107^5600%&	560		C,H,K,M,V	G, J	C, G	DAL2,IRC2,TEC
M8340107^5620%&	562		C,H,K,M,V	B, D, F	C, G	DAL2,IRC2,TEC
	Resistance	Power	Char.	Res.		
Part Number	Value (Ohms)	Rating	(^)	Tolerance	Schematic	Manufacturer
M8340107^5690%&	569		C,H,K,M,V	B, D	C, G	DAL2,IRC2,TEC
M8340107^5760%&	576	See PN Ordering Section	C,H,K,M,V	B, D, F	C, G	DAL2,IRC2,TEC
M8340107^5830%&	583		C,H,K,M,V	B, D	C, G	DAL2,IRC2,TEC
M8340107^5900%&	590		C,H,K,M,V	B, D, F	C, G	DAL2,IRC2,TEC
M8340107^5970%&	597		C,H,K,M,V	B, D	C, G	DAL2,IRC2,TEC
M8340107^6040%&	604		C,H,K,M,V	B, D, F	C, G	DAL2,IRC2,TEC
M8340107^6120%&	612	See PN Ordering Section	C,H,K,M,V	B, D	C, G	DAL2,IRC2,TEC
M8340107^6190%&	619		C,H,K,M,V	B, D, F	C, G	DAL2,IRC2,TEC
M8340107^6200%&	620		C,H,K,M,V	G, J	C, G	DAL2,IRC2,TEC
M8340107^6260%&	626		C,H,K,M,V	B, D	C, G	DAL2,IRC2,TEC
M8340107^6340%&	634		C,H,K,M,V	B, D, F	C, G	DAL2,IRC2,TEC
M8340107^6420%&	642	See PN Ordering Section	C,H,K,M,V	B, D	C, G	DAL2,IRC2,TEC
M8340107^6490%&	649		C,H,K,M,V	B, D, F	C, G	DAL2,IRC2,TEC
M8340107^6570%&	657		C,H,K,M,V	B, D	C, G	DAL2,IRC2,TEC
	Resistance	Power	Char.	Res.		
Part Number	Value (Ohms)	Rating	(^)	Tolerance	Schematic	Manufacturer
M8340107^6650%&	665		C,H,K,M,V	B, D, F	C, G	DAL2,IRC2,TEC
M8340107^6730%&	673		C,H,K,M,V	B, D	C, G	DAL2,IRC2,TEC
M8340107^6800%&	680	See PN Ordering Section	C,H,K,M,V	G, J	C, G	DAL2,IRC2,TEC
M8340107^6810%&	681		C,H,K,M,V	B, D, F	C, G	DAL2,IRC2,TEC
M8340107^6900%&	690		C,H,K,M,V	B, D	C, G	DAL2,IRC2,TEC
M8340107^6980%&	698		C,H,K,M,V	B, D, F	C, G	DAL2,IRC2,TEC
M8340107^7060%&	706		C,H,K,M,V	B, D	C, G	DAL2,IRC2,TEC
M8340107^7150%&	715	See PN Ordering Section	C,H,K,M,V	B, D, F	C, G	DAL2,IRC2,TEC
M8340107^7230%&	723		C,H,K,M,V	B, D	C, G	DAL2,IRC2,TEC
M8340107^7320%&	732		C,H,K,M,V	B, D, F	C, G	DAL2,IRC2,TEC
M8340107^7410%&	741		C,H,K,M,V	B, D	C, G	DAL2,IRC2,TEC
M8340107^7500%&	750		C,H,K,M,V	B, D, F, G, J	C, G	DAL2,IRC2,TEC
M8340107^7590%&	759	See PN Ordering Section	C,H,K,M,V	B, D	C, G	DAL2,IRC2,TEC
M8340107^7680%&	768		C,H,K,M,V	B, D, F	C, G	DAL2,IRC2,TEC
	Resistance	Power	Char.	Res.		
Part Number	Value (Ohms)	Rating	(^)	Tolerance	Schematic	Manufacturer
M8340107^7770%&	777		C,H,K,M,V	B, D	C, G	DAL2,IRC2,TEC
M8340107^7870%&	787		C,H,K,M,V	B, D, F	C, G	DAL2,IRC2,TEC
M8340107^7960%&	796		C,H,K,M,V	B, D	C, G	DAL2,IRC2,TEC
M8340107^8060%&	806	See PN Ordering Section	C,H,K,M,V	B, D, F	C, G	DAL2,IRC2,TEC
M8340107^8160%&	816		C,H,K,M,V	B, D	C, G	DAL2,IRC2,TEC
M8340107^8200%&	820		C,H,K,M,V	G, J	C, G	DAL2,IRC2,TEC
M8340107^8250%&	825		C,H,K,M,V	B, D, F	C, G	DAL2,IRC2,TEC

M8340107^8350%&	835		C,H,K,M,V	B, D	C, G	DAL2,IRC2,TEC
M8340107^8450%&	845	See PN Ordering Section	C,H,K,M,V	B, D, F	C, G	DAL2,IRC2,TEC
M8340107^8560%&	856		C,H,K,M,V	B, D	C, G	DAL2,IRC2,TEC
M8340107^8660%&	866		C,H,K,M,V	B, D, F	C, G	DAL2,IRC2,TEC
M8340107^8760%&	876		C,H,K,M,V	B, D	C, G	DAL2,IRC2,TEC
M8340107^8870%&	887		C,H,K,M,V	B, D, F	C, G	DAL2,IRC2,TEC
M8340107^8980%&	898	See PN Ordering Section	C,H,K,M,V	B, D	C, G	DAL2,IRC2,TEC
	Resistance	Power	Char.	Res.		
Part Number	Value (Ohms)	Rating	(^)	Tolerance	Schematic	Manufacturer
M8340107^9090%&	909		C,H,K,M,V	B, D, F	C, G	DAL2,IRC2,TEC
M8340107^9100%&	910		C,H,K,M,V	G, J	C, G	DAL2,IRC2,TEC
M8340107^9200%&	920		C,H,K,M,V	B, D	C, G	DAL2,IRC2,TEC
M8340107^9310%&	931		C,H,K,M,V	B, D, F	C, G	DAL2,IRC2,TEC
M8340107^9420%&	942	See PN Ordering Section	C,H,K,M,V	B, D	C, G	DAL2,IRC2,TEC
M8340107^9530%&	953		C,H,K,M,V	B, D, F	C, G	DAL2,IRC2,TEC
M8340107^9650%&	965		C,H,K,M,V	B, D	C, G	DAL2,IRC2,TEC
M8340107^9760%&	976		C,H,K,M,V	B, D, F	C, G	DAL2,IRC2,TEC
M8340107^9880%&	988		C,H,K,M,V	B, D	C, G	DAL2,IRC2,TEC

MIL-PRF-83401/7 (RZ070) Film Resistor Networks: 1,000 Ohms Through 9,880 Ohm
s

	Resistance	Power	Char.	Res.		
Part Number	Value (Ohms)	Rating	(^)	Tolerance	Schematic	Manufacturer
M8340107^1001%&	1,000	See PN Ordering Section	C,H,K,M,V	B, D, F, G, J	C, G	DAL2,IRC2,TEC
M8340107^1011%&	1,010		C,H,K,M,V	B, D	C, G	DAL2,IRC2,TEC
M8340107^1021%&	1,020		C,H,K,M,V	B, D, F	C, G	DAL2,IRC2,TEC
M8340107^1041%&	1,040		C,H,K,M,V	B, D	C, G	DAL2,IRC2,TEC
M8340107^1051%&	1,050		C,H,K,M,V	B, D, F	C, G	DAL2,IRC2,TEC
M8340107^1061%&	1,060	See PN Ordering Section	C,H,K,M,V	B, D	C, G	DAL2,IRC2,TEC
M8340107^1071%&	1,070		C,H,K,M,V	B, D, F	C, G	DAL2,IRC2,TEC
M8340107^1091%&	1,090		C,H,K,M,V	B, D	C, G	DAL2,IRC2,TEC
M8340107^1101%&	1,100		C,H,K,M,V	B, D, F, G, J	C, G	DAL2,IRC2,TEC
M8340107^1111%&	1,110		C,H,K,M,V	B, D	C, G	DAL2,IRC2,TEC
M8340107^1131%&	1,130	See PN Ordering Section	C,H,K,M,V	B, D, F	C, G	DAL2,IRC2,TEC
M8340107^1141%&	1,140		C,H,K,M,V	B, D	C, G	DAL2,IRC2,TEC
M8340107^1151%&	1,150		C,H,K,M,V	B, D, F	C, G	DAL2,IRC2,TEC
M8340107^1171%&	1,170		C,H,K,M,V	B, D	C, G	DAL2,IRC2,TEC
	Resistance	Power	Char.	Res.		
Part Number	Value (Ohms)	Rating	(^)	Tolerance	Schematic	Manufacturer
M8340107^1181%&	1,180		C,H,K,M,V	B, D, F	C, G	DAL2,IRC2,TEC
M8340107^1201%&	1,200	See PN Ordering Section	C,H,K,M,V	B, D, F, G, J	C, G	DAL2,IRC2,TEC
M8340107^1211%&	1,210		C,H,K,M,V	B, D, F	C, G	DAL2,IRC2,TEC
M8340107^1231%&	1,230		C,H,K,M,V	B, D	C, G	DAL2,IRC2,TEC
M8340107^1241%&	1,240		C,H,K,M,V	B, D, F	C, G	DAL2,IRC2,TEC

M8340107^1261%&	1,260		C,H,K,M,V	B, D	C, G	DAL2,IRC2,TEC
M8340107^1271%&	1,270	See PN Ordering Section	C,H,K,M,V	B, D, F	C, G	DAL2,IRC2,TEC
M8340107^1291%&	1,290		C,H,K,M,V	B, D	C, G	DAL2,IRC2,TEC
M8340107^1301%&	1,300		C,H,K,M,V	B, D, F, G, J	C, G	DAL2,IRC2,TEC
M8340107^1321%&	1,320		C,H,K,M,V	B, D	C, G	DAL2,IRC2,TEC
M8340107^1331%&	1,330		C,H,K,M,V	B, D, F	C, G	DAL2,IRC2,TEC
M8340107^1351%&	1,350	See PN Ordering Section	C,H,K,M,V	B, D	C, G	DAL2,IRC2,TEC
M8340107^1371%&	1,370		C,H,K,M,V	B, D, F	C, G	DAL2,IRC2,TEC
M8340107^1381%&	1,380		C,H,K,M,V	B, D	C, G	DAL2,IRC2,TEC
	Resistance	Power	Char.	Res.		
Part Number	Value (Ohms)	Rating	(^)	Tolerance	Schematic	Manufacturer
M8340107^1401%&	1,400		C,H,K,M,V	B, D, F	C, G	DAL2,IRC2,TEC
M8340107^1421%&	1,420		C,H,K,M,V	B, D	C, G	DAL2,IRC2,TEC
M8340107^1431%&	1,430	See PN Ordering Section	C,H,K,M,V	B, D, F	C, G	DAL2,IRC2,TEC
M8340107^1451%&	1,450		C,H,K,M,V	B, D	C, G	DAL2,IRC2,TEC
M8340107^1471%&	1,470		C,H,K,M,V	B, D, F	C, G	DAL2,IRC2,TEC
M8340107^1491%&	1,490		C,H,K,M,V	B, D	C, G	DAL2,IRC2,TEC
M8340107^1501%&	1,500		C,H,K,M,V	B, D, F, G, J	C, G	DAL2,IRC2,TEC
M8340107^1521%&	1,520	See PN Ordering Section	C,H,K,M,V	B, D	C, G	DAL2,IRC2,TEC
M8340107^1541%&	1,540		C,H,K,M,V	B, D, F	C, G	DAL2,IRC2,TEC
M8340107^1561%&	1,560		C,H,K,M,V	B, D	C, G	DAL2,IRC2,TEC
M8340107^1581%&	1,580		C,H,K,M,V	B, D, F	C, G	DAL2,IRC2,TEC
M8340107^1601%&	1,600		C,H,K,M,V	B, D, G, J	C, G	DAL2,IRC2,TEC
M8340107^1621%&	1,620	See PN Ordering Section	C,H,K,M,V	B, D, F	C, G	DAL2,IRC2,TEC
M8340107^1641%&	1,640		C,H,K,M,V	B, D	C, G	DAL2,IRC2,TEC
	Resistance	Power	Char.	Res.		
Part Number	Value (Ohms)	Rating	(^)	Tolerance	Schematic	Manufacturer
M8340107^1651%&	1,650		C,H,K,M,V	B, D, F	C, G	DAL2,IRC2,TEC
M8340107^1671%&	1,670		C,H,K,M,V	B, D	C, G	DAL2,IRC2,TEC
M8340107^1691%&	1,690		C,H,K,M,V	B, D, F	C, G	DAL2,IRC2,TEC
M8340107^1721%&	1,720	See PN Ordering Section	C,H,K,M,V	B, D	C, G	DAL2,IRC2,TEC
M8340107^1741%&	1,740		C,H,K,M,V	B, D, F	C, G	DAL2,IRC2,TEC
M8340107^1761%&	1,760		C,H,K,M,V	B, D	C, G	DAL2,IRC2,TEC
M8340107^1781%&	1,780		C,H,K,M,V	B, D, F	C, G	DAL2,IRC2,TEC
M8340107^1801%&	1,800		C,H,K,M,V	B, D, G, J	C, G	DAL2,IRC2,TEC
M8340107^1821%&	1,820	See PN Ordering Section	C,H,K,M,V	B, D, F	C, G	DAL2,IRC2,TEC
M8340107^1841%&	1,840		C,H,K,M,V	B, D	C, G	DAL2,IRC2,TEC
M8340107^1871%&	1,870		C,H,K,M,V	B, D, F	C, G	DAL2,IRC2,TEC
M8340107^1891%&	1,890		C,H,K,M,V	B, D	C, G	DAL2,IRC2,TEC
M8340107^1911%&	1,910		C,H,K,M,V	B, D, F	C, G	DAL2,IRC2,TEC
M8340107^1931%&	1,930	See PN Ordering Section	C,H,K,M,V	B, D	C, G	DAL2,IRC2,TEC
	Resistance	Power	Char.	Res.		
Part Number	Value (Ohms)	Rating	(^)	Tolerance	Schematic	Manufacturer
M8340107^1961%&	1,960		C,H,K,M,V	B, D, F	C, G	DAL2,IRC2,TEC
M8340107^1981%&	1,980		C,H,K,M,V	B, D	C, G	DAL2,IRC2,TEC
M8340107^2001%&	2,000		C,H,K,M,V	B, D, F, G, J	C, G	DAL2,IRC2,TEC
M8340107^2031%&	2,030		C,H,K,M,V	B, D	C, G	DAL2,IRC2,TEC

M8340107^2051%&	2,050	See PN Ordering Section	C,H,K,M,V	B, D, F	C, G	DAL2,IRC2,TEC
M8340107^2081%&	2,080		C,H,K,M,V	B, D	C, G	DAL2,IRC2,TEC
M8340107^2101%&	2,100		C,H,K,M,V	B, D, F	C, G	DAL2,IRC2,TEC
M8340107^2131%&	2,130		C,H,K,M,V	B, D	C, G	DAL2,IRC2,TEC
M8340107^2151%&	2,150		C,H,K,M,V	B, D, F	C, G	DAL2,IRC2,TEC
M8340107^2181%&	2,180	See PN Ordering Section	C,H,K,M,V	B, D	C, G	DAL2,IRC2,TEC
M8340107^2201%&	2,200		C,H,K,M,V	G, J	C, G	DAL2,IRC2,TEC
M8340107^2211%&	2,210		C,H,K,M,V	B, D, F	C, G	DAL2,IRC2,TEC
M8340107^2231%&	2,230		C,H,K,M,V	B, D	C, G	DAL2,IRC2,TEC
M8340107^2261%&	2,260		C,H,K,M,V	B, D, F	C, G	DAL2,IRC2,TEC
	Resistance	Power	Char.	Res.		
Part Number	Value (Ohms)	Rating	(^)	Tolerance	Schematic	Manufacturer
M8340107^2291%&	2,290	See PN Ordering Section	C,H,K,M,V	B, D	C, G	DAL2,IRC2,TEC
M8340107^2321%&	2,320		C,H,K,M,V	B, D, F	C, G	DAL2,IRC2,TEC
M8340107^2341%&	2,340		C,H,K,M,V	B, D	C, G	DAL2,IRC2,TEC
M8340107^2371%&	2,370		C,H,K,M,V	B, D, F	C, G	DAL2,IRC2,TEC
M8340107^2401%&	2,400		C,H,K,M,V	B, D, F, G, J	C, G	DAL2,IRC2,TEC
M8340107^2431%&	2,430	See PN Ordering Section	C,H,K,M,V	B, D, F	C, G	DAL2,IRC2,TEC
M8340107^2461%&	2,460		C,H,K,M,V	B, D	C, G	DAL2,IRC2,TEC
M8340107^2491%&	2,490		C,H,K,M,V	B, D, F	C, G	DAL2,IRC2,TEC
M8340107^2521%&	2,520		C,H,K,M,V	B, D	C, G	DAL2,IRC2,TEC
M8340107^2551%&	2,550		C,H,K,M,V	B, D, F	C, G	DAL2,IRC2,TEC
M8340107^2581%&	2,580	See PN Ordering Section	C,H,K,M,V	B, D	C, G	DAL2,IRC2,TEC
M8340107^2611%&	2,610		C,H,K,M,V	B, D, F	C, G	DAL2,IRC2,TEC
M8340107^2641%&	2,640		C,H,K,M,V	B, D	C, G	DAL2,IRC2,TEC
M8340107^2671%&	2,670		C,H,K,M,V	B, D, F	C, G	DAL2,IRC2,TEC
	Resistance	Power	Char.	Res.		
Part Number	Value (Ohms)	Rating	(^)	Tolerance	Schematic	Manufacturer
M8340107^2701%&	2,700		C,H,K,M,V	G, J	C, G	DAL2,IRC2,TEC
M8340107^2711%&	2,710	See PN Ordering Section	C,H,K,M,V	B, D	C, G	DAL2,IRC2,TEC
M8340107^2741%&	2,740		C,H,K,M,V	B, D, F	C, G	DAL2,IRC2,TEC
M8340107^2771%&	2,770		C,H,K,M,V	B, D	C, G	DAL2,IRC2,TEC
M8340107^2801%&	2,800		C,H,K,M,V	B, D, F	C, G	DAL2,IRC2,TEC
M8340107^2841%&	2,840		C,H,K,M,V	B, D	C, G	DAL2,IRC2,TEC
M8340107^2871%&	2,870	See PN Ordering Section	C,H,K,M,V	B, D, F	C, G	DAL2,IRC2,TEC
M8340107^2911%&	2,910		C,H,K,M,V	B, D	C, G	DAL2,IRC2,TEC
M8340107^2941%&	2,940		C,H,K,M,V	B, D, F	C, G	DAL2,IRC2,TEC
M8340107^2981%&	2,980		C,H,K,M,V	B, D	C, G	DAL2,IRC2,TEC
M8340107^3001%&	3,000		C,H,K,M,V	G, J	C, G	DAL2,IRC2,TEC
M8340107^3011%&	3,010	See PN Ordering Section	C,H,K,M,V	B, D, F	C, G	DAL2,IRC2,TEC
M8340107^3051%&	3,050		C,H,K,M,V	B, D	C, G	DAL2,IRC2,TEC
M8340107^3091%&	3,090		C,H,K,M,V	B, D, F	C, G	DAL2,IRC2,TEC
	Resistance	Power	Char.	Res.		
Part Number	Value (Ohms)	Rating	(^)	Tolerance	Schematic	Manufacturer
M8340107^3121%&	3,120		C,H,K,M,V	B, D	C, G	DAL2,IRC2,TEC
M8340107^3161%&	3,160		C,H,K,M,V	B, D, F	C, G	DAL2,IRC2,TEC
M8340107^3201%&	3,200	See PN Ordering Section	C,H,K,M,V	B, D	C, G	DAL2,IRC2,TEC

M8340107^3241%&	3,240		C,H,K,M,V	B, D, F	C, G	DAL2,IRC2,TEC
M8340107^3281%&	3,280		C,H,K,M,V	B, D	C, G	DAL2,IRC2,TEC
M8340107^3301%&	3,300		C,H,K,M,V	G, J	C, G	DAL2,IRC2,TEC
M8340107^3321%&	3,320		C,H,K,M,V	B, D, F	C, G	DAL2,IRC2,TEC
M8340107^3361%&	3,360	See PN Ordering Section	C,H,K,M,V	B, D	C, G	DAL2,IRC2,TEC
M8340107^3401%&	3,400		C,H,K,M,V	B, D, F	C, G	DAL2,IRC2,TEC
M8340107^3441%&	3,440		C,H,K,M,V	B, D	C, G	DAL2,IRC2,TEC
M8340107^3481%&	3,480		C,H,K,M,V	B, D, F	C, G	DAL2,IRC2,TEC
M8340107^3521%&	3,520		C,H,K,M,V	B, D	C, G	DAL2,IRC2,TEC
M8340107^3571%&	3,570	See PN Ordering Section	C,H,K,M,V	B, D, F	C, G	DAL2,IRC2,TEC
M8340107^3601%&	3,600		C,H,K,M,V	G, J	C, G	DAL2,IRC2,TEC
	Resistance	Power	Char.	Res.		
Part Number	Value (Ohms)	Rating	(^)	Tolerance	Schematic	Manufacturer
M8340107^3611%&	3,610		C,H,K,M,V	B, D	C, G	DAL2,IRC2,TEC
M8340107^3651%&	3,650		C,H,K,M,V	B, D, F	C, G	DAL2,IRC2,TEC
M8340107^3701%&	3,700		C,H,K,M,V	B, D	C, G	DAL2,IRC2,TEC
M8340107^3741%&	3,740	See PN Ordering Section	C,H,K,M,V	B, D, F	C, G	DAL2,IRC2,TEC
M8340107^3791%&	3,790		C,H,K,M,V	B, D	C, G	DAL2,IRC2,TEC
M8340107^3831%&	3,830		C,H,K,M,V	B, D, F	C, G	DAL2,IRC2,TEC
M8340107^3881%&	3,880		C,H,K,M,V	B, D	C, G	DAL2,IRC2,TEC
M8340107^3901%&	3,900		C,H,K,M,V	G, J	C, G	DAL2,IRC2,TEC
M8340107^3921%&	3,920	See PN Ordering Section	C,H,K,M,V	B, D, F	C, G	DAL2,IRC2,TEC
M8340107^3971%&	3,970		C,H,K,M,V	B, D	C, G	DAL2,IRC2,TEC
M8340107^4021%&	4,020		C,H,K,M,V	B, D, F	C, G	DAL2,IRC2,TEC
M8340107^4071%&	4,070		C,H,K,M,V	B, D	C, G	DAL2,IRC2,TEC
M8340107^4121%&	4,120		C,H,K,M,V	B, D, F	C, G	DAL2,IRC2,TEC
M8340107^4171%&	4,170	See PN Ordering Section	C,H,K,M,V	B, D	C, G	DAL2,IRC2,TEC
	Resistance	Power	Char.	Res.		
Part Number	Value (Ohms)	Rating	(^)	Tolerance	Schematic	Manufacturer
M8340107^4221%&	4,220		C,H,K,M,V	B, D, F	C, G	DAL2,IRC2,TEC
M8340107^4271%&	4,270		C,H,K,M,V	B, D	C, G	DAL2,IRC2,TEC
M8340107^4301%&	4,300		C,H,K,M,V	G, J	C, G	DAL2,IRC2,TEC
M8340107^4321%&	4,320		C,H,K,M,V	B, D, F	C, G	DAL2,IRC2,TEC
M8340107^4371%&	4,370	See PN Ordering Section	C,H,K,M,V	B, D	C, G	DAL2,IRC2,TEC
M8340107^4421%&	4,420		C,H,K,M,V	B, D, F	C, G	DAL2,IRC2,TEC
M8340107^4481%&	4,480		C,H,K,M,V	B, D	C, G	DAL2,IRC2,TEC
M8340107^4531%&	4,530		C,H,K,M,V	B, D, F	C, G	DAL2,IRC2,TEC
M8340107^4591%&	4,590		C,H,K,M,V	B, D	C, G	DAL2,IRC2,TEC
M8340107^4641%&	4,640	See PN Ordering Section	C,H,K,M,V	B, D, F	C, G	DAL2,IRC2,TEC
M8340107^4701%&	4,700		C,H,K,M,V	B, D, G, J	C, G	DAL2,IRC2,TEC
M8340107^4751%&	4,750		C,H,K,M,V	B, D, F	C, G	DAL2,IRC2,TEC
M8340107^4811%&	4,810		C,H,K,M,V	B, D	C, G	DAL2,IRC2,TEC
M8340107^4871%&	4,870		C,H,K,M,V	B, D, F	C, G	DAL2,IRC2,TEC
	Resistance	Power	Char.	Res.		
Part Number	Value (Ohms)	Rating	(^)	Tolerance	Schematic	Manufacturer
M8340107^4931%&	4,930	See PN Ordering Section	C,H,K,M,V	B, D	C, G	DAL2,IRC2,TEC
M8340107^4991%&	4,990		C,H,K,M,V	B, D, F	C, G	DAL2,IRC2,TEC

M8340107^5051%&	5,050		C,H,K,M,V	B, D	C, G	DAL2,IRC2,TEC
M8340107^5101%&	5,100		C,H,K,M,V	G, J	C, G	DAL2,IRC2,TEC
M8340107^5111%&	5,110		C,H,K,M,V	B, D, F	C, G	DAL2,IRC2,TEC
M8340107^5171%&	5,170	See PN Ordering Section	C,H,K,M,V	B, D	C, G	DAL2,IRC2,TEC
M8340107^5231%&	5,230		C,H,K,M,V	B, D, F	C, G	DAL2,IRC2,TEC
M8340107^5301%&	5,300		C,H,K,M,V	B, D	C, G	DAL2,IRC2,TEC
M8340107^5361%&	5,360		C,H,K,M,V	B, D, F	C, G	DAL2,IRC2,TEC
M8340107^5421%&	5,420		C,H,K,M,V	B, D	C, G	DAL2,IRC2,TEC
M8340107^5491%&	5,490	See PN Ordering Section	C,H,K,M,V	B, D, F	C, G	DAL2,IRC2,TEC
M8340107^5561%&	5,560		C,H,K,M,V	B, D	C, G	DAL2,IRC2,TEC
M8340107^5601%&	5,600		C,H,K,M,V	G, J	C, G	DAL2,IRC2,TEC
M8340107^5621%&	5,620		C,H,K,M,V	B, D, F	C, G	DAL2,IRC2,TEC
	Resistance	Power	Char.	Res.		
Part Number	Value (Ohms)	Rating	(^)	Tolerance	Schematic	Manufacturer
M8340107^5691%&	5,690		C,H,K,M,V	B, D	C, G	DAL2,IRC2,TEC
M8340107^5761%&	5,760	See PN Ordering Section	C,H,K,M,V	B, D, F	C, G	DAL2,IRC2,TEC
M8340107^5831%&	5,830		C,H,K,M,V	B, D	C, G	DAL2,IRC2,TEC
M8340107^5901%&	5,900		C,H,K,M,V	B, D, F	C, G	DAL2,IRC2,TEC
M8340107^5971%&	5,970		C,H,K,M,V	B, D	C, G	DAL2,IRC2,TEC
M8340107^6041%&	6,040		C,H,K,M,V	B, D, F	C, G	DAL2,IRC2,TEC
M8340107^6121%&	6,120	See PN Ordering Section	C,H,K,M,V	B, D	C, G	DAL2,IRC2,TEC
M8340107^6191%&	6,190		C,H,K,M,V	B, D, F	C, G	DAL2,IRC2,TEC
M8340107^6201%&	6,200		C,H,K,M,V	G, J	C, G	DAL2,IRC2,TEC
M8340107^6261%&	6,260		C,H,K,M,V	B, D	C, G	DAL2,IRC2,TEC
M8340107^6341%&	6,340		C,H,K,M,V	B, D, F	C, G	DAL2,IRC2,TEC
M8340107^6421%&	6,420	See PN Ordering Section	C,H,K,M,V	B, D	C, G	DAL2,IRC2,TEC
M8340107^6491%&	6,490		C,H,K,M,V	B, D, F	C, G	DAL2,IRC2,TEC
M8340107^6571%&	6,570		C,H,K,M,V	B, D	C, G	DAL2,IRC2,TEC
	Resistance	Power	Char.	Res.		
Part Number	Value (Ohms)	Rating	(^)	Tolerance	Schematic	Manufacturer
M8340107^6651%&	6,650		C,H,K,M,V	B, D, F	C, G	DAL2,IRC2,TEC
M8340107^6731%&	6,730		C,H,K,M,V	B, D	C, G	DAL2,IRC2,TEC
M8340107^6801%&	6,800	See PN Ordering Section	C,H,K,M,V	G, J	C, G	DAL2,IRC2,TEC
M8340107^6811%&	6,810		C,H,K,M,V	B, D, F	C, G	DAL2,IRC2,TEC
M8340107^6901%&	6,900		C,H,K,M,V	B, D	C, G	DAL2,IRC2,TEC
M8340107^6981%&	6,980		C,H,K,M,V	B, D, F	C, G	DAL2,IRC2,TEC
M8340107^7061%&	7,060		C,H,K,M,V	B, D	C, G	DAL2,IRC2,TEC
M8340107^7151%&	7,150	See PN Ordering Section	C,H,K,M,V	B, D, F	C, G	DAL2,IRC2,TEC
M8340107^7231%&	7,230		C,H,K,M,V	B, D	C, G	DAL2,IRC2,TEC
M8340107^7321%&	7,320		C,H,K,M,V	B, D, F	C, G	DAL2,IRC2,TEC
M8340107^7411%&	7,410		C,H,K,M,V	B, D	C, G	DAL2,IRC2,TEC
M8340107^7501%&	7,500		C,H,K,M,V	B, D, F, G, J	C, G	DAL2,IRC2,TEC
M8340107^7591%&	7,590	See PN Ordering Section	C,H,K,M,V	B, D	C, G	DAL2,IRC2,TEC
M8340107^7681%&	7,680		C,H,K,M,V	B, D, F	C, G	DAL2,IRC2,TEC
	Resistance	Power	Char.	Res.		
Part Number	Value (Ohms)	Rating	(^)	Tolerance	Schematic	Manufacturer
M8340107^7771%&	7,770		C,H,K,M,V	B, D	C, G	DAL2,IRC2,TEC

M8340107^7871%&	7,870		C,H,K,M,V	B, D, F	C, G	DAL2,IRC2,TEC
M8340107^7961%&	7,960		C,H,K,M,V	B, D	C, G	DAL2,IRC2,TEC
M8340107^8061%&	8,060	See PN Ordering Section	C,H,K,M,V	B, D, F	C, G	DAL2,IRC2,TEC
M8340107^8161%&	8,160		C,H,K,M,V	B, D	C, G	DAL2,IRC2,TEC
M8340107^8201%&	8,200		C,H,K,M,V	G, J	C, G	DAL2,IRC2,TEC
M8340107^8251%&	8,250		C,H,K,M,V	B, D, F	C, G	DAL2,IRC2,TEC
M8340107^8351%&	8,350		C,H,K,M,V	B, D	C, G	DAL2,IRC2,TEC
M8340107^8451%&	8,450	See PN Ordering Section	C,H,K,M,V	B, D, F	C, G	DAL2,IRC2,TEC
M8340107^8561%&	8,560		C,H,K,M,V	B, D	C, G	DAL2,IRC2,TEC
M8340107^8661%&	8,660		C,H,K,M,V	B, D, F	C, G	DAL2,IRC2,TEC
M8340107^8761%&	8,760		C,H,K,M,V	B, D	C, G	DAL2,IRC2,TEC
M8340107^8871%&	8,870		C,H,K,M,V	B, D, F	C, G	DAL2,IRC2,TEC
M8340107^8981%&	8,980	See PN Ordering Section	C,H,K,M,V	B, D	C, G	DAL2,IRC2,TEC
	Resistance	Power	Char.	Res.		
Part Number	Value (Ohms)	Rating	(^)	Tolerance	Schematic	Manufacturer
M8340107^9091%&	9,090		C,H,K,M,V	B, D, F	C, G	DAL2,IRC2,TEC
M8340107^9101%&	9,100		C,H,K,M,V	G, J	C, G	DAL2,IRC2,TEC
M8340107^9201%&	9,200		C,H,K,M,V	B, D	C, G	DAL2,IRC2,TEC
M8340107^9311%&	9,310		C,H,K,M,V	B, D, F	C, G	DAL2,IRC2,TEC
M8340107^9421%&	9,420	See PN Ordering Section	C,H,K,M,V	B, D	C, G	DAL2,IRC2,TEC
M8340107^9531%&	9,530		C,H,K,M,V	B, D, F	C, G	DAL2,IRC2,TEC
M8340107^9651%&	9,650		C,H,K,M,V	B, D	C, G	DAL2,IRC2,TEC
M8340107^9761%&	9,760		C,H,K,M,V	B, D, F	C, G	DAL2,IRC2,TEC
M8340107^9881%&	9,880		C,H,K,M,V	B, D	C, G	DAL2,IRC2,TEC

MIL-PRF-83401/7 (RZ070) Film Resistor Networks: 10,000 Ohms Through 98,800 Ohms

	Resistance	Power	Char.	Res.		
Part Number	Value (Ohms)	Rating	(^)	Tolerance	Schematic	Manufacturer
M8340107^1002%&	10,000	See PN Ordering Section	C,H,K,M,V	B, D, F, G, J	C, G	DAL2,IRC2,TEC
M8340107^1012%&	10,100		C,H,K,M,V	B, D	C, G	DAL2,IRC2,TEC
M8340107^1022%&	10,200		C,H,K,M,V	B, D, F	C, G	DAL2,IRC2,TEC
M8340107^1042%&	10,400		C,H,K,M,V	B, D	C, G	DAL2,IRC2,TEC
M8340107^1052%&	10,500		C,H,K,M,V	B, D, F	C, G	DAL2,IRC2,TEC
M8340107^1062%&	10,600	See PN Ordering Section	C,H,K,M,V	B, D	C, G	DAL2,IRC2,TEC
M8340107^1072%&	10,700		C,H,K,M,V	B, D, F	C, G	DAL2,IRC2,TEC
M8340107^1092%&	10,900		C,H,K,M,V	B, D	C, G	DAL2,IRC2,TEC
M8340107^1102%&	11,000		C,H,K,M,V	B, D, F, G, J	C, G	DAL2,IRC2,TEC
M8340107^1112%&	11,100		C,H,K,M,V	B, D	C, G	DAL2,IRC2,TEC
M8340107^1132%&	11,300	See PN Ordering Section	C,H,K,M,V	B, D, F	C, G	DAL2,IRC2,TEC
M8340107^1142%&	11,400		C,H,K,M,V	B, D	C, G	DAL2,IRC2,TEC
M8340107^1152%&	11,500		C,H,K,M,V	B, D, F	C, G	DAL2,IRC2,TEC
M8340107^1172%&	11,700		C,H,K,M,V	B, D	C, G	DAL2,IRC2,TEC
	Resistance	Power	Char.	Res.		
Part Number	Value (Ohms)	Rating	(^)	Tolerance	Schematic	Manufacturer

M8340107^1182%&	11,800		C,H,K,M,V	B, D, F	C, G	DAL2,IRC2,TEC
M8340107^1202%&	12,000	See PN Ordering Section	C,H,K,M,V	B, D, F, G, J	C, G	DAL2,IRC2,TEC
M8340107^1212%&	12,100		C,H,K,M,V	B, D, F	C, G	DAL2,IRC2,TEC
M8340107^1232%&	12,300		C,H,K,M,V	B, D	C, G	DAL2,IRC2,TEC
M8340107^1242%&	12,400		C,H,K,M,V	B, D, F	C, G	DAL2,IRC2,TEC
M8340107^1262%&	12,600		C,H,K,M,V	B, D	C, G	DAL2,IRC2,TEC
M8340107^1272%&	12,700	See PN Ordering Section	C,H,K,M,V	B, D, F	C, G	DAL2,IRC2,TEC
M8340107^1292%&	12,900		C,H,K,M,V	B, D	C, G	DAL2,IRC2,TEC
M8340107^1302%&	13,000		C,H,K,M,V	B, D, F, G, J	C, G	DAL2,IRC2,TEC
M8340107^1322%&	13,200		C,H,K,M,V	B, D	C, G	DAL2,IRC2,TEC
M8340107^1332%&	13,300		C,H,K,M,V	B, D, F	C, G	DAL2,IRC2,TEC
M8340107^1352%&	13,500	See PN Ordering Section	C,H,K,M,V	B, D	C, G	DAL2,IRC2,TEC
M8340107^1372%&	13,700		C,H,K,M,V	B, D, F	C, G	DAL2,IRC2,TEC
M8340107^1382%&	13,800		C,H,K,M,V	B, D	C, G	DAL2,IRC2,TEC
	Resistance	Power	Char.	Res.		
Part Number	Value (Ohms)	Rating	(^)	Tolerance	Schematic	Manufacturer
M8340107^1402%&	14,000		C,H,K,M,V	B, D, F	C, G	DAL2,IRC2,TEC
M8340107^1422%&	14,200		C,H,K,M,V	B, D	C, G	DAL2,IRC2,TEC
M8340107^1432%&	14,300	See PN Ordering Section	C,H,K,M,V	B, D, F	C, G	DAL2,IRC2,TEC
M8340107^1452%&	14,500		C,H,K,M,V	B, D	C, G	DAL2,IRC2,TEC
M8340107^1472%&	14,700		C,H,K,M,V	B, D, F	C, G	DAL2,IRC2,TEC
M8340107^1492%&	14,900		C,H,K,M,V	B, D	C, G	DAL2,IRC2,TEC
M8340107^1502%&	15,000		C,H,K,M,V	B, D, F, G, J	C, G	DAL2,IRC2,TEC
M8340107^1522%&	15,200	See PN Ordering Section	C,H,K,M,V	B, D	C, G	DAL2,IRC2,TEC
M8340107^1542%&	15,400		C,H,K,M,V	B, D, F	C, G	DAL2,IRC2,TEC
M8340107^1562%&	15,600		C,H,K,M,V	B, D	C, G	DAL2,IRC2,TEC
M8340107^1582%&	15,800		C,H,K,M,V	B, D, F	C, G	DAL2,IRC2,TEC
M8340107^1602%&	16,000		C,H,K,M,V	B, D, G, J	C, G	DAL2,IRC2,TEC
M8340107^1622%&	16,200	See PN Ordering Section	C,H,K,M,V	B, D, F	C, G	DAL2,IRC2,TEC
M8340107^1642%&	16,400		C,H,K,M,V	B, D	C, G	DAL2,IRC2,TEC
	Resistance	Power	Char.	Res.		
Part Number	Value (Ohms)	Rating	(^)	Tolerance	Schematic	Manufacturer
M8340107^1652%&	16,500		C,H,K,M,V	B, D, F	C, G	DAL2,IRC2,TEC
M8340107^1672%&	16,700		C,H,K,M,V	B, D	C, G	DAL2,IRC2,TEC
M8340107^1692%&	16,900		C,H,K,M,V	B, D, F	C, G	DAL2,IRC2,TEC
M8340107^1722%&	17,200	See PN Ordering Section	C,H,K,M,V	B, D	C, G	DAL2,IRC2,TEC
M8340107^1742%&	17,400		C,H,K,M,V	B, D, F	C, G	DAL2,IRC2,TEC
M8340107^1762%&	17,600		C,H,K,M,V	B, D	C, G	DAL2,IRC2,TEC
M8340107^1782%&	17,800		C,H,K,M,V	B, D, F	C, G	DAL2,IRC2,TEC
M8340107^1802%&	18,000		C,H,K,M,V	B, D, G, J	C, G	DAL2,IRC2,TEC
M8340107^1822%&	18,200	See PN Ordering Section	C,H,K,M,V	B, D, F	C, G	DAL2,IRC2,TEC
M8340107^1842%&	18,400		C,H,K,M,V	B, D	C, G	DAL2,IRC2,TEC
M8340107^1872%&	18,700		C,H,K,M,V	B, D, F	C, G	DAL2,IRC2,TEC
M8340107^1892%&	18,900		C,H,K,M,V	B, D	C, G	DAL2,IRC2,TEC
M8340107^1912%&	19,100		C,H,K,M,V	B, D, F	C, G	DAL2,IRC2,TEC
M8340107^1932%&	19,300	See PN Ordering Section	C,H,K,M,V	B, D	C, G	DAL2,IRC2,TEC
	Resistance	Power	Char.	Res.		

Part Number	Value (Ohms)	Rating	(^)	Tolerance	Schematic	Manufacturer
M8340107^1962%&	19,600		C,H,K,M,V	B, D, F	C, G	DAL2,IRC2,TEC
M8340107^1982%&	19,800		C,H,K,M,V	B, D	C, G	DAL2,IRC2,TEC
M8340107^2002%&	20,000		C,H,K,M,V	B, D, F, G, J	C, G	DAL2,IRC2,TEC
M8340107^2032%&	20,300		C,H,K,M,V	B, D	C, G	DAL2,IRC2,TEC
M8340107^2052%&	20,500	See PN Ordering Section	C,H,K,M,V	B, D, F	C, G	DAL2,IRC2,TEC
M8340107^2082%&	20,800		C,H,K,M,V	B, D	C, G	DAL2,IRC2,TEC
M8340107^2102%&	21,000		C,H,K,M,V	B, D, F	C, G	DAL2,IRC2,TEC
M8340107^2132%&	21,300		C,H,K,M,V	B, D	C, G	DAL2,IRC2,TEC
M8340107^2152%&	21,500		C,H,K,M,V	B, D, F	C, G	DAL2,IRC2,TEC
M8340107^2182%&	21,800	See PN Ordering Section	C,H,K,M,V	B, D	C, G	DAL2,IRC2,TEC
M8340107^2202%&	22,000		C,H,K,M,V	G, J	C, G	DAL2,IRC2,TEC
M8340107^2212%&	22,100		C,H,K,M,V	B, D, F	C, G	DAL2,IRC2,TEC
M8340107^2232%&	22,300		C,H,K,M,V	B, D	C, G	DAL2,IRC2,TEC
M8340107^2262%&	22,600		C,H,K,M,V	B, D, F	C, G	DAL2,IRC2,TEC
	Resistance	Power	Char.	Res.		
Part Number	Value (Ohms)	Rating	(^)	Tolerance	Schematic	Manufacturer
M8340107^2292%&	22,900	See PN Ordering Section	C,H,K,M,V	B, D	C, G	DAL2,IRC2,TEC
M8340107^2322%&	23,200		C,H,K,M,V	B, D, F	C, G	DAL2,IRC2,TEC
M8340107^2342%&	23,400		C,H,K,M,V	B, D	C, G	DAL2,IRC2,TEC
M8340107^2372%&	23,700		C,H,K,M,V	B, D, F	C, G	DAL2,IRC2,TEC
M8340107^2402%&	24,000		C,H,K,M,V	B, D, F, G, J	C, G	DAL2,IRC2,TEC
M8340107^2432%&	24,300	See PN Ordering Section	C,H,K,M,V	B, D, F	C, G	DAL2,IRC2,TEC
M8340107^2462%&	24,600		C,H,K,M,V	B, D	C, G	DAL2,IRC2,TEC
M8340107^2492%&	24,900		C,H,K,M,V	B, D, F	C, G	DAL2,IRC2,TEC
M8340107^2522%&	25,200		C,H,K,M,V	B, D	C, G	DAL2,IRC2,TEC
M8340107^2552%&	25,500		C,H,K,M,V	B, D, F	C, G	DAL2,IRC2,TEC
M8340107^2582%&	25,800	See PN Ordering Section	C,H,K,M,V	B, D	C, G	DAL2,IRC2,TEC
M8340107^2612%&	26,100		C,H,K,M,V	B, D, F	C, G	DAL2,IRC2,TEC
M8340107^2642%&	26,400		C,H,K,M,V	B, D	C, G	DAL2,IRC2,TEC
M8340107^2672%&	26,700		C,H,K,M,V	B, D, F	C, G	DAL2,IRC2,TEC
	Resistance	Power	Char.	Res.		
Part Number	Value (Ohms)	Rating	(^)	Tolerance	Schematic	Manufacturer
M8340107^2702%&	27,000		C,H,K,M,V	G, J	C, G	DAL2,IRC2,TEC
M8340107^2712%&	27,100	See PN Ordering Section	C,H,K,M,V	B, D	C, G	DAL2,IRC2,TEC
M8340107^2742%&	27,400		C,H,K,M,V	B, D, F	C, G	DAL2,IRC2,TEC
M8340107^2772%&	27,700		C,H,K,M,V	B, D	C, G	DAL2,IRC2,TEC
M8340107^2802%&	28,000		C,H,K,M,V	B, D, F	C, G	DAL2,IRC2,TEC
M8340107^2842%&	28,400		C,H,K,M,V	B, D	C, G	DAL2,IRC2,TEC
M8340107^2872%&	28,700	See PN Ordering Section	C,H,K,M,V	B, D, F	C, G	DAL2,IRC2,TEC
M8340107^2912%&	29,100		C,H,K,M,V	B, D	C, G	DAL2,IRC2,TEC
M8340107^2942%&	29,400		C,H,K,M,V	B, D, F	C, G	DAL2,IRC2,TEC
M8340107^2982%&	29,800		C,H,K,M,V	B, D	C, G	DAL2,IRC2,TEC
M8340107^3002%&	30,000		C,H,K,M,V	G, J	C, G	DAL2,IRC2,TEC
M8340107^3012%&	30,100	See PN Ordering Section	C,H,K,M,V	B, D, F	C, G	DAL2,IRC2,TEC
M8340107^3052%&	30,500		C,H,K,M,V	B, D	C, G	DAL2,IRC2,TEC
M8340107^3092%&	30,900		C,H,K,M,V	B, D, F	C, G	DAL2,IRC2,TEC

	Resistance	Power	Char.	Res.		
Part Number	Value (Ohms)	Rating	(^)	Tolerance	Schematic	Manufacturer
M8340107^3122%&	31,200		C,H,K,M,V	B, D	C, G	DAL2,IRC2,TEC
M8340107^3162%&	31,600		C,H,K,M,V	B, D, F	C, G	DAL2,IRC2,TEC
M8340107^3202%&	32,000	See PN Ordering Section	C,H,K,M,V	B, D	C, G	DAL2,IRC2,TEC
M8340107^3242%&	32,400		C,H,K,M,V	B, D, F	C, G	DAL2,IRC2,TEC
M8340107^3282%&	32,800		C,H,K,M,V	B, D	C, G	DAL2,IRC2,TEC
M8340107^3302%&	33,000		C,H,K,M,V	G, J	C, G	DAL2,IRC2,TEC
M8340107^3322%&	33,200		C,H,K,M,V	B, D, F	C, G	DAL2,IRC2,TEC
M8340107^3362%&	33,600	See PN Ordering Section	C,H,K,M,V	B, D	C, G	DAL2,IRC2,TEC
M8340107^3402%&	34,000		C,H,K,M,V	B, D, F	C, G	DAL2,IRC2,TEC
M8340107^3442%&	34,400		C,H,K,M,V	B, D	C, G	DAL2,IRC2,TEC
M8340107^3482%&	34,800		C,H,K,M,V	B, D, F	C, G	DAL2,IRC2,TEC
M8340107^3522%&	35,200		C,H,K,M,V	B, D	C, G	DAL2,IRC2,TEC
M8340107^3572%&	35,700	See PN Ordering Section	C,H,K,M,V	B, D, F	C, G	DAL2,IRC2,TEC
M8340107^3602%&	36,000		C,H,K,M,V	G, J	C, G	DAL2,IRC2,TEC
	Resistance	Power	Char.	Res.		
Part Number	Value (Ohms)	Rating	(^)	Tolerance	Schematic	Manufacturer
M8340107^3612%&	36,100		C,H,K,M,V	B, D	C, G	DAL2,IRC2,TEC
M8340107^3652%&	36,500		C,H,K,M,V	B, D, F	C, G	DAL2,IRC2,TEC
M8340107^3702%&	37,000		C,H,K,M,V	B, D	C, G	DAL2,IRC2,TEC
M8340107^3742%&	37,400	See PN Ordering Section	C,H,K,M,V	B, D, F	C, G	DAL2,IRC2,TEC
M8340107^3792%&	37,900		C,H,K,M,V	B, D	C, G	DAL2,IRC2,TEC
M8340107^3832%&	38,300		C,H,K,M,V	B, D, F	C, G	DAL2,IRC2,TEC
M8340107^3882%&	38,800		C,H,K,M,V	B, D	C, G	DAL2,IRC2,TEC
M8340107^3902%&	39,000		C,H,K,M,V	G, J	C, G	DAL2,IRC2,TEC
M8340107^3922%&	39,200	See PN Ordering Section	C,H,K,M,V	B, D, F	C, G	DAL2,IRC2,TEC
M8340107^3972%&	39,700		C,H,K,M,V	B, D	C, G	DAL2,IRC2,TEC
M8340107^4022%&	40,200		C,H,K,M,V	B, D, F	C, G	DAL2,IRC2,TEC
M8340107^4072%&	40,700		C,H,K,M,V	B, D	C, G	DAL2,IRC2,TEC
M8340107^4122%&	41,200		C,H,K,M,V	B, D, F	C, G	DAL2,IRC2,TEC
M8340107^4172%&	41,700	See PN Ordering Section	C,H,K,M,V	B, D	C, G	DAL2,IRC2,TEC
	Resistance	Power	Char.	Res.		
Part Number	Value (Ohms)	Rating	(^)	Tolerance	Schematic	Manufacturer
M8340107^4222%&	42,200		C,H,K,M,V	B, D, F	C, G	DAL2,IRC2,TEC
M8340107^4272%&	42,700		C,H,K,M,V	B, D	C, G	DAL2,IRC2,TEC
M8340107^4302%&	43,000		C,H,K,M,V	G, J	C, G	DAL2,IRC2,TEC
M8340107^4322%&	43,200		C,H,K,M,V	B, D, F	C, G	DAL2,IRC2,TEC
M8340107^4372%&	43,700	See PN Ordering Section	C,H,K,M,V	B, D	C, G	DAL2,IRC2,TEC
M8340107^4422%&	44,200		C,H,K,M,V	B, D, F	C, G	DAL2,IRC2,TEC
M8340107^4482%&	44,800		C,H,K,M,V	B, D	C, G	DAL2,IRC2,TEC
M8340107^4532%&	45,300		C,H,K,M,V	B, D, F	C, G	DAL2,IRC2,TEC
M8340107^4592%&	45,900		C,H,K,M,V	B, D	C, G	DAL2,IRC2,TEC
M8340107^4642%&	46,400	See PN Ordering Section	C,H,K,M,V	B, D, F	C, G	DAL2,IRC2,TEC
M8340107^4702%&	47,000		C,H,K,M,V	B, D, G, J	C, G	DAL2,IRC2,TEC
M8340107^4752%&	47,500		C,H,K,M,V	B, D, F	C, G	DAL2,IRC2,TEC
M8340107^4812%&	48,100		C,H,K,M,V	B, D	C, G	DAL2,IRC2,TEC

M8340107^4872%&	48,700		C,H,K,M,V	B, D, F	C, G	DAL2,IRC2,TEC
	Resistance	Power	Char.	Res.		
Part Number	Value (Ohms)	Rating	(^)	Tolerance	Schematic	Manufacturer
M8340107^4932%&	49,300	See PN Ordering Section	C,H,K,M,V	B, D	C, G	DAL2,IRC2,TEC
M8340107^4992%&	49,900		C,H,K,M,V	B, D, F	C, G	DAL2,IRC2,TEC
M8340107^5052%&	50,500		C,H,K,M,V	B, D	C, G	DAL2,IRC2,TEC
M8340107^5102%&	51,000		C,H,K,M,V	G, J	C, G	DAL2,IRC2,TEC
M8340107^5112%&	51,100		C,H,K,M,V	B, D, F	C, G	DAL2,IRC2,TEC
M8340107^5172%&	51,700	See PN Ordering Section	C,H,K,M,V	B, D	C, G	DAL2,IRC2,TEC
M8340107^5232%&	52,300		C,H,K,M,V	B, D, F	C, G	DAL2,IRC2,TEC
M8340107^5302%&	53,000		C,H,K,M,V	B, D	C, G	DAL2,IRC2,TEC
M8340107^5362%&	53,600		C,H,K,M,V	B, D, F	C, G	DAL2,IRC2,TEC
M8340107^5422%&	54,200		C,H,K,M,V	B, D	C, G	DAL2,IRC2,TEC
M8340107^5492%&	54,900	See PN Ordering Section	C,H,K,M,V	B, D, F	C, G	DAL2,IRC2,TEC
M8340107^5562%&	55,600		C,H,K,M,V	B, D	C, G	DAL2,IRC2,TEC
M8340107^5602%&	56,000		C,H,K,M,V	G, J	C, G	DAL2,IRC2,TEC
M8340107^5622%&	56,200		C,H,K,M,V	B, D, F	C, G	DAL2,IRC2,TEC
	Resistance	Power	Char.	Res.		
Part Number	Value (Ohms)	Rating	(^)	Tolerance	Schematic	Manufacturer
M8340107^5692%&	56,900		C,H,K,M,V	B, D	C, G	DAL2,IRC2,TEC
M8340107^5762%&	57,600	See PN Ordering Section	C,H,K,M,V	B, D, F	C, G	DAL2,IRC2,TEC
M8340107^5832%&	58,300		C,H,K,M,V	B, D	C, G	DAL2,IRC2,TEC
M8340107^5902%&	59,000		C,H,K,M,V	B, D, F	C, G	DAL2,IRC2,TEC
M8340107^5972%&	59,700		C,H,K,M,V	B, D	C, G	DAL2,IRC2,TEC
M8340107^6042%&	60,400		C,H,K,M,V	B, D, F	C, G	DAL2,IRC2,TEC
M8340107^6122%&	61,200	See PN Ordering Section	C,H,K,M,V	B, D	C, G	DAL2,IRC2,TEC
M8340107^6192%&	61,900		C,H,K,M,V	B, D, F	C, G	DAL2,IRC2,TEC
M8340107^6202%&	62,000		C,H,K,M,V	G, J	C, G	DAL2,IRC2,TEC
M8340107^6262%&	62,600		C,H,K,M,V	B, D	C, G	DAL2,IRC2,TEC
M8340107^6342%&	63,400		C,H,K,M,V	B, D, F	C, G	DAL2,IRC2,TEC
M8340107^6422%&	64,200	See PN Ordering Section	C,H,K,M,V	B, D	C, G	DAL2,IRC2,TEC
M8340107^6492%&	64,900		C,H,K,M,V	B, D, F	C, G	DAL2,IRC2,TEC
M8340107^6572%&	65,700		C,H,K,M,V	B, D	C, G	DAL2,IRC2,TEC
	Resistance	Power	Char.	Res.		
Part Number	Value (Ohms)	Rating	(^)	Tolerance	Schematic	Manufacturer
M8340107^6652%&	66,500		C,H,K,M,V	B, D, F	C, G	DAL2,IRC2,TEC
M8340107^6732%&	67,300		C,H,K,M,V	B, D	C, G	DAL2,IRC2,TEC
M8340107^6802%&	68,000	See PN Ordering Section	C,H,K,M,V	G, J	C, G	DAL2,IRC2,TEC
M8340107^6812%&	68,100		C,H,K,M,V	B, D, F	C, G	DAL2,IRC2,TEC
M8340107^6902%&	69,000		C,H,K,M,V	B, D	C, G	DAL2,IRC2,TEC
M8340107^6982%&	69,800		C,H,K,M,V	B, D, F	C, G	DAL2,IRC2,TEC
M8340107^7062%&	70,600		C,H,K,M,V	B, D	C, G	DAL2,IRC2,TEC
M8340107^7152%&	71,500	See PN Ordering Section	C,H,K,M,V	B, D, F	C, G	DAL2,IRC2,TEC
M8340107^7232%&	72,300		C,H,K,M,V	B, D	C, G	DAL2,IRC2,TEC
M8340107^7322%&	73,200		C,H,K,M,V	B, D, F	C, G	DAL2,IRC2,TEC
M8340107^7412%&	74,100		C,H,K,M,V	B, D	C, G	DAL2,IRC2,TEC
M8340107^7502%&	75,000		C,H,K,M,V	B, D, F, G, J	C, G	DAL2,IRC2,TEC

M8340107^7592%&	75,900	See PN Ordering Section	C,H,K,M,V	B, D	C, G	DAL2,IRC2,TEC
M8340107^7682%&	76,800		C,H,K,M,V	B, D, F	C, G	DAL2,IRC2,TEC
	Resistance	Power	Char.	Res.		
Part Number	Value (Ohms)	Rating	(^)	Tolerance	Schematic	Manufacturer
M8340107^7772%&	77,700		C,H,K,M,V	B, D	C, G	DAL2,IRC2,TEC
M8340107^7872%&	78,700		C,H,K,M,V	B, D, F	C, G	DAL2,IRC2,TEC
M8340107^7962%&	79,600		C,H,K,M,V	B, D	C, G	DAL2,IRC2,TEC
M8340107^8062%&	80,600	See PN Ordering Section	C,H,K,M,V	B, D, F	C, G	DAL2,IRC2,TEC
M8340107^8162%&	81,600		C,H,K,M,V	B, D	C, G	DAL2,IRC2,TEC
M8340107^8202%&	82,000		C,H,K,M,V	G, J	C, G	DAL2,IRC2,TEC
M8340107^8252%&	82,500		C,H,K,M,V	B, D, F	C, G	DAL2,IRC2,TEC
M8340107^8352%&	83,500		C,H,K,M,V	B, D	C, G	DAL2,IRC2,TEC
M8340107^8452%&	84,500	See PN Ordering Section	C,H,K,M,V	B, D, F	C, G	DAL2,IRC2,TEC
M8340107^8562%&	85,600		C,H,K,M,V	B, D	C, G	DAL2,IRC2,TEC
M8340107^8662%&	86,600		C,H,K,M,V	B, D, F	C, G	DAL2,IRC2,TEC
M8340107^8762%&	87,600		C,H,K,M,V	B, D	C, G	DAL2,IRC2,TEC
M8340107^8872%&	88,700		C,H,K,M,V	B, D, F	C, G	DAL2,IRC2,TEC
M8340107^8982%&	89,800	See PN Ordering Section	C,H,K,M,V	B, D	C, G	DAL2,IRC2,TEC
	Resistance	Power	Char.	Res.		
Part Number	Value (Ohms)	Rating	(^)	Tolerance	Schematic	Manufacturer
M8340107^9092%&	90,900		C,H,K,M,V	B, D, F	C, G	DAL2,IRC2,TEC
M8340107^9102%&	91,000		C,H,K,M,V	G, J	C, G	DAL2,IRC2,TEC
M8340107^9202%&	92,000		C,H,K,M,V	B, D	C, G	DAL2,IRC2,TEC
M8340107^9312%&	93,100		C,H,K,M,V	B, D, F	C, G	DAL2,IRC2,TEC
M8340107^9422%&	94,200	See PN Ordering Section	C,H,K,M,V	B, D	C, G	DAL2,IRC2,TEC
M8340107^9532%&	95,300		C,H,K,M,V	B, D, F	C, G	DAL2,IRC2,TEC
M8340107^9652%&	96,500		C,H,K,M,V	B, D	C, G	DAL2,IRC2,TEC
M8340107^9762%&	97,600		C,H,K,M,V	B, D, F	C, G	DAL2,IRC2,TEC
M8340107^9882%&	98,800		C,H,K,M,V	B, D	C, G	DAL2,IRC2,TEC

MIL-PRF-83401/7 (RZ070) Film Resistor Networks: 100,000 Ohms Through 1,000,000 Ohms

	Resistance	Power	Char.	Res.		
Part Number	Value (Ohms)	Rating	(^)	Tolerance	Schematic	Manufacturer
M8340107^1003%&	100,000	See PN Ordering Section	C,H,K,M,V	B, D, F, G, J	C, G	DAL2,IRC2,TEC
M8340107^1023%&	102,000		C,H,K,M,V	F	C, G	DAL2
M8340107^1053%&	105,000		C,H,K,M,V	F	C, G	DAL2
M8340107^1073%&	107,000		C,H,K,M,V	F	C, G	DAL2
M8340107^1103%&	110,000		C,H,K,M,V	F, G, J	C, G	DAL2
M8340107^1133%&	113,000	See PN Ordering Section	C,H,K,M,V	F	C, G	DAL2
M8340107^1153%&	115,000		C,H,K,M,V	F	C, G	DAL2
M8340107^1183%&	118,000		C,H,K,M,V	F	C, G	DAL2
M8340107^1203%&	120,000	See PN Ordering Section	C,H,K,M,V	F, G, J	C, G	DAL2
M8340107^1213%&	121,000		C,H,K,M,V	F	C, G	DAL2
M8340107^1243%&	124,000		C,H,K,M,V	F	C, G	DAL2

M8340107^1273%&	127,000	See PN Ordering Section	C,H,K,M,V	F	C, G	DAL2
M8340107^1303%&	130,000		C,H,K,M,V	F, G, J	C, G	DAL2
M8340107^1333%&	133,000		C,H,K,M,V	F	C, G	DAL2
	Resistance	Power	Char.	Res.		
Part Number	Value (Ohms)	Rating	(^)	Tolerance	Schematic	Manufacturer
M8340107^1373%&	137,000		C,H,K,M,V	F	C, G	DAL2
M8340107^1403%&	140,000		C,H,K,M,V	F	C, G	DAL2
M8340107^1433%&	143,000	See PN Ordering Section	C,H,K,M,V	F	C, G	DAL2
M8340107^1473%&	147,000		C,H,K,M,V	F	C, G	DAL2
M8340107^1503%&	150,000		C,H,K,M,V	F, G, J	C, G	DAL2
M8340107^1543%&	154,000		C,H,K,M,V	F	C, G	DAL2
M8340107^1583%&	158,000		C,H,K,M,V	F	C, G	DAL2
M8340107^1603%&	160,000		C,H,K,M,V	G, J	C, G	DAL2
M8340107^1623%&	162,000	See PN Ordering Section	C,H,K,M,V	F	C, G	DAL2
M8340107^1653%&	165,000		C,H,K,M,V	F	C, G	DAL2
M8340107^1693%&	169,000		C,H,K,M,V	F	C, G	DAL2
M8340107^1743%&	174,000		C,H,K,M,V	F	C, G	DAL2
M8340107^1783%&	178,000		C,H,K,M,V	F	C, G	DAL2
M8340107^1803%&	180,000		C,H,K,M,V	G, J	C, G	DAL2
	Resistance	Power	Char.	Res.		
Part Number	Value (Ohms)	Rating	(^)	Tolerance	Schematic	Manufacturer
M8340107^1823%&	182,000	See PN Ordering Section	C,H,K,M,V	F	C, G	DAL2
M8340107^1873%&	187,000		C,H,K,M,V	F	C, G	DAL2
M8340107^1913%&	191,000		C,H,K,M,V	F	C, G	DAL2
M8340107^1963%&	196,000		C,H,K,M,V	F	C, G	DAL2
M8340107^2003%&	200,000		C,H,K,M,V	F, G, J	C, G	DAL2
M8340107^2053%&	205,000	See PN Ordering Section	C,H,K,M,V	F	C, G	DAL2
M8340107^2103%&	210,000		C,H,K,M,V	F	C, G	DAL2
M8340107^2153%&	215,000		C,H,K,M,V	F	C, G	DAL2
M8340107^2183%&	218,000	See PN Ordering Section	C,H,K,M,V		C, G	DAL2
M8340107^2203%&	220,000		C,H,K,M,V	G, J	C, G	DAL2
M8340107^2213%&	221,000		C,H,K,M,V	F	C, G	DAL2
M8340107^2263%&	226,000		C,H,K,M,V	F	C, G	DAL2
M8340107^2323%&	232,000		C,H,K,M,V	F	C, G	DAL2
M8340107^2373%&	237,000		C,H,K,M,V	F	C, G	DAL2
	Resistance	Power	Char.	Res.		
Part Number	Value (Ohms)	Rating	(^)	Tolerance	Schematic	Manufacturer
M8340107^2403%&	240,000		C,H,K,M,V	F, G, J	C, G	DAL2
M8340107^2433%&	243,000	See PN Ordering Section	C,H,K,M,V	F	C, G	DAL2
M8340107^2493%&	249,000		C,H,K,M,V	F	C, G	DAL2
M8340107^2553%&	255,000		C,H,K,M,V	F	C, G	DAL2
M8340107^2613%&	261,000		C,H,K,M,V	F	C, G	DAL2
M8340107^2673%&	267,000		C,H,K,M,V	F	C, G	DAL2
M8340107^2703%&	270,000		C,H,K,M,V	G, J	C, G	DAL2
M8340107^2743%&	274,000		C,H,K,M,V	F	C, G	DAL2
M8340107^2803%&	280,000		C,H,K,M,V	F	C, G	DAL2
M8340107^2873%&	287,000	See PN Ordering Section	C,H,K,M,V	F	C, G	DAL2

M8340107^2943%&	294,000		C,H,K,M,V	F	C, G	DAL2
M8340107^3003%&	300,000		C,H,K,M,V	G, J	C, G	DAL2
M8340107^3013%&	301,000	See PN Ordering Section	C,H,K,M,V	F	C, G	DAL2
M8340107^3093%&	309,000		C,H,K,M,V	F	C, G	DAL2
	Resistance	Power	Char.	Res.		
Part Number	Value (Ohms)	Rating	(^)	Tolerance	Schematic	Manufacturer
M8340107^3163%&	316,000		C,H,K,M,V	F	C, G	DAL2
M8340107^3243%&	324,000		C,H,K,M,V	F	C, G	DAL2
M8340107^3303%&	330,000		C,H,K,M,V	G, J	C, G	DAL2
M8340107^3323%&	332,000		C,H,K,M,V	F	C, G	DAL2
M8340107^3403%&	340,000		C,H,K,M,V	F	C, G	DAL2
M8340107^3483%&	348,000		C,H,K,M,V	F	C, G	DAL2
M8340107^3573%&	357,000	See PN Ordering Section	C,H,K,M,V	F	C, G	DAL2
M8340107^3603%&	360,000		C,H,K,M,V	G, J	C, G	DAL2
M8340107^3653%&	365,000		C,H,K,M,V	F	C, G	DAL2
M8340107^3743%&	374,000	See PN Ordering Section	C,H,K,M,V	F	C, G	DAL2
M8340107^3833%&	383,000		C,H,K,M,V	F	C, G	DAL2
M8340107^3903%&	390,000		C,H,K,M,V	G, J	C, G	DAL2
M8340107^3923%&	392,000	See PN Ordering Section	C,H,K,M,V	F	C, G	DAL2
M8340107^4023%&	402,000		C,H,K,M,V	F	C, G	DAL2
	Resistance	Power	Char.	Res.		
Part Number	Value (Ohms)	Rating	(^)	Tolerance	Schematic	Manufacturer
M8340107^4123%&	412,000		C,H,K,M,V	F	C, G	DAL2
M8340107^4223%&	422,000		C,H,K,M,V	F	C, G	DAL2
M8340107^4303%&	430,000		C,H,K,M,V	G, J	C, G	DAL2
M8340107^4323%&	432,000		C,H,K,M,V	F	C, G	DAL2
M8340107^4423%&	442,000		C,H,K,M,V	F	C, G	DAL2
M8340107^4533%&	453,000		C,H,K,M,V	F	C, G	DAL2
M8340107^4643%&	464,000	See PN Ordering Section	C,H,K,M,V	F	C, G	DAL2
M8340107^4703%&	470,000		C,H,K,M,V	G, J	C, G	DAL2
M8340107^4753%&	475,000		C,H,K,M,V	F	C, G	DAL2
M8340107^4873%&	487,000		C,H,K,M,V	F	C, G	DAL2
M8340107^4993%&	499,000		C,H,K,M,V	F	C, G	DAL2
M8340107^5103%&	510,000		C,H,K,M,V	G, J	C, G	DAL2
M8340107^5113%&	511,000		C,H,K,M,V	F	C, G	DAL2
M8340107^5233%&	523,000		C,H,K,M,V	F	C, G	DAL2
	Resistance	Power	Char.	Res.		
Part Number	Value (Ohms)	Rating	(^)	Tolerance	Schematic	Manufacturer
M8340107^5363%&	536,000		C,H,K,M,V	F	C, G	DAL2
M8340107^5493%&	549,000	See PN Ordering Section	C,H,K,M,V	F	C, G	DAL2
M8340107^5603%&	560,000		C,H,K,M,V	G, J	C, G	DAL2
M8340107^5623%&	562,000		C,H,K,M,V	F	C, G	DAL2
M8340107^5763%&	576,000	See PN Ordering Section	C,H,K,M,V	F	C, G	DAL2
M8340107^5903%&	590,000		C,H,K,M,V	F	C, G	DAL2
M8340107^6043%&	604,000		C,H,K,M,V	F	C, G	DAL2
M8340107^6193%&	619,000		C,H,K,M,V	F	C, G	DAL2
M8340107^6203%&	620,000		C,H,K,M,V	G, J	C, G	DAL2

M8340107^6343%&	634,000		C,H,K,M,V	F	C, G	DAL2
M8340107^6493%&	649,000		C,H,K,M,V	F	C, G	DAL2
M8340107^6653%&	665,000		C,H,K,M,V	F	C, G	DAL2
M8340107^6803%&	680,000	See PN Ordering Section	C,H,K,M,V	G, J	C, G	DAL2
M8340107^6813%&	681,000		C,H,K,M,V	F	C, G	DAL2
	Resistance	Power	Char.	Res.		
Part Number	Value (Ohms)	Rating	(^)	Tolerance	Schematic	Manufacturer
M8340107^6983%&	698,000		C,H,K,M,V	F	C, G	DAL2
M8340107^7153%&	715,000	See PN Ordering Section	C,H,K,M,V	F	C, G	DAL2
M8340107^7323%&	732,000		C,H,K,M,V	F	C, G	DAL2
M8340107^7503%&	750,000		C,H,K,M,V	F, G, J	C, G	DAL2
M8340107^7683%&	768,000		C,H,K,M,V	F	C, G	DAL2
M8340107^7873%&	787,000		C,H,K,M,V	F	C, G	DAL2
M8340107^8063%&	806,000	See PN Ordering Section	C,H,K,M,V	F	C, G	DAL2
M8340107^8203%&	820,000		C,H,K,M,V	G, J	C, G	DAL2
M8340107^8253%&	825,000		C,H,K,M,V	F	C, G	DAL2
M8340107^8453%&	845,000	See PN Ordering Section	C,H,K,M,V	F	C, G	DAL2
M8340107^8663%&	866,000		C,H,K,M,V	F	C, G	DAL2
M8340107^8873%&	887,000		C,H,K,M,V	F	C, G	DAL2
M8340107^9093%&	909,000		C,H,K,M,V	F	C, G	DAL2
M8340107^9103%&	910,000		C,H,K,M,V	G, J	C, G	DAL2
	Resistance	Power	Char.	Res.		
Part Number	Value (Ohms)	Rating	(^)	Tolerance	Schematic	Manufacturer
M8340107^9313%&	931,000		C,H,K,M,V	F	C, G	DAL2
M8340107^9533%&	953,000		C,H,K,M,V	F	C, G	DAL2
M8340107^9763%&	976,000		C,H,K,M,V	F	C, G	DAL2
M8340107^1004%&	1,000,000	See PN Ordering Section	C,H,K,M,V	F, G, J	C, G	DAL2

MIL-PRF-83401/8 (RZ080) Film Resistor Networks

10.0 Ohms Through 1,000,000 Ohms

	Resistance	Power	Char.	Res.		
Part Number	Value (Ohms)	Rating	(^)	Tolerance	Schematic	Manufacturer
M8340108^10R0%&	10.0	Link at Top	C,H,K,M,V	F, G, J	C, G	DAL2
M8340108^10R2%&	10.2		C,H,K,M,V	F	C, G	DAL2
M8340108^10R5%&	10.5		C,H,K,M,V	F	C, G	DAL2
M8340108^10R7%&	10.7		C,H,K,M,V	F	C, G	DAL2
M8340108^11R0%&	11.0		C,H,K,M,V	F, G, J	C, G	DAL2
M8340108^11R3%&	11.3	Link at Top	C,H,K,M,V	F	C, G	DAL2
M8340108^11R5%&	11.5		C,H,K,M,V	F	C, G	DAL2
M8340108^11R8%&	11.8		C,H,K,M,V	F	C, G	DAL2
M8340108^12R0%&	12.0		C,H,K,M,V	F, G, J	C, G	DAL2
M8340108^12R1%&	12.1		C,H,K,M,V	F	C, G	DAL2
M8340108^12R4%&	12.4	Link at Top	C,H,K,M,V	F	C, G	DAL2
M8340108^12R7%&	12.7		C,H,K,M,V	F	C, G	DAL2

M8340108^13R0%&	13.0		C,H,K,M,V	F, G, J	C, G	DAL2
M8340108^13R3%&	13.3		C,H,K,M,V	F	C, G	DAL2
M8340108^13R7%&	13.7		C,H,K,M,V	F	C, G	DAL2
M8340108^14R0%&	14.0	Link at Top	C,H,K,M,V	F	C, G	DAL2
M8340108^14R3%&	14.3		C,H,K,M,V	F	C, G	DAL2
M8340108^14R7%&	14.7		C,H,K,M,V	F	C, G	DAL2
M8340108^15R0%&	15.0		C,H,K,M,V	F, G, J	C, G	DAL2
M8340108^15R4%&	15.4		C,H,K,M,V	F	C, G	DAL2
M8340108^15R8%&	15.8	Link at Top	C,H,K,M,V	F	C, G	DAL2
M8340108^16R0%&	16.0		C,H,K,M,V	G, J	C, G	DAL2
M8340108^16R2%&	16.2		C,H,K,M,V	F	C, G	DAL2
M8340108^16R5%&	16.5		C,H,K,M,V	F	C, G	DAL2
M8340108^16R9%&	16.9		C,H,K,M,V	F	C, G	DAL2
M8340108^17R4%&	17.4	Link at Top	C,H,K,M,V	F	C, G	DAL2
M8340108^17R8%&	17.8		C,H,K,M,V	F	C, G	DAL2
M8340108^18R0%&	18.0		C,H,K,M,V	G, J	C, G	DAL2
M8340108^18R2%&	18.2		C,H,K,M,V	F	C, G	DAL2
M8340108^18R7%&	18.7		C,H,K,M,V	F	C, G	DAL2
M8340108^19R1%&	19.1	Link at Top	C,H,K,M,V	F	C, G	DAL2
M8340108^19R6%&	19.6		C,H,K,M,V	F	C, G	DAL2
M8340108^20R0%&	20.0		C,H,K,M,V	F, G, J	C, G	DAL2
M8340108^20R5%&	20.5		C,H,K,M,V	F	C, G	DAL2
M8340108^21R0%&	21.0		C,H,K,M,V	F	C, G	DAL2
M8340108^21R5%&	21.5	Link at Top	C,H,K,M,V	F	C, G	DAL2
M8340108^22R0%&	22.0		C,H,K,M,V	G, J	C, G	DAL2
M8340108^22R1%&	22.1		C,H,K,M,V	F	C, G	DAL2
M8340108^22R6%&	22.6		C,H,K,M,V	F	C, G	DAL2
M8340108^23R2%&	23.2		C,H,K,M,V	F	C, G	DAL2
M8340108^23R7%&	23.7	Link at Top	C,H,K,M,V	F	C, G	DAL2
M8340108^24R0%&	24.0		C,H,K,M,V	F, G, J	C, G	DAL2
M8340108^24R3%&	24.3		C,H,K,M,V	F	C, G	DAL2
M8340108^24R9%&	24.9		C,H,K,M,V	F	C, G	DAL2
M8340108^25R5%&	25.5		C,H,K,M,V	F	C, G	DAL2
M8340108^26R1%&	26.1	Link at Top	C,H,K,M,V	F	C, G	DAL2
M8340108^26R7%&	26.7		C,H,K,M,V	F	C, G	DAL2
M8340108^27R0%&	27.0		C,H,K,M,V	G, J	C, G	DAL2,TEC
M8340108^27R4%&	27.4		C,H,K,M,V	F	C, G	DAL2,TEC
M8340108^28R0%&	28.0		C,H,K,M,V	F	C, G	DAL2,TEC
M8340108^28R7%&	28.7	Link at Top	C,H,K,M,V	F	C, G	DAL2,TEC
M8340108^29R4%&	29.4		C,H,K,M,V	F	C, G	DAL2,TEC
M8340108^30R0%&	30.0		C,H,K,M,V	G, J	C, G	DAL2,TEC
M8340108^30R1%&	30.1		C,H,K,M,V	F	C, G	DAL2,TEC
M8340108^30R9%&	30.9		C,H,K,M,V	F	C, G	DAL2,TEC
M8340108^31R6%&	31.6	Link at Top	C,H,K,M,V	F	C, G	DAL2,TEC
M8340108^32R4%&	32.4		C,H,K,M,V	F	C, G	DAL2,TEC
M8340108^33R0%&	33.0		C,H,K,M,V	G, J	C, G	DAL2,TEC
M8340108^33R2%&	33.2		C,H,K,M,V	F	C, G	DAL2,TEC

M8340108^34R0%&	34.0		C,H,K,M,V	F	C, G	DAL2,TEC
M8340108^34R8%&	34.8	Link at Top	C,H,K,M,V	F	C, G	DAL2,TEC
M8340108^35R7%&	35.7		C,H,K,M,V	F	C, G	DAL2,TEC
M8340108^36R0%&	36.0		C,H,K,M,V	G, J	C, G	DAL2,TEC
M8340108^36R5%&	36.5		C,H,K,M,V	F	C, G	DAL2,TEC
M8340108^37R4%&	37.4		C,H,K,M,V	F	C, G	DAL2,TEC
M8340108^38R3%&	38.3	Link at Top	C,H,K,M,V	F	C, G	DAL2,TEC
M8340108^39R0%&	39.0		C,H,K,M,V	G, J	C, G	DAL2,TEC
M8340108^39R2%&	39.2		C,H,K,M,V	F	C, G	DAL2,TEC
M8340108^40R2%&	40.2		C,H,K,M,V	F	C, G	DAL2,TEC
M8340108^41R2%&	41.2		C,H,K,M,V	F	C, G	DAL2,TEC
M8340108^42R2%&	42.2	Link at Top	C,H,K,M,V	F	C, G	DAL2,TEC
M8340108^43R0%&	43.0		C,H,K,M,V	G, J	C, G	DAL2,TEC
M8340108^43R2%&	43.2		C,H,K,M,V	F	C, G	DAL2,TEC
M8340108^44R2%&	44.2		C,H,K,M,V	F	C, G	DAL2,TEC
M8340108^45R3%&	45.3		C,H,K,M,V	F	C, G	DAL2,TEC
M8340108^46R4%&	46.4	Link at Top	C,H,K,M,V	F	C, G	DAL2,TEC
M8340108^47R0%&	47.0		C,H,K,M,V	G, J	C, G	DAL2,TEC
M8340108^47R5%&	47.5		C,H,K,M,V	F	C, G	DAL2,TEC
M8340108^48R7%&	48.7		C,H,K,M,V	F	C, G	DAL2,TEC
M8340108^49R9%&	49.9		C,H,K,M,V	F	C, G	DAL2,TEC
M8340108^51R0%&	51.0	Link at Top	C,H,K,M,V	G, J	C, G	DAL2,TEC
M8340108^51R1%&	51.1		C,H,K,M,V	F	C, G	DAL2,TEC
M8340108^52R3%&	52.3		C,H,K,M,V	F	C, G	DAL2,TEC
M8340108^53R6%&	53.6		C,H,K,M,V	F	C, G	DAL2,TEC
M8340108^54R9%&	54.9		C,H,K,M,V	F	C, G	DAL2,TEC
M8340108^56R0%&	56.0	Link at Top	C,H,K,M,V	G, J	C, G	DAL2,TEC
M8340108^56R2%&	56.2		C,H,K,M,V	F	C, G	DAL2,TEC
M8340108^57R6%&	57.6		C,H,K,M,V	F	C, G	DAL2,TEC
M8340108^59R0%&	59.0		C,H,K,M,V	F	C, G	DAL2,TEC
M8340108^60R4%&	60.4		C,H,K,M,V	F	C, G	DAL2,TEC
M8340108^61R9%&	61.9	Link at Top	C,H,K,M,V	F	C, G	DAL2,TEC
M8340108^62R0%&	62.0		C,H,K,M,V	G, J	C, G	DAL2,TEC
M8340108^63R4%&	63.4		C,H,K,M,V	F	C, G	DAL2,TEC
M8340108^64R9%&	64.9		C,H,K,M,V	F	C, G	DAL2,TEC
M8340108^66R5%&	66.5		C,H,K,M,V	F	C, G	DAL2,TEC
M8340108^68R0%&	68.0	Link at Top	C,H,K,M,V	G, J	C, G	DAL2,TEC
M8340108^68R1%&	68.1		C,H,K,M,V	F	C, G	DAL2,TEC
M8340108^69R8%&	69.8		C,H,K,M,V	F	C, G	DAL2,TEC
M8340108^71R5%&	71.5		C,H,K,M,V	F	C, G	DAL2,TEC
M8340108^73R2%&	73.2		C,H,K,M,V	F	C, G	DAL2,TEC
M8340108^75R0%&	75.0	Link at Top	C,H,K,M,V	F, G, J	C, G	DAL2,TEC
M8340108^76R8%&	76.8		C,H,K,M,V	F	C, G	DAL2,TEC
M8340108^78R7%&	78.7		C,H,K,M,V	F	C, G	DAL2,TEC
M8340108^80R6%&	80.6		C,H,K,M,V	F	C, G	DAL2,TEC
M8340108^82R0%&	82.0		C,H,K,M,V	G, J	C, G	DAL2,TEC
M8340108^82R5%&	82.5	Link at Top	C,H,K,M,V	F	C, G	DAL2,TEC

M8340108^84R5%&	84.5		C,H,K,M,V	F	C, G	DAL2,TEC
M8340108^86R6%&	86.6		C,H,K,M,V	F	C, G	DAL2,TEC
M8340108^88R7%&	88.7		C,H,K,M,V	F	C, G	DAL2,TEC
M8340108^90R9%&	90.9		C,H,K,M,V	F	C, G	DAL2,TEC
M8340108^91R0%&	91.0	Link at Top	C,H,K,M,V	G, J	C, G	DAL2,TEC
M8340108^93R1%&	93.1		C,H,K,M,V	F	C, G	DAL2,TEC
M8340108^95R3%&	95.3		C,H,K,M,V	F	C, G	DAL2,TEC
M8340108^97R6%&	97.6		C,H,K,M,V	F	C, G	DAL2,TEC
M8340108^1000%&	100		C,H,K,M,V	B, D, F, G, J	C, G	DAL2,IRC2,TEC
M8340108^1010%&	101	Link at Top	C,H,K,M,V	B, D	C, G	DAL2,IRC2,TEC
M8340108^1020%&	102		C,H,K,M,V	B, D, F	C, G	DAL2,IRC2,TEC
M8340108^1040%&	104		C,H,K,M,V	B, D	C, G	DAL2,IRC2,TEC
M8340108^1050%&	105		C,H,K,M,V	B, D, F	C, G	DAL2,IRC2,TEC
M8340108^1060%&	106		C,H,K,M,V	B, D	C, G	DAL2,IRC2,TEC
M8340108^1070%&	107	Link at Top	C,H,K,M,V	B, D, F	C, G	DAL2,IRC2,TEC
M8340108^1090%&	109		C,H,K,M,V	B, D	C, G	DAL2,IRC2,TEC
M8340108^1100%&	110		C,H,K,M,V	B, D, F, G, J	C, G	DAL2,IRC2,TEC
M8340108^1110%&	111		C,H,K,M,V	B, D	C, G	DAL2,IRC2,TEC
M8340108^1130%&	113		C,H,K,M,V	B, D, F	C, G	DAL2,IRC2,TEC
M8340108^1140%&	114	Link at Top	C,H,K,M,V	B, D	C, G	DAL2,IRC2,TEC
M8340108^1150%&	115		C,H,K,M,V	B, D, F	C, G	DAL2,IRC2,TEC
M8340108^1170%&	117		C,H,K,M,V	B, D	C, G	DAL2,IRC2,TEC
M8340108^1180%&	118		C,H,K,M,V	B, D, F	C, G	DAL2,IRC2,TEC
M8340108^1200%&	120		C,H,K,M,V	B, D, F, G, J	C, G	DAL2,IRC2,TEC
M8340108^1210%&	121	Link at Top	C,H,K,M,V	B, D, F	C, G	DAL2,IRC2,TEC
M8340108^1230%&	123		C,H,K,M,V	B, D	C, G	DAL2,IRC2,TEC
M8340108^1240%&	124		C,H,K,M,V	B, D, F	C, G	DAL2,IRC2,TEC
M8340108^1260%&	126		C,H,K,M,V	B, D	C, G	DAL2,IRC2,TEC
M8340108^1270%&	127		C,H,K,M,V	B, D, F	C, G	DAL2,IRC2,TEC
M8340108^1290%&	129	Link at Top	C,H,K,M,V	B, D	C, G	DAL2,IRC2,TEC
M8340108^1300%&	130		C,H,K,M,V	B, D, F, G, J	C, G	DAL2,IRC2,TEC
M8340108^1320%&	132		C,H,K,M,V	B, D	C, G	DAL2,IRC2,TEC
M8340108^1330%&	133		C,H,K,M,V	B, D, F	C, G	DAL2,IRC2,TEC
M8340108^1350%&	135	Link at Top	C,H,K,M,V	B, D	C, G	DAL2,IRC2,TEC
M8340108^1370%&	137		C,H,K,M,V	B, D, F	C, G	DAL2,IRC2,TEC
M8340108^1380%&	138		C,H,K,M,V	B, D	C, G	DAL2,IRC2,TEC
M8340108^1400%&	140		C,H,K,M,V	B, D, F	C, G	DAL2,IRC2,TEC
M8340108^1420%&	142		C,H,K,M,V	B, D	C, G	DAL2,IRC2,TEC
M8340108^1430%&	143	Link at Top	C,H,K,M,V	B, D, F	C, G	DAL2,IRC2,TEC
M8340108^1450%&	145		C,H,K,M,V	B, D	C, G	DAL2,IRC2,TEC
M8340108^1470%&	147		C,H,K,M,V	B, D, F	C, G	DAL2,IRC2,TEC
M8340108^1490%&	149		C,H,K,M,V	B, D	C, G	DAL2,IRC2,TEC
M8340108^1500%&	150		C,H,K,M,V	B, D, F, G, J	C, G	DAL2,IRC2,TEC
M8340108^1520%&	152	Link at Top	C,H,K,M,V	B, D	C, G	DAL2,IRC2,TEC
M8340108^1540%&	154		C,H,K,M,V	B, D, F	C, G	DAL2,IRC2,TEC
M8340108^1560%&	156		C,H,K,M,V	B, D	C, G	DAL2,IRC2,TEC
M8340108^1580%&	158		C,H,K,M,V	B, D, F	C, G	DAL2,IRC2,TEC

M8340108^1600%&	160		C,H,K,M,V	B, D, G, J	C, G	DAL2,IRC2,TEC
M8340108^1620%&	162	Link at Top	C,H,K,M,V	B, D, F	C, G	DAL2,IRC2,TEC
M8340108^1640%&	164		C,H,K,M,V	B, D	C, G	DAL2,IRC2,TEC
M8340108^1650%&	165		C,H,K,M,V	B, D, F	C, G	DAL2,IRC2,TEC
M8340108^1670%&	167		C,H,K,M,V	B, D	C, G	DAL2,IRC2,TEC
M8340108^1690%&	169		C,H,K,M,V	B, D, F	C, G	DAL2,IRC2,TEC
M8340108^1720%&	172	Link at Top	C,H,K,M,V	B, D	C, G	DAL2,IRC2,TEC
M8340108^1740%&	174		C,H,K,M,V	B, D, F	C, G	DAL2,IRC2,TEC
M8340108^1760%&	176		C,H,K,M,V	B, D	C, G	DAL2,IRC2,TEC
M8340108^1780%&	178		C,H,K,M,V	B, D, F	C, G	DAL2,IRC2,TEC
M8340108^1800%&	180		C,H,K,M,V	B, D, G, J	C, G	DAL2,IRC2,TEC
M8340108^1820%&	182	Link at Top	C,H,K,M,V	B, D, F	C, G	DAL2,IRC2,TEC
M8340108^1840%&	184		C,H,K,M,V	B, D	C, G	DAL2,IRC2,TEC
M8340108^1870%&	187		C,H,K,M,V	B, D, F	C, G	DAL2,IRC2,TEC
M8340108^1890%&	189		C,H,K,M,V	B, D	C, G	DAL2,IRC2,TEC
M8340108^1910%&	191		C,H,K,M,V	B, D, F	C, G	DAL2,IRC2,TEC
M8340108^1930%&	193	Link at Top	C,H,K,M,V	B, D	C, G	DAL2,IRC2,TEC
M8340108^1960%&	196		C,H,K,M,V	B, D, F	C, G	DAL2,IRC2,TEC
M8340108^1980%&	198		C,H,K,M,V	B, D	C, G	DAL2,IRC2,TEC
M8340108^2000%&	200		C,H,K,M,V	B, D, F, G, J	C, G	DAL2,IRC2,TEC
M8340108^2030%&	203		C,H,K,M,V	B, D	C, G	DAL2,IRC2,TEC
M8340108^2050%&	205	Link at Top	C,H,K,M,V	B, D, F	C, G	DAL2,IRC2,TEC
M8340108^2080%&	208		C,H,K,M,V	B, D	C, G	DAL2,IRC2,TEC
M8340108^2100%&	210		C,H,K,M,V	B, D, F	C, G	DAL2,IRC2,TEC
M8340108^2130%&	213		C,H,K,M,V	B, D	C, G	DAL2,IRC2,TEC
M8340108^2150%&	215		C,H,K,M,V	B, D, F	C, G	DAL2,IRC2,TEC
M8340108^2180%&	218	Link at Top	C,H,K,M,V	B, D	C, G	DAL2,IRC2,TEC
M8340108^2200%&	220		C,H,K,M,V	G, J	C, G	DAL2,IRC2,TEC
M8340108^2210%&	221		C,H,K,M,V	B, D, F	C, G	DAL2,IRC2,TEC
M8340108^2230%&	223		C,H,K,M,V	B, D	C, G	DAL2,IRC2,TEC
M8340108^2260%&	226		C,H,K,M,V	B, D, F	C, G	DAL2,IRC2,TEC
M8340108^2290%&	229	Link at Top	C,H,K,M,V	B, D	C, G	DAL2,IRC2,TEC
M8340108^2320%&	232		C,H,K,M,V	B, D, F	C, G	DAL2,IRC2,TEC
M8340108^2340%&	234		C,H,K,M,V	B, D	C, G	DAL2,IRC2,TEC
M8340108^2370%&	237		C,H,K,M,V	B, D, F	C, G	DAL2,IRC2,TEC
M8340108^2400%&	240		C,H,K,M,V	B, D, F, G, J	C, G	DAL2,IRC2,TEC
M8340108^2430%&	243	Link at Top	C,H,K,M,V	B, D, F	C, G	DAL2,IRC2,TEC
M8340108^2460%&	246		C,H,K,M,V	B, D	C, G	DAL2,IRC2,TEC
M8340108^2490%&	249		C,H,K,M,V	B, D, F	C, G	DAL2,IRC2,TEC
M8340108^2520%&	252		C,H,K,M,V	B, D	C, G	DAL2,IRC2,TEC
M8340108^2550%&	255		C,H,K,M,V	B, D, F	C, G	DAL2,IRC2,TEC
M8340108^2580%&	258	Link at Top	C,H,K,M,V	B, D	C, G	DAL2,IRC2,TEC
M8340108^2610%&	261		C,H,K,M,V	B, D, F	C, G	DAL2,IRC2,TEC
M8340108^2640%&	264		C,H,K,M,V	B, D	C, G	DAL2,IRC2,TEC
M8340108^2670%&	267		C,H,K,M,V	B, D, F	C, G	DAL2,IRC2,TEC
M8340108^2700%&	270		C,H,K,M,V	G, J	C, G	DAL2,IRC2,TEC
M8340108^2710%&	271	Link at Top	C,H,K,M,V	B, D	C, G	DAL2,IRC2,TEC

M8340108^2740%&	274		C,H,K,M,V	B, D, F	C, G	DAL2,IRC2,TEC
M8340108^2770%&	277		C,H,K,M,V	B, D	C, G	DAL2,IRC2,TEC
M8340108^2800%&	280		C,H,K,M,V	B, D, F	C, G	DAL2,IRC2,TEC
M8340108^2840%&	284		C,H,K,M,V	B, D	C, G	DAL2,IRC2,TEC
M8340108^2870%&	287	Link at Top	C,H,K,M,V	B, D, F	C, G	DAL2,IRC2,TEC
M8340108^2910%&	291		C,H,K,M,V	B, D	C, G	DAL2,IRC2,TEC
M8340108^2940%&	294		C,H,K,M,V	B, D, F	C, G	DAL2,IRC2,TEC
M8340108^2980%&	298		C,H,K,M,V	B, D	C, G	DAL2,IRC2,TEC
M8340108^3000%&	300		C,H,K,M,V	G, J	C, G	DAL2,IRC2,TEC
M8340108^3010%&	301	Link at Top	C,H,K,M,V	B, D, F	C, G	DAL2,IRC2,TEC
M8340108^3050%&	305		C,H,K,M,V	B, D	C, G	DAL2,IRC2,TEC
M8340108^3090%&	309		C,H,K,M,V	B, D, F	C, G	DAL2,IRC2,TEC
M8340108^3120%&	312		C,H,K,M,V	B, D	C, G	DAL2,IRC2,TEC
M8340108^3160%&	316		C,H,K,M,V	B, D, F	C, G	DAL2,IRC2,TEC
M8340108^3200%&	320	Link at Top	C,H,K,M,V	B, D	C, G	DAL2,IRC2,TEC
M8340108^3240%&	324		C,H,K,M,V	B, D, F	C, G	DAL2,IRC2,TEC
M8340108^3280%&	328		C,H,K,M,V	B, D	C, G	DAL2,IRC2,TEC
M8340108^3300%&	330		C,H,K,M,V	G, J	C, G	DAL2,IRC2,TEC
M8340108^3320%&	332		C,H,K,M,V	B, D, F	C, G	DAL2,IRC2,TEC
M8340108^3360%&	336	Link at Top	C,H,K,M,V	B, D	C, G	DAL2,IRC2,TEC
M8340108^3400%&	340		C,H,K,M,V	B, D, F	C, G	DAL2,IRC2,TEC
M8340108^3440%&	344		C,H,K,M,V	B, D	C, G	DAL2,IRC2,TEC
M8340108^3480%&	348		C,H,K,M,V	B, D, F	C, G	DAL2,IRC2,TEC
M8340108^3520%&	352		C,H,K,M,V	B, D	C, G	DAL2,IRC2,TEC
M8340108^3570%&	357	Link at Top	C,H,K,M,V	B, D, F	C, G	DAL2,IRC2,TEC
M8340108^3600%&	360		C,H,K,M,V	G, J	C, G	DAL2,IRC2,TEC
M8340108^3610%&	361		C,H,K,M,V	B, D	C, G	DAL2,IRC2,TEC
M8340108^3650%&	365		C,H,K,M,V	B, D, F	C, G	DAL2,IRC2,TEC
M8340108^3700%&	370		C,H,K,M,V	B, D	C, G	DAL2,IRC2,TEC
M8340108^3740%&	374	Link at Top	C,H,K,M,V	B, D, F	C, G	DAL2,IRC2,TEC
M8340108^3790%&	379		C,H,K,M,V	B, D	C, G	DAL2,IRC2,TEC
M8340108^3830%&	383		C,H,K,M,V	B, D, F	C, G	DAL2,IRC2,TEC
M8340108^3880%&	388		C,H,K,M,V	B, D	C, G	DAL2,IRC2,TEC
M8340108^3900%&	390		C,H,K,M,V	G, J	C, G	DAL2,IRC2,TEC
M8340108^3920%&	392	Link at Top	C,H,K,M,V	B, D, F	C, G	DAL2,IRC2,TEC
M8340108^3970%&	397		C,H,K,M,V	B, D	C, G	DAL2,IRC2,TEC
M8340108^4020%&	402		C,H,K,M,V	B, D, F	C, G	DAL2,IRC2,TEC
M8340108^4070%&	407		C,H,K,M,V	B, D	C, G	DAL2,IRC2,TEC
M8340108^4120%&	412		C,H,K,M,V	B, D, F	C, G	DAL2,IRC2,TEC
M8340108^4170%&	417	Link at Top	C,H,K,M,V	B, D	C, G	DAL2,IRC2,TEC
M8340108^4220%&	422		C,H,K,M,V	B, D, F	C, G	DAL2,IRC2,TEC
M8340108^4270%&	427		C,H,K,M,V	B, D	C, G	DAL2,IRC2,TEC
M8340108^4300%&	430		C,H,K,M,V	G, J	C, G	DAL2,IRC2,TEC
M8340108^4320%&	432		C,H,K,M,V	B, D, F	C, G	DAL2,IRC2,TEC
M8340108^4370%&	437	Link at Top	C,H,K,M,V	B, D	C, G	DAL2,IRC2,TEC
M8340108^4420%&	442		C,H,K,M,V	B, D, F	C, G	DAL2,IRC2,TEC
M8340108^4480%&	448		C,H,K,M,V	B, D	C, G	DAL2,IRC2,TEC

M8340108^4530%&	453		C,H,K,M,V	B, D, F	C, G	DAL2,IRC2,TEC
M8340108^4590%&	459		C,H,K,M,V	B, D	C, G	DAL2,IRC2,TEC
M8340108^4640%&	464	Link at Top	C,H,K,M,V	B, D, F	C, G	DAL2,IRC2,TEC
M8340108^4700%&	470		C,H,K,M,V	B, D, G, J	C, G	DAL2,IRC2,TEC
M8340108^4750%&	475		C,H,K,M,V	B, D, F	C, G	DAL2,IRC2,TEC
M8340108^4810%&	481		C,H,K,M,V	B, D	C, G	DAL2,IRC2,TEC
M8340108^4870%&	487		C,H,K,M,V	B, D, F	C, G	DAL2,IRC2,TEC
M8340108^4930%&	493	Link at Top	C,H,K,M,V	B, D	C, G	DAL2,IRC2,TEC
M8340108^4990%&	499		C,H,K,M,V	B, D, F	C, G	DAL2,IRC2,TEC
M8340108^5050%&	505		C,H,K,M,V	B, D	C, G	DAL2,IRC2,TEC
M8340108^5100%&	510		C,H,K,M,V	G, J	C, G	DAL2,IRC2,TEC
M8340108^5110%&	511		C,H,K,M,V	B, D, F	C, G	DAL2,IRC2,TEC
M8340108^5170%&	517	Link at Top	C,H,K,M,V	B, D	C, G	DAL2,IRC2,TEC
M8340108^5230%&	523		C,H,K,M,V	B, D, F	C, G	DAL2,IRC2,TEC
M8340108^5300%&	530		C,H,K,M,V	B, D	C, G	DAL2,IRC2,TEC
M8340108^5360%&	536		C,H,K,M,V	B, D, F	C, G	DAL2,IRC2,TEC
M8340108^5420%&	542		C,H,K,M,V	B, D	C, G	DAL2,IRC2,TEC
M8340108^5490%&	549	Link at Top	C,H,K,M,V	B, D, F	C, G	DAL2,IRC2,TEC
M8340108^5560%&	556		C,H,K,M,V	B, D	C, G	DAL2,IRC2,TEC
M8340108^5600%&	560		C,H,K,M,V	G, J	C, G	DAL2,IRC2,TEC
M8340108^5620%&	562		C,H,K,M,V	B, D, F	C, G	DAL2,IRC2,TEC
M8340108^5690%&	569		C,H,K,M,V	B, D	C, G	DAL2,IRC2,TEC
M8340108^5760%&	576	Link at Top	C,H,K,M,V	B, D, F	C, G	DAL2,IRC2,TEC
M8340108^5830%&	583		C,H,K,M,V	B, D	C, G	DAL2,IRC2,TEC
M8340108^5900%&	590		C,H,K,M,V	B, D, F	C, G	DAL2,IRC2,TEC
M8340108^5970%&	597		C,H,K,M,V	B, D	C, G	DAL2,IRC2,TEC
M8340108^6040%&	604		C,H,K,M,V	B, D, F	C, G	DAL2,IRC2,TEC
M8340108^6120%&	612	Link at Top	C,H,K,M,V	B, D	C, G	DAL2,IRC2,TEC
M8340108^6190%&	619		C,H,K,M,V	B, D, F	C, G	DAL2,IRC2,TEC
M8340108^6200%&	620		C,H,K,M,V	G, J	C, G	DAL2,IRC2,TEC
M8340108^6260%&	626		C,H,K,M,V	B, D	C, G	DAL2,IRC2,TEC
M8340108^6340%&	634		C,H,K,M,V	B, D, F	C, G	DAL2,IRC2,TEC
M8340108^6420%&	642	Link at Top	C,H,K,M,V	B, D	C, G	DAL2,IRC2,TEC
M8340108^6490%&	649		C,H,K,M,V	B, D, F	C, G	DAL2,IRC2,TEC
M8340108^6570%&	657		C,H,K,M,V	B, D	C, G	DAL2,IRC2,TEC
M8340108^6650%&	665		C,H,K,M,V	B, D, F	C, G	DAL2,IRC2,TEC
M8340108^6730%&	673		C,H,K,M,V	B, D	C, G	DAL2,IRC2,TEC
M8340108^6800%&	680	Link at Top	C,H,K,M,V	G, J	C, G	DAL2,IRC2,TEC
M8340108^6810%&	681		C,H,K,M,V	B, D, F	C, G	DAL2,IRC2,TEC
M8340108^6900%&	690		C,H,K,M,V	B, D	C, G	DAL2,IRC2,TEC
M8340108^6980%&	698		C,H,K,M,V	B, D, F	C, G	DAL2,IRC2,TEC
M8340108^7060%&	706		C,H,K,M,V	B, D	C, G	DAL2,IRC2,TEC
M8340108^7150%&	715	Link at Top	C,H,K,M,V	B, D, F	C, G	DAL2,IRC2,TEC
M8340108^7230%&	723		C,H,K,M,V	B, D	C, G	DAL2,IRC2,TEC
M8340108^7320%&	732		C,H,K,M,V	B, D, F	C, G	DAL2,IRC2,TEC
M8340108^7410%&	741		C,H,K,M,V	B, D	C, G	DAL2,IRC2,TEC
M8340108^7500%&	750		C,H,K,M,V	B, D, F, G, J	C, G	DAL2,IRC2,TEC

M8340108^7590%&	759	Link at Top	C,H,K,M,V	B, D	C, G	DAL2,IRC2,TEC
M8340108^7680%&	768		C,H,K,M,V	B, D, F	C, G	DAL2,IRC2,TEC
M8340108^7770%&	777		C,H,K,M,V	B, D	C, G	DAL2,IRC2,TEC
M8340108^7870%&	787		C,H,K,M,V	B, D, F	C, G	DAL2,IRC2,TEC
M8340108^7960%&	796		C,H,K,M,V	B, D	C, G	DAL2,IRC2,TEC
M8340108^8060%&	806	Link at Top	C,H,K,M,V	B, D, F	C, G	DAL2,IRC2,TEC
M8340108^8160%&	816		C,H,K,M,V	B, D	C, G	DAL2,IRC2,TEC
M8340108^8200%&	820		C,H,K,M,V	G, J	C, G	DAL2,IRC2,TEC
M8340108^8250%&	825		C,H,K,M,V	B, D, F	C, G	DAL2,IRC2,TEC
M8340108^8350%&	835		C,H,K,M,V	B, D	C, G	DAL2,IRC2,TEC
M8340108^8450%&	845	Link at Top	C,H,K,M,V	B, D, F	C, G	DAL2,IRC2,TEC
M8340108^8560%&	856		C,H,K,M,V	B, D	C, G	DAL2,IRC2,TEC
M8340108^8660%&	866		C,H,K,M,V	B, D, F	C, G	DAL2,IRC2,TEC
M8340108^8760%&	876		C,H,K,M,V	B, D	C, G	DAL2,IRC2,TEC
M8340108^8870%&	887		C,H,K,M,V	B, D, F	C, G	DAL2,IRC2,TEC
M8340108^8980%&	898	Link at Top	C,H,K,M,V	B, D	C, G	DAL2,IRC2,TEC
M8340108^9090%&	909		C,H,K,M,V	B, D, F	C, G	DAL2,IRC2,TEC
M8340108^9100%&	910		C,H,K,M,V	G, J	C, G	DAL2,IRC2,TEC
M8340108^9200%&	920		C,H,K,M,V	B, D	C, G	DAL2,IRC2,TEC
M8340108^9310%&	931		C,H,K,M,V	B, D, F	C, G	DAL2,IRC2,TEC
M8340108^9420%&	942	Link at Top	C,H,K,M,V	B, D	C, G	DAL2,IRC2,TEC
M8340108^9530%&	953		C,H,K,M,V	B, D, F	C, G	DAL2,IRC2,TEC
M8340108^9650%&	965		C,H,K,M,V	B, D	C, G	DAL2,IRC2,TEC
M8340108^9760%&	976		C,H,K,M,V	B, D, F	C, G	DAL2,IRC2,TEC
M8340108^9880%&	988		C,H,K,M,V	B, D	C, G	DAL2,IRC2,TEC
M8340108^1001%&	1,000	Link at Top	C,H,K,M,V	B, D, F, G, J	C, G	DAL2,IRC2,TEC
M8340108^1011%&	1,010		C,H,K,M,V	B, D	C, G	DAL2,IRC2,TEC
M8340108^1021%&	1,020		C,H,K,M,V	B, D, F	C, G	DAL2,IRC2,TEC
M8340108^1041%&	1,040		C,H,K,M,V	B, D	C, G	DAL2,IRC2,TEC
M8340108^1051%&	1,050		C,H,K,M,V	B, D, F	C, G	DAL2,IRC2,TEC
M8340108^1061%&	1,060	Link at Top	C,H,K,M,V	B, D	C, G	DAL2,IRC2,TEC
M8340108^1071%&	1,070		C,H,K,M,V	B, D, F	C, G	DAL2,IRC2,TEC
M8340108^1091%&	1,090		C,H,K,M,V	B, D	C, G	DAL2,IRC2,TEC
M8340108^1101%&	1,100		C,H,K,M,V	B, D, F, G, J	C, G	DAL2,IRC2,TEC
M8340108^1111%&	1,110		C,H,K,M,V	B, D	C, G	DAL2,IRC2,TEC
M8340108^1131%&	1,130	Link at Top	C,H,K,M,V	B, D, F	C, G	DAL2,IRC2,TEC
M8340108^1141%&	1,140		C,H,K,M,V	B, D	C, G	DAL2,IRC2,TEC
M8340108^1151%&	1,150		C,H,K,M,V	B, D, F	C, G	DAL2,IRC2,TEC
M8340108^1171%&	1,170		C,H,K,M,V	B, D	C, G	DAL2,IRC2,TEC
M8340108^1181%&	1,180		C,H,K,M,V	B, D, F	C, G	DAL2,IRC2,TEC
M8340108^1201%&	1,200	Link at Top	C,H,K,M,V	B, D, F, G, J	C, G	DAL2,IRC2,TEC
M8340108^1211%&	1,210		C,H,K,M,V	B, D, F	C, G	DAL2,IRC2,TEC
M8340108^1231%&	1,230		C,H,K,M,V	B, D	C, G	DAL2,IRC2,TEC
M8340108^1241%&	1,240		C,H,K,M,V	B, D, F	C, G	DAL2,IRC2,TEC
M8340108^1261%&	1,260		C,H,K,M,V	B, D	C, G	DAL2,IRC2,TEC
M8340108^1271%&	1,270	Link at Top	C,H,K,M,V	B, D, F	C, G	DAL2,IRC2,TEC
M8340108^1291%&	1,290		C,H,K,M,V	B, D	C, G	DAL2,IRC2,TEC

M8340108^1301%&	1,300		C,H,K,M,V	B, D, F, G, J	C, G	DAL2,IRC2,TEC
M8340108^1321%&	1,320		C,H,K,M,V	B, D	C, G	DAL2,IRC2,TEC
M8340108^1331%&	1,330		C,H,K,M,V	B, D, F	C, G	DAL2,IRC2,TEC
M8340108^1351%&	1,350	Link at Top	C,H,K,M,V	B, D	C, G	DAL2,IRC2,TEC
M8340108^1371%&	1,370		C,H,K,M,V	B, D, F	C, G	DAL2,IRC2,TEC
M8340108^1381%&	1,380		C,H,K,M,V	B, D	C, G	DAL2,IRC2,TEC
M8340108^1401%&	1,400		C,H,K,M,V	B, D, F	C, G	DAL2,IRC2,TEC
M8340108^1421%&	1,420		C,H,K,M,V	B, D	C, G	DAL2,IRC2,TEC
M8340108^1431%&	1,430	Link at Top	C,H,K,M,V	B, D, F	C, G	DAL2,IRC2,TEC
M8340108^1451%&	1,450		C,H,K,M,V	B, D	C, G	DAL2,IRC2,TEC
M8340108^1471%&	1,470		C,H,K,M,V	B, D, F	C, G	DAL2,IRC2,TEC
M8340108^1491%&	1,490		C,H,K,M,V	B, D	C, G	DAL2,IRC2,TEC
M8340108^1501%&	1,500		C,H,K,M,V	B, D, F, G, J	C, G	DAL2,IRC2,TEC
M8340108^1521%&	1,520	Link at Top	C,H,K,M,V	B, D	C, G	DAL2,IRC2,TEC
M8340108^1541%&	1,540		C,H,K,M,V	B, D, F	C, G	DAL2,IRC2,TEC
M8340108^1561%&	1,560		C,H,K,M,V	B, D	C, G	DAL2,IRC2,TEC
M8340108^1581%&	1,580		C,H,K,M,V	B, D, F	C, G	DAL2,IRC2,TEC
M8340108^1601%&	1,600		C,H,K,M,V	B, D, G, J	C, G	DAL2,IRC2,TEC
M8340108^1621%&	1,620	Link at Top	C,H,K,M,V	B, D, F	C, G	DAL2,IRC2,TEC
M8340108^1641%&	1,640		C,H,K,M,V	B, D	C, G	DAL2,IRC2,TEC
M8340108^1651%&	1,650		C,H,K,M,V	B, D, F	C, G	DAL2,IRC2,TEC
M8340108^1671%&	1,670		C,H,K,M,V	B, D	C, G	DAL2,IRC2,TEC
M8340108^1691%&	1,690		C,H,K,M,V	B, D, F	C, G	DAL2,IRC2,TEC
M8340108^1721%&	1,720	Link at Top	C,H,K,M,V	B, D	C, G	DAL2,IRC2,TEC
M8340108^1741%&	1,740		C,H,K,M,V	B, D, F	C, G	DAL2,IRC2,TEC
M8340108^1761%&	1,760		C,H,K,M,V	B, D	C, G	DAL2,IRC2,TEC
M8340108^1781%&	1,780		C,H,K,M,V	B, D, F	C, G	DAL2,IRC2,TEC
M8340108^1801%&	1,800		C,H,K,M,V	B, D, G, J	C, G	DAL2,IRC2,TEC
M8340108^1821%&	1,820	Link at Top	C,H,K,M,V	B, D, F	C, G	DAL2,IRC2,TEC
M8340108^1841%&	1,840		C,H,K,M,V	B, D	C, G	DAL2,IRC2,TEC
M8340108^1871%&	1,870		C,H,K,M,V	B, D, F	C, G	DAL2,IRC2,TEC
M8340108^1891%&	1,890		C,H,K,M,V	B, D	C, G	DAL2,IRC2,TEC
M8340108^1911%&	1,910		C,H,K,M,V	B, D, F	C, G	DAL2,IRC2,TEC
M8340108^1931%&	1,930	Link at Top	C,H,K,M,V	B, D	C, G	DAL2,IRC2,TEC
M8340108^1961%&	1,960		C,H,K,M,V	B, D, F	C, G	DAL2,IRC2,TEC
M8340108^1981%&	1,980		C,H,K,M,V	B, D	C, G	DAL2,IRC2,TEC
M8340108^2001%&	2,000		C,H,K,M,V	B, D, F, G, J	C, G	DAL2,IRC2,TEC
M8340108^2031%&	2,030		C,H,K,M,V	B, D	C, G	DAL2,IRC2,TEC
M8340108^2051%&	2,050	Link at Top	C,H,K,M,V	B, D, F	C, G	DAL2,IRC2,TEC
M8340108^2081%&	2,080		C,H,K,M,V	B, D	C, G	DAL2,IRC2,TEC
M8340108^2101%&	2,100		C,H,K,M,V	B, D, F	C, G	DAL2,IRC2,TEC
M8340108^2131%&	2,130		C,H,K,M,V	B, D	C, G	DAL2,IRC2,TEC
M8340108^2151%&	2,150		C,H,K,M,V	B, D, F	C, G	DAL2,IRC2,TEC
M8340108^2181%&	2,180	Link at Top	C,H,K,M,V	B, D	C, G	DAL2,IRC2,TEC
M8340108^2201%&	2,200		C,H,K,M,V	G, J	C, G	DAL2,IRC2,TEC
M8340108^2211%&	2,210		C,H,K,M,V	B, D, F	C, G	DAL2,IRC2,TEC
M8340108^2231%&	2,230		C,H,K,M,V	B, D	C, G	DAL2,IRC2,TEC

M8340108^2261%&	2,260		C,H,K,M,V	B, D, F	C, G	DAL2,IRC2,TEC
M8340108^2291%&	2,290	Link at Top	C,H,K,M,V	B, D	C, G	DAL2,IRC2,TEC
M8340108^2321%&	2,320		C,H,K,M,V	B, D, F	C, G	DAL2,IRC2,TEC
M8340108^2341%&	2,340		C,H,K,M,V	B, D	C, G	DAL2,IRC2,TEC
M8340108^2371%&	2,370		C,H,K,M,V	B, D, F	C, G	DAL2,IRC2,TEC
M8340108^2401%&	2,400		C,H,K,M,V	B, D, F, G, J	C, G	DAL2,IRC2,TEC
M8340108^2431%&	2,430	Link at Top	C,H,K,M,V	B, D, F	C, G	DAL2,IRC2,TEC
M8340108^2461%&	2,460		C,H,K,M,V	B, D	C, G	DAL2,IRC2,TEC
M8340108^2491%&	2,490		C,H,K,M,V	B, D, F	C, G	DAL2,IRC2,TEC
M8340108^2521%&	2,520		C,H,K,M,V	B, D	C, G	DAL2,IRC2,TEC
M8340108^2551%&	2,550		C,H,K,M,V	B, D, F	C, G	DAL2,IRC2,TEC
M8340108^2581%&	2,580	Link at Top	C,H,K,M,V	B, D	C, G	DAL2,IRC2,TEC
M8340108^2611%&	2,610		C,H,K,M,V	B, D, F	C, G	DAL2,IRC2,TEC
M8340108^2641%&	2,640		C,H,K,M,V	B, D	C, G	DAL2,IRC2,TEC
M8340108^2671%&	2,670		C,H,K,M,V	B, D, F	C, G	DAL2,IRC2,TEC
M8340108^2701%&	2,700		C,H,K,M,V	G, J	C, G	DAL2,IRC2,TEC
M8340108^2711%&	2,710	Link at Top	C,H,K,M,V	B, D	C, G	DAL2,IRC2,TEC
M8340108^2741%&	2,740		C,H,K,M,V	B, D, F	C, G	DAL2,IRC2,TEC
M8340108^2771%&	2,770		C,H,K,M,V	B, D	C, G	DAL2,IRC2,TEC
M8340108^2801%&	2,800		C,H,K,M,V	B, D, F	C, G	DAL2,IRC2,TEC
M8340108^2841%&	2,840		C,H,K,M,V	B, D	C, G	DAL2,IRC2,TEC
M8340108^2871%&	2,870	Link at Top	C,H,K,M,V	B, D, F	C, G	DAL2,IRC2,TEC
M8340108^2911%&	2,910		C,H,K,M,V	B, D	C, G	DAL2,IRC2,TEC
M8340108^2941%&	2,940		C,H,K,M,V	B, D, F	C, G	DAL2,IRC2,TEC
M8340108^2981%&	2,980		C,H,K,M,V	B, D	C, G	DAL2,IRC2,TEC
M8340108^3001%&	3,000		C,H,K,M,V	G, J	C, G	DAL2,IRC2,TEC
M8340108^3011%&	3,010	Link at Top	C,H,K,M,V	B, D, F	C, G	DAL2,IRC2,TEC
M8340108^3051%&	3,050		C,H,K,M,V	B, D	C, G	DAL2,IRC2,TEC
M8340108^3091%&	3,090		C,H,K,M,V	B, D, F	C, G	DAL2,IRC2,TEC
M8340108^3121%&	3,120		C,H,K,M,V	B, D	C, G	DAL2,IRC2,TEC
M8340108^3161%&	3,160		C,H,K,M,V	B, D, F	C, G	DAL2,IRC2,TEC
M8340108^3201%&	3,200	Link at Top	C,H,K,M,V	B, D	C, G	DAL2,IRC2,TEC
M8340108^3241%&	3,240		C,H,K,M,V	B, D, F	C, G	DAL2,IRC2,TEC
M8340108^3281%&	3,280		C,H,K,M,V	B, D	C, G	DAL2,IRC2,TEC
M8340108^3301%&	3,300		C,H,K,M,V	G, J	C, G	DAL2,IRC2,TEC
M8340108^3321%&	3,320		C,H,K,M,V	B, D, F	C, G	DAL2,IRC2,TEC
M8340108^3361%&	3,360	Link at Top	C,H,K,M,V	B, D	C, G	DAL2,IRC2,TEC
M8340108^3401%&	3,400		C,H,K,M,V	B, D, F	C, G	DAL2,IRC2,TEC
M8340108^3441%&	3,440		C,H,K,M,V	B, D	C, G	DAL2,IRC2,TEC
M8340108^3481%&	3,480		C,H,K,M,V	B, D, F	C, G	DAL2,IRC2,TEC
M8340108^3521%&	3,520		C,H,K,M,V	B, D	C, G	DAL2,IRC2,TEC
M8340108^3571%&	3,570	Link at Top	C,H,K,M,V	B, D, F	C, G	DAL2,IRC2,TEC
M8340108^3601%&	3,600		C,H,K,M,V	G, J	C, G	DAL2,IRC2,TEC
M8340108^3611%&	3,610		C,H,K,M,V	B, D	C, G	DAL2,IRC2,TEC
M8340108^3651%&	3,650		C,H,K,M,V	B, D, F	C, G	DAL2,IRC2,TEC
M8340108^3701%&	3,700		C,H,K,M,V	B, D	C, G	DAL2,IRC2,TEC
M8340108^3741%&	3,740	Link at Top	C,H,K,M,V	B, D, F	C, G	DAL2,IRC2,TEC

M8340108^3791%&	3,790		C,H,K,M,V	B, D	C, G	DAL2,IRC2,TEC
M8340108^3831%&	3,830		C,H,K,M,V	B, D, F	C, G	DAL2,IRC2,TEC
M8340108^3881%&	3,880		C,H,K,M,V	B, D	C, G	DAL2,IRC2,TEC
M8340108^3901%&	3,900		C,H,K,M,V	G, J	C, G	DAL2,IRC2,TEC
M8340108^3921%&	3,920	Link at Top	C,H,K,M,V	B, D, F	C, G	DAL2,IRC2,TEC
M8340108^3971%&	3,970		C,H,K,M,V	B, D	C, G	DAL2,IRC2,TEC
M8340108^4021%&	4,020		C,H,K,M,V	B, D, F	C, G	DAL2,IRC2,TEC
M8340108^4071%&	4,070		C,H,K,M,V	B, D	C, G	DAL2,IRC2,TEC
M8340108^4121%&	4,120		C,H,K,M,V	B, D, F	C, G	DAL2,IRC2,TEC
M8340108^4171%&	4,170	Link at Top	C,H,K,M,V	B, D	C, G	DAL2,IRC2,TEC
M8340108^4221%&	4,220		C,H,K,M,V	B, D, F	C, G	DAL2,IRC2,TEC
M8340108^4271%&	4,270		C,H,K,M,V	B, D	C, G	DAL2,IRC2,TEC
M8340108^4301%&	4,300		C,H,K,M,V	G, J	C, G	DAL2,IRC2,TEC
M8340108^4321%&	4,320		C,H,K,M,V	B, D, F	C, G	DAL2,IRC2,TEC
M8340108^4371%&	4,370	Link at Top	C,H,K,M,V	B, D	C, G	DAL2,IRC2,TEC
M8340108^4421%&	4,420		C,H,K,M,V	B, D, F	C, G	DAL2,IRC2,TEC
M8340108^4481%&	4,480		C,H,K,M,V	B, D	C, G	DAL2,IRC2,TEC
M8340108^4531%&	4,530		C,H,K,M,V	B, D, F	C, G	DAL2,IRC2,TEC
M8340108^4591%&	4,590		C,H,K,M,V	B, D	C, G	DAL2,IRC2,TEC
M8340108^4641%&	4,640	Link at Top	C,H,K,M,V	B, D, F	C, G	DAL2,IRC2,TEC
M8340108^4701%&	4,700		C,H,K,M,V	B, D, G, J	C, G	DAL2,IRC2,TEC
M8340108^4751%&	4,750		C,H,K,M,V	B, D, F	C, G	DAL2,IRC2,TEC
M8340108^4811%&	4,810		C,H,K,M,V	B, D	C, G	DAL2,IRC2,TEC
M8340108^4871%&	4,870		C,H,K,M,V	B, D, F	C, G	DAL2,IRC2,TEC
M8340108^4931%&	4,930	Link at Top	C,H,K,M,V	B, D	C, G	DAL2,IRC2,TEC
M8340108^4991%&	4,990		C,H,K,M,V	B, D, F	C, G	DAL2,IRC2,TEC
M8340108^5051%&	5,050		C,H,K,M,V	B, D	C, G	DAL2,IRC2,TEC
M8340108^5101%&	5,100		C,H,K,M,V	G, J	C, G	DAL2,IRC2,TEC
M8340108^5111%&	5,110		C,H,K,M,V	B, D, F	C, G	DAL2,IRC2,TEC
M8340108^5171%&	5,170	Link at Top	C,H,K,M,V	B, D	C, G	DAL2,IRC2,TEC
M8340108^5231%&	5,230		C,H,K,M,V	B, D, F	C, G	DAL2,IRC2,TEC
M8340108^5301%&	5,300		C,H,K,M,V	B, D	C, G	DAL2,IRC2,TEC
M8340108^5361%&	5,360		C,H,K,M,V	B, D, F	C, G	DAL2,IRC2,TEC
M8340108^5421%&	5,420		C,H,K,M,V	B, D	C, G	DAL2,IRC2,TEC
M8340108^5491%&	5,490	Link at Top	C,H,K,M,V	B, D, F	C, G	DAL2,IRC2,TEC
M8340108^5561%&	5,560		C,H,K,M,V	B, D	C, G	DAL2,IRC2,TEC
M8340108^5601%&	5,600		C,H,K,M,V	G, J	C, G	DAL2,IRC2,TEC
M8340108^5621%&	5,620		C,H,K,M,V	B, D, F	C, G	DAL2,IRC2,TEC
M8340108^5691%&	5,690		C,H,K,M,V	B, D	C, G	DAL2,IRC2,TEC
M8340108^5761%&	5,760	Link at Top	C,H,K,M,V	B, D, F	C, G	DAL2,IRC2,TEC
M8340108^5831%&	5,830		C,H,K,M,V	B, D	C, G	DAL2,IRC2,TEC
M8340108^5901%&	5,900		C,H,K,M,V	B, D, F	C, G	DAL2,IRC2,TEC
M8340108^5971%&	5,970		C,H,K,M,V	B, D	C, G	DAL2,IRC2,TEC
M8340108^6041%&	6,040		C,H,K,M,V	B, D, F	C, G	DAL2,IRC2,TEC
M8340108^6121%&	6,120	Link at Top	C,H,K,M,V	B, D	C, G	DAL2,IRC2,TEC
M8340108^6191%&	6,190		C,H,K,M,V	B, D, F	C, G	DAL2,IRC2,TEC
M8340108^6201%&	6,200		C,H,K,M,V	G, J	C, G	DAL2,IRC2,TEC

M8340108^6261%&	6,260		C,H,K,M,V	B, D	C, G	DAL2,IRC2,TEC
M8340108^6341%&	6,340		C,H,K,M,V	B, D, F	C, G	DAL2,IRC2,TEC
M8340108^6421%&	6,420	Link at Top	C,H,K,M,V	B, D	C, G	DAL2,IRC2,TEC
M8340108^6491%&	6,490		C,H,K,M,V	B, D, F	C, G	DAL2,IRC2,TEC
M8340108^6571%&	6,570		C,H,K,M,V	B, D	C, G	DAL2,IRC2,TEC
M8340108^6651%&	6,650		C,H,K,M,V	B, D, F	C, G	DAL2,IRC2,TEC
M8340108^6731%&	6,730		C,H,K,M,V	B, D	C, G	DAL2,IRC2,TEC
M8340108^6801%&	6,800	Link at Top	C,H,K,M,V	G, J	C, G	DAL2,IRC2,TEC
M8340108^6811%&	6,810		C,H,K,M,V	B, D, F	C, G	DAL2,IRC2,TEC
M8340108^6901%&	6,900		C,H,K,M,V	B, D	C, G	DAL2,IRC2,TEC
M8340108^6981%&	6,980		C,H,K,M,V	B, D, F	C, G	DAL2,IRC2,TEC
M8340108^7061%&	7,060		C,H,K,M,V	B, D	C, G	DAL2,IRC2,TEC
M8340108^7151%&	7,150	Link at Top	C,H,K,M,V	B, D, F	C, G	DAL2,IRC2,TEC
M8340108^7231%&	7,230		C,H,K,M,V	B, D	C, G	DAL2,IRC2,TEC
M8340108^7321%&	7,320		C,H,K,M,V	B, D, F	C, G	DAL2,IRC2,TEC
M8340108^7411%&	7,410		C,H,K,M,V	B, D	C, G	DAL2,IRC2,TEC
M8340108^7501%&	7,500		C,H,K,M,V	B, D, F, G, J	C, G	DAL2,IRC2,TEC
M8340108^7591%&	7,590	Link at Top	C,H,K,M,V	B, D	C, G	DAL2,IRC2,TEC
M8340108^7681%&	7,680		C,H,K,M,V	B, D, F	C, G	DAL2,IRC2,TEC
M8340108^7771%&	7,770		C,H,K,M,V	B, D	C, G	DAL2,IRC2,TEC
M8340108^7871%&	7,870		C,H,K,M,V	B, D, F	C, G	DAL2,IRC2,TEC
M8340108^7961%&	7,960		C,H,K,M,V	B, D	C, G	DAL2,IRC2,TEC
M8340108^8061%&	8,060	Link at Top	C,H,K,M,V	B, D, F	C, G	DAL2,IRC2,TEC
M8340108^8161%&	8,160		C,H,K,M,V	B, D	C, G	DAL2,IRC2,TEC
M8340108^8201%&	8,200		C,H,K,M,V	G, J	C, G	DAL2,IRC2,TEC
M8340108^8251%&	8,250		C,H,K,M,V	B, D, F	C, G	DAL2,IRC2,TEC
M8340108^8351%&	8,350		C,H,K,M,V	B, D	C, G	DAL2,IRC2,TEC
M8340108^8451%&	8,450	Link at Top	C,H,K,M,V	B, D, F	C, G	DAL2,IRC2,TEC
M8340108^8561%&	8,560		C,H,K,M,V	B, D	C, G	DAL2,IRC2,TEC
M8340108^8661%&	8,660		C,H,K,M,V	B, D, F	C, G	DAL2,IRC2,TEC
M8340108^8761%&	8,760		C,H,K,M,V	B, D	C, G	DAL2,IRC2,TEC
M8340108^8871%&	8,870		C,H,K,M,V	B, D, F	C, G	DAL2,IRC2,TEC
M8340108^8981%&	8,980	Link at Top	C,H,K,M,V	B, D	C, G	DAL2,IRC2,TEC
M8340108^9091%&	9,090		C,H,K,M,V	B, D, F	C, G	DAL2,IRC2,TEC
M8340108^9101%&	9,100		C,H,K,M,V	G, J	C, G	DAL2,IRC2,TEC
M8340108^9201%&	9,200		C,H,K,M,V	B, D	C, G	DAL2,IRC2,TEC
M8340108^9311%&	9,310		C,H,K,M,V	B, D, F	C, G	DAL2,IRC2,TEC
M8340108^9421%&	9,420	Link at Top	C,H,K,M,V	B, D	C, G	DAL2,IRC2,TEC
M8340108^9531%&	9,530		C,H,K,M,V	B, D, F	C, G	DAL2,IRC2,TEC
M8340108^9651%&	9,650		C,H,K,M,V	B, D	C, G	DAL2,IRC2,TEC
M8340108^9761%&	9,760		C,H,K,M,V	B, D, F	C, G	DAL2,IRC2,TEC
M8340108^9881%&	9,880		C,H,K,M,V	B, D	C, G	DAL2,IRC2,TEC
M8340108^1002%&	10,000	Link at Top	C,H,K,M,V	B, D, F, G, J	C, G	DAL2,IRC2,TEC
M8340108^1012%&	10,100		C,H,K,M,V	B, D	C, G	DAL2,IRC2,TEC
M8340108^1022%&	10,200		C,H,K,M,V	B, D, F	C, G	DAL2,IRC2,TEC
M8340108^1042%&	10,400		C,H,K,M,V	B, D	C, G	DAL2,IRC2,TEC
M8340108^1052%&	10,500		C,H,K,M,V	B, D, F	C, G	DAL2,IRC2,TEC

M8340108^1062%&	10,600	Link at Top	C,H,K,M,V	B, D	C, G	DAL2,IRC2,TEC
M8340108^1072%&	10,700		C,H,K,M,V	B, D, F	C, G	DAL2,IRC2,TEC
M8340108^1092%&	10,900		C,H,K,M,V	B, D	C, G	DAL2,IRC2,TEC
M8340108^1102%&	11,000		C,H,K,M,V	B, D, F, G, J	C, G	DAL2,IRC2,TEC
M8340108^1112%&	11,100		C,H,K,M,V	B, D	C, G	DAL2,IRC2,TEC
M8340108^1132%&	11,300	Link at Top	C,H,K,M,V	B, D, F	C, G	DAL2,IRC2,TEC
M8340108^1142%&	11,400		C,H,K,M,V	B, D	C, G	DAL2,IRC2,TEC
M8340108^1152%&	11,500		C,H,K,M,V	B, D, F	C, G	DAL2,IRC2,TEC
M8340108^1172%&	11,700		C,H,K,M,V	B, D	C, G	DAL2,IRC2,TEC
M8340108^1182%&	11,800		C,H,K,M,V	B, D, F	C, G	DAL2,IRC2,TEC
M8340108^1202%&	12,000	Link at Top	C,H,K,M,V	B, D, F, G, J	C, G	DAL2,IRC2,TEC
M8340108^1212%&	12,100		C,H,K,M,V	B, D, F	C, G	DAL2,IRC2,TEC
M8340108^1232%&	12,300		C,H,K,M,V	B, D	C, G	DAL2,IRC2,TEC
M8340108^1242%&	12,400		C,H,K,M,V	B, D, F	C, G	DAL2,IRC2,TEC
M8340108^1262%&	12,600		C,H,K,M,V	B, D	C, G	DAL2,IRC2,TEC
M8340108^1272%&	12,700	Link at Top	C,H,K,M,V	B, D, F	C, G	DAL2,IRC2,TEC
M8340108^1292%&	12,900		C,H,K,M,V	B, D	C, G	DAL2,IRC2,TEC
M8340108^1302%&	13,000		C,H,K,M,V	B, D, F, G, J	C, G	DAL2,IRC2,TEC
M8340108^1322%&	13,200		C,H,K,M,V	B, D	C, G	DAL2,IRC2,TEC
M8340108^1332%&	13,300		C,H,K,M,V	B, D, F	C, G	DAL2,IRC2,TEC
M8340108^1352%&	13,500	Link at Top	C,H,K,M,V	B, D	C, G	DAL2,IRC2,TEC
M8340108^1372%&	13,700		C,H,K,M,V	B, D, F	C, G	DAL2,IRC2,TEC
M8340108^1382%&	13,800		C,H,K,M,V	B, D	C, G	DAL2,IRC2,TEC
M8340108^1402%&	14,000		C,H,K,M,V	B, D, F	C, G	DAL2,IRC2,TEC
M8340108^1422%&	14,200		C,H,K,M,V	B, D	C, G	DAL2,IRC2,TEC
M8340108^1432%&	14,300	Link at Top	C,H,K,M,V	B, D, F	C, G	DAL2,IRC2,TEC
M8340108^1452%&	14,500		C,H,K,M,V	B, D	C, G	DAL2,IRC2,TEC
M8340108^1472%&	14,700		C,H,K,M,V	B, D, F	C, G	DAL2,IRC2,TEC
M8340108^1492%&	14,900		C,H,K,M,V	B, D	C, G	DAL2,IRC2,TEC
M8340108^1502%&	15,000		C,H,K,M,V	B, D, F, G, J	C, G	DAL2,IRC2,TEC
M8340108^1522%&	15,200	Link at Top	C,H,K,M,V	B, D	C, G	DAL2,IRC2,TEC
M8340108^1542%&	15,400		C,H,K,M,V	B, D, F	C, G	DAL2,IRC2,TEC
M8340108^1562%&	15,600		C,H,K,M,V	B, D	C, G	DAL2,IRC2,TEC
M8340108^1582%&	15,800		C,H,K,M,V	B, D, F	C, G	DAL2,IRC2,TEC
M8340108^1602%&	16,000		C,H,K,M,V	B, D, G, J	C, G	DAL2,IRC2,TEC
M8340108^1622%&	16,200	Link at Top	C,H,K,M,V	B, D, F	C, G	DAL2,IRC2,TEC
M8340108^1642%&	16,400		C,H,K,M,V	B, D	C, G	DAL2,IRC2,TEC
M8340108^1652%&	16,500		C,H,K,M,V	B, D, F	C, G	DAL2,IRC2,TEC
M8340108^1672%&	16,700		C,H,K,M,V	B, D	C, G	DAL2,IRC2,TEC
M8340108^1692%&	16,900		C,H,K,M,V	B, D, F	C, G	DAL2,IRC2,TEC
M8340108^1722%&	17,200	Link at Top	C,H,K,M,V	B, D	C, G	DAL2,IRC2,TEC
M8340108^1742%&	17,400		C,H,K,M,V	B, D, F	C, G	DAL2,IRC2,TEC
M8340108^1762%&	17,600		C,H,K,M,V	B, D	C, G	DAL2,IRC2,TEC
M8340108^1782%&	17,800		C,H,K,M,V	B, D, F	C, G	DAL2,IRC2,TEC
M8340108^1802%&	18,000		C,H,K,M,V	B, D, G, J	C, G	DAL2,IRC2,TEC
M8340108^1822%&	18,200	Link at Top	C,H,K,M,V	B, D, F	C, G	DAL2,IRC2,TEC
M8340108^1842%&	18,400		C,H,K,M,V	B, D	C, G	DAL2,IRC2,TEC

M8340108^1872%&	18,700		C,H,K,M,V	B, D, F	C, G	DAL2,IRC2,TEC
M8340108^1892%&	18,900		C,H,K,M,V	B, D	C, G	DAL2,IRC2,TEC
M8340108^1912%&	19,100		C,H,K,M,V	B, D, F	C, G	DAL2,IRC2,TEC
M8340108^1932%&	19,300	Link at Top	C,H,K,M,V	B, D	C, G	DAL2,IRC2,TEC
M8340108^1962%&	19,600		C,H,K,M,V	B, D, F	C, G	DAL2,IRC2,TEC
M8340108^1982%&	19,800		C,H,K,M,V	B, D	C, G	DAL2,IRC2,TEC
M8340108^2002%&	20,000		C,H,K,M,V	B, D, F, G, J	C, G	DAL2,IRC2,TEC
M8340108^2032%&	20,300		C,H,K,M,V	B, D	C, G	DAL2,IRC2,TEC
M8340108^2052%&	20,500	Link at Top	C,H,K,M,V	B, D, F	C, G	DAL2,IRC2,TEC
M8340108^2082%&	20,800		C,H,K,M,V	B, D	C, G	DAL2,IRC2,TEC
M8340108^2102%&	21,000		C,H,K,M,V	B, D, F	C, G	DAL2,IRC2,TEC
M8340108^2132%&	21,300		C,H,K,M,V	B, D	C, G	DAL2,IRC2,TEC
M8340108^2152%&	21,500		C,H,K,M,V	B, D, F	C, G	DAL2,IRC2,TEC
M8340108^2182%&	21,800	Link at Top	C,H,K,M,V	B, D	C, G	DAL2,IRC2,TEC
M8340108^2202%&	22,000		C,H,K,M,V	G, J	C, G	DAL2,IRC2,TEC
M8340108^2212%&	22,100		C,H,K,M,V	B, D, F	C, G	DAL2,IRC2,TEC
M8340108^2232%&	22,300		C,H,K,M,V	B, D	C, G	DAL2,IRC2,TEC
M8340108^2262%&	22,600		C,H,K,M,V	B, D, F	C, G	DAL2,IRC2,TEC
M8340108^2292%&	22,900	Link at Top	C,H,K,M,V	B, D	C, G	DAL2,IRC2,TEC
M8340108^2322%&	23,200		C,H,K,M,V	B, D, F	C, G	DAL2,IRC2,TEC
M8340108^2342%&	23,400		C,H,K,M,V	B, D	C, G	DAL2,IRC2,TEC
M8340108^2372%&	23,700		C,H,K,M,V	B, D, F	C, G	DAL2,IRC2,TEC
M8340108^2402%&	24,000		C,H,K,M,V	B, D, F, G, J	C, G	DAL2,IRC2,TEC
M8340108^2432%&	24,300	Link at Top	C,H,K,M,V	B, D, F	C, G	DAL2,IRC2,TEC
M8340108^2462%&	24,600		C,H,K,M,V	B, D	C, G	DAL2,IRC2,TEC
M8340108^2492%&	24,900		C,H,K,M,V	B, D, F	C, G	DAL2,IRC2,TEC
M8340108^2522%&	25,200		C,H,K,M,V	B, D	C, G	DAL2,IRC2,TEC
M8340108^2552%&	25,500		C,H,K,M,V	B, D, F	C, G	DAL2,IRC2,TEC
M8340108^2582%&	25,800	Link at Top	C,H,K,M,V	B, D	C, G	DAL2,IRC2,TEC
M8340108^2612%&	26,100		C,H,K,M,V	B, D, F	C, G	DAL2,IRC2,TEC
M8340108^2642%&	26,400		C,H,K,M,V	B, D	C, G	DAL2,IRC2,TEC
M8340108^2672%&	26,700		C,H,K,M,V	B, D, F	C, G	DAL2,IRC2,TEC
M8340108^2702%&	27,000		C,H,K,M,V	G, J	C, G	DAL2,IRC2,TEC
M8340108^2712%&	27,100	Link at Top	C,H,K,M,V	B, D	C, G	DAL2,IRC2,TEC
M8340108^2742%&	27,400		C,H,K,M,V	B, D, F	C, G	DAL2,IRC2,TEC
M8340108^2772%&	27,700		C,H,K,M,V	B, D	C, G	DAL2,IRC2,TEC
M8340108^2802%&	28,000		C,H,K,M,V	B, D, F	C, G	DAL2,IRC2,TEC
M8340108^2842%&	28,400		C,H,K,M,V	B, D	C, G	DAL2,IRC2,TEC
M8340108^2872%&	28,700	Link at Top	C,H,K,M,V	B, D, F	C, G	DAL2,IRC2,TEC
M8340108^2912%&	29,100		C,H,K,M,V	B, D	C, G	DAL2,IRC2,TEC
M8340108^2942%&	29,400		C,H,K,M,V	B, D, F	C, G	DAL2,IRC2,TEC
M8340108^2982%&	29,800		C,H,K,M,V	B, D	C, G	DAL2,IRC2,TEC
M8340108^3002%&	30,000		C,H,K,M,V	G, J	C, G	DAL2,IRC2,TEC
M8340108^3012%&	30,100	Link at Top	C,H,K,M,V	B, D, F	C, G	DAL2,IRC2,TEC
M8340108^3052%&	30,500		C,H,K,M,V	B, D	C, G	DAL2,IRC2,TEC
M8340108^3092%&	30,900		C,H,K,M,V	B, D, F	C, G	DAL2,IRC2,TEC
M8340108^3122%&	31,200		C,H,K,M,V	B, D	C, G	DAL2,IRC2,TEC

M8340108^3162%&	31,600		C,H,K,M,V	B, D, F	C, G	DAL2,IRC2,TEC
M8340108^3202%&	32,000	Link at Top	C,H,K,M,V	B, D	C, G	DAL2,IRC2,TEC
M8340108^3242%&	32,400		C,H,K,M,V	B, D, F	C, G	DAL2,IRC2,TEC
M8340108^3282%&	32,800		C,H,K,M,V	B, D	C, G	DAL2,IRC2,TEC
M8340108^3302%&	33,000		C,H,K,M,V	G, J	C, G	DAL2,IRC2,TEC
M8340108^3322%&	33,200		C,H,K,M,V	B, D, F	C, G	DAL2,IRC2,TEC
M8340108^3362%&	33,600	Link at Top	C,H,K,M,V	B, D	C, G	DAL2,IRC2,TEC
M8340108^3402%&	34,000		C,H,K,M,V	B, D, F	C, G	DAL2,IRC2,TEC
M8340108^3442%&	34,400		C,H,K,M,V	B, D	C, G	DAL2,IRC2,TEC
M8340108^3482%&	34,800		C,H,K,M,V	B, D, F	C, G	DAL2,IRC2,TEC
M8340108^3522%&	35,200		C,H,K,M,V	B, D	C, G	DAL2,IRC2,TEC
M8340108^3572%&	35,700	Link at Top	C,H,K,M,V	B, D, F	C, G	DAL2,IRC2,TEC
M8340108^3602%&	36,000		C,H,K,M,V	G, J	C, G	DAL2,IRC2,TEC
M8340108^3612%&	36,100		C,H,K,M,V	B, D	C, G	DAL2,IRC2,TEC
M8340108^3652%&	36,500		C,H,K,M,V	B, D, F	C, G	DAL2,IRC2,TEC
M8340108^3702%&	37,000		C,H,K,M,V	B, D	C, G	DAL2,IRC2,TEC
M8340108^3742%&	37,400	Link at Top	C,H,K,M,V	B, D, F	C, G	DAL2,IRC2,TEC
M8340108^3792%&	37,900		C,H,K,M,V	B, D	C, G	DAL2,IRC2,TEC
M8340108^3832%&	38,300		C,H,K,M,V	B, D, F	C, G	DAL2,IRC2,TEC
M8340108^3882%&	38,800		C,H,K,M,V	B, D	C, G	DAL2,IRC2,TEC
M8340108^3902%&	39,000		C,H,K,M,V	G, J	C, G	DAL2,IRC2,TEC
M8340108^3922%&	39,200	Link at Top	C,H,K,M,V	B, D, F	C, G	DAL2,IRC2,TEC
M8340108^3972%&	39,700		C,H,K,M,V	B, D	C, G	DAL2,IRC2,TEC
M8340108^4022%&	40,200		C,H,K,M,V	B, D, F	C, G	DAL2,IRC2,TEC
M8340108^4072%&	40,700		C,H,K,M,V	B, D	C, G	DAL2,IRC2,TEC
M8340108^4122%&	41,200		C,H,K,M,V	B, D, F	C, G	DAL2,IRC2,TEC
M8340108^4172%&	41,700	Link at Top	C,H,K,M,V	B, D	C, G	DAL2,IRC2,TEC
M8340108^4222%&	42,200		C,H,K,M,V	B, D, F	C, G	DAL2,IRC2,TEC
M8340108^4272%&	42,700		C,H,K,M,V	B, D	C, G	DAL2,IRC2,TEC
M8340108^4302%&	43,000		C,H,K,M,V	G, J	C, G	DAL2,IRC2,TEC
M8340108^4322%&	43,200		C,H,K,M,V	B, D, F	C, G	DAL2,IRC2,TEC
M8340108^4372%&	43,700	Link at Top	C,H,K,M,V	B, D	C, G	DAL2,IRC2,TEC
M8340108^4422%&	44,200		C,H,K,M,V	B, D, F	C, G	DAL2,IRC2,TEC
M8340108^4482%&	44,800		C,H,K,M,V	B, D	C, G	DAL2,IRC2,TEC
M8340108^4532%&	45,300		C,H,K,M,V	B, D, F	C, G	DAL2,IRC2,TEC
M8340108^4592%&	45,900		C,H,K,M,V	B, D	C, G	DAL2,IRC2,TEC
M8340108^4642%&	46,400	Link at Top	C,H,K,M,V	B, D, F	C, G	DAL2,IRC2,TEC
M8340108^4702%&	47,000		C,H,K,M,V	B, D, G, J	C, G	DAL2,IRC2,TEC
M8340108^4752%&	47,500		C,H,K,M,V	B, D, F	C, G	DAL2,IRC2,TEC
M8340108^4812%&	48,100		C,H,K,M,V	B, D	C, G	DAL2,IRC2,TEC
M8340108^4872%&	48,700		C,H,K,M,V	B, D, F	C, G	DAL2,IRC2,TEC
M8340108^4932%&	49,300	Link at Top	C,H,K,M,V	B, D	C, G	DAL2,IRC2,TEC
M8340108^4992%&	49,900		C,H,K,M,V	B, D, F	C, G	DAL2,IRC2,TEC
M8340108^5052%&	50,500		C,H,K,M,V	B, D	C, G	DAL2,IRC2,TEC
M8340108^5102%&	51,000		C,H,K,M,V	G, J	C, G	DAL2,IRC2,TEC
M8340108^5112%&	51,100		C,H,K,M,V	B, D, F	C, G	DAL2,IRC2,TEC
M8340108^5172%&	51,700	Link at Top	C,H,K,M,V	B, D	C, G	DAL2,IRC2,TEC

M8340108^5232%&	52,300		C,H,K,M,V	B, D, F	C, G	DAL2,IRC2,TEC
M8340108^5302%&	53,000		C,H,K,M,V	B, D	C, G	DAL2,IRC2,TEC
M8340108^5362%&	53,600		C,H,K,M,V	B, D, F	C, G	DAL2,IRC2,TEC
M8340108^5422%&	54,200		C,H,K,M,V	B, D	C, G	DAL2,IRC2,TEC
M8340108^5492%&	54,900	Link at Top	C,H,K,M,V	B, D, F	C, G	DAL2,IRC2,TEC
M8340108^5562%&	55,600		C,H,K,M,V	B, D	C, G	DAL2,IRC2,TEC
M8340108^5602%&	56,000		C,H,K,M,V	G, J	C, G	DAL2,IRC2,TEC
M8340108^5622%&	56,200		C,H,K,M,V	B, D, F	C, G	DAL2,IRC2,TEC
M8340108^5692%&	56,900		C,H,K,M,V	B, D	C, G	DAL2,IRC2,TEC
M8340108^5762%&	57,600	Link at Top	C,H,K,M,V	B, D, F	C, G	DAL2,IRC2,TEC
M8340108^5832%&	58,300		C,H,K,M,V	B, D	C, G	DAL2,IRC2,TEC
M8340108^5902%&	59,000		C,H,K,M,V	B, D, F	C, G	DAL2,IRC2,TEC
M8340108^5972%&	59,700		C,H,K,M,V	B, D	C, G	DAL2,IRC2,TEC
M8340108^6042%&	60,400		C,H,K,M,V	B, D, F	C, G	DAL2,IRC2,TEC
M8340108^6122%&	61,200	Link at Top	C,H,K,M,V	B, D	C, G	DAL2,IRC2,TEC
M8340108^6192%&	61,900		C,H,K,M,V	B, D, F	C, G	DAL2,IRC2,TEC
M8340108^6202%&	62,000		C,H,K,M,V	G, J	C, G	DAL2,IRC2,TEC
M8340108^6262%&	62,600		C,H,K,M,V	B, D	C, G	DAL2,IRC2,TEC
M8340108^6342%&	63,400		C,H,K,M,V	B, D, F	C, G	DAL2,IRC2,TEC
M8340108^6422%&	64,200	Link at Top	C,H,K,M,V	B, D	C, G	DAL2,IRC2,TEC
M8340108^6492%&	64,900		C,H,K,M,V	B, D, F	C, G	DAL2,IRC2,TEC
M8340108^6572%&	65,700		C,H,K,M,V	B, D	C, G	DAL2,IRC2,TEC
M8340108^6652%&	66,500		C,H,K,M,V	B, D, F	C, G	DAL2,IRC2,TEC
M8340108^6732%&	67,300		C,H,K,M,V	B, D	C, G	DAL2,IRC2,TEC
M8340108^6802%&	68,000	Link at Top	C,H,K,M,V	G, J	C, G	DAL2,IRC2,TEC
M8340108^6812%&	68,100		C,H,K,M,V	B, D, F	C, G	DAL2,IRC2,TEC
M8340108^6902%&	69,000		C,H,K,M,V	B, D	C, G	DAL2,IRC2,TEC
M8340108^6982%&	69,800		C,H,K,M,V	B, D, F	C, G	DAL2,IRC2,TEC
M8340108^7062%&	70,600		C,H,K,M,V	B, D	C, G	DAL2,IRC2,TEC
M8340108^7152%&	71,500	Link at Top	C,H,K,M,V	B, D, F	C, G	DAL2,IRC2,TEC
M8340108^7232%&	72,300		C,H,K,M,V	B, D	C, G	DAL2,IRC2,TEC
M8340108^7322%&	73,200		C,H,K,M,V	B, D, F	C, G	DAL2,IRC2,TEC
M8340108^7412%&	74,100		C,H,K,M,V	B, D	C, G	DAL2,IRC2,TEC
M8340108^7502%&	75,000		C,H,K,M,V	B, D, F, G, J	C, G	DAL2,IRC2,TEC
M8340108^7592%&	75,900	Link at Top	C,H,K,M,V	B, D	C, G	DAL2,IRC2,TEC
M8340108^7682%&	76,800		C,H,K,M,V	B, D, F	C, G	DAL2,IRC2,TEC
M8340108^7772%&	77,700		C,H,K,M,V	B, D	C, G	DAL2,IRC2,TEC
M8340108^7872%&	78,700		C,H,K,M,V	B, D, F	C, G	DAL2,IRC2,TEC
M8340108^7962%&	79,600		C,H,K,M,V	B, D	C, G	DAL2,IRC2,TEC
M8340108^8062%&	80,600	Link at Top	C,H,K,M,V	B, D, F	C, G	DAL2,IRC2,TEC
M8340108^8162%&	81,600		C,H,K,M,V	B, D	C, G	DAL2,IRC2,TEC
M8340108^8202%&	82,000		C,H,K,M,V	G, J	C, G	DAL2,IRC2,TEC
M8340108^8252%&	82,500		C,H,K,M,V	B, D, F	C, G	DAL2,IRC2,TEC
M8340108^8352%&	83,500		C,H,K,M,V	B, D	C, G	DAL2,IRC2,TEC
M8340108^8452%&	84,500	Link at Top	C,H,K,M,V	B, D, F	C, G	DAL2,IRC2,TEC
M8340108^8562%&	85,600		C,H,K,M,V	B, D	C, G	DAL2,IRC2,TEC
M8340108^8662%&	86,600		C,H,K,M,V	B, D, F	C, G	DAL2,IRC2,TEC

M8340108^8762%&	87,600		C,H,K,M,V	B, D	C, G	DAL2,IRC2,TEC
M8340108^8872%&	88,700		C,H,K,M,V	B, D, F	C, G	DAL2,IRC2,TEC
M8340108^8982%&	89,800	Link at Top	C,H,K,M,V	B, D	C, G	DAL2,IRC2,TEC
M8340108^9092%&	90,900		C,H,K,M,V	B, D, F	C, G	DAL2,IRC2,TEC
M8340108^9102%&	91,000		C,H,K,M,V	G, J	C, G	DAL2,IRC2,TEC
M8340108^9202%&	92,000		C,H,K,M,V	B, D	C, G	DAL2,IRC2,TEC
M8340108^9312%&	93,100		C,H,K,M,V	B, D, F	C, G	DAL2,IRC2,TEC
M8340108^9422%&	94,200	Link at Top	C,H,K,M,V	B, D	C, G	DAL2,IRC2,TEC
M8340108^9532%&	95,300		C,H,K,M,V	B, D, F	C, G	DAL2,IRC2,TEC
M8340108^9652%&	96,500		C,H,K,M,V	B, D	C, G	DAL2,IRC2,TEC
M8340108^9762%&	97,600		C,H,K,M,V	B, D, F	C, G	DAL2,IRC2,TEC
M8340108^9882%&	98,800		C,H,K,M,V	B, D	C, G	DAL2,IRC2,TEC
M8340108^1003%&	100,000	Link at Top	C,H,K,M,V	B, D, F, G, J	C, G	DAL2,IRC2,TEC
M8340108^1023%&	102,000		C,H,K,M,V	F	C, G	DAL2
M8340108^1053%&	105,000		C,H,K,M,V	F	C, G	DAL2
M8340108^1073%&	107,000		C,H,K,M,V	F	C, G	DAL2
M8340108^1103%&	110,000		C,H,K,M,V	F, G, J	C, G	DAL2
M8340108^1133%&	113,000	Link at Top	C,H,K,M,V	F	C, G	DAL2
M8340108^1153%&	115,000		C,H,K,M,V	F	C, G	DAL2
M8340108^1183%&	118,000		C,H,K,M,V	F	C, G	DAL2
M8340108^1203%&	120,000	Link at Top	C,H,K,M,V	F, G, J	C, G	DAL2
M8340108^1213%&	121,000		C,H,K,M,V	F	C, G	DAL2
M8340108^1243%&	124,000		C,H,K,M,V	F	C, G	DAL2
M8340108^1273%&	127,000	Link at Top	C,H,K,M,V	F	C, G	DAL2
M8340108^1303%&	130,000		C,H,K,M,V	F, G, J	C, G	DAL2
M8340108^1333%&	133,000		C,H,K,M,V	F	C, G	DAL2
M8340108^1373%&	137,000		C,H,K,M,V	F	C, G	DAL2
M8340108^1403%&	140,000		C,H,K,M,V	F	C, G	DAL2
M8340108^1433%&	143,000	Link at Top	C,H,K,M,V	F	C, G	DAL2
M8340108^1473%&	147,000		C,H,K,M,V	F	C, G	DAL2
M8340108^1503%&	150,000		C,H,K,M,V	F, G, J	C, G	DAL2
M8340108^1543%&	154,000		C,H,K,M,V	F	C, G	DAL2
M8340108^1583%&	158,000		C,H,K,M,V	F	C, G	DAL2
M8340108^1603%&	160,000		C,H,K,M,V	G, J	C, G	DAL2
M8340108^1623%&	162,000	Link at Top	C,H,K,M,V	F	C, G	DAL2
M8340108^1653%&	165,000		C,H,K,M,V	F	C, G	DAL2
M8340108^1693%&	169,000		C,H,K,M,V	F	C, G	DAL2
M8340108^1743%&	174,000		C,H,K,M,V	F	C, G	DAL2
M8340108^1783%&	178,000		C,H,K,M,V	F	C, G	DAL2
M8340108^1803%&	180,000		C,H,K,M,V	G, J	C, G	DAL2
M8340108^1823%&	182,000	Link at Top	C,H,K,M,V	F	C, G	DAL2
M8340108^1873%&	187,000		C,H,K,M,V	F	C, G	DAL2
M8340108^1913%&	191,000		C,H,K,M,V	F	C, G	DAL2
M8340108^1963%&	196,000		C,H,K,M,V	F	C, G	DAL2
M8340108^2003%&	200,000		C,H,K,M,V	F, G, J	C, G	DAL2
M8340108^2053%&	205,000	Link at Top	C,H,K,M,V	F	C, G	DAL2
M8340108^2103%&	210,000		C,H,K,M,V	F	C, G	DAL2

M8340108^2153%&	215,000		C,H,K,M,V	F	C, G	DAL2
M8340108^2183%&	218,000	Link at Top	C,H,K,M,V		C, G	DAL2
M8340108^2203%&	220,000		C,H,K,M,V	G, J	C, G	DAL2
M8340108^2213%&	221,000		C,H,K,M,V	F	C, G	DAL2
M8340108^2263%&	226,000		C,H,K,M,V	F	C, G	DAL2
M8340108^2323%&	232,000		C,H,K,M,V	F	C, G	DAL2
M8340108^2373%&	237,000		C,H,K,M,V	F	C, G	DAL2
M8340108^2403%&	240,000		C,H,K,M,V	F, G, J	C, G	DAL2
M8340108^2433%&	243,000	Link at Top	C,H,K,M,V	F	C, G	DAL2
M8340108^2493%&	249,000		C,H,K,M,V	F	C, G	DAL2
M8340108^2553%&	255,000		C,H,K,M,V	F	C, G	DAL2
M8340108^2613%&	261,000		C,H,K,M,V	F	C, G	DAL2
M8340108^2673%&	267,000		C,H,K,M,V	F	C, G	DAL2
M8340108^2703%&	270,000		C,H,K,M,V	G, J	C, G	DAL2
M8340108^2743%&	274,000		C,H,K,M,V	F	C, G	DAL2
M8340108^2803%&	280,000		C,H,K,M,V	F	C, G	DAL2
M8340108^2873%&	287,000	Link at Top	C,H,K,M,V	F	C, G	DAL2
M8340108^2943%&	294,000		C,H,K,M,V	F	C, G	DAL2
M8340108^3003%&	300,000		C,H,K,M,V	G, J	C, G	DAL2
M8340108^3013%&	301,000	Link at Top	C,H,K,M,V	F	C, G	DAL2
M8340108^3093%&	309,000		C,H,K,M,V	F	C, G	DAL2
M8340108^3163%&	316,000		C,H,K,M,V	F	C, G	DAL2
M8340108^3243%&	324,000		C,H,K,M,V	F	C, G	DAL2
M8340108^3303%&	330,000		C,H,K,M,V	G, J	C, G	DAL2
M8340108^3323%&	332,000		C,H,K,M,V	F	C, G	DAL2
M8340108^3403%&	340,000		C,H,K,M,V	F	C, G	DAL2
M8340108^3483%&	348,000		C,H,K,M,V	F	C, G	DAL2
M8340108^3573%&	357,000	Link at Top	C,H,K,M,V	F	C, G	DAL2
M8340108^3603%&	360,000		C,H,K,M,V	G, J	C, G	DAL2
M8340108^3653%&	365,000		C,H,K,M,V	F	C, G	DAL2
M8340108^3743%&	374,000	Link at Top	C,H,K,M,V	F	C, G	DAL2
M8340108^3833%&	383,000		C,H,K,M,V	F	C, G	DAL2
M8340108^3903%&	390,000		C,H,K,M,V	G, J	C, G	DAL2
M8340108^3923%&	392,000	Link at Top	C,H,K,M,V	F	C, G	DAL2
M8340108^4023%&	402,000		C,H,K,M,V	F	C, G	DAL2
M8340108^4123%&	412,000		C,H,K,M,V	F	C, G	DAL2
M8340108^4223%&	422,000		C,H,K,M,V	F	C, G	DAL2
M8340108^4303%&	430,000		C,H,K,M,V	G, J	C, G	DAL2
M8340108^4323%&	432,000		C,H,K,M,V	F	C, G	DAL2
M8340108^4423%&	442,000		C,H,K,M,V	F	C, G	DAL2
M8340108^4533%&	453,000		C,H,K,M,V	F	C, G	DAL2
M8340108^4643%&	464,000	Link at Top	C,H,K,M,V	F	C, G	DAL2
M8340108^4703%&	470,000		C,H,K,M,V	G, J	C, G	DAL2
M8340108^4753%&	475,000		C,H,K,M,V	F	C, G	DAL2
M8340108^4873%&	487,000		C,H,K,M,V	F	C, G	DAL2
M8340108^4993%&	499,000		C,H,K,M,V	F	C, G	DAL2
M8340108^5103%&	510,000		C,H,K,M,V	G, J	C, G	DAL2

M8340108^5113%&	511,000		C,H,K,M,V	F	C, G	DAL2
M8340108^5233%&	523,000		C,H,K,M,V	F	C, G	DAL2
M8340108^5363%&	536,000		C,H,K,M,V	F	C, G	DAL2
M8340108^5493%&	549,000	Link at Top	C,H,K,M,V	F	C, G	DAL2
M8340108^5603%&	560,000		C,H,K,M,V	G, J	C, G	DAL2
M8340108^5623%&	562,000		C,H,K,M,V	F	C, G	DAL2
M8340108^5763%&	576,000	Link at Top	C,H,K,M,V	F	C, G	DAL2
M8340108^5903%&	590,000		C,H,K,M,V	F	C, G	DAL2
M8340108^6043%&	604,000		C,H,K,M,V	F	C, G	DAL2
M8340108^6193%&	619,000		C,H,K,M,V	F	C, G	DAL2
M8340108^6203%&	620,000		C,H,K,M,V	G, J	C, G	DAL2
M8340108^6343%&	634,000		C,H,K,M,V	F	C, G	DAL2
M8340108^6493%&	649,000		C,H,K,M,V	F	C, G	DAL2
M8340108^6653%&	665,000		C,H,K,M,V	F	C, G	DAL2
M8340108^6803%&	680,000	Link at Top	C,H,K,M,V	G, J	C, G	DAL2
M8340108^6813%&	681,000		C,H,K,M,V	F	C, G	DAL2
M8340108^6983%&	698,000		C,H,K,M,V	F	C, G	DAL2
M8340108^7153%&	715,000	Link at Top	C,H,K,M,V	F	C, G	DAL2
M8340108^7323%&	732,000		C,H,K,M,V	F	C, G	DAL2
M8340108^7503%&	750,000		C,H,K,M,V	F, G, J	C, G	DAL2
M8340108^7683%&	768,000		C,H,K,M,V	F	C, G	DAL2
M8340108^7873%&	787,000		C,H,K,M,V	F	C, G	DAL2
M8340108^8063%&	806,000	Link at Top	C,H,K,M,V	F	C, G	DAL2
M8340108^8203%&	820,000		C,H,K,M,V	G, J	C, G	DAL2
M8340108^8253%&	825,000		C,H,K,M,V	F	C, G	DAL2
M8340108^8453%&	845,000	Link at Top	C,H,K,M,V	F	C, G	DAL2
M8340108^8663%&	866,000		C,H,K,M,V	F	C, G	DAL2
M8340108^8873%&	887,000		C,H,K,M,V	F	C, G	DAL2
M8340108^9093%&	909,000		C,H,K,M,V	F	C, G	DAL2
M8340108^9103%&	910,000		C,H,K,M,V	G, J	C, G	DAL2
M8340108^9313%&	931,000		C,H,K,M,V	F	C, G	DAL2
M8340108^9533%&	953,000		C,H,K,M,V	F	C, G	DAL2
M8340108^9763%&	976,000		C,H,K,M,V	F	C, G	DAL2
M8340108^1004%&	1,000,000	Link at Top	C,H,K,M,V	F, G, J	C, G	DAL2

RZ080 RESISTORS

DECADE BREAKDOWN

Click on the link below to see the associated parts selection listing:

Resistance Range
10.0 Ohms through 97.6 Ohms
100 Ohms through 988 Ohms
1,000 Ohms through 9,880 Ohms
10,000 Ohms through 98,800 Ohms
100,000 Ohms through 1,000,000 Ohms

Schematic	Characteristic	Element Power Rating (W)	Network Power Rating (W)
C	C	0.06	0.42
C	H	0.12	0.84
C	K	0.12	0.84
C	M	0.12	0.84
C	V	0.06	0.42
G	C	0.06	0.24
G	H	0.12	0.48
G	K	0.12	0.48
G	M	0.12	0.48
G	V	0.06	0.24

Style RZ080

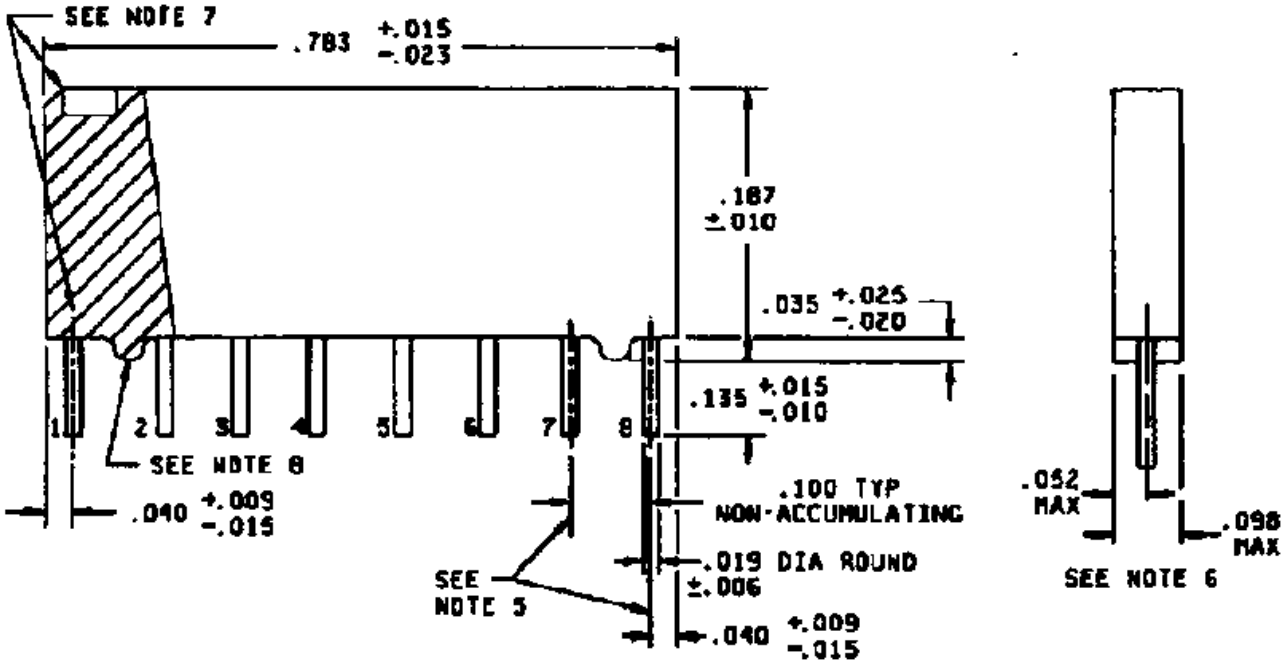

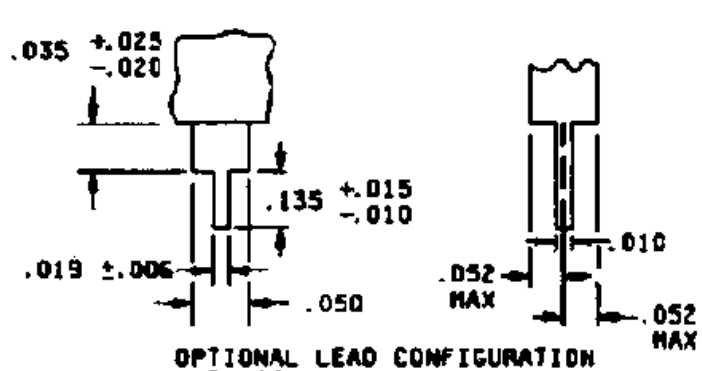

OPTIONAL LEAD CONFIGURATION
WITH STANDOFF AS PART OF LEAD
(SEE NOTE 8)

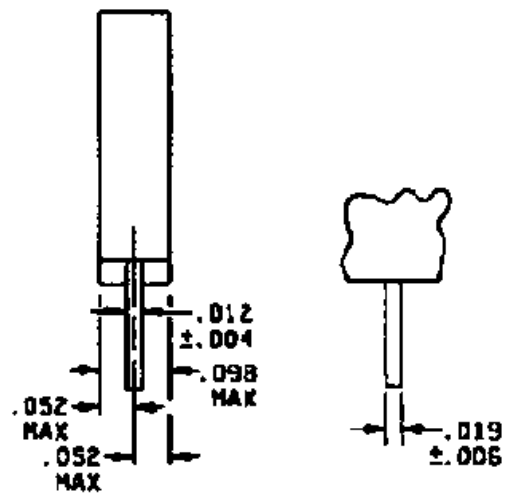

OPTIONAL LEAD CONFIGURATION
WITH STANDOFF AS PART OF BODY
(SEE NOTE 8)

Notes:

1) Dimensions are inches.

2) Metric equivalents are given for general information only.

3) Unless otherwise specified, tolerances are +/- 0.005 (0.13 mm).

4) The picturization of the styles above is given as representative of the envelope item. Slight deviations from the outline shown, which are contained within the envelope and do not alter the functional aspects of the device, are acceptable.

5) Terminal centerline to centerline measurements made at point of emergence of the lead from the body.

6) Measurement made at the point of emergence of the lead of the body.

7) Pin 1 locator shall be a dot, notch, or numeral 1 adjacent to pin no. 1, in the shaded area; aslo, additional marking may be placed on top edge where the bevel may be located.

8) If the standofs are located on the body, aminimum of two standoffs are required as illustrated. As an option, additional standoffs may be located on the body of the resistor network. If leads with standoffs are used, standoffs on the body are not required.

MIL-PRF-83401/8 (RZ080) Film Resistor Networks: 10.0 Ohms Through 97.6 Ohms

	Resistance	Power	Char.	Res.		
Part Number	Value (Ohms)	Rating	(^)	Tolerance	Schematic	Manufacturer
M8340108^10R0%&	10.0	See PN Ordering Section	C,H,K,M,V	F, G, J	C, G	DAL2
M8340108^10R2%&	10.2		C,H,K,M,V	F	C, G	DAL2
M8340108^10R5%&	10.5		C,H,K,M,V	F	C, G	DAL2
M8340108^10R7%&	10.7		C,H,K,M,V	F	C, G	DAL2
M8340108^11R0%&	11.0		C,H,K,M,V	F, G, J	C, G	DAL2
M8340108^11R3%&	11.3	See PN Ordering Section	C,H,K,M,V	F	C, G	DAL2
M8340108^11R5%&	11.5		C,H,K,M,V	F	C, G	DAL2
M8340108^11R8%&	11.8		C,H,K,M,V	F	C, G	DAL2
M8340108^12R0%&	12.0		C,H,K,M,V	F, G, J	C, G	DAL2
M8340108^12R1%&	12.1		C,H,K,M,V	F	C, G	DAL2
M8340108^12R4%&	12.4	See PN Ordering Section	C,H,K,M,V	F	C, G	DAL2
M8340108^12R7%&	12.7		C,H,K,M,V	F	C, G	DAL2
M8340108^13R0%&	13.0		C,H,K,M,V	F, G, J	C, G	DAL2
M8340108^13R3%&	13.3		C,H,K,M,V	F	C, G	DAL2
	Resistance	Power	Char.	Res.		
Part Number	Value (Ohms)	Rating	(^)	Tolerance	Schematic	Manufacturer
M8340108^13R7%&	13.7		C,H,K,M,V	F	C, G	DAL2
M8340108^14R0%&	14.0	See PN Ordering Section	C,H,K,M,V	F	C, G	DAL2
M8340108^14R3%&	14.3		C,H,K,M,V	F	C, G	DAL2
M8340108^14R7%&	14.7		C,H,K,M,V	F	C, G	DAL2
M8340108^15R0%&	15.0		C,H,K,M,V	F, G, J	C, G	DAL2
M8340108^15R4%&	15.4		C,H,K,M,V	F	C, G	DAL2
M8340108^15R8%&	15.8	See PN Ordering Section	C,H,K,M,V	F	C, G	DAL2

M8340108^16R0%&	16.0		C,H,K,M,V	G, J	C, G	DAL2
M8340108^16R2%&	16.2		C,H,K,M,V	F	C, G	DAL2
M8340108^16R5%&	16.5		C,H,K,M,V	F	C, G	DAL2
M8340108^16R9%&	16.9		C,H,K,M,V	F	C, G	DAL2
M8340108^17R4%&	17.4	See PN Ordering Section	C,H,K,M,V	F	C, G	DAL2
M8340108^17R8%&	17.8		C,H,K,M,V	F	C, G	DAL2
M8340108^18R0%&	18.0		C,H,K,M,V	G, J	C, G	DAL2
	Resistance	Power	Char.	Res.		
Part Number	Value (Ohms)	Rating	(^)	Tolerance	Schematic	Manufacturer
M8340108^18R2%&	18.2		C,H,K,M,V	F	C, G	DAL2
M8340108^18R7%&	18.7		C,H,K,M,V	F	C, G	DAL2
M8340108^19R1%&	19.1	See PN Ordering Section	C,H,K,M,V	F	C, G	DAL2
M8340108^19R6%&	19.6		C,H,K,M,V	F	C, G	DAL2
M8340108^20R0%&	20.0		C,H,K,M,V	F, G, J	C, G	DAL2
M8340108^20R5%&	20.5		C,H,K,M,V	F	C, G	DAL2
M8340108^21R0%&	21.0		C,H,K,M,V	F	C, G	DAL2
M8340108^21R5%&	21.5	See PN Ordering Section	C,H,K,M,V	F	C, G	DAL2
M8340108^22R0%&	22.0		C,H,K,M,V	G, J	C, G	DAL2
M8340108^22R1%&	22.1		C,H,K,M,V	F	C, G	DAL2
M8340108^22R6%&	22.6		C,H,K,M,V	F	C, G	DAL2
M8340108^23R2%&	23.2		C,H,K,M,V	F	C, G	DAL2
M8340108^23R7%&	23.7	See PN Ordering Section	C,H,K,M,V	F	C, G	DAL2
M8340108^24R0%&	24.0		C,H,K,M,V	F, G, J	C, G	DAL2
	Resistance	Power	Char.	Res.		
Part Number	Value (Ohms)	Rating	(^)	Tolerance	Schematic	Manufacturer
M8340108^24R3%&	24.3		C,H,K,M,V	F	C, G	DAL2
M8340108^24R9%&	24.9		C,H,K,M,V	F	C, G	DAL2
M8340108^25R5%&	25.5		C,H,K,M,V	F	C, G	DAL2
M8340108^26R1%&	26.1	See PN Ordering Section	C,H,K,M,V	F	C, G	DAL2
M8340108^26R7%&	26.7		C,H,K,M,V	F	C, G	DAL2
M8340108^27R0%&	27.0		C,H,K,M,V	G, J	C, G	DAL2,TEC
M8340108^27R4%&	27.4		C,H,K,M,V	F	C, G	DAL2,TEC
M8340108^28R0%&	28.0		C,H,K,M,V	F	C, G	DAL2,TEC
M8340108^28R7%&	28.7	See PN Ordering Section	C,H,K,M,V	F	C, G	DAL2,TEC
M8340108^29R4%&	29.4		C,H,K,M,V	F	C, G	DAL2,TEC
M8340108^30R0%&	30.0		C,H,K,M,V	G, J	C, G	DAL2,TEC
M8340108^30R1%&	30.1		C,H,K,M,V	F	C, G	DAL2,TEC
M8340108^30R9%&	30.9		C,H,K,M,V	F	C, G	DAL2,TEC
M8340108^31R6%&	31.6	See PN Ordering Section	C,H,K,M,V	F	C, G	DAL2,TEC
	Resistance	Power	Char.	Res.		
Part Number	Value (Ohms)	Rating	(^)	Tolerance	Schematic	Manufacturer
M8340108^32R4%&	32.4		C,H,K,M,V	F	C, G	DAL2,TEC
M8340108^33R0%&	33.0		C,H,K,M,V	G, J	C, G	DAL2,TEC
M8340108^33R2%&	33.2		C,H,K,M,V	F	C, G	DAL2,TEC
M8340108^34R0%&	34.0		C,H,K,M,V	F	C, G	DAL2,TEC
M8340108^34R8%&	34.8	See PN Ordering Section	C,H,K,M,V	F	C, G	DAL2,TEC
M8340108^35R7%&	35.7		C,H,K,M,V	F	C, G	DAL2,TEC

M8340108^36R0%&	36.0		C,H,K,M,V	G, J	C, G	DAL2,TEC
M8340108^36R5%&	36.5		C,H,K,M,V	F	C, G	DAL2,TEC
M8340108^37R4%&	37.4		C,H,K,M,V	F	C, G	DAL2,TEC
M8340108^38R3%&	38.3	See PN Ordering Section	C,H,K,M,V	F	C, G	DAL2,TEC
M8340108^39R0%&	39.0		C,H,K,M,V	G, J	C, G	DAL2,TEC
M8340108^39R2%&	39.2		C,H,K,M,V	F	C, G	DAL2,TEC
M8340108^40R2%&	40.2		C,H,K,M,V	F	C, G	DAL2,TEC
M8340108^41R2%&	41.2		C,H,K,M,V	F	C, G	DAL2,TEC
	Resistance	Power	Char.	Res.		
Part Number	Value (Ohms)	Rating	(^)	Tolerance	Schematic	Manufacturer
M8340108^42R2%&	42.2	See PN Ordering Section	C,H,K,M,V	F	C, G	DAL2,TEC
M8340108^43R0%&	43.0		C,H,K,M,V	G, J	C, G	DAL2,TEC
M8340108^43R2%&	43.2		C,H,K,M,V	F	C, G	DAL2,TEC
M8340108^44R2%&	44.2		C,H,K,M,V	F	C, G	DAL2,TEC
M8340108^45R3%&	45.3		C,H,K,M,V	F	C, G	DAL2,TEC
M8340108^46R4%&	46.4	See PN Ordering Section	C,H,K,M,V	F	C, G	DAL2,TEC
M8340108^47R0%&	47.0		C,H,K,M,V	G, J	C, G	DAL2,TEC
M8340108^47R5%&	47.5		C,H,K,M,V	F	C, G	DAL2,TEC
M8340108^48R7%&	48.7		C,H,K,M,V	F	C, G	DAL2,TEC
M8340108^49R9%&	49.9		C,H,K,M,V	F	C, G	DAL2,TEC
M8340108^51R0%&	51.0	See PN Ordering Section	C,H,K,M,V	G, J	C, G	DAL2,TEC
M8340108^51R1%&	51.1		C,H,K,M,V	F	C, G	DAL2,TEC
M8340108^52R3%&	52.3		C,H,K,M,V	F	C, G	DAL2,TEC
M8340108^53R6%&	53.6		C,H,K,M,V	F	C, G	DAL2,TEC
	Resistance	Power	Char.	Res.		
Part Number	Value (Ohms)	Rating	(^)	Tolerance	Schematic	Manufacturer
M8340108^54R9%&	54.9		C,H,K,M,V	F	C, G	DAL2,TEC
M8340108^56R0%&	56.0	See PN Ordering Section	C,H,K,M,V	G, J	C, G	DAL2,TEC
M8340108^56R2%&	56.2		C,H,K,M,V	F	C, G	DAL2,TEC
M8340108^57R6%&	57.6		C,H,K,M,V	F	C, G	DAL2,TEC
M8340108^59R0%&	59.0		C,H,K,M,V	F	C, G	DAL2,TEC
M8340108^60R4%&	60.4		C,H,K,M,V	F	C, G	DAL2,TEC
M8340108^61R9%&	61.9	See PN Ordering Section	C,H,K,M,V	F	C, G	DAL2,TEC
M8340108^62R0%&	62.0		C,H,K,M,V	G, J	C, G	DAL2,TEC
M8340108^63R4%&	63.4		C,H,K,M,V	F	C, G	DAL2,TEC
M8340108^64R9%&	64.9		C,H,K,M,V	F	C, G	DAL2,TEC
M8340108^66R5%&	66.5		C,H,K,M,V	F	C, G	DAL2,TEC
M8340108^68R0%&	68.0	See PN Ordering Section	C,H,K,M,V	G, J	C, G	DAL2,TEC
M8340108^68R1%&	68.1		C,H,K,M,V	F	C, G	DAL2,TEC
M8340108^69R8%&	69.8		C,H,K,M,V	F	C, G	DAL2,TEC
	Resistance	Power	Char.	Res.		
Part Number	Value (Ohms)	Rating	(^)	Tolerance	Schematic	Manufacturer
M8340108^71R5%&	71.5		C,H,K,M,V	F	C, G	DAL2,TEC
M8340108^73R2%&	73.2		C,H,K,M,V	F	C, G	DAL2,TEC
M8340108^75R0%&	75.0	See PN Ordering Section	C,H,K,M,V	F, G, J	C, G	DAL2,TEC
M8340108^76R8%&	76.8		C,H,K,M,V	F	C, G	DAL2,TEC
M8340108^78R7%&	78.7		C,H,K,M,V	F	C, G	DAL2,TEC

M8340108^80R6%&	80.6		C,H,K,M,V	F	C, G	DAL2,TEC
M8340108^82R0%&	82.0		C,H,K,M,V	G, J	C, G	DAL2,TEC
M8340108^82R5%&	82.5	See PN Ordering Section	C,H,K,M,V	F	C, G	DAL2,TEC
M8340108^84R5%&	84.5		C,H,K,M,V	F	C, G	DAL2,TEC
M8340108^86R6%&	86.6		C,H,K,M,V	F	C, G	DAL2,TEC
M8340108^88R7%&	88.7		C,H,K,M,V	F	C, G	DAL2,TEC
M8340108^90R9%&	90.9		C,H,K,M,V	F	C, G	DAL2,TEC
M8340108^91R0%&	91.0	See PN Ordering Section	C,H,K,M,V	G, J	C, G	DAL2,TEC
M8340108^93R1%&	93.1		C,H,K,M,V	F	C, G	DAL2,TEC
	Resistance	Power	Char.	Res.		
Part Number	Value (Ohms)	Rating	(^)	Tolerance	Schematic	Manufacturer
M8340108^95R3%&	95.3		C,H,K,M,V	F	C, G	DAL2,TEC
M8340108^97R6%&	97.6		C,H,K,M,V	F	C, G	DAL2,TEC

MIL-PRF-83401/8 (RZ080) Film Resistor Networks: 100 Ohms Through 988 Ohms

	Resistance	Power	Char.	Res.		
Part Number	Value (Ohms)	Rating	(^)	Tolerance	Schematic	Manufacturer
M8340108^1000%&	100		C,H,K,M,V	B, D, F, G, J	C, G	DAL2,IRC2,TEC
M8340108^1010%&	101	See PN Ordering Section	C,H,K,M,V	B, D	C, G	DAL2,IRC2,TEC
M8340108^1020%&	102		C,H,K,M,V	B, D, F	C, G	DAL2,IRC2,TEC
M8340108^1040%&	104		C,H,K,M,V	B, D	C, G	DAL2,IRC2,TEC
M8340108^1050%&	105		C,H,K,M,V	B, D, F	C, G	DAL2,IRC2,TEC
M8340108^1060%&	106		C,H,K,M,V	B, D	C, G	DAL2,IRC2,TEC
M8340108^1070%&	107	See PN Ordering Section	C,H,K,M,V	B, D, F	C, G	DAL2,IRC2,TEC
M8340108^1090%&	109		C,H,K,M,V	B, D	C, G	DAL2,IRC2,TEC
M8340108^1100%&	110		C,H,K,M,V	B, D, F, G, J	C, G	DAL2,IRC2,TEC
M8340108^1110%&	111		C,H,K,M,V	B, D	C, G	DAL2,IRC2,TEC
M8340108^1130%&	113		C,H,K,M,V	B, D, F	C, G	DAL2,IRC2,TEC
M8340108^1140%&	114	See PN Ordering Section	C,H,K,M,V	B, D	C, G	DAL2,IRC2,TEC
M8340108^1150%&	115		C,H,K,M,V	B, D, F	C, G	DAL2,IRC2,TEC
M8340108^1170%&	117		C,H,K,M,V	B, D	C, G	DAL2,IRC2,TEC
	Resistance	Power	Char.	Res.		
Part Number	Value (Ohms)	Rating	(^)	Tolerance	Schematic	Manufacturer
M8340108^1180%&	118		C,H,K,M,V	B, D, F	C, G	DAL2,IRC2,TEC
M8340108^1200%&	120		C,H,K,M,V	B, D, F, G, J	C, G	DAL2,IRC2,TEC
M8340108^1210%&	121	See PN Ordering Section	C,H,K,M,V	B, D, F	C, G	DAL2,IRC2,TEC
M8340108^1230%&	123		C,H,K,M,V	B, D	C, G	DAL2,IRC2,TEC
M8340108^1240%&	124		C,H,K,M,V	B, D, F	C, G	DAL2,IRC2,TEC
M8340108^1260%&	126		C,H,K,M,V	B, D	C, G	DAL2,IRC2,TEC
M8340108^1270%&	127		C,H,K,M,V	B, D, F	C, G	DAL2,IRC2,TEC
M8340108^1290%&	129	See PN Ordering Section	C,H,K,M,V	B, D	C, G	DAL2,IRC2,TEC
M8340108^1300%&	130		C,H,K,M,V	B, D, F, G, J	C, G	DAL2,IRC2,TEC
M8340108^1320%&	132		C,H,K,M,V	B, D	C, G	DAL2,IRC2,TEC
M8340108^1330%&	133		C,H,K,M,V	B, D, F	C, G	DAL2,IRC2,TEC

M8340108^1350%&	135	See PN Ordering Section	C,H,K,M,V	B, D	C, G	DAL2,IRC2,TEC
M8340108^1370%&	137		C,H,K,M,V	B, D, F	C, G	DAL2,IRC2,TEC
M8340108^1380%&	138		C,H,K,M,V	B, D	C, G	DAL2,IRC2,TEC
	Resistance	Power	Char.	Res.		
Part Number	Value (Ohms)	Rating	(^)	Tolerance	Schematic	Manufacturer
M8340108^1400%&	140		C,H,K,M,V	B, D, F	C, G	DAL2,IRC2,TEC
M8340108^1420%&	142		C,H,K,M,V	B, D	C, G	DAL2,IRC2,TEC
M8340108^1430%&	143	See PN Ordering Section	C,H,K,M,V	B, D, F	C, G	DAL2,IRC2,TEC
M8340108^1450%&	145		C,H,K,M,V	B, D	C, G	DAL2,IRC2,TEC
M8340108^1470%&	147		C,H,K,M,V	B, D, F	C, G	DAL2,IRC2,TEC
M8340108^1490%&	149		C,H,K,M,V	B, D	C, G	DAL2,IRC2,TEC
M8340108^1500%&	150		C,H,K,M,V	B, D, F, G, J	C, G	DAL2,IRC2,TEC
M8340108^1520%&	152	See PN Ordering Section	C,H,K,M,V	B, D	C, G	DAL2,IRC2,TEC
M8340108^1540%&	154		C,H,K,M,V	B, D, F	C, G	DAL2,IRC2,TEC
M8340108^1560%&	156		C,H,K,M,V	B, D	C, G	DAL2,IRC2,TEC
M8340108^1580%&	158		C,H,K,M,V	B, D, F	C, G	DAL2,IRC2,TEC
M8340108^1600%&	160		C,H,K,M,V	B, D, G, J	C, G	DAL2,IRC2,TEC
M8340108^1620%&	162	See PN Ordering Section	C,H,K,M,V	B, D, F	C, G	DAL2,IRC2,TEC
M8340108^1640%&	164		C,H,K,M,V	B, D	C, G	DAL2,IRC2,TEC
	Resistance	Power	Char.	Res.		
Part Number	Value (Ohms)	Rating	(^)	Tolerance	Schematic	Manufacturer
M8340108^1650%&	165		C,H,K,M,V	B, D, F	C, G	DAL2,IRC2,TEC
M8340108^1670%&	167		C,H,K,M,V	B, D	C, G	DAL2,IRC2,TEC
M8340108^1690%&	169		C,H,K,M,V	B, D, F	C, G	DAL2,IRC2,TEC
M8340108^1720%&	172	See PN Ordering Section	C,H,K,M,V	B, D	C, G	DAL2,IRC2,TEC
M8340108^1740%&	174		C,H,K,M,V	B, D, F	C, G	DAL2,IRC2,TEC
M8340108^1760%&	176		C,H,K,M,V	B, D	C, G	DAL2,IRC2,TEC
M8340108^1780%&	178		C,H,K,M,V	B, D, F	C, G	DAL2,IRC2,TEC
M8340108^1800%&	180		C,H,K,M,V	B, D, G, J	C, G	DAL2,IRC2,TEC
M8340108^1820%&	182	See PN Ordering Section	C,H,K,M,V	B, D, F	C, G	DAL2,IRC2,TEC
M8340108^1840%&	184		C,H,K,M,V	B, D	C, G	DAL2,IRC2,TEC
M8340108^1870%&	187		C,H,K,M,V	B, D, F	C, G	DAL2,IRC2,TEC
M8340108^1890%&	189		C,H,K,M,V	B, D	C, G	DAL2,IRC2,TEC
M8340108^1910%&	191		C,H,K,M,V	B, D, F	C, G	DAL2,IRC2,TEC
M8340108^1930%&	193	See PN Ordering Section	C,H,K,M,V	B, D	C, G	DAL2,IRC2,TEC
	Resistance	Power	Char.	Res.		
Part Number	Value (Ohms)	Rating	(^)	Tolerance	Schematic	Manufacturer
M8340108^1960%&	196		C,H,K,M,V	B, D, F	C, G	DAL2,IRC2,TEC
M8340108^1980%&	198		C,H,K,M,V	B, D	C, G	DAL2,IRC2,TEC
M8340108^2000%&	200		C,H,K,M,V	B, D, F, G, J	C, G	DAL2,IRC2,TEC
M8340108^2030%&	203		C,H,K,M,V	B, D	C, G	DAL2,IRC2,TEC
M8340108^2050%&	205	See PN Ordering Section	C,H,K,M,V	B, D, F	C, G	DAL2,IRC2,TEC
M8340108^2080%&	208		C,H,K,M,V	B, D	C, G	DAL2,IRC2,TEC
M8340108^2100%&	210		C,H,K,M,V	B, D, F	C, G	DAL2,IRC2,TEC
M8340108^2130%&	213		C,H,K,M,V	B, D	C, G	DAL2,IRC2,TEC
M8340108^2150%&	215		C,H,K,M,V	B, D, F	C, G	DAL2,IRC2,TEC
M8340108^2180%&	218	See PN Ordering Section	C,H,K,M,V	B, D	C, G	DAL2,IRC2,TEC

M8340108^2200%&	220		C,H,K,M,V	G, J	C, G	DAL2,IRC2,TEC
M8340108^2210%&	221		C,H,K,M,V	B, D, F	C, G	DAL2,IRC2,TEC
M8340108^2230%&	223		C,H,K,M,V	B, D	C, G	DAL2,IRC2,TEC
M8340108^2260%&	226		C,H,K,M,V	B, D, F	C, G	DAL2,IRC2,TEC
	Resistance	Power	Char.	Res.		
Part Number	Value (Ohms)	Rating	(^)	Tolerance	Schematic	Manufacturer
M8340108^2290%&	229	See PN Ordering Section	C,H,K,M,V	B, D	C, G	DAL2,IRC2,TEC
M8340108^2320%&	232		C,H,K,M,V	B, D, F	C, G	DAL2,IRC2,TEC
M8340108^2340%&	234		C,H,K,M,V	B, D	C, G	DAL2,IRC2,TEC
M8340108^2370%&	237		C,H,K,M,V	B, D, F	C, G	DAL2,IRC2,TEC
M8340108^2400%&	240		C,H,K,M,V	B, D, F, G, J	C, G	DAL2,IRC2,TEC
M8340108^2430%&	243	See PN Ordering Section	C,H,K,M,V	B, D, F	C, G	DAL2,IRC2,TEC
M8340108^2460%&	246		C,H,K,M,V	B, D	C, G	DAL2,IRC2,TEC
M8340108^2490%&	249		C,H,K,M,V	B, D, F	C, G	DAL2,IRC2,TEC
M8340108^2520%&	252		C,H,K,M,V	B, D	C, G	DAL2,IRC2,TEC
M8340108^2550%&	255		C,H,K,M,V	B, D, F	C, G	DAL2,IRC2,TEC
M8340108^2580%&	258	See PN Ordering Section	C,H,K,M,V	B, D	C, G	DAL2,IRC2,TEC
M8340108^2610%&	261		C,H,K,M,V	B, D, F	C, G	DAL2,IRC2,TEC
M8340108^2640%&	264		C,H,K,M,V	B, D	C, G	DAL2,IRC2,TEC
M8340108^2670%&	267		C,H,K,M,V	B, D, F	C, G	DAL2,IRC2,TEC
	Resistance	Power	Char.	Res.		
Part Number	Value (Ohms)	Rating	(^)	Tolerance	Schematic	Manufacturer
M8340108^2700%&	270		C,H,K,M,V	G, J	C, G	DAL2,IRC2,TEC
M8340108^2710%&	271	See PN Ordering Section	C,H,K,M,V	B, D	C, G	DAL2,IRC2,TEC
M8340108^2740%&	274		C,H,K,M,V	B, D, F	C, G	DAL2,IRC2,TEC
M8340108^2770%&	277		C,H,K,M,V	B, D	C, G	DAL2,IRC2,TEC
M8340108^2800%&	280		C,H,K,M,V	B, D, F	C, G	DAL2,IRC2,TEC
M8340108^2840%&	284		C,H,K,M,V	B, D	C, G	DAL2,IRC2,TEC
M8340108^2870%&	287	See PN Ordering Section	C,H,K,M,V	B, D, F	C, G	DAL2,IRC2,TEC
M8340108^2910%&	291		C,H,K,M,V	B, D	C, G	DAL2,IRC2,TEC
M8340108^2940%&	294		C,H,K,M,V	B, D, F	C, G	DAL2,IRC2,TEC
M8340108^2980%&	298		C,H,K,M,V	B, D	C, G	DAL2,IRC2,TEC
M8340108^3000%&	300		C,H,K,M,V	G, J	C, G	DAL2,IRC2,TEC
M8340108^3010%&	301	See PN Ordering Section	C,H,K,M,V	B, D, F	C, G	DAL2,IRC2,TEC
M8340108^3050%&	305		C,H,K,M,V	B, D	C, G	DAL2,IRC2,TEC
M8340108^3090%&	309		C,H,K,M,V	B, D, F	C, G	DAL2,IRC2,TEC
	Resistance	Power	Char.	Res.		
Part Number	Value (Ohms)	Rating	(^)	Tolerance	Schematic	Manufacturer
M8340108^3120%&	312		C,H,K,M,V	B, D	C, G	DAL2,IRC2,TEC
M8340108^3160%&	316		C,H,K,M,V	B, D, F	C, G	DAL2,IRC2,TEC
M8340108^3200%&	320	See PN Ordering Section	C,H,K,M,V	B, D	C, G	DAL2,IRC2,TEC
M8340108^3240%&	324		C,H,K,M,V	B, D, F	C, G	DAL2,IRC2,TEC
M8340108^3280%&	328		C,H,K,M,V	B, D	C, G	DAL2,IRC2,TEC
M8340108^3300%&	330		C,H,K,M,V	G, J	C, G	DAL2,IRC2,TEC
M8340108^3320%&	332		C,H,K,M,V	B, D, F	C, G	DAL2,IRC2,TEC
M8340108^3360%&	336	See PN Ordering Section	C,H,K,M,V	B, D	C, G	DAL2,IRC2,TEC
M8340108^3400%&	340		C,H,K,M,V	B, D, F	C, G	DAL2,IRC2,TEC

M8340108^3440%&	344		C,H,K,M,V	B, D	C, G	DAL2,IRC2,TEC
M8340108^3480%&	348		C,H,K,M,V	B, D, F	C, G	DAL2,IRC2,TEC
M8340108^3520%&	352		C,H,K,M,V	B, D	C, G	DAL2,IRC2,TEC
M8340108^3570%&	357	See PN Ordering Section	C,H,K,M,V	B, D, F	C, G	DAL2,IRC2,TEC
M8340108^3600%&	360		C,H,K,M,V	G, J	C, G	DAL2,IRC2,TEC
	Resistance	Power	Char.	Res.		
Part Number	Value (Ohms)	Rating	(^)	Tolerance	Schematic	Manufacturer
M8340108^3610%&	361		C,H,K,M,V	B, D	C, G	DAL2,IRC2,TEC
M8340108^3650%&	365		C,H,K,M,V	B, D, F	C, G	DAL2,IRC2,TEC
M8340108^3700%&	370		C,H,K,M,V	B, D	C, G	DAL2,IRC2,TEC
M8340108^3740%&	374	See PN Ordering Section	C,H,K,M,V	B, D, F	C, G	DAL2,IRC2,TEC
M8340108^3790%&	379		C,H,K,M,V	B, D	C, G	DAL2,IRC2,TEC
M8340108^3830%&	383		C,H,K,M,V	B, D, F	C, G	DAL2,IRC2,TEC
M8340108^3880%&	388		C,H,K,M,V	B, D	C, G	DAL2,IRC2,TEC
M8340108^3900%&	390		C,H,K,M,V	G, J	C, G	DAL2,IRC2,TEC
M8340108^3920%&	392	See PN Ordering Section	C,H,K,M,V	B, D, F	C, G	DAL2,IRC2,TEC
M8340108^3970%&	397		C,H,K,M,V	B, D	C, G	DAL2,IRC2,TEC
M8340108^4020%&	402		C,H,K,M,V	B, D, F	C, G	DAL2,IRC2,TEC
M8340108^4070%&	407		C,H,K,M,V	B, D	C, G	DAL2,IRC2,TEC
M8340108^4120%&	412		C,H,K,M,V	B, D, F	C, G	DAL2,IRC2,TEC
M8340108^4170%&	417	See PN Ordering Section	C,H,K,M,V	B, D	C, G	DAL2,IRC2,TEC
	Resistance	Power	Char.	Res.		
Part Number	Value (Ohms)	Rating	(^)	Tolerance	Schematic	Manufacturer
M8340108^4220%&	422		C,H,K,M,V	B, D, F	C, G	DAL2,IRC2,TEC
M8340108^4270%&	427		C,H,K,M,V	B, D	C, G	DAL2,IRC2,TEC
M8340108^4300%&	430		C,H,K,M,V	G, J	C, G	DAL2,IRC2,TEC
M8340108^4320%&	432		C,H,K,M,V	B, D, F	C, G	DAL2,IRC2,TEC
M8340108^4370%&	437	See PN Ordering Section	C,H,K,M,V	B, D	C, G	DAL2,IRC2,TEC
M8340108^4420%&	442		C,H,K,M,V	B, D, F	C, G	DAL2,IRC2,TEC
M8340108^4480%&	448		C,H,K,M,V	B, D	C, G	DAL2,IRC2,TEC
M8340108^4530%&	453		C,H,K,M,V	B, D, F	C, G	DAL2,IRC2,TEC
M8340108^4590%&	459		C,H,K,M,V	B, D	C, G	DAL2,IRC2,TEC
M8340108^4640%&	464	See PN Ordering Section	C,H,K,M,V	B, D, F	C, G	DAL2,IRC2,TEC
M8340108^4700%&	470		C,H,K,M,V	B, D, G, J	C, G	DAL2,IRC2,TEC
M8340108^4750%&	475		C,H,K,M,V	B, D, F	C, G	DAL2,IRC2,TEC
M8340108^4810%&	481		C,H,K,M,V	B, D	C, G	DAL2,IRC2,TEC
M8340108^4870%&	487		C,H,K,M,V	B, D, F	C, G	DAL2,IRC2,TEC
	Resistance	Power	Char.	Res.		
Part Number	Value (Ohms)	Rating	(^)	Tolerance	Schematic	Manufacturer
M8340108^4930%&	493	See PN Ordering Section	C,H,K,M,V	B, D	C, G	DAL2,IRC2,TEC
M8340108^4990%&	499		C,H,K,M,V	B, D, F	C, G	DAL2,IRC2,TEC
M8340108^5050%&	505		C,H,K,M,V	B, D	C, G	DAL2,IRC2,TEC
M8340108^5100%&	510		C,H,K,M,V	G, J	C, G	DAL2,IRC2,TEC
M8340108^5110%&	511		C,H,K,M,V	B, D, F	C, G	DAL2,IRC2,TEC
M8340108^5170%&	517	See PN Ordering Section	C,H,K,M,V	B, D	C, G	DAL2,IRC2,TEC
M8340108^5230%&	523		C,H,K,M,V	B, D, F	C, G	DAL2,IRC2,TEC
M8340108^5300%&	530		C,H,K,M,V	B, D	C, G	DAL2,IRC2,TEC

M8340108^5360%&	536		C,H,K,M,V	B, D, F	C, G	DAL2,IRC2,TEC
M8340108^5420%&	542		C,H,K,M,V	B, D	C, G	DAL2,IRC2,TEC
M8340108^5490%&	549	See PN Ordering Section	C,H,K,M,V	B, D, F	C, G	DAL2,IRC2,TEC
M8340108^5560%&	556		C,H,K,M,V	B, D	C, G	DAL2,IRC2,TEC
M8340108^5600%&	560		C,H,K,M,V	G, J	C, G	DAL2,IRC2,TEC
M8340108^5620%&	562		C,H,K,M,V	B, D, F	C, G	DAL2,IRC2,TEC
	Resistance	Power	Char.	Res.		
Part Number	Value (Ohms)	Rating	(^)	Tolerance	Schematic	Manufacturer
M8340108^5690%&	569		C,H,K,M,V	B, D	C, G	DAL2,IRC2,TEC
M8340108^5760%&	576	See PN Ordering Section	C,H,K,M,V	B, D, F	C, G	DAL2,IRC2,TEC
M8340108^5830%&	583		C,H,K,M,V	B, D	C, G	DAL2,IRC2,TEC
M8340108^5900%&	590		C,H,K,M,V	B, D, F	C, G	DAL2,IRC2,TEC
M8340108^5970%&	597		C,H,K,M,V	B, D	C, G	DAL2,IRC2,TEC
M8340108^6040%&	604		C,H,K,M,V	B, D, F	C, G	DAL2,IRC2,TEC
M8340108^6120%&	612	See PN Ordering Section	C,H,K,M,V	B, D	C, G	DAL2,IRC2,TEC
M8340108^6190%&	619		C,H,K,M,V	B, D, F	C, G	DAL2,IRC2,TEC
M8340108^6200%&	620		C,H,K,M,V	G, J	C, G	DAL2,IRC2,TEC
M8340108^6260%&	626		C,H,K,M,V	B, D	C, G	DAL2,IRC2,TEC
M8340108^6340%&	634		C,H,K,M,V	B, D, F	C, G	DAL2,IRC2,TEC
M8340108^6420%&	642	See PN Ordering Section	C,H,K,M,V	B, D	C, G	DAL2,IRC2,TEC
M8340108^6490%&	649		C,H,K,M,V	B, D, F	C, G	DAL2,IRC2,TEC
M8340108^6570%&	657		C,H,K,M,V	B, D	C, G	DAL2,IRC2,TEC
	Resistance	Power	Char.	Res.		
Part Number	Value (Ohms)	Rating	(^)	Tolerance	Schematic	Manufacturer
M8340108^6650%&	665		C,H,K,M,V	B, D, F	C, G	DAL2,IRC2,TEC
M8340108^6730%&	673		C,H,K,M,V	B, D	C, G	DAL2,IRC2,TEC
M8340108^6800%&	680	See PN Ordering Section	C,H,K,M,V	G, J	C, G	DAL2,IRC2,TEC
M8340108^6810%&	681		C,H,K,M,V	B, D, F	C, G	DAL2,IRC2,TEC
M8340108^6900%&	690		C,H,K,M,V	B, D	C, G	DAL2,IRC2,TEC
M8340108^6980%&	698		C,H,K,M,V	B, D, F	C, G	DAL2,IRC2,TEC
M8340108^7060%&	706		C,H,K,M,V	B, D	C, G	DAL2,IRC2,TEC
M8340108^7150%&	715	See PN Ordering Section	C,H,K,M,V	B, D, F	C, G	DAL2,IRC2,TEC
M8340108^7230%&	723		C,H,K,M,V	B, D	C, G	DAL2,IRC2,TEC
M8340108^7320%&	732		C,H,K,M,V	B, D, F	C, G	DAL2,IRC2,TEC
M8340108^7410%&	741		C,H,K,M,V	B, D	C, G	DAL2,IRC2,TEC
M8340108^7500%&	750		C,H,K,M,V	B, D, F, G, J	C, G	DAL2,IRC2,TEC
M8340108^7590%&	759	See PN Ordering Section	C,H,K,M,V	B, D	C, G	DAL2,IRC2,TEC
M8340108^7680%&	768		C,H,K,M,V	B, D, F	C, G	DAL2,IRC2,TEC
	Resistance	Power	Char.	Res.		
Part Number	Value (Ohms)	Rating	(^)	Tolerance	Schematic	Manufacturer
M8340108^7770%&	777		C,H,K,M,V	B, D	C, G	DAL2,IRC2,TEC
M8340108^7870%&	787		C,H,K,M,V	B, D, F	C, G	DAL2,IRC2,TEC
M8340108^7960%&	796		C,H,K,M,V	B, D	C, G	DAL2,IRC2,TEC
M8340108^8060%&	806	See PN Ordering Section	C,H,K,M,V	B, D, F	C, G	DAL2,IRC2,TEC
M8340108^8160%&	816		C,H,K,M,V	B, D	C, G	DAL2,IRC2,TEC
M8340108^8200%&	820		C,H,K,M,V	G, J	C, G	DAL2,IRC2,TEC
M8340108^8250%&	825		C,H,K,M,V	B, D, F	C, G	DAL2,IRC2,TEC

M8340108^8350%&	835		C,H,K,M,V	B, D	C, G	DAL2,IRC2,TEC
M8340108^8450%&	845	See PN Ordering Section	C,H,K,M,V	B, D, F	C, G	DAL2,IRC2,TEC
M8340108^8560%&	856		C,H,K,M,V	B, D	C, G	DAL2,IRC2,TEC
M8340108^8660%&	866		C,H,K,M,V	B, D, F	C, G	DAL2,IRC2,TEC
M8340108^8760%&	876		C,H,K,M,V	B, D	C, G	DAL2,IRC2,TEC
M8340108^8870%&	887		C,H,K,M,V	B, D, F	C, G	DAL2,IRC2,TEC
M8340108^8980%&	898	See PN Ordering Section	C,H,K,M,V	B, D	C, G	DAL2,IRC2,TEC
	Resistance	Power	Char.	Res.		
Part Number	Value (Ohms)	Rating	(^)	Tolerance	Schematic	Manufacturer
M8340108^9090%&	909		C,H,K,M,V	B, D, F	C, G	DAL2,IRC2,TEC
M8340108^9100%&	910		C,H,K,M,V	G, J	C, G	DAL2,IRC2,TEC
M8340108^9200%&	920		C,H,K,M,V	B, D	C, G	DAL2,IRC2,TEC
M8340108^9310%&	931		C,H,K,M,V	B, D, F	C, G	DAL2,IRC2,TEC
M8340108^9420%&	942	See PN Ordering Section	C,H,K,M,V	B, D	C, G	DAL2,IRC2,TEC
M8340108^9530%&	953		C,H,K,M,V	B, D, F	C, G	DAL2,IRC2,TEC
M8340108^9650%&	965		C,H,K,M,V	B, D	C, G	DAL2,IRC2,TEC
M8340108^9760%&	976		C,H,K,M,V	B, D, F	C, G	DAL2,IRC2,TEC
M8340108^9880%&	988		C,H,K,M,V	B, D	C, G	DAL2,IRC2,TEC

MIL-PRF-83401/8 (RZ080) Film Resistor Networks: 1,000 Ohms Through 9,880 Ohms

	Resistance	Power	Char.	Res.		
Part Number	Value (Ohms)	Rating	(^)	Tolerance	Schematic	Manufacturer
M8340108^1001%&	1,000	See PN Ordering Section	C,H,K,M,V	B, D, F, G, J	C, G	DAL2,IRC2,TEC
M8340108^1011%&	1,010		C,H,K,M,V	B, D	C, G	DAL2,IRC2,TEC
M8340108^1021%&	1,020		C,H,K,M,V	B, D, F	C, G	DAL2,IRC2,TEC
M8340108^1041%&	1,040		C,H,K,M,V	B, D	C, G	DAL2,IRC2,TEC
M8340108^1051%&	1,050		C,H,K,M,V	B, D, F	C, G	DAL2,IRC2,TEC
M8340108^1061%&	1,060	See PN Ordering Section	C,H,K,M,V	B, D	C, G	DAL2,IRC2,TEC
M8340108^1071%&	1,070		C,H,K,M,V	B, D, F	C, G	DAL2,IRC2,TEC
M8340108^1091%&	1,090		C,H,K,M,V	B, D	C, G	DAL2,IRC2,TEC
M8340108^1101%&	1,100		C,H,K,M,V	B, D, F, G, J	C, G	DAL2,IRC2,TEC
M8340108^1111%&	1,110		C,H,K,M,V	B, D	C, G	DAL2,IRC2,TEC
M8340108^1131%&	1,130	See PN Ordering Section	C,H,K,M,V	B, D, F	C, G	DAL2,IRC2,TEC
M8340108^1141%&	1,140		C,H,K,M,V	B, D	C, G	DAL2,IRC2,TEC
M8340108^1151%&	1,150		C,H,K,M,V	B, D, F	C, G	DAL2,IRC2,TEC
M8340108^1171%&	1,170		C,H,K,M,V	B, D	C, G	DAL2,IRC2,TEC
	Resistance	Power	Char.	Res.		
Part Number	Value (Ohms)	Rating	(^)	Tolerance	Schematic	Manufacturer
M8340108^1181%&	1,180		C,H,K,M,V	B, D, F	C, G	DAL2,IRC2,TEC
M8340108^1201%&	1,200	See PN Ordering Section	C,H,K,M,V	B, D, F, G, J	C, G	DAL2,IRC2,TEC
M8340108^1211%&	1,210		C,H,K,M,V	B, D, F	C, G	DAL2,IRC2,TEC
M8340108^1231%&	1,230		C,H,K,M,V	B, D	C, G	DAL2,IRC2,TEC
M8340108^1241%&	1,240		C,H,K,M,V	B, D, F	C, G	DAL2,IRC2,TEC
M8340108^1261%&	1,260		C,H,K,M,V	B, D	C, G	DAL2,IRC2,TEC

M8340108^1271%&	1,270	See PN Ordering Section	C,H,K,M,V	B, D, F	C, G	DAL2,IRC2,TEC
M8340108^1291%&	1,290		C,H,K,M,V	B, D	C, G	DAL2,IRC2,TEC
M8340108^1301%&	1,300		C,H,K,M,V	B, D, F, G, J	C, G	DAL2,IRC2,TEC
M8340108^1321%&	1,320		C,H,K,M,V	B, D	C, G	DAL2,IRC2,TEC
M8340108^1331%&	1,330		C,H,K,M,V	B, D, F	C, G	DAL2,IRC2,TEC
M8340108^1351%&	1,350	See PN Ordering Section	C,H,K,M,V	B, D	C, G	DAL2,IRC2,TEC
M8340108^1371%&	1,370		C,H,K,M,V	B, D, F	C, G	DAL2,IRC2,TEC
M8340108^1381%&	1,380		C,H,K,M,V	B, D	C, G	DAL2,IRC2,TEC
	Resistance	Power	Char.	Res.		
Part Number	Value (Ohms)	Rating	(^)	Tolerance	Schematic	Manufacturer
M8340108^1401%&	1,400		C,H,K,M,V	B, D, F	C, G	DAL2,IRC2,TEC
M8340108^1421%&	1,420		C,H,K,M,V	B, D	C, G	DAL2,IRC2,TEC
M8340108^1431%&	1,430	See PN Ordering Section	C,H,K,M,V	B, D, F	C, G	DAL2,IRC2,TEC
M8340108^1451%&	1,450		C,H,K,M,V	B, D	C, G	DAL2,IRC2,TEC
M8340108^1471%&	1,470		C,H,K,M,V	B, D, F	C, G	DAL2,IRC2,TEC
M8340108^1491%&	1,490		C,H,K,M,V	B, D	C, G	DAL2,IRC2,TEC
M8340108^1501%&	1,500		C,H,K,M,V	B, D, F, G, J	C, G	DAL2,IRC2,TEC
M8340108^1521%&	1,520	See PN Ordering Section	C,H,K,M,V	B, D	C, G	DAL2,IRC2,TEC
M8340108^1541%&	1,540		C,H,K,M,V	B, D, F	C, G	DAL2,IRC2,TEC
M8340108^1561%&	1,560		C,H,K,M,V	B, D	C, G	DAL2,IRC2,TEC
M8340108^1581%&	1,580		C,H,K,M,V	B, D, F	C, G	DAL2,IRC2,TEC
M8340108^1601%&	1,600		C,H,K,M,V	B, D, G, J	C, G	DAL2,IRC2,TEC
M8340108^1621%&	1,620	See PN Ordering Section	C,H,K,M,V	B, D, F	C, G	DAL2,IRC2,TEC
M8340108^1641%&	1,640		C,H,K,M,V	B, D	C, G	DAL2,IRC2,TEC
	Resistance	Power	Char.	Res.		
Part Number	Value (Ohms)	Rating	(^)	Tolerance	Schematic	Manufacturer
M8340108^1651%&	1,650		C,H,K,M,V	B, D, F	C, G	DAL2,IRC2,TEC
M8340108^1671%&	1,670		C,H,K,M,V	B, D	C, G	DAL2,IRC2,TEC
M8340108^1691%&	1,690		C,H,K,M,V	B, D, F	C, G	DAL2,IRC2,TEC
M8340108^1721%&	1,720	See PN Ordering Section	C,H,K,M,V	B, D	C, G	DAL2,IRC2,TEC
M8340108^1741%&	1,740		C,H,K,M,V	B, D, F	C, G	DAL2,IRC2,TEC
M8340108^1761%&	1,760		C,H,K,M,V	B, D	C, G	DAL2,IRC2,TEC
M8340108^1781%&	1,780		C,H,K,M,V	B, D, F	C, G	DAL2,IRC2,TEC
M8340108^1801%&	1,800		C,H,K,M,V	B, D, G, J	C, G	DAL2,IRC2,TEC
M8340108^1821%&	1,820	See PN Ordering Section	C,H,K,M,V	B, D, F	C, G	DAL2,IRC2,TEC
M8340108^1841%&	1,840		C,H,K,M,V	B, D	C, G	DAL2,IRC2,TEC
M8340108^1871%&	1,870		C,H,K,M,V	B, D, F	C, G	DAL2,IRC2,TEC
M8340108^1891%&	1,890		C,H,K,M,V	B, D	C, G	DAL2,IRC2,TEC
M8340108^1911%&	1,910		C,H,K,M,V	B, D, F	C, G	DAL2,IRC2,TEC
M8340108^1931%&	1,930	See PN Ordering Section	C,H,K,M,V	B, D	C, G	DAL2,IRC2,TEC
	Resistance	Power	Char.	Res.		
Part Number	Value (Ohms)	Rating	(^)	Tolerance	Schematic	Manufacturer
M8340108^1961%&	1,960		C,H,K,M,V	B, D, F	C, G	DAL2,IRC2,TEC
M8340108^1981%&	1,980		C,H,K,M,V	B, D	C, G	DAL2,IRC2,TEC
M8340108^2001%&	2,000		C,H,K,M,V	B, D, F, G, J	C, G	DAL2,IRC2,TEC
M8340108^2031%&	2,030		C,H,K,M,V	B, D	C, G	DAL2,IRC2,TEC
M8340108^2051%&	2,050	See PN Ordering Section	C,H,K,M,V	B, D, F	C, G	DAL2,IRC2,TEC

M8340108^2081%&	2,080		C,H,K,M,V	B, D	C, G	DAL2,IRC2,TEC
M8340108^2101%&	2,100		C,H,K,M,V	B, D, F	C, G	DAL2,IRC2,TEC
M8340108^2131%&	2,130		C,H,K,M,V	B, D	C, G	DAL2,IRC2,TEC
M8340108^2151%&	2,150		C,H,K,M,V	B, D, F	C, G	DAL2,IRC2,TEC
M8340108^2181%&	2,180	See PN Ordering Section	C,H,K,M,V	B, D	C, G	DAL2,IRC2,TEC
M8340108^2201%&	2,200		C,H,K,M,V	G, J	C, G	DAL2,IRC2,TEC
M8340108^2211%&	2,210		C,H,K,M,V	B, D, F	C, G	DAL2,IRC2,TEC
M8340108^2231%&	2,230		C,H,K,M,V	B, D	C, G	DAL2,IRC2,TEC
M8340108^2261%&	2,260		C,H,K,M,V	B, D, F	C, G	DAL2,IRC2,TEC
	Resistance	Power	Char.	Res.		
Part Number	Value (Ohms)	Rating	(^)	Tolerance	Schematic	Manufacturer
M8340108^2291%&	2,290	See PN Ordering Section	C,H,K,M,V	B, D	C, G	DAL2,IRC2,TEC
M8340108^2321%&	2,320		C,H,K,M,V	B, D, F	C, G	DAL2,IRC2,TEC
M8340108^2341%&	2,340		C,H,K,M,V	B, D	C, G	DAL2,IRC2,TEC
M8340108^2371%&	2,370		C,H,K,M,V	B, D, F	C, G	DAL2,IRC2,TEC
M8340108^2401%&	2,400		C,H,K,M,V	B, D, F, G, J	C, G	DAL2,IRC2,TEC
M8340108^2431%&	2,430	See PN Ordering Section	C,H,K,M,V	B, D, F	C, G	DAL2,IRC2,TEC
M8340108^2461%&	2,460		C,H,K,M,V	B, D	C, G	DAL2,IRC2,TEC
M8340108^2491%&	2,490		C,H,K,M,V	B, D, F	C, G	DAL2,IRC2,TEC
M8340108^2521%&	2,520		C,H,K,M,V	B, D	C, G	DAL2,IRC2,TEC
M8340108^2551%&	2,550		C,H,K,M,V	B, D, F	C, G	DAL2,IRC2,TEC
M8340108^2581%&	2,580	See PN Ordering Section	C,H,K,M,V	B, D	C, G	DAL2,IRC2,TEC
M8340108^2611%&	2,610		C,H,K,M,V	B, D, F	C, G	DAL2,IRC2,TEC
M8340108^2641%&	2,640		C,H,K,M,V	B, D	C, G	DAL2,IRC2,TEC
M8340108^2671%&	2,670		C,H,K,M,V	B, D, F	C, G	DAL2,IRC2,TEC
	Resistance	Power	Char.	Res.		
Part Number	Value (Ohms)	Rating	(^)	Tolerance	Schematic	Manufacturer
M8340108^2701%&	2,700		C,H,K,M,V	G, J	C, G	DAL2,IRC2,TEC
M8340108^2711%&	2,710	See PN Ordering Section	C,H,K,M,V	B, D	C, G	DAL2,IRC2,TEC
M8340108^2741%&	2,740		C,H,K,M,V	B, D, F	C, G	DAL2,IRC2,TEC
M8340108^2771%&	2,770		C,H,K,M,V	B, D	C, G	DAL2,IRC2,TEC
M8340108^2801%&	2,800		C,H,K,M,V	B, D, F	C, G	DAL2,IRC2,TEC
M8340108^2841%&	2,840		C,H,K,M,V	B, D	C, G	DAL2,IRC2,TEC
M8340108^2871%&	2,870	See PN Ordering Section	C,H,K,M,V	B, D, F	C, G	DAL2,IRC2,TEC
M8340108^2911%&	2,910		C,H,K,M,V	B, D	C, G	DAL2,IRC2,TEC
M8340108^2941%&	2,940		C,H,K,M,V	B, D, F	C, G	DAL2,IRC2,TEC
M8340108^2981%&	2,980		C,H,K,M,V	B, D	C, G	DAL2,IRC2,TEC
M8340108^3001%&	3,000		C,H,K,M,V	G, J	C, G	DAL2,IRC2,TEC
M8340108^3011%&	3,010	See PN Ordering Section	C,H,K,M,V	B, D, F	C, G	DAL2,IRC2,TEC
M8340108^3051%&	3,050		C,H,K,M,V	B, D	C, G	DAL2,IRC2,TEC
M8340108^3091%&	3,090		C,H,K,M,V	B, D, F	C, G	DAL2,IRC2,TEC
	Resistance	Power	Char.	Res.		
Part Number	Value (Ohms)	Rating	(^)	Tolerance	Schematic	Manufacturer
M8340108^3121%&	3,120		C,H,K,M,V	B, D	C, G	DAL2,IRC2,TEC
M8340108^3161%&	3,160		C,H,K,M,V	B, D, F	C, G	DAL2,IRC2,TEC
M8340108^3201%&	3,200	See PN Ordering Section	C,H,K,M,V	B, D	C, G	DAL2,IRC2,TEC
M8340108^3241%&	3,240		C,H,K,M,V	B, D, F	C, G	DAL2,IRC2,TEC

M8340108^3281%&	3,280		C,H,K,M,V	B, D	C, G	DAL2,IRC2,TEC
M8340108^3301%&	3,300		C,H,K,M,V	G, J	C, G	DAL2,IRC2,TEC
M8340108^3321%&	3,320		C,H,K,M,V	B, D, F	C, G	DAL2,IRC2,TEC
M8340108^3361%&	3,360	See PN Ordering Section	C,H,K,M,V	B, D	C, G	DAL2,IRC2,TEC
M8340108^3401%&	3,400		C,H,K,M,V	B, D, F	C, G	DAL2,IRC2,TEC
M8340108^3441%&	3,440		C,H,K,M,V	B, D	C, G	DAL2,IRC2,TEC
M8340108^3481%&	3,480		C,H,K,M,V	B, D, F	C, G	DAL2,IRC2,TEC
M8340108^3521%&	3,520		C,H,K,M,V	B, D	C, G	DAL2,IRC2,TEC
M8340108^3571%&	3,570	See PN Ordering Section	C,H,K,M,V	B, D, F	C, G	DAL2,IRC2,TEC
M8340108^3601%&	3,600		C,H,K,M,V	G, J	C, G	DAL2,IRC2,TEC
	Resistance	Power	Char.	Res.		
Part Number	Value (Ohms)	Rating	(^)	Tolerance	Schematic	Manufacturer
M8340108^3611%&	3,610		C,H,K,M,V	B, D	C, G	DAL2,IRC2,TEC
M8340108^3651%&	3,650		C,H,K,M,V	B, D, F	C, G	DAL2,IRC2,TEC
M8340108^3701%&	3,700		C,H,K,M,V	B, D	C, G	DAL2,IRC2,TEC
M8340108^3741%&	3,740	See PN Ordering Section	C,H,K,M,V	B, D, F	C, G	DAL2,IRC2,TEC
M8340108^3791%&	3,790		C,H,K,M,V	B, D	C, G	DAL2,IRC2,TEC
M8340108^3831%&	3,830		C,H,K,M,V	B, D, F	C, G	DAL2,IRC2,TEC
M8340108^3881%&	3,880		C,H,K,M,V	B, D	C, G	DAL2,IRC2,TEC
M8340108^3901%&	3,900		C,H,K,M,V	G, J	C, G	DAL2,IRC2,TEC
M8340108^3921%&	3,920	See PN Ordering Section	C,H,K,M,V	B, D, F	C, G	DAL2,IRC2,TEC
M8340108^3971%&	3,970		C,H,K,M,V	B, D	C, G	DAL2,IRC2,TEC
M8340108^4021%&	4,020		C,H,K,M,V	B, D, F	C, G	DAL2,IRC2,TEC
M8340108^4071%&	4,070		C,H,K,M,V	B, D	C, G	DAL2,IRC2,TEC
M8340108^4121%&	4,120		C,H,K,M,V	B, D, F	C, G	DAL2,IRC2,TEC
M8340108^4171%&	4,170	See PN Ordering Section	C,H,K,M,V	B, D	C, G	DAL2,IRC2,TEC
	Resistance	Power	Char.	Res.		
Part Number	Value (Ohms)	Rating	(^)	Tolerance	Schematic	Manufacturer
M8340108^4221%&	4,220		C,H,K,M,V	B, D, F	C, G	DAL2,IRC2,TEC
M8340108^4271%&	4,270		C,H,K,M,V	B, D	C, G	DAL2,IRC2,TEC
M8340108^4301%&	4,300		C,H,K,M,V	G, J	C, G	DAL2,IRC2,TEC
M8340108^4321%&	4,320		C,H,K,M,V	B, D, F	C, G	DAL2,IRC2,TEC
M8340108^4371%&	4,370	See PN Ordering Section	C,H,K,M,V	B, D	C, G	DAL2,IRC2,TEC
M8340108^4421%&	4,420		C,H,K,M,V	B, D, F	C, G	DAL2,IRC2,TEC
M8340108^4481%&	4,480		C,H,K,M,V	B, D	C, G	DAL2,IRC2,TEC
M8340108^4531%&	4,530		C,H,K,M,V	B, D, F	C, G	DAL2,IRC2,TEC
M8340108^4591%&	4,590		C,H,K,M,V	B, D	C, G	DAL2,IRC2,TEC
M8340108^4641%&	4,640	See PN Ordering Section	C,H,K,M,V	B, D, F	C, G	DAL2,IRC2,TEC
M8340108^4701%&	4,700		C,H,K,M,V	B, D, G, J	C, G	DAL2,IRC2,TEC
M8340108^4751%&	4,750		C,H,K,M,V	B, D, F	C, G	DAL2,IRC2,TEC
M8340108^4811%&	4,810		C,H,K,M,V	B, D	C, G	DAL2,IRC2,TEC
M8340108^4871%&	4,870		C,H,K,M,V	B, D, F	C, G	DAL2,IRC2,TEC
	Resistance	Power	Char.	Res.		
Part Number	Value (Ohms)	Rating	(^)	Tolerance	Schematic	Manufacturer
M8340108^4931%&	4,930	See PN Ordering Section	C,H,K,M,V	B, D	C, G	DAL2,IRC2,TEC
M8340108^4991%&	4,990		C,H,K,M,V	B, D, F	C, G	DAL2,IRC2,TEC
M8340108^5051%&	5,050		C,H,K,M,V	B, D	C, G	DAL2,IRC2,TEC

M8340108^5101%&	5,100		C,H,K,M,V	G, J	C, G	DAL2,IRC2,TEC
M8340108^5111%&	5,110		C,H,K,M,V	B, D, F	C, G	DAL2,IRC2,TEC
M8340108^5171%&	5,170	See PN Ordering Section	C,H,K,M,V	B, D	C, G	DAL2,IRC2,TEC
M8340108^5231%&	5,230		C,H,K,M,V	B, D, F	C, G	DAL2,IRC2,TEC
M8340108^5301%&	5,300		C,H,K,M,V	B, D	C, G	DAL2,IRC2,TEC
M8340108^5361%&	5,360		C,H,K,M,V	B, D, F	C, G	DAL2,IRC2,TEC
M8340108^5421%&	5,420		C,H,K,M,V	B, D	C, G	DAL2,IRC2,TEC
M8340108^5491%&	5,490	See PN Ordering Section	C,H,K,M,V	B, D, F	C, G	DAL2,IRC2,TEC
M8340108^5561%&	5,560		C,H,K,M,V	B, D	C, G	DAL2,IRC2,TEC
M8340108^5601%&	5,600		C,H,K,M,V	G, J	C, G	DAL2,IRC2,TEC
M8340108^5621%&	5,620		C,H,K,M,V	B, D, F	C, G	DAL2,IRC2,TEC
	Resistance	Power	Char.	Res.		
Part Number	Value (Ohms)	Rating	(^)	Tolerance	Schematic	Manufacturer
M8340108^5691%&	5,690		C,H,K,M,V	B, D	C, G	DAL2,IRC2,TEC
M8340108^5761%&	5,760	See PN Ordering Section	C,H,K,M,V	B, D, F	C, G	DAL2,IRC2,TEC
M8340108^5831%&	5,830		C,H,K,M,V	B, D	C, G	DAL2,IRC2,TEC
M8340108^5901%&	5,900		C,H,K,M,V	B, D, F	C, G	DAL2,IRC2,TEC
M8340108^5971%&	5,970		C,H,K,M,V	B, D	C, G	DAL2,IRC2,TEC
M8340108^6041%&	6,040		C,H,K,M,V	B, D, F	C, G	DAL2,IRC2,TEC
M8340108^6121%&	6,120	See PN Ordering Section	C,H,K,M,V	B, D	C, G	DAL2,IRC2,TEC
M8340108^6191%&	6,190		C,H,K,M,V	B, D, F	C, G	DAL2,IRC2,TEC
M8340108^6201%&	6,200		C,H,K,M,V	G, J	C, G	DAL2,IRC2,TEC
M8340108^6261%&	6,260		C,H,K,M,V	B, D	C, G	DAL2,IRC2,TEC
M8340108^6341%&	6,340		C,H,K,M,V	B, D, F	C, G	DAL2,IRC2,TEC
M8340108^6421%&	6,420	See PN Ordering Section	C,H,K,M,V	B, D	C, G	DAL2,IRC2,TEC
M8340108^6491%&	6,490		C,H,K,M,V	B, D, F	C, G	DAL2,IRC2,TEC
M8340108^6571%&	6,570		C,H,K,M,V	B, D	C, G	DAL2,IRC2,TEC
	Resistance	Power	Char.	Res.		
Part Number	Value (Ohms)	Rating	(^)	Tolerance	Schematic	Manufacturer
M8340108^6651%&	6,650		C,H,K,M,V	B, D, F	C, G	DAL2,IRC2,TEC
M8340108^6731%&	6,730		C,H,K,M,V	B, D	C, G	DAL2,IRC2,TEC
M8340108^6801%&	6,800	See PN Ordering Section	C,H,K,M,V	G, J	C, G	DAL2,IRC2,TEC
M8340108^6811%&	6,810		C,H,K,M,V	B, D, F	C, G	DAL2,IRC2,TEC
M8340108^6901%&	6,900		C,H,K,M,V	B, D	C, G	DAL2,IRC2,TEC
M8340108^6981%&	6,980		C,H,K,M,V	B, D, F	C, G	DAL2,IRC2,TEC
M8340108^7061%&	7,060		C,H,K,M,V	B, D	C, G	DAL2,IRC2,TEC
M8340108^7151%&	7,150	See PN Ordering Section	C,H,K,M,V	B, D, F	C, G	DAL2,IRC2,TEC
M8340108^7231%&	7,230		C,H,K,M,V	B, D	C, G	DAL2,IRC2,TEC
M8340108^7321%&	7,320		C,H,K,M,V	B, D, F	C, G	DAL2,IRC2,TEC
M8340108^7411%&	7,410		C,H,K,M,V	B, D	C, G	DAL2,IRC2,TEC
M8340108^7501%&	7,500		C,H,K,M,V	B, D, F, G, J	C, G	DAL2,IRC2,TEC
M8340108^7591%&	7,590	See PN Ordering Section	C,H,K,M,V	B, D	C, G	DAL2,IRC2,TEC
M8340108^7681%&	7,680		C,H,K,M,V	B, D, F	C, G	DAL2,IRC2,TEC
	Resistance	Power	Char.	Res.		
Part Number	Value (Ohms)	Rating	(^)	Tolerance	Schematic	Manufacturer
M8340108^7771%&	7,770		C,H,K,M,V	B, D	C, G	DAL2,IRC2,TEC
M8340108^7871%&	7,870		C,H,K,M,V	B, D, F	C, G	DAL2,IRC2,TEC

M8340108^7961%&	7,960		C,H,K,M,V	B, D	C, G	DAL2,IRC2,TEC
M8340108^8061%&	8,060	See PN Ordering Section	C,H,K,M,V	B, D, F	C, G	DAL2,IRC2,TEC
M8340108^8161%&	8,160		C,H,K,M,V	B, D	C, G	DAL2,IRC2,TEC
M8340108^8201%&	8,200		C,H,K,M,V	G, J	C, G	DAL2,IRC2,TEC
M8340108^8251%&	8,250		C,H,K,M,V	B, D, F	C, G	DAL2,IRC2,TEC
M8340108^8351%&	8,350		C,H,K,M,V	B, D	C, G	DAL2,IRC2,TEC
M8340108^8451%&	8,450	See PN Ordering Section	C,H,K,M,V	B, D, F	C, G	DAL2,IRC2,TEC
M8340108^8561%&	8,560		C,H,K,M,V	B, D	C, G	DAL2,IRC2,TEC
M8340108^8661%&	8,660		C,H,K,M,V	B, D, F	C, G	DAL2,IRC2,TEC
M8340108^8761%&	8,760		C,H,K,M,V	B, D	C, G	DAL2,IRC2,TEC
M8340108^8871%&	8,870		C,H,K,M,V	B, D, F	C, G	DAL2,IRC2,TEC
M8340108^8981%&	8,980	See PN Ordering Section	C,H,K,M,V	B, D	C, G	DAL2,IRC2,TEC
	Resistance	Power	Char.	Res.		
Part Number	Value (Ohms)	Rating	(^)	Tolerance	Schematic	Manufacturer
M8340108^9091%&	9,090		C,H,K,M,V	B, D, F	C, G	DAL2,IRC2,TEC
M8340108^9101%&	9,100		C,H,K,M,V	G, J	C, G	DAL2,IRC2,TEC
M8340108^9201%&	9,200		C,H,K,M,V	B, D	C, G	DAL2,IRC2,TEC
M8340108^9311%&	9,310		C,H,K,M,V	B, D, F	C, G	DAL2,IRC2,TEC
M8340108^9421%&	9,420	See PN Ordering Section	C,H,K,M,V	B, D	C, G	DAL2,IRC2,TEC
M8340108^9531%&	9,530		C,H,K,M,V	B, D, F	C, G	DAL2,IRC2,TEC
M8340108^9651%&	9,650		C,H,K,M,V	B, D	C, G	DAL2,IRC2,TEC
M8340108^9761%&	9,760		C,H,K,M,V	B, D, F	C, G	DAL2,IRC2,TEC
M8340108^9881%&	9,880		C,H,K,M,V	B, D	C, G	DAL2,IRC2,TEC

MIL-PRF-83401/8 (RZ080) Film Resistor Networks: 10,000 Ohms Through 98,800 Ohms

	Resistance	Power	Char.	Res.		
Part Number	Value (Ohms)	Rating	(^)	Tolerance	Schematic	Manufacturer
M8340108^1002%&	10,000	See PN Ordering Section	C,H,K,M,V	B, D, F, G, J	C, G	DAL2,IRC2,TEC
M8340108^1012%&	10,100		C,H,K,M,V	B, D	C, G	DAL2,IRC2,TEC
M8340108^1022%&	10,200		C,H,K,M,V	B, D, F	C, G	DAL2,IRC2,TEC
M8340108^1042%&	10,400		C,H,K,M,V	B, D	C, G	DAL2,IRC2,TEC
M8340108^1052%&	10,500		C,H,K,M,V	B, D, F	C, G	DAL2,IRC2,TEC
M8340108^1062%&	10,600	See PN Ordering Section	C,H,K,M,V	B, D	C, G	DAL2,IRC2,TEC
M8340108^1072%&	10,700		C,H,K,M,V	B, D, F	C, G	DAL2,IRC2,TEC
M8340108^1092%&	10,900		C,H,K,M,V	B, D	C, G	DAL2,IRC2,TEC
M8340108^1102%&	11,000		C,H,K,M,V	B, D, F, G, J	C, G	DAL2,IRC2,TEC
M8340108^1112%&	11,100		C,H,K,M,V	B, D	C, G	DAL2,IRC2,TEC
M8340108^1132%&	11,300	See PN Ordering Section	C,H,K,M,V	B, D, F	C, G	DAL2,IRC2,TEC
M8340108^1142%&	11,400		C,H,K,M,V	B, D	C, G	DAL2,IRC2,TEC
M8340108^1152%&	11,500		C,H,K,M,V	B, D, F	C, G	DAL2,IRC2,TEC
M8340108^1172%&	11,700		C,H,K,M,V	B, D	C, G	DAL2,IRC2,TEC
	Resistance	Power	Char.	Res.		
Part Number	Value (Ohms)	Rating	(^)	Tolerance	Schematic	Manufacturer
M8340108^1182%&	11,800		C,H,K,M,V	B, D, F	C, G	DAL2,IRC2,TEC

M8340108^1202%&	12,000	See PN Ordering Section	C,H,K,M,V	B, D, F, G, J	C, G	DAL2,IRC2,TEC
M8340108^1212%&	12,100		C,H,K,M,V	B, D, F	C, G	DAL2,IRC2,TEC
M8340108^1232%&	12,300		C,H,K,M,V	B, D	C, G	DAL2,IRC2,TEC
M8340108^1242%&	12,400		C,H,K,M,V	B, D, F	C, G	DAL2,IRC2,TEC
M8340108^1262%&	12,600		C,H,K,M,V	B, D	C, G	DAL2,IRC2,TEC
M8340108^1272%&	12,700	See PN Ordering Section	C,H,K,M,V	B, D, F	C, G	DAL2,IRC2,TEC
M8340108^1292%&	12,900		C,H,K,M,V	B, D	C, G	DAL2,IRC2,TEC
M8340108^1302%&	13,000		C,H,K,M,V	B, D, F, G, J	C, G	DAL2,IRC2,TEC
M8340108^1322%&	13,200		C,H,K,M,V	B, D	C, G	DAL2,IRC2,TEC
M8340108^1332%&	13,300		C,H,K,M,V	B, D, F	C, G	DAL2,IRC2,TEC
M8340108^1352%&	13,500	See PN Ordering Section	C,H,K,M,V	B, D	C, G	DAL2,IRC2,TEC
M8340108^1372%&	13,700		C,H,K,M,V	B, D, F	C, G	DAL2,IRC2,TEC
M8340108^1382%&	13,800		C,H,K,M,V	B, D	C, G	DAL2,IRC2,TEC
	Resistance	Power	Char.	Res.		
Part Number	Value (Ohms)	Rating	(^)	Tolerance	Schematic	Manufacturer
M8340108^1402%&	14,000		C,H,K,M,V	B, D, F	C, G	DAL2,IRC2,TEC
M8340108^1422%&	14,200		C,H,K,M,V	B, D	C, G	DAL2,IRC2,TEC
M8340108^1432%&	14,300	See PN Ordering Section	C,H,K,M,V	B, D, F	C, G	DAL2,IRC2,TEC
M8340108^1452%&	14,500		C,H,K,M,V	B, D	C, G	DAL2,IRC2,TEC
M8340108^1472%&	14,700		C,H,K,M,V	B, D, F	C, G	DAL2,IRC2,TEC
M8340108^1492%&	14,900		C,H,K,M,V	B, D	C, G	DAL2,IRC2,TEC
M8340108^1502%&	15,000		C,H,K,M,V	B, D, F, G, J	C, G	DAL2,IRC2,TEC
M8340108^1522%&	15,200	See PN Ordering Section	C,H,K,M,V	B, D	C, G	DAL2,IRC2,TEC
M8340108^1542%&	15,400		C,H,K,M,V	B, D, F	C, G	DAL2,IRC2,TEC
M8340108^1562%&	15,600		C,H,K,M,V	B, D	C, G	DAL2,IRC2,TEC
M8340108^1582%&	15,800		C,H,K,M,V	B, D, F	C, G	DAL2,IRC2,TEC
M8340108^1602%&	16,000		C,H,K,M,V	B, D, G, J	C, G	DAL2,IRC2,TEC
M8340108^1622%&	16,200	See PN Ordering Section	C,H,K,M,V	B, D, F	C, G	DAL2,IRC2,TEC
M8340108^1642%&	16,400		C,H,K,M,V	B, D	C, G	DAL2,IRC2,TEC
	Resistance	Power	Char.	Res.		
Part Number	Value (Ohms)	Rating	(^)	Tolerance	Schematic	Manufacturer
M8340108^1652%&	16,500		C,H,K,M,V	B, D, F	C, G	DAL2,IRC2,TEC
M8340108^1672%&	16,700		C,H,K,M,V	B, D	C, G	DAL2,IRC2,TEC
M8340108^1692%&	16,900		C,H,K,M,V	B, D, F	C, G	DAL2,IRC2,TEC
M8340108^1722%&	17,200	See PN Ordering Section	C,H,K,M,V	B, D	C, G	DAL2,IRC2,TEC
M8340108^1742%&	17,400		C,H,K,M,V	B, D, F	C, G	DAL2,IRC2,TEC
M8340108^1762%&	17,600		C,H,K,M,V	B, D	C, G	DAL2,IRC2,TEC
M8340108^1782%&	17,800		C,H,K,M,V	B, D, F	C, G	DAL2,IRC2,TEC
M8340108^1802%&	18,000		C,H,K,M,V	B, D, G, J	C, G	DAL2,IRC2,TEC
M8340108^1822%&	18,200	See PN Ordering Section	C,H,K,M,V	B, D, F	C, G	DAL2,IRC2,TEC
M8340108^1842%&	18,400		C,H,K,M,V	B, D	C, G	DAL2,IRC2,TEC
M8340108^1872%&	18,700		C,H,K,M,V	B, D, F	C, G	DAL2,IRC2,TEC
M8340108^1892%&	18,900		C,H,K,M,V	B, D	C, G	DAL2,IRC2,TEC
M8340108^1912%&	19,100		C,H,K,M,V	B, D, F	C, G	DAL2,IRC2,TEC
M8340108^1932%&	19,300	See PN Ordering Section	C,H,K,M,V	B, D	C, G	DAL2,IRC2,TEC
	Resistance	Power	Char.	Res.		
Part Number	Value (Ohms)	Rating	(^)	Tolerance	Schematic	Manufacturer

M8340108^1962%&	19,600		C,H,K,M,V	B, D, F	C, G	DAL2,IRC2,TEC
M8340108^1982%&	19,800		C,H,K,M,V	B, D	C, G	DAL2,IRC2,TEC
M8340108^2002%&	20,000		C,H,K,M,V	B, D, F, G, J	C, G	DAL2,IRC2,TEC
M8340108^2032%&	20,300		C,H,K,M,V	B, D	C, G	DAL2,IRC2,TEC
M8340108^2052%&	20,500	See PN Ordering Section	C,H,K,M,V	B, D, F	C, G	DAL2,IRC2,TEC
M8340108^2082%&	20,800		C,H,K,M,V	B, D	C, G	DAL2,IRC2,TEC
M8340108^2102%&	21,000		C,H,K,M,V	B, D, F	C, G	DAL2,IRC2,TEC
M8340108^2132%&	21,300		C,H,K,M,V	B, D	C, G	DAL2,IRC2,TEC
M8340108^2152%&	21,500		C,H,K,M,V	B, D, F	C, G	DAL2,IRC2,TEC
M8340108^2182%&	21,800	See PN Ordering Section	C,H,K,M,V	B, D	C, G	DAL2,IRC2,TEC
M8340108^2202%&	22,000		C,H,K,M,V	G, J	C, G	DAL2,IRC2,TEC
M8340108^2212%&	22,100		C,H,K,M,V	B, D, F	C, G	DAL2,IRC2,TEC
M8340108^2232%&	22,300		C,H,K,M,V	B, D	C, G	DAL2,IRC2,TEC
M8340108^2262%&	22,600		C,H,K,M,V	B, D, F	C, G	DAL2,IRC2,TEC
	Resistance	Power	Char.	Res.		
Part Number	Value (Ohms)	Rating	(^)	Tolerance	Schematic	Manufacturer
M8340108^2292%&	22,900	See PN Ordering Section	C,H,K,M,V	B, D	C, G	DAL2,IRC2,TEC
M8340108^2322%&	23,200		C,H,K,M,V	B, D, F	C, G	DAL2,IRC2,TEC
M8340108^2342%&	23,400		C,H,K,M,V	B, D	C, G	DAL2,IRC2,TEC
M8340108^2372%&	23,700		C,H,K,M,V	B, D, F	C, G	DAL2,IRC2,TEC
M8340108^2402%&	24,000		C,H,K,M,V	B, D, F, G, J	C, G	DAL2,IRC2,TEC
M8340108^2432%&	24,300	See PN Ordering Section	C,H,K,M,V	B, D, F	C, G	DAL2,IRC2,TEC
M8340108^2462%&	24,600		C,H,K,M,V	B, D	C, G	DAL2,IRC2,TEC
M8340108^2492%&	24,900		C,H,K,M,V	B, D, F	C, G	DAL2,IRC2,TEC
M8340108^2522%&	25,200		C,H,K,M,V	B, D	C, G	DAL2,IRC2,TEC
M8340108^2552%&	25,500		C,H,K,M,V	B, D, F	C, G	DAL2,IRC2,TEC
M8340108^2582%&	25,800	See PN Ordering Section	C,H,K,M,V	B, D	C, G	DAL2,IRC2,TEC
M8340108^2612%&	26,100		C,H,K,M,V	B, D, F	C, G	DAL2,IRC2,TEC
M8340108^2642%&	26,400		C,H,K,M,V	B, D	C, G	DAL2,IRC2,TEC
M8340108^2672%&	26,700		C,H,K,M,V	B, D, F	C, G	DAL2,IRC2,TEC
	Resistance	Power	Char.	Res.		
Part Number	Value (Ohms)	Rating	(^)	Tolerance	Schematic	Manufacturer
M8340108^2702%&	27,000		C,H,K,M,V	G, J	C, G	DAL2,IRC2,TEC
M8340108^2712%&	27,100	See PN Ordering Section	C,H,K,M,V	B, D	C, G	DAL2,IRC2,TEC
M8340108^2742%&	27,400		C,H,K,M,V	B, D, F	C, G	DAL2,IRC2,TEC
M8340108^2772%&	27,700		C,H,K,M,V	B, D	C, G	DAL2,IRC2,TEC
M8340108^2802%&	28,000		C,H,K,M,V	B, D, F	C, G	DAL2,IRC2,TEC
M8340108^2842%&	28,400		C,H,K,M,V	B, D	C, G	DAL2,IRC2,TEC
M8340108^2872%&	28,700	See PN Ordering Section	C,H,K,M,V	B, D, F	C, G	DAL2,IRC2,TEC
M8340108^2912%&	29,100		C,H,K,M,V	B, D	C, G	DAL2,IRC2,TEC
M8340108^2942%&	29,400		C,H,K,M,V	B, D, F	C, G	DAL2,IRC2,TEC
M8340108^2982%&	29,800		C,H,K,M,V	B, D	C, G	DAL2,IRC2,TEC
M8340108^3002%&	30,000		C,H,K,M,V	G, J	C, G	DAL2,IRC2,TEC
M8340108^3012%&	30,100	See PN Ordering Section	C,H,K,M,V	B, D, F	C, G	DAL2,IRC2,TEC
M8340108^3052%&	30,500		C,H,K,M,V	B, D	C, G	DAL2,IRC2,TEC
M8340108^3092%&	30,900		C,H,K,M,V	B, D, F	C, G	DAL2,IRC2,TEC
	Resistance	Power	Char.	Res.		

Part Number	Value (Ohms)	Rating	(^)	Tolerance	Schematic	Manufacturer
M8340108^3122%&	31,200		C,H,K,M,V	B, D	C, G	DAL2,IRC2,TEC
M8340108^3162%&	31,600		C,H,K,M,V	B, D, F	C, G	DAL2,IRC2,TEC
M8340108^3202%&	32,000	See PN Ordering Section	C,H,K,M,V	B, D	C, G	DAL2,IRC2,TEC
M8340108^3242%&	32,400		C,H,K,M,V	B, D, F	C, G	DAL2,IRC2,TEC
M8340108^3282%&	32,800		C,H,K,M,V	B, D	C, G	DAL2,IRC2,TEC
M8340108^3302%&	33,000		C,H,K,M,V	G, J	C, G	DAL2,IRC2,TEC
M8340108^3322%&	33,200		C,H,K,M,V	B, D, F	C, G	DAL2,IRC2,TEC
M8340108^3362%&	33,600	See PN Ordering Section	C,H,K,M,V	B, D	C, G	DAL2,IRC2,TEC
M8340108^3402%&	34,000		C,H,K,M,V	B, D, F	C, G	DAL2,IRC2,TEC
M8340108^3442%&	34,400		C,H,K,M,V	B, D	C, G	DAL2,IRC2,TEC
M8340108^3482%&	34,800		C,H,K,M,V	B, D, F	C, G	DAL2,IRC2,TEC
M8340108^3522%&	35,200		C,H,K,M,V	B, D	C, G	DAL2,IRC2,TEC
M8340108^3572%&	35,700	See PN Ordering Section	C,H,K,M,V	B, D, F	C, G	DAL2,IRC2,TEC
M8340108^3602%&	36,000		C,H,K,M,V	G, J	C, G	DAL2,IRC2,TEC
	Resistance	Power	Char.	Res.		
Part Number	Value (Ohms)	Rating	(^)	Tolerance	Schematic	Manufacturer
M8340108^3612%&	36,100		C,H,K,M,V	B, D	C, G	DAL2,IRC2,TEC
M8340108^3652%&	36,500		C,H,K,M,V	B, D, F	C, G	DAL2,IRC2,TEC
M8340108^3702%&	37,000		C,H,K,M,V	B, D	C, G	DAL2,IRC2,TEC
M8340108^3742%&	37,400	See PN Ordering Section	C,H,K,M,V	B, D, F	C, G	DAL2,IRC2,TEC
M8340108^3792%&	37,900		C,H,K,M,V	B, D	C, G	DAL2,IRC2,TEC
M8340108^3832%&	38,300		C,H,K,M,V	B, D, F	C, G	DAL2,IRC2,TEC
M8340108^3882%&	38,800		C,H,K,M,V	B, D	C, G	DAL2,IRC2,TEC
M8340108^3902%&	39,000		C,H,K,M,V	G, J	C, G	DAL2,IRC2,TEC
M8340108^3922%&	39,200	See PN Ordering Section	C,H,K,M,V	B, D, F	C, G	DAL2,IRC2,TEC
M8340108^3972%&	39,700		C,H,K,M,V	B, D	C, G	DAL2,IRC2,TEC
M8340108^4022%&	40,200		C,H,K,M,V	B, D, F	C, G	DAL2,IRC2,TEC
M8340108^4072%&	40,700		C,H,K,M,V	B, D	C, G	DAL2,IRC2,TEC
M8340108^4122%&	41,200		C,H,K,M,V	B, D, F	C, G	DAL2,IRC2,TEC
M8340108^4172%&	41,700	See PN Ordering Section	C,H,K,M,V	B, D	C, G	DAL2,IRC2,TEC
	Resistance	Power	Char.	Res.		
Part Number	Value (Ohms)	Rating	(^)	Tolerance	Schematic	Manufacturer
M8340108^4222%&	42,200		C,H,K,M,V	B, D, F	C, G	DAL2,IRC2,TEC
M8340108^4272%&	42,700		C,H,K,M,V	B, D	C, G	DAL2,IRC2,TEC
M8340108^4302%&	43,000		C,H,K,M,V	G, J	C, G	DAL2,IRC2,TEC
M8340108^4322%&	43,200		C,H,K,M,V	B, D, F	C, G	DAL2,IRC2,TEC
M8340108^4372%&	43,700	See PN Ordering Section	C,H,K,M,V	B, D	C, G	DAL2,IRC2,TEC
M8340108^4422%&	44,200		C,H,K,M,V	B, D, F	C, G	DAL2,IRC2,TEC
M8340108^4482%&	44,800		C,H,K,M,V	B, D	C, G	DAL2,IRC2,TEC
M8340108^4532%&	45,300		C,H,K,M,V	B, D, F	C, G	DAL2,IRC2,TEC
M8340108^4592%&	45,900		C,H,K,M,V	B, D	C, G	DAL2,IRC2,TEC
M8340108^4642%&	46,400	See PN Ordering Section	C,H,K,M,V	B, D, F	C, G	DAL2,IRC2,TEC
M8340108^4702%&	47,000		C,H,K,M,V	B, D, G, J	C, G	DAL2,IRC2,TEC
M8340108^4752%&	47,500		C,H,K,M,V	B, D, F	C, G	DAL2,IRC2,TEC
M8340108^4812%&	48,100		C,H,K,M,V	B, D	C, G	DAL2,IRC2,TEC
M8340108^4872%&	48,700		C,H,K,M,V	B, D, F	C, G	DAL2,IRC2,TEC

	Resistance	Power	Char.	Res.		
Part Number	Value (Ohms)	Rating	(^)	Tolerance	Schematic	Manufacturer
M8340108^4932%&	49,300	See PN Ordering Section	C,H,K,M,V	B, D	C, G	DAL2,IRC2,TEC
M8340108^4992%&	49,900		C,H,K,M,V	B, D, F	C, G	DAL2,IRC2,TEC
M8340108^5052%&	50,500		C,H,K,M,V	B, D	C, G	DAL2,IRC2,TEC
M8340108^5102%&	51,000		C,H,K,M,V	G, J	C, G	DAL2,IRC2,TEC
M8340108^5112%&	51,100		C,H,K,M,V	B, D, F	C, G	DAL2,IRC2,TEC
M8340108^5172%&	51,700	See PN Ordering Section	C,H,K,M,V	B, D	C, G	DAL2,IRC2,TEC
M8340108^5232%&	52,300		C,H,K,M,V	B, D, F	C, G	DAL2,IRC2,TEC
M8340108^5302%&	53,000		C,H,K,M,V	B, D	C, G	DAL2,IRC2,TEC
M8340108^5362%&	53,600		C,H,K,M,V	B, D, F	C, G	DAL2,IRC2,TEC
M8340108^5422%&	54,200		C,H,K,M,V	B, D	C, G	DAL2,IRC2,TEC
M8340108^5492%&	54,900	See PN Ordering Section	C,H,K,M,V	B, D, F	C, G	DAL2,IRC2,TEC
M8340108^5562%&	55,600		C,H,K,M,V	B, D	C, G	DAL2,IRC2,TEC
M8340108^5602%&	56,000		C,H,K,M,V	G, J	C, G	DAL2,IRC2,TEC
M8340108^5622%&	56,200		C,H,K,M,V	B, D, F	C, G	DAL2,IRC2,TEC
	Resistance	Power	Char.	Res.		
Part Number	Value (Ohms)	Rating	(^)	Tolerance	Schematic	Manufacturer
M8340108^5692%&	56,900		C,H,K,M,V	B, D	C, G	DAL2,IRC2,TEC
M8340108^5762%&	57,600	See PN Ordering Section	C,H,K,M,V	B, D, F	C, G	DAL2,IRC2,TEC
M8340108^5832%&	58,300		C,H,K,M,V	B, D	C, G	DAL2,IRC2,TEC
M8340108^5902%&	59,000		C,H,K,M,V	B, D, F	C, G	DAL2,IRC2,TEC
M8340108^5972%&	59,700		C,H,K,M,V	B, D	C, G	DAL2,IRC2,TEC
M8340108^6042%&	60,400		C,H,K,M,V	B, D, F	C, G	DAL2,IRC2,TEC
M8340108^6122%&	61,200	See PN Ordering Section	C,H,K,M,V	B, D	C, G	DAL2,IRC2,TEC
M8340108^6192%&	61,900		C,H,K,M,V	B, D, F	C, G	DAL2,IRC2,TEC
M8340108^6202%&	62,000		C,H,K,M,V	G, J	C, G	DAL2,IRC2,TEC
M8340108^6262%&	62,600		C,H,K,M,V	B, D	C, G	DAL2,IRC2,TEC
M8340108^6342%&	63,400		C,H,K,M,V	B, D, F	C, G	DAL2,IRC2,TEC
M8340108^6422%&	64,200	See PN Ordering Section	C,H,K,M,V	B, D	C, G	DAL2,IRC2,TEC
M8340108^6492%&	64,900		C,H,K,M,V	B, D, F	C, G	DAL2,IRC2,TEC
M8340108^6572%&	65,700		C,H,K,M,V	B, D	C, G	DAL2,IRC2,TEC
	Resistance	Power	Char.	Res.		
Part Number	Value (Ohms)	Rating	(^)	Tolerance	Schematic	Manufacturer
M8340108^6652%&	66,500		C,H,K,M,V	B, D, F	C, G	DAL2,IRC2,TEC
M8340108^6732%&	67,300		C,H,K,M,V	B, D	C, G	DAL2,IRC2,TEC
M8340108^6802%&	68,000	See PN Ordering Section	C,H,K,M,V	G, J	C, G	DAL2,IRC2,TEC
M8340108^6812%&	68,100		C,H,K,M,V	B, D, F	C, G	DAL2,IRC2,TEC
M8340108^6902%&	69,000		C,H,K,M,V	B, D	C, G	DAL2,IRC2,TEC
M8340108^6982%&	69,800		C,H,K,M,V	B, D, F	C, G	DAL2,IRC2,TEC
M8340108^7062%&	70,600		C,H,K,M,V	B, D	C, G	DAL2,IRC2,TEC
M8340108^7152%&	71,500	See PN Ordering Section	C,H,K,M,V	B, D, F	C, G	DAL2,IRC2,TEC
M8340108^7232%&	72,300		C,H,K,M,V	B, D	C, G	DAL2,IRC2,TEC
M8340108^7322%&	73,200		C,H,K,M,V	B, D, F	C, G	DAL2,IRC2,TEC
M8340108^7412%&	74,100		C,H,K,M,V	B, D	C, G	DAL2,IRC2,TEC
M8340108^7502%&	75,000		C,H,K,M,V	B, D, F, G, J	C, G	DAL2,IRC2,TEC
M8340108^7592%&	75,900	See PN Ordering Section	C,H,K,M,V	B, D	C, G	DAL2,IRC2,TEC

M8340108^7682%&	76,800		C,H,K,M,V	B, D, F	C, G	DAL2,IRC2,TEC
	Resistance	Power	Char.	Res.		
Part Number	Value (Ohms)	Rating	(^)	Tolerance	Schematic	Manufacturer
M8340108^7772%&	77,700		C,H,K,M,V	B, D	C, G	DAL2,IRC2,TEC
M8340108^7872%&	78,700		C,H,K,M,V	B, D, F	C, G	DAL2,IRC2,TEC
M8340108^7962%&	79,600		C,H,K,M,V	B, D	C, G	DAL2,IRC2,TEC
M8340108^8062%&	80,600	See PN Ordering Section	C,H,K,M,V	B, D, F	C, G	DAL2,IRC2,TEC
M8340108^8162%&	81,600		C,H,K,M,V	B, D	C, G	DAL2,IRC2,TEC
M8340108^8202%&	82,000		C,H,K,M,V	G, J	C, G	DAL2,IRC2,TEC
M8340108^8252%&	82,500		C,H,K,M,V	B, D, F	C, G	DAL2,IRC2,TEC
M8340108^8352%&	83,500		C,H,K,M,V	B, D	C, G	DAL2,IRC2,TEC
M8340108^8452%&	84,500	See PN Ordering Section	C,H,K,M,V	B, D, F	C, G	DAL2,IRC2,TEC
M8340108^8562%&	85,600		C,H,K,M,V	B, D	C, G	DAL2,IRC2,TEC
M8340108^8662%&	86,600		C,H,K,M,V	B, D, F	C, G	DAL2,IRC2,TEC
M8340108^8762%&	87,600		C,H,K,M,V	B, D	C, G	DAL2,IRC2,TEC
M8340108^8872%&	88,700		C,H,K,M,V	B, D, F	C, G	DAL2,IRC2,TEC
M8340108^8982%&	89,800	See PN Ordering Section	C,H,K,M,V	B, D	C, G	DAL2,IRC2,TEC
	Resistance	Power	Char.	Res.		
Part Number	Value (Ohms)	Rating	(^)	Tolerance	Schematic	Manufacturer
M8340108^9092%&	90,900		C,H,K,M,V	B, D, F	C, G	DAL2,IRC2,TEC
M8340108^9102%&	91,000		C,H,K,M,V	G, J	C, G	DAL2,IRC2,TEC
M8340108^9202%&	92,000		C,H,K,M,V	B, D	C, G	DAL2,IRC2,TEC
M8340108^9312%&	93,100		C,H,K,M,V	B, D, F	C, G	DAL2,IRC2,TEC
M8340108^9422%&	94,200	See PN Ordering Section	C,H,K,M,V	B, D	C, G	DAL2,IRC2,TEC
M8340108^9532%&	95,300		C,H,K,M,V	B, D, F	C, G	DAL2,IRC2,TEC
M8340108^9652%&	96,500		C,H,K,M,V	B, D	C, G	DAL2,IRC2,TEC
M8340108^9762%&	97,600		C,H,K,M,V	B, D, F	C, G	DAL2,IRC2,TEC
M8340108^9882%&	98,800		C,H,K,M,V	B, D	C, G	DAL2,IRC2,TEC

MIL-PRF-83401/8 (RZ080) Film Resistor Networks: 100,000 Ohms Through 1,000,000 Ohms

	Resistance	Power	Char.	Res.		
Part Number	Value (Ohms)	Rating	(^)	Tolerance	Schematic	Manufacturer
M8340108^1003%&	100,000	See PN Ordering Section	C,H,K,M,V	B, D, F, G, J	C, G	DAL2,IRC2,TEC
M8340108^1023%&	102,000		C,H,K,M,V	F	C, G	DAL2
M8340108^1053%&	105,000		C,H,K,M,V	F	C, G	DAL2
M8340108^1073%&	107,000		C,H,K,M,V	F	C, G	DAL2
M8340108^1103%&	110,000		C,H,K,M,V	F, G, J	C, G	DAL2
M8340108^1133%&	113,000	See PN Ordering Section	C,H,K,M,V	F	C, G	DAL2
M8340108^1153%&	115,000		C,H,K,M,V	F	C, G	DAL2
M8340108^1183%&	118,000		C,H,K,M,V	F	C, G	DAL2
M8340108^1203%&	120,000	See PN Ordering Section	C,H,K,M,V	F, G, J	C, G	DAL2
M8340108^1213%&	121,000		C,H,K,M,V	F	C, G	DAL2
M8340108^1243%&	124,000		C,H,K,M,V	F	C, G	DAL2
M8340108^1273%&	127,000	See PN Ordering Section	C,H,K,M,V	F	C, G	DAL2

M8340108^1303%&	130,000		C,H,K,M,V	F, G, J	C, G	DAL2
M8340108^1333%&	133,000		C,H,K,M,V	F	C, G	DAL2
	Resistance	Power	Char.	Res.		
Part Number	Value (Ohms)	Rating	(^)	Tolerance	Schematic	Manufacturer
M8340108^1373%&	137,000		C,H,K,M,V	F	C, G	DAL2
M8340108^1403%&	140,000		C,H,K,M,V	F	C, G	DAL2
M8340108^1433%&	143,000	See PN Ordering Section	C,H,K,M,V	F	C, G	DAL2
M8340108^1473%&	147,000		C,H,K,M,V	F	C, G	DAL2
M8340108^1503%&	150,000		C,H,K,M,V	F, G, J	C, G	DAL2
M8340108^1543%&	154,000		C,H,K,M,V	F	C, G	DAL2
M8340108^1583%&	158,000		C,H,K,M,V	F	C, G	DAL2
M8340108^1603%&	160,000		C,H,K,M,V	G, J	C, G	DAL2
M8340108^1623%&	162,000	See PN Ordering Section	C,H,K,M,V	F	C, G	DAL2
M8340108^1653%&	165,000		C,H,K,M,V	F	C, G	DAL2
M8340108^1693%&	169,000		C,H,K,M,V	F	C, G	DAL2
M8340108^1743%&	174,000		C,H,K,M,V	F	C, G	DAL2
M8340108^1783%&	178,000		C,H,K,M,V	F	C, G	DAL2
M8340108^1803%&	180,000		C,H,K,M,V	G, J	C, G	DAL2
	Resistance	Power	Char.	Res.		
Part Number	Value (Ohms)	Rating	(^)	Tolerance	Schematic	Manufacturer
M8340108^1823%&	182,000	See PN Ordering Section	C,H,K,M,V	F	C, G	DAL2
M8340108^1873%&	187,000		C,H,K,M,V	F	C, G	DAL2
M8340108^1913%&	191,000		C,H,K,M,V	F	C, G	DAL2
M8340108^1963%&	196,000		C,H,K,M,V	F	C, G	DAL2
M8340108^2003%&	200,000		C,H,K,M,V	F, G, J	C, G	DAL2
M8340108^2053%&	205,000	See PN Ordering Section	C,H,K,M,V	F	C, G	DAL2
M8340108^2103%&	210,000		C,H,K,M,V	F	C, G	DAL2
M8340108^2153%&	215,000		C,H,K,M,V	F	C, G	DAL2
M8340108^2183%&	218,000	See PN Ordering Section	C,H,K,M,V		C, G	DAL2
M8340108^2203%&	220,000		C,H,K,M,V	G, J	C, G	DAL2
M8340108^2213%&	221,000		C,H,K,M,V	F	C, G	DAL2
M8340108^2263%&	226,000		C,H,K,M,V	F	C, G	DAL2
M8340108^2323%&	232,000		C,H,K,M,V	F	C, G	DAL2
M8340108^2373%&	237,000		C,H,K,M,V	F	C, G	DAL2
	Resistance	Power	Char.	Res.		
Part Number	Value (Ohms)	Rating	(^)	Tolerance	Schematic	Manufacturer
M8340108^2403%&	240,000		C,H,K,M,V	F, G, J	C, G	DAL2
M8340108^2433%&	243,000	See PN Ordering Section	C,H,K,M,V	F	C, G	DAL2
M8340108^2493%&	249,000		C,H,K,M,V	F	C, G	DAL2
M8340108^2553%&	255,000		C,H,K,M,V	F	C, G	DAL2
M8340108^2613%&	261,000		C,H,K,M,V	F	C, G	DAL2
M8340108^2673%&	267,000		C,H,K,M,V	F	C, G	DAL2
M8340108^2703%&	270,000		C,H,K,M,V	G, J	C, G	DAL2
M8340108^2743%&	274,000		C,H,K,M,V	F	C, G	DAL2
M8340108^2803%&	280,000		C,H,K,M,V	F	C, G	DAL2
M8340108^2873%&	287,000	See PN Ordering Section	C,H,K,M,V	F	C, G	DAL2
M8340108^2943%&	294,000		C,H,K,M,V	F	C, G	DAL2

M8340108^3003%&	300,000		C,H,K,M,V	G, J	C, G	DAL2
M8340108^3013%&	301,000	See PN Ordering Section	C,H,K,M,V	F	C, G	DAL2
M8340108^3093%&	309,000		C,H,K,M,V	F	C, G	DAL2
	Resistance	Power	Char.	Res.		
Part Number	Value (Ohms)	Rating	(^)	Tolerance	Schematic	Manufacturer
M8340108^3163%&	316,000		C,H,K,M,V	F	C, G	DAL2
M8340108^3243%&	324,000		C,H,K,M,V	F	C, G	DAL2
M8340108^3303%&	330,000		C,H,K,M,V	G, J	C, G	DAL2
M8340108^3323%&	332,000		C,H,K,M,V	F	C, G	DAL2
M8340108^3403%&	340,000		C,H,K,M,V	F	C, G	DAL2
M8340108^3483%&	348,000		C,H,K,M,V	F	C, G	DAL2
M8340108^3573%&	357,000	See PN Ordering Section	C,H,K,M,V	F	C, G	DAL2
M8340108^3603%&	360,000		C,H,K,M,V	G, J	C, G	DAL2
M8340108^3653%&	365,000		C,H,K,M,V	F	C, G	DAL2
M8340108^3743%&	374,000	See PN Ordering Section	C,H,K,M,V	F	C, G	DAL2
M8340108^3833%&	383,000		C,H,K,M,V	F	C, G	DAL2
M8340108^3903%&	390,000		C,H,K,M,V	G, J	C, G	DAL2
M8340108^3923%&	392,000	See PN Ordering Section	C,H,K,M,V	F	C, G	DAL2
M8340108^4023%&	402,000		C,H,K,M,V	F	C, G	DAL2
	Resistance	Power	Char.	Res.		
Part Number	Value (Ohms)	Rating	(^)	Tolerance	Schematic	Manufacturer
M8340108^4123%&	412,000		C,H,K,M,V	F	C, G	DAL2
M8340108^4223%&	422,000		C,H,K,M,V	F	C, G	DAL2
M8340108^4303%&	430,000		C,H,K,M,V	G, J	C, G	DAL2
M8340108^4323%&	432,000		C,H,K,M,V	F	C, G	DAL2
M8340108^4423%&	442,000		C,H,K,M,V	F	C, G	DAL2
M8340108^4533%&	453,000		C,H,K,M,V	F	C, G	DAL2
M8340108^4643%&	464,000	See PN Ordering Section	C,H,K,M,V	F	C, G	DAL2
M8340108^4703%&	470,000		C,H,K,M,V	G, J	C, G	DAL2
M8340108^4753%&	475,000		C,H,K,M,V	F	C, G	DAL2
M8340108^4873%&	487,000		C,H,K,M,V	F	C, G	DAL2
M8340108^4993%&	499,000		C,H,K,M,V	F	C, G	DAL2
M8340108^5103%&	510,000		C,H,K,M,V	G, J	C, G	DAL2
M8340108^5113%&	511,000		C,H,K,M,V	F	C, G	DAL2
M8340108^5233%&	523,000		C,H,K,M,V	F	C, G	DAL2
	Resistance	Power	Char.	Res.		
Part Number	Value (Ohms)	Rating	(^)	Tolerance	Schematic	Manufacturer
M8340108^5363%&	536,000		C,H,K,M,V	F	C, G	DAL2
M8340108^5493%&	549,000	See PN Ordering Section	C,H,K,M,V	F	C, G	DAL2
M8340108^5603%&	560,000		C,H,K,M,V	G, J	C, G	DAL2
M8340108^5623%&	562,000		C,H,K,M,V	F	C, G	DAL2
M8340108^5763%&	576,000	See PN Ordering Section	C,H,K,M,V	F	C, G	DAL2
M8340108^5903%&	590,000		C,H,K,M,V	F	C, G	DAL2
M8340108^6043%&	604,000		C,H,K,M,V	F	C, G	DAL2
M8340108^6193%&	619,000		C,H,K,M,V	F	C, G	DAL2
M8340108^6203%&	620,000		C,H,K,M,V	G, J	C, G	DAL2
M8340108^6343%&	634,000		C,H,K,M,V	F	C, G	DAL2

M8340108^6493%&	649,000		C,H,K,M,V	F	C, G	DAL2
M8340108^6653%&	665,000		C,H,K,M,V	F	C, G	DAL2
M8340108^6803%&	680,000	See PN Ordering Section	C,H,K,M,V	G, J	C, G	DAL2
M8340108^6813%&	681,000		C,H,K,M,V	F	C, G	DAL2
	Resistance	Power	Char.	Res.		
Part Number	Value (Ohms)	Rating	(^)	Tolerance	Schematic	Manufacturer
M8340108^6983%&	698,000		C,H,K,M,V	F	C, G	DAL2
M8340108^7153%&	715,000	See PN Ordering Section	C,H,K,M,V	F	C, G	DAL2
M8340108^7323%&	732,000		C,H,K,M,V	F	C, G	DAL2
M8340108^7503%&	750,000		C,H,K,M,V	F, G, J	C, G	DAL2
M8340108^7683%&	768,000		C,H,K,M,V	F	C, G	DAL2
M8340108^7873%&	787,000		C,H,K,M,V	F	C, G	DAL2
M8340108^8063%&	806,000	See PN Ordering Section	C,H,K,M,V	F	C, G	DAL2
M8340108^8203%&	820,000		C,H,K,M,V	G, J	C, G	DAL2
M8340108^8253%&	825,000		C,H,K,M,V	F	C, G	DAL2
M8340108^8453%&	845,000	See PN Ordering Section	C,H,K,M,V	F	C, G	DAL2
M8340108^8663%&	866,000		C,H,K,M,V	F	C, G	DAL2
M8340108^8873%&	887,000		C,H,K,M,V	F	C, G	DAL2
M8340108^9093%&	909,000		C,H,K,M,V	F	C, G	DAL2
M8340108^9103%&	910,000		C,H,K,M,V	G, J	C, G	DAL2
	Resistance	Power	Char.	Res.		
Part Number	Value (Ohms)	Rating	(^)	Tolerance	Schematic	Manufacturer
M8340108^9313%&	931,000		C,H,K,M,V	F	C, G	DAL2
M8340108^9533%&	953,000		C,H,K,M,V	F	C, G	DAL2
M8340108^9763%&	976,000		C,H,K,M,V	F	C, G	DAL2
M8340108^1004%&	1,000,000	See PN Ordering Section	C,H,K,M,V	F, G, J	C, G	DAL2

MIL-PRF-83401/9 (RZ090) Film Resistor Networks

10.0 Ohms Through 1,000,000 Ohms

	Resistance	Power	Char.	Res.		
Part Number	Value (Ohms)	Rating	(^)	Tolerance	Schematic	Manufacturer
M8340109^10R0%&	10.0	Link at Top	C,H,K,M,V	F, G, J	C, G	DAL2
M8340109^10R2%&	10.2		C,H,K,M,V	F	C, G	DAL2
M8340109^10R5%&	10.5		C,H,K,M,V	F	C, G	DAL2
M8340109^10R7%&	10.7		C,H,K,M,V	F	C, G	DAL2
M8340109^11R0%&	11.0		C,H,K,M,V	F, G, J	C, G	DAL2
M8340109^11R3%&	11.3	Link at Top	C,H,K,M,V	F	C, G	DAL2
M8340109^11R5%&	11.5		C,H,K,M,V	F	C, G	DAL2
M8340109^11R8%&	11.8		C,H,K,M,V	F	C, G	DAL2
M8340109^12R0%&	12.0		C,H,K,M,V	F, G, J	C, G	DAL2
M8340109^12R1%&	12.1		C,H,K,M,V	F	C, G	DAL2
M8340109^12R4%&	12.4	Link at Top	C,H,K,M,V	F	C, G	DAL2
M8340109^12R7%&	12.7		C,H,K,M,V	F	C, G	DAL2
M8340109^13R0%&	13.0		C,H,K,M,V	F, G, J	C, G	DAL2

M8340109^13R3%&	13.3		C,H,K,M,V	F	C, G	DAL2
M8340109^13R7%&	13.7		C,H,K,M,V	F	C, G	DAL2
M8340109^14R0%&	14.0	Link at Top	C,H,K,M,V	F	C, G	DAL2
M8340109^14R3%&	14.3		C,H,K,M,V	F	C, G	DAL2
M8340109^14R7%&	14.7		C,H,K,M,V	F	C, G	DAL2
M8340109^15R0%&	15.0		C,H,K,M,V	F, G, J	C, G	DAL2
M8340109^15R4%&	15.4		C,H,K,M,V	F	C, G	DAL2
M8340109^15R8%&	15.8	Link at Top	C,H,K,M,V	F	C, G	DAL2
M8340109^16R0%&	16.0		C,H,K,M,V	G, J	C, G	DAL2
M8340109^16R2%&	16.2		C,H,K,M,V	F	C, G	DAL2
M8340109^16R5%&	16.5		C,H,K,M,V	F	C, G	DAL2
M8340109^16R9%&	16.9		C,H,K,M,V	F	C, G	DAL2
M8340109^17R4%&	17.4	Link at Top	C,H,K,M,V	F	C, G	DAL2
M8340109^17R8%&	17.8		C,H,K,M,V	F	C, G	DAL2
M8340109^18R0%&	18.0		C,H,K,M,V	G, J	C, G	DAL2
M8340109^18R2%&	18.2		C,H,K,M,V	F	C, G	DAL2
M8340109^18R7%&	18.7		C,H,K,M,V	F	C, G	DAL2
M8340109^19R1%&	19.1	Link at Top	C,H,K,M,V	F	C, G	DAL2
M8340109^19R6%&	19.6		C,H,K,M,V	F	C, G	DAL2
M8340109^20R0%&	20.0		C,H,K,M,V	F, G, J	C, G	DAL2
M8340109^20R5%&	20.5		C,H,K,M,V	F	C, G	DAL2
M8340109^21R0%&	21.0		C,H,K,M,V	F	C, G	DAL2
M8340109^21R5%&	21.5	Link at Top	C,H,K,M,V	F	C, G	DAL2
M8340109^22R0%&	22.0		C,H,K,M,V	G, J	C, G	DAL2
M8340109^22R1%&	22.1		C,H,K,M,V	F	C, G	DAL2
M8340109^22R6%&	22.6		C,H,K,M,V	F	C, G	DAL2
M8340109^23R2%&	23.2		C,H,K,M,V	F	C, G	DAL2
M8340109^23R7%&	23.7	Link at Top	C,H,K,M,V	F	C, G	DAL2
M8340109^24R0%&	24.0		C,H,K,M,V	F, G, J	C, G	DAL2
M8340109^24R3%&	24.3		C,H,K,M,V	F	C, G	DAL2
M8340109^24R9%&	24.9		C,H,K,M,V	F	C, G	DAL2
M8340109^25R5%&	25.5		C,H,K,M,V	F	C, G	DAL2
M8340109^26R1%&	26.1	Link at Top	C,H,K,M,V	F	C, G	DAL2
M8340109^26R7%&	26.7		C,H,K,M,V	F	C, G	DAL2
M8340109^27R0%&	27.0		C,H,K,M,V	G, J	C, G	DAL2,TEC
M8340109^27R4%&	27.4		C,H,K,M,V	F	C, G	DAL2,TEC
M8340109^28R0%&	28.0		C,H,K,M,V	F	C, G	DAL2,TEC
M8340109^28R7%&	28.7	Link at Top	C,H,K,M,V	F	C, G	DAL2,TEC
M8340109^29R4%&	29.4		C,H,K,M,V	F	C, G	DAL2,TEC
M8340109^30R0%&	30.0		C,H,K,M,V	G, J	C, G	DAL2,TEC
M8340109^30R1%&	30.1		C,H,K,M,V	F	C, G	DAL2,TEC
M8340109^30R9%&	30.9		C,H,K,M,V	F	C, G	DAL2,TEC
M8340109^31R6%&	31.6	Link at Top	C,H,K,M,V	F	C, G	DAL2,TEC
M8340109^32R4%&	32.4		C,H,K,M,V	F	C, G	DAL2,TEC
M8340109^33R0%&	33.0		C,H,K,M,V	G, J	C, G	DAL2,TEC
M8340109^33R2%&	33.2		C,H,K,M,V	F	C, G	DAL2,TEC
M8340109^34R0%&	34.0		C,H,K,M,V	F	C, G	DAL2,TEC

M8340109^34R8%&	34.8	Link at Top	C,H,K,M,V	F	C, G	DAL2,TEC
M8340109^35R7%&	35.7		C,H,K,M,V	F	C, G	DAL2,TEC
M8340109^36R0%&	36.0		C,H,K,M,V	G, J	C, G	DAL2,TEC
M8340109^36R5%&	36.5		C,H,K,M,V	F	C, G	DAL2,TEC
M8340109^37R4%&	37.4		C,H,K,M,V	F	C, G	DAL2,TEC
M8340109^38R3%&	38.3	Link at Top	C,H,K,M,V	F	C, G	DAL2,TEC
M8340109^39R0%&	39.0		C,H,K,M,V	G, J	C, G	DAL2,TEC
M8340109^39R2%&	39.2		C,H,K,M,V	F	C, G	DAL2,TEC
M8340109^40R2%&	40.2		C,H,K,M,V	F	C, G	DAL2,TEC
M8340109^41R2%&	41.2		C,H,K,M,V	F	C, G	DAL2,TEC
M8340109^42R2%&	42.2	Link at Top	C,H,K,M,V	F	C, G	DAL2,TEC
M8340109^43R0%&	43.0		C,H,K,M,V	G, J	C, G	DAL2,TEC
M8340109^43R2%&	43.2		C,H,K,M,V	F	C, G	DAL2,TEC
M8340109^44R2%&	44.2		C,H,K,M,V	F	C, G	DAL2,TEC
M8340109^45R3%&	45.3		C,H,K,M,V	F	C, G	DAL2,TEC
M8340109^46R4%&	46.4	Link at Top	C,H,K,M,V	F	C, G	DAL2,TEC
M8340109^47R0%&	47.0		C,H,K,M,V	G, J	C, G	DAL2,TEC
M8340109^47R5%&	47.5		C,H,K,M,V	F	C, G	DAL2,TEC
M8340109^48R7%&	48.7		C,H,K,M,V	F	C, G	DAL2,TEC
M8340109^49R9%&	49.9		C,H,K,M,V	F	C, G	DAL2,TEC
M8340109^51R0%&	51.0	Link at Top	C,H,K,M,V	G, J	C, G	DAL2,TEC
M8340109^51R1%&	51.1		C,H,K,M,V	F	C, G	DAL2,TEC
M8340109^52R3%&	52.3		C,H,K,M,V	F	C, G	DAL2,TEC
M8340109^53R6%&	53.6		C,H,K,M,V	F	C, G	DAL2,TEC
M8340109^54R9%&	54.9		C,H,K,M,V	F	C, G	DAL2,TEC
M8340109^56R0%&	56.0	Link at Top	C,H,K,M,V	G, J	C, G	DAL2,TEC
M8340109^56R2%&	56.2		C,H,K,M,V	F	C, G	DAL2,TEC
M8340109^57R6%&	57.6		C,H,K,M,V	F	C, G	DAL2,TEC
M8340109^59R0%&	59.0		C,H,K,M,V	F	C, G	DAL2,TEC
M8340109^60R4%&	60.4		C,H,K,M,V	F	C, G	DAL2,TEC
M8340109^61R9%&	61.9	Link at Top	C,H,K,M,V	F	C, G	DAL2,TEC
M8340109^62R0%&	62.0		C,H,K,M,V	G, J	C, G	DAL2,TEC
M8340109^63R4%&	63.4		C,H,K,M,V	F	C, G	DAL2,TEC
M8340109^64R9%&	64.9		C,H,K,M,V	F	C, G	DAL2,TEC
M8340109^66R5%&	66.5		C,H,K,M,V	F	C, G	DAL2,TEC
M8340109^68R0%&	68.0	Link at Top	C,H,K,M,V	G, J	C, G	DAL2,TEC
M8340109^68R1%&	68.1		C,H,K,M,V	F	C, G	DAL2,TEC
M8340109^69R8%&	69.8		C,H,K,M,V	F	C, G	DAL2,TEC
M8340109^71R5%&	71.5		C,H,K,M,V	F	C, G	DAL2,TEC
M8340109^73R2%&	73.2		C,H,K,M,V	F	C, G	DAL2,TEC
M8340109^75R0%&	75.0	Link at Top	C,H,K,M,V	F, G, J	C, G	DAL2,TEC
M8340109^76R8%&	76.8		C,H,K,M,V	F	C, G	DAL2,TEC
M8340109^78R7%&	78.7		C,H,K,M,V	F	C, G	DAL2,TEC
M8340109^80R6%&	80.6		C,H,K,M,V	F	C, G	DAL2,TEC
M8340109^82R0%&	82.0		C,H,K,M,V	G, J	C, G	DAL2,TEC
M8340109^82R5%&	82.5	Link at Top	C,H,K,M,V	F	C, G	DAL2,TEC
M8340109^84R5%&	84.5		C,H,K,M,V	F	C, G	DAL2,TEC

M8340109^86R6%&	86.6		C,H,K,M,V	F	C, G	DAL2,TEC
M8340109^88R7%&	88.7		C,H,K,M,V	F	C, G	DAL2,TEC
M8340109^90R9%&	90.9		C,H,K,M,V	F	C, G	DAL2,TEC
M8340109^91R0%&	91.0	Link at Top	C,H,K,M,V	G, J	C, G	DAL2,TEC
M8340109^93R1%&	93.1		C,H,K,M,V	F	C, G	DAL2,TEC
M8340109^95R3%&	95.3		C,H,K,M,V	F	C, G	DAL2,TEC
M8340109^97R6%&	97.6		C,H,K,M,V	F	C, G	DAL2,TEC
M8340109^1000%&	100		C,H,K,M,V	B, D, F, G, J	C, G	DAL2,IRC2,TEC
M8340109^1010%&	101	Link at Top	C,H,K,M,V	B, D	C, G	DAL2,IRC2,TEC
M8340109^1020%&	102		C,H,K,M,V	B, D, F	C, G	DAL2,IRC2,TEC
M8340109^1040%&	104		C,H,K,M,V	B, D	C, G	DAL2,IRC2,TEC
M8340109^1050%&	105		C,H,K,M,V	B, D, F	C, G	DAL2,IRC2,TEC
M8340109^1060%&	106		C,H,K,M,V	B, D	C, G	DAL2,IRC2,TEC
M8340109^1070%&	107	Link at Top	C,H,K,M,V	B, D, F	C, G	DAL2,IRC2,TEC
M8340109^1090%&	109		C,H,K,M,V	B, D	C, G	DAL2,IRC2,TEC
M8340109^1100%&	110		C,H,K,M,V	B, D, F, G, J	C, G	DAL2,IRC2,TEC
M8340109^1110%&	111		C,H,K,M,V	B, D	C, G	DAL2,IRC2,TEC
M8340109^1130%&	113		C,H,K,M,V	B, D, F	C, G	DAL2,IRC2,TEC
M8340109^1140%&	114	Link at Top	C,H,K,M,V	B, D	C, G	DAL2,IRC2,TEC
M8340109^1150%&	115		C,H,K,M,V	B, D, F	C, G	DAL2,IRC2,TEC
M8340109^1170%&	117		C,H,K,M,V	B, D	C, G	DAL2,IRC2,TEC
M8340109^1180%&	118		C,H,K,M,V	B, D, F	C, G	DAL2,IRC2,TEC
M8340109^1200%&	120		C,H,K,M,V	B, D, F, G, J	C, G	DAL2,IRC2,TEC
M8340109^1210%&	121	Link at Top	C,H,K,M,V	B, D, F	C, G	DAL2,IRC2,TEC
M8340109^1230%&	123		C,H,K,M,V	B, D	C, G	DAL2,IRC2,TEC
M8340109^1240%&	124		C,H,K,M,V	B, D, F	C, G	DAL2,IRC2,TEC
M8340109^1260%&	126		C,H,K,M,V	B, D	C, G	DAL2,IRC2,TEC
M8340109^1270%&	127		C,H,K,M,V	B, D, F	C, G	DAL2,IRC2,TEC
M8340109^1290%&	129	Link at Top	C,H,K,M,V	B, D	C, G	DAL2,IRC2,TEC
M8340109^1300%&	130		C,H,K,M,V	B, D, F, G, J	C, G	DAL2,IRC2,TEC
M8340109^1320%&	132		C,H,K,M,V	B, D	C, G	DAL2,IRC2,TEC
M8340109^1330%&	133		C,H,K,M,V	B, D, F	C, G	DAL2,IRC2,TEC
M8340109^1350%&	135	Link at Top	C,H,K,M,V	B, D	C, G	DAL2,IRC2,TEC
M8340109^1370%&	137		C,H,K,M,V	B, D, F	C, G	DAL2,IRC2,TEC
M8340109^1380%&	138		C,H,K,M,V	B, D	C, G	DAL2,IRC2,TEC
M8340109^1400%&	140		C,H,K,M,V	B, D, F	C, G	DAL2,IRC2,TEC
M8340109^1420%&	142		C,H,K,M,V	B, D	C, G	DAL2,IRC2,TEC
M8340109^1430%&	143	Link at Top	C,H,K,M,V	B, D, F	C, G	DAL2,IRC2,TEC
M8340109^1450%&	145		C,H,K,M,V	B, D	C, G	DAL2,IRC2,TEC
M8340109^1470%&	147		C,H,K,M,V	B, D, F	C, G	DAL2,IRC2,TEC
M8340109^1490%&	149		C,H,K,M,V	B, D	C, G	DAL2,IRC2,TEC
M8340109^1500%&	150		C,H,K,M,V	B, D, F, G, J	C, G	DAL2,IRC2,TEC
M8340109^1520%&	152	Link at Top	C,H,K,M,V	B, D	C, G	DAL2,IRC2,TEC
M8340109^1540%&	154		C,H,K,M,V	B, D, F	C, G	DAL2,IRC2,TEC
M8340109^1560%&	156		C,H,K,M,V	B, D	C, G	DAL2,IRC2,TEC
M8340109^1580%&	158		C,H,K,M,V	B, D, F	C, G	DAL2,IRC2,TEC
M8340109^1600%&	160		C,H,K,M,V	B, D, G, J	C, G	DAL2,IRC2,TEC

M8340109^1620%&	162	Link at Top	C,H,K,M,V	B, D, F	C, G	DAL2,IRC2,TEC
M8340109^1640%&	164		C,H,K,M,V	B, D	C, G	DAL2,IRC2,TEC
M8340109^1650%&	165		C,H,K,M,V	B, D, F	C, G	DAL2,IRC2,TEC
M8340109^1670%&	167		C,H,K,M,V	B, D	C, G	DAL2,IRC2,TEC
M8340109^1690%&	169		C,H,K,M,V	B, D, F	C, G	DAL2,IRC2,TEC
M8340109^1720%&	172	Link at Top	C,H,K,M,V	B, D	C, G	DAL2,IRC2,TEC
M8340109^1740%&	174		C,H,K,M,V	B, D, F	C, G	DAL2,IRC2,TEC
M8340109^1760%&	176		C,H,K,M,V	B, D	C, G	DAL2,IRC2,TEC
M8340109^1780%&	178		C,H,K,M,V	B, D, F	C, G	DAL2,IRC2,TEC
M8340109^1800%&	180		C,H,K,M,V	B, D, G, J	C, G	DAL2,IRC2,TEC
M8340109^1820%&	182	Link at Top	C,H,K,M,V	B, D, F	C, G	DAL2,IRC2,TEC
M8340109^1840%&	184		C,H,K,M,V	B, D	C, G	DAL2,IRC2,TEC
M8340109^1870%&	187		C,H,K,M,V	B, D, F	C, G	DAL2,IRC2,TEC
M8340109^1890%&	189		C,H,K,M,V	B, D	C, G	DAL2,IRC2,TEC
M8340109^1910%&	191		C,H,K,M,V	B, D, F	C, G	DAL2,IRC2,TEC
M8340109^1930%&	193	Link at Top	C,H,K,M,V	B, D	C, G	DAL2,IRC2,TEC
M8340109^1960%&	196		C,H,K,M,V	B, D, F	C, G	DAL2,IRC2,TEC
M8340109^1980%&	198		C,H,K,M,V	B, D	C, G	DAL2,IRC2,TEC
M8340109^2000%&	200		C,H,K,M,V	B, D, F, G, J	C, G	DAL2,IRC2,TEC
M8340109^2030%&	203		C,H,K,M,V	B, D	C, G	DAL2,IRC2,TEC
M8340109^2050%&	205	Link at Top	C,H,K,M,V	B, D, F	C, G	DAL2,IRC2,TEC
M8340109^2080%&	208		C,H,K,M,V	B, D	C, G	DAL2,IRC2,TEC
M8340109^2100%&	210		C,H,K,M,V	B, D, F	C, G	DAL2,IRC2,TEC
M8340109^2130%&	213		C,H,K,M,V	B, D	C, G	DAL2,IRC2,TEC
M8340109^2150%&	215		C,H,K,M,V	B, D, F	C, G	DAL2,IRC2,TEC
M8340109^2180%&	218	Link at Top	C,H,K,M,V	B, D	C, G	DAL2,IRC2,TEC
M8340109^2200%&	220		C,H,K,M,V	G, J	C, G	DAL2,IRC2,TEC
M8340109^2210%&	221		C,H,K,M,V	B, D, F	C, G	DAL2,IRC2,TEC
M8340109^2230%&	223		C,H,K,M,V	B, D	C, G	DAL2,IRC2,TEC
M8340109^2260%&	226		C,H,K,M,V	B, D, F	C, G	DAL2,IRC2,TEC
M8340109^2290%&	229	Link at Top	C,H,K,M,V	B, D	C, G	DAL2,IRC2,TEC
M8340109^2320%&	232		C,H,K,M,V	B, D, F	C, G	DAL2,IRC2,TEC
M8340109^2340%&	234		C,H,K,M,V	B, D	C, G	DAL2,IRC2,TEC
M8340109^2370%&	237		C,H,K,M,V	B, D, F	C, G	DAL2,IRC2,TEC
M8340109^2400%&	240		C,H,K,M,V	B, D, F, G, J	C, G	DAL2,IRC2,TEC
M8340109^2430%&	243	Link at Top	C,H,K,M,V	B, D, F	C, G	DAL2,IRC2,TEC
M8340109^2460%&	246		C,H,K,M,V	B, D	C, G	DAL2,IRC2,TEC
M8340109^2490%&	249		C,H,K,M,V	B, D, F	C, G	DAL2,IRC2,TEC
M8340109^2520%&	252		C,H,K,M,V	B, D	C, G	DAL2,IRC2,TEC
M8340109^2550%&	255		C,H,K,M,V	B, D, F	C, G	DAL2,IRC2,TEC
M8340109^2580%&	258	Link at Top	C,H,K,M,V	B, D	C, G	DAL2,IRC2,TEC
M8340109^2610%&	261		C,H,K,M,V	B, D, F	C, G	DAL2,IRC2,TEC
M8340109^2640%&	264		C,H,K,M,V	B, D	C, G	DAL2,IRC2,TEC
M8340109^2670%&	267		C,H,K,M,V	B, D, F	C, G	DAL2,IRC2,TEC
M8340109^2700%&	270		C,H,K,M,V	G, J	C, G	DAL2,IRC2,TEC
M8340109^2710%&	271	Link at Top	C,H,K,M,V	B, D	C, G	DAL2,IRC2,TEC
M8340109^2740%&	274		C,H,K,M,V	B, D, F	C, G	DAL2,IRC2,TEC

M8340109^2770%&	277		C,H,K,M,V	B, D	C, G	DAL2,IRC2,TEC
M8340109^2800%&	280		C,H,K,M,V	B, D, F	C, G	DAL2,IRC2,TEC
M8340109^2840%&	284		C,H,K,M,V	B, D	C, G	DAL2,IRC2,TEC
M8340109^2870%&	287	Link at Top	C,H,K,M,V	B, D, F	C, G	DAL2,IRC2,TEC
M8340109^2910%&	291		C,H,K,M,V	B, D	C, G	DAL2,IRC2,TEC
M8340109^2940%&	294		C,H,K,M,V	B, D, F	C, G	DAL2,IRC2,TEC
M8340109^2980%&	298		C,H,K,M,V	B, D	C, G	DAL2,IRC2,TEC
M8340109^3000%&	300		C,H,K,M,V	G, J	C, G	DAL2,IRC2,TEC
M8340109^3010%&	301	Link at Top	C,H,K,M,V	B, D, F	C, G	DAL2,IRC2,TEC
M8340109^3050%&	305		C,H,K,M,V	B, D	C, G	DAL2,IRC2,TEC
M8340109^3090%&	309		C,H,K,M,V	B, D, F	C, G	DAL2,IRC2,TEC
M8340109^3120%&	312		C,H,K,M,V	B, D	C, G	DAL2,IRC2,TEC
M8340109^3160%&	316		C,H,K,M,V	B, D, F	C, G	DAL2,IRC2,TEC
M8340109^3200%&	320	Link at Top	C,H,K,M,V	B, D	C, G	DAL2,IRC2,TEC
M8340109^3240%&	324		C,H,K,M,V	B, D, F	C, G	DAL2,IRC2,TEC
M8340109^3280%&	328		C,H,K,M,V	B, D	C, G	DAL2,IRC2,TEC
M8340109^3300%&	330		C,H,K,M,V	G, J	C, G	DAL2,IRC2,TEC
M8340109^3320%&	332		C,H,K,M,V	B, D, F	C, G	DAL2,IRC2,TEC
M8340109^3360%&	336	Link at Top	C,H,K,M,V	B, D	C, G	DAL2,IRC2,TEC
M8340109^3400%&	340		C,H,K,M,V	B, D, F	C, G	DAL2,IRC2,TEC
M8340109^3440%&	344		C,H,K,M,V	B, D	C, G	DAL2,IRC2,TEC
M8340109^3480%&	348		C,H,K,M,V	B, D, F	C, G	DAL2,IRC2,TEC
M8340109^3520%&	352		C,H,K,M,V	B, D	C, G	DAL2,IRC2,TEC
M8340109^3570%&	357	Link at Top	C,H,K,M,V	B, D, F	C, G	DAL2,IRC2,TEC
M8340109^3600%&	360		C,H,K,M,V	G, J	C, G	DAL2,IRC2,TEC
M8340109^3610%&	361		C,H,K,M,V	B, D	C, G	DAL2,IRC2,TEC
M8340109^3650%&	365		C,H,K,M,V	B, D, F	C, G	DAL2,IRC2,TEC
M8340109^3700%&	370		C,H,K,M,V	B, D	C, G	DAL2,IRC2,TEC
M8340109^3740%&	374	Link at Top	C,H,K,M,V	B, D, F	C, G	DAL2,IRC2,TEC
M8340109^3790%&	379		C,H,K,M,V	B, D	C, G	DAL2,IRC2,TEC
M8340109^3830%&	383		C,H,K,M,V	B, D, F	C, G	DAL2,IRC2,TEC
M8340109^3880%&	388		C,H,K,M,V	B, D	C, G	DAL2,IRC2,TEC
M8340109^3900%&	390		C,H,K,M,V	G, J	C, G	DAL2,IRC2,TEC
M8340109^3920%&	392	Link at Top	C,H,K,M,V	B, D, F	C, G	DAL2,IRC2,TEC
M8340109^3970%&	397		C,H,K,M,V	B, D	C, G	DAL2,IRC2,TEC
M8340109^4020%&	402		C,H,K,M,V	B, D, F	C, G	DAL2,IRC2,TEC
M8340109^4070%&	407		C,H,K,M,V	B, D	C, G	DAL2,IRC2,TEC
M8340109^4120%&	412		C,H,K,M,V	B, D, F	C, G	DAL2,IRC2,TEC
M8340109^4170%&	417	Link at Top	C,H,K,M,V	B, D	C, G	DAL2,IRC2,TEC
M8340109^4220%&	422		C,H,K,M,V	B, D, F	C, G	DAL2,IRC2,TEC
M8340109^4270%&	427		C,H,K,M,V	B, D	C, G	DAL2,IRC2,TEC
M8340109^4300%&	430		C,H,K,M,V	G, J	C, G	DAL2,IRC2,TEC
M8340109^4320%&	432		C,H,K,M,V	B, D, F	C, G	DAL2,IRC2,TEC
M8340109^4370%&	437	Link at Top	C,H,K,M,V	B, D	C, G	DAL2,IRC2,TEC
M8340109^4420%&	442		C,H,K,M,V	B, D, F	C, G	DAL2,IRC2,TEC
M8340109^4480%&	448		C,H,K,M,V	B, D	C, G	DAL2,IRC2,TEC
M8340109^4530%&	453		C,H,K,M,V	B, D, F	C, G	DAL2,IRC2,TEC

M8340109^4590%&	459		C,H,K,M,V	B, D	C, G	DAL2,IRC2,TEC
M8340109^4640%&	464	Link at Top	C,H,K,M,V	B, D, F	C, G	DAL2,IRC2,TEC
M8340109^4700%&	470		C,H,K,M,V	B, D, G, J	C, G	DAL2,IRC2,TEC
M8340109^4750%&	475		C,H,K,M,V	B, D, F	C, G	DAL2,IRC2,TEC
M8340109^4810%&	481		C,H,K,M,V	B, D	C, G	DAL2,IRC2,TEC
M8340109^4870%&	487		C,H,K,M,V	B, D, F	C, G	DAL2,IRC2,TEC
M8340109^4930%&	493	Link at Top	C,H,K,M,V	B, D	C, G	DAL2,IRC2,TEC
M8340109^4990%&	499		C,H,K,M,V	B, D, F	C, G	DAL2,IRC2,TEC
M8340109^5050%&	505		C,H,K,M,V	B, D	C, G	DAL2,IRC2,TEC
M8340109^5100%&	510		C,H,K,M,V	G, J	C, G	DAL2,IRC2,TEC
M8340109^5110%&	511		C,H,K,M,V	B, D, F	C, G	DAL2,IRC2,TEC
M8340109^5170%&	517	Link at Top	C,H,K,M,V	B, D	C, G	DAL2,IRC2,TEC
M8340109^5230%&	523		C,H,K,M,V	B, D, F	C, G	DAL2,IRC2,TEC
M8340109^5300%&	530		C,H,K,M,V	B, D	C, G	DAL2,IRC2,TEC
M8340109^5360%&	536		C,H,K,M,V	B, D, F	C, G	DAL2,IRC2,TEC
M8340109^5420%&	542		C,H,K,M,V	B, D	C, G	DAL2,IRC2,TEC
M8340109^5490%&	549	Link at Top	C,H,K,M,V	B, D, F	C, G	DAL2,IRC2,TEC
M8340109^5560%&	556		C,H,K,M,V	B, D	C, G	DAL2,IRC2,TEC
M8340109^5600%&	560		C,H,K,M,V	G, J	C, G	DAL2,IRC2,TEC
M8340109^5620%&	562		C,H,K,M,V	B, D, F	C, G	DAL2,IRC2,TEC
M8340109^5690%&	569		C,H,K,M,V	B, D	C, G	DAL2,IRC2,TEC
M8340109^5760%&	576	Link at Top	C,H,K,M,V	B, D, F	C, G	DAL2,IRC2,TEC
M8340109^5830%&	583		C,H,K,M,V	B, D	C, G	DAL2,IRC2,TEC
M8340109^5900%&	590		C,H,K,M,V	B, D, F	C, G	DAL2,IRC2,TEC
M8340109^5970%&	597		C,H,K,M,V	B, D	C, G	DAL2,IRC2,TEC
M8340109^6040%&	604		C,H,K,M,V	B, D, F	C, G	DAL2,IRC2,TEC
M8340109^6120%&	612	Link at Top	C,H,K,M,V	B, D	C, G	DAL2,IRC2,TEC
M8340109^6190%&	619		C,H,K,M,V	B, D, F	C, G	DAL2,IRC2,TEC
M8340109^6200%&	620		C,H,K,M,V	G, J	C, G	DAL2,IRC2,TEC
M8340109^6260%&	626		C,H,K,M,V	B, D	C, G	DAL2,IRC2,TEC
M8340109^6340%&	634		C,H,K,M,V	B, D, F	C, G	DAL2,IRC2,TEC
M8340109^6420%&	642	Link at Top	C,H,K,M,V	B, D	C, G	DAL2,IRC2,TEC
M8340109^6490%&	649		C,H,K,M,V	B, D, F	C, G	DAL2,IRC2,TEC
M8340109^6570%&	657		C,H,K,M,V	B, D	C, G	DAL2,IRC2,TEC
M8340109^6650%&	665		C,H,K,M,V	B, D, F	C, G	DAL2,IRC2,TEC
M8340109^6730%&	673		C,H,K,M,V	B, D	C, G	DAL2,IRC2,TEC
M8340109^6800%&	680	Link at Top	C,H,K,M,V	G, J	C, G	DAL2,IRC2,TEC
M8340109^6810%&	681		C,H,K,M,V	B, D, F	C, G	DAL2,IRC2,TEC
M8340109^6900%&	690		C,H,K,M,V	B, D	C, G	DAL2,IRC2,TEC
M8340109^6980%&	698		C,H,K,M,V	B, D, F	C, G	DAL2,IRC2,TEC
M8340109^7060%&	706		C,H,K,M,V	B, D	C, G	DAL2,IRC2,TEC
M8340109^7150%&	715	Link at Top	C,H,K,M,V	B, D, F	C, G	DAL2,IRC2,TEC
M8340109^7230%&	723		C,H,K,M,V	B, D	C, G	DAL2,IRC2,TEC
M8340109^7320%&	732		C,H,K,M,V	B, D, F	C, G	DAL2,IRC2,TEC
M8340109^7410%&	741		C,H,K,M,V	B, D	C, G	DAL2,IRC2,TEC
M8340109^7500%&	750		C,H,K,M,V	B, D, F, G, J	C, G	DAL2,IRC2,TEC
M8340109^7590%&	759	Link at Top	C,H,K,M,V	B, D	C, G	DAL2,IRC2,TEC

M8340109^7680%&	768		C,H,K,M,V	B, D, F	C, G	DAL2,IRC2,TEC
M8340109^7770%&	777		C,H,K,M,V	B, D	C, G	DAL2,IRC2,TEC
M8340109^7870%&	787		C,H,K,M,V	B, D, F	C, G	DAL2,IRC2,TEC
M8340109^7960%&	796		C,H,K,M,V	B, D	C, G	DAL2,IRC2,TEC
M8340109^8060%&	806	Link at Top	C,H,K,M,V	B, D, F	C, G	DAL2,IRC2,TEC
M8340109^8160%&	816		C,H,K,M,V	B, D	C, G	DAL2,IRC2,TEC
M8340109^8200%&	820		C,H,K,M,V	G, J	C, G	DAL2,IRC2,TEC
M8340109^8250%&	825		C,H,K,M,V	B, D, F	C, G	DAL2,IRC2,TEC
M8340109^8350%&	835		C,H,K,M,V	B, D	C, G	DAL2,IRC2,TEC
M8340109^8450%&	845	Link at Top	C,H,K,M,V	B, D, F	C, G	DAL2,IRC2,TEC
M8340109^8560%&	856		C,H,K,M,V	B, D	C, G	DAL2,IRC2,TEC
M8340109^8660%&	866		C,H,K,M,V	B, D, F	C, G	DAL2,IRC2,TEC
M8340109^8760%&	876		C,H,K,M,V	B, D	C, G	DAL2,IRC2,TEC
M8340109^8870%&	887		C,H,K,M,V	B, D, F	C, G	DAL2,IRC2,TEC
M8340109^8980%&	898	Link at Top	C,H,K,M,V	B, D	C, G	DAL2,IRC2,TEC
M8340109^9090%&	909		C,H,K,M,V	B, D, F	C, G	DAL2,IRC2,TEC
M8340109^9100%&	910		C,H,K,M,V	G, J	C, G	DAL2,IRC2,TEC
M8340109^9200%&	920		C,H,K,M,V	B, D	C, G	DAL2,IRC2,TEC
M8340109^9310%&	931		C,H,K,M,V	B, D, F	C, G	DAL2,IRC2,TEC
M8340109^9420%&	942	Link at Top	C,H,K,M,V	B, D	C, G	DAL2,IRC2,TEC
M8340109^9530%&	953		C,H,K,M,V	B, D, F	C, G	DAL2,IRC2,TEC
M8340109^9650%&	965		C,H,K,M,V	B, D	C, G	DAL2,IRC2,TEC
M8340109^9760%&	976		C,H,K,M,V	B, D, F	C, G	DAL2,IRC2,TEC
M8340109^9880%&	988		C,H,K,M,V	B, D	C, G	DAL2,IRC2,TEC
M8340109^1001%&	1,000	Link at Top	C,H,K,M,V	B, D, F, G, J	C, G	DAL2,IRC2,TEC
M8340109^1011%&	1,010		C,H,K,M,V	B, D	C, G	DAL2,IRC2,TEC
M8340109^1021%&	1,020		C,H,K,M,V	B, D, F	C, G	DAL2,IRC2,TEC
M8340109^1041%&	1,040		C,H,K,M,V	B, D	C, G	DAL2,IRC2,TEC
M8340109^1051%&	1,050		C,H,K,M,V	B, D, F	C, G	DAL2,IRC2,TEC
M8340109^1061%&	1,060	Link at Top	C,H,K,M,V	B, D	C, G	DAL2,IRC2,TEC
M8340109^1071%&	1,070		C,H,K,M,V	B, D, F	C, G	DAL2,IRC2,TEC
M8340109^1091%&	1,090		C,H,K,M,V	B, D	C, G	DAL2,IRC2,TEC
M8340109^1101%&	1,100		C,H,K,M,V	B, D, F, G, J	C, G	DAL2,IRC2,TEC
M8340109^1111%&	1,110		C,H,K,M,V	B, D	C, G	DAL2,IRC2,TEC
M8340109^1131%&	1,130	Link at Top	C,H,K,M,V	B, D, F	C, G	DAL2,IRC2,TEC
M8340109^1141%&	1,140		C,H,K,M,V	B, D	C, G	DAL2,IRC2,TEC
M8340109^1151%&	1,150		C,H,K,M,V	B, D, F	C, G	DAL2,IRC2,TEC
M8340109^1171%&	1,170		C,H,K,M,V	B, D	C, G	DAL2,IRC2,TEC
M8340109^1181%&	1,180		C,H,K,M,V	B, D, F	C, G	DAL2,IRC2,TEC
M8340109^1201%&	1,200	Link at Top	C,H,K,M,V	B, D, F, G, J	C, G	DAL2,IRC2,TEC
M8340109^1211%&	1,210		C,H,K,M,V	B, D, F	C, G	DAL2,IRC2,TEC
M8340109^1231%&	1,230		C,H,K,M,V	B, D	C, G	DAL2,IRC2,TEC
M8340109^1241%&	1,240		C,H,K,M,V	B, D, F	C, G	DAL2,IRC2,TEC
M8340109^1261%&	1,260		C,H,K,M,V	B, D	C, G	DAL2,IRC2,TEC
M8340109^1271%&	1,270	Link at Top	C,H,K,M,V	B, D, F	C, G	DAL2,IRC2,TEC
M8340109^1291%&	1,290		C,H,K,M,V	B, D	C, G	DAL2,IRC2,TEC
M8340109^1301%&	1,300		C,H,K,M,V	B, D, F, G, J	C, G	DAL2,IRC2,TEC

M8340109^1321%&	1,320		C,H,K,M,V	B, D	C, G	DAL2,IRC2,TEC
M8340109^1331%&	1,330		C,H,K,M,V	B, D, F	C, G	DAL2,IRC2,TEC
M8340109^1351%&	1,350	Link at Top	C,H,K,M,V	B, D	C, G	DAL2,IRC2,TEC
M8340109^1371%&	1,370		C,H,K,M,V	B, D, F	C, G	DAL2,IRC2,TEC
M8340109^1381%&	1,380		C,H,K,M,V	B, D	C, G	DAL2,IRC2,TEC
M8340109^1401%&	1,400		C,H,K,M,V	B, D, F	C, G	DAL2,IRC2,TEC
M8340109^1421%&	1,420		C,H,K,M,V	B, D	C, G	DAL2,IRC2,TEC
M8340109^1431%&	1,430	Link at Top	C,H,K,M,V	B, D, F	C, G	DAL2,IRC2,TEC
M8340109^1451%&	1,450		C,H,K,M,V	B, D	C, G	DAL2,IRC2,TEC
M8340109^1471%&	1,470		C,H,K,M,V	B, D, F	C, G	DAL2,IRC2,TEC
M8340109^1491%&	1,490		C,H,K,M,V	B, D	C, G	DAL2,IRC2,TEC
M8340109^1501%&	1,500		C,H,K,M,V	B, D, F, G, J	C, G	DAL2,IRC2,TEC
M8340109^1521%&	1,520	Link at Top	C,H,K,M,V	B, D	C, G	DAL2,IRC2,TEC
M8340109^1541%&	1,540		C,H,K,M,V	B, D, F	C, G	DAL2,IRC2,TEC
M8340109^1561%&	1,560		C,H,K,M,V	B, D	C, G	DAL2,IRC2,TEC
M8340109^1581%&	1,580		C,H,K,M,V	B, D, F	C, G	DAL2,IRC2,TEC
M8340109^1601%&	1,600		C,H,K,M,V	B, D, G, J	C, G	DAL2,IRC2,TEC
M8340109^1621%&	1,620	Link at Top	C,H,K,M,V	B, D, F	C, G	DAL2,IRC2,TEC
M8340109^1641%&	1,640		C,H,K,M,V	B, D	C, G	DAL2,IRC2,TEC
M8340109^1651%&	1,650		C,H,K,M,V	B, D, F	C, G	DAL2,IRC2,TEC
M8340109^1671%&	1,670		C,H,K,M,V	B, D	C, G	DAL2,IRC2,TEC
M8340109^1691%&	1,690		C,H,K,M,V	B, D, F	C, G	DAL2,IRC2,TEC
M8340109^1721%&	1,720	Link at Top	C,H,K,M,V	B, D	C, G	DAL2,IRC2,TEC
M8340109^1741%&	1,740		C,H,K,M,V	B, D, F	C, G	DAL2,IRC2,TEC
M8340109^1761%&	1,760		C,H,K,M,V	B, D	C, G	DAL2,IRC2,TEC
M8340109^1781%&	1,780		C,H,K,M,V	B, D, F	C, G	DAL2,IRC2,TEC
M8340109^1801%&	1,800		C,H,K,M,V	B, D, G, J	C, G	DAL2,IRC2,TEC
M8340109^1821%&	1,820	Link at Top	C,H,K,M,V	B, D, F	C, G	DAL2,IRC2,TEC
M8340109^1841%&	1,840		C,H,K,M,V	B, D	C, G	DAL2,IRC2,TEC
M8340109^1871%&	1,870		C,H,K,M,V	B, D, F	C, G	DAL2,IRC2,TEC
M8340109^1891%&	1,890		C,H,K,M,V	B, D	C, G	DAL2,IRC2,TEC
M8340109^1911%&	1,910		C,H,K,M,V	B, D, F	C, G	DAL2,IRC2,TEC
M8340109^1931%&	1,930	Link at Top	C,H,K,M,V	B, D	C, G	DAL2,IRC2,TEC
M8340109^1961%&	1,960		C,H,K,M,V	B, D, F	C, G	DAL2,IRC2,TEC
M8340109^1981%&	1,980		C,H,K,M,V	B, D	C, G	DAL2,IRC2,TEC
M8340109^2001%&	2,000		C,H,K,M,V	B, D, F, G, J	C, G	DAL2,IRC2,TEC
M8340109^2031%&	2,030		C,H,K,M,V	B, D	C, G	DAL2,IRC2,TEC
M8340109^2051%&	2,050	Link at Top	C,H,K,M,V	B, D, F	C, G	DAL2,IRC2,TEC
M8340109^2081%&	2,080		C,H,K,M,V	B, D	C, G	DAL2,IRC2,TEC
M8340109^2101%&	2,100		C,H,K,M,V	B, D, F	C, G	DAL2,IRC2,TEC
M8340109^2131%&	2,130		C,H,K,M,V	B, D	C, G	DAL2,IRC2,TEC
M8340109^2151%&	2,150		C,H,K,M,V	B, D, F	C, G	DAL2,IRC2,TEC
M8340109^2181%&	2,180	Link at Top	C,H,K,M,V	B, D	C, G	DAL2,IRC2,TEC
M8340109^2201%&	2,200		C,H,K,M,V	G, J	C, G	DAL2,IRC2,TEC
M8340109^2211%&	2,210		C,H,K,M,V	B, D, F	C, G	DAL2,IRC2,TEC
M8340109^2231%&	2,230		C,H,K,M,V	B, D	C, G	DAL2,IRC2,TEC
M8340109^2261%&	2,260		C,H,K,M,V	B, D, F	C, G	DAL2,IRC2,TEC

M8340109^2291%&	2,290	Link at Top	C,H,K,M,V	B, D	C, G	DAL2,IRC2,TEC
M8340109^2321%&	2,320		C,H,K,M,V	B, D, F	C, G	DAL2,IRC2,TEC
M8340109^2341%&	2,340		C,H,K,M,V	B, D	C, G	DAL2,IRC2,TEC
M8340109^2371%&	2,370		C,H,K,M,V	B, D, F	C, G	DAL2,IRC2,TEC
M8340109^2401%&	2,400		C,H,K,M,V	B, D, F, G, J	C, G	DAL2,IRC2,TEC
M8340109^2431%&	2,430	Link at Top	C,H,K,M,V	B, D, F	C, G	DAL2,IRC2,TEC
M8340109^2461%&	2,460		C,H,K,M,V	B, D	C, G	DAL2,IRC2,TEC
M8340109^2491%&	2,490		C,H,K,M,V	B, D, F	C, G	DAL2,IRC2,TEC
M8340109^2521%&	2,520		C,H,K,M,V	B, D	C, G	DAL2,IRC2,TEC
M8340109^2551%&	2,550		C,H,K,M,V	B, D, F	C, G	DAL2,IRC2,TEC
M8340109^2581%&	2,580	Link at Top	C,H,K,M,V	B, D	C, G	DAL2,IRC2,TEC
M8340109^2611%&	2,610		C,H,K,M,V	B, D, F	C, G	DAL2,IRC2,TEC
M8340109^2641%&	2,640		C,H,K,M,V	B, D	C, G	DAL2,IRC2,TEC
M8340109^2671%&	2,670		C,H,K,M,V	B, D, F	C, G	DAL2,IRC2,TEC
M8340109^2701%&	2,700		C,H,K,M,V	G, J	C, G	DAL2,IRC2,TEC
M8340109^2711%&	2,710	Link at Top	C,H,K,M,V	B, D	C, G	DAL2,IRC2,TEC
M8340109^2741%&	2,740		C,H,K,M,V	B, D, F	C, G	DAL2,IRC2,TEC
M8340109^2771%&	2,770		C,H,K,M,V	B, D	C, G	DAL2,IRC2,TEC
M8340109^2801%&	2,800		C,H,K,M,V	B, D, F	C, G	DAL2,IRC2,TEC
M8340109^2841%&	2,840		C,H,K,M,V	B, D	C, G	DAL2,IRC2,TEC
M8340109^2871%&	2,870	Link at Top	C,H,K,M,V	B, D, F	C, G	DAL2,IRC2,TEC
M8340109^2911%&	2,910		C,H,K,M,V	B, D	C, G	DAL2,IRC2,TEC
M8340109^2941%&	2,940		C,H,K,M,V	B, D, F	C, G	DAL2,IRC2,TEC
M8340109^2981%&	2,980		C,H,K,M,V	B, D	C, G	DAL2,IRC2,TEC
M8340109^3001%&	3,000		C,H,K,M,V	G, J	C, G	DAL2,IRC2,TEC
M8340109^3011%&	3,010	Link at Top	C,H,K,M,V	B, D, F	C, G	DAL2,IRC2,TEC
M8340109^3051%&	3,050		C,H,K,M,V	B, D	C, G	DAL2,IRC2,TEC
M8340109^3091%&	3,090		C,H,K,M,V	B, D, F	C, G	DAL2,IRC2,TEC
M8340109^3121%&	3,120		C,H,K,M,V	B, D	C, G	DAL2,IRC2,TEC
M8340109^3161%&	3,160		C,H,K,M,V	B, D, F	C, G	DAL2,IRC2,TEC
M8340109^3201%&	3,200	Link at Top	C,H,K,M,V	B, D	C, G	DAL2,IRC2,TEC
M8340109^3241%&	3,240		C,H,K,M,V	B, D, F	C, G	DAL2,IRC2,TEC
M8340109^3281%&	3,280		C,H,K,M,V	B, D	C, G	DAL2,IRC2,TEC
M8340109^3301%&	3,300		C,H,K,M,V	G, J	C, G	DAL2,IRC2,TEC
M8340109^3321%&	3,320		C,H,K,M,V	B, D, F	C, G	DAL2,IRC2,TEC
M8340109^3361%&	3,360	Link at Top	C,H,K,M,V	B, D	C, G	DAL2,IRC2,TEC
M8340109^3401%&	3,400		C,H,K,M,V	B, D, F	C, G	DAL2,IRC2,TEC
M8340109^3441%&	3,440		C,H,K,M,V	B, D	C, G	DAL2,IRC2,TEC
M8340109^3481%&	3,480		C,H,K,M,V	B, D, F	C, G	DAL2,IRC2,TEC
M8340109^3521%&	3,520		C,H,K,M,V	B, D	C, G	DAL2,IRC2,TEC
M8340109^3571%&	3,570	Link at Top	C,H,K,M,V	B, D, F	C, G	DAL2,IRC2,TEC
M8340109^3601%&	3,600		C,H,K,M,V	G, J	C, G	DAL2,IRC2,TEC
M8340109^3611%&	3,610		C,H,K,M,V	B, D	C, G	DAL2,IRC2,TEC
M8340109^3651%&	3,650		C,H,K,M,V	B, D, F	C, G	DAL2,IRC2,TEC
M8340109^3701%&	3,700		C,H,K,M,V	B, D	C, G	DAL2,IRC2,TEC
M8340109^3741%&	3,740	Link at Top	C,H,K,M,V	B, D, F	C, G	DAL2,IRC2,TEC
M8340109^3791%&	3,790		C,H,K,M,V	B, D	C, G	DAL2,IRC2,TEC

M8340109^3831%&	3,830		C,H,K,M,V	B, D, F	C, G	DAL2,IRC2,TEC
M8340109^3881%&	3,880		C,H,K,M,V	B, D	C, G	DAL2,IRC2,TEC
M8340109^3901%&	3,900		C,H,K,M,V	G, J	C, G	DAL2,IRC2,TEC
M8340109^3921%&	3,920	Link at Top	C,H,K,M,V	B, D, F	C, G	DAL2,IRC2,TEC
M8340109^3971%&	3,970		C,H,K,M,V	B, D	C, G	DAL2,IRC2,TEC
M8340109^4021%&	4,020		C,H,K,M,V	B, D, F	C, G	DAL2,IRC2,TEC
M8340109^4071%&	4,070		C,H,K,M,V	B, D	C, G	DAL2,IRC2,TEC
M8340109^4121%&	4,120		C,H,K,M,V	B, D, F	C, G	DAL2,IRC2,TEC
M8340109^4171%&	4,170	Link at Top	C,H,K,M,V	B, D	C, G	DAL2,IRC2,TEC
M8340109^4221%&	4,220		C,H,K,M,V	B, D, F	C, G	DAL2,IRC2,TEC
M8340109^4271%&	4,270		C,H,K,M,V	B, D	C, G	DAL2,IRC2,TEC
M8340109^4301%&	4,300		C,H,K,M,V	G, J	C, G	DAL2,IRC2,TEC
M8340109^4321%&	4,320		C,H,K,M,V	B, D, F	C, G	DAL2,IRC2,TEC
M8340109^4371%&	4,370	Link at Top	C,H,K,M,V	B, D	C, G	DAL2,IRC2,TEC
M8340109^4421%&	4,420		C,H,K,M,V	B, D, F	C, G	DAL2,IRC2,TEC
M8340109^4481%&	4,480		C,H,K,M,V	B, D	C, G	DAL2,IRC2,TEC
M8340109^4531%&	4,530		C,H,K,M,V	B, D, F	C, G	DAL2,IRC2,TEC
M8340109^4591%&	4,590		C,H,K,M,V	B, D	C, G	DAL2,IRC2,TEC
M8340109^4641%&	4,640	Link at Top	C,H,K,M,V	B, D, F	C, G	DAL2,IRC2,TEC
M8340109^4701%&	4,700		C,H,K,M,V	B, D, G, J	C, G	DAL2,IRC2,TEC
M8340109^4751%&	4,750		C,H,K,M,V	B, D, F	C, G	DAL2,IRC2,TEC
M8340109^4811%&	4,810		C,H,K,M,V	B, D	C, G	DAL2,IRC2,TEC
M8340109^4871%&	4,870		C,H,K,M,V	B, D, F	C, G	DAL2,IRC2,TEC
M8340109^4931%&	4,930	Link at Top	C,H,K,M,V	B, D	C, G	DAL2,IRC2,TEC
M8340109^4991%&	4,990		C,H,K,M,V	B, D, F	C, G	DAL2,IRC2,TEC
M8340109^5051%&	5,050		C,H,K,M,V	B, D	C, G	DAL2,IRC2,TEC
M8340109^5101%&	5,100		C,H,K,M,V	G, J	C, G	DAL2,IRC2,TEC
M8340109^5111%&	5,110		C,H,K,M,V	B, D, F	C, G	DAL2,IRC2,TEC
M8340109^5171%&	5,170	Link at Top	C,H,K,M,V	B, D	C, G	DAL2,IRC2,TEC
M8340109^5231%&	5,230		C,H,K,M,V	B, D, F	C, G	DAL2,IRC2,TEC
M8340109^5301%&	5,300		C,H,K,M,V	B, D	C, G	DAL2,IRC2,TEC
M8340109^5361%&	5,360		C,H,K,M,V	B, D, F	C, G	DAL2,IRC2,TEC
M8340109^5421%&	5,420		C,H,K,M,V	B, D	C, G	DAL2,IRC2,TEC
M8340109^5491%&	5,490	Link at Top	C,H,K,M,V	B, D, F	C, G	DAL2,IRC2,TEC
M8340109^5561%&	5,560		C,H,K,M,V	B, D	C, G	DAL2,IRC2,TEC
M8340109^5601%&	5,600		C,H,K,M,V	G, J	C, G	DAL2,IRC2,TEC
M8340109^5621%&	5,620		C,H,K,M,V	B, D, F	C, G	DAL2,IRC2,TEC
M8340109^5691%&	5,690		C,H,K,M,V	B, D	C, G	DAL2,IRC2,TEC
M8340109^5761%&	5,760	Link at Top	C,H,K,M,V	B, D, F	C, G	DAL2,IRC2,TEC
M8340109^5831%&	5,830		C,H,K,M,V	B, D	C, G	DAL2,IRC2,TEC
M8340109^5901%&	5,900		C,H,K,M,V	B, D, F	C, G	DAL2,IRC2,TEC
M8340109^5971%&	5,970		C,H,K,M,V	B, D	C, G	DAL2,IRC2,TEC
M8340109^6041%&	6,040		C,H,K,M,V	B, D, F	C, G	DAL2,IRC2,TEC
M8340109^6121%&	6,120	Link at Top	C,H,K,M,V	B, D	C, G	DAL2,IRC2,TEC
M8340109^6191%&	6,190		C,H,K,M,V	B, D, F	C, G	DAL2,IRC2,TEC
M8340109^6201%&	6,200		C,H,K,M,V	G, J	C, G	DAL2,IRC2,TEC
M8340109^6261%&	6,260		C,H,K,M,V	B, D	C, G	DAL2,IRC2,TEC

M8340109^6341%&	6,340		C,H,K,M,V	B, D, F	C, G	DAL2,IRC2,TEC
M8340109^6421%&	6,420	Link at Top	C,H,K,M,V	B, D	C, G	DAL2,IRC2,TEC
M8340109^6491%&	6,490		C,H,K,M,V	B, D, F	C, G	DAL2,IRC2,TEC
M8340109^6571%&	6,570		C,H,K,M,V	B, D	C, G	DAL2,IRC2,TEC
M8340109^6651%&	6,650		C,H,K,M,V	B, D, F	C, G	DAL2,IRC2,TEC
M8340109^6731%&	6,730		C,H,K,M,V	B, D	C, G	DAL2,IRC2,TEC
M8340109^6801%&	6,800	Link at Top	C,H,K,M,V	G, J	C, G	DAL2,IRC2,TEC
M8340109^6811%&	6,810		C,H,K,M,V	B, D, F	C, G	DAL2,IRC2,TEC
M8340109^6901%&	6,900		C,H,K,M,V	B, D	C, G	DAL2,IRC2,TEC
M8340109^6981%&	6,980		C,H,K,M,V	B, D, F	C, G	DAL2,IRC2,TEC
M8340109^7061%&	7,060		C,H,K,M,V	B, D	C, G	DAL2,IRC2,TEC
M8340109^7151%&	7,150	Link at Top	C,H,K,M,V	B, D, F	C, G	DAL2,IRC2,TEC
M8340109^7231%&	7,230		C,H,K,M,V	B, D	C, G	DAL2,IRC2,TEC
M8340109^7321%&	7,320		C,H,K,M,V	B, D, F	C, G	DAL2,IRC2,TEC
M8340109^7411%&	7,410		C,H,K,M,V	B, D	C, G	DAL2,IRC2,TEC
M8340109^7501%&	7,500		C,H,K,M,V	B, D, F, G, J	C, G	DAL2,IRC2,TEC
M8340109^7591%&	7,590	Link at Top	C,H,K,M,V	B, D	C, G	DAL2,IRC2,TEC
M8340109^7681%&	7,680		C,H,K,M,V	B, D, F	C, G	DAL2,IRC2,TEC
M8340109^7771%&	7,770		C,H,K,M,V	B, D	C, G	DAL2,IRC2,TEC
M8340109^7871%&	7,870		C,H,K,M,V	B, D, F	C, G	DAL2,IRC2,TEC
M8340109^7961%&	7,960		C,H,K,M,V	B, D	C, G	DAL2,IRC2,TEC
M8340109^8061%&	8,060	Link at Top	C,H,K,M,V	B, D, F	C, G	DAL2,IRC2,TEC
M8340109^8161%&	8,160		C,H,K,M,V	B, D	C, G	DAL2,IRC2,TEC
M8340109^8201%&	8,200		C,H,K,M,V	G, J	C, G	DAL2,IRC2,TEC
M8340109^8251%&	8,250		C,H,K,M,V	B, D, F	C, G	DAL2,IRC2,TEC
M8340109^8351%&	8,350		C,H,K,M,V	B, D	C, G	DAL2,IRC2,TEC
M8340109^8451%&	8,450	Link at Top	C,H,K,M,V	B, D, F	C, G	DAL2,IRC2,TEC
M8340109^8561%&	8,560		C,H,K,M,V	B, D	C, G	DAL2,IRC2,TEC
M8340109^8661%&	8,660		C,H,K,M,V	B, D, F	C, G	DAL2,IRC2,TEC
M8340109^8761%&	8,760		C,H,K,M,V	B, D	C, G	DAL2,IRC2,TEC
M8340109^8871%&	8,870		C,H,K,M,V	B, D, F	C, G	DAL2,IRC2,TEC
M8340109^8981%&	8,980	Link at Top	C,H,K,M,V	B, D	C, G	DAL2,IRC2,TEC
M8340109^9091%&	9,090		C,H,K,M,V	B, D, F	C, G	DAL2,IRC2,TEC
M8340109^9101%&	9,100		C,H,K,M,V	G, J	C, G	DAL2,IRC2,TEC
M8340109^9201%&	9,200		C,H,K,M,V	B, D	C, G	DAL2,IRC2,TEC
M8340109^9311%&	9,310		C,H,K,M,V	B, D, F	C, G	DAL2,IRC2,TEC
M8340109^9421%&	9,420	Link at Top	C,H,K,M,V	B, D	C, G	DAL2,IRC2,TEC
M8340109^9531%&	9,530		C,H,K,M,V	B, D, F	C, G	DAL2,IRC2,TEC
M8340109^9651%&	9,650		C,H,K,M,V	B, D	C, G	DAL2,IRC2,TEC
M8340109^9761%&	9,760		C,H,K,M,V	B, D, F	C, G	DAL2,IRC2,TEC
M8340109^9881%&	9,880		C,H,K,M,V	B, D	C, G	DAL2,IRC2,TEC
M8340109^1002%&	10,000	Link at Top	C,H,K,M,V	B, D, F, G, J	C, G	DAL2,IRC2,TEC
M8340109^1012%&	10,100		C,H,K,M,V	B, D	C, G	DAL2,IRC2,TEC
M8340109^1022%&	10,200		C,H,K,M,V	B, D, F	C, G	DAL2,IRC2,TEC
M8340109^1042%&	10,400		C,H,K,M,V	B, D	C, G	DAL2,IRC2,TEC
M8340109^1052%&	10,500		C,H,K,M,V	B, D, F	C, G	DAL2,IRC2,TEC
M8340109^1062%&	10,600	Link at Top	C,H,K,M,V	B, D	C, G	DAL2,IRC2,TEC

M8340109^1072%&	10,700		C,H,K,M,V	B, D, F	C, G	DAL2,IRC2,TEC
M8340109^1092%&	10,900		C,H,K,M,V	B, D	C, G	DAL2,IRC2,TEC
M8340109^1102%&	11,000		C,H,K,M,V	B, D, F, G, J	C, G	DAL2,IRC2,TEC
M8340109^1112%&	11,100		C,H,K,M,V	B, D	C, G	DAL2,IRC2,TEC
M8340109^1132%&	11,300	Link at Top	C,H,K,M,V	B, D, F	C, G	DAL2,IRC2,TEC
M8340109^1142%&	11,400		C,H,K,M,V	B, D	C, G	DAL2,IRC2,TEC
M8340109^1152%&	11,500		C,H,K,M,V	B, D, F	C, G	DAL2,IRC2,TEC
M8340109^1172%&	11,700		C,H,K,M,V	B, D	C, G	DAL2,IRC2,TEC
M8340109^1182%&	11,800		C,H,K,M,V	B, D, F	C, G	DAL2,IRC2,TEC
M8340109^1202%&	12,000	Link at Top	C,H,K,M,V	B, D, F, G, J	C, G	DAL2,IRC2,TEC
M8340109^1212%&	12,100		C,H,K,M,V	B, D, F	C, G	DAL2,IRC2,TEC
M8340109^1232%&	12,300		C,H,K,M,V	B, D	C, G	DAL2,IRC2,TEC
M8340109^1242%&	12,400		C,H,K,M,V	B, D, F	C, G	DAL2,IRC2,TEC
M8340109^1262%&	12,600		C,H,K,M,V	B, D	C, G	DAL2,IRC2,TEC
M8340109^1272%&	12,700	Link at Top	C,H,K,M,V	B, D, F	C, G	DAL2,IRC2,TEC
M8340109^1292%&	12,900		C,H,K,M,V	B, D	C, G	DAL2,IRC2,TEC
M8340109^1302%&	13,000		C,H,K,M,V	B, D, F, G, J	C, G	DAL2,IRC2,TEC
M8340109^1322%&	13,200		C,H,K,M,V	B, D	C, G	DAL2,IRC2,TEC
M8340109^1332%&	13,300		C,H,K,M,V	B, D, F	C, G	DAL2,IRC2,TEC
M8340109^1352%&	13,500	Link at Top	C,H,K,M,V	B, D	C, G	DAL2,IRC2,TEC
M8340109^1372%&	13,700		C,H,K,M,V	B, D, F	C, G	DAL2,IRC2,TEC
M8340109^1382%&	13,800		C,H,K,M,V	B, D	C, G	DAL2,IRC2,TEC
M8340109^1402%&	14,000		C,H,K,M,V	B, D, F	C, G	DAL2,IRC2,TEC
M8340109^1422%&	14,200		C,H,K,M,V	B, D	C, G	DAL2,IRC2,TEC
M8340109^1432%&	14,300	Link at Top	C,H,K,M,V	B, D, F	C, G	DAL2,IRC2,TEC
M8340109^1452%&	14,500		C,H,K,M,V	B, D	C, G	DAL2,IRC2,TEC
M8340109^1472%&	14,700		C,H,K,M,V	B, D, F	C, G	DAL2,IRC2,TEC
M8340109^1492%&	14,900		C,H,K,M,V	B, D	C, G	DAL2,IRC2,TEC
M8340109^1502%&	15,000		C,H,K,M,V	B, D, F, G, J	C, G	DAL2,IRC2,TEC
M8340109^1522%&	15,200	Link at Top	C,H,K,M,V	B, D	C, G	DAL2,IRC2,TEC
M8340109^1542%&	15,400		C,H,K,M,V	B, D, F	C, G	DAL2,IRC2,TEC
M8340109^1562%&	15,600		C,H,K,M,V	B, D	C, G	DAL2,IRC2,TEC
M8340109^1582%&	15,800		C,H,K,M,V	B, D, F	C, G	DAL2,IRC2,TEC
M8340109^1602%&	16,000		C,H,K,M,V	B, D, G, J	C, G	DAL2,IRC2,TEC
M8340109^1622%&	16,200	Link at Top	C,H,K,M,V	B, D, F	C, G	DAL2,IRC2,TEC
M8340109^1642%&	16,400		C,H,K,M,V	B, D	C, G	DAL2,IRC2,TEC
M8340109^1652%&	16,500		C,H,K,M,V	B, D, F	C, G	DAL2,IRC2,TEC
M8340109^1672%&	16,700		C,H,K,M,V	B, D	C, G	DAL2,IRC2,TEC
M8340109^1692%&	16,900		C,H,K,M,V	B, D, F	C, G	DAL2,IRC2,TEC
M8340109^1722%&	17,200	Link at Top	C,H,K,M,V	B, D	C, G	DAL2,IRC2,TEC
M8340109^1742%&	17,400		C,H,K,M,V	B, D, F	C, G	DAL2,IRC2,TEC
M8340109^1762%&	17,600		C,H,K,M,V	B, D	C, G	DAL2,IRC2,TEC
M8340109^1782%&	17,800		C,H,K,M,V	B, D, F	C, G	DAL2,IRC2,TEC
M8340109^1802%&	18,000		C,H,K,M,V	B, D, G, J	C, G	DAL2,IRC2,TEC
M8340109^1822%&	18,200	Link at Top	C,H,K,M,V	B, D, F	C, G	DAL2,IRC2,TEC
M8340109^1842%&	18,400		C,H,K,M,V	B, D	C, G	DAL2,IRC2,TEC
M8340109^1872%&	18,700		C,H,K,M,V	B, D, F	C, G	DAL2,IRC2,TEC

M8340109^1892%&	18,900		C,H,K,M,V	B, D	C, G	DAL2,IRC2,TEC
M8340109^1912%&	19,100		C,H,K,M,V	B, D, F	C, G	DAL2,IRC2,TEC
M8340109^1932%&	19,300	Link at Top	C,H,K,M,V	B, D	C, G	DAL2,IRC2,TEC
M8340109^1962%&	19,600		C,H,K,M,V	B, D, F	C, G	DAL2,IRC2,TEC
M8340109^1982%&	19,800		C,H,K,M,V	B, D	C, G	DAL2,IRC2,TEC
M8340109^2002%&	20,000		C,H,K,M,V	B, D, F, G, J	C, G	DAL2,IRC2,TEC
M8340109^2032%&	20,300		C,H,K,M,V	B, D	C, G	DAL2,IRC2,TEC
M8340109^2052%&	20,500	Link at Top	C,H,K,M,V	B, D, F	C, G	DAL2,IRC2,TEC
M8340109^2082%&	20,800		C,H,K,M,V	B, D	C, G	DAL2,IRC2,TEC
M8340109^2102%&	21,000		C,H,K,M,V	B, D, F	C, G	DAL2,IRC2,TEC
M8340109^2132%&	21,300		C,H,K,M,V	B, D	C, G	DAL2,IRC2,TEC
M8340109^2152%&	21,500		C,H,K,M,V	B, D, F	C, G	DAL2,IRC2,TEC
M8340109^2182%&	21,800	Link at Top	C,H,K,M,V	B, D	C, G	DAL2,IRC2,TEC
M8340109^2202%&	22,000		C,H,K,M,V	G, J	C, G	DAL2,IRC2,TEC
M8340109^2212%&	22,100		C,H,K,M,V	B, D, F	C, G	DAL2,IRC2,TEC
M8340109^2232%&	22,300		C,H,K,M,V	B, D	C, G	DAL2,IRC2,TEC
M8340109^2262%&	22,600		C,H,K,M,V	B, D, F	C, G	DAL2,IRC2,TEC
M8340109^2292%&	22,900	Link at Top	C,H,K,M,V	B, D	C, G	DAL2,IRC2,TEC
M8340109^2322%&	23,200		C,H,K,M,V	B, D, F	C, G	DAL2,IRC2,TEC
M8340109^2342%&	23,400		C,H,K,M,V	B, D	C, G	DAL2,IRC2,TEC
M8340109^2372%&	23,700		C,H,K,M,V	B, D, F	C, G	DAL2,IRC2,TEC
M8340109^2402%&	24,000		C,H,K,M,V	B, D, F, G, J	C, G	DAL2,IRC2,TEC
M8340109^2432%&	24,300	Link at Top	C,H,K,M,V	B, D, F	C, G	DAL2,IRC2,TEC
M8340109^2462%&	24,600		C,H,K,M,V	B, D	C, G	DAL2,IRC2,TEC
M8340109^2492%&	24,900		C,H,K,M,V	B, D, F	C, G	DAL2,IRC2,TEC
M8340109^2522%&	25,200		C,H,K,M,V	B, D	C, G	DAL2,IRC2,TEC
M8340109^2552%&	25,500		C,H,K,M,V	B, D, F	C, G	DAL2,IRC2,TEC
M8340109^2582%&	25,800	Link at Top	C,H,K,M,V	B, D	C, G	DAL2,IRC2,TEC
M8340109^2612%&	26,100		C,H,K,M,V	B, D, F	C, G	DAL2,IRC2,TEC
M8340109^2642%&	26,400		C,H,K,M,V	B, D	C, G	DAL2,IRC2,TEC
M8340109^2672%&	26,700		C,H,K,M,V	B, D, F	C, G	DAL2,IRC2,TEC
M8340109^2702%&	27,000		C,H,K,M,V	G, J	C, G	DAL2,IRC2,TEC
M8340109^2712%&	27,100	Link at Top	C,H,K,M,V	B, D	C, G	DAL2,IRC2,TEC
M8340109^2742%&	27,400		C,H,K,M,V	B, D, F	C, G	DAL2,IRC2,TEC
M8340109^2772%&	27,700		C,H,K,M,V	B, D	C, G	DAL2,IRC2,TEC
M8340109^2802%&	28,000		C,H,K,M,V	B, D, F	C, G	DAL2,IRC2,TEC
M8340109^2842%&	28,400		C,H,K,M,V	B, D	C, G	DAL2,IRC2,TEC
M8340109^2872%&	28,700	Link at Top	C,H,K,M,V	B, D, F	C, G	DAL2,IRC2,TEC
M8340109^2912%&	29,100		C,H,K,M,V	B, D	C, G	DAL2,IRC2,TEC
M8340109^2942%&	29,400		C,H,K,M,V	B, D, F	C, G	DAL2,IRC2,TEC
M8340109^2982%&	29,800		C,H,K,M,V	B, D	C, G	DAL2,IRC2,TEC
M8340109^3002%&	30,000		C,H,K,M,V	G, J	C, G	DAL2,IRC2,TEC
M8340109^3012%&	30,100	Link at Top	C,H,K,M,V	B, D, F	C, G	DAL2,IRC2,TEC
M8340109^3052%&	30,500		C,H,K,M,V	B, D	C, G	DAL2,IRC2,TEC
M8340109^3092%&	30,900		C,H,K,M,V	B, D, F	C, G	DAL2,IRC2,TEC
M8340109^3122%&	31,200		C,H,K,M,V	B, D	C, G	DAL2,IRC2,TEC
M8340109^3162%&	31,600		C,H,K,M,V	B, D, F	C, G	DAL2,IRC2,TEC

M8340109^3202%&	32,000	Link at Top	C,H,K,M,V	B, D	C, G	DAL2,IRC2,TEC
M8340109^3242%&	32,400		C,H,K,M,V	B, D, F	C, G	DAL2,IRC2,TEC
M8340109^3282%&	32,800		C,H,K,M,V	B, D	C, G	DAL2,IRC2,TEC
M8340109^3302%&	33,000		C,H,K,M,V	G, J	C, G	DAL2,IRC2,TEC
M8340109^3322%&	33,200		C,H,K,M,V	B, D, F	C, G	DAL2,IRC2,TEC
M8340109^3362%&	33,600	Link at Top	C,H,K,M,V	B, D	C, G	DAL2,IRC2,TEC
M8340109^3402%&	34,000		C,H,K,M,V	B, D, F	C, G	DAL2,IRC2,TEC
M8340109^3442%&	34,400		C,H,K,M,V	B, D	C, G	DAL2,IRC2,TEC
M8340109^3482%&	34,800		C,H,K,M,V	B, D, F	C, G	DAL2,IRC2,TEC
M8340109^3522%&	35,200		C,H,K,M,V	B, D	C, G	DAL2,IRC2,TEC
M8340109^3572%&	35,700	Link at Top	C,H,K,M,V	B, D, F	C, G	DAL2,IRC2,TEC
M8340109^3602%&	36,000		C,H,K,M,V	G, J	C, G	DAL2,IRC2,TEC
M8340109^3612%&	36,100		C,H,K,M,V	B, D	C, G	DAL2,IRC2,TEC
M8340109^3652%&	36,500		C,H,K,M,V	B, D, F	C, G	DAL2,IRC2,TEC
M8340109^3702%&	37,000		C,H,K,M,V	B, D	C, G	DAL2,IRC2,TEC
M8340109^3742%&	37,400	Link at Top	C,H,K,M,V	B, D, F	C, G	DAL2,IRC2,TEC
M8340109^3792%&	37,900		C,H,K,M,V	B, D	C, G	DAL2,IRC2,TEC
M8340109^3832%&	38,300		C,H,K,M,V	B, D, F	C, G	DAL2,IRC2,TEC
M8340109^3882%&	38,800		C,H,K,M,V	B, D	C, G	DAL2,IRC2,TEC
M8340109^3902%&	39,000		C,H,K,M,V	G, J	C, G	DAL2,IRC2,TEC
M8340109^3922%&	39,200	Link at Top	C,H,K,M,V	B, D, F	C, G	DAL2,IRC2,TEC
M8340109^3972%&	39,700		C,H,K,M,V	B, D	C, G	DAL2,IRC2,TEC
M8340109^4022%&	40,200		C,H,K,M,V	B, D, F	C, G	DAL2,IRC2,TEC
M8340109^4072%&	40,700		C,H,K,M,V	B, D	C, G	DAL2,IRC2,TEC
M8340109^4122%&	41,200		C,H,K,M,V	B, D, F	C, G	DAL2,IRC2,TEC
M8340109^4172%&	41,700	Link at Top	C,H,K,M,V	B, D	C, G	DAL2,IRC2,TEC
M8340109^4222%&	42,200		C,H,K,M,V	B, D, F	C, G	DAL2,IRC2,TEC
M8340109^4272%&	42,700		C,H,K,M,V	B, D	C, G	DAL2,IRC2,TEC
M8340109^4302%&	43,000		C,H,K,M,V	G, J	C, G	DAL2,IRC2,TEC
M8340109^4322%&	43,200		C,H,K,M,V	B, D, F	C, G	DAL2,IRC2,TEC
M8340109^4372%&	43,700	Link at Top	C,H,K,M,V	B, D	C, G	DAL2,IRC2,TEC
M8340109^4422%&	44,200		C,H,K,M,V	B, D, F	C, G	DAL2,IRC2,TEC
M8340109^4482%&	44,800		C,H,K,M,V	B, D	C, G	DAL2,IRC2,TEC
M8340109^4532%&	45,300		C,H,K,M,V	B, D, F	C, G	DAL2,IRC2,TEC
M8340109^4592%&	45,900		C,H,K,M,V	B, D	C, G	DAL2,IRC2,TEC
M8340109^4642%&	46,400	Link at Top	C,H,K,M,V	B, D, F	C, G	DAL2,IRC2,TEC
M8340109^4702%&	47,000		C,H,K,M,V	B, D, G, J	C, G	DAL2,IRC2,TEC
M8340109^4752%&	47,500		C,H,K,M,V	B, D, F	C, G	DAL2,IRC2,TEC
M8340109^4812%&	48,100		C,H,K,M,V	B, D	C, G	DAL2,IRC2,TEC
M8340109^4872%&	48,700		C,H,K,M,V	B, D, F	C, G	DAL2,IRC2,TEC
M8340109^4932%&	49,300	Link at Top	C,H,K,M,V	B, D	C, G	DAL2,IRC2,TEC
M8340109^4992%&	49,900		C,H,K,M,V	B, D, F	C, G	DAL2,IRC2,TEC
M8340109^5052%&	50,500		C,H,K,M,V	B, D	C, G	DAL2,IRC2,TEC
M8340109^5102%&	51,000		C,H,K,M,V	G, J	C, G	DAL2,IRC2,TEC
M8340109^5112%&	51,100		C,H,K,M,V	B, D, F	C, G	DAL2,IRC2,TEC
M8340109^5172%&	51,700	Link at Top	C,H,K,M,V	B, D	C, G	DAL2,IRC2,TEC
M8340109^5232%&	52,300		C,H,K,M,V	B, D, F	C, G	DAL2,IRC2,TEC

M8340109^5302%&	53,000		C,H,K,M,V	B, D	C, G	DAL2,IRC2,TEC
M8340109^5362%&	53,600		C,H,K,M,V	B, D, F	C, G	DAL2,IRC2,TEC
M8340109^5422%&	54,200		C,H,K,M,V	B, D	C, G	DAL2,IRC2,TEC
M8340109^5492%&	54,900	Link at Top	C,H,K,M,V	B, D, F	C, G	DAL2,IRC2,TEC
M8340109^5562%&	55,600		C,H,K,M,V	B, D	C, G	DAL2,IRC2,TEC
M8340109^5602%&	56,000		C,H,K,M,V	G, J	C, G	DAL2,IRC2,TEC
M8340109^5622%&	56,200		C,H,K,M,V	B, D, F	C, G	DAL2,IRC2,TEC
M8340109^5692%&	56,900		C,H,K,M,V	B, D	C, G	DAL2,IRC2,TEC
M8340109^5762%&	57,600	Link at Top	C,H,K,M,V	B, D, F	C, G	DAL2,IRC2,TEC
M8340109^5832%&	58,300		C,H,K,M,V	B, D	C, G	DAL2,IRC2,TEC
M8340109^5902%&	59,000		C,H,K,M,V	B, D, F	C, G	DAL2,IRC2,TEC
M8340109^5972%&	59,700		C,H,K,M,V	B, D	C, G	DAL2,IRC2,TEC
M8340109^6042%&	60,400		C,H,K,M,V	B, D, F	C, G	DAL2,IRC2,TEC
M8340109^6122%&	61,200	Link at Top	C,H,K,M,V	B, D	C, G	DAL2,IRC2,TEC
M8340109^6192%&	61,900		C,H,K,M,V	B, D, F	C, G	DAL2,IRC2,TEC
M8340109^6202%&	62,000		C,H,K,M,V	G, J	C, G	DAL2,IRC2,TEC
M8340109^6262%&	62,600		C,H,K,M,V	B, D	C, G	DAL2,IRC2,TEC
M8340109^6342%&	63,400		C,H,K,M,V	B, D, F	C, G	DAL2,IRC2,TEC
M8340109^6422%&	64,200	Link at Top	C,H,K,M,V	B, D	C, G	DAL2,IRC2,TEC
M8340109^6492%&	64,900		C,H,K,M,V	B, D, F	C, G	DAL2,IRC2,TEC
M8340109^6572%&	65,700		C,H,K,M,V	B, D	C, G	DAL2,IRC2,TEC
M8340109^6652%&	66,500		C,H,K,M,V	B, D, F	C, G	DAL2,IRC2,TEC
M8340109^6732%&	67,300		C,H,K,M,V	B, D	C, G	DAL2,IRC2,TEC
M8340109^6802%&	68,000	Link at Top	C,H,K,M,V	G, J	C, G	DAL2,IRC2,TEC
M8340109^6812%&	68,100		C,H,K,M,V	B, D, F	C, G	DAL2,IRC2,TEC
M8340109^6902%&	69,000		C,H,K,M,V	B, D	C, G	DAL2,IRC2,TEC
M8340109^6982%&	69,800		C,H,K,M,V	B, D, F	C, G	DAL2,IRC2,TEC
M8340109^7062%&	70,600		C,H,K,M,V	B, D	C, G	DAL2,IRC2,TEC
M8340109^7152%&	71,500	Link at Top	C,H,K,M,V	B, D, F	C, G	DAL2,IRC2,TEC
M8340109^7232%&	72,300		C,H,K,M,V	B, D	C, G	DAL2,IRC2,TEC
M8340109^7322%&	73,200		C,H,K,M,V	B, D, F	C, G	DAL2,IRC2,TEC
M8340109^7412%&	74,100		C,H,K,M,V	B, D	C, G	DAL2,IRC2,TEC
M8340109^7502%&	75,000		C,H,K,M,V	B, D, F, G, J	C, G	DAL2,IRC2,TEC
M8340109^7592%&	75,900	Link at Top	C,H,K,M,V	B, D	C, G	DAL2,IRC2,TEC
M8340109^7682%&	76,800		C,H,K,M,V	B, D, F	C, G	DAL2,IRC2,TEC
M8340109^7772%&	77,700		C,H,K,M,V	B, D	C, G	DAL2,IRC2,TEC
M8340109^7872%&	78,700		C,H,K,M,V	B, D, F	C, G	DAL2,IRC2,TEC
M8340109^7962%&	79,600		C,H,K,M,V	B, D	C, G	DAL2,IRC2,TEC
M8340109^8062%&	80,600	Link at Top	C,H,K,M,V	B, D, F	C, G	DAL2,IRC2,TEC
M8340109^8162%&	81,600		C,H,K,M,V	B, D	C, G	DAL2,IRC2,TEC
M8340109^8202%&	82,000		C,H,K,M,V	G, J	C, G	DAL2,IRC2,TEC
M8340109^8252%&	82,500		C,H,K,M,V	B, D, F	C, G	DAL2,IRC2,TEC
M8340109^8352%&	83,500		C,H,K,M,V	B, D	C, G	DAL2,IRC2,TEC
M8340109^8452%&	84,500	Link at Top	C,H,K,M,V	B, D, F	C, G	DAL2,IRC2,TEC
M8340109^8562%&	85,600		C,H,K,M,V	B, D	C, G	DAL2,IRC2,TEC
M8340109^8662%&	86,600		C,H,K,M,V	B, D, F	C, G	DAL2,IRC2,TEC
M8340109^8762%&	87,600		C,H,K,M,V	B, D	C, G	DAL2,IRC2,TEC

M8340109^8872%&	88,700		C,H,K,M,V	B, D, F	C, G	DAL2,IRC2,TEC
M8340109^8982%&	89,800	Link at Top	C,H,K,M,V	B, D	C, G	DAL2,IRC2,TEC
M8340109^9092%&	90,900		C,H,K,M,V	B, D, F	C, G	DAL2,IRC2,TEC
M8340109^9102%&	91,000		C,H,K,M,V	G, J	C, G	DAL2,IRC2,TEC
M8340109^9202%&	92,000		C,H,K,M,V	B, D	C, G	DAL2,IRC2,TEC
M8340109^9312%&	93,100		C,H,K,M,V	B, D, F	C, G	DAL2,IRC2,TEC
M8340109^9422%&	94,200	Link at Top	C,H,K,M,V	B, D	C, G	DAL2,IRC2,TEC
M8340109^9532%&	95,300		C,H,K,M,V	B, D, F	C, G	DAL2,IRC2,TEC
M8340109^9652%&	96,500		C,H,K,M,V	B, D	C, G	DAL2,IRC2,TEC
M8340109^9762%&	97,600		C,H,K,M,V	B, D, F	C, G	DAL2,IRC2,TEC
M8340109^9882%&	98,800		C,H,K,M,V	B, D	C, G	DAL2,IRC2,TEC
M8340109^1003%&	100,000	Link at Top	C,H,K,M,V	B, D, F, G, J	C, G	DAL2,IRC2,TEC
M8340109^1023%&	102,000		C,H,K,M,V	F	C, G	DAL2
M8340109^1053%&	105,000		C,H,K,M,V	F	C, G	DAL2
M8340109^1073%&	107,000		C,H,K,M,V	F	C, G	DAL2
M8340109^1103%&	110,000		C,H,K,M,V	F, G, J	C, G	DAL2
M8340109^1133%&	113,000	Link at Top	C,H,K,M,V	F	C, G	DAL2
M8340109^1153%&	115,000		C,H,K,M,V	F	C, G	DAL2
M8340109^1183%&	118,000		C,H,K,M,V	F	C, G	DAL2
M8340109^1203%&	120,000	Link at Top	C,H,K,M,V	F, G, J	C, G	DAL2
M8340109^1213%&	121,000		C,H,K,M,V	F	C, G	DAL2
M8340109^1243%&	124,000		C,H,K,M,V	F	C, G	DAL2
M8340109^1273%&	127,000	Link at Top	C,H,K,M,V	F	C, G	DAL2
M8340109^1303%&	130,000		C,H,K,M,V	F, G, J	C, G	DAL2
M8340109^1333%&	133,000		C,H,K,M,V	F	C, G	DAL2
M8340109^1373%&	137,000		C,H,K,M,V	F	C, G	DAL2
M8340109^1403%&	140,000		C,H,K,M,V	F	C, G	DAL2
M8340109^1433%&	143,000	Link at Top	C,H,K,M,V	F	C, G	DAL2
M8340109^1473%&	147,000		C,H,K,M,V	F	C, G	DAL2
M8340109^1503%&	150,000		C,H,K,M,V	F, G, J	C, G	DAL2
M8340109^1543%&	154,000		C,H,K,M,V	F	C, G	DAL2
M8340109^1583%&	158,000		C,H,K,M,V	F	C, G	DAL2
M8340109^1603%&	160,000		C,H,K,M,V	G, J	C, G	DAL2
M8340109^1623%&	162,000	Link at Top	C,H,K,M,V	F	C, G	DAL2
M8340109^1653%&	165,000		C,H,K,M,V	F	C, G	DAL2
M8340109^1693%&	169,000		C,H,K,M,V	F	C, G	DAL2
M8340109^1743%&	174,000		C,H,K,M,V	F	C, G	DAL2
M8340109^1783%&	178,000		C,H,K,M,V	F	C, G	DAL2
M8340109^1803%&	180,000		C,H,K,M,V	G, J	C, G	DAL2
M8340109^1823%&	182,000	Link at Top	C,H,K,M,V	F	C, G	DAL2
M8340109^1873%&	187,000		C,H,K,M,V	F	C, G	DAL2
M8340109^1913%&	191,000		C,H,K,M,V	F	C, G	DAL2
M8340109^1963%&	196,000		C,H,K,M,V	F	C, G	DAL2
M8340109^2003%&	200,000		C,H,K,M,V	F, G, J	C, G	DAL2
M8340109^2053%&	205,000	Link at Top	C,H,K,M,V	F	C, G	DAL2
M8340109^2103%&	210,000		C,H,K,M,V	F	C, G	DAL2
M8340109^2153%&	215,000		C,H,K,M,V	F	C, G	DAL2

M8340109^2183%&	218,000	Link at Top	C,H,K,M,V		C, G	DAL2
M8340109^2203%&	220,000		C,H,K,M,V	G, J	C, G	DAL2
M8340109^2213%&	221,000		C,H,K,M,V	F	C, G	DAL2
M8340109^2263%&	226,000		C,H,K,M,V	F	C, G	DAL2
M8340109^2323%&	232,000		C,H,K,M,V	F	C, G	DAL2
M8340109^2373%&	237,000		C,H,K,M,V	F	C, G	DAL2
M8340109^2403%&	240,000		C,H,K,M,V	F, G, J	C, G	DAL2
M8340109^2433%&	243,000	Link at Top	C,H,K,M,V	F	C, G	DAL2
M8340109^2493%&	249,000		C,H,K,M,V	F	C, G	DAL2
M8340109^2553%&	255,000		C,H,K,M,V	F	C, G	DAL2
M8340109^2613%&	261,000		C,H,K,M,V	F	C, G	DAL2
M8340109^2673%&	267,000		C,H,K,M,V	F	C, G	DAL2
M8340109^2703%&	270,000		C,H,K,M,V	G, J	C, G	DAL2
M8340109^2743%&	274,000		C,H,K,M,V	F	C, G	DAL2
M8340109^2803%&	280,000		C,H,K,M,V	F	C, G	DAL2
M8340109^2873%&	287,000	Link at Top	C,H,K,M,V	F	C, G	DAL2
M8340109^2943%&	294,000		C,H,K,M,V	F	C, G	DAL2
M8340109^3003%&	300,000		C,H,K,M,V	G, J	C, G	DAL2
M8340109^3013%&	301,000	Link at Top	C,H,K,M,V	F	C, G	DAL2
M8340109^3093%&	309,000		C,H,K,M,V	F	C, G	DAL2
M8340109^3163%&	316,000		C,H,K,M,V	F	C, G	DAL2
M8340109^3243%&	324,000		C,H,K,M,V	F	C, G	DAL2
M8340109^3303%&	330,000		C,H,K,M,V	G, J	C, G	DAL2
M8340109^3323%&	332,000		C,H,K,M,V	F	C, G	DAL2
M8340109^3403%&	340,000		C,H,K,M,V	F	C, G	DAL2
M8340109^3483%&	348,000		C,H,K,M,V	F	C, G	DAL2
M8340109^3573%&	357,000	Link at Top	C,H,K,M,V	F	C, G	DAL2
M8340109^3603%&	360,000		C,H,K,M,V	G, J	C, G	DAL2
M8340109^3653%&	365,000		C,H,K,M,V	F	C, G	DAL2
M8340109^3743%&	374,000	Link at Top	C,H,K,M,V	F	C, G	DAL2
M8340109^3833%&	383,000		C,H,K,M,V	F	C, G	DAL2
M8340109^3903%&	390,000		C,H,K,M,V	G, J	C, G	DAL2
M8340109^3923%&	392,000	Link at Top	C,H,K,M,V	F	C, G	DAL2
M8340109^4023%&	402,000		C,H,K,M,V	F	C, G	DAL2
M8340109^4123%&	412,000		C,H,K,M,V	F	C, G	DAL2
M8340109^4223%&	422,000		C,H,K,M,V	F	C, G	DAL2
M8340109^4303%&	430,000		C,H,K,M,V	G, J	C, G	DAL2
M8340109^4323%&	432,000		C,H,K,M,V	F	C, G	DAL2
M8340109^4423%&	442,000		C,H,K,M,V	F	C, G	DAL2
M8340109^4533%&	453,000		C,H,K,M,V	F	C, G	DAL2
M8340109^4643%&	464,000	Link at Top	C,H,K,M,V	F	C, G	DAL2
M8340109^4703%&	470,000		C,H,K,M,V	G, J	C, G	DAL2
M8340109^4753%&	475,000		C,H,K,M,V	F	C, G	DAL2
M8340109^4873%&	487,000		C,H,K,M,V	F	C, G	DAL2
M8340109^4993%&	499,000		C,H,K,M,V	F	C, G	DAL2
M8340109^5103%&	510,000		C,H,K,M,V	G, J	C, G	DAL2
M8340109^5113%&	511,000		C,H,K,M,V	F	C, G	DAL2

M8340109^5233%&	523,000		C,H,K,M,V	F	C, G	DAL2
M8340109^5363%&	536,000		C,H,K,M,V	F	C, G	DAL2
M8340109^5493%&	549,000	Link at Top	C,H,K,M,V	F	C, G	DAL2
M8340109^5603%&	560,000		C,H,K,M,V	G, J	C, G	DAL2
M8340109^5623%&	562,000		C,H,K,M,V	F	C, G	DAL2
M8340109^5763%&	576,000	Link at Top	C,H,K,M,V	F	C, G	DAL2
M8340109^5903%&	590,000		C,H,K,M,V	F	C, G	DAL2
M8340109^6043%&	604,000		C,H,K,M,V	F	C, G	DAL2
M8340109^6193%&	619,000		C,H,K,M,V	F	C, G	DAL2
M8340109^6203%&	620,000		C,H,K,M,V	G, J	C, G	DAL2
M8340109^6343%&	634,000		C,H,K,M,V	F	C, G	DAL2
M8340109^6493%&	649,000		C,H,K,M,V	F	C, G	DAL2
M8340109^6653%&	665,000		C,H,K,M,V	F	C, G	DAL2
M8340109^6803%&	680,000	Link at Top	C,H,K,M,V	G, J	C, G	DAL2
M8340109^6813%&	681,000		C,H,K,M,V	F	C, G	DAL2
M8340109^6983%&	698,000		C,H,K,M,V	F	C, G	DAL2
M8340109^7153%&	715,000	Link at Top	C,H,K,M,V	F	C, G	DAL2
M8340109^7323%&	732,000		C,H,K,M,V	F	C, G	DAL2
M8340109^7503%&	750,000		C,H,K,M,V	F, G, J	C, G	DAL2
M8340109^7683%&	768,000		C,H,K,M,V	F	C, G	DAL2
M8340109^7873%&	787,000		C,H,K,M,V	F	C, G	DAL2
M8340109^8063%&	806,000	Link at Top	C,H,K,M,V	F	C, G	DAL2
M8340109^8203%&	820,000		C,H,K,M,V	G, J	C, G	DAL2
M8340109^8253%&	825,000		C,H,K,M,V	F	C, G	DAL2
M8340109^8453%&	845,000	Link at Top	C,H,K,M,V	F	C, G	DAL2
M8340109^8663%&	866,000		C,H,K,M,V	F	C, G	DAL2
M8340109^8873%&	887,000		C,H,K,M,V	F	C, G	DAL2
M8340109^9093%&	909,000		C,H,K,M,V	F	C, G	DAL2
M8340109^9103%&	910,000		C,H,K,M,V	G, J	C, G	DAL2
M8340109^9313%&	931,000		C,H,K,M,V	F	C, G	DAL2
M8340109^9533%&	953,000		C,H,K,M,V	F	C, G	DAL2
M8340109^9763%&	976,000		C,H,K,M,V	F	C, G	DAL2
M8340109^1004%&	1,000,000	Link at Top	C,H,K,M,V	F, G, J	C, G	DAL2

RZ090 RESISTORS

DECADE BREAKDOWN

Click on the link below to see the associated parts selection listing:

Resistance Range
10.0 Ohms through 97.6 Ohms
100 Ohms through 988 Ohms
1,000 Ohms through 9,880 Ohms
10,000 Ohms through 98,800 Ohms
100,000 Ohms through 1,000,000 Ohms

Schematic	Characteristic	Element Power Rating (W)	Network Power Rating (W)
C	C	0.06	0.54
C	H	0.12	1.08
C	K	0.12	1.08
C	M	0.12	1.08
C	V	0.06	0.54
G	C	0.06	0.30
G	H	0.12	0.60
G	K	0.12	0.60
G	M	0.12	0.60
G	V	0.06	0.30

Style RZ090

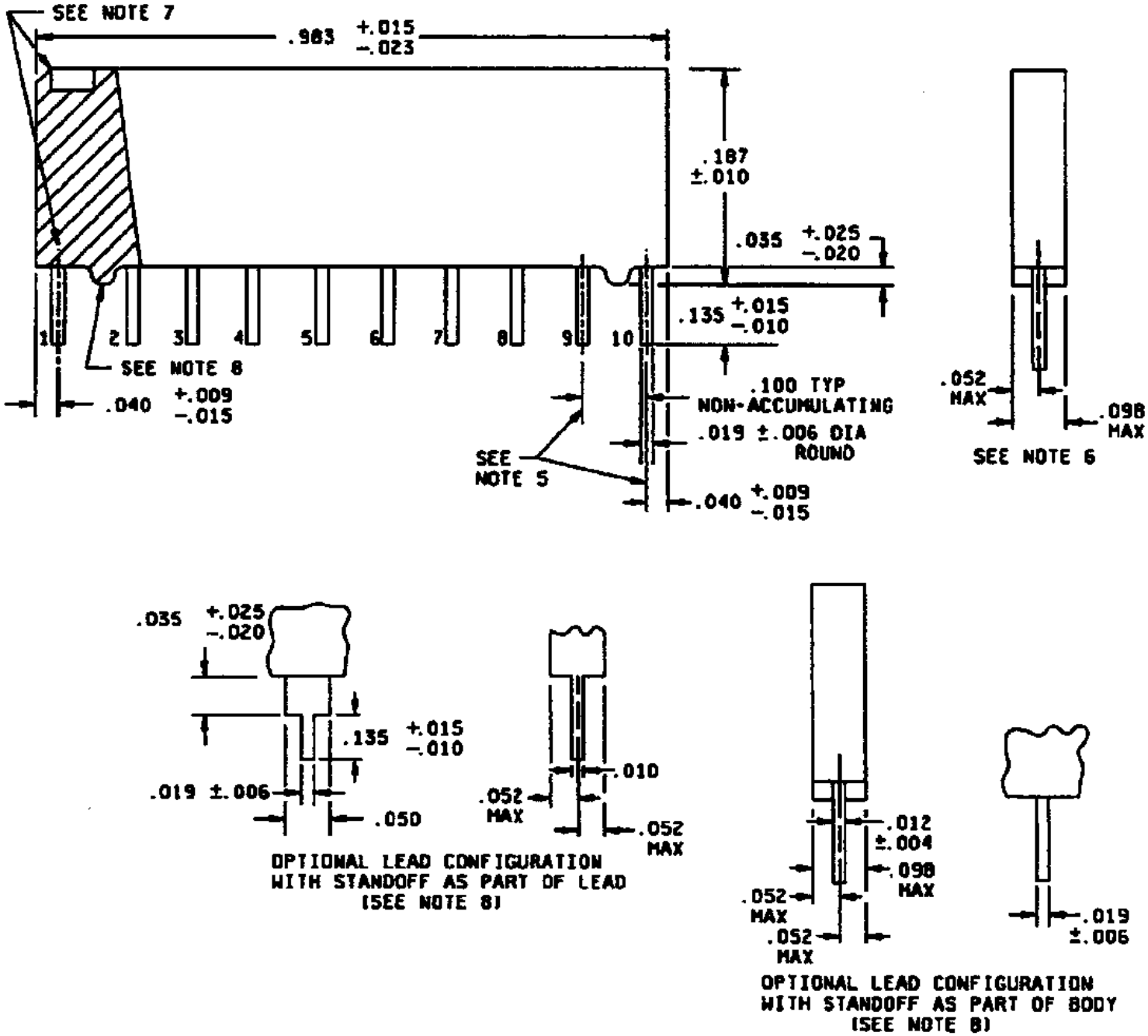
SEE NOTE 7
.983 +.015 -.023
.187 ±.010
.035 +.025 -.020
.135 +.015 -.010
1
2
3
4
5
6
7
8
9
10
SEE NOTE 8
.040 +.009 -.015
.100 TYP NON-ACCUMULATING
.019 ±.006 DIA ROUND
SEE NOTE 5
.040 +.009 -.015
.052 MAX
.098 MAX
SEE NOTE 6
.035 +.025 -.020
.135 +.015 -.010
.019 ±.006
.050
.052 MAX
.010
.052 MAX
OPTIONAL LEAD CONFIGURATION WITH STANDOFF AS PART OF LEAD (SEE NOTE 8)
.012 ±.004
.098 MAX
.052 MAX
.052 MAX
.019 ±.006
OPTIONAL LEAD CONFIGURATION WITH STANDOFF AS PART OF BODY (SEE NOTE 8)

Notes:

1) Dimensions are inches.

2) Metric equivalents are given for general information only.

3) Unless otherwise specified, tolerances are +/- 0.005 (0.13 mm).

4) The picturization of the styles above is given as representative of the envelope and do not alter the functional aspects of the device, are acceptable.

5) Terminal centerline to centerline measurements made at point of emergence of the lead of the body.

6) Measurement made at the point of emergence of the lead of the body.

7) Pin 1 locator shall be a dot, notch, stripe, or numeral 1 adjacent to pin no. 1, in the shaded area; also, additional marking may be placed on top edge where the bevel may be located.

8) If the standoffs are located on the body, a minimum of two standoffs are required as illustrated. As an option, additional standoffs may be located on the body of the resistor network. If leads with standoffs are used, standoffs on the body are not required.

MIL-PRF-83401/9 (RZ090) Film Resistor Networks: 10.0 Ohms Through 97.6 Ohms

	Resistance	Power	Char.	Res.		
Part Number	Value (Ohms)	Rating	(^)	Tolerance	Schematic	Manufacturer
M8340109^10R0%&	10.0	See PN Ordering Section	C,H,K,M,V	F, G, J	C, G	DAL2
M8340109^10R2%&	10.2		C,H,K,M,V	F	C, G	DAL2
M8340109^10R5%&	10.5		C,H,K,M,V	F	C, G	DAL2
M8340109^10R7%&	10.7		C,H,K,M,V	F	C, G	DAL2
M8340109^11R0%&	11.0		C,H,K,M,V	F, G, J	C, G	DAL2
M8340109^11R3%&	11.3	See PN Ordering Section	C,H,K,M,V	F	C, G	DAL2
M8340109^11R5%&	11.5		C,H,K,M,V	F	C, G	DAL2
M8340109^11R8%&	11.8		C,H,K,M,V	F	C, G	DAL2
M8340109^12R0%&	12.0		C,H,K,M,V	F, G, J	C, G	DAL2
M8340109^12R1%&	12.1		C,H,K,M,V	F	C, G	DAL2
M8340109^12R4%&	12.4	See PN Ordering Section	C,H,K,M,V	F	C, G	DAL2
M8340109^12R7%&	12.7		C,H,K,M,V	F	C, G	DAL2
M8340109^13R0%&	13.0		C,H,K,M,V	F, G, J	C, G	DAL2
M8340109^13R3%&	13.3		C,H,K,M,V	F	C, G	DAL2
	Resistance	Power	Char.	Res.		
Part Number	Value (Ohms)	Rating	(^)	Tolerance	Schematic	Manufacturer
M8340109^13R7%&	13.7		C,H,K,M,V	F	C, G	DAL2
M8340109^14R0%&	14.0	See PN Ordering Section	C,H,K,M,V	F	C, G	DAL2
M8340109^14R3%&	14.3		C,H,K,M,V	F	C, G	DAL2
M8340109^14R7%&	14.7		C,H,K,M,V	F	C, G	DAL2
M8340109^15R0%&	15.0		C,H,K,M,V	F, G, J	C, G	DAL2
M8340109^15R4%&	15.4		C,H,K,M,V	F	C, G	DAL2
M8340109^15R8%&	15.8	See PN Ordering Section	C,H,K,M,V	F	C, G	DAL2

M8340109^16R0%&	16.0		C,H,K,M,V	G, J	C, G	DAL2
M8340109^16R2%&	16.2		C,H,K,M,V	F	C, G	DAL2
M8340109^16R5%&	16.5		C,H,K,M,V	F	C, G	DAL2
M8340109^16R9%&	16.9		C,H,K,M,V	F	C, G	DAL2
M8340109^17R4%&	17.4	See PN Ordering Section	C,H,K,M,V	F	C, G	DAL2
M8340109^17R8%&	17.8		C,H,K,M,V	F	C, G	DAL2
M8340109^18R0%&	18.0		C,H,K,M,V	G, J	C, G	DAL2
	Resistance	Power	Char.	Res.		
Part Number	Value (Ohms)	Rating	(^)	Tolerance	Schematic	Manufacturer
M8340109^18R2%&	18.2		C,H,K,M,V	F	C, G	DAL2
M8340109^18R7%&	18.7		C,H,K,M,V	F	C, G	DAL2
M8340109^19R1%&	19.1	See PN Ordering Section	C,H,K,M,V	F	C, G	DAL2
M8340109^19R6%&	19.6		C,H,K,M,V	F	C, G	DAL2
M8340109^20R0%&	20.0		C,H,K,M,V	F, G, J	C, G	DAL2
M8340109^20R5%&	20.5		C,H,K,M,V	F	C, G	DAL2
M8340109^21R0%&	21.0		C,H,K,M,V	F	C, G	DAL2
M8340109^21R5%&	21.5	See PN Ordering Section	C,H,K,M,V	F	C, G	DAL2
M8340109^22R0%&	22.0		C,H,K,M,V	G, J	C, G	DAL2
M8340109^22R1%&	22.1		C,H,K,M,V	F	C, G	DAL2
M8340109^22R6%&	22.6		C,H,K,M,V	F	C, G	DAL2
M8340109^23R2%&	23.2		C,H,K,M,V	F	C, G	DAL2
	Resistance	Power	Char.	Res.		
Part Number	Value (Ohms)	Rating	(^)	Tolerance	Schematic	Manufacturer
M8340109^23R7%&	23.7	See PN Ordering Section	C,H,K,M,V	F	C, G	DAL2
M8340109^24R0%&	24.0		C,H,K,M,V	F, G, J	C, G	DAL2
M8340109^24R3%&	24.3		C,H,K,M,V	F	C, G	DAL2
M8340109^24R9%&	24.9		C,H,K,M,V	F	C, G	DAL2
M8340109^25R5%&	25.5		C,H,K,M,V	F	C, G	DAL2
M8340109^26R1%&	26.1	See PN Ordering Section	C,H,K,M,V	F	C, G	DAL2
M8340109^26R7%&	26.7		C,H,K,M,V	F	C, G	DAL2
M8340109^27R0%&	27.0		C,H,K,M,V	G, J	C, G	DAL2,TEC
M8340109^27R4%&	27.4		C,H,K,M,V	F	C, G	DAL2,TEC
M8340109^28R0%&	28.0		C,H,K,M,V	F	C, G	DAL2,TEC
M8340109^28R7%&	28.7	See PN Ordering Section	C,H,K,M,V	F	C, G	DAL2,TEC
M8340109^29R4%&	29.4		C,H,K,M,V	F	C, G	DAL2,TEC
M8340109^30R0%&	30.0		C,H,K,M,V	G, J	C, G	DAL2,TEC
M8340109^30R1%&	30.1		C,H,K,M,V	F	C, G	DAL2,TEC
	Resistance	Power	Char.	Res.		
Part Number	Value (Ohms)	Rating	(^)	Tolerance	Schematic	Manufacturer
M8340109^30R9%&	30.9		C,H,K,M,V	F	C, G	DAL2,TEC
M8340109^31R6%&	31.6	See PN Ordering Section	C,H,K,M,V	F	C, G	DAL2,TEC
M8340109^32R4%&	32.4		C,H,K,M,V	F	C, G	DAL2,TEC
M8340109^33R0%&	33.0		C,H,K,M,V	G, J	C, G	DAL2,TEC
M8340109^33R2%&	33.2		C,H,K,M,V	F	C, G	DAL2,TEC
M8340109^34R0%&	34.0		C,H,K,M,V	F	C, G	DAL2,TEC
M8340109^34R8%&	34.8	See PN Ordering Section	C,H,K,M,V	F	C, G	DAL2,TEC
M8340109^35R7%&	35.7		C,H,K,M,V	F	C, G	DAL2,TEC

M8340109^36R0%&	36.0		C,H,K,M,V	G, J	C, G	DAL2,TEC
M8340109^36R5%&	36.5		C,H,K,M,V	F	C, G	DAL2,TEC
M8340109^37R4%&	37.4		C,H,K,M,V	F	C, G	DAL2,TEC
M8340109^38R3%&	38.3	See PN Ordering Section	C,H,K,M,V	F	C, G	DAL2,TEC
M8340109^39R0%&	39.0		C,H,K,M,V	G, J	C, G	DAL2,TEC
M8340109^39R2%&	39.2		C,H,K,M,V	F	C, G	DAL2,TEC
	Resistance	Power	Char.	Res.		
Part Number	Value (Ohms)	Rating	(^)	Tolerance	Schematic	Manufacturer
M8340109^40R2%&	40.2		C,H,K,M,V	F	C, G	DAL2,TEC
M8340109^41R2%&	41.2		C,H,K,M,V	F	C, G	DAL2,TEC
M8340109^42R2%&	42.2	See PN Ordering Section	C,H,K,M,V	F	C, G	DAL2,TEC
M8340109^43R0%&	43.0		C,H,K,M,V	G, J	C, G	DAL2,TEC
M8340109^43R2%&	43.2		C,H,K,M,V	F	C, G	DAL2,TEC
M8340109^44R2%&	44.2		C,H,K,M,V	F	C, G	DAL2,TEC
M8340109^45R3%&	45.3		C,H,K,M,V	F	C, G	DAL2,TEC
M8340109^46R4%&	46.4	See PN Ordering Section	C,H,K,M,V	F	C, G	DAL2,TEC
M8340109^47R0%&	47.0		C,H,K,M,V	G, J	C, G	DAL2,TEC
M8340109^47R5%&	47.5		C,H,K,M,V	F	C, G	DAL2,TEC
M8340109^48R7%&	48.7		C,H,K,M,V	F	C, G	DAL2,TEC
M8340109^49R9%&	49.9		C,H,K,M,V	F	C, G	DAL2,TEC
M8340109^51R0%&	51.0	See PN Ordering Section	C,H,K,M,V	G, J	C, G	DAL2,TEC
M8340109^51R1%&	51.1		C,H,K,M,V	F	C, G	DAL2,TEC
	Resistance	Power	Char.	Res.		
Part Number	Value (Ohms)	Rating	(^)	Tolerance	Schematic	Manufacturer
M8340109^52R3%&	52.3		C,H,K,M,V	F	C, G	DAL2,TEC
M8340109^53R6%&	53.6		C,H,K,M,V	F	C, G	DAL2,TEC
M8340109^54R9%&	54.9		C,H,K,M,V	F	C, G	DAL2,TEC
M8340109^56R0%&	56.0	See PN Ordering Section	C,H,K,M,V	G, J	C, G	DAL2,TEC
M8340109^56R2%&	56.2		C,H,K,M,V	F	C, G	DAL2,TEC
M8340109^57R6%&	57.6		C,H,K,M,V	F	C, G	DAL2,TEC
M8340109^59R0%&	59.0		C,H,K,M,V	F	C, G	DAL2,TEC
M8340109^60R4%&	60.4		C,H,K,M,V	F	C, G	DAL2,TEC
M8340109^61R9%&	61.9	See PN Ordering Section	C,H,K,M,V	F	C, G	DAL2,TEC
M8340109^62R0%&	62.0		C,H,K,M,V	G, J	C, G	DAL2,TEC
M8340109^63R4%&	63.4		C,H,K,M,V	F	C, G	DAL2,TEC
M8340109^64R9%&	64.9		C,H,K,M,V	F	C, G	DAL2,TEC
M8340109^66R5%&	66.5		C,H,K,M,V	F	C, G	DAL2,TEC
M8340109^68R0%&	68.0	See PN Ordering Section	C,H,K,M,V	G, J	C, G	DAL2,TEC
	Resistance	Power	Char.	Res.		
Part Number	Value (Ohms)	Rating	(^)	Tolerance	Schematic	Manufacturer
M8340109^68R1%&	68.1		C,H,K,M,V	F	C, G	DAL2,TEC
M8340109^69R8%&	69.8		C,H,K,M,V	F	C, G	DAL2,TEC
M8340109^71R5%&	71.5		C,H,K,M,V	F	C, G	DAL2,TEC
M8340109^73R2%&	73.2		C,H,K,M,V	F	C, G	DAL2,TEC
M8340109^75R0%&	75.0	See PN Ordering Section	C,H,K,M,V	F, G, J	C, G	DAL2,TEC
M8340109^76R8%&	76.8		C,H,K,M,V	F	C, G	DAL2,TEC
M8340109^78R7%&	78.7		C,H,K,M,V	F	C, G	DAL2,TEC

M8340109^80R6%&	80.6		C,H,K,M,V	F	C, G	DAL2,TEC
M8340109^82R0%&	82.0		C,H,K,M,V	G, J	C, G	DAL2,TEC
M8340109^82R5%&	82.5	See PN Ordering Section	C,H,K,M,V	F	C, G	DAL2,TEC
M8340109^84R5%&	84.5		C,H,K,M,V	F	C, G	DAL2,TEC
M8340109^86R6%&	86.6		C,H,K,M,V	F	C, G	DAL2,TEC
M8340109^88R7%&	88.7		C,H,K,M,V	F	C, G	DAL2,TEC
M8340109^90R9%&	90.9		C,H,K,M,V	F	C, G	DAL2,TEC
	Resistance	Power	Char.	Res.		
Part Number	Value (Ohms)	Rating	(^)	Tolerance	Schematic	Manufacturer
M8340109^91R0%&	91.0	See PN Ordering Section	C,H,K,M,V	G, J	C, G	DAL2,TEC
M8340109^93R1%&	93.1		C,H,K,M,V	F	C, G	DAL2,TEC
M8340109^95R3%&	95.3		C,H,K,M,V	F	C, G	DAL2,TEC
M8340109^97R6%&	97.6		C,H,K,M,V	F	C, G	DAL2,TEC

MIL-PRF-83401/9 (RZ090) Film Resistor Networks: 100 Ohms Through 988 Ohms

	Resistance	Power	Char.	Res.		
Part Number	Value (Ohms)	Rating	(^)	Tolerance	Schematic	Manufacturer
M8340109^1000%&	100		C,H,K,M,V	B, D, F, G, J	C, G	DAL2,IRC2,TEC
M8340109^1010%&	101	See PN Ordering Section	C,H,K,M,V	B, D	C, G	DAL2,IRC2,TEC
M8340109^1020%&	102		C,H,K,M,V	B, D, F	C, G	DAL2,IRC2,TEC
M8340109^1040%&	104		C,H,K,M,V	B, D	C, G	DAL2,IRC2,TEC
M8340109^1050%&	105		C,H,K,M,V	B, D, F	C, G	DAL2,IRC2,TEC
M8340109^1060%&	106		C,H,K,M,V	B, D	C, G	DAL2,IRC2,TEC
M8340109^1070%&	107	See PN Ordering Section	C,H,K,M,V	B, D, F	C, G	DAL2,IRC2,TEC
M8340109^1090%&	109		C,H,K,M,V	B, D	C, G	DAL2,IRC2,TEC
M8340109^1100%&	110		C,H,K,M,V	B, D, F, G, J	C, G	DAL2,IRC2,TEC
M8340109^1110%&	111		C,H,K,M,V	B, D	C, G	DAL2,IRC2,TEC
M8340109^1130%&	113		C,H,K,M,V	B, D, F	C, G	DAL2,IRC2,TEC
M8340109^1140%&	114	See PN Ordering Section	C,H,K,M,V	B, D	C, G	DAL2,IRC2,TEC
M8340109^1150%&	115		C,H,K,M,V	B, D, F	C, G	DAL2,IRC2,TEC
M8340109^1170%&	117		C,H,K,M,V	B, D	C, G	DAL2,IRC2,TEC
	Resistance	Power	Char.	Res.		
Part Number	Value (Ohms)	Rating	(^)	Tolerance	Schematic	Manufacturer
M8340109^1180%&	118		C,H,K,M,V	B, D, F	C, G	DAL2,IRC2,TEC
M8340109^1200%&	120		C,H,K,M,V	B, D, F, G, J	C, G	DAL2,IRC2,TEC
M8340109^1210%&	121	See PN Ordering Section	C,H,K,M,V	B, D, F	C, G	DAL2,IRC2,TEC
M8340109^1230%&	123		C,H,K,M,V	B, D	C, G	DAL2,IRC2,TEC
M8340109^1240%&	124		C,H,K,M,V	B, D, F	C, G	DAL2,IRC2,TEC
M8340109^1260%&	126		C,H,K,M,V	B, D	C, G	DAL2,IRC2,TEC
M8340109^1270%&	127		C,H,K,M,V	B, D, F	C, G	DAL2,IRC2,TEC
M8340109^1290%&	129	See PN Ordering Section	C,H,K,M,V	B, D	C, G	DAL2,IRC2,TEC
M8340109^1300%&	130		C,H,K,M,V	B, D, F, G, J	C, G	DAL2,IRC2,TEC
M8340109^1320%&	132		C,H,K,M,V	B, D	C, G	DAL2,IRC2,TEC
M8340109^1330%&	133		C,H,K,M,V	B, D, F	C, G	DAL2,IRC2,TEC

M8340109^1350%&	135	See PN Ordering Section	C,H,K,M,V	B, D	C, G	DAL2,IRC2,TEC
M8340109^1370%&	137		C,H,K,M,V	B, D, F	C, G	DAL2,IRC2,TEC
M8340109^1380%&	138		C,H,K,M,V	B, D	C, G	DAL2,IRC2,TEC
	Resistance	Power	Char.	Res.		
Part Number	Value (Ohms)	Rating	(^)	Tolerance	Schematic	Manufacturer
M8340109^1400%&	140		C,H,K,M,V	B, D, F	C, G	DAL2,IRC2,TEC
M8340109^1420%&	142		C,H,K,M,V	B, D	C, G	DAL2,IRC2,TEC
M8340109^1430%&	143	See PN Ordering Section	C,H,K,M,V	B, D, F	C, G	DAL2,IRC2,TEC
M8340109^1450%&	145		C,H,K,M,V	B, D	C, G	DAL2,IRC2,TEC
M8340109^1470%&	147		C,H,K,M,V	B, D, F	C, G	DAL2,IRC2,TEC
M8340109^1490%&	149		C,H,K,M,V	B, D	C, G	DAL2,IRC2,TEC
M8340109^1500%&	150		C,H,K,M,V	B, D, F, G, J	C, G	DAL2,IRC2,TEC
M8340109^1520%&	152	See PN Ordering Section	C,H,K,M,V	B, D	C, G	DAL2,IRC2,TEC
M8340109^1540%&	154		C,H,K,M,V	B, D, F	C, G	DAL2,IRC2,TEC
M8340109^1560%&	156		C,H,K,M,V	B, D	C, G	DAL2,IRC2,TEC
M8340109^1580%&	158		C,H,K,M,V	B, D, F	C, G	DAL2,IRC2,TEC
M8340109^1600%&	160		C,H,K,M,V	B, D, G, J	C, G	DAL2,IRC2,TEC
M8340109^1620%&	162	See PN Ordering Section	C,H,K,M,V	B, D, F	C, G	DAL2,IRC2,TEC
M8340109^1640%&	164		C,H,K,M,V	B, D	C, G	DAL2,IRC2,TEC
	Resistance	Power	Char.	Res.		
Part Number	Value (Ohms)	Rating	(^)	Tolerance	Schematic	Manufacturer
M8340109^1650%&	165		C,H,K,M,V	B, D, F	C, G	DAL2,IRC2,TEC
M8340109^1670%&	167		C,H,K,M,V	B, D	C, G	DAL2,IRC2,TEC
M8340109^1690%&	169		C,H,K,M,V	B, D, F	C, G	DAL2,IRC2,TEC
M8340109^1720%&	172	See PN Ordering Section	C,H,K,M,V	B, D	C, G	DAL2,IRC2,TEC
M8340109^1740%&	174		C,H,K,M,V	B, D, F	C, G	DAL2,IRC2,TEC
M8340109^1760%&	176		C,H,K,M,V	B, D	C, G	DAL2,IRC2,TEC
M8340109^1780%&	178		C,H,K,M,V	B, D, F	C, G	DAL2,IRC2,TEC
M8340109^1800%&	180		C,H,K,M,V	B, D, G, J	C, G	DAL2,IRC2,TEC
M8340109^1820%&	182	See PN Ordering Section	C,H,K,M,V	B, D, F	C, G	DAL2,IRC2,TEC
M8340109^1840%&	184		C,H,K,M,V	B, D	C, G	DAL2,IRC2,TEC
M8340109^1870%&	187		C,H,K,M,V	B, D, F	C, G	DAL2,IRC2,TEC
M8340109^1890%&	189		C,H,K,M,V	B, D	C, G	DAL2,IRC2,TEC
M8340109^1910%&	191		C,H,K,M,V	B, D, F	C, G	DAL2,IRC2,TEC
M8340109^1930%&	193	See PN Ordering Section	C,H,K,M,V	B, D	C, G	DAL2,IRC2,TEC
	Resistance	Power	Char.	Res.		
Part Number	Value (Ohms)	Rating	(^)	Tolerance	Schematic	Manufacturer
M8340109^1960%&	196		C,H,K,M,V	B, D, F	C, G	DAL2,IRC2,TEC
M8340109^1980%&	198		C,H,K,M,V	B, D	C, G	DAL2,IRC2,TEC
M8340109^2000%&	200		C,H,K,M,V	B, D, F, G, J	C, G	DAL2,IRC2,TEC
M8340109^2030%&	203		C,H,K,M,V	B, D	C, G	DAL2,IRC2,TEC
M8340109^2050%&	205	See PN Ordering Section	C,H,K,M,V	B, D, F	C, G	DAL2,IRC2,TEC
M8340109^2080%&	208		C,H,K,M,V	B, D	C, G	DAL2,IRC2,TEC
M8340109^2100%&	210		C,H,K,M,V	B, D, F	C, G	DAL2,IRC2,TEC
M8340109^2130%&	213		C,H,K,M,V	B, D	C, G	DAL2,IRC2,TEC
M8340109^2150%&	215		C,H,K,M,V	B, D, F	C, G	DAL2,IRC2,TEC
M8340109^2180%&	218	See PN Ordering Section	C,H,K,M,V	B, D	C, G	DAL2,IRC2,TEC

M8340109^2200%&	220		C,H,K,M,V	G, J	C, G	DAL2,IRC2,TEC
M8340109^2210%&	221		C,H,K,M,V	B, D, F	C, G	DAL2,IRC2,TEC
M8340109^2230%&	223		C,H,K,M,V	B, D	C, G	DAL2,IRC2,TEC
M8340109^2260%&	226		C,H,K,M,V	B, D, F	C, G	DAL2,IRC2,TEC
	Resistance	Power	Char.	Res.		
Part Number	Value (Ohms)	Rating	(^)	Tolerance	Schematic	Manufacturer
M8340109^2290%&	229	See PN Ordering Section	C,H,K,M,V	B, D	C, G	DAL2,IRC2,TEC
M8340109^2320%&	232		C,H,K,M,V	B, D, F	C, G	DAL2,IRC2,TEC
M8340109^2340%&	234		C,H,K,M,V	B, D	C, G	DAL2,IRC2,TEC
M8340109^2370%&	237		C,H,K,M,V	B, D, F	C, G	DAL2,IRC2,TEC
M8340109^2400%&	240		C,H,K,M,V	B, D, F, G, J	C, G	DAL2,IRC2,TEC
M8340109^2430%&	243	See PN Ordering Section	C,H,K,M,V	B, D, F	C, G	DAL2,IRC2,TEC
M8340109^2460%&	246		C,H,K,M,V	B, D	C, G	DAL2,IRC2,TEC
M8340109^2490%&	249		C,H,K,M,V	B, D, F	C, G	DAL2,IRC2,TEC
M8340109^2520%&	252		C,H,K,M,V	B, D	C, G	DAL2,IRC2,TEC
M8340109^2550%&	255		C,H,K,M,V	B, D, F	C, G	DAL2,IRC2,TEC
M8340109^2580%&	258	See PN Ordering Section	C,H,K,M,V	B, D	C, G	DAL2,IRC2,TEC
M8340109^2610%&	261		C,H,K,M,V	B, D, F	C, G	DAL2,IRC2,TEC
M8340109^2640%&	264		C,H,K,M,V	B, D	C, G	DAL2,IRC2,TEC
M8340109^2670%&	267		C,H,K,M,V	B, D, F	C, G	DAL2,IRC2,TEC
	Resistance	Power	Char.	Res.		
Part Number	Value (Ohms)	Rating	(^)	Tolerance	Schematic	Manufacturer
M8340109^2700%&	270		C,H,K,M,V	G, J	C, G	DAL2,IRC2,TEC
M8340109^2710%&	271	See PN Ordering Section	C,H,K,M,V	B, D	C, G	DAL2,IRC2,TEC
M8340109^2740%&	274		C,H,K,M,V	B, D, F	C, G	DAL2,IRC2,TEC
M8340109^2770%&	277		C,H,K,M,V	B, D	C, G	DAL2,IRC2,TEC
M8340109^2800%&	280		C,H,K,M,V	B, D, F	C, G	DAL2,IRC2,TEC
M8340109^2840%&	284		C,H,K,M,V	B, D	C, G	DAL2,IRC2,TEC
M8340109^2870%&	287	See PN Ordering Section	C,H,K,M,V	B, D, F	C, G	DAL2,IRC2,TEC
M8340109^2910%&	291		C,H,K,M,V	B, D	C, G	DAL2,IRC2,TEC
M8340109^2940%&	294		C,H,K,M,V	B, D, F	C, G	DAL2,IRC2,TEC
M8340109^2980%&	298		C,H,K,M,V	B, D	C, G	DAL2,IRC2,TEC
M8340109^3000%&	300		C,H,K,M,V	G, J	C, G	DAL2,IRC2,TEC
M8340109^3010%&	301	See PN Ordering Section	C,H,K,M,V	B, D, F	C, G	DAL2,IRC2,TEC
M8340109^3050%&	305		C,H,K,M,V	B, D	C, G	DAL2,IRC2,TEC
M8340109^3090%&	309		C,H,K,M,V	B, D, F	C, G	DAL2,IRC2,TEC
	Resistance	Power	Char.	Res.		
Part Number	Value (Ohms)	Rating	(^)	Tolerance	Schematic	Manufacturer
M8340109^3120%&	312		C,H,K,M,V	B, D	C, G	DAL2,IRC2,TEC
M8340109^3160%&	316		C,H,K,M,V	B, D, F	C, G	DAL2,IRC2,TEC
M8340109^3200%&	320	See PN Ordering Section	C,H,K,M,V	B, D	C, G	DAL2,IRC2,TEC
M8340109^3240%&	324		C,H,K,M,V	B, D, F	C, G	DAL2,IRC2,TEC
M8340109^3280%&	328		C,H,K,M,V	B, D	C, G	DAL2,IRC2,TEC
M8340109^3300%&	330		C,H,K,M,V	G, J	C, G	DAL2,IRC2,TEC
M8340109^3320%&	332		C,H,K,M,V	B, D, F	C, G	DAL2,IRC2,TEC
M8340109^3360%&	336	See PN Ordering Section	C,H,K,M,V	B, D	C, G	DAL2,IRC2,TEC
M8340109^3400%&	340		C,H,K,M,V	B, D, F	C, G	DAL2,IRC2,TEC

M8340109^3440%&	344		C,H,K,M,V	B, D	C, G	DAL2,IRC2,TEC
M8340109^3480%&	348		C,H,K,M,V	B, D, F	C, G	DAL2,IRC2,TEC
M8340109^3520%&	352		C,H,K,M,V	B, D	C, G	DAL2,IRC2,TEC
M8340109^3570%&	357	See PN Ordering Section	C,H,K,M,V	B, D, F	C, G	DAL2,IRC2,TEC
M8340109^3600%&	360		C,H,K,M,V	G, J	C, G	DAL2,IRC2,TEC
	Resistance	Power	Char.	Res.		
Part Number	Value (Ohms)	Rating	(^)	Tolerance	Schematic	Manufacturer
M8340109^3610%&	361		C,H,K,M,V	B, D	C, G	DAL2,IRC2,TEC
M8340109^3650%&	365		C,H,K,M,V	B, D, F	C, G	DAL2,IRC2,TEC
M8340109^3700%&	370		C,H,K,M,V	B, D	C, G	DAL2,IRC2,TEC
M8340109^3740%&	374	See PN Ordering Section	C,H,K,M,V	B, D, F	C, G	DAL2,IRC2,TEC
M8340109^3790%&	379		C,H,K,M,V	B, D	C, G	DAL2,IRC2,TEC
M8340109^3830%&	383		C,H,K,M,V	B, D, F	C, G	DAL2,IRC2,TEC
M8340109^3880%&	388		C,H,K,M,V	B, D	C, G	DAL2,IRC2,TEC
M8340109^3900%&	390		C,H,K,M,V	G, J	C, G	DAL2,IRC2,TEC
M8340109^3920%&	392	See PN Ordering Section	C,H,K,M,V	B, D, F	C, G	DAL2,IRC2,TEC
M8340109^3970%&	397		C,H,K,M,V	B, D	C, G	DAL2,IRC2,TEC
M8340109^4020%&	402		C,H,K,M,V	B, D, F	C, G	DAL2,IRC2,TEC
M8340109^4070%&	407		C,H,K,M,V	B, D	C, G	DAL2,IRC2,TEC
M8340109^4120%&	412		C,H,K,M,V	B, D, F	C, G	DAL2,IRC2,TEC
M8340109^4170%&	417	See PN Ordering Section	C,H,K,M,V	B, D	C, G	DAL2,IRC2,TEC
	Resistance	Power	Char.	Res.		
Part Number	Value (Ohms)	Rating	(^)	Tolerance	Schematic	Manufacturer
M8340109^4220%&	422		C,H,K,M,V	B, D, F	C, G	DAL2,IRC2,TEC
M8340109^4270%&	427		C,H,K,M,V	B, D	C, G	DAL2,IRC2,TEC
M8340109^4300%&	430		C,H,K,M,V	G, J	C, G	DAL2,IRC2,TEC
M8340109^4320%&	432		C,H,K,M,V	B, D, F	C, G	DAL2,IRC2,TEC
M8340109^4370%&	437	See PN Ordering Section	C,H,K,M,V	B, D	C, G	DAL2,IRC2,TEC
M8340109^4420%&	442		C,H,K,M,V	B, D, F	C, G	DAL2,IRC2,TEC
M8340109^4480%&	448		C,H,K,M,V	B, D	C, G	DAL2,IRC2,TEC
M8340109^4530%&	453		C,H,K,M,V	B, D, F	C, G	DAL2,IRC2,TEC
M8340109^4590%&	459		C,H,K,M,V	B, D	C, G	DAL2,IRC2,TEC
M8340109^4640%&	464	See PN Ordering Section	C,H,K,M,V	B, D, F	C, G	DAL2,IRC2,TEC
M8340109^4700%&	470		C,H,K,M,V	B, D, G, J	C, G	DAL2,IRC2,TEC
M8340109^4750%&	475		C,H,K,M,V	B, D, F	C, G	DAL2,IRC2,TEC
M8340109^4810%&	481		C,H,K,M,V	B, D	C, G	DAL2,IRC2,TEC
M8340109^4870%&	487		C,H,K,M,V	B, D, F	C, G	DAL2,IRC2,TEC
	Resistance	Power	Char.	Res.		
Part Number	Value (Ohms)	Rating	(^)	Tolerance	Schematic	Manufacturer
M8340109^4930%&	493	See PN Ordering Section	C,H,K,M,V	B, D	C, G	DAL2,IRC2,TEC
M8340109^4990%&	499		C,H,K,M,V	B, D, F	C, G	DAL2,IRC2,TEC
M8340109^5050%&	505		C,H,K,M,V	B, D	C, G	DAL2,IRC2,TEC
M8340109^5100%&	510		C,H,K,M,V	G, J	C, G	DAL2,IRC2,TEC
M8340109^5110%&	511		C,H,K,M,V	B, D, F	C, G	DAL2,IRC2,TEC
M8340109^5170%&	517	See PN Ordering Section	C,H,K,M,V	B, D	C, G	DAL2,IRC2,TEC
M8340109^5230%&	523		C,H,K,M,V	B, D, F	C, G	DAL2,IRC2,TEC
M8340109^5300%&	530		C,H,K,M,V	B, D	C, G	DAL2,IRC2,TEC

M8340109^5360%&	536		C,H,K,M,V	B, D, F	C, G	DAL2,IRC2,TEC
M8340109^5420%&	542		C,H,K,M,V	B, D	C, G	DAL2,IRC2,TEC
M8340109^5490%&	549	See PN Ordering Section	C,H,K,M,V	B, D, F	C, G	DAL2,IRC2,TEC
M8340109^5560%&	556		C,H,K,M,V	B, D	C, G	DAL2,IRC2,TEC
M8340109^5600%&	560		C,H,K,M,V	G, J	C, G	DAL2,IRC2,TEC
M8340109^5620%&	562		C,H,K,M,V	B, D, F	C, G	DAL2,IRC2,TEC
	Resistance	Power	Char.	Res.		
Part Number	Value (Ohms)	Rating	(^)	Tolerance	Schematic	Manufacturer
M8340109^5690%&	569		C,H,K,M,V	B, D	C, G	DAL2,IRC2,TEC
M8340109^5760%&	576	See PN Ordering Section	C,H,K,M,V	B, D, F	C, G	DAL2,IRC2,TEC
M8340109^5830%&	583		C,H,K,M,V	B, D	C, G	DAL2,IRC2,TEC
M8340109^5900%&	590		C,H,K,M,V	B, D, F	C, G	DAL2,IRC2,TEC
M8340109^5970%&	597		C,H,K,M,V	B, D	C, G	DAL2,IRC2,TEC
M8340109^6040%&	604		C,H,K,M,V	B, D, F	C, G	DAL2,IRC2,TEC
M8340109^6120%&	612	See PN Ordering Section	C,H,K,M,V	B, D	C, G	DAL2,IRC2,TEC
M8340109^6190%&	619		C,H,K,M,V	B, D, F	C, G	DAL2,IRC2,TEC
M8340109^6200%&	620		C,H,K,M,V	G, J	C, G	DAL2,IRC2,TEC
M8340109^6260%&	626		C,H,K,M,V	B, D	C, G	DAL2,IRC2,TEC
M8340109^6340%&	634		C,H,K,M,V	B, D, F	C, G	DAL2,IRC2,TEC
M8340109^6420%&	642	See PN Ordering Section	C,H,K,M,V	B, D	C, G	DAL2,IRC2,TEC
M8340109^6490%&	649		C,H,K,M,V	B, D, F	C, G	DAL2,IRC2,TEC
M8340109^6570%&	657		C,H,K,M,V	B, D	C, G	DAL2,IRC2,TEC
	Resistance	Power	Char.	Res.		
Part Number	Value (Ohms)	Rating	(^)	Tolerance	Schematic	Manufacturer
M8340109^6650%&	665		C,H,K,M,V	B, D, F	C, G	DAL2,IRC2,TEC
M8340109^6730%&	673		C,H,K,M,V	B, D	C, G	DAL2,IRC2,TEC
M8340109^6800%&	680	See PN Ordering Section	C,H,K,M,V	G, J	C, G	DAL2,IRC2,TEC
M8340109^6810%&	681		C,H,K,M,V	B, D, F	C, G	DAL2,IRC2,TEC
M8340109^6900%&	690		C,H,K,M,V	B, D	C, G	DAL2,IRC2,TEC
M8340109^6980%&	698		C,H,K,M,V	B, D, F	C, G	DAL2,IRC2,TEC
M8340109^7060%&	706		C,H,K,M,V	B, D	C, G	DAL2,IRC2,TEC
M8340109^7150%&	715	See PN Ordering Section	C,H,K,M,V	B, D, F	C, G	DAL2,IRC2,TEC
M8340109^7230%&	723		C,H,K,M,V	B, D	C, G	DAL2,IRC2,TEC
M8340109^7320%&	732		C,H,K,M,V	B, D, F	C, G	DAL2,IRC2,TEC
M8340109^7410%&	741		C,H,K,M,V	B, D	C, G	DAL2,IRC2,TEC
M8340109^7500%&	750		C,H,K,M,V	B, D, F, G, J	C, G	DAL2,IRC2,TEC
M8340109^7590%&	759	See PN Ordering Section	C,H,K,M,V	B, D	C, G	DAL2,IRC2,TEC
M8340109^7680%&	768		C,H,K,M,V	B, D, F	C, G	DAL2,IRC2,TEC
	Resistance	Power	Char.	Res.		
Part Number	Value (Ohms)	Rating	(^)	Tolerance	Schematic	Manufacturer
M8340109^7770%&	777		C,H,K,M,V	B, D	C, G	DAL2,IRC2,TEC
M8340109^7870%&	787		C,H,K,M,V	B, D, F	C, G	DAL2,IRC2,TEC
M8340109^7960%&	796		C,H,K,M,V	B, D	C, G	DAL2,IRC2,TEC
M8340109^8060%&	806	See PN Ordering Section	C,H,K,M,V	B, D, F	C, G	DAL2,IRC2,TEC
M8340109^8160%&	816		C,H,K,M,V	B, D	C, G	DAL2,IRC2,TEC
M8340109^8200%&	820		C,H,K,M,V	G, J	C, G	DAL2,IRC2,TEC
M8340109^8250%&	825		C,H,K,M,V	B, D, F	C, G	DAL2,IRC2,TEC

M8340109^8350%&	835		C,H,K,M,V	B, D	C, G	DAL2,IRC2,TEC
M8340109^8450%&	845	See PN Ordering Section	C,H,K,M,V	B, D, F	C, G	DAL2,IRC2,TEC
M8340109^8560%&	856		C,H,K,M,V	B, D	C, G	DAL2,IRC2,TEC
M8340109^8660%&	866		C,H,K,M,V	B, D, F	C, G	DAL2,IRC2,TEC
M8340109^8760%&	876		C,H,K,M,V	B, D	C, G	DAL2,IRC2,TEC
M8340109^8870%&	887		C,H,K,M,V	B, D, F	C, G	DAL2,IRC2,TEC
M8340109^8980%&	898	See PN Ordering Section	C,H,K,M,V	B, D	C, G	DAL2,IRC2,TEC
	Resistance	Power	Char.	Res.		
Part Number	Value (Ohms)	Rating	(^)	Tolerance	Schematic	Manufacturer
M8340109^9090%&	909		C,H,K,M,V	B, D, F	C, G	DAL2,IRC2,TEC
M8340109^9100%&	910		C,H,K,M,V	G, J	C, G	DAL2,IRC2,TEC
M8340109^9200%&	920		C,H,K,M,V	B, D	C, G	DAL2,IRC2,TEC
M8340109^9310%&	931		C,H,K,M,V	B, D, F	C, G	DAL2,IRC2,TEC
M8340109^9420%&	942	See PN Ordering Section	C,H,K,M,V	B, D	C, G	DAL2,IRC2,TEC
M8340109^9530%&	953		C,H,K,M,V	B, D, F	C, G	DAL2,IRC2,TEC
M8340109^9650%&	965		C,H,K,M,V	B, D	C, G	DAL2,IRC2,TEC
M8340109^9760%&	976		C,H,K,M,V	B, D, F	C, G	DAL2,IRC2,TEC
M8340109^9880%&	988		C,H,K,M,V	B, D	C, G	DAL2,IRC2,TEC

MIL-PRF-83401/9 (RZ090) Film Resistor Networks: 1,000 Ohms Through 9,880 Ohms

	Resistance	Power	Char.	Res.		
Part Number	Value (Ohms)	Rating	(^)	Tolerance	Schematic	Manufacturer
M8340109^1001%&	1,000	See PN Ordering Section	C,H,K,M,V	B, D, F, G, J	C, G	DAL2,IRC2,TEC
M8340109^1011%&	1,010		C,H,K,M,V	B, D	C, G	DAL2,IRC2,TEC
M8340109^1021%&	1,020		C,H,K,M,V	B, D, F	C, G	DAL2,IRC2,TEC
M8340109^1041%&	1,040		C,H,K,M,V	B, D	C, G	DAL2,IRC2,TEC
M8340109^1051%&	1,050		C,H,K,M,V	B, D, F	C, G	DAL2,IRC2,TEC
M8340109^1061%&	1,060	See PN Ordering Section	C,H,K,M,V	B, D	C, G	DAL2,IRC2,TEC
M8340109^1071%&	1,070		C,H,K,M,V	B, D, F	C, G	DAL2,IRC2,TEC
M8340109^1091%&	1,090		C,H,K,M,V	B, D	C, G	DAL2,IRC2,TEC
M8340109^1101%&	1,100		C,H,K,M,V	B, D, F, G, J	C, G	DAL2,IRC2,TEC
M8340109^1111%&	1,110		C,H,K,M,V	B, D	C, G	DAL2,IRC2,TEC
M8340109^1131%&	1,130	See PN Ordering Section	C,H,K,M,V	B, D, F	C, G	DAL2,IRC2,TEC
M8340109^1141%&	1,140		C,H,K,M,V	B, D	C, G	DAL2,IRC2,TEC
M8340109^1151%&	1,150		C,H,K,M,V	B, D, F	C, G	DAL2,IRC2,TEC
M8340109^1171%&	1,170		C,H,K,M,V	B, D	C, G	DAL2,IRC2,TEC
	Resistance	Power	Char.	Res.		
Part Number	Value (Ohms)	Rating	(^)	Tolerance	Schematic	Manufacturer
M8340109^1181%&	1,180		C,H,K,M,V	B, D, F	C, G	DAL2,IRC2,TEC
M8340109^1201%&	1,200	See PN Ordering Section	C,H,K,M,V	B, D, F, G, J	C, G	DAL2,IRC2,TEC
M8340109^1211%&	1,210		C,H,K,M,V	B, D, F	C, G	DAL2,IRC2,TEC
M8340109^1231%&	1,230		C,H,K,M,V	B, D	C, G	DAL2,IRC2,TEC
M8340109^1241%&	1,240		C,H,K,M,V	B, D, F	C, G	DAL2,IRC2,TEC
M8340109^1261%&	1,260		C,H,K,M,V	B, D	C, G	DAL2,IRC2,TEC

M8340109^1271%&	1,270	See PN Ordering Section	C,H,K,M,V	B, D, F	C, G	DAL2,IRC2,TEC
M8340109^1291%&	1,290		C,H,K,M,V	B, D	C, G	DAL2,IRC2,TEC
M8340109^1301%&	1,300		C,H,K,M,V	B, D, F, G, J	C, G	DAL2,IRC2,TEC
M8340109^1321%&	1,320		C,H,K,M,V	B, D	C, G	DAL2,IRC2,TEC
M8340109^1331%&	1,330		C,H,K,M,V	B, D, F	C, G	DAL2,IRC2,TEC
M8340109^1351%&	1,350	See PN Ordering Section	C,H,K,M,V	B, D	C, G	DAL2,IRC2,TEC
M8340109^1371%&	1,370		C,H,K,M,V	B, D, F	C, G	DAL2,IRC2,TEC
M8340109^1381%&	1,380		C,H,K,M,V	B, D	C, G	DAL2,IRC2,TEC
	Resistance	Power	Char.	Res.		
Part Number	Value (Ohms)	Rating	(^)	Tolerance	Schematic	Manufacturer
M8340109^1401%&	1,400		C,H,K,M,V	B, D, F	C, G	DAL2,IRC2,TEC
M8340109^1421%&	1,420		C,H,K,M,V	B, D	C, G	DAL2,IRC2,TEC
M8340109^1431%&	1,430	See PN Ordering Section	C,H,K,M,V	B, D, F	C, G	DAL2,IRC2,TEC
M8340109^1451%&	1,450		C,H,K,M,V	B, D	C, G	DAL2,IRC2,TEC
M8340109^1471%&	1,470		C,H,K,M,V	B, D, F	C, G	DAL2,IRC2,TEC
M8340109^1491%&	1,490		C,H,K,M,V	B, D	C, G	DAL2,IRC2,TEC
M8340109^1501%&	1,500		C,H,K,M,V	B, D, F, G, J	C, G	DAL2,IRC2,TEC
M8340109^1521%&	1,520	See PN Ordering Section	C,H,K,M,V	B, D	C, G	DAL2,IRC2,TEC
M8340109^1541%&	1,540		C,H,K,M,V	B, D, F	C, G	DAL2,IRC2,TEC
M8340109^1561%&	1,560		C,H,K,M,V	B, D	C, G	DAL2,IRC2,TEC
M8340109^1581%&	1,580		C,H,K,M,V	B, D, F	C, G	DAL2,IRC2,TEC
M8340109^1601%&	1,600		C,H,K,M,V	B, D, G, J	C, G	DAL2,IRC2,TEC
M8340109^1621%&	1,620	See PN Ordering Section	C,H,K,M,V	B, D, F	C, G	DAL2,IRC2,TEC
M8340109^1641%&	1,640		C,H,K,M,V	B, D	C, G	DAL2,IRC2,TEC
	Resistance	Power	Char.	Res.		
Part Number	Value (Ohms)	Rating	(^)	Tolerance	Schematic	Manufacturer
M8340109^1651%&	1,650		C,H,K,M,V	B, D, F	C, G	DAL2,IRC2,TEC
M8340109^1671%&	1,670		C,H,K,M,V	B, D	C, G	DAL2,IRC2,TEC
M8340109^1691%&	1,690		C,H,K,M,V	B, D, F	C, G	DAL2,IRC2,TEC
M8340109^1721%&	1,720	See PN Ordering Section	C,H,K,M,V	B, D	C, G	DAL2,IRC2,TEC
M8340109^1741%&	1,740		C,H,K,M,V	B, D, F	C, G	DAL2,IRC2,TEC
M8340109^1761%&	1,760		C,H,K,M,V	B, D	C, G	DAL2,IRC2,TEC
M8340109^1781%&	1,780		C,H,K,M,V	B, D, F	C, G	DAL2,IRC2,TEC
M8340109^1801%&	1,800		C,H,K,M,V	B, D, G, J	C, G	DAL2,IRC2,TEC
M8340109^1821%&	1,820	See PN Ordering Section	C,H,K,M,V	B, D, F	C, G	DAL2,IRC2,TEC
M8340109^1841%&	1,840		C,H,K,M,V	B, D	C, G	DAL2,IRC2,TEC
M8340109^1871%&	1,870		C,H,K,M,V	B, D, F	C, G	DAL2,IRC2,TEC
M8340109^1891%&	1,890		C,H,K,M,V	B, D	C, G	DAL2,IRC2,TEC
M8340109^1911%&	1,910		C,H,K,M,V	B, D, F	C, G	DAL2,IRC2,TEC
M8340109^1931%&	1,930	See PN Ordering Section	C,H,K,M,V	B, D	C, G	DAL2,IRC2,TEC
	Resistance	Power	Char.	Res.		
Part Number	Value (Ohms)	Rating	(^)	Tolerance	Schematic	Manufacturer
M8340109^1961%&	1,960		C,H,K,M,V	B, D, F	C, G	DAL2,IRC2,TEC
M8340109^1981%&	1,980		C,H,K,M,V	B, D	C, G	DAL2,IRC2,TEC
M8340109^2001%&	2,000		C,H,K,M,V	B, D, F, G, J	C, G	DAL2,IRC2,TEC
M8340109^2031%&	2,030		C,H,K,M,V	B, D	C, G	DAL2,IRC2,TEC
M8340109^2051%&	2,050	See PN Ordering Section	C,H,K,M,V	B, D, F	C, G	DAL2,IRC2,TEC

M8340109^2081%&	2,080		C,H,K,M,V	B, D	C, G	DAL2,IRC2,TEC
M8340109^2101%&	2,100		C,H,K,M,V	B, D, F	C, G	DAL2,IRC2,TEC
M8340109^2131%&	2,130		C,H,K,M,V	B, D	C, G	DAL2,IRC2,TEC
M8340109^2151%&	2,150		C,H,K,M,V	B, D, F	C, G	DAL2,IRC2,TEC
M8340109^2181%&	2,180	See PN Ordering Section	C,H,K,M,V	B, D	C, G	DAL2,IRC2,TEC
M8340109^2201%&	2,200		C,H,K,M,V	G, J	C, G	DAL2,IRC2,TEC
M8340109^2211%&	2,210		C,H,K,M,V	B, D, F	C, G	DAL2,IRC2,TEC
M8340109^2231%&	2,230		C,H,K,M,V	B, D	C, G	DAL2,IRC2,TEC
M8340109^2261%&	2,260		C,H,K,M,V	B, D, F	C, G	DAL2,IRC2,TEC
	Resistance	Power	Char.	Res.		
Part Number	Value (Ohms)	Rating	(^)	Tolerance	Schematic	Manufacturer
M8340109^2291%&	2,290	See PN Ordering Section	C,H,K,M,V	B, D	C, G	DAL2,IRC2,TEC
M8340109^2321%&	2,320		C,H,K,M,V	B, D, F	C, G	DAL2,IRC2,TEC
M8340109^2341%&	2,340		C,H,K,M,V	B, D	C, G	DAL2,IRC2,TEC
M8340109^2371%&	2,370		C,H,K,M,V	B, D, F	C, G	DAL2,IRC2,TEC
M8340109^2401%&	2,400		C,H,K,M,V	B, D, F, G, J	C, G	DAL2,IRC2,TEC
M8340109^2431%&	2,430	See PN Ordering Section	C,H,K,M,V	B, D, F	C, G	DAL2,IRC2,TEC
M8340109^2461%&	2,460		C,H,K,M,V	B, D	C, G	DAL2,IRC2,TEC
M8340109^2491%&	2,490		C,H,K,M,V	B, D, F	C, G	DAL2,IRC2,TEC
M8340109^2521%&	2,520		C,H,K,M,V	B, D	C, G	DAL2,IRC2,TEC
M8340109^2551%&	2,550		C,H,K,M,V	B, D, F	C, G	DAL2,IRC2,TEC
M8340109^2581%&	2,580	See PN Ordering Section	C,H,K,M,V	B, D	C, G	DAL2,IRC2,TEC
M8340109^2611%&	2,610		C,H,K,M,V	B, D, F	C, G	DAL2,IRC2,TEC
M8340109^2641%&	2,640		C,H,K,M,V	B, D	C, G	DAL2,IRC2,TEC
M8340109^2671%&	2,670		C,H,K,M,V	B, D, F	C, G	DAL2,IRC2,TEC
	Resistance	Power	Char.	Res.		
Part Number	Value (Ohms)	Rating	(^)	Tolerance	Schematic	Manufacturer
M8340109^2701%&	2,700		C,H,K,M,V	G, J	C, G	DAL2,IRC2,TEC
M8340109^2711%&	2,710	See PN Ordering Section	C,H,K,M,V	B, D	C, G	DAL2,IRC2,TEC
M8340109^2741%&	2,740		C,H,K,M,V	B, D, F	C, G	DAL2,IRC2,TEC
M8340109^2771%&	2,770		C,H,K,M,V	B, D	C, G	DAL2,IRC2,TEC
M8340109^2801%&	2,800		C,H,K,M,V	B, D, F	C, G	DAL2,IRC2,TEC
M8340109^2841%&	2,840		C,H,K,M,V	B, D	C, G	DAL2,IRC2,TEC
M8340109^2871%&	2,870	See PN Ordering Section	C,H,K,M,V	B, D, F	C, G	DAL2,IRC2,TEC
M8340109^2911%&	2,910		C,H,K,M,V	B, D	C, G	DAL2,IRC2,TEC
M8340109^2941%&	2,940		C,H,K,M,V	B, D, F	C, G	DAL2,IRC2,TEC
M8340109^2981%&	2,980		C,H,K,M,V	B, D	C, G	DAL2,IRC2,TEC
M8340109^3001%&	3,000		C,H,K,M,V	G, J	C, G	DAL2,IRC2,TEC
M8340109^3011%&	3,010	See PN Ordering Section	C,H,K,M,V	B, D, F	C, G	DAL2,IRC2,TEC
M8340109^3051%&	3,050		C,H,K,M,V	B, D	C, G	DAL2,IRC2,TEC
M8340109^3091%&	3,090		C,H,K,M,V	B, D, F	C, G	DAL2,IRC2,TEC
	Resistance	Power	Char.	Res.		
Part Number	Value (Ohms)	Rating	(^)	Tolerance	Schematic	Manufacturer
M8340109^3121%&	3,120		C,H,K,M,V	B, D	C, G	DAL2,IRC2,TEC
M8340109^3161%&	3,160		C,H,K,M,V	B, D, F	C, G	DAL2,IRC2,TEC
M8340109^3201%&	3,200	See PN Ordering Section	C,H,K,M,V	B, D	C, G	DAL2,IRC2,TEC
M8340109^3241%&	3,240		C,H,K,M,V	B, D, F	C, G	DAL2,IRC2,TEC

M8340109^3281%&	3,280		C,H,K,M,V	B, D	C, G	DAL2,IRC2,TEC
M8340109^3301%&	3,300		C,H,K,M,V	G, J	C, G	DAL2,IRC2,TEC
M8340109^3321%&	3,320		C,H,K,M,V	B, D, F	C, G	DAL2,IRC2,TEC
M8340109^3361%&	3,360	See PN Ordering Section	C,H,K,M,V	B, D	C, G	DAL2,IRC2,TEC
M8340109^3401%&	3,400		C,H,K,M,V	B, D, F	C, G	DAL2,IRC2,TEC
M8340109^3441%&	3,440		C,H,K,M,V	B, D	C, G	DAL2,IRC2,TEC
M8340109^3481%&	3,480		C,H,K,M,V	B, D, F	C, G	DAL2,IRC2,TEC
M8340109^3521%&	3,520		C,H,K,M,V	B, D	C, G	DAL2,IRC2,TEC
M8340109^3571%&	3,570	See PN Ordering Section	C,H,K,M,V	B, D, F	C, G	DAL2,IRC2,TEC
M8340109^3601%&	3,600		C,H,K,M,V	G, J	C, G	DAL2,IRC2,TEC
	Resistance	Power	Char.	Res.		
Part Number	Value (Ohms)	Rating	(^)	Tolerance	Schematic	Manufacturer
M8340109^3611%&	3,610		C,H,K,M,V	B, D	C, G	DAL2,IRC2,TEC
M8340109^3651%&	3,650		C,H,K,M,V	B, D, F	C, G	DAL2,IRC2,TEC
M8340109^3701%&	3,700		C,H,K,M,V	B, D	C, G	DAL2,IRC2,TEC
M8340109^3741%&	3,740	See PN Ordering Section	C,H,K,M,V	B, D, F	C, G	DAL2,IRC2,TEC
M8340109^3791%&	3,790		C,H,K,M,V	B, D	C, G	DAL2,IRC2,TEC
M8340109^3831%&	3,830		C,H,K,M,V	B, D, F	C, G	DAL2,IRC2,TEC
M8340109^3881%&	3,880		C,H,K,M,V	B, D	C, G	DAL2,IRC2,TEC
M8340109^3901%&	3,900		C,H,K,M,V	G, J	C, G	DAL2,IRC2,TEC
M8340109^3921%&	3,920	See PN Ordering Section	C,H,K,M,V	B, D, F	C, G	DAL2,IRC2,TEC
M8340109^3971%&	3,970		C,H,K,M,V	B, D	C, G	DAL2,IRC2,TEC
M8340109^4021%&	4,020		C,H,K,M,V	B, D, F	C, G	DAL2,IRC2,TEC
M8340109^4071%&	4,070		C,H,K,M,V	B, D	C, G	DAL2,IRC2,TEC
M8340109^4121%&	4,120		C,H,K,M,V	B, D, F	C, G	DAL2,IRC2,TEC
M8340109^4171%&	4,170	See PN Ordering Section	C,H,K,M,V	B, D	C, G	DAL2,IRC2,TEC
	Resistance	Power	Char.	Res.		
Part Number	Value (Ohms)	Rating	(^)	Tolerance	Schematic	Manufacturer
M8340109^4221%&	4,220		C,H,K,M,V	B, D, F	C, G	DAL2,IRC2,TEC
M8340109^4271%&	4,270		C,H,K,M,V	B, D	C, G	DAL2,IRC2,TEC
M8340109^4301%&	4,300		C,H,K,M,V	G, J	C, G	DAL2,IRC2,TEC
M8340109^4321%&	4,320		C,H,K,M,V	B, D, F	C, G	DAL2,IRC2,TEC
M8340109^4371%&	4,370	See PN Ordering Section	C,H,K,M,V	B, D	C, G	DAL2,IRC2,TEC
M8340109^4421%&	4,420		C,H,K,M,V	B, D, F	C, G	DAL2,IRC2,TEC
M8340109^4481%&	4,480		C,H,K,M,V	B, D	C, G	DAL2,IRC2,TEC
M8340109^4531%&	4,530		C,H,K,M,V	B, D, F	C, G	DAL2,IRC2,TEC
M8340109^4591%&	4,590		C,H,K,M,V	B, D	C, G	DAL2,IRC2,TEC
M8340109^4641%&	4,640	See PN Ordering Section	C,H,K,M,V	B, D, F	C, G	DAL2,IRC2,TEC
M8340109^4701%&	4,700		C,H,K,M,V	B, D, G, J	C, G	DAL2,IRC2,TEC
M8340109^4751%&	4,750		C,H,K,M,V	B, D, F	C, G	DAL2,IRC2,TEC
M8340109^4811%&	4,810		C,H,K,M,V	B, D	C, G	DAL2,IRC2,TEC
M8340109^4871%&	4,870		C,H,K,M,V	B, D, F	C, G	DAL2,IRC2,TEC
	Resistance	Power	Char.	Res.		
Part Number	Value (Ohms)	Rating	(^)	Tolerance	Schematic	Manufacturer
M8340109^4931%&	4,930	See PN Ordering Section	C,H,K,M,V	B, D	C, G	DAL2,IRC2,TEC
M8340109^4991%&	4,990		C,H,K,M,V	B, D, F	C, G	DAL2,IRC2,TEC
M8340109^5051%&	5,050		C,H,K,M,V	B, D	C, G	DAL2,IRC2,TEC

M8340109^5101%&	5,100		C,H,K,M,V	G, J	C, G	DAL2,IRC2,TEC
M8340109^5111%&	5,110		C,H,K,M,V	B, D, F	C, G	DAL2,IRC2,TEC
M8340109^5171%&	5,170	See PN Ordering Section	C,H,K,M,V	B, D	C, G	DAL2,IRC2,TEC
M8340109^5231%&	5,230		C,H,K,M,V	B, D, F	C, G	DAL2,IRC2,TEC
M8340109^5301%&	5,300		C,H,K,M,V	B, D	C, G	DAL2,IRC2,TEC
M8340109^5361%&	5,360		C,H,K,M,V	B, D, F	C, G	DAL2,IRC2,TEC
M8340109^5421%&	5,420		C,H,K,M,V	B, D	C, G	DAL2,IRC2,TEC
M8340109^5491%&	5,490	See PN Ordering Section	C,H,K,M,V	B, D, F	C, G	DAL2,IRC2,TEC
M8340109^5561%&	5,560		C,H,K,M,V	B, D	C, G	DAL2,IRC2,TEC
M8340109^5601%&	5,600		C,H,K,M,V	G, J	C, G	DAL2,IRC2,TEC
M8340109^5621%&	5,620		C,H,K,M,V	B, D, F	C, G	DAL2,IRC2,TEC
	Resistance	Power	Char.	Res.		
Part Number	Value (Ohms)	Rating	(^)	Tolerance	Schematic	Manufacturer
M8340109^5691%&	5,690		C,H,K,M,V	B, D	C, G	DAL2,IRC2,TEC
M8340109^5761%&	5,760	See PN Ordering Section	C,H,K,M,V	B, D, F	C, G	DAL2,IRC2,TEC
M8340109^5831%&	5,830		C,H,K,M,V	B, D	C, G	DAL2,IRC2,TEC
M8340109^5901%&	5,900		C,H,K,M,V	B, D, F	C, G	DAL2,IRC2,TEC
M8340109^5971%&	5,970		C,H,K,M,V	B, D	C, G	DAL2,IRC2,TEC
M8340109^6041%&	6,040		C,H,K,M,V	B, D, F	C, G	DAL2,IRC2,TEC
M8340109^6121%&	6,120	See PN Ordering Section	C,H,K,M,V	B, D	C, G	DAL2,IRC2,TEC
M8340109^6191%&	6,190		C,H,K,M,V	B, D, F	C, G	DAL2,IRC2,TEC
M8340109^6201%&	6,200		C,H,K,M,V	G, J	C, G	DAL2,IRC2,TEC
M8340109^6261%&	6,260		C,H,K,M,V	B, D	C, G	DAL2,IRC2,TEC
M8340109^6341%&	6,340		C,H,K,M,V	B, D, F	C, G	DAL2,IRC2,TEC
M8340109^6421%&	6,420	See PN Ordering Section	C,H,K,M,V	B, D	C, G	DAL2,IRC2,TEC
M8340109^6491%&	6,490		C,H,K,M,V	B, D, F	C, G	DAL2,IRC2,TEC
M8340109^6571%&	6,570		C,H,K,M,V	B, D	C, G	DAL2,IRC2,TEC
	Resistance	Power	Char.	Res.		
Part Number	Value (Ohms)	Rating	(^)	Tolerance	Schematic	Manufacturer
M8340109^6651%&	6,650		C,H,K,M,V	B, D, F	C, G	DAL2,IRC2,TEC
M8340109^6731%&	6,730		C,H,K,M,V	B, D	C, G	DAL2,IRC2,TEC
M8340109^6801%&	6,800	See PN Ordering Section	C,H,K,M,V	G, J	C, G	DAL2,IRC2,TEC
M8340109^6811%&	6,810		C,H,K,M,V	B, D, F	C, G	DAL2,IRC2,TEC
M8340109^6901%&	6,900		C,H,K,M,V	B, D	C, G	DAL2,IRC2,TEC
M8340109^6981%&	6,980		C,H,K,M,V	B, D, F	C, G	DAL2,IRC2,TEC
M8340109^7061%&	7,060		C,H,K,M,V	B, D	C, G	DAL2,IRC2,TEC
M8340109^7151%&	7,150	See PN Ordering Section	C,H,K,M,V	B, D, F	C, G	DAL2,IRC2,TEC
M8340109^7231%&	7,230		C,H,K,M,V	B, D	C, G	DAL2,IRC2,TEC
M8340109^7321%&	7,320		C,H,K,M,V	B, D, F	C, G	DAL2,IRC2,TEC
M8340109^7411%&	7,410		C,H,K,M,V	B, D	C, G	DAL2,IRC2,TEC
M8340109^7501%&	7,500		C,H,K,M,V	B, D, F, G, J	C, G	DAL2,IRC2,TEC
M8340109^7591%&	7,590	See PN Ordering Section	C,H,K,M,V	B, D	C, G	DAL2,IRC2,TEC
M8340109^7681%&	7,680		C,H,K,M,V	B, D, F	C, G	DAL2,IRC2,TEC
	Resistance	Power	Char.	Res.		
Part Number	Value (Ohms)	Rating	(^)	Tolerance	Schematic	Manufacturer
M8340109^7771%&	7,770		C,H,K,M,V	B, D	C, G	DAL2,IRC2,TEC
M8340109^7871%&	7,870		C,H,K,M,V	B, D, F	C, G	DAL2,IRC2,TEC

M8340109^7961%&	7,960		C,H,K,M,V	B, D	C, G	DAL2,IRC2,TEC
M8340109^8061%&	8,060	See PN Ordering Section	C,H,K,M,V	B, D, F	C, G	DAL2,IRC2,TEC
M8340109^8161%&	8,160		C,H,K,M,V	B, D	C, G	DAL2,IRC2,TEC
M8340109^8201%&	8,200		C,H,K,M,V	G, J	C, G	DAL2,IRC2,TEC
M8340109^8251%&	8,250		C,H,K,M,V	B, D, F	C, G	DAL2,IRC2,TEC
M8340109^8351%&	8,350		C,H,K,M,V	B, D	C, G	DAL2,IRC2,TEC
M8340109^8451%&	8,450	See PN Ordering Section	C,H,K,M,V	B, D, F	C, G	DAL2,IRC2,TEC
M8340109^8561%&	8,560		C,H,K,M,V	B, D	C, G	DAL2,IRC2,TEC
M8340109^8661%&	8,660		C,H,K,M,V	B, D, F	C, G	DAL2,IRC2,TEC
M8340109^8761%&	8,760		C,H,K,M,V	B, D	C, G	DAL2,IRC2,TEC
M8340109^8871%&	8,870		C,H,K,M,V	B, D, F	C, G	DAL2,IRC2,TEC
M8340109^8981%&	8,980	See PN Ordering Section	C,H,K,M,V	B, D	C, G	DAL2,IRC2,TEC
	Resistance	Power	Char.	Res.		
Part Number	Value (Ohms)	Rating	(^)	Tolerance	Schematic	Manufacturer
M8340109^9091%&	9,090		C,H,K,M,V	B, D, F	C, G	DAL2,IRC2,TEC
M8340109^9101%&	9,100		C,H,K,M,V	G, J	C, G	DAL2,IRC2,TEC
M8340109^9201%&	9,200		C,H,K,M,V	B, D	C, G	DAL2,IRC2,TEC
M8340109^9311%&	9,310		C,H,K,M,V	B, D, F	C, G	DAL2,IRC2,TEC
M8340109^9421%&	9,420	See PN Ordering Section	C,H,K,M,V	B, D	C, G	DAL2,IRC2,TEC
M8340109^9531%&	9,530		C,H,K,M,V	B, D, F	C, G	DAL2,IRC2,TEC
M8340109^9651%&	9,650		C,H,K,M,V	B, D	C, G	DAL2,IRC2,TEC
M8340109^9761%&	9,760		C,H,K,M,V	B, D, F	C, G	DAL2,IRC2,TEC
M8340109^9881%&	9,880		C,H,K,M,V	B, D	C, G	DAL2,IRC2,TEC

MIL-PRF-83401/9 (RZ090) Film Resistor Networks: 10,000 Ohms Through 98,800 Ohms

	Resistance	Power	Char.	Res.		
Part Number	Value (Ohms)	Rating	(^)	Tolerance	Schematic	Manufacturer
M8340109^1002%&	10,000	See PN Ordering Section	C,H,K,M,V	B, D, F, G, J	C, G	DAL2,IRC2,TEC
M8340109^1012%&	10,100		C,H,K,M,V	B, D	C, G	DAL2,IRC2,TEC
M8340109^1022%&	10,200		C,H,K,M,V	B, D, F	C, G	DAL2,IRC2,TEC
M8340109^1042%&	10,400		C,H,K,M,V	B, D	C, G	DAL2,IRC2,TEC
M8340109^1052%&	10,500		C,H,K,M,V	B, D, F	C, G	DAL2,IRC2,TEC
M8340109^1062%&	10,600	See PN Ordering Section	C,H,K,M,V	B, D	C, G	DAL2,IRC2,TEC
M8340109^1072%&	10,700		C,H,K,M,V	B, D, F	C, G	DAL2,IRC2,TEC
M8340109^1092%&	10,900		C,H,K,M,V	B, D	C, G	DAL2,IRC2,TEC
M8340109^1102%&	11,000		C,H,K,M,V	B, D, F, G, J	C, G	DAL2,IRC2,TEC
M8340109^1112%&	11,100		C,H,K,M,V	B, D	C, G	DAL2,IRC2,TEC
M8340109^1132%&	11,300	See PN Ordering Section	C,H,K,M,V	B, D, F	C, G	DAL2,IRC2,TEC
M8340109^1142%&	11,400		C,H,K,M,V	B, D	C, G	DAL2,IRC2,TEC
M8340109^1152%&	11,500		C,H,K,M,V	B, D, F	C, G	DAL2,IRC2,TEC
M8340109^1172%&	11,700		C,H,K,M,V	B, D	C, G	DAL2,IRC2,TEC
	Resistance	Power	Char.	Res.		
Part Number	Value (Ohms)	Rating	(^)	Tolerance	Schematic	Manufacturer
M8340109^1182%&	11,800		C,H,K,M,V	B, D, F	C, G	DAL2,IRC2,TEC

M8340109^1202%&	12,000	See PN Ordering Section	C,H,K,M,V	B, D, F, G, J	C, G	DAL2,IRC2,TEC
M8340109^1212%&	12,100		C,H,K,M,V	B, D, F	C, G	DAL2,IRC2,TEC
M8340109^1232%&	12,300		C,H,K,M,V	B, D	C, G	DAL2,IRC2,TEC
M8340109^1242%&	12,400		C,H,K,M,V	B, D, F	C, G	DAL2,IRC2,TEC
M8340109^1262%&	12,600		C,H,K,M,V	B, D	C, G	DAL2,IRC2,TEC
M8340109^1272%&	12,700	See PN Ordering Section	C,H,K,M,V	B, D, F	C, G	DAL2,IRC2,TEC
M8340109^1292%&	12,900		C,H,K,M,V	B, D	C, G	DAL2,IRC2,TEC
M8340109^1302%&	13,000		C,H,K,M,V	B, D, F, G, J	C, G	DAL2,IRC2,TEC
M8340109^1322%&	13,200		C,H,K,M,V	B, D	C, G	DAL2,IRC2,TEC
M8340109^1332%&	13,300		C,H,K,M,V	B, D, F	C, G	DAL2,IRC2,TEC
M8340109^1352%&	13,500	See PN Ordering Section	C,H,K,M,V	B, D	C, G	DAL2,IRC2,TEC
M8340109^1372%&	13,700		C,H,K,M,V	B, D, F	C, G	DAL2,IRC2,TEC
M8340109^1382%&	13,800		C,H,K,M,V	B, D	C, G	DAL2,IRC2,TEC
	Resistance	Power	Char.	Res.		
Part Number	Value (Ohms)	Rating	(^)	Tolerance	Schematic	Manufacturer
M8340109^1402%&	14,000		C,H,K,M,V	B, D, F	C, G	DAL2,IRC2,TEC
M8340109^1422%&	14,200		C,H,K,M,V	B, D	C, G	DAL2,IRC2,TEC
M8340109^1432%&	14,300	See PN Ordering Section	C,H,K,M,V	B, D, F	C, G	DAL2,IRC2,TEC
M8340109^1452%&	14,500		C,H,K,M,V	B, D	C, G	DAL2,IRC2,TEC
M8340109^1472%&	14,700		C,H,K,M,V	B, D, F	C, G	DAL2,IRC2,TEC
M8340109^1492%&	14,900		C,H,K,M,V	B, D	C, G	DAL2,IRC2,TEC
M8340109^1502%&	15,000		C,H,K,M,V	B, D, F, G, J	C, G	DAL2,IRC2,TEC
M8340109^1522%&	15,200	See PN Ordering Section	C,H,K,M,V	B, D	C, G	DAL2,IRC2,TEC
M8340109^1542%&	15,400		C,H,K,M,V	B, D, F	C, G	DAL2,IRC2,TEC
M8340109^1562%&	15,600		C,H,K,M,V	B, D	C, G	DAL2,IRC2,TEC
M8340109^1582%&	15,800		C,H,K,M,V	B, D, F	C, G	DAL2,IRC2,TEC
M8340109^1602%&	16,000		C,H,K,M,V	B, D, G, J	C, G	DAL2,IRC2,TEC
M8340109^1622%&	16,200	See PN Ordering Section	C,H,K,M,V	B, D, F	C, G	DAL2,IRC2,TEC
M8340109^1642%&	16,400		C,H,K,M,V	B, D	C, G	DAL2,IRC2,TEC
	Resistance	Power	Char.	Res.		
Part Number	Value (Ohms)	Rating	(^)	Tolerance	Schematic	Manufacturer
M8340109^1652%&	16,500		C,H,K,M,V	B, D, F	C, G	DAL2,IRC2,TEC
M8340109^1672%&	16,700		C,H,K,M,V	B, D	C, G	DAL2,IRC2,TEC
M8340109^1692%&	16,900		C,H,K,M,V	B, D, F	C, G	DAL2,IRC2,TEC
M8340109^1722%&	17,200	See PN Ordering Section	C,H,K,M,V	B, D	C, G	DAL2,IRC2,TEC
M8340109^1742%&	17,400		C,H,K,M,V	B, D, F	C, G	DAL2,IRC2,TEC
M8340109^1762%&	17,600		C,H,K,M,V	B, D	C, G	DAL2,IRC2,TEC
M8340109^1782%&	17,800		C,H,K,M,V	B, D, F	C, G	DAL2,IRC2,TEC
M8340109^1802%&	18,000		C,H,K,M,V	B, D, G, J	C, G	DAL2,IRC2,TEC
M8340109^1822%&	18,200	See PN Ordering Section	C,H,K,M,V	B, D, F	C, G	DAL2,IRC2,TEC
M8340109^1842%&	18,400		C,H,K,M,V	B, D	C, G	DAL2,IRC2,TEC
M8340109^1872%&	18,700		C,H,K,M,V	B, D, F	C, G	DAL2,IRC2,TEC
M8340109^1892%&	18,900		C,H,K,M,V	B, D	C, G	DAL2,IRC2,TEC
M8340109^1912%&	19,100		C,H,K,M,V	B, D, F	C, G	DAL2,IRC2,TEC
M8340109^1932%&	19,300	See PN Ordering Section	C,H,K,M,V	B, D	C, G	DAL2,IRC2,TEC
	Resistance	Power	Char.	Res.		
Part Number	Value (Ohms)	Rating	(^)	Tolerance	Schematic	Manufacturer

M8340109^1962%&	19,600		C,H,K,M,V	B, D, F	C, G	DAL2,IRC2,TEC
M8340109^1982%&	19,800		C,H,K,M,V	B, D	C, G	DAL2,IRC2,TEC
M8340109^2002%&	20,000		C,H,K,M,V	B, D, F, G, J	C, G	DAL2,IRC2,TEC
M8340109^2032%&	20,300		C,H,K,M,V	B, D	C, G	DAL2,IRC2,TEC
M8340109^2052%&	20,500	See PN Ordering Section	C,H,K,M,V	B, D, F	C, G	DAL2,IRC2,TEC
M8340109^2082%&	20,800		C,H,K,M,V	B, D	C, G	DAL2,IRC2,TEC
M8340109^2102%&	21,000		C,H,K,M,V	B, D, F	C, G	DAL2,IRC2,TEC
M8340109^2132%&	21,300		C,H,K,M,V	B, D	C, G	DAL2,IRC2,TEC
M8340109^2152%&	21,500		C,H,K,M,V	B, D, F	C, G	DAL2,IRC2,TEC
M8340109^2182%&	21,800	See PN Ordering Section	C,H,K,M,V	B, D	C, G	DAL2,IRC2,TEC
M8340109^2202%&	22,000		C,H,K,M,V	G, J	C, G	DAL2,IRC2,TEC
M8340109^2212%&	22,100		C,H,K,M,V	B, D, F	C, G	DAL2,IRC2,TEC
M8340109^2232%&	22,300		C,H,K,M,V	B, D	C, G	DAL2,IRC2,TEC
M8340109^2262%&	22,600		C,H,K,M,V	B, D, F	C, G	DAL2,IRC2,TEC
	Resistance	Power	Char.	Res.		
Part Number	Value (Ohms)	Rating	(^)	Tolerance	Schematic	Manufacturer
M8340109^2292%&	22,900	See PN Ordering Section	C,H,K,M,V	B, D	C, G	DAL2,IRC2,TEC
M8340109^2322%&	23,200		C,H,K,M,V	B, D, F	C, G	DAL2,IRC2,TEC
M8340109^2342%&	23,400		C,H,K,M,V	B, D	C, G	DAL2,IRC2,TEC
M8340109^2372%&	23,700		C,H,K,M,V	B, D, F	C, G	DAL2,IRC2,TEC
M8340109^2402%&	24,000		C,H,K,M,V	B, D, F, G, J	C, G	DAL2,IRC2,TEC
M8340109^2432%&	24,300	See PN Ordering Section	C,H,K,M,V	B, D, F	C, G	DAL2,IRC2,TEC
M8340109^2462%&	24,600		C,H,K,M,V	B, D	C, G	DAL2,IRC2,TEC
M8340109^2492%&	24,900		C,H,K,M,V	B, D, F	C, G	DAL2,IRC2,TEC
M8340109^2522%&	25,200		C,H,K,M,V	B, D	C, G	DAL2,IRC2,TEC
M8340109^2552%&	25,500		C,H,K,M,V	B, D, F	C, G	DAL2,IRC2,TEC
M8340109^2582%&	25,800	See PN Ordering Section	C,H,K,M,V	B, D	C, G	DAL2,IRC2,TEC
M8340109^2612%&	26,100		C,H,K,M,V	B, D, F	C, G	DAL2,IRC2,TEC
M8340109^2642%&	26,400		C,H,K,M,V	B, D	C, G	DAL2,IRC2,TEC
M8340109^2672%&	26,700		C,H,K,M,V	B, D, F	C, G	DAL2,IRC2,TEC
	Resistance	Power	Char.	Res.		
Part Number	Value (Ohms)	Rating	(^)	Tolerance	Schematic	Manufacturer
M8340109^2702%&	27,000		C,H,K,M,V	G, J	C, G	DAL2,IRC2,TEC
M8340109^2712%&	27,100	See PN Ordering Section	C,H,K,M,V	B, D	C, G	DAL2,IRC2,TEC
M8340109^2742%&	27,400		C,H,K,M,V	B, D, F	C, G	DAL2,IRC2,TEC
M8340109^2772%&	27,700		C,H,K,M,V	B, D	C, G	DAL2,IRC2,TEC
M8340109^2802%&	28,000		C,H,K,M,V	B, D, F	C, G	DAL2,IRC2,TEC
M8340109^2842%&	28,400		C,H,K,M,V	B, D	C, G	DAL2,IRC2,TEC
M8340109^2872%&	28,700	See PN Ordering Section	C,H,K,M,V	B, D, F	C, G	DAL2,IRC2,TEC
M8340109^2912%&	29,100		C,H,K,M,V	B, D	C, G	DAL2,IRC2,TEC
M8340109^2942%&	29,400		C,H,K,M,V	B, D, F	C, G	DAL2,IRC2,TEC
M8340109^2982%&	29,800		C,H,K,M,V	B, D	C, G	DAL2,IRC2,TEC
M8340109^3002%&	30,000		C,H,K,M,V	G, J	C, G	DAL2,IRC2,TEC
M8340109^3012%&	30,100	See PN Ordering Section	C,H,K,M,V	B, D, F	C, G	DAL2,IRC2,TEC
M8340109^3052%&	30,500		C,H,K,M,V	B, D	C, G	DAL2,IRC2,TEC
M8340109^3092%&	30,900		C,H,K,M,V	B, D, F	C, G	DAL2,IRC2,TEC
	Resistance	Power	Char.	Res.		

Part Number	Value (Ohms)	Rating	(^)	Tolerance	Schematic	Manufacturer
M8340109^3122%&	31,200		C,H,K,M,V	B, D	C, G	DAL2,IRC2,TEC
M8340109^3162%&	31,600		C,H,K,M,V	B, D, F	C, G	DAL2,IRC2,TEC
M8340109^3202%&	32,000	See PN Ordering Section	C,H,K,M,V	B, D	C, G	DAL2,IRC2,TEC
M8340109^3242%&	32,400		C,H,K,M,V	B, D, F	C, G	DAL2,IRC2,TEC
M8340109^3282%&	32,800		C,H,K,M,V	B, D	C, G	DAL2,IRC2,TEC
M8340109^3302%&	33,000		C,H,K,M,V	G, J	C, G	DAL2,IRC2,TEC
M8340109^3322%&	33,200		C,H,K,M,V	B, D, F	C, G	DAL2,IRC2,TEC
M8340109^3362%&	33,600	See PN Ordering Section	C,H,K,M,V	B, D	C, G	DAL2,IRC2,TEC
M8340109^3402%&	34,000		C,H,K,M,V	B, D, F	C, G	DAL2,IRC2,TEC
M8340109^3442%&	34,400		C,H,K,M,V	B, D	C, G	DAL2,IRC2,TEC
M8340109^3482%&	34,800		C,H,K,M,V	B, D, F	C, G	DAL2,IRC2,TEC
M8340109^3522%&	35,200		C,H,K,M,V	B, D	C, G	DAL2,IRC2,TEC
M8340109^3572%&	35,700	See PN Ordering Section	C,H,K,M,V	B, D, F	C, G	DAL2,IRC2,TEC
M8340109^3602%&	36,000		C,H,K,M,V	G, J	C, G	DAL2,IRC2,TEC
	Resistance	Power	Char.	Res.		
Part Number	Value (Ohms)	Rating	(^)	Tolerance	Schematic	Manufacturer
M8340109^3612%&	36,100		C,H,K,M,V	B, D	C, G	DAL2,IRC2,TEC
M8340109^3652%&	36,500		C,H,K,M,V	B, D, F	C, G	DAL2,IRC2,TEC
M8340109^3702%&	37,000		C,H,K,M,V	B, D	C, G	DAL2,IRC2,TEC
M8340109^3742%&	37,400	See PN Ordering Section	C,H,K,M,V	B, D, F	C, G	DAL2,IRC2,TEC
M8340109^3792%&	37,900		C,H,K,M,V	B, D	C, G	DAL2,IRC2,TEC
M8340109^3832%&	38,300		C,H,K,M,V	B, D, F	C, G	DAL2,IRC2,TEC
M8340109^3882%&	38,800		C,H,K,M,V	B, D	C, G	DAL2,IRC2,TEC
M8340109^3902%&	39,000		C,H,K,M,V	G, J	C, G	DAL2,IRC2,TEC
M8340109^3922%&	39,200	See PN Ordering Section	C,H,K,M,V	B, D, F	C, G	DAL2,IRC2,TEC
M8340109^3972%&	39,700		C,H,K,M,V	B, D	C, G	DAL2,IRC2,TEC
M8340109^4022%&	40,200		C,H,K,M,V	B, D, F	C, G	DAL2,IRC2,TEC
M8340109^4072%&	40,700		C,H,K,M,V	B, D	C, G	DAL2,IRC2,TEC
M8340109^4122%&	41,200		C,H,K,M,V	B, D, F	C, G	DAL2,IRC2,TEC
M8340109^4172%&	41,700	See PN Ordering Section	C,H,K,M,V	B, D	C, G	DAL2,IRC2,TEC
	Resistance	Power	Char.	Res.		
Part Number	Value (Ohms)	Rating	(^)	Tolerance	Schematic	Manufacturer
M8340109^4222%&	42,200		C,H,K,M,V	B, D, F	C, G	DAL2,IRC2,TEC
M8340109^4272%&	42,700		C,H,K,M,V	B, D	C, G	DAL2,IRC2,TEC
M8340109^4302%&	43,000		C,H,K,M,V	G, J	C, G	DAL2,IRC2,TEC
M8340109^4322%&	43,200		C,H,K,M,V	B, D, F	C, G	DAL2,IRC2,TEC
M8340109^4372%&	43,700	See PN Ordering Section	C,H,K,M,V	B, D	C, G	DAL2,IRC2,TEC
M8340109^4422%&	44,200		C,H,K,M,V	B, D, F	C, G	DAL2,IRC2,TEC
M8340109^4482%&	44,800		C,H,K,M,V	B, D	C, G	DAL2,IRC2,TEC
M8340109^4532%&	45,300		C,H,K,M,V	B, D, F	C, G	DAL2,IRC2,TEC
M8340109^4592%&	45,900		C,H,K,M,V	B, D	C, G	DAL2,IRC2,TEC
M8340109^4642%&	46,400	See PN Ordering Section	C,H,K,M,V	B, D, F	C, G	DAL2,IRC2,TEC
M8340109^4702%&	47,000		C,H,K,M,V	B, D, G, J	C, G	DAL2,IRC2,TEC
M8340109^4752%&	47,500		C,H,K,M,V	B, D, F	C, G	DAL2,IRC2,TEC
M8340109^4812%&	48,100		C,H,K,M,V	B, D	C, G	DAL2,IRC2,TEC
M8340109^4872%&	48,700		C,H,K,M,V	B, D, F	C, G	DAL2,IRC2,TEC

	Resistance	Power	Char.	Res.		
Part Number	Value (Ohms)	Rating	(^)	Tolerance	Schematic	Manufacturer
M8340109^4932%&	49,300	See PN Ordering Section	C,H,K,M,V	B, D	C, G	DAL2,IRC2,TEC
M8340109^4992%&	49,900		C,H,K,M,V	B, D, F	C, G	DAL2,IRC2,TEC
M8340109^5052%&	50,500		C,H,K,M,V	B, D	C, G	DAL2,IRC2,TEC
M8340109^5102%&	51,000		C,H,K,M,V	G, J	C, G	DAL2,IRC2,TEC
M8340109^5112%&	51,100		C,H,K,M,V	B, D, F	C, G	DAL2,IRC2,TEC
M8340109^5172%&	51,700	See PN Ordering Section	C,H,K,M,V	B, D	C, G	DAL2,IRC2,TEC
M8340109^5232%&	52,300		C,H,K,M,V	B, D, F	C, G	DAL2,IRC2,TEC
M8340109^5302%&	53,000		C,H,K,M,V	B, D	C, G	DAL2,IRC2,TEC
M8340109^5362%&	53,600		C,H,K,M,V	B, D, F	C, G	DAL2,IRC2,TEC
M8340109^5422%&	54,200		C,H,K,M,V	B, D	C, G	DAL2,IRC2,TEC
M8340109^5492%&	54,900	See PN Ordering Section	C,H,K,M,V	B, D, F	C, G	DAL2,IRC2,TEC
M8340109^5562%&	55,600		C,H,K,M,V	B, D	C, G	DAL2,IRC2,TEC
M8340109^5602%&	56,000		C,H,K,M,V	G, J	C, G	DAL2,IRC2,TEC
M8340109^5622%&	56,200		C,H,K,M,V	B, D, F	C, G	DAL2,IRC2,TEC
	Resistance	Power	Char.	Res.		
Part Number	Value (Ohms)	Rating	(^)	Tolerance	Schematic	Manufacturer
M8340109^5692%&	56,900		C,H,K,M,V	B, D	C, G	DAL2,IRC2,TEC
M8340109^5762%&	57,600	See PN Ordering Section	C,H,K,M,V	B, D, F	C, G	DAL2,IRC2,TEC
M8340109^5832%&	58,300		C,H,K,M,V	B, D	C, G	DAL2,IRC2,TEC
M8340109^5902%&	59,000		C,H,K,M,V	B, D, F	C, G	DAL2,IRC2,TEC
M8340109^5972%&	59,700		C,H,K,M,V	B, D	C, G	DAL2,IRC2,TEC
M8340109^6042%&	60,400		C,H,K,M,V	B, D, F	C, G	DAL2,IRC2,TEC
M8340109^6122%&	61,200	See PN Ordering Section	C,H,K,M,V	B, D	C, G	DAL2,IRC2,TEC
M8340109^6192%&	61,900		C,H,K,M,V	B, D, F	C, G	DAL2,IRC2,TEC
M8340109^6202%&	62,000		C,H,K,M,V	G, J	C, G	DAL2,IRC2,TEC
M8340109^6262%&	62,600		C,H,K,M,V	B, D	C, G	DAL2,IRC2,TEC
M8340109^6342%&	63,400		C,H,K,M,V	B, D, F	C, G	DAL2,IRC2,TEC
M8340109^6422%&	64,200	See PN Ordering Section	C,H,K,M,V	B, D	C, G	DAL2,IRC2,TEC
M8340109^6492%&	64,900		C,H,K,M,V	B, D, F	C, G	DAL2,IRC2,TEC
M8340109^6572%&	65,700		C,H,K,M,V	B, D	C, G	DAL2,IRC2,TEC
	Resistance	Power	Char.	Res.		
Part Number	Value (Ohms)	Rating	(^)	Tolerance	Schematic	Manufacturer
M8340109^6652%&	66,500		C,H,K,M,V	B, D, F	C, G	DAL2,IRC2,TEC
M8340109^6732%&	67,300		C,H,K,M,V	B, D	C, G	DAL2,IRC2,TEC
M8340109^6802%&	68,000	See PN Ordering Section	C,H,K,M,V	G, J	C, G	DAL2,IRC2,TEC
M8340109^6812%&	68,100		C,H,K,M,V	B, D, F	C, G	DAL2,IRC2,TEC
M8340109^6902%&	69,000		C,H,K,M,V	B, D	C, G	DAL2,IRC2,TEC
M8340109^6982%&	69,800		C,H,K,M,V	B, D, F	C, G	DAL2,IRC2,TEC
M8340109^7062%&	70,600		C,H,K,M,V	B, D	C, G	DAL2,IRC2,TEC
M8340109^7152%&	71,500	See PN Ordering Section	C,H,K,M,V	B, D, F	C, G	DAL2,IRC2,TEC
M8340109^7232%&	72,300		C,H,K,M,V	B, D	C, G	DAL2,IRC2,TEC
M8340109^7322%&	73,200		C,H,K,M,V	B, D, F	C, G	DAL2,IRC2,TEC
M8340109^7412%&	74,100		C,H,K,M,V	B, D	C, G	DAL2,IRC2,TEC
M8340109^7502%&	75,000		C,H,K,M,V	B, D, F, G, J	C, G	DAL2,IRC2,TEC
M8340109^7592%&	75,900	See PN Ordering Section	C,H,K,M,V	B, D	C, G	DAL2,IRC2,TEC

M8340109^7682%&	76,800		C,H,K,M,V	B, D, F	C, G	DAL2,IRC2,TEC
	Resistance	Power	Char.	Res.		
Part Number	Value (Ohms)	Rating	(^)	Tolerance	Schematic	Manufacturer
M8340109^7772%&	77,700		C,H,K,M,V	B, D	C, G	DAL2,IRC2,TEC
M8340109^7872%&	78,700		C,H,K,M,V	B, D, F	C, G	DAL2,IRC2,TEC
M8340109^7962%&	79,600		C,H,K,M,V	B, D	C, G	DAL2,IRC2,TEC
M8340109^8062%&	80,600	See PN Ordering Section	C,H,K,M,V	B, D, F	C, G	DAL2,IRC2,TEC
M8340109^8162%&	81,600		C,H,K,M,V	B, D	C, G	DAL2,IRC2,TEC
M8340109^8202%&	82,000		C,H,K,M,V	G, J	C, G	DAL2,IRC2,TEC
M8340109^8252%&	82,500		C,H,K,M,V	B, D, F	C, G	DAL2,IRC2,TEC
M8340109^8352%&	83,500		C,H,K,M,V	B, D	C, G	DAL2,IRC2,TEC
M8340109^8452%&	84,500	See PN Ordering Section	C,H,K,M,V	B, D, F	C, G	DAL2,IRC2,TEC
M8340109^8562%&	85,600		C,H,K,M,V	B, D	C, G	DAL2,IRC2,TEC
M8340109^8662%&	86,600		C,H,K,M,V	B, D, F	C, G	DAL2,IRC2,TEC
M8340109^8762%&	87,600		C,H,K,M,V	B, D	C, G	DAL2,IRC2,TEC
M8340109^8872%&	88,700		C,H,K,M,V	B, D, F	C, G	DAL2,IRC2,TEC
M8340109^8982%&	89,800	See PN Ordering Section	C,H,K,M,V	B, D	C, G	DAL2,IRC2,TEC
	Resistance	Power	Char.	Res.		
Part Number	Value (Ohms)	Rating	(^)	Tolerance	Schematic	Manufacturer
M8340109^9092%&	90,900		C,H,K,M,V	B, D, F	C, G	DAL2,IRC2,TEC
M8340109^9102%&	91,000		C,H,K,M,V	G, J	C, G	DAL2,IRC2,TEC
M8340109^9202%&	92,000		C,H,K,M,V	B, D	C, G	DAL2,IRC2,TEC
M8340109^9312%&	93,100		C,H,K,M,V	B, D, F	C, G	DAL2,IRC2,TEC
M8340109^9422%&	94,200	See PN Ordering Section	C,H,K,M,V	B, D	C, G	DAL2,IRC2,TEC
M8340109^9532%&	95,300		C,H,K,M,V	B, D, F	C, G	DAL2,IRC2,TEC
M8340109^9652%&	96,500		C,H,K,M,V	B, D	C, G	DAL2,IRC2,TEC
M8340109^9762%&	97,600		C,H,K,M,V	B, D, F	C, G	DAL2,IRC2,TEC
M8340109^9882%&	98,800		C,H,K,M,V	B, D	C, G	DAL2,IRC2,TEC

MIL-PRF-83401/9 (RZ090) Film Resistor Networks: 100,000 Ohms Through 1,000,000 Ohms

	Resistance	Power	Char.	Res.		
Part Number	Value (Ohms)	Rating	(^)	Tolerance	Schematic	Manufacturer
M8340109^1003%&	100,000	See PN Ordering Section	C,H,K,M,V	B, D, F, G, J	C, G	DAL2,IRC2,TEC
M8340109^1023%&	102,000		C,H,K,M,V	F	C, G	DAL2
M8340109^1053%&	105,000		C,H,K,M,V	F	C, G	DAL2
M8340109^1073%&	107,000		C,H,K,M,V	F	C, G	DAL2
M8340109^1103%&	110,000		C,H,K,M,V	F, G, J	C, G	DAL2
M8340109^1133%&	113,000	See PN Ordering Section	C,H,K,M,V	F	C, G	DAL2
M8340109^1153%&	115,000		C,H,K,M,V	F	C, G	DAL2
M8340109^1183%&	118,000		C,H,K,M,V	F	C, G	DAL2
M8340109^1203%&	120,000	See PN Ordering Section	C,H,K,M,V	F, G, J	C, G	DAL2
M8340109^1213%&	121,000		C,H,K,M,V	F	C, G	DAL2
M8340109^1243%&	124,000		C,H,K,M,V	F	C, G	DAL2
M8340109^1273%&	127,000	See PN Ordering Section	C,H,K,M,V	F	C, G	DAL2

M8340109^1303%&	130,000		C,H,K,M,V	F, G, J	C, G	DAL2
M8340109^1333%&	133,000		C,H,K,M,V	F	C, G	DAL2
	Resistance	Power	Char.	Res.		
Part Number	Value (Ohms)	Rating	(^)	Tolerance	Schematic	Manufacturer
M8340109^1373%&	137,000		C,H,K,M,V	F	C, G	DAL2
M8340109^1403%&	140,000		C,H,K,M,V	F	C, G	DAL2
M8340109^1433%&	143,000	See PN Ordering Section	C,H,K,M,V	F	C, G	DAL2
M8340109^1473%&	147,000		C,H,K,M,V	F	C, G	DAL2
M8340109^1503%&	150,000		C,H,K,M,V	F, G, J	C, G	DAL2
M8340109^1543%&	154,000		C,H,K,M,V	F	C, G	DAL2
M8340109^1583%&	158,000		C,H,K,M,V	F	C, G	DAL2
M8340109^1603%&	160,000		C,H,K,M,V	G, J	C, G	DAL2
M8340109^1623%&	162,000	See PN Ordering Section	C,H,K,M,V	F	C, G	DAL2
M8340109^1653%&	165,000		C,H,K,M,V	F	C, G	DAL2
M8340109^1693%&	169,000		C,H,K,M,V	F	C, G	DAL2
M8340109^1743%&	174,000		C,H,K,M,V	F	C, G	DAL2
M8340109^1783%&	178,000		C,H,K,M,V	F	C, G	DAL2
M8340109^1803%&	180,000		C,H,K,M,V	G, J	C, G	DAL2
	Resistance	Power	Char.	Res.		
Part Number	Value (Ohms)	Rating	(^)	Tolerance	Schematic	Manufacturer
M8340109^1823%&	182,000	See PN Ordering Section	C,H,K,M,V	F	C, G	DAL2
M8340109^1873%&	187,000		C,H,K,M,V	F	C, G	DAL2
M8340109^1913%&	191,000		C,H,K,M,V	F	C, G	DAL2
M8340109^1963%&	196,000		C,H,K,M,V	F	C, G	DAL2
M8340109^2003%&	200,000		C,H,K,M,V	F, G, J	C, G	DAL2
M8340109^2053%&	205,000	See PN Ordering Section	C,H,K,M,V	F	C, G	DAL2
M8340109^2103%&	210,000		C,H,K,M,V	F	C, G	DAL2
M8340109^2153%&	215,000		C,H,K,M,V	F	C, G	DAL2
M8340109^2183%&	218,000	See PN Ordering Section	C,H,K,M,V		C, G	DAL2
M8340109^2203%&	220,000		C,H,K,M,V	G, J	C, G	DAL2
M8340109^2213%&	221,000		C,H,K,M,V	F	C, G	DAL2
M8340109^2263%&	226,000		C,H,K,M,V	F	C, G	DAL2
M8340109^2323%&	232,000		C,H,K,M,V	F	C, G	DAL2
M8340109^2373%&	237,000		C,H,K,M,V	F	C, G	DAL2
	Resistance	Power	Char.	Res.		
Part Number	Value (Ohms)	Rating	(^)	Tolerance	Schematic	Manufacturer
M8340109^2403%&	240,000		C,H,K,M,V	F, G, J	C, G	DAL2
M8340109^2433%&	243,000	See PN Ordering Section	C,H,K,M,V	F	C, G	DAL2
M8340109^2493%&	249,000		C,H,K,M,V	F	C, G	DAL2
M8340109^2553%&	255,000		C,H,K,M,V	F	C, G	DAL2
M8340109^2613%&	261,000		C,H,K,M,V	F	C, G	DAL2
M8340109^2673%&	267,000		C,H,K,M,V	F	C, G	DAL2
M8340109^2703%&	270,000		C,H,K,M,V	G, J	C, G	DAL2
M8340109^2743%&	274,000		C,H,K,M,V	F	C, G	DAL2
M8340109^2803%&	280,000		C,H,K,M,V	F	C, G	DAL2
M8340109^2873%&	287,000	See PN Ordering Section	C,H,K,M,V	F	C, G	DAL2
M8340109^2943%&	294,000		C,H,K,M,V	F	C, G	DAL2

M8340109^3003%&	300,000		C,H,K,M,V	G, J	C, G	DAL2
M8340109^3013%&	301,000	See PN Ordering Section	C,H,K,M,V	F	C, G	DAL2
M8340109^3093%&	309,000		C,H,K,M,V	F	C, G	DAL2
	Resistance	Power	Char.	Res.		
Part Number	Value (Ohms)	Rating	(^)	Tolerance	Schematic	Manufacturer
M8340109^3163%&	316,000		C,H,K,M,V	F	C, G	DAL2
M8340109^3243%&	324,000		C,H,K,M,V	F	C, G	DAL2
M8340109^3303%&	330,000		C,H,K,M,V	G, J	C, G	DAL2
M8340109^3323%&	332,000		C,H,K,M,V	F	C, G	DAL2
M8340109^3403%&	340,000		C,H,K,M,V	F	C, G	DAL2
M8340109^3483%&	348,000		C,H,K,M,V	F	C, G	DAL2
M8340109^3573%&	357,000	See PN Ordering Section	C,H,K,M,V	F	C, G	DAL2
M8340109^3603%&	360,000		C,H,K,M,V	G, J	C, G	DAL2
M8340109^3653%&	365,000		C,H,K,M,V	F	C, G	DAL2
M8340109^3743%&	374,000	See PN Ordering Section	C,H,K,M,V	F	C, G	DAL2
M8340109^3833%&	383,000		C,H,K,M,V	F	C, G	DAL2
M8340109^3903%&	390,000		C,H,K,M,V	G, J	C, G	DAL2
M8340109^3923%&	392,000	See PN Ordering Section	C,H,K,M,V	F	C, G	DAL2
M8340109^4023%&	402,000		C,H,K,M,V	F	C, G	DAL2
	Resistance	Power	Char.	Res.		
Part Number	Value (Ohms)	Rating	(^)	Tolerance	Schematic	Manufacturer
M8340109^4123%&	412,000		C,H,K,M,V	F	C, G	DAL2
M8340109^4223%&	422,000		C,H,K,M,V	F	C, G	DAL2
M8340109^4303%&	430,000		C,H,K,M,V	G, J	C, G	DAL2
M8340109^4323%&	432,000		C,H,K,M,V	F	C, G	DAL2
M8340109^4423%&	442,000		C,H,K,M,V	F	C, G	DAL2
M8340109^4533%&	453,000		C,H,K,M,V	F	C, G	DAL2
M8340109^4643%&	464,000	See PN Ordering Section	C,H,K,M,V	F	C, G	DAL2
M8340109^4703%&	470,000		C,H,K,M,V	G, J	C, G	DAL2
M8340109^4753%&	475,000		C,H,K,M,V	F	C, G	DAL2
M8340109^4873%&	487,000		C,H,K,M,V	F	C, G	DAL2
M8340109^4993%&	499,000		C,H,K,M,V	F	C, G	DAL2
M8340109^5103%&	510,000		C,H,K,M,V	G, J	C, G	DAL2
M8340109^5113%&	511,000		C,H,K,M,V	F	C, G	DAL2
M8340109^5233%&	523,000		C,H,K,M,V	F	C, G	DAL2
	Resistance	Power	Char.	Res.		
Part Number	Value (Ohms)	Rating	(^)	Tolerance	Schematic	Manufacturer
M8340109^5363%&	536,000		C,H,K,M,V	F	C, G	DAL2
M8340109^5493%&	549,000	See PN Ordering Section	C,H,K,M,V	F	C, G	DAL2
M8340109^5603%&	560,000		C,H,K,M,V	G, J	C, G	DAL2
M8340109^5623%&	562,000		C,H,K,M,V	F	C, G	DAL2
M8340109^5763%&	576,000	See PN Ordering Section	C,H,K,M,V	F	C, G	DAL2
M8340109^5903%&	590,000		C,H,K,M,V	F	C, G	DAL2
M8340109^6043%&	604,000		C,H,K,M,V	F	C, G	DAL2
M8340109^6193%&	619,000		C,H,K,M,V	F	C, G	DAL2
M8340109^6203%&	620,000		C,H,K,M,V	G, J	C, G	DAL2
M8340109^6343%&	634,000		C,H,K,M,V	F	C, G	DAL2

M8340109^6493%&	649,000		C,H,K,M,V	F	C, G	DAL2
M8340109^6653%&	665,000		C,H,K,M,V	F	C, G	DAL2
M8340109^6803%&	680,000	See PN Ordering Section	C,H,K,M,V	G, J	C, G	DAL2
M8340109^6813%&	681,000		C,H,K,M,V	F	C, G	DAL2
	Resistance	Power	Char.	Res.		
Part Number	Value (Ohms)	Rating	(^)	Tolerance	Schematic	Manufacturer
M8340109^6983%&	698,000		C,H,K,M,V	F	C, G	DAL2
M8340109^7153%&	715,000	See PN Ordering Section	C,H,K,M,V	F	C, G	DAL2
M8340109^7323%&	732,000		C,H,K,M,V	F	C, G	DAL2
M8340109^7503%&	750,000		C,H,K,M,V	F, G, J	C, G	DAL2
M8340109^7683%&	768,000		C,H,K,M,V	F	C, G	DAL2
M8340109^7873%&	787,000		C,H,K,M,V	F	C, G	DAL2
M8340109^8063%&	806,000	See PN Ordering Section	C,H,K,M,V	F	C, G	DAL2
M8340109^8203%&	820,000		C,H,K,M,V	G, J	C, G	DAL2
M8340109^8253%&	825,000		C,H,K,M,V	F	C, G	DAL2
M8340109^8453%&	845,000	See PN Ordering Section	C,H,K,M,V	F	C, G	DAL2
M8340109^8663%&	866,000		C,H,K,M,V	F	C, G	DAL2
M8340109^8873%&	887,000		C,H,K,M,V	F	C, G	DAL2
M8340109^9093%&	909,000		C,H,K,M,V	F	C, G	DAL2
M8340109^9103%&	910,000		C,H,K,M,V	G, J	C, G	DAL2
	Resistance	Power	Char.	Res.		
Part Number	Value (Ohms)	Rating	(^)	Tolerance	Schematic	Manufacturer
M8340109^9313%&	931,000		C,H,K,M,V	F	C, G	DAL2
M8340109^9533%&	953,000		C,H,K,M,V	F	C, G	DAL2
M8340109^9763%&	976,000		C,H,K,M,V	F	C, G	DAL2
M8340109^1004%&	1,000,000	See PN Ordering Section	C,H,K,M,V	F, G, J	C, G	DAL2

Monolithics

Hybrids

Resistors

Semiconductors

(Summary)

Diodes

Transistors

Thermistors

Wire and Cable

Carbon Composition Resistors

The last military qualified source (Allen Bradley) ceased production of these resistors in 1996. Although these part types are in general acceptable for space flight applications, it is recommended that alternate resistor styles be selected for new designs where possible.

Refer to NASA Parts Advisory

NA-033

for details on this topic.

Military Specification	Generic Designator	Description
MIL-R-39008	RCR	Fixed, Resistor, Composition (Insulated), Established Reliability

Parts

|

Packaging

|

Radiation

|

Publications

|

Calendar

|

Experts

Admin Login

|

Request Account

|

Feedback

|

Site Map

|

Help

|

Search

NEPP Program Manager:

Chuck Barnes, Jet Propulsion Laboratory

Responsible NASA Official:

Michael Sampson, NEPAG Manager

Website Comments:

Web Development Team

Last Modified:

July 23, 2002

AETD IT Security Banner

NASA Privacy Statement

Film Resistor Manufacturer Listing

Click

here

for detailed information regarding part technologies offered by manufacturers listed in the

PSAP

Core Suppliers List

Listed below are links to manufacturer data sites that may provide additional part related information. The linked sites are not under the control of NPSL and NASA is not responsible for information contained in the linked site. We are providing these links for your convenience only.

ANG

Angstrohm, A Vishay Company

18400 Precision Place

Hagerstown, MD 21742

(301) 739-8722

CAGE Code: 17745

CAD

Caddock Electronics

1717 Chicago Avenue

Riverside, CA 92507

(909) 788-1700

CAGE Code: 19647

DAL

Dale Electronics

1122 23rd Street P.O. Box 609

Columbus, NE 68601-3632

(402) 563-6449

CAGE Code: 91637

DAL2

Dale Israel

Emek-Sarah "B"
Industrial Park
Beer-Sheva, Israel
CAGE Code: 91637
IRC
International Resistive Co. Inc. (IRC)
Greenway Road P.O Box 1860
Boone, NC 28607
(704) 264-8861
CAGE Code: 11502
IRC2
International Resistive Co. Inc. (IRC)
4222 S. Staples
Corpus Christi, TX 78411-2702
(512) 992-7900
CAGE Code: 57027
MSI
Mini-Systems Inc.
20 David Road
North Attleboro, MA 02761
(508) 695-0203
CAGE Code: 50316
OHM
Vishay Thin Film (Formerly Ohmtek Inc., A Vishay Company)
2160 Liberty Drive
Niagara Fall, NY 14304
(716) 283-4025
CAGE Code: 57489
SOA
State of the Art
2470 Fox Hill Road
State College, PA 16801
(814) 355-8004
CAGE Code: 56235
TEC
Dale Electronics, Inc.
Techno Division
7803 Lemona Avenue
Van Nuys, CA 91405-1139
(818)781-1642

CAGE Code: 17826

VIS

Vishay Resistive Systems

63 Lincoln Highway

Malvern, PA 19355

(610) 644-1300

CAGE Code: 18612

VIS2

Vishay Israel, Ltd.

2 Ha'ofan Street

Holon 58125, Israel

CAGE Code: 18612

WIL

Manufacturing Plant Address

Sales Office

Wilbrecht Electronics Corporation

Wilbrecht Electronics Corporation

155 Waibel Drive N.E.

1400 Energy Park Drive, Suite 18

Huron, SD 57350

St.Paul, MN 55108-5248

605-352-7300

(651) 659-0919

CAGE Code: 0KUU5

(651) 659-9204 (fax)

NEW!

Monolithics

Hybrids

Resistors

Semiconductors

(Summary)

Diodes

Transistors

Thermistors

Wire and Cable

Film Resistors

The following film resistor specifications are available for selection:

Military Specification	Generic Designator	Description
MIL-PRF-39017	RLR	Fixed, Film (Insulated), Established Reliability
MIL-PRF-55182	RNC/RNR	Fixed, Film, Established Reliability
MIL-PRF-55342	RM	Fixed, Film, Chip, Established Reliability
S-311-P-742	G311P742	Fixed, Precision, Low Temperature Coefficient of Resistance (Download NASA Goddard Specification)
S-311-P-813	G311P813	Fixed, Precision, Very Low Temperature Coefficient of Resistance (Download NASA Goddard Specification)

Parts

|

Packaging

|

Radiation

|

Publications

|

Calendar

|

Experts

Admin Login

|

Request Account

|

Feedback

|

Site Map

|

Help

|

Search

NEPP Program Manager:

Chuck Barnes, Jet Propulsion Laboratory

Responsible NASA Official:

Michael Sampson, NEPAG Manager

Website Comments:

Web Development Team

Last Modified:

July 23, 2002

AETD IT Security Banner

NASA Privacy Statement

Home

|

NASA Parts Selection List (NPSL)

|

About NPSL

Prohibited Materials

Parts Selection Table of Contents

Capacitors

Circuit Protection Devices

Fuses

Connectors

Filters

Inductors

Microcircuits

NEW!

Monolithics

Hybrids

Resistors

Semiconductors

(Summary)

Diodes

Transistors

Thermistors

Wire and Cable

High Voltage Resistors

The following high voltage resistor specifications are available for selection:

Military Specification	Generic Designator	Description
S-311-P-672	G311P672	Fixed, High Voltage (Mini-Mox), Axial Lead (Download S-311-P-672 Specification)
S-311-P-683	G311P683	Fixed, Precision, High Voltage, Axial Lead (Download S-311-P-683 Specification)

Parts

|

Packaging

|

Radiation

|

Publications

|

Calendar

|

Experts

Admin Login

|

Request Account

|

Feedback

|

Site Map

|

Help

|

Search

NEPP Program Manager:

Chuck Barnes, Jet Propulsion Laboratory

Responsible NASA Official:

Michael Sampson, NEPAG Manager

Website Comments:

Web Development Team

Last Modified:

July 23, 2002

AETD IT Security Banner

NASA Privacy Statement

Resistor Network Manufacturer Listing

Click

here

for detailed information regarding part technologies offered by manufacturers listed in the

PSAP

Core Suppliers List

Listed below are links to manufacturer data sites that may provide additional part related information. The linked sites are not under the control of NPSL and NASA is not responsible for information contained in the linked site. We are providing these links for your convenience only.

DAL

Dale Electronics

1122 23rd Street P.O. Box 609

Columbus, NE 68601-3632

(402) 563-6449

CAGE Code: 91637

DAL

Dale Electronics Inc., A Vishay Company

7803 Lemona Avenue

Van Nuys, CA 91405

(818) 781-1642

CAGE Code: 17826

IRC

International Resistive Co. Inc. (IRC)

4222 S. Staples

Corpus Christi, TX 78411-2702

(512) 992-7900

CAGE Code: 57027

VIS

Vishay Resistive Systems

63 Lincoln Highway

Malvern, PA 19355

(610) 644-1300

CAGE Code: 18612

Filters
Inductors
Microcircuits
NEW!
Monolithics
Hybrids
Resistors
Semiconductors
(Summary)
Diodes
Transistors
Thermistors
Wire and Cable

Resistor Networks

The following resistor network specifications are available for selection:

Military Specification	Generic Designator	Description
MIL-PRF-83401	RZ	Fixed, Resistor Networks, Film

Parts
|
Packaging
|
Radiation
|
Publications
|
Calendar
|
Experts
Admin Login
|
Request Account
|
Feedback
|
Site Map
|
Help

|

Search

NEPP Program Manager:

Chuck Barnes, Jet Propulsion Laboratory

Responsible NASA Official:

Michael Sampson, NEPAG Manager

Website Comments:

Web Development Team

Last Modified:

July 23, 2002

AETD IT Security Banner

NASA Privacy Statement

APPLICATION NOTES FOR S-311-P-672

1) GSFC's S-311-P-672 specification was developed to enable procurement of Space Level high voltage resistors.

2) Parts of any resistance value may be ordered within the ranges listed in the selection list tables.

3) Parts are acceptable for
Level 1 or Level 2
applications.

4) The following table shows the Victoreen commercial designator on which the GSFC specified part is based:

GSFC Style	Victoreen Commercial Designator
1	MOX-400-23
2	MOX-750-23
3	MOX-1125-23

5) These resistors should be deated in accordance with the following curves
(Max. Temp. at Zero Power = +110deg.C):

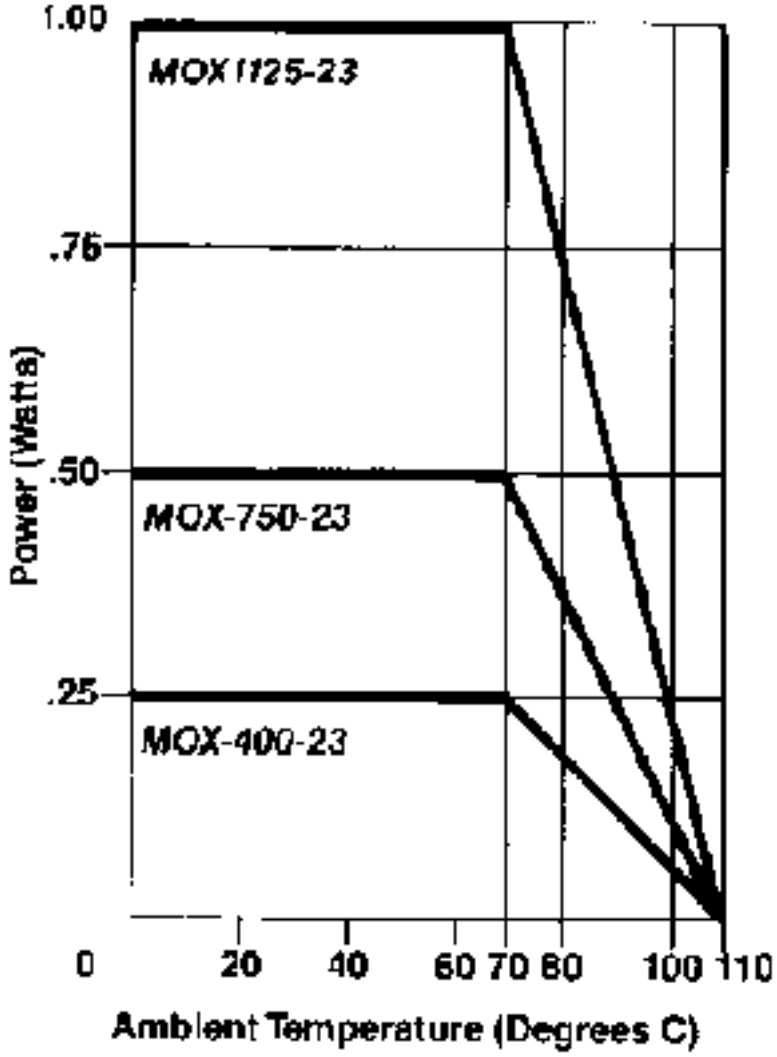
1.00
.75
.50
.25
0
Power (Watts)
MOX 1125-23
MOX-750-23
MOX-400-23
20
40
60
70
80
100
110
Ambient Temperature (Degrees C)

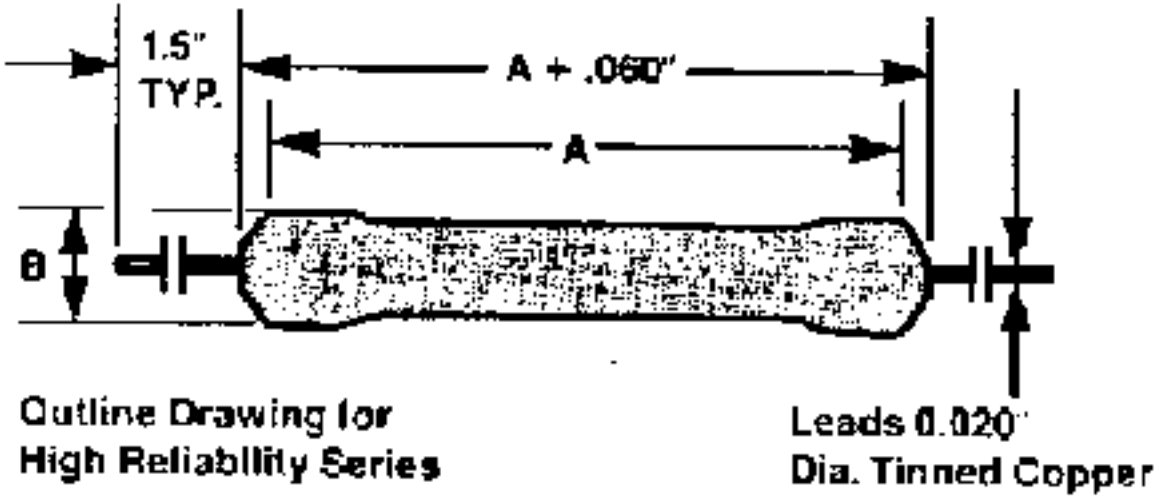

Style

A (Max) in Inches

B (Max) in Inches

1

0.540

0.165

2

0.860

0.165

3

1.250

0.165

Part Number Ordering Information, example and explanation:

G311P672-1-1003F where,

G311P672	-1	-1003	F
Goddard Designator	Style	Resistance Value (Ohms)	Tolerance

Click here for Dimensional Drawing

G311P672 Resistor Characteristics

Style	Power Rating @ 70deg.C	Maximum Working Voltage	Tolerance	Minimum Resistance	Maximum Resistance
1	0.25 W	1,000 Vdc	D	500 ohms	1 Gohms
1	0.25 W	1,000 Vdc	F, G	500 ohms	10 Gohms
1	0.25 W	1,000 Vdc	J, K	500 ohms	300 Gohms
2	0.50 W	2,000 Vdc	D	1 kohm	10 Gohms
2	0.50 W	2,000 Vdc	F	1 kohm	70 Gohms
2	0.50 W	2,000 Vdc	G	1 kohm	100 Gohms
2	0.50 W	2,000 Vdc	J, K	1 kohm	600 Gohms
3	1.00 W	5,000 Vdc	D	1 kohm	10 Gohms
3	1.00 W	5,000 Vdc	F, G	1 kohm	100 Gohms
3	1.00 W	5,000 Vdc	J	1 kohm	400 Gohms
3	1.00 W	5,000 Vdc	K	1 kohm	1,000 Gohms

Resistance Tolerance
D = +/- 0.50%
F = +/- 1%
G = +/- 2%
J = +/- 5%
K = +/- 10%

Resistance Temperature Characteristic (Referenced to 25deg.C)

Style	50 ppm/deg.C	100 ppm/deg.C	250 ppm/deg.C
1	500 ohms to 450 Mohms	451 Mohms to 30 Gohms	30.1 Gohms to 300 Gohms
2	1 kohm to 900 Mohms	901 Mohms to 70 Gohms	70.1 Gohms to 600 Gohms
3	1 kohm to 1.350 Gohms	1.36 Gohms to 100 Gohms	101 Gohms to 1,000 Gohms

Resistance Values:

Nominal resistance values in ohms are identified by four digits. The first three digits represent significant figures; the last digit specifies the number of zeroes to follow.

ex.: 9881= 9,880 ohms

1504 = 1,500,000 ohms

The resistance value selected must be within the standard resistance range listed above for the specified style. It is possible to order resistors with any resistance value within the minimum and maximum values shown in the table above.

Revision History for S-311-P-672 Listing in the NPSL

04/06/98	Initial Release of S-311-P-672 Section on the NPSL Homepage

Go to -

NEPP

|

NPSL

|

Resistors

S-311-P-672, RESISTORS

Fixed, Resistor, High Voltage, Axial-Lead

Click Here to Download S-311-P-672 Procurement Specification

Important! Application Notes

Click Here for Outline Drawing of these Resistors

Available Source of Supply

Revision History for S-311-P-672 Listing in the NPSL

Initial Release: 04/06/98

Part Number/Ordering Explanation

(Note: Individual part number listing not provided herein due to lack of standard resistance value definition for this part type)

S-311-P-672 Resistor Manufacturer Listing

And Links to Manufacturer Homepages

Click

here

for detailed information regarding part technologies offered by manufacturers listed in the

PSAP

Core Suppliers List

Listed below are links to manufacturer data sites that may provide additional part related information. The linked sites are not under the control of NPSL and NASA is not responsible for information contained in the linked site. We are providing these links for your convenience only.

Victoreen Inc.

6000 Cochran Road

Cleveland, OH 44139-3395

216-248-9300

CAGE Code: 63060

APPLICATION NOTES FOR S-311-P-683

1) GSFC's S-311-P-683 specification was developed to enable procurement of Space Level precision, high voltage resistors.

2) Parts of any resistance value may be ordered within the ranges listed in the selection list tables.

3) Parts with tolerance code B (0.1%) and C (0.25%) have a lower power rating and maximum working voltage than parts with tolerance code D (0.5%) and F (1%). These different ratings are specified in order to guarantee that parts of tolerance B and C will remain within tolerance over long term usage at rated conditions.

4) Parts are acceptable for

Level 1 or Level 2

applications.

5)

Inductance considerations. Beginning with Revision B of this specification dated July 5, 2001 ALL resistor styles provided to this specification are manufactured using resistance patterns referred to by Caddock as the "non-inductive" construction which minimize the inductance of the component. Users who consult Caddock's data sheets for this device type will note that the commercial version of the smaller styles (650, 655, 660 and 680) may be supplied with a "low-inductance" construction. However, all parts ordered per this S311 specification will be manufactured using the "non-inductive" construction only. For further information, consult the manufacturer's catalog or contact Caddock Electronics, Incorporated, 1717 Chicago Avenue, Riverside, CA 92507-2364.

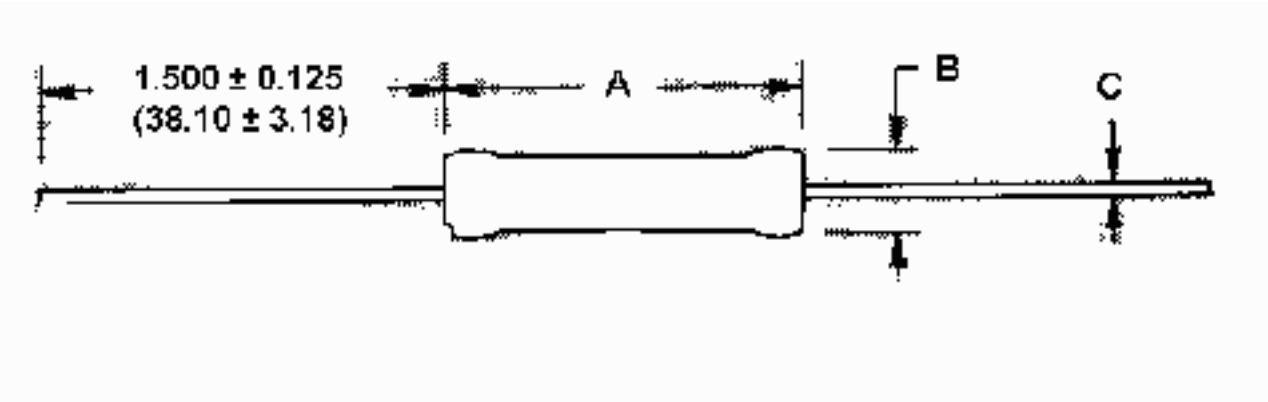

		Dimensions in Inches (Millimeters)	
Style	A	B	C
650	0.313+/-0.020 (7.95+/-0.51)	0.094+/-0.015 (2.39+/-0.38)	0.025+/-0.002 (0.64+/-0.05)
655	0.313+/-0.030 (7.95+/-0.76)	0.109+/-0.015 (2.77+/-0.38)	0.025+/-0.002 (0.64+/-0.05)
660	0.500+/-0.030 (12.70+/-0.76)	0.094+/-0.015 (2.39+/-0.38)	0.025+/-0.002 (0.64+/-0.05)
680	0.750+/-0.030 (19.05+/-0.76)	0.094+/-0.015 (2.39+/-0.38)	0.025+/-0.002 (0.64+/-0.05)
710	1.000+/-0.040 (25.40+/-1.02)	0.094+/-0.015 (2.39+/-0.38)	0.025+/-0.002 (0.64+/-0.05)
712	0.400+/-0.060 (10.16+/-1.52)	0.140+/-0.030 (3.56+/-0.76)	0.025+/-0.002 (0.64+/-0.05)
714	0.562+/-0.060 (14.27+/-1.52)	0.150+/-0.030 (3.81+/-0.76)	0.032+/-0.002 (0.81+/-0.05)
715	0.750+/-0.060 (19.05+/-1.52)	0.140+/-0.030 (3.56+/-0.76)	0.025+/-0.002 (0.64+/-0.05)
716	1.000+/-0.060 (25.40+/-1.52)	0.140+/-0.030 (3.56+/-0.76)	0.025+/-0.002 (0.64+/-0.05)
717	0.710+/-0.050 (18.03+/-1.27)	0.240+/-0.030 (6.10+/-0.76)	0.040+/-0.002 (1.02+/-0.05)

720	1.500+/-0.080 (38.10+/-2.03)	0.140+/-0.030 (3.56+/-0.76)	0.025+/-0.002 (0.64+/-0.05)
721	1.000+/-0.050 (25.40+/-1.27)	0.240+/-0.030 (6.10+/-0.76)	0.040+/-0.002 (1.02+/-0.05)
725	2.000+/-0.080 (50.80+/-2.03)	0.140+/-0.030 (3.56+/-0.76)	0.025+/-0.002 (0.64+/-0.05)
730	1.500+/-0.080 (38.10+/-2.03)	0.240+/-0.030 (6.10+/-0.76)	0.040+/-0.002 (1.02+/-0.05)
731	1.000+/-0.060 (25.40+/-1.52)	0.315+/-0.030 (8.00+/-0.76)	0.040+/-0.002 (1.02+/-0.05)
735	2.000+/-0.080 (50.80+/-2.03)	0.240+/-0.030 (6.10+/-0.76)	0.040+/-0.002 (1.02+/-0.05)
740	1.500+/-0.060 (38.10+/-1.52)	0.315+/-0.030 (8.00+/-0.76)	0.040+/-0.002 (1.02+/-0.05)
745	3.000+/-0.100 (76.20+/-2.54)	0.240+/-0.030 (6.10+/-0.76)	0.040+/-0.002 (1.02+/-0.05)
750	2.125+/-0.060 (53.98+/-1.52)	0.315+/-0.030 (8.00+/-0.76)	0.040+/-0.002 (1.02+/-0.05)
780	3.125+/-0.060 (79.38+/-1.52)	0.315+/-0.030 (8.00+/-0.76)	0.040+/-0.002 (1.02+/-0.05)
785	4.000+/-0.120 (101.60+/-3.05)	0.315+/-0.030 (8.00+/-0.76)	0.040+/-0.002 (1.02+/-0.05)
810	5.000+/-0.120 (127.00+/-3.05)	0.315+/-0.030 (8.00+/-0.76)	0.040+/-0.002 (1.02+/-0.05)
815	6.000+/-0.120 (152.40+/-3.05)	0.350+/-0.040 (8.89+/-1.02)	0.040+/-0.002 (1.02+/-0.05)

Part Number Ordering Information, example and explanation:

G311P683-7501006D where,

G311P683	-750	1006	D
Goddard Designator	Style	Resistance Value (Ohms)	Tolerance

Click Here for Dimensional Drawings

G311P683 Resistor Characteristics

Style	Power Rating @ 125deg.C (Watts)	Maximum Working Voltage (Volts)	Tolerance	Dielectric Strength (Volts)	Minimum Resistance (Ohms)	Maximum Resistance (Ohms)
650	0.50 0.25	600 300	D, F B, C	750	200	5 M
655	0.50 0.25	600 300	D, F B, C	750	200	8 M
660	0.60 0.30	1,000 500	D, F B, C	750	400	10 M
680	0.80 0.40	2,000 1,000	D, F B, C	750	600	20 M
710	1.0 0.5	4,000 2,000	D, F B, C	750	800	50 M
712	0.60 0.30	4,000 2,000	D, F B, C	750	800	20 M
714	1.0 0.5	4,000 2,000	D, F B, C	750	200	20 M
715	1.0 0.5	2,000 1,000	D, F B, C	750	400	50 M
716	1.5 0.75	4,000 2,000	D, F B, C	750	600	75 M
717	1.5 0.75	2,000 1,000	D, F B, C	750	600	75 M
720	2.0 1.0	6,000 3,000	D, F B, C	750	1,000	150 M
721	2.0 1.0	4,000 2,000	D, F B, C	750	200	100 M
725	2.5 1.25	10,000 5,000	D, F B, C	1,000	1,500	200 M
730	3.0 1.5	6,000 3,000	D, F B, C	1,000	500	250 M
731	2.6 1.3	4,000 2,000	D, F B, C	1,000	200	150 M
735	3.6 1.8	10,000 5,000	D, F B, C	1,000	750	300 M
740	3.6 1.8	6,000 3,000	D, F B, C	1,000	300	300 M
745	5.0 2.5	15,000 7,500	D, F B, C	1,000	1,000	500 M
750	5.0 2.5	10,000 5,000	D, F B, C	1,000	400	500 M

780	7.5 3.75	15,000 7,500	D, F B, C	1,000	600	750 M
785	8.0 4.0	20,000 10,000	D, F B, C	1,000	800	1,000 M
810	10.0 5.0	25,000 12,500	D, F B, C	1,000	1,000	1,250 M
815	15.0 7.5	30,000 15,000	D, F B, C	1,000	1,000	2,000 M

Temperature Range	Resistance Temperature Characteristic (Referenced to +25deg.C)
+15deg.C to +45deg.C	+/-40 parts per million/deg.C
-15deg.C to +105deg.C	+/-80 parts per million/deg.C
-55deg.C to +125deg.C	+/-140 parts per million/deg.C

Resistance Tolerance
B = +/- 0.10%
C = +/- 0.25%
D = +/- 0.50%
F = +/- 1%

Resistance Values:

Nominal resistance values in ohms are identified by four digits. The first three digits represent significant figures; the last digit specifies the number of zeroes to follow.

ex.: 9881= 9,880 ohms

1006 = 100,000,000 ohms

The resistance value selected must be within the standard resistance range listed above for the specified style. There are no standard resistance values for this part type; therefore, a detailed listing of part numbers is not provided herein. It is possible to order resistors with any resistance value within the minimum and maximum values shown in the table above.

Revision History for S-311-P-683 Listing in the NPSL

07/10/01	Updated Application Note regarding "inductance considerations" of this part type. Revision B of this drawing updated the specification to clarify that Caddock now produces ALL styles of this S311 par
12/16/97	Initial Release of S-311-P-683 Section in the NPSL

Go to -

NEPP

|

NPSL

|

Resistors

S-311-P-683, RESISTORS

Fixed, Resistor, High Voltage, Precision, Axial Lead

Click Here to Download S-311-P-683

Important! Application Notes

Click Here for Outline Drawing of these Resistors

Available Source of Supply

Revision History for S-311-P-683 Listing in the NPSL

Last Updated 07/10/01

Part Number/Ordering Explanation

(Note: Individual part number listing not provided herein due to lack of standard resistance value definition for this part type)

S-311-P-683 High Voltage, Precision Resistor Manufacturer Listing

And Links to Manufacturer Homepages

Click

here

for detailed information regarding part technologies offered by manufacturers listed in the

PSAP

Core Suppliers List

Listed below are links to manufacturer data sites that may provide additional part related information. The linked sites are not under the control of NPSL and NASA is not responsible for information contained in the linked site. We are providing these links for your convenience onl

y.

CAD

Caddock Electronics

1717 Chicago Avenue

Riverside, CA 92507

(909) 788-1700

CAGE Code: 19647

APPLICATION NOTES FOR S-311-P-742

1) GSFC's S-311-P-742 specification was developed to enable procurement of Space Level precision resistors. Users requiring tighter resistance temperature characteristics and values below 1 kohm should consider using

S-311-P-813

.

2) Parts of any resistance value may be ordered within the ranges listed in the selection list tables.

3) Parts are acceptable for

Level 1 or Level 2

applications.

4) These S-311-P-742 resistors should be considered for applications where their particular combination of characteristics:

Tight resistance temperature characteristic

Limited resistance drift over time

Semi-precision

High power rating for package density

Values greater than 100 kohm

are necessary.

Case "A"
Model 121

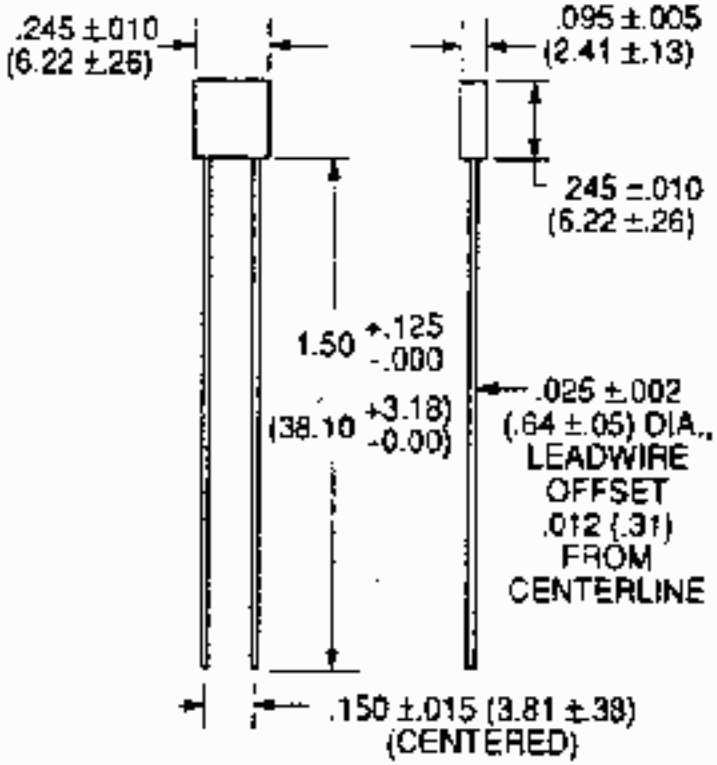

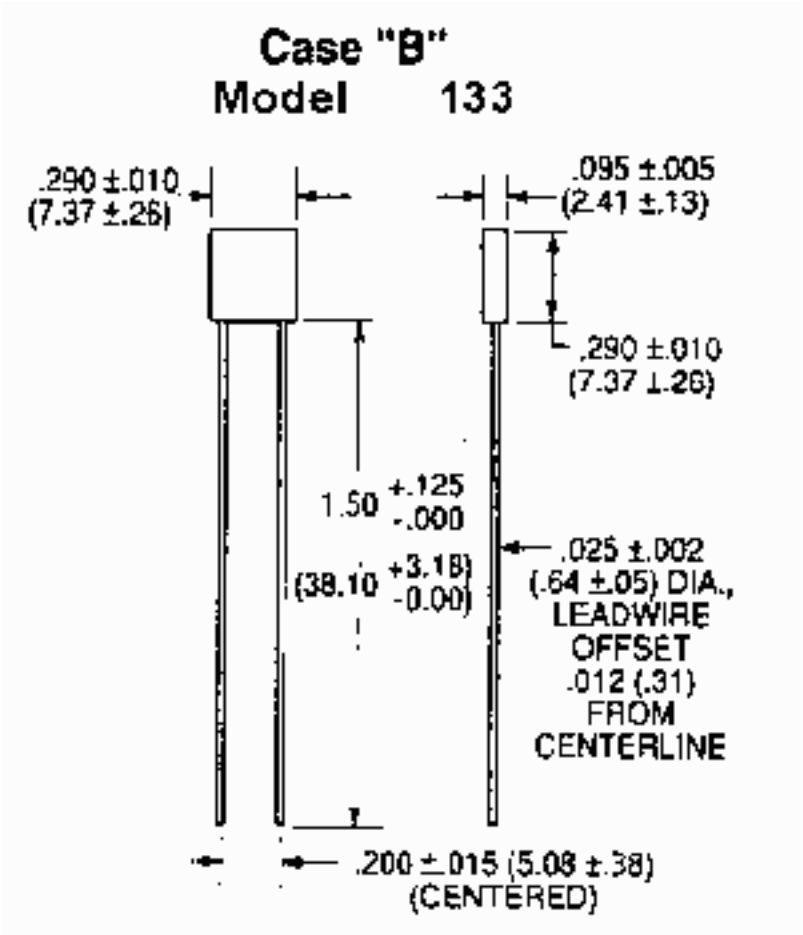
Case "B"
Model 133
.290 ±.010
(7.37 ±.26)
.095 ±.005
(2.41 ±.13)
.290 ±.010
(7.37 ±.26)
1.50 +.125 -.000
(38.10 +3.18 -0.00)
.025 ±.002
(.64 ±.05) DIA.,
LEADWIRE
OFFSET
.012 (.31)
FROM
CENTERLINE
.200 ±.015 (5.08 ±.38)
(CENTERED)

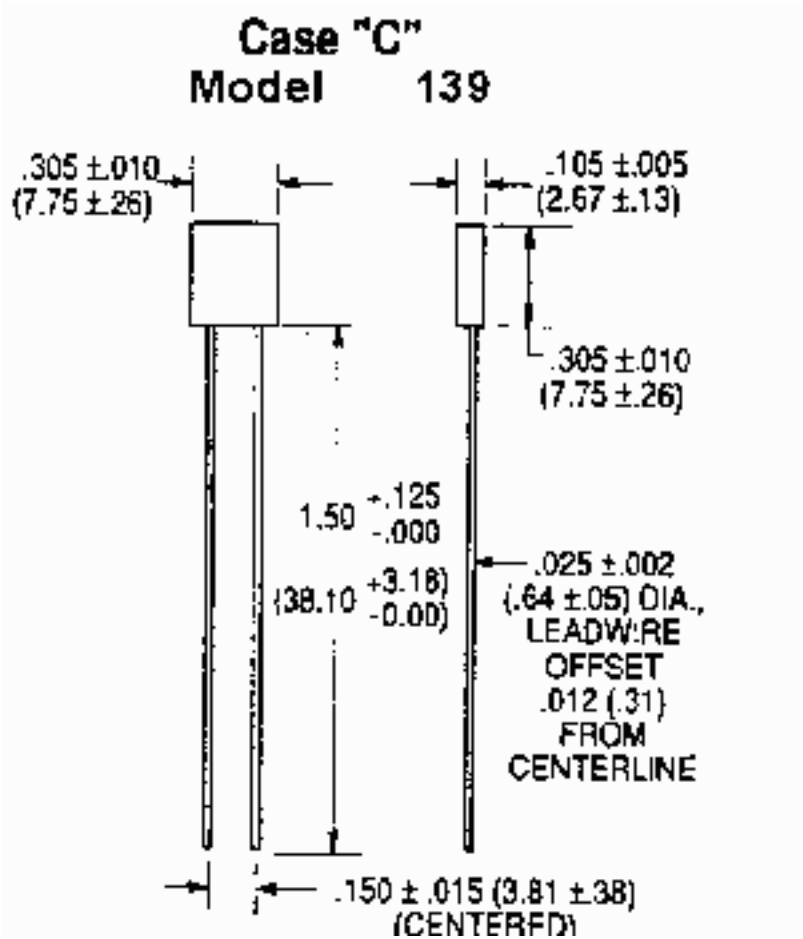

Part Number Ordering Information, example and explanation:

G311P742-133B1504D where,

G311P742	-133	B	1504	D
Goddard Designator	Style	Temperature Characteristic	Resistance Value (Ohms)	Tolerance

G311P742 Resistor Characteristics

Style	Power Rating @ 125deg.C	Maximum Working Voltage	Dielectric Strength	Minimum Resistance	Maximum Resistance	Dimensions
121	0.2 W	200 Vdc	300 Vdc	1 kohm	500 kohms	Case A
133	0.3 W	300 Vdc	400 Vdc	1 kohm	1.5 Mohms	Case B
139	0.3 W	300 Vdc	400 Vdc	1 kohm	1.5 Mohms	Case C

Part number ordering options are developed using the following criteria:

Temperature Characteristic	Operating Temperature Range	Resistance Temperature Characteristic (Referenced to +25deg.C)
A	-55deg.C to +125deg.C	+/-5 parts per million/deg.C
B	-55deg.C to +125deg.C	+/-10 parts per million/deg.C
C	-55deg.C to +125deg.C	+/-20 parts per million/deg.C

Resistance Tolerance
A = +/- 0.05%
B = +/- 0.10%
C = +/- 0.25%
D = +/- 0.50%
F = +/- 1%
G = +/- 2%

Resistance Values:

Nominal resistance values in ohms are identified by four digits. The first three digits represent significant figures; the last digit specifies the number of zeroes to follow.

ex.: 9881= 9,880 ohms

1504 = 1,500,000 ohms

The resistance value selected must be within the standard resistance range listed above for the specified style. Due to the manufacturer's complex oxide technology, it is possible to order resistors with any resistance value within the minimum and maximum values shown in the table above.

Revision History for S-311-P-742 Listing in the NPSL

12/16/97	Initial Release of S-311-P-742 Section in the NPSL

Go to -

NEPP

|

NPSL

|

Resistors

S-311-P-742, RESISTORS

Fixed, Resistor, Low, Resistance Temperature Characteristic,

Precision, Radial-Lead

Click Here to Download S-311-P-742

Important! Application Notes

Click Here for Outline Drawing of these Resistors

Available Source of Supply

Revision History for S-311-P-742 Listing in the NPSL

Initial Release 12/16/97

Part Number/Ordering Explanation

(Note: Individual part number listing not provided herein due to lack of standard resistance value definition for this part type)

S-311-P-742 Resistor Manufacturer Listing

And Links to Manufacturer Homepages

Click

here

for detailed information regarding part technologies offered by manufacturers listed in the

PSAP

Core Suppliers List

Listed below are links to manufacturer data sites that may provide additional part related information. The linked sites are not under the control of NPSL and NASA is not responsible for information contained in the linked site. We are providing these links for your convenience only.

CAD

Caddock Electronics

1717 Chicago Avenue

Riverside, CA 92507

(909) 788-1700

CAGE Code: 19647

S-311-P-813 Precision Resistors

	Resistance	Power	Temperature	Resistance	Performance	
Part Number	Value (Ohms)	Rating (W)	Characteristic (#)	Tolerance (%)	Processing (&)	Manufacturer
G311P813#1R0000%&	1.0000	0.3	C	D, F	E, N	
G311P813#1R0100%&	1.0100	0.3	C	D, F	E, N	
G311P813#1R0200%&	1.0200	0.3	C	D, F	E, N	
G311P813#1R0400%&	1.0400	0.3	C	D, F	E, N	
G311P813#1R0500%&	1.0500	0.3	C	D, F	E, N	
G311P813#1R0600%&	1.0600	0.3	C	D, F	E, N	
G311P813#1R0700%&	1.0700	0.3	C	D, F	E, N	
G311P813#1R0900%&	1.0900	0.3	C	D, F	E, N	
G311P813#1R1000%&	1.1000	0.3	C	D, F	E, N	
G311P813#1R1100%&	1.1100	0.3	C	D, F	E, N	
G311P813#1R1300%&	1.1300	0.3	C	D, F	E, N	
G311P813#1R1400%&	1.1400	0.3	C	D, F	E, N	
G311P813#1R1500%&	1.1500	0.3	C	D, F	E, N	

G311P813#1R1700%&	1.1700	0.3	C	D, F	E, N	
G311P813#1R1800%&	1.1800	0.3	C	D, F	E, N	
G311P813#1R2000%&	1.2000	0.3	C	D, F	E, N	
G311P813#1R2100%&	1.2100	0.3	C	D, F	E, N	
G311P813#1R2300%&	1.2300	0.3	C	D, F	E, N	
G311P813#1R2400%&	1.2400	0.3	C	D, F	E, N	
G311P813#1R2600%&	1.2600	0.3	C	D, F	E, N	
G311P813#1R2700%&	1.2700	0.3	C	D, F	E, N	
G311P813#1R2900%&	1.2900	0.3	C	D, F	E, N	
G311P813#1R3000%&	1.3000	0.3	C	D, F	E, N	
G311P813#1R3200%&	1.3200	0.3	C	D, F	E, N	
G311P813#1R3300%&	1.3300	0.3	C	D, F	E, N	
G311P813#1R3500%&	1.3500	0.3	C	D, F	E, N	
G311P813#1R3700%&	1.3700	0.3	C	D, F	E, N	
G311P813#1R3800%&	1.3800	0.3	C	D, F	E, N	
G311P813#1R4000%&	1.4000	0.3	C	D, F	E, N	
G311P813#1R4200%&	1.4200	0.3	C	D, F	E, N	
G311P813#1R4300%&	1.4300	0.3	C	D, F	E, N	
G311P813#1R4500%&	1.4500	0.3	C	D, F	E, N	
G311P813#1R4700%&	1.4700	0.3	C	D, F	E, N	
G311P813#1R4900%&	1.4900	0.3	C	D, F	E, N	
G311P813#1R5000%&	1.5000	0.3	C	D, F	E, N	
G311P813#1R5200%&	1.5200	0.3	C	D, F	E, N	
G311P813#1R5400%&	1.5400	0.3	C	D, F	E, N	
G311P813#1R5600%&	1.5600	0.3	C	D, F	E, N	
G311P813#1R5800%&	1.5800	0.3	C	D, F	E, N	
G311P813#1R6000%&	1.6000	0.3	C	D, F	E, N	
G311P813#1R6200%&	1.6200	0.3	C	D, F	E, N	
G311P813#1R6400%&	1.6400	0.3	C	D, F	E, N	
G311P813#1R6500%&	1.6500	0.3	C	D, F	E, N	
G311P813#1R6700%&	1.6700	0.3	C	D, F	E, N	
G311P813#1R6900%&	1.6900	0.3	C	D, F	E, N	
G311P813#1R7200%&	1.7200	0.3	C	D, F	E, N	
G311P813#1R7400%&	1.7400	0.3	C	D, F	E, N	
G311P813#1R7600%&	1.7600	0.3	C	D, F	E, N	
G311P813#1R7800%&	1.7800	0.3	C	D, F	E, N	
G311P813#1R8000%&	1.8000	0.3	C	D, F	E, N	
G311P813#1R8200%&	1.8200	0.3	C	D, F	E, N	
G311P813#1R8400%&	1.8400	0.3	C	D, F	E, N	
G311P813#1R8700%&	1.8700	0.3	C	D, F	E, N	
G311P813#1R8900%&	1.8900	0.3	C	D, F	E, N	
G311P813#1R9100%&	1.9100	0.3	C	D, F	E, N	
G311P813#1R9300%&	1.9300	0.3	C	D, F	E, N	
G311P813#1R9600%&	1.9600	0.3	C	D, F	E, N	
G311P813#1R9800%&	1.9800	0.3	C	D, F	E, N	
G311P813#2R0000%&	2.0000	0.3	C	D, F	E, N	
G311P813#2R0300%&	2.0300	0.3	C	D, F	E, N	

G311P813#2R0500%&	2.0500	0.3	C	D, F	E, N	
G311P813#2R0800%&	2.0800	0.3	C	D, F	E, N	
G311P813#2R1000%&	2.1000	0.3	C	D, F	E, N	
G311P813#2R1300%&	2.1300	0.3	C	D, F	E, N	
G311P813#2R1500%&	2.1500	0.3	C	D, F	E, N	
G311P813#2R1800%&	2.1800	0.3	C	D, F	E, N	
G311P813#2R2100%&	2.2100	0.3	C	D, F	E, N	
G311P813#2R2300%&	2.2300	0.3	C	D, F	E, N	
G311P813#2R2600%&	2.2600	0.3	C	D, F	E, N	
G311P813#2R2900%&	2.2900	0.3	C	D, F	E, N	
G311P813#2R3200%&	2.3200	0.3	C	D, F	E, N	
G311P813#2R3400%&	2.3400	0.3	C	D, F	E, N	
G311P813#2R3700%&	2.3700	0.3	C	D, F	E, N	
G311P813#2R4000%&	2.4000	0.3	C	D, F	E, N	
G311P813#2R4300%&	2.4300	0.3	C	D, F	E, N	
G311P813#2R4600%&	2.4600	0.3	C	D, F	E, N	
G311P813#2R4900%&	2.4900	0.3	C	D, F	E, N	
G311P813#2R5200%&	2.5200	0.3	C	D, F	E, N	
G311P813#2R5500%&	2.5500	0.3	C	D, F	E, N	
G311P813#2R5800%&	2.5800	0.3	C	D, F	E, N	
G311P813#2R6100%&	2.6100	0.3	C	D, F	E, N	
G311P813#2R6400%&	2.6400	0.3	C	D, F	E, N	
G311P813#2R6700%&	2.6700	0.3	C	D, F	E, N	
G311P813#2R7100%&	2.7100	0.3	C	D, F	E, N	
G311P813#2R7400%&	2.7400	0.3	C	D, F	E, N	
G311P813#2R7700%&	2.7700	0.3	C	D, F	E, N	
G311P813#2R8000%&	2.8000	0.3	C	D, F	E, N	
G311P813#2R8400%&	2.8400	0.3	C	D, F	E, N	
G311P813#2R8700%&	2.8700	0.3	C	D, F	E, N	
G311P813#2R9100%&	2.9100	0.3	C	D, F	E, N	
G311P813#2R9400%&	2.9400	0.3	C	D, F	E, N	
G311P813#2R9800%&	2.9800	0.3	C	D, F	E, N	
G311P813#3R0100%&	3.0100	0.3	C	D, F	E, N	
G311P813#3R0500%&	3.0500	0.3	C	D, F	E, N	
G311P813#3R0900%&	3.0900	0.3	C	D, F	E, N	
G311P813#3R1200%&	3.1200	0.3	C	D, F	E, N	
G311P813#3R1600%&	3.1600	0.3	C	D, F	E, N	
G311P813#3R2000%&	3.2000	0.3	C	D, F	E, N	
G311P813#3R2400%&	3.2400	0.3	C	D, F	E, N	
G311P813#3R2800%&	3.2800	0.3	C	D, F	E, N	
G311P813#3R3200%&	3.3200	0.3	C	D, F	E, N	
G311P813#3R3600%&	3.3600	0.3	C	D, F	E, N	
G311P813#3R4000%&	3.4000	0.3	C	D, F	E, N	
G311P813#3R4400%&	3.4400	0.3	C	D, F	E, N	
G311P813#3R4800%&	3.4800	0.3	C	D, F	E, N	
G311P813#3R5200%&	3.5200	0.3	C	D, F	E, N	
G311P813#3R5700%&	3.5700	0.3	C	D, F	E, N	

G311P813#3R6100%&	3.6100	0.3	C	D, F	E, N	
G311P813#3R6500%&	3.6500	0.3	C	D, F	E, N	
G311P813#3R7000%&	3.7000	0.3	C	D, F	E, N	
G311P813#3R7400%&	3.7400	0.3	C	D, F	E, N	
G311P813#3R7900%&	3.7900	0.3	C	D, F	E, N	
G311P813#3R8300%&	3.8300	0.3	C	D, F	E, N	
G311P813#3R8800%&	3.8800	0.3	C	D, F	E, N	
G311P813#3R9200%&	3.9200	0.3	C	D, F	E, N	
G311P813#3R9700%&	3.9700	0.3	C	D, F	E, N	
G311P813#4R0200%&	4.0200	0.3	C	D, F	E, N	
G311P813#4R0700%&	4.0700	0.3	C	D, F	E, N	
G311P813#4R1200%&	4.1200	0.3	C	D, F	E, N	
G311P813#4R1700%&	4.1700	0.3	C	D, F	E, N	
G311P813#4R2200%&	4.2200	0.3	C	D, F	E, N	
G311P813#4R2700%&	4.2700	0.3	C	D, F	E, N	
G311P813#4R3200%&	4.3200	0.3	C	D, F	E, N	
G311P813#4R3700%&	4.3700	0.3	C	D, F	E, N	
G311P813#4R4200%&	4.4200	0.3	C	D, F	E, N	
G311P813#4R4800%&	4.4800	0.3	C	D, F	E, N	
G311P813#4R5300%&	4.5300	0.3	C	D, F	E, N	
G311P813#4R5900%&	4.5900	0.3	C	D, F	E, N	
G311P813#4R6400%&	4.6400	0.3	C	D, F	E, N	
G311P813#4R7000%&	4.7000	0.3	C	D, F	E, N	
G311P813#4R7500%&	4.7500	0.3	C	D, F	E, N	
G311P813#4R8100%&	4.8100	0.3	C	D, F	E, N	
G311P813#4R8700%&	4.8700	0.3	C	D, F	E, N	
G311P813#4R9300%&	4.9300	0.3	C	D, F	E, N	
G311P813#4R9900%&	4.9900	0.3	C	D, F	E, N	
G311P813#5R0500%&	5.0500	0.3	C	B, D, F	E, N	
G311P813#5R1100%&	5.1100	0.3	C	B, D, F	E, N	
G311P813#5R1700%&	5.1700	0.3	C	B, D, F	E, N	
G311P813#5R2300%&	5.2300	0.3	C	B, D, F	E, N	
G311P813#5R3000%&	5.3000	0.3	C	B, D, F	E, N	
G311P813#5R3600%&	5.3600	0.3	C	B, D, F	E, N	
G311P813#5R4200%&	5.4200	0.3	C	B, D, F	E, N	
G311P813#5R4900%&	5.4900	0.3	C	B, D, F	E, N	
G311P813#5R5600%&	5.5600	0.3	C	B, D, F	E, N	
G311P813#5R6200%&	5.6200	0.3	C	B, D, F	E, N	
G311P813#5R6900%&	5.6900	0.3	C	B, D, F	E, N	
G311P813#5R7600%&	5.7600	0.3	C	B, D, F	E, N	
G311P813#5R8300%&	5.8300	0.3	C	B, D, F	E, N	
G311P813#5R9000%&	5.9000	0.3	C	B, D, F	E, N	
G311P813#5R9700%&	5.9700	0.3	C	B, D, F	E, N	
G311P813#6R0400%&	6.0400	0.3	C	B, D, F	E, N	
G311P813#6R1200%&	6.1200	0.3	C	B, D, F	E, N	
G311P813#6R1900%&	6.1900	0.3	C	B, D, F	E, N	
G311P813#6R2600%&	6.2600	0.3	C	B, D, F	E, N	

G311P813#6R3400%&	6.3400	0.3	C	B, D, F	E, N	
G311P813#6R4200%&	6.4200	0.3	C	B, D, F	E, N	
G311P813#6R4900%&	6.4900	0.3	C	B, D, F	E, N	
G311P813#6R5700%&	6.5700	0.3	C	B, D, F	E, N	
G311P813#6R6500%&	6.6500	0.3	C	B, D, F	E, N	
G311P813#6R7300%&	6.7300	0.3	C	B, D, F	E, N	
G311P813#6R8100%&	6.8100	0.3	C	B, D, F	E, N	
G311P813#6R9000%&	6.9000	0.3	C	B, D, F	E, N	
G311P813#6R9800%&	6.9800	0.3	C	B, D, F	E, N	
G311P813#7R0600%&	7.0600	0.3	C	B, D, F	E, N	
G311P813#7R1500%&	7.1500	0.3	C	B, D, F	E, N	
G311P813#7R2300%&	7.2300	0.3	C	B, D, F	E, N	
G311P813#7R3200%&	7.3200	0.3	C	B, D, F	E, N	
G311P813#7R4100%&	7.4100	0.3	C	B, D, F	E, N	
G311P813#7R5000%&	7.5000	0.3	C	B, D, F	E, N	
G311P813#7R5900%&	7.5900	0.3	C	B, D, F	E, N	
G311P813#7R6800%&	7.6800	0.3	C	B, D, F	E, N	
G311P813#7R7700%&	7.7700	0.3	C	B, D, F	E, N	
G311P813#7R8700%&	7.8700	0.3	C	B, D, F	E, N	
G311P813#7R9600%&	7.9600	0.3	C	B, D, F	E, N	
G311P813#8R0600%&	8.0600	0.3	C	B, D, F	E, N	
G311P813#8R1600%&	8.1600	0.3	C	B, D, F	E, N	
G311P813#8R2500%&	8.2500	0.3	C	B, D, F	E, N	
G311P813#8R3500%&	8.3500	0.3	C	B, D, F	E, N	
G311P813#8R4500%&	8.4500	0.3	C	B, D, F	E, N	
G311P813#8R5600%&	8.5600	0.3	C	B, D, F	E, N	
G311P813#8R6600%&	8.6600	0.3	C	B, D, F	E, N	
G311P813#8R7600%&	8.7600	0.3	C	B, D, F	E, N	
G311P813#8R8700%&	8.8700	0.3	C	B, D, F	E, N	
G311P813#8R9800%&	8.9800	0.3	C	B, D, F	E, N	
G311P813#9R0900%&	9.0900	0.3	C	B, D, F	E, N	
G311P813#9R2000%&	9.2000	0.3	C	B, D, F	E, N	
G311P813#9R3100%&	9.3100	0.3	C	B, D, F	E, N	
G311P813#9R4200%&	9.4200	0.3	C	B, D, F	E, N	
G311P813#9R5300%&	9.5300	0.3	C	B, D, F	E, N	
G311P813#9R6500%&	9.6500	0.3	C	B, D, F	E, N	
G311P813#9R7600%&	9.7600	0.3	C	B, D, F	E, N	
G311P813#9R8800%&	9.8800	0.3	C	B, D, F	E, N	
G311P813#10R000%&	10.000	0.3	B, C	B, D, F	E, N	
G311P813#10R100%&	10.100	0.3	B, C	B, D, F	E, N	
G311P813#10R200%&	10.200	0.3	B, C	B, D, F	E, N	
G311P813#10R400%&	10.400	0.3	B, C	B, D, F	E, N	
G311P813#10R500%&	10.500	0.3	B, C	B, D, F	E, N	
G311P813#10R600%&	10.600	0.3	B, C	B, D, F	E, N	
G311P813#10R700%&	10.700	0.3	B, C	B, D, F	E, N	
G311P813#10R900%&	10.900	0.3	B, C	B, D, F	E, N	
G311P813#11R000%&	11.000	0.3	B, C	B, D, F	E, N	

G311P813#11R100%&	11.100	0.3	B, C	B, D, F	E, N	
G311P813#11R300%&	11.300	0.3	B, C	B, D, F	E, N	
G311P813#11R400%&	11.400	0.3	B, C	B, D, F	E, N	
G311P813#11R500%&	11.500	0.3	B, C	B, D, F	E, N	
G311P813#11R700%&	11.700	0.3	B, C	B, D, F	E, N	
G311P813#11R800%&	11.800	0.3	B, C	B, D, F	E, N	
G311P813#12R000%&	12.000	0.3	B, C	B, D, F	E, N	
G311P813#12R100%&	12.100	0.3	B, C	B, D, F	E, N	
G311P813#12R300%&	12.300	0.3	B, C	B, D, F	E, N	
G311P813#12R400%&	12.400	0.3	B, C	B, D, F	E, N	
G311P813#12R600%&	12.600	0.3	B, C	B, D, F	E, N	
G311P813#12R700%&	12.700	0.3	B, C	B, D, F	E, N	
G311P813#12R900%&	12.900	0.3	B, C	B, D, F	E, N	
G311P813#13R000%&	13.000	0.3	B, C	B, D, F	E, N	
G311P813#13R200%&	13.200	0.3	B, C	B, D, F	E, N	
G311P813#13R300%&	13.300	0.3	B, C	B, D, F	E, N	
G311P813#13R500%&	13.500	0.3	B, C	B, D, F	E, N	
G311P813#13R700%&	13.700	0.3	B, C	B, D, F	E, N	
G311P813#13R800%&	13.800	0.3	B, C	B, D, F	E, N	
G311P813#14R000%&	14.000	0.3	B, C	B, D, F	E, N	
G311P813#14R200%&	14.200	0.3	B, C	B, D, F	E, N	
G311P813#14R300%&	14.300	0.3	B, C	B, D, F	E, N	
G311P813#14R500%&	14.500	0.3	B, C	B, D, F	E, N	
G311P813#14R700%&	14.700	0.3	B, C	B, D, F	E, N	
G311P813#14R900%&	14.900	0.3	B, C	B, D, F	E, N	
G311P813#15R000%&	15.000	0.3	B, C	B, D, F	E, N	
G311P813#15R200%&	15.200	0.3	B, C	B, D, F	E, N	
G311P813#15R400%&	15.400	0.3	B, C	B, D, F	E, N	
G311P813#15R600%&	15.600	0.3	B, C	B, D, F	E, N	
G311P813#15R800%&	15.800	0.3	B, C	B, D, F	E, N	
G311P813#16R000%&	16.000	0.3	B, C	B, D, F	E, N	
G311P813#16R200%&	16.200	0.3	B, C	B, D, F	E, N	
G311P813#16R400%&	16.400	0.3	B, C	B, D, F	E, N	
G311P813#16R500%&	16.500	0.3	B, C	B, D, F	E, N	
G311P813#16R700%&	16.700	0.3	B, C	B, D, F	E, N	
G311P813#16R900%&	16.900	0.3	B, C	B, D, F	E, N	
G311P813#17R200%&	17.200	0.3	B, C	B, D, F	E, N	
G311P813#17R400%&	17.400	0.3	B, C	B, D, F	E, N	
G311P813#17R600%&	17.600	0.3	B, C	B, D, F	E, N	
G311P813#17R800%&	17.800	0.3	B, C	B, D, F	E, N	
G311P813#18R000%&	18.000	0.3	B, C	B, D, F	E, N	
G311P813#18R200%&	18.200	0.3	B, C	B, D, F	E, N	
G311P813#18R400%&	18.400	0.3	B, C	B, D, F	E, N	
G311P813#18R700%&	18.700	0.3	B, C	B, D, F	E, N	
G311P813#18R900%&	18.900	0.3	B, C	B, D, F	E, N	
G311P813#19R100%&	19.100	0.3	B, C	B, D, F	E, N	
G311P813#19R300%&	19.300	0.3	B, C	B, D, F	E, N	

G311P813#19R600%&	19.600	0.3	B, C	B, D, F	E, N	
G311P813#19R800%&	19.800	0.3	B, C	B, D, F	E, N	
G311P813#20R000%&	20.000	0.3	B, C	B, D, F	E, N	
G311P813#20R300%&	20.300	0.3	B, C	B, D, F	E, N	
G311P813#20R500%&	20.500	0.3	B, C	B, D, F	E, N	
G311P813#20R800%&	20.800	0.3	B, C	B, D, F	E, N	
G311P813#21R000%&	21.000	0.3	B, C	B, D, F	E, N	
G311P813#21R300%&	21.300	0.3	B, C	B, D, F	E, N	
G311P813#21R500%&	21.500	0.3	B, C	B, D, F	E, N	
G311P813#21R800%&	21.800	0.3	B, C	B, D, F	E, N	
G311P813#22R100%&	22.100	0.3	B, C	B, D, F	E, N	
G311P813#22R300%&	22.300	0.3	B, C	B, D, F	E, N	
G311P813#22R600%&	22.600	0.3	B, C	B, D, F	E, N	
G311P813#22R900%&	22.900	0.3	B, C	B, D, F	E, N	
G311P813#23R200%&	23.200	0.3	B, C	B, D, F	E, N	
G311P813#23R400%&	23.400	0.3	B, C	B, D, F	E, N	
G311P813#23R700%&	23.700	0.3	B, C	B, D, F	E, N	
G311P813#24R000%&	24.000	0.3	B, C	B, D, F	E, N	
G311P813#24R300%&	24.300	0.3	B, C	B, D, F	E, N	
G311P813#24R600%&	24.600	0.3	B, C	B, D, F	E, N	
G311P813#24R900%&	24.900	0.3	B, C	B, D, F	E, N	
G311P813#25R200%&	25.200	0.3	B, C	B, D, F	E, N	
G311P813#25R500%&	25.500	0.3	B, C	B, D, F	E, N	
G311P813#25R800%&	25.800	0.3	B, C	B, D, F	E, N	
G311P813#26R100%&	26.100	0.3	B, C	B, D, F	E, N	
G311P813#26R400%&	26.400	0.3	B, C	B, D, F	E, N	
G311P813#26R700%&	26.700	0.3	B, C	B, D, F	E, N	
G311P813#27R100%&	27.100	0.3	B, C	B, D, F	E, N	
G311P813#27R400%&	27.400	0.3	B, C	B, D, F	E, N	
G311P813#27R700%&	27.700	0.3	B, C	B, D, F	E, N	
G311P813#28R000%&	28.000	0.3	B, C	B, D, F	E, N	
G311P813#28R400%&	28.400	0.3	B, C	B, D, F	E, N	
G311P813#28R700%&	28.700	0.3	B, C	B, D, F	E, N	
G311P813#29R100%&	29.100	0.3	B, C	B, D, F	E, N	
G311P813#29R400%&	29.400	0.3	B, C	B, D, F	E, N	
G311P813#29R800%&	29.800	0.3	B, C	B, D, F	E, N	
G311P813#30R100%&	30.100	0.3	B, C	V,T,Q,A,B,D,F	E, N	
G311P813#30R500%&	30.500	0.3	B, C	V,T,Q,A,B,D,F	E, N	
G311P813#30R900%&	30.900	0.3	B, C	V,T,Q,A,B,D,F	E, N	
G311P813#31R200%&	31.200	0.3	B, C	V,T,Q,A,B,D,F	E, N	
G311P813#31R600%&	31.600	0.3	B, C	V,T,Q,A,B,D,F	E, N	
G311P813#32R000%&	32.000	0.3	B, C	V,T,Q,A,B,D,F	E, N	
G311P813#32R400%&	32.400	0.3	B, C	V,T,Q,A,B,D,F	E, N	
G311P813#32R800%&	32.800	0.3	B, C	V,T,Q,A,B,D,F	E, N	
G311P813#33R200%&	33.200	0.3	B, C	V,T,Q,A,B,D,F	E, N	
G311P813#33R600%&	33.600	0.3	B, C	V,T,Q,A,B,D,F	E, N	
G311P813#34R000%&	34.000	0.3	B, C	V,T,Q,A,B,D,F	E, N	

G311P813#34R400%&	34.400	0.3	B, C	V,T,Q,A,B,D,F	E, N	
G311P813#34R800%&	34.800	0.3	B, C	V,T,Q,A,B,D,F	E, N	
G311P813#35R200%&	35.200	0.3	B, C	V,T,Q,A,B,D,F	E, N	
G311P813#35R700%&	35.700	0.3	B, C	V,T,Q,A,B,D,F	E, N	
G311P813#36R100%&	36.100	0.3	B, C	V,T,Q,A,B,D,F	E, N	
G311P813#36R500%&	36.500	0.3	B, C	V,T,Q,A,B,D,F	E, N	
G311P813#37R000%&	37.000	0.3	B, C	V,T,Q,A,B,D,F	E, N	
G311P813#37R400%&	37.400	0.3	B, C	V,T,Q,A,B,D,F	E, N	
G311P813#37R900%&	37.900	0.3	B, C	V,T,Q,A,B,D,F	E, N	
G311P813#38R300%&	38.300	0.3	B, C	V,T,Q,A,B,D,F	E, N	
G311P813#38R800%&	38.800	0.3	B, C	V,T,Q,A,B,D,F	E, N	
G311P813#39R200%&	39.200	0.3	B, C	V,T,Q,A,B,D,F	E, N	
G311P813#39R700%&	39.700	0.3	B, C	V,T,Q,A,B,D,F	E, N	
G311P813#40R200%&	40.200	0.3	B, C	V,T,Q,A,B,D,F	E, N	
G311P813#40R700%&	40.700	0.3	B, C	V,T,Q,A,B,D,F	E, N	
G311P813#41R200%&	41.200	0.3	B, C	V,T,Q,A,B,D,F	E, N	
G311P813#41R700%&	41.700	0.3	B, C	V,T,Q,A,B,D,F	E, N	
G311P813#42R200%&	42.200	0.3	B, C	V,T,Q,A,B,D,F	E, N	
G311P813#42R700%&	42.700	0.3	B, C	V,T,Q,A,B,D,F	E, N	
G311P813#43R200%&	43.200	0.3	B, C	V,T,Q,A,B,D,F	E, N	
G311P813#43R700%&	43.700	0.3	B, C	V,T,Q,A,B,D,F	E, N	
G311P813#44R200%&	44.200	0.3	B, C	V,T,Q,A,B,D,F	E, N	
G311P813#44R800%&	44.800	0.3	B, C	V,T,Q,A,B,D,F	E, N	
G311P813#45R300%&	45.300	0.3	B, C	V,T,Q,A,B,D,F	E, N	
G311P813#45R900%&	45.900	0.3	B, C	V,T,Q,A,B,D,F	E, N	
G311P813#46R400%&	46.400	0.3	B, C	V,T,Q,A,B,D,F	E, N	
G311P813#47R000%&	47.000	0.3	B, C	V,T,Q,A,B,D,F	E, N	
G311P813#47R500%&	47.500	0.3	B, C	V,T,Q,A,B,D,F	E, N	
G311P813#48R100%&	48.100	0.3	B, C	V,T,Q,A,B,D,F	E, N	
G311P813#48R700%&	48.700	0.3	B, C	V,T,Q,A,B,D,F	E, N	
G311P813#49R300%&	49.300	0.3	B, C	V,T,Q,A,B,D,F	E, N	
G311P813#49R900%&	49.900	0.3	B, C	V,T,Q,A,B,D,F	E, N	
G311P813#50R500%&	50.500	0.3	B, C	V,T,Q,A,B,D,F	E, N	
G311P813#51R100%&	51.100	0.3	B, C	V,T,Q,A,B,D,F	E, N	
G311P813#51R700%&	51.700	0.3	B, C	V,T,Q,A,B,D,F	E, N	
G311P813#52R300%&	52.300	0.3	B, C	V,T,Q,A,B,D,F	E, N	
G311P813#53R000%&	53.000	0.3	B, C	V,T,Q,A,B,D,F	E, N	
G311P813#53R600%&	53.600	0.3	B, C	V,T,Q,A,B,D,F	E, N	
G311P813#54R200%&	54.200	0.3	B, C	V,T,Q,A,B,D,F	E, N	
G311P813#54R900%&	54.900	0.3	B, C	V,T,Q,A,B,D,F	E, N	
G311P813#55R600%&	55.600	0.3	B, C	V,T,Q,A,B,D,F	E, N	
G311P813#56R200%&	56.200	0.3	B, C	V,T,Q,A,B,D,F	E, N	
G311P813#56R900%&	56.900	0.3	B, C	V,T,Q,A,B,D,F	E, N	
G311P813#57R600%&	57.600	0.3	B, C	V,T,Q,A,B,D,F	E, N	
G311P813#58R300%&	58.300	0.3	B, C	V,T,Q,A,B,D,F	E, N	
G311P813#59R000%&	59.000	0.3	B, C	V,T,Q,A,B,D,F	E, N	
G311P813#59R700%&	59.700	0.3	B, C	V,T,Q,A,B,D,F	E, N	

G311P813#60R400%&	60.400	0.3	B, C	V,T,Q,A,B,D,F	E, N	
G311P813#61R200%&	61.200	0.3	B, C	V,T,Q,A,B,D,F	E, N	
G311P813#61R900%&	61.900	0.3	B, C	V,T,Q,A,B,D,F	E, N	
G311P813#62R600%&	62.600	0.3	B, C	V,T,Q,A,B,D,F	E, N	
G311P813#63R400%&	63.400	0.3	B, C	V,T,Q,A,B,D,F	E, N	
G311P813#64R200%&	64.200	0.3	B, C	V,T,Q,A,B,D,F	E, N	
G311P813#64R900%&	64.900	0.3	B, C	V,T,Q,A,B,D,F	E, N	
G311P813#65R700%&	65.700	0.3	B, C	V,T,Q,A,B,D,F	E, N	
G311P813#66R500%&	66.500	0.3	B, C	V,T,Q,A,B,D,F	E, N	
G311P813#67R300%&	67.300	0.3	B, C	V,T,Q,A,B,D,F	E, N	
G311P813#68R100%&	68.100	0.3	B, C	V,T,Q,A,B,D,F	E, N	
G311P813#69R000%&	69.000	0.3	B, C	V,T,Q,A,B,D,F	E, N	
G311P813#69R800%&	69.800	0.3	B, C	V,T,Q,A,B,D,F	E, N	
G311P813#70R600%&	70.600	0.3	B, C	V,T,Q,A,B,D,F	E, N	
G311P813#71R500%&	71.500	0.3	B, C	V,T,Q,A,B,D,F	E, N	
G311P813#72R300%&	72.300	0.3	B, C	V,T,Q,A,B,D,F	E, N	
G311P813#73R200%&	73.200	0.3	B, C	V,T,Q,A,B,D,F	E, N	
G311P813#74R100%&	74.100	0.3	B, C	V,T,Q,A,B,D,F	E, N	
G311P813#75R000%&	75.000	0.3	B, C	V,T,Q,A,B,D,F	E, N	
G311P813#75R900%&	75.900	0.3	B, C	V,T,Q,A,B,D,F	E, N	
G311P813#76R800%&	76.800	0.3	B, C	V,T,Q,A,B,D,F	E, N	
G311P813#77R700%&	77.700	0.3	B, C	V,T,Q,A,B,D,F	E, N	
G311P813#78R700%&	78.700	0.3	B, C	V,T,Q,A,B,D,F	E, N	
G311P813#79R600%&	79.600	0.3	B, C	V,T,Q,A,B,D,F	E, N	
G311P813#80R600%&	80.600	0.3	B, C	V,T,Q,A,B,D,F	E, N	
G311P813#81R600%&	81.600	0.3	B, C	V,T,Q,A,B,D,F	E, N	
G311P813#82R500%&	82.500	0.3	B, C	V,T,Q,A,B,D,F	E, N	
G311P813#83R500%&	83.500	0.3	B, C	V,T,Q,A,B,D,F	E, N	
G311P813#84R500%&	84.500	0.3	B, C	V,T,Q,A,B,D,F	E, N	
G311P813#85R600%&	85.600	0.3	B, C	V,T,Q,A,B,D,F	E, N	
G311P813#86R600%&	86.600	0.3	B, C	V,T,Q,A,B,D,F	E, N	
G311P813#87R600%&	87.600	0.3	B, C	V,T,Q,A,B,D,F	E, N	
G311P813#88R700%&	88.700	0.3	B, C	V,T,Q,A,B,D,F	E, N	
G311P813#89R800%&	89.800	0.3	B, C	V,T,Q,A,B,D,F	E, N	
G311P813#90R900%&	90.900	0.3	B, C	V,T,Q,A,B,D,F	E, N	
G311P813#92R000%&	92.000	0.3	B, C	V,T,Q,A,B,D,F	E, N	
G311P813#93R100%&	93.100	0.3	B, C	V,T,Q,A,B,D,F	E, N	
G311P813#94R200%&	94.200	0.3	B, C	V,T,Q,A,B,D,F	E, N	
G311P813#95R300%&	95.300	0.3	B, C	V,T,Q,A,B,D,F	E, N	
G311P813#96R500%&	96.500	0.3	B, C	V,T,Q,A,B,D,F	E, N	
G311P813#97R600%&	97.600	0.3	B, C	V,T,Q,A,B,D,F	E, N	
G311P813#98R800%&	98.800	0.3	B, C	V,T,Q,A,B,D,F	E, N	
G311P813#100R00%&	100.00	0.3	A, B, C	V,T,Q,A,B,D,F	E, N	WIL
G311P813#101R00%&	101.00	0.3	A, B, C	V,T,Q,A,B,D,F	E, N	WIL
G311P813#102R00%&	102.00	0.3	A, B, C	V,T,Q,A,B,D,F	E, N	WIL
G311P813#104R00%&	104.00	0.3	A, B, C	V,T,Q,A,B,D,F	E, N	WIL
G311P813#105R00%&	105.00	0.3	A, B, C	V,T,Q,A,B,D,F	E, N	WIL

G311P813#106R00%&	106.00	0.3	A, B, C	V,T,Q,A,B,D,F	E, N	WIL
G311P813#107R00%&	107.00	0.3	A, B, C	V,T,Q,A,B,D,F	E, N	WIL
G311P813#109R00%&	109.00	0.3	A, B, C	V,T,Q,A,B,D,F	E, N	WIL
G311P813#110R00%&	110.00	0.3	A, B, C	V,T,Q,A,B,D,F	E, N	WIL
G311P813#111R00%&	111.00	0.3	A, B, C	V,T,Q,A,B,D,F	E, N	WIL
G311P813#113R00%&	113.00	0.3	A, B, C	V,T,Q,A,B,D,F	E, N	WIL
G311P813#114R00%&	114.00	0.3	A, B, C	V,T,Q,A,B,D,F	E, N	WIL
G311P813#115R00%&	115.00	0.3	A, B, C	V,T,Q,A,B,D,F	E, N	WIL
G311P813#117R00%&	117.00	0.3	A, B, C	V,T,Q,A,B,D,F	E, N	WIL
G311P813#118R00%&	118.00	0.3	A, B, C	V,T,Q,A,B,D,F	E, N	WIL
G311P813#120R00%&	120.00	0.3	A, B, C	V,T,Q,A,B,D,F	E, N	WIL
G311P813#121R00%&	121.00	0.3	A, B, C	V,T,Q,A,B,D,F	E, N	WIL
G311P813#123R00%&	123.00	0.3	A, B, C	V,T,Q,A,B,D,F	E, N	WIL
G311P813#124R00%&	124.00	0.3	A, B, C	V,T,Q,A,B,D,F	E, N	WIL
G311P813#126R00%&	126.00	0.3	A, B, C	V,T,Q,A,B,D,F	E, N	WIL
G311P813#127R00%&	127.00	0.3	A, B, C	V,T,Q,A,B,D,F	E, N	WIL
G311P813#129R00%&	129.00	0.3	A, B, C	V,T,Q,A,B,D,F	E, N	WIL
G311P813#130R00%&	130.00	0.3	A, B, C	V,T,Q,A,B,D,F	E, N	WIL
G311P813#132R00%&	132.00	0.3	A, B, C	V,T,Q,A,B,D,F	E, N	WIL
G311P813#133R00%&	133.00	0.3	A, B, C	V,T,Q,A,B,D,F	E, N	WIL
G311P813#135R00%&	135.00	0.3	A, B, C	V,T,Q,A,B,D,F	E, N	WIL
G311P813#137R00%&	137.00	0.3	A, B, C	V,T,Q,A,B,D,F	E, N	WIL
G311P813#138R00%&	138.00	0.3	A, B, C	V,T,Q,A,B,D,F	E, N	WIL
G311P813#140R00%&	140.00	0.3	A, B, C	V,T,Q,A,B,D,F	E, N	WIL
G311P813#142R00%&	142.00	0.3	A, B, C	V,T,Q,A,B,D,F	E, N	WIL
G311P813#143R00%&	143.00	0.3	A, B, C	V,T,Q,A,B,D,F	E, N	WIL
G311P813#145R00%&	145.00	0.3	A, B, C	V,T,Q,A,B,D,F	E, N	WIL
G311P813#147R00%&	147.00	0.3	A, B, C	V,T,Q,A,B,D,F	E, N	WIL
G311P813#149R00%&	149.00	0.3	A, B, C	V,T,Q,A,B,D,F	E, N	WIL
G311P813#150R00%&	150.00	0.3	A, B, C	V,T,Q,A,B,D,F	E, N	WIL
G311P813#152R00%&	152.00	0.3	A, B, C	V,T,Q,A,B,D,F	E, N	WIL
G311P813#154R00%&	154.00	0.3	A, B, C	V,T,Q,A,B,D,F	E, N	WIL
G311P813#156R00%&	156.00	0.3	A, B, C	V,T,Q,A,B,D,F	E, N	WIL
G311P813#158R00%&	158.00	0.3	A, B, C	V,T,Q,A,B,D,F	E, N	WIL
G311P813#160R00%&	160.00	0.3	A, B, C	V,T,Q,A,B,D,F	E, N	WIL
G311P813#162R00%&	162.00	0.3	A, B, C	V,T,Q,A,B,D,F	E, N	WIL
G311P813#164R00%&	164.00	0.3	A, B, C	V,T,Q,A,B,D,F	E, N	WIL
G311P813#165R00%&	165.00	0.3	A, B, C	V,T,Q,A,B,D,F	E, N	WIL
G311P813#167R00%&	167.00	0.3	A, B, C	V,T,Q,A,B,D,F	E, N	WIL
G311P813#169R00%&	169.00	0.3	A, B, C	V,T,Q,A,B,D,F	E, N	WIL
G311P813#172R00%&	172.00	0.3	A, B, C	V,T,Q,A,B,D,F	E, N	WIL
G311P813#174R00%&	174.00	0.3	A, B, C	V,T,Q,A,B,D,F	E, N	WIL
G311P813#176R00%&	176.00	0.3	A, B, C	V,T,Q,A,B,D,F	E, N	WIL
G311P813#178R00%&	178.00	0.3	A, B, C	V,T,Q,A,B,D,F	E, N	WIL
G311P813#180R00%&	180.00	0.3	A, B, C	V,T,Q,A,B,D,F	E, N	WIL
G311P813#182R00%&	182.00	0.3	A, B, C	V,T,Q,A,B,D,F	E, N	WIL
G311P813#184R00%&	184.00	0.3	A, B, C	V,T,Q,A,B,D,F	E, N	WIL

G311P813#187R00%&	187.00	0.3	A, B, C	V,T,Q,A,B,D,F	E, N	WIL
G311P813#189R00%&	189.00	0.3	A, B, C	V,T,Q,A,B,D,F	E, N	WIL
G311P813#191R00%&	191.00	0.3	A, B, C	V,T,Q,A,B,D,F	E, N	WIL
G311P813#193R00%&	193.00	0.3	A, B, C	V,T,Q,A,B,D,F	E, N	WIL
G311P813#196R00%&	196.00	0.3	A, B, C	V,T,Q,A,B,D,F	E, N	WIL
G311P813#198R00%&	198.00	0.3	A, B, C	V,T,Q,A,B,D,F	E, N	WIL
G311P813#200R00%&	200.00	0.3	A, B, C	V,T,Q,A,B,D,F	E, N	WIL
G311P813#203R00%&	203.00	0.3	A, B, C	V,T,Q,A,B,D,F	E, N	WIL
G311P813#205R00%&	205.00	0.3	A, B, C	V,T,Q,A,B,D,F	E, N	WIL
G311P813#208R00%&	208.00	0.3	A, B, C	V,T,Q,A,B,D,F	E, N	WIL
G311P813#210R00%&	210.00	0.3	A, B, C	V,T,Q,A,B,D,F	E, N	WIL
G311P813#213R00%&	213.00	0.3	A, B, C	V,T,Q,A,B,D,F	E, N	WIL
G311P813#215R00%&	215.00	0.3	A, B, C	V,T,Q,A,B,D,F	E, N	WIL
G311P813#218R00%&	218.00	0.3	A, B, C	V,T,Q,A,B,D,F	E, N	WIL
G311P813#221R00%&	221.00	0.3	A, B, C	V,T,Q,A,B,D,F	E, N	WIL
G311P813#223R00%&	223.00	0.3	A, B, C	V,T,Q,A,B,D,F	E, N	WIL
G311P813#226R00%&	226.00	0.3	A, B, C	V,T,Q,A,B,D,F	E, N	WIL
G311P813#229R00%&	229.00	0.3	A, B, C	V,T,Q,A,B,D,F	E, N	WIL
G311P813#232R00%&	232.00	0.3	A, B, C	V,T,Q,A,B,D,F	E, N	WIL
G311P813#234R00%&	234.00	0.3	A, B, C	V,T,Q,A,B,D,F	E, N	WIL
G311P813#237R00%&	237.00	0.3	A, B, C	V,T,Q,A,B,D,F	E, N	WIL
G311P813#240R00%&	240.00	0.3	A, B, C	V,T,Q,A,B,D,F	E, N	WIL
G311P813#243R00%&	243.00	0.3	A, B, C	V,T,Q,A,B,D,F	E, N	WIL
G311P813#246R00%&	246.00	0.3	A, B, C	V,T,Q,A,B,D,F	E, N	WIL
G311P813#249R00%&	249.00	0.3	A, B, C	V,T,Q,A,B,D,F	E, N	WIL
G311P813#252R00%&	252.00	0.3	A, B, C	V,T,Q,A,B,D,F	E, N	WIL
G311P813#255R00%&	255.00	0.3	A, B, C	V,T,Q,A,B,D,F	E, N	WIL
G311P813#258R00%&	258.00	0.3	A, B, C	V,T,Q,A,B,D,F	E, N	WIL
G311P813#261R00%&	261.00	0.3	A, B, C	V,T,Q,A,B,D,F	E, N	WIL
G311P813#264R00%&	264.00	0.3	A, B, C	V,T,Q,A,B,D,F	E, N	WIL
G311P813#267R00%&	267.00	0.3	A, B, C	V,T,Q,A,B,D,F	E, N	WIL
G311P813#271R00%&	271.00	0.3	A, B, C	V,T,Q,A,B,D,F	E, N	WIL
G311P813#274R00%&	274.00	0.3	A, B, C	V,T,Q,A,B,D,F	E, N	WIL
G311P813#277R00%&	277.00	0.3	A, B, C	V,T,Q,A,B,D,F	E, N	WIL
G311P813#280R00%&	280.00	0.3	A, B, C	V,T,Q,A,B,D,F	E, N	WIL
G311P813#284R00%&	284.00	0.3	A, B, C	V,T,Q,A,B,D,F	E, N	WIL
G311P813#287R00%&	287.00	0.3	A, B, C	V,T,Q,A,B,D,F	E, N	WIL
G311P813#291R00%&	291.00	0.3	A, B, C	V,T,Q,A,B,D,F	E, N	WIL
G311P813#294R00%&	294.00	0.3	A, B, C	V,T,Q,A,B,D,F	E, N	WIL
G311P813#298R00%&	298.00	0.3	A, B, C	V,T,Q,A,B,D,F	E, N	WIL
G311P813#301R00%&	301.00	0.3	A, B, C	V,T,Q,A,B,D,F	E, N	WIL
G311P813#305R00%&	305.00	0.3	A, B, C	V,T,Q,A,B,D,F	E, N	WIL
G311P813#309R00%&	309.00	0.3	A, B, C	V,T,Q,A,B,D,F	E, N	WIL
G311P813#312R00%&	312.00	0.3	A, B, C	V,T,Q,A,B,D,F	E, N	WIL
G311P813#316R00%&	316.00	0.3	A, B, C	V,T,Q,A,B,D,F	E, N	WIL
G311P813#320R00%&	320.00	0.3	A, B, C	V,T,Q,A,B,D,F	E, N	WIL
G311P813#324R00%&	324.00	0.3	A, B, C	V,T,Q,A,B,D,F	E, N	WIL

G311P813#328R00%&	328.00	0.3	A, B, C	V,T,Q,A,B,D,F	E, N	WIL
G311P813#332R00%&	332.00	0.3	A, B, C	V,T,Q,A,B,D,F	E, N	WIL
G311P813#336R00%&	336.00	0.3	A, B, C	V,T,Q,A,B,D,F	E, N	WIL
G311P813#340R00%&	340.00	0.3	A, B, C	V,T,Q,A,B,D,F	E, N	WIL
G311P813#344R00%&	344.00	0.3	A, B, C	V,T,Q,A,B,D,F	E, N	WIL
G311P813#348R00%&	348.00	0.3	A, B, C	V,T,Q,A,B,D,F	E, N	WIL
G311P813#352R00%&	352.00	0.3	A, B, C	V,T,Q,A,B,D,F	E, N	WIL
G311P813#357R00%&	357.00	0.3	A, B, C	V,T,Q,A,B,D,F	E, N	WIL
G311P813#361R00%&	361.00	0.3	A, B, C	V,T,Q,A,B,D,F	E, N	WIL
G311P813#365R00%&	365.00	0.3	A, B, C	V,T,Q,A,B,D,F	E, N	WIL
G311P813#370R00%&	370.00	0.3	A, B, C	V,T,Q,A,B,D,F	E, N	WIL
G311P813#374R00%&	374.00	0.3	A, B, C	V,T,Q,A,B,D,F	E, N	WIL
G311P813#379R00%&	379.00	0.3	A, B, C	V,T,Q,A,B,D,F	E, N	WIL
G311P813#383R00%&	383.00	0.3	A, B, C	V,T,Q,A,B,D,F	E, N	WIL
G311P813#388R00%&	388.00	0.3	A, B, C	V,T,Q,A,B,D,F	E, N	WIL
G311P813#392R00%&	392.00	0.3	A, B, C	V,T,Q,A,B,D,F	E, N	WIL
G311P813#397R00%&	397.00	0.3	A, B, C	V,T,Q,A,B,D,F	E, N	WIL
G311P813#402R00%&	402.00	0.3	A, B, C	V,T,Q,A,B,D,F	E, N	WIL
G311P813#407R00%&	407.00	0.3	A, B, C	V,T,Q,A,B,D,F	E, N	WIL
G311P813#412R00%&	412.00	0.3	A, B, C	V,T,Q,A,B,D,F	E, N	WIL
G311P813#417R00%&	417.00	0.3	A, B, C	V,T,Q,A,B,D,F	E, N	WIL
G311P813#422R00%&	422.00	0.3	A, B, C	V,T,Q,A,B,D,F	E, N	WIL
G311P813#427R00%&	427.00	0.3	A, B, C	V,T,Q,A,B,D,F	E, N	WIL
G311P813#432R00%&	432.00	0.3	A, B, C	V,T,Q,A,B,D,F	E, N	WIL
G311P813#437R00%&	437.00	0.3	A, B, C	V,T,Q,A,B,D,F	E, N	WIL
G311P813#442R00%&	442.00	0.3	A, B, C	V,T,Q,A,B,D,F	E, N	WIL
G311P813#448R00%&	448.00	0.3	A, B, C	V,T,Q,A,B,D,F	E, N	WIL
G311P813#453R00%&	453.00	0.3	A, B, C	V,T,Q,A,B,D,F	E, N	WIL
G311P813#459R00%&	459.00	0.3	A, B, C	V,T,Q,A,B,D,F	E, N	WIL
G311P813#464R00%&	464.00	0.3	A, B, C	V,T,Q,A,B,D,F	E, N	WIL
G311P813#470R00%&	470.00	0.3	A, B, C	V,T,Q,A,B,D,F	E, N	WIL
G311P813#475R00%&	475.00	0.3	A, B, C	V,T,Q,A,B,D,F	E, N	WIL
G311P813#481R00%&	481.00	0.3	A, B, C	V,T,Q,A,B,D,F	E, N	WIL
G311P813#487R00%&	487.00	0.3	A, B, C	V,T,Q,A,B,D,F	E, N	WIL
G311P813#493R00%&	493.00	0.3	A, B, C	V,T,Q,A,B,D,F	E, N	WIL
G311P813#499R00%&	499.00	0.3	A, B, C	V,T,Q,A,B,D,F	E, N	WIL
G311P813#505R00%&	505.00	0.3	A, B, C	V,T,Q,A,B,D,F	E, N	WIL
G311P813#511R00%&	511.00	0.3	A, B, C	V,T,Q,A,B,D,F	E, N	WIL
G311P813#517R00%&	517.00	0.3	A, B, C	V,T,Q,A,B,D,F	E, N	WIL
G311P813#523R00%&	523.00	0.3	A, B, C	V,T,Q,A,B,D,F	E, N	WIL
G311P813#530R00%&	530.00	0.3	A, B, C	V,T,Q,A,B,D,F	E, N	WIL
G311P813#536R00%&	536.00	0.3	A, B, C	V,T,Q,A,B,D,F	E, N	WIL
G311P813#542R00%&	542.00	0.3	A, B, C	V,T,Q,A,B,D,F	E, N	WIL
G311P813#549R00%&	549.00	0.3	A, B, C	V,T,Q,A,B,D,F	E, N	WIL
G311P813#556R00%&	556.00	0.3	A, B, C	V,T,Q,A,B,D,F	E, N	WIL
G311P813#562R00%&	562.00	0.3	A, B, C	V,T,Q,A,B,D,F	E, N	WIL
G311P813#569R00%&	569.00	0.3	A, B, C	V,T,Q,A,B,D,F	E, N	WIL

G311P813#576R00%&	576.00	0.3	A, B, C	V,T,Q,A,B,D,F	E, N	WIL
G311P813#583R00%&	583.00	0.3	A, B, C	V,T,Q,A,B,D,F	E, N	WIL
G311P813#590R00%&	590.00	0.3	A, B, C	V,T,Q,A,B,D,F	E, N	WIL
G311P813#597R00%&	597.00	0.3	A, B, C	V,T,Q,A,B,D,F	E, N	WIL
G311P813#604R00%&	604.00	0.3	A, B, C	V,T,Q,A,B,D,F	E, N	WIL
G311P813#612R00%&	612.00	0.3	A, B, C	V,T,Q,A,B,D,F	E, N	WIL
G311P813#619R00%&	619.00	0.3	A, B, C	V,T,Q,A,B,D,F	E, N	WIL
G311P813#626R00%&	626.00	0.3	A, B, C	V,T,Q,A,B,D,F	E, N	WIL
G311P813#634R00%&	634.00	0.3	A, B, C	V,T,Q,A,B,D,F	E, N	WIL
G311P813#642R00%&	642.00	0.3	A, B, C	V,T,Q,A,B,D,F	E, N	WIL
G311P813#649R00%&	649.00	0.3	A, B, C	V,T,Q,A,B,D,F	E, N	WIL
G311P813#657R00%&	657.00	0.3	A, B, C	V,T,Q,A,B,D,F	E, N	WIL
G311P813#665R00%&	665.00	0.3	A, B, C	V,T,Q,A,B,D,F	E, N	WIL
G311P813#673R00%&	673.00	0.3	A, B, C	V,T,Q,A,B,D,F	E, N	WIL
G311P813#681R00%&	681.00	0.3	A, B, C	V,T,Q,A,B,D,F	E, N	WIL
G311P813#690R00%&	690.00	0.3	A, B, C	V,T,Q,A,B,D,F	E, N	WIL
G311P813#698R00%&	698.00	0.3	A, B, C	V,T,Q,A,B,D,F	E, N	WIL
G311P813#706R00%&	706.00	0.3	A, B, C	V,T,Q,A,B,D,F	E, N	WIL
G311P813#715R00%&	715.00	0.3	A, B, C	V,T,Q,A,B,D,F	E, N	WIL
G311P813#723R00%&	723.00	0.3	A, B, C	V,T,Q,A,B,D,F	E, N	WIL
G311P813#732R00%&	732.00	0.3	A, B, C	V,T,Q,A,B,D,F	E, N	WIL
G311P813#741R00%&	741.00	0.3	A, B, C	V,T,Q,A,B,D,F	E, N	WIL
G311P813#750R00%&	750.00	0.3	A, B, C	V,T,Q,A,B,D,F	E, N	WIL
G311P813#759R00%&	759.00	0.3	A, B, C	V,T,Q,A,B,D,F	E, N	WIL
G311P813#767R00%&	767.00	0.3	A, B, C	V,T,Q,A,B,D,F	E, N	WIL
G311P813#776R00%&	776.00	0.3	A, B, C	V,T,Q,A,B,D,F	E, N	WIL
G311P813#786R00%&	786.00	0.3	A, B, C	V,T,Q,A,B,D,F	E, N	WIL
G311P813#795R00%&	795.00	0.3	A, B, C	V,T,Q,A,B,D,F	E, N	WIL
G311P813#805R00%&	805.00	0.3	A, B, C	V,T,Q,A,B,D,F	E, N	WIL
G311P813#815R00%&	815.00	0.3	A, B, C	V,T,Q,A,B,D,F	E, N	WIL
G311P813#824R00%&	824.00	0.3	A, B, C	V,T,Q,A,B,D,F	E, N	WIL
G311P813#834R00%&	834.00	0.3	A, B, C	V,T,Q,A,B,D,F	E, N	WIL
G311P813#844R00%&	844.00	0.3	A, B, C	V,T,Q,A,B,D,F	E, N	WIL
G311P813#855R00%&	855.00	0.3	A, B, C	V,T,Q,A,B,D,F	E, N	WIL
G311P813#865R00%&	865.00	0.3	A, B, C	V,T,Q,A,B,D,F	E, N	WIL
G311P813#875R00%&	875.00	0.3	A, B, C	V,T,Q,A,B,D,F	E, N	WIL
G311P813#886R00%&	886.00	0.3	A, B, C	V,T,Q,A,B,D,F	E, N	WIL
G311P813#898R00%&	898.00	0.3	A, B, C	V,T,Q,A,B,D,F	E, N	WIL
G311P813#908R00%&	908.00	0.3	A, B, C	V,T,Q,A,B,D,F	E, N	WIL
G311P813#919R00%&	919.00	0.3	A, B, C	V,T,Q,A,B,D,F	E, N	WIL
G311P813#930R00%&	930.00	0.3	A, B, C	V,T,Q,A,B,D,F	E, N	WIL
G311P813#941R00%&	941.00	0.3	A, B, C	V,T,Q,A,B,D,F	E, N	WIL
G311P813#952R00%&	952.00	0.3	A, B, C	V,T,Q,A,B,D,F	E, N	WIL
G311P813#964R00%&	964.00	0.3	A, B, C	V,T,Q,A,B,D,F	E, N	WIL
G311P813#975R00%&	975.00	0.3	A, B, C	V,T,Q,A,B,D,F	E, N	WIL
G311P813#988R00%&	988.00	0.3	A, B, C	V,T,Q,A,B,D,F	E, N	WIL
G311P813#1K000%&	1,000.0	0.3	A, B, C	V,T,Q,A,B,D,F	E, N	WIL

G311P813#1K100%&	1,010.0	0.3	A, B, C	V,T,Q,A,B,D,F	E, N	WIL
G311P813#1K200%&	1,020.0	0.3	A, B, C	V,T,Q,A,B,D,F	E, N	WIL
G311P813#1K400%&	1,040.0	0.3	A, B, C	V,T,Q,A,B,D,F	E, N	WIL
G311P813#1K500%&	1,050.0	0.3	A, B, C	V,T,Q,A,B,D,F	E, N	WIL
G311P813#1K600%&	1,060.0	0.3	A, B, C	V,T,Q,A,B,D,F	E, N	WIL
G311P813#1K700%&	1,070.0	0.3	A, B, C	V,T,Q,A,B,D,F	E, N	WIL
G311P813#1K900%&	1,090.0	0.3	A, B, C	V,T,Q,A,B,D,F	E, N	WIL
G311P813#1K000%&	1,100.0	0.3	A, B, C	V,T,Q,A,B,D,F	E, N	WIL
G311P813#1K100%&	1,110.0	0.3	A, B, C	V,T,Q,A,B,D,F	E, N	WIL
G311P813#1K300%&	1,130.0	0.3	A, B, C	V,T,Q,A,B,D,F	E, N	WIL
G311P813#1K400%&	1,140.0	0.3	A, B, C	V,T,Q,A,B,D,F	E, N	WIL
G311P813#1K500%&	1,150.0	0.3	A, B, C	V,T,Q,A,B,D,F	E, N	WIL
G311P813#1K700%&	1,170.0	0.3	A, B, C	V,T,Q,A,B,D,F	E, N	WIL
G311P813#1K800%&	1,180.0	0.3	A, B, C	V,T,Q,A,B,D,F	E, N	WIL
G311P813#1K000%&	1,200.0	0.3	A, B, C	V,T,Q,A,B,D,F	E, N	WIL
G311P813#1K100%&	1,210.0	0.3	A, B, C	V,T,Q,A,B,D,F	E, N	WIL
G311P813#1K300%&	1,230.0	0.3	A, B, C	V,T,Q,A,B,D,F	E, N	WIL
G311P813#1K400%&	1,240.0	0.3	A, B, C	V,T,Q,A,B,D,F	E, N	WIL
G311P813#1K600%&	1,260.0	0.3	A, B, C	V,T,Q,A,B,D,F	E, N	WIL
G311P813#1K700%&	1,270.0	0.3	A, B, C	V,T,Q,A,B,D,F	E, N	WIL
G311P813#1K900%&	1,290.0	0.3	A, B, C	V,T,Q,A,B,D,F	E, N	WIL
G311P813#1K000%&	1,300.0	0.3	A, B, C	V,T,Q,A,B,D,F	E, N	WIL
G311P813#1K200%&	1,320.0	0.3	A, B, C	V,T,Q,A,B,D,F	E, N	WIL
G311P813#1K300%&	1,330.0	0.3	A, B, C	V,T,Q,A,B,D,F	E, N	WIL
G311P813#1K500%&	1,350.0	0.3	A, B, C	V,T,Q,A,B,D,F	E, N	WIL
G311P813#1K700%&	1,370.0	0.3	A, B, C	V,T,Q,A,B,D,F	E, N	WIL
G311P813#1K800%&	1,380.0	0.3	A, B, C	V,T,Q,A,B,D,F	E, N	WIL
G311P813#1K000%&	1,400.0	0.3	A, B, C	V,T,Q,A,B,D,F	E, N	WIL
G311P813#1K200%&	1,420.0	0.3	A, B, C	V,T,Q,A,B,D,F	E, N	WIL
G311P813#1K300%&	1,430.0	0.3	A, B, C	V,T,Q,A,B,D,F	E, N	WIL
G311P813#1K500%&	1,450.0	0.3	A, B, C	V,T,Q,A,B,D,F	E, N	WIL
G311P813#1K700%&	1,470.0	0.3	A, B, C	V,T,Q,A,B,D,F	E, N	WIL
G311P813#1K900%&	1,490.0	0.3	A, B, C	V,T,Q,A,B,D,F	E, N	WIL
G311P813#1K000%&	1,500.0	0.3	A, B, C	V,T,Q,A,B,D,F	E, N	WIL
G311P813#1K200%&	1,520.0	0.3	A, B, C	V,T,Q,A,B,D,F	E, N	WIL
G311P813#1K400%&	1,540.0	0.3	A, B, C	V,T,Q,A,B,D,F	E, N	WIL
G311P813#1K600%&	1,560.0	0.3	A, B, C	V,T,Q,A,B,D,F	E, N	WIL
G311P813#1K800%&	1,580.0	0.3	A, B, C	V,T,Q,A,B,D,F	E, N	WIL
G311P813#1K000%&	1,600.0	0.3	A, B, C	V,T,Q,A,B,D,F	E, N	WIL
G311P813#1K200%&	1,620.0	0.3	A, B, C	V,T,Q,A,B,D,F	E, N	WIL
G311P813#1K400%&	1,640.0	0.3	A, B, C	V,T,Q,A,B,D,F	E, N	WIL
G311P813#1K500%&	1,650.0	0.3	A, B, C	V,T,Q,A,B,D,F	E, N	WIL
G311P813#1K700%&	1,670.0	0.3	A, B, C	V,T,Q,A,B,D,F	E, N	WIL
G311P813#1K900%&	1,690.0	0.3	A, B, C	V,T,Q,A,B,D,F	E, N	WIL
G311P813#1K200%&	1,720.0	0.3	A, B, C	V,T,Q,A,B,D,F	E, N	WIL
G311P813#1K400%&	1,740.0	0.3	A, B, C	V,T,Q,A,B,D,F	E, N	WIL
G311P813#1K600%&	1,760.0	0.3	A, B, C	V,T,Q,A,B,D,F	E, N	WIL

G311P813#1K800%&	1,780.0	0.3	A, B, C	V,T,Q,A,B,D,F	E, N	WIL
G311P813#1K000%&	1,800.0	0.3	A, B, C	V,T,Q,A,B,D,F	E, N	WIL
G311P813#1K200%&	1,820.0	0.3	A, B, C	V,T,Q,A,B,D,F	E, N	WIL
G311P813#1K400%&	1,840.0	0.3	A, B, C	V,T,Q,A,B,D,F	E, N	WIL
G311P813#1K700%&	1,870.0	0.3	A, B, C	V,T,Q,A,B,D,F	E, N	WIL
G311P813#1K900%&	1,890.0	0.3	A, B, C	V,T,Q,A,B,D,F	E, N	WIL
G311P813#1K100%&	1,910.0	0.3	A, B, C	V,T,Q,A,B,D,F	E, N	WIL
G311P813#1K300%&	1,930.0	0.3	A, B, C	V,T,Q,A,B,D,F	E, N	WIL
G311P813#1K600%&	1,960.0	0.3	A, B, C	V,T,Q,A,B,D,F	E, N	WIL
G311P813#1K800%&	1,980.0	0.3	A, B, C	V,T,Q,A,B,D,F	E, N	WIL
G311P813#2K000%&	2,000.0	0.3	A, B, C	V,T,Q,A,B,D,F	E, N	WIL
G311P813#2K300%&	2,030.0	0.3	A, B, C	V,T,Q,A,B,D,F	E, N	WIL
G311P813#2K500%&	2,050.0	0.3	A, B, C	V,T,Q,A,B,D,F	E, N	WIL
G311P813#2K800%&	2,080.0	0.3	A, B, C	V,T,Q,A,B,D,F	E, N	WIL
G311P813#2K000%&	2,100.0	0.3	A, B, C	V,T,Q,A,B,D,F	E, N	WIL
G311P813#2K300%&	2,130.0	0.3	A, B, C	V,T,Q,A,B,D,F	E, N	WIL
G311P813#2K500%&	2,150.0	0.3	A, B, C	V,T,Q,A,B,D,F	E, N	WIL
G311P813#2K800%&	2,180.0	0.3	A, B, C	V,T,Q,A,B,D,F	E, N	WIL
G311P813#2K100%&	2,210.0	0.3	A, B, C	V,T,Q,A,B,D,F	E, N	WIL
G311P813#2K300%&	2,230.0	0.3	A, B, C	V,T,Q,A,B,D,F	E, N	WIL
G311P813#2K600%&	2,260.0	0.3	A, B, C	V,T,Q,A,B,D,F	E, N	WIL
G311P813#2K900%&	2,290.0	0.3	A, B, C	V,T,Q,A,B,D,F	E, N	WIL
G311P813#2K200%&	2,320.0	0.3	A, B, C	V,T,Q,A,B,D,F	E, N	WIL
G311P813#2K400%&	2,340.0	0.3	A, B, C	V,T,Q,A,B,D,F	E, N	WIL
G311P813#2K700%&	2,370.0	0.3	A, B, C	V,T,Q,A,B,D,F	E, N	WIL
G311P813#2K000%&	2,400.0	0.3	A, B, C	V,T,Q,A,B,D,F	E, N	WIL
G311P813#2K300%&	2,430.0	0.3	A, B, C	V,T,Q,A,B,D,F	E, N	WIL
G311P813#2K600%&	2,460.0	0.3	A, B, C	V,T,Q,A,B,D,F	E, N	WIL
G311P813#2K900%&	2,490.0	0.3	A, B, C	V,T,Q,A,B,D,F	E, N	WIL
G311P813#2K200%&	2,520.0	0.3	A, B, C	V,T,Q,A,B,D,F	E, N	WIL
G311P813#2K500%&	2,550.0	0.3	A, B, C	V,T,Q,A,B,D,F	E, N	WIL
G311P813#2K800%&	2,580.0	0.3	A, B, C	V,T,Q,A,B,D,F	E, N	WIL
G311P813#2K100%&	2,610.0	0.3	A, B, C	V,T,Q,A,B,D,F	E, N	WIL
G311P813#2K400%&	2,640.0	0.3	A, B, C	V,T,Q,A,B,D,F	E, N	WIL
G311P813#2K700%&	2,670.0	0.3	A, B, C	V,T,Q,A,B,D,F	E, N	WIL
G311P813#2K100%&	2,710.0	0.3	A, B, C	V,T,Q,A,B,D,F	E, N	WIL
G311P813#2K400%&	2,740.0	0.3	A, B, C	V,T,Q,A,B,D,F	E, N	WIL
G311P813#2K700%&	2,770.0	0.3	A, B, C	V,T,Q,A,B,D,F	E, N	WIL
G311P813#2K000%&	2,800.0	0.3	A, B, C	V,T,Q,A,B,D,F	E, N	WIL
G311P813#2K400%&	2,840.0	0.3	A, B, C	V,T,Q,A,B,D,F	E, N	WIL
G311P813#2K700%&	2,870.0	0.3	A, B, C	V,T,Q,A,B,D,F	E, N	WIL
G311P813#2K100%&	2,910.0	0.3	A, B, C	V,T,Q,A,B,D,F	E, N	WIL
G311P813#2K400%&	2,940.0	0.3	A, B, C	V,T,Q,A,B,D,F	E, N	WIL
G311P813#2K800%&	2,980.0	0.3	A, B, C	V,T,Q,A,B,D,F	E, N	WIL
G311P813#3K100%&	3,010.0	0.3	A, B, C	V,T,Q,A,B,D,F	E, N	WIL
G311P813#3K500%&	3,050.0	0.3	A, B, C	V,T,Q,A,B,D,F	E, N	WIL
G311P813#3K900%&	3,090.0	0.3	A, B, C	V,T,Q,A,B,D,F	E, N	WIL

G311P813#3K200%&	3,120.0	0.3	A, B, C	V,T,Q,A,B,D,F	E, N	WIL
G311P813#3K600%&	3,160.0	0.3	A, B, C	V,T,Q,A,B,D,F	E, N	WIL
G311P813#3K000%&	3,200.0	0.3	A, B, C	V,T,Q,A,B,D,F	E, N	WIL
G311P813#3K400%&	3,240.0	0.3	A, B, C	V,T,Q,A,B,D,F	E, N	WIL
G311P813#3K800%&	3,280.0	0.3	A, B, C	V,T,Q,A,B,D,F	E, N	WIL
G311P813#3K200%&	3,320.0	0.3	A, B, C	V,T,Q,A,B,D,F	E, N	WIL
G311P813#3K600%&	3,360.0	0.3	A, B, C	V,T,Q,A,B,D,F	E, N	WIL
G311P813#3K000%&	3,400.0	0.3	A, B, C	V,T,Q,A,B,D,F	E, N	WIL
G311P813#3K400%&	3,440.0	0.3	A, B, C	V,T,Q,A,B,D,F	E, N	WIL
G311P813#3K800%&	3,480.0	0.3	A, B, C	V,T,Q,A,B,D,F	E, N	WIL
G311P813#3K200%&	3,520.0	0.3	A, B, C	V,T,Q,A,B,D,F	E, N	WIL
G311P813#3K700%&	3,570.0	0.3	A, B, C	V,T,Q,A,B,D,F	E, N	WIL
G311P813#3K100%&	3,610.0	0.3	A, B, C	V,T,Q,A,B,D,F	E, N	WIL
G311P813#3K500%&	3,650.0	0.3	A, B, C	V,T,Q,A,B,D,F	E, N	WIL
G311P813#3K000%&	3,700.0	0.3	A, B, C	V,T,Q,A,B,D,F	E, N	WIL
G311P813#3K400%&	3,740.0	0.3	A, B, C	V,T,Q,A,B,D,F	E, N	WIL
G311P813#3K900%&	3,790.0	0.3	A, B, C	V,T,Q,A,B,D,F	E, N	WIL
G311P813#3K300%&	3,830.0	0.3	A, B, C	V,T,Q,A,B,D,F	E, N	WIL
G311P813#3K800%&	3,880.0	0.3	A, B, C	V,T,Q,A,B,D,F	E, N	WIL
G311P813#3K200%&	3,920.0	0.3	A, B, C	V,T,Q,A,B,D,F	E, N	WIL
G311P813#3K700%&	3,970.0	0.3	A, B, C	V,T,Q,A,B,D,F	E, N	WIL
G311P813#4K200%&	4,020.0	0.3	A, B, C	V,T,Q,A,B,D,F	E, N	WIL
G311P813#4K700%&	4,070.0	0.3	A, B, C	V,T,Q,A,B,D,F	E, N	WIL
G311P813#4K200%&	4,120.0	0.3	A, B, C	V,T,Q,A,B,D,F	E, N	WIL
G311P813#4K700%&	4,170.0	0.3	A, B, C	V,T,Q,A,B,D,F	E, N	WIL
G311P813#4K200%&	4,220.0	0.3	A, B, C	V,T,Q,A,B,D,F	E, N	WIL
G311P813#4K700%&	4,270.0	0.3	A, B, C	V,T,Q,A,B,D,F	E, N	WIL
G311P813#4K200%&	4,320.0	0.3	A, B, C	V,T,Q,A,B,D,F	E, N	WIL
G311P813#4K700%&	4,370.0	0.3	A, B, C	V,T,Q,A,B,D,F	E, N	WIL
G311P813#4K200%&	4,420.0	0.3	A, B, C	V,T,Q,A,B,D,F	E, N	WIL
G311P813#4K800%&	4,480.0	0.3	A, B, C	V,T,Q,A,B,D,F	E, N	WIL
G311P813#4K300%&	4,530.0	0.3	A, B, C	V,T,Q,A,B,D,F	E, N	WIL
G311P813#4K900%&	4,590.0	0.3	A, B, C	V,T,Q,A,B,D,F	E, N	WIL
G311P813#4K400%&	4,640.0	0.3	A, B, C	V,T,Q,A,B,D,F	E, N	WIL
G311P813#4K000%&	4,700.0	0.3	A, B, C	V,T,Q,A,B,D,F	E, N	WIL
G311P813#4K500%&	4,750.0	0.3	A, B, C	V,T,Q,A,B,D,F	E, N	WIL
G311P813#4K100%&	4,810.0	0.3	A, B, C	V,T,Q,A,B,D,F	E, N	WIL
G311P813#4K700%&	4,870.0	0.3	A, B, C	V,T,Q,A,B,D,F	E, N	WIL
G311P813#4K300%&	4,930.0	0.3	A, B, C	V,T,Q,A,B,D,F	E, N	WIL
G311P813#4K900%&	4,990.0	0.3	A, B, C	V,T,Q,A,B,D,F	E, N	WIL
G311P813#5K500%&	5,050.0	0.3	A, B, C	V,T,Q,A,B,D,F	E, N	WIL
G311P813#5K100%&	5,110.0	0.3	A, B, C	V,T,Q,A,B,D,F	E, N	WIL
G311P813#5K700%&	5,170.0	0.3	A, B, C	V,T,Q,A,B,D,F	E, N	WIL
G311P813#5K300%&	5,230.0	0.3	A, B, C	V,T,Q,A,B,D,F	E, N	WIL
G311P813#5K000%&	5,300.0	0.3	A, B, C	V,T,Q,A,B,D,F	E, N	WIL
G311P813#5K600%&	5,360.0	0.3	A, B, C	V,T,Q,A,B,D,F	E, N	WIL
G311P813#5K200%&	5,420.0	0.3	A, B, C	V,T,Q,A,B,D,F	E, N	WIL

G311P813#5K900%&	5,490.0	0.3	A, B, C	V,T,Q,A,B,D,F	E, N	WIL
G311P813#5K600%&	5,560.0	0.3	A, B, C	V,T,Q,A,B,D,F	E, N	WIL
G311P813#5K200%&	5,620.0	0.3	A, B, C	V,T,Q,A,B,D,F	E, N	WIL
G311P813#5K900%&	5,690.0	0.3	A, B, C	V,T,Q,A,B,D,F	E, N	WIL
G311P813#5K600%&	5,760.0	0.3	A, B, C	V,T,Q,A,B,D,F	E, N	WIL
G311P813#5K300%&	5,830.0	0.3	A, B, C	V,T,Q,A,B,D,F	E, N	WIL
G311P813#5K000%&	5,900.0	0.3	A, B, C	V,T,Q,A,B,D,F	E, N	WIL
G311P813#5K700%&	5,970.0	0.3	A, B, C	V,T,Q,A,B,D,F	E, N	WIL
G311P813#6K400%&	6,040.0	0.3	A, B, C	V,T,Q,A,B,D,F	E, N	WIL
G311P813#6K200%&	6,120.0	0.3	A, B, C	V,T,Q,A,B,D,F	E, N	WIL
G311P813#6K900%&	6,190.0	0.3	A, B, C	V,T,Q,A,B,D,F	E, N	WIL
G311P813#6K600%&	6,260.0	0.3	A, B, C	V,T,Q,A,B,D,F	E, N	WIL
G311P813#6K400%&	6,340.0	0.3	A, B, C	V,T,Q,A,B,D,F	E, N	WIL
G311P813#6K200%&	6,420.0	0.3	A, B, C	V,T,Q,A,B,D,F	E, N	WIL
G311P813#6K900%&	6,490.0	0.3	A, B, C	V,T,Q,A,B,D,F	E, N	WIL
G311P813#6K700%&	6,570.0	0.3	A, B, C	V,T,Q,A,B,D,F	E, N	WIL
G311P813#6K500%&	6,650.0	0.3	A, B, C	V,T,Q,A,B,D,F	E, N	WIL
G311P813#6K300%&	6,730.0	0.3	A, B, C	V,T,Q,A,B,D,F	E, N	WIL
G311P813#6K100%&	6,810.0	0.3	A, B, C	V,T,Q,A,B,D,F	E, N	WIL
G311P813#6K000%&	6,900.0	0.3	A, B, C	V,T,Q,A,B,D,F	E, N	WIL
G311P813#6K800%&	6,980.0	0.3	A, B, C	V,T,Q,A,B,D,F	E, N	WIL
G311P813#7K600%&	7,060.0	0.3	A, B, C	V,T,Q,A,B,D,F	E, N	WIL
G311P813#7K500%&	7,150.0	0.3	A, B, C	V,T,Q,A,B,D,F	E, N	WIL
G311P813#7K300%&	7,230.0	0.3	A, B, C	V,T,Q,A,B,D,F	E, N	WIL
G311P813#7K200%&	7,320.0	0.3	A, B, C	V,T,Q,A,B,D,F	E, N	WIL
G311P813#7K100%&	7,410.0	0.3	A, B, C	V,T,Q,A,B,D,F	E, N	WIL
G311P813#7K000%&	7,500.0	0.3	A, B, C	V,T,Q,A,B,D,F	E, N	WIL
G311P813#7K900%&	7,590.0	0.3	A, B, C	V,T,Q,A,B,D,F	E, N	WIL
G311P813#7K800%&	7,680.0	0.3	A, B, C	V,T,Q,A,B,D,F	E, N	WIL
G311P813#7K700%&	7,770.0	0.3	A, B, C	V,T,Q,A,B,D,F	E, N	WIL
G311P813#7K700%&	7,870.0	0.3	A, B, C	V,T,Q,A,B,D,F	E, N	WIL
G311P813#7K600%&	7,960.0	0.3	A, B, C	V,T,Q,A,B,D,F	E, N	WIL
G311P813#8K600%&	8,060.0	0.3	A, B, C	V,T,Q,A,B,D,F	E, N	WIL
G311P813#8K600%&	8,160.0	0.3	A, B, C	V,T,Q,A,B,D,F	E, N	WIL
G311P813#8K500%&	8,250.0	0.3	A, B, C	V,T,Q,A,B,D,F	E, N	WIL
G311P813#8K500%&	8,350.0	0.3	A, B, C	V,T,Q,A,B,D,F	E, N	WIL
G311P813#8K500%&	8,450.0	0.3	A, B, C	V,T,Q,A,B,D,F	E, N	WIL
G311P813#8K600%&	8,560.0	0.3	A, B, C	V,T,Q,A,B,D,F	E, N	WIL
G311P813#8K600%&	8,660.0	0.3	A, B, C	V,T,Q,A,B,D,F	E, N	WIL
G311P813#8K600%&	8,760.0	0.3	A, B, C	V,T,Q,A,B,D,F	E, N	WIL
G311P813#8K700%&	8,870.0	0.3	A, B, C	V,T,Q,A,B,D,F	E, N	WIL
G311P813#8K800%&	8,980.0	0.3	A, B, C	V,T,Q,A,B,D,F	E, N	WIL
G311P813#9K900%&	9,090.0	0.3	A, B, C	V,T,Q,A,B,D,F	E, N	WIL
G311P813#9K000%&	9,200.0	0.3	A, B, C	V,T,Q,A,B,D,F	E, N	WIL
G311P813#9K100%&	9,310.0	0.3	A, B, C	V,T,Q,A,B,D,F	E, N	WIL
G311P813#9K200%&	9,420.0	0.3	A, B, C	V,T,Q,A,B,D,F	E, N	WIL
G311P813#9K300%&	9,530.0	0.3	A, B, C	V,T,Q,A,B,D,F	E, N	WIL

G311P813#9K500%&	9,650.0	0.3	A, B, C	V,T,Q,A,B,D,F	E, N	WIL
G311P813#9K600%&	9,760.0	0.3	A, B, C	V,T,Q,A,B,D,F	E, N	WIL
G311P813#9K800%&	9,880.0	0.3	A, B, C	V,T,Q,A,B,D,F	E, N	WIL
G311P813#10K000%&	10,000	0.3	A, B, C	V,T,Q,A,B,D,F	E, N	WIL
G311P813#10K100%&	10,100	0.3	A, B, C	V,T,Q,A,B,D,F	E, N	WIL
G311P813#10K200%&	10,200	0.3	A, B, C	V,T,Q,A,B,D,F	E, N	WIL
G311P813#10K400%&	10,400	0.3	A, B, C	V,T,Q,A,B,D,F	E, N	WIL
G311P813#10K500%&	10,500	0.3	A, B, C	V,T,Q,A,B,D,F	E, N	WIL
G311P813#10K600%&	10,600	0.3	A, B, C	V,T,Q,A,B,D,F	E, N	WIL
G311P813#10K700%&	10,700	0.3	A, B, C	V,T,Q,A,B,D,F	E, N	WIL
G311P813#10K900%&	10,900	0.3	A, B, C	V,T,Q,A,B,D,F	E, N	WIL
G311P813#11K000%&	11,000	0.3	A, B, C	V,T,Q,A,B,D,F	E, N	WIL
G311P813#11K100%&	11,100	0.3	A, B, C	V,T,Q,A,B,D,F	E, N	WIL
G311P813#11K300%&	11,300	0.3	A, B, C	V,T,Q,A,B,D,F	E, N	WIL
G311P813#11K400%&	11,400	0.3	A, B, C	V,T,Q,A,B,D,F	E, N	WIL
G311P813#11K500%&	11,500	0.3	A, B, C	V,T,Q,A,B,D,F	E, N	WIL
G311P813#11K700%&	11,700	0.3	A, B, C	V,T,Q,A,B,D,F	E, N	WIL
G311P813#11K800%&	11,800	0.3	A, B, C	V,T,Q,A,B,D,F	E, N	WIL
G311P813#12K000%&	12,000	0.3	A, B, C	V,T,Q,A,B,D,F	E, N	WIL
G311P813#12K100%&	12,100	0.3	A, B, C	V,T,Q,A,B,D,F	E, N	WIL
G311P813#12K300%&	12,300	0.3	A, B, C	V,T,Q,A,B,D,F	E, N	WIL
G311P813#12K400%&	12,400	0.3	A, B, C	V,T,Q,A,B,D,F	E, N	WIL
G311P813#12K600%&	12,600	0.3	A, B, C	V,T,Q,A,B,D,F	E, N	WIL
G311P813#12K700%&	12,700	0.3	A, B, C	V,T,Q,A,B,D,F	E, N	WIL
G311P813#12K900%&	12,900	0.3	A, B, C	V,T,Q,A,B,D,F	E, N	WIL
G311P813#13K000%&	13,000	0.3	A, B, C	V,T,Q,A,B,D,F	E, N	WIL
G311P813#13K200%&	13,200	0.3	A, B, C	V,T,Q,A,B,D,F	E, N	WIL
G311P813#13K300%&	13,300	0.3	A, B, C	V,T,Q,A,B,D,F	E, N	WIL
G311P813#13K500%&	13,500	0.3	A, B, C	V,T,Q,A,B,D,F	E, N	WIL
G311P813#13K700%&	13,700	0.3	A, B, C	V,T,Q,A,B,D,F	E, N	WIL
G311P813#13K800%&	13,800	0.3	A, B, C	V,T,Q,A,B,D,F	E, N	WIL
G311P813#14K000%&	14,000	0.3	A, B, C	V,T,Q,A,B,D,F	E, N	WIL
G311P813#14K200%&	14,200	0.3	A, B, C	V,T,Q,A,B,D,F	E, N	WIL
G311P813#14K300%&	14,300	0.3	A, B, C	V,T,Q,A,B,D,F	E, N	WIL
G311P813#14K500%&	14,500	0.3	A, B, C	V,T,Q,A,B,D,F	E, N	WIL
G311P813#14K700%&	14,700	0.3	A, B, C	V,T,Q,A,B,D,F	E, N	WIL
G311P813#14K900%&	14,900	0.3	A, B, C	V,T,Q,A,B,D,F	E, N	WIL
G311P813#15K000%&	15,000	0.3	A, B, C	V,T,Q,A,B,D,F	E, N	WIL
G311P813#15K200%&	15,200	0.3	A, B, C	V,T,Q,A,B,D,F	E, N	WIL
G311P813#15K400%&	15,400	0.3	A, B, C	V,T,Q,A,B,D,F	E, N	WIL
G311P813#15K600%&	15,600	0.3	A, B, C	V,T,Q,A,B,D,F	E, N	WIL
G311P813#15K800%&	15,800	0.3	A, B, C	V,T,Q,A,B,D,F	E, N	WIL
G311P813#16K000%&	16,000	0.3	A, B, C	V,T,Q,A,B,D,F	E, N	WIL
G311P813#16K200%&	16,200	0.3	A, B, C	V,T,Q,A,B,D,F	E, N	WIL
G311P813#16K400%&	16,400	0.3	A, B, C	V,T,Q,A,B,D,F	E, N	WIL
G311P813#16K500%&	16,500	0.3	A, B, C	V,T,Q,A,B,D,F	E, N	WIL
G311P813#16K700%&	16,700	0.3	A, B, C	V,T,Q,A,B,D,F	E, N	WIL

G311P813#16K900%&	16,900	0.3	A, B, C	V,T,Q,A,B,D,F	E, N	WIL
G311P813#17K200%&	17,200	0.3	A, B, C	V,T,Q,A,B,D,F	E, N	WIL
G311P813#17K400%&	17,400	0.3	A, B, C	V,T,Q,A,B,D,F	E, N	WIL
G311P813#17K600%&	17,600	0.3	A, B, C	V,T,Q,A,B,D,F	E, N	WIL
G311P813#17K800%&	17,800	0.3	A, B, C	V,T,Q,A,B,D,F	E, N	WIL
G311P813#18K000%&	18,000	0.3	A, B, C	V,T,Q,A,B,D,F	E, N	WIL
G311P813#18K200%&	18,200	0.3	A, B, C	V,T,Q,A,B,D,F	E, N	WIL
G311P813#18K400%&	18,400	0.3	A, B, C	V,T,Q,A,B,D,F	E, N	WIL
G311P813#18K700%&	18,700	0.3	A, B, C	V,T,Q,A,B,D,F	E, N	WIL
G311P813#18K900%&	18,900	0.3	A, B, C	V,T,Q,A,B,D,F	E, N	WIL
G311P813#19K100%&	19,100	0.3	A, B, C	V,T,Q,A,B,D,F	E, N	WIL
G311P813#19K300%&	19,300	0.3	A, B, C	V,T,Q,A,B,D,F	E, N	WIL
G311P813#19K600%&	19,600	0.3	A, B, C	V,T,Q,A,B,D,F	E, N	WIL
G311P813#19K800%&	19,800	0.3	A, B, C	V,T,Q,A,B,D,F	E, N	WIL
G311P813#20K000%&	20,000	0.3	A, B, C	V,T,Q,A,B,D,F	E, N	WIL
G311P813#20K300%&	20,300	0.3	A, B, C	V,T,Q,A,B,D,F	E, N	WIL
G311P813#20K500%&	20,500	0.3	A, B, C	V,T,Q,A,B,D,F	E, N	WIL
G311P813#20K800%&	20,800	0.3	A, B, C	V,T,Q,A,B,D,F	E, N	WIL
G311P813#21K000%&	21,000	0.3	A, B, C	V,T,Q,A,B,D,F	E, N	WIL
G311P813#21K300%&	21,300	0.3	A, B, C	V,T,Q,A,B,D,F	E, N	WIL
G311P813#21K500%&	21,500	0.3	A, B, C	V,T,Q,A,B,D,F	E, N	WIL
G311P813#21K800%&	21,800	0.3	A, B, C	V,T,Q,A,B,D,F	E, N	WIL
G311P813#22K100%&	22,100	0.3	A, B, C	V,T,Q,A,B,D,F	E, N	WIL
G311P813#22K300%&	22,300	0.3	A, B, C	V,T,Q,A,B,D,F	E, N	WIL
G311P813#22K600%&	22,600	0.3	A, B, C	V,T,Q,A,B,D,F	E, N	WIL
G311P813#22K900%&	22,900	0.3	A, B, C	V,T,Q,A,B,D,F	E, N	WIL
G311P813#23K200%&	23,200	0.3	A, B, C	V,T,Q,A,B,D,F	E, N	WIL
G311P813#23K400%&	23,400	0.3	A, B, C	V,T,Q,A,B,D,F	E, N	WIL
G311P813#23K700%&	23,700	0.3	A, B, C	V,T,Q,A,B,D,F	E, N	WIL
G311P813#24K000%&	24,000	0.3	A, B, C	V,T,Q,A,B,D,F	E, N	WIL
G311P813#24K300%&	24,300	0.3	A, B, C	V,T,Q,A,B,D,F	E, N	WIL
G311P813#24K600%&	24,600	0.3	A, B, C	V,T,Q,A,B,D,F	E, N	WIL
G311P813#24K900%&	24,900	0.3	A, B, C	V,T,Q,A,B,D,F	E, N	WIL
G311P813#25K200%&	25,200	0.3	A, B, C	V,T,Q,A,B,D,F	E, N	WIL
G311P813#25K500%&	25,500	0.3	A, B, C	V,T,Q,A,B,D,F	E, N	WIL
G311P813#25K800%&	25,800	0.3	A, B, C	V,T,Q,A,B,D,F	E, N	WIL
G311P813#26K100%&	26,100	0.3	A, B, C	V,T,Q,A,B,D,F	E, N	WIL
G311P813#26K400%&	26,400	0.3	A, B, C	V,T,Q,A,B,D,F	E, N	WIL
G311P813#26K700%&	26,700	0.3	A, B, C	V,T,Q,A,B,D,F	E, N	WIL
G311P813#27K100%&	27,100	0.3	A, B, C	V,T,Q,A,B,D,F	E, N	WIL
G311P813#27K400%&	27,400	0.3	A, B, C	V,T,Q,A,B,D,F	E, N	WIL
G311P813#27K700%&	27,700	0.3	A, B, C	V,T,Q,A,B,D,F	E, N	WIL
G311P813#28K000%&	28,000	0.3	A, B, C	V,T,Q,A,B,D,F	E, N	WIL
G311P813#28K400%&	28,400	0.3	A, B, C	V,T,Q,A,B,D,F	E, N	WIL
G311P813#28K700%&	28,700	0.3	A, B, C	V,T,Q,A,B,D,F	E, N	WIL
G311P813#29K100%&	29,100	0.3	A, B, C	V,T,Q,A,B,D,F	E, N	WIL
G311P813#29K400%&	29,400	0.3	A, B, C	V,T,Q,A,B,D,F	E, N	WIL

G311P813#29K800%&	29,800	0.3	A, B, C	V,T,Q,A,B,D,F	E, N	WIL
G311P813#30K100%&	30,100	0.3	A, B, C	V,T,Q,A,B,D,F	E, N	WIL
G311P813#30K500%&	30,500	0.3	A, B, C	V,T,Q,A,B,D,F	E, N	WIL
G311P813#30K900%&	30,900	0.3	A, B, C	V,T,Q,A,B,D,F	E, N	WIL
G311P813#31K200%&	31,200	0.3	A, B, C	V,T,Q,A,B,D,F	E, N	WIL
G311P813#31K600%&	31,600	0.3	A, B, C	V,T,Q,A,B,D,F	E, N	WIL
G311P813#32K000%&	32,000	0.3	A, B, C	V,T,Q,A,B,D,F	E, N	WIL
G311P813#32K400%&	32,400	0.3	A, B, C	V,T,Q,A,B,D,F	E, N	WIL
G311P813#32K800%&	32,800	0.3	A, B, C	V,T,Q,A,B,D,F	E, N	WIL
G311P813#33K200%&	33,200	0.3	A, B, C	V,T,Q,A,B,D,F	E, N	WIL
G311P813#33K600%&	33,600	0.3	A, B, C	V,T,Q,A,B,D,F	E, N	WIL
G311P813#34K000%&	34,000	0.3	A, B, C	V,T,Q,A,B,D,F	E, N	WIL
G311P813#34K400%&	34,400	0.3	A, B, C	V,T,Q,A,B,D,F	E, N	WIL
G311P813#34K800%&	34,800	0.3	A, B, C	V,T,Q,A,B,D,F	E, N	WIL
G311P813#35K200%&	35,200	0.3	A, B, C	V,T,Q,A,B,D,F	E, N	WIL
G311P813#35K700%&	35,700	0.3	A, B, C	V,T,Q,A,B,D,F	E, N	WIL
G311P813#36K100%&	36,100	0.3	A, B, C	V,T,Q,A,B,D,F	E, N	WIL
G311P813#36K500%&	36,500	0.3	A, B, C	V,T,Q,A,B,D,F	E, N	WIL
G311P813#37K000%&	37,000	0.3	A, B, C	V,T,Q,A,B,D,F	E, N	WIL
G311P813#37K400%&	37,400	0.3	A, B, C	V,T,Q,A,B,D,F	E, N	WIL
G311P813#37K900%&	37,900	0.3	A, B, C	V,T,Q,A,B,D,F	E, N	WIL
G311P813#38K300%&	38,300	0.3	A, B, C	V,T,Q,A,B,D,F	E, N	WIL
G311P813#38K800%&	38,800	0.3	A, B, C	V,T,Q,A,B,D,F	E, N	WIL
G311P813#39K200%&	39,200	0.3	A, B, C	V,T,Q,A,B,D,F	E, N	WIL
G311P813#39K700%&	39,700	0.3	A, B, C	V,T,Q,A,B,D,F	E, N	WIL
G311P813#40K200%&	40,200	0.3	A, B, C	V,T,Q,A,B,D,F	E, N	WIL
G311P813#40K700%&	40,700	0.3	A, B, C	V,T,Q,A,B,D,F	E, N	WIL
G311P813#41K200%&	41,200	0.3	A, B, C	V,T,Q,A,B,D,F	E, N	WIL
G311P813#41K700%&	41,700	0.3	A, B, C	V,T,Q,A,B,D,F	E, N	WIL
G311P813#42K200%&	42,200	0.3	A, B, C	V,T,Q,A,B,D,F	E, N	WIL
G311P813#42K700%&	42,700	0.3	A, B, C	V,T,Q,A,B,D,F	E, N	WIL
G311P813#43K200%&	43,200	0.3	A, B, C	V,T,Q,A,B,D,F	E, N	WIL
G311P813#43K700%&	43,700	0.3	A, B, C	V,T,Q,A,B,D,F	E, N	WIL
G311P813#44K200%&	44,200	0.3	A, B, C	V,T,Q,A,B,D,F	E, N	WIL
G311P813#44K800%&	44,800	0.3	A, B, C	V,T,Q,A,B,D,F	E, N	WIL
G311P813#45K300%&	45,300	0.3	A, B, C	V,T,Q,A,B,D,F	E, N	WIL
G311P813#45K900%&	45,900	0.3	A, B, C	V,T,Q,A,B,D,F	E, N	WIL
G311P813#46K400%&	46,400	0.3	A, B, C	V,T,Q,A,B,D,F	E, N	WIL
G311P813#47K000%&	47,000	0.3	A, B, C	V,T,Q,A,B,D,F	E, N	WIL
G311P813#47K500%&	47,500	0.3	A, B, C	V,T,Q,A,B,D,F	E, N	WIL
G311P813#48K100%&	48,100	0.3	A, B, C	V,T,Q,A,B,D,F	E, N	WIL
G311P813#48K700%&	48,700	0.3	A, B, C	V,T,Q,A,B,D,F	E, N	WIL
G311P813#49K300%&	49,300	0.3	A, B, C	V,T,Q,A,B,D,F	E, N	WIL
G311P813#49K900%&	49,900	0.3	A, B, C	V,T,Q,A,B,D,F	E, N	WIL
G311P813#50K500%&	50,500	0.3	A, B, C	V,T,Q,A,B,D,F	E, N	WIL
G311P813#51K100%&	51,100	0.3	A, B, C	V,T,Q,A,B,D,F	E, N	WIL
G311P813#51K700%&	51,700	0.3	A, B, C	V,T,Q,A,B,D,F	E, N	WIL

G311P813#52K300%&	52,300	0.3	A, B, C	V,T,Q,A,B,D,F	E, N	WIL
G311P813#53K000%&	53,000	0.3	A, B, C	V,T,Q,A,B,D,F	E, N	WIL
G311P813#53K600%&	53,600	0.3	A, B, C	V,T,Q,A,B,D,F	E, N	WIL
G311P813#54K200%&	54,200	0.3	A, B, C	V,T,Q,A,B,D,F	E, N	WIL
G311P813#54K900%&	54,900	0.3	A, B, C	V,T,Q,A,B,D,F	E, N	WIL
G311P813#55K600%&	55,600	0.3	A, B, C	V,T,Q,A,B,D,F	E, N	WIL
G311P813#56K200%&	56,200	0.3	A, B, C	V,T,Q,A,B,D,F	E, N	WIL
G311P813#56K900%&	56,900	0.3	A, B, C	V,T,Q,A,B,D,F	E, N	WIL
G311P813#57K600%&	57,600	0.3	A, B, C	V,T,Q,A,B,D,F	E, N	WIL
G311P813#58K300%&	58,300	0.3	A, B, C	V,T,Q,A,B,D,F	E, N	WIL
G311P813#59K000%&	59,000	0.3	A, B, C	V,T,Q,A,B,D,F	E, N	WIL
G311P813#59K700%&	59,700	0.3	A, B, C	V,T,Q,A,B,D,F	E, N	WIL
G311P813#60K400%&	60,400	0.3	A, B, C	V,T,Q,A,B,D,F	E, N	WIL
G311P813#61K200%&	61,200	0.3	A, B, C	V,T,Q,A,B,D,F	E, N	WIL
G311P813#61K900%&	61,900	0.3	A, B, C	V,T,Q,A,B,D,F	E, N	WIL
G311P813#62K600%&	62,600	0.3	A, B, C	V,T,Q,A,B,D,F	E, N	WIL
G311P813#63K400%&	63,400	0.3	A, B, C	V,T,Q,A,B,D,F	E, N	WIL
G311P813#64K200%&	64,200	0.3	A, B, C	V,T,Q,A,B,D,F	E, N	WIL
G311P813#64K900%&	64,900	0.3	A, B, C	V,T,Q,A,B,D,F	E, N	WIL
G311P813#65K700%&	65,700	0.3	A, B, C	V,T,Q,A,B,D,F	E, N	WIL
G311P813#66K500%&	66,500	0.3	A, B, C	V,T,Q,A,B,D,F	E, N	WIL
G311P813#67K300%&	67,300	0.3	A, B, C	V,T,Q,A,B,D,F	E, N	WIL
G311P813#68K100%&	68,100	0.3	A, B, C	V,T,Q,A,B,D,F	E, N	WIL
G311P813#69K000%&	69,000	0.3	A, B, C	V,T,Q,A,B,D,F	E, N	WIL
G311P813#69K800%&	69,800	0.3	A, B, C	V,T,Q,A,B,D,F	E, N	WIL
G311P813#70K600%&	70,600	0.3	A, B, C	V,T,Q,A,B,D,F	E, N	WIL
G311P813#71K500%&	71,500	0.3	A, B, C	V,T,Q,A,B,D,F	E, N	WIL
G311P813#72K300%&	72,300	0.3	A, B, C	V,T,Q,A,B,D,F	E, N	WIL
G311P813#73K200%&	73,200	0.3	A, B, C	V,T,Q,A,B,D,F	E, N	WIL
G311P813#74K100%&	74,100	0.3	A, B, C	V,T,Q,A,B,D,F	E, N	WIL
G311P813#75K000%&	75,000	0.3	A, B, C	V,T,Q,A,B,D,F	E, N	WIL
G311P813#75K900%&	75,900	0.3	A, B, C	V,T,Q,A,B,D,F	E, N	WIL
G311P813#76K800%&	76,800	0.3	A, B, C	V,T,Q,A,B,D,F	E, N	WIL
G311P813#77K700%&	77,700	0.3	A, B, C	V,T,Q,A,B,D,F	E, N	WIL
G311P813#78K700%&	78,700	0.3	A, B, C	V,T,Q,A,B,D,F	E, N	WIL
G311P813#79K600%&	79,600	0.3	A, B, C	V,T,Q,A,B,D,F	E, N	WIL
G311P813#80K600%&	80,600	0.3	A, B, C	V,T,Q,A,B,D,F	E, N	WIL
G311P813#81K600%&	81,600	0.3	A, B, C	V,T,Q,A,B,D,F	E, N	WIL
G311P813#82K500%&	82,500	0.3	A, B, C	V,T,Q,A,B,D,F	E, N	WIL
G311P813#83K500%&	83,500	0.3	A, B, C	V,T,Q,A,B,D,F	E, N	WIL
G311P813#84K500%&	84,500	0.3	A, B, C	V,T,Q,A,B,D,F	E, N	WIL
G311P813#85K600%&	85,600	0.3	A, B, C	V,T,Q,A,B,D,F	E, N	WIL
G311P813#86K600%&	86,600	0.3	A, B, C	V,T,Q,A,B,D,F	E, N	WIL
G311P813#87K600%&	87,600	0.3	A, B, C	V,T,Q,A,B,D,F	E, N	WIL
G311P813#88K700%&	88,700	0.3	A, B, C	V,T,Q,A,B,D,F	E, N	WIL
G311P813#89K800%&	89,800	0.3	A, B, C	V,T,Q,A,B,D,F	E, N	WIL
G311P813#90K900%&	90,900	0.3	A, B, C	V,T,Q,A,B,D,F	E, N	WIL

G311P813#92K000%&	92,000	0.3	A, B, C	V,T,Q,A,B,D,F	E, N	WIL
G311P813#93K100%&	93,100	0.3	A, B, C	V,T,Q,A,B,D,F	E, N	WIL
G311P813#94K200%&	94,200	0.3	A, B, C	V,T,Q,A,B,D,F	E, N	WIL
G311P813#95K300%&	95,300	0.3	A, B, C	V,T,Q,A,B,D,F	E, N	WIL
G311P813#96K500%&	96,500	0.3	A, B, C	V,T,Q,A,B,D,F	E, N	WIL
G311P813#97K600%&	97,600	0.3	A, B, C	V,T,Q,A,B,D,F	E, N	WIL
G311P813#98K800%&	98,800	0.3	A, B, C	V,T,Q,A,B,D,F	E, N	WIL
G311P813#100K00%&	100,000	0.3	A, B, C	V,T,Q,A,B,D,F	E, N	WIL

APPLICATION NOTES S-311-P-813

1) GSFC's S-311-P-813 specification was developed to enable procurement of Space Level precision resistors. Special qualification and screening provisions have been included in this specification for space application considerations. Included in this processing are a special power conditioning test and the option to require conformance to Current Noise, Voltage Coefficient and Thermal EMF test limits.

2) This part is similar in form, fit and function to the RNC90Y resistors from MIL-PRF-55182/9 and the MIL-R-122/1 resistors. It is anticipated that the only qualified source for MIL-R-122/1 will drop their qualification in favor of providing parts to DSCC drawing versions of this device. The DSCC drawings will not be Established Reliability specifications requiring routine failure rate maintenance testing.

3) Parts procured in accordance with GSFC S-311-P-813 are acceptable for

Level 1 or Level 2

applications.

4) Parts of any resistance value may be ordered within the ranges listed in the selection list tables. However, it is preferred that resistance values be selected from the standard decade values shown in the listings herein.

5) These S-311-P-813 resistors should ONLY be used in applications where their particular characteristics of

Tight temperature coefficient

Minimal resistance drift over time

Precision

High power rating for package density

are ABSOLUTELY necessary. There are possible reliability concerns with these resistors resulting from the difficulty making robust connections to the thin nichrome foil used in their construction.

6) S-311-P-813 does NOT include resistors above 100 kohms. The thin foils required for values above 100 kohms and the complexity of the grid line pattern in the resistive foil make resistors with these high values difficult to produce with a reliability satisfactory for space flight applications.

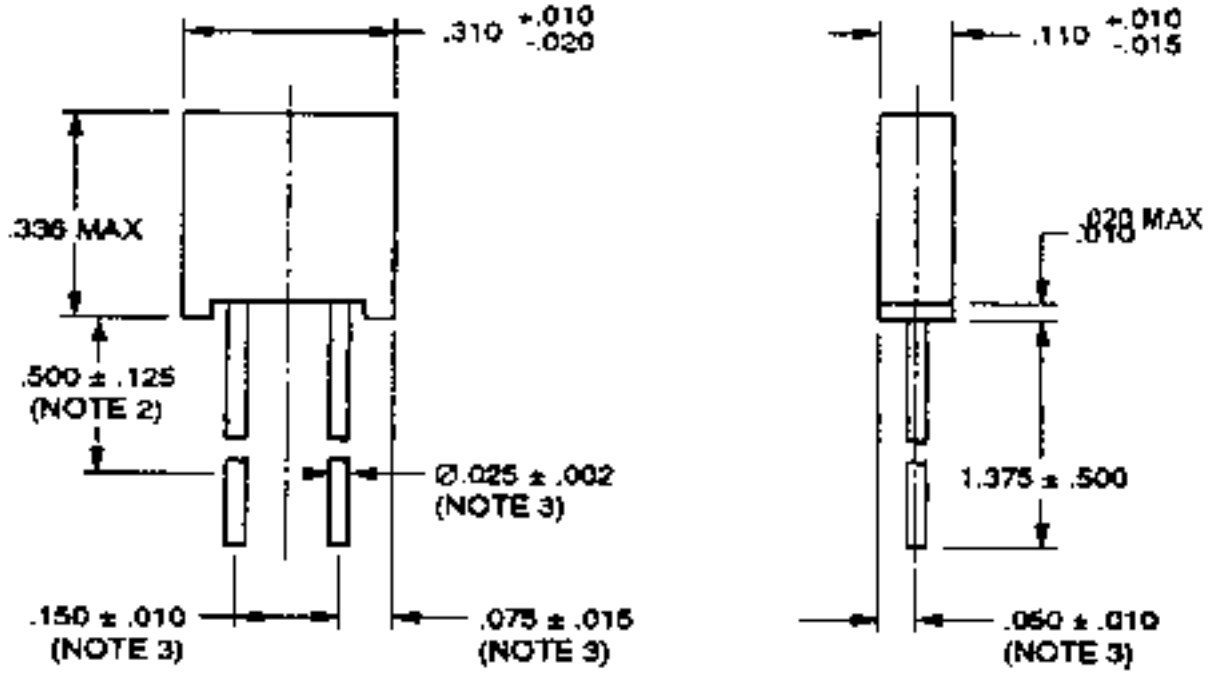

Note 1. Dimensions are in inches.

Note 2. Resistance measurements point.

Note 3. The lead measurement is made from the point of emergence from the body.

Note 4. Style of standoffs is optional.

Part Number Ordering Information, example and explanation:

G311P813A100K00AE where,

G311P813	A	100K00	A	E
Goddard Designator	Temperature Characteristic	Resistance Value (Ohms)	Tolerance	Performance Processing

G311P813 Resistor Characteristics

Power Rating @ 125deg.C	Maximum Working Voltage	Operating Temperature Range	Temperature Characteristic of Resistance	Minimum Resistance	Maximum Resistance	Tolerance
			D	1 ohm	2.99 ohms	D, F
			C	3 ohms	4.99 ohms	D, F
		-55deg.C	C	5 ohms	9.99 ohms	B, D, F
0.3 W	300 Vdc	to	B, C	10 ohms	29.99 ohms	B, D, F
		+125deg.C	B, C	30 ohms	99.99 ohms	V, T, Q, A, B, D, F
			A, B, C	100 ohms	100 kohms	V, T, Q, A, B, D, F

Part number ordering options are developed using the following criteria:

Temperature Characteristic	Operating Temperature Range	Resistance Temperature Characteristic (Referenced to +25deg.C)
A	-55deg.C to +125deg.C	+/-2.5 parts per million/deg.C
B	-55deg.C to +125deg.C	+/-5.0 parts per million/deg.C
C	-55deg.C to +125deg.C	+/-10.0 parts per million/deg.C
D	-55deg.C to +125deg.C	+/-20.0 parts per million/deg.C

Resistance Tolerance		Performance Processing Option
V = +/- 0.005%		E = Current Noise, Voltage Coefficient and Thermal EMF
T = +/- 0.01%		N = No Special Inspection
Q = +/- 0.02%		
A = +/- 0.05%		
B = +/- 0.1%		
D = +/- 0.5%		
F = +/- 1.0%		

Resistance Values:

Resistance values in ohms are identified by six characters consisting of five digits and a letter. The letter is used simultaneously as a decimal point and as a multiplier. For resistance values:

a. Greater than or equal to 1 ohm but less than 1,000 ohms, the letter "R" is used to represent a decimal point.

b. Greater than or equal to 1,000 ohms but less than 1 megohm, the letter "K" is used to represent a decimal point.

Also, it is possible to order resistors with any resistance value within the minimum and maximum values shown in the tables herein. However, it is preferred that values be chosen from the standard values shown in the tables.

Revision History for S-311-P-813 Listing in the NPSL

04/30/04	Changed Wilbrecht Listing to Reflect Recent Requalification for the 100 ohm thru 100 kohm range only for 5 ppm/deg.C through 20 ppm/deg.C. Removed Vishay as a Qualified Source based upon their decisio
05/03/00	Added Vishay as a qualified source for this device type. Corrected typos in the 1 kohm to 10 kohm decade parts listing which left a digit out of the proper part number
01/21/99	Added link to GSFC Qualification Reports page for S-311-P-813 parts To access the above link you must have an EPIMS UserID and Password (Click Here for Details)
01/13/98	Added application note explaining why parts above 100 kohms are not included in S-311-P-813
12/15/97	Initial Release of S-311-P-813 Section in the NPSL

Go to -

NEPP

|

NPSL

|

Resistors

S-311-P-813, RESISTORS

Fixed, Resistor, Very Low, Resistance Temperature Characteristic, Precision, Radial-Lead

Resistance Ranges

Part Number/Ordering Explanation

Important! Application Notes

Click Here to Download S-311-P-813

Click Here for Outline Drawing of this Resistor

Revision History for S-311-P-813 Listing in the NPSL

Last Revision: 04/30/04

S-311-P-813 Precision Resistors: 1.0000 Ohms through 9.8800 Ohms

	Resistance	Power	Temperature	Resistance	Performance	
Part Number	Value (Ohms)	Rating (W)	Characteristic (#)	Tolerance (%)	Processing (&)	Manufacturer
G311P813#1R0000%&	1.0000	0.3	C	D, F	E, N	No Source
G311P813#1R0100%&	1.0100	0.3	C	D, F	E, N	No Source
G311P813#1R0200%&	1.0200	0.3	C	D, F	E, N	No Source
G311P813#1R0400%&	1.0400	0.3	C	D, F	E, N	No Source
G311P813#1R0500%&	1.0500	0.3	C	D, F	E, N	No Source
G311P813#1R0600%&	1.0600	0.3	C	D, F	E, N	No Source
G311P813#1R0700%&	1.0700	0.3	C	D, F	E, N	No Source
G311P813#1R0900%&	1.0900	0.3	C	D, F	E, N	No Source
G311P813#1R1000%&	1.1000	0.3	C	D, F	E, N	No Source
G311P813#1R1100%&	1.1100	0.3	C	D, F	E, N	No Source
G311P813#1R1300%&	1.1300	0.3	C	D, F	E, N	No Source
G311P813#1R1400%&	1.1400	0.3	C	D, F	E, N	No Source
G311P813#1R1500%&	1.1500	0.3	C	D, F	E, N	No Source
G311P813#1R1700%&	1.1700	0.3	C	D, F	E, N	No Source
	Resistance	Power	Temperature	Resistance	Performance	
Part Number	Value (Ohms)	Rating (W)	Characteristic (#)	Tolerance (%)	Processing (&)	Manufacturer
G311P813#1R1800%&	1.1800	0.3	C	D, F	E, N	No Source
G311P813#1R2000%&	1.2000	0.3	C	D, F	E, N	No Source
G311P813#1R2100%&	1.2100	0.3	C	D, F	E, N	No Source
G311P813#1R2300%&	1.2300	0.3	C	D, F	E, N	No Source
G311P813#1R2400%&	1.2400	0.3	C	D, F	E, N	No Source

G311P813#1R2600%&	1.2600	0.3	C	D, F	E, N	No Source
G311P813#1R2700%&	1.2700	0.3	C	D, F	E, N	No Source
G311P813#1R2900%&	1.2900	0.3	C	D, F	E, N	No Source
G311P813#1R3000%&	1.3000	0.3	C	D, F	E, N	No Source
G311P813#1R3200%&	1.3200	0.3	C	D, F	E, N	No Source
G311P813#1R3300%&	1.3300	0.3	C	D, F	E, N	No Source
G311P813#1R3500%&	1.3500	0.3	C	D, F	E, N	No Source
G311P813#1R3700%&	1.3700	0.3	C	D, F	E, N	No Source
G311P813#1R3800%&	1.3800	0.3	C	D, F	E, N	No Source
	Resistance	Power	Temperature	Resistance	Performance	
Part Number	Value (Ohms)	Rating (W)	Characteristic (#)	Tolerance (%)	Processing (&)	Manufacturer
G311P813#1R4000%&	1.4000	0.3	C	D, F	E, N	No Source
G311P813#1R4200%&	1.4200	0.3	C	D, F	E, N	No Source
G311P813#1R4300%&	1.4300	0.3	C	D, F	E, N	No Source
G311P813#1R4500%&	1.4500	0.3	C	D, F	E, N	No Source
G311P813#1R4700%&	1.4700	0.3	C	D, F	E, N	No Source
G311P813#1R4900%&	1.4900	0.3	C	D, F	E, N	No Source
G311P813#1R5000%&	1.5000	0.3	C	D, F	E, N	No Source
G311P813#1R5200%&	1.5200	0.3	C	D, F	E, N	No Source
G311P813#1R5400%&	1.5400	0.3	C	D, F	E, N	No Source
G311P813#1R5600%&	1.5600	0.3	C	D, F	E, N	No Source
G311P813#1R5800%&	1.5800	0.3	C	D, F	E, N	No Source
G311P813#1R6000%&	1.6000	0.3	C	D, F	E, N	No Source
G311P813#1R6200%&	1.6200	0.3	C	D, F	E, N	No Source
G311P813#1R6400%&	1.6400	0.3	C	D, F	E, N	No Source
	Resistance	Power	Temperature	Resistance	Performance	
Part Number	Value (Ohms)	Rating (W)	Characteristic (#)	Tolerance (%)	Processing (&)	Manufacturer
G311P813#1R6500%&	1.6500	0.3	C	D, F	E, N	No Source
G311P813#1R6700%&	1.6700	0.3	C	D, F	E, N	No Source
G311P813#1R6900%&	1.6900	0.3	C	D, F	E, N	No Source
G311P813#1R7200%&	1.7200	0.3	C	D, F	E, N	No Source
G311P813#1R7400%&	1.7400	0.3	C	D, F	E, N	No Source
G311P813#1R7600%&	1.7600	0.3	C	D, F	E, N	No Source
G311P813#1R7800%&	1.7800	0.3	C	D, F	E, N	No Source
G311P813#1R8000%&	1.8000	0.3	C	D, F	E, N	No Source
G311P813#1R8200%&	1.8200	0.3	C	D, F	E, N	No Source
G311P813#1R8400%&	1.8400	0.3	C	D, F	E, N	No Source
G311P813#1R8700%&	1.8700	0.3	C	D, F	E, N	No Source
G311P813#1R8900%&	1.8900	0.3	C	D, F	E, N	No Source
G311P813#1R9100%&	1.9100	0.3	C	D, F	E, N	No Source
G311P813#1R9300%&	1.9300	0.3	C	D, F	E, N	No Source
	Resistance	Power	Temperature	Resistance	Performance	
Part Number	Value (Ohms)	Rating (W)	Characteristic (#)	Tolerance (%)	Processing (&)	Manufacturer
G311P813#1R9600%&	1.9600	0.3	C	D, F	E, N	No Source
G311P813#1R9800%&	1.9800	0.3	C	D, F	E, N	No Source
G311P813#2R0000%&	2.0000	0.3	C	D, F	E, N	No Source
G311P813#2R0300%&	2.0300	0.3	C	D, F	E, N	No Source

G311P813#2R0500%&	2.0500	0.3	C	D, F	E, N	No Source
G311P813#2R0800%&	2.0800	0.3	C	D, F	E, N	No Source
G311P813#2R1000%&	2.1000	0.3	C	D, F	E, N	No Source
G311P813#2R1300%&	2.1300	0.3	C	D, F	E, N	No Source
G311P813#2R1500%&	2.1500	0.3	C	D, F	E, N	No Source
G311P813#2R1800%&	2.1800	0.3	C	D, F	E, N	No Source
G311P813#2R2100%&	2.2100	0.3	C	D, F	E, N	No Source
G311P813#2R2300%&	2.2300	0.3	C	D, F	E, N	No Source
G311P813#2R2600%&	2.2600	0.3	C	D, F	E, N	No Source
G311P813#2R2900%&	2.2900	0.3	C	D, F	E, N	No Source
	Resistance	Power	Temperature	Resistance	Performance	
Part Number	Value (Ohms)	Rating (W)	Characteristic (#)	Tolerance (%)	Processing (&)	Manufacturer
G311P813#2R3200%&	2.3200	0.3	C	D, F	E, N	No Source
G311P813#2R3400%&	2.3400	0.3	C	D, F	E, N	No Source
G311P813#2R3700%&	2.3700	0.3	C	D, F	E, N	No Source
G311P813#2R4000%&	2.4000	0.3	C	D, F	E, N	No Source
G311P813#2R4300%&	2.4300	0.3	C	D, F	E, N	No Source
G311P813#2R4600%&	2.4600	0.3	C	D, F	E, N	No Source
G311P813#2R4900%&	2.4900	0.3	C	D, F	E, N	No Source
G311P813#2R5200%&	2.5200	0.3	C	D, F	E, N	No Source
G311P813#2R5500%&	2.5500	0.3	C	D, F	E, N	No Source
G311P813#2R5800%&	2.5800	0.3	C	D, F	E, N	No Source
G311P813#2R6100%&	2.6100	0.3	C	D, F	E, N	No Source
G311P813#2R6400%&	2.6400	0.3	C	D, F	E, N	No Source
G311P813#2R6700%&	2.6700	0.3	C	D, F	E, N	No Source
G311P813#2R7100%&	2.7100	0.3	C	D, F	E, N	No Source
	Resistance	Power	Temperature	Resistance	Performance	
Part Number	Value (Ohms)	Rating (W)	Characteristic (#)	Tolerance (%)	Processing (&)	Manufacturer
G311P813#2R7400%&	2.7400	0.3	C	D, F	E, N	No Source
G311P813#2R7700%&	2.7700	0.3	C	D, F	E, N	No Source
G311P813#2R8000%&	2.8000	0.3	C	D, F	E, N	No Source
G311P813#2R8400%&	2.8400	0.3	C	D, F	E, N	No Source
G311P813#2R8700%&	2.8700	0.3	C	D, F	E, N	No Source
G311P813#2R9100%&	2.9100	0.3	C	D, F	E, N	No Source
G311P813#2R9400%&	2.9400	0.3	C	D, F	E, N	No Source
G311P813#2R9800%&	2.9800	0.3	C	D, F	E, N	No Source
G311P813#3R0100%&	3.0100	0.3	C	D, F	E, N	No Source
G311P813#3R0500%&	3.0500	0.3	C	D, F	E, N	No Source
G311P813#3R0900%&	3.0900	0.3	C	D, F	E, N	No Source
G311P813#3R1200%&	3.1200	0.3	C	D, F	E, N	No Source
G311P813#3R1600%&	3.1600	0.3	C	D, F	E, N	No Source
G311P813#3R2000%&	3.2000	0.3	C	D, F	E, N	No Source
	Resistance	Power	Temperature	Resistance	Performance	
Part Number	Value (Ohms)	Rating (W)	Characteristic (#)	Tolerance (%)	Processing (&)	Manufacturer
G311P813#3R2400%&	3.2400	0.3	C	D, F	E, N	No Source
G311P813#3R2800%&	3.2800	0.3	C	D, F	E, N	No Source
G311P813#3R3200%&	3.3200	0.3	C	D, F	E, N	No Source

G311P813#3R3600%&	3.3600	0.3	C	D, F	E, N	No Source
G311P813#3R4000%&	3.4000	0.3	C	D, F	E, N	No Source
G311P813#3R4400%&	3.4400	0.3	C	D, F	E, N	No Source
G311P813#3R4800%&	3.4800	0.3	C	D, F	E, N	No Source
G311P813#3R5200%&	3.5200	0.3	C	D, F	E, N	No Source
G311P813#3R5700%&	3.5700	0.3	C	D, F	E, N	No Source
G311P813#3R6100%&	3.6100	0.3	C	D, F	E, N	No Source
G311P813#3R6500%&	3.6500	0.3	C	D, F	E, N	No Source
G311P813#3R7000%&	3.7000	0.3	C	D, F	E, N	No Source
G311P813#3R7400%&	3.7400	0.3	C	D, F	E, N	No Source
G311P813#3R7900%&	3.7900	0.3	C	D, F	E, N	No Source
	Resistance	Power	Temperature	Resistance	Performance	
Part Number	Value (Ohms)	Rating (W)	Characteristic (#)	Tolerance (%)	Processing (&)	Manufacturer
G311P813#3R8300%&	3.8300	0.3	C	D, F	E, N	No Source
G311P813#3R8800%&	3.8800	0.3	C	D, F	E, N	No Source
G311P813#3R9200%&	3.9200	0.3	C	D, F	E, N	No Source
G311P813#3R9700%&	3.9700	0.3	C	D, F	E, N	No Source
G311P813#4R0200%&	4.0200	0.3	C	D, F	E, N	No Source
G311P813#4R0700%&	4.0700	0.3	C	D, F	E, N	No Source
G311P813#4R1200%&	4.1200	0.3	C	D, F	E, N	No Source
G311P813#4R1700%&	4.1700	0.3	C	D, F	E, N	No Source
G311P813#4R2200%&	4.2200	0.3	C	D, F	E, N	No Source
G311P813#4R2700%&	4.2700	0.3	C	D, F	E, N	No Source
G311P813#4R3200%&	4.3200	0.3	C	D, F	E, N	No Source
G311P813#4R3700%&	4.3700	0.3	C	D, F	E, N	No Source
G311P813#4R4200%&	4.4200	0.3	C	D, F	E, N	No Source
G311P813#4R4800%&	4.4800	0.3	C	D, F	E, N	No Source
	Resistance	Power	Temperature	Resistance	Performance	
Part Number	Value (Ohms)	Rating (W)	Characteristic (#)	Tolerance (%)	Processing (&)	Manufacturer
G311P813#4R5300%&	4.5300	0.3	C	D, F	E, N	No Source
G311P813#4R5900%&	4.5900	0.3	C	D, F	E, N	No Source
G311P813#4R6400%&	4.6400	0.3	C	D, F	E, N	No Source
G311P813#4R7000%&	4.7000	0.3	C	D, F	E, N	No Source
G311P813#4R7500%&	4.7500	0.3	C	D, F	E, N	No Source
G311P813#4R8100%&	4.8100	0.3	C	D, F	E, N	No Source
G311P813#4R8700%&	4.8700	0.3	C	D, F	E, N	No Source
G311P813#4R9300%&	4.9300	0.3	C	D, F	E, N	No Source
G311P813#4R9900%&	4.9900	0.3	C	D, F	E, N	No Source
G311P813#5R0500%&	5.0500	0.3	C	B, D, F	E, N	No Source
G311P813#5R1100%&	5.1100	0.3	C	B, D, F	E, N	No Source
G311P813#5R1700%&	5.1700	0.3	C	B, D, F	E, N	No Source
G311P813#5R2300%&	5.2300	0.3	C	B, D, F	E, N	No Source
G311P813#5R3000%&	5.3000	0.3	C	B, D, F	E, N	No Source
	Resistance	Power	Temperature	Resistance	Performance	
Part Number	Value (Ohms)	Rating (W)	Characteristic (#)	Tolerance (%)	Processing (&)	Manufacturer
G311P813#5R3600%&	5.3600	0.3	C	B, D, F	E, N	No Source
G311P813#5R4200%&	5.4200	0.3	C	B, D, F	E, N	No Source

G311P813#5R4900%&	5.4900	0.3	C	B, D, F	E, N	No Source
G311P813#5R5600%&	5.5600	0.3	C	B, D, F	E, N	No Source
G311P813#5R6200%&	5.6200	0.3	C	B, D, F	E, N	No Source
G311P813#5R6900%&	5.6900	0.3	C	B, D, F	E, N	No Source
G311P813#5R7600%&	5.7600	0.3	C	B, D, F	E, N	No Source
G311P813#5R8300%&	5.8300	0.3	C	B, D, F	E, N	No Source
G311P813#5R9000%&	5.9000	0.3	C	B, D, F	E, N	No Source
G311P813#5R9700%&	5.9700	0.3	C	B, D, F	E, N	No Source
G311P813#6R0400%&	6.0400	0.3	C	B, D, F	E, N	No Source
G311P813#6R1200%&	6.1200	0.3	C	B, D, F	E, N	No Source
G311P813#6R1900%&	6.1900	0.3	C	B, D, F	E, N	No Source
G311P813#6R2600%&	6.2600	0.3	C	B, D, F	E, N	No Source
	Resistance	Power	Temperature	Resistance	Performance	
Part Number	Value (Ohms)	Rating (W)	Characteristic (#)	Tolerance (%)	Processing (&)	Manufacturer
G311P813#6R3400%&	6.3400	0.3	C	B, D, F	E, N	No Source
G311P813#6R4200%&	6.4200	0.3	C	B, D, F	E, N	No Source
G311P813#6R4900%&	6.4900	0.3	C	B, D, F	E, N	No Source
G311P813#6R5700%&	6.5700	0.3	C	B, D, F	E, N	No Source
G311P813#6R6500%&	6.6500	0.3	C	B, D, F	E, N	No Source
G311P813#6R7300%&	6.7300	0.3	C	B, D, F	E, N	No Source
G311P813#6R8100%&	6.8100	0.3	C	B, D, F	E, N	No Source
G311P813#6R9000%&	6.9000	0.3	C	B, D, F	E, N	No Source
G311P813#6R9800%&	6.9800	0.3	C	B, D, F	E, N	No Source
G311P813#7R0600%&	7.0600	0.3	C	B, D, F	E, N	No Source
G311P813#7R1500%&	7.1500	0.3	C	B, D, F	E, N	No Source
G311P813#7R2300%&	7.2300	0.3		B, D, F	E, N	No Source
G311P813#7R3200%&	7.3200	0.3	C	B, D, F	E, N	No Source
G311P813#7R4100%&	7.4100	0.3	C	B, D, F	E, N	No Source
	Resistance	Power	Temperature	Resistance	Performance	
Part Number	Value (Ohms)	Rating (W)	Characteristic (#)	Tolerance (%)	Processing (&)	Manufacturer
G311P813#7R5000%&	7.5000	0.3	C	B, D, F	E, N	No Source
G311P813#7R5900%&	7.5900	0.3	C	B, D, F	E, N	No Source
G311P813#7R6800%&	7.6800	0.3	C	B, D, F	E, N	No Source
G311P813#7R7700%&	7.7700	0.3	C	B, D, F	E, N	No Source
G311P813#7R8700%&	7.8700	0.3	C	B, D, F	E, N	No Source
G311P813#7R9600%&	7.9600	0.3	C	B, D, F	E, N	No Source
G311P813#8R0600%&	8.0600	0.3	C	B, D, F	E, N	No Source
G311P813#8R1600%&	8.1600	0.3	C	B, D, F	E, N	No Source
G311P813#8R2500%&	8.2500	0.3	C	B, D, F	E, N	No Source
G311P813#8R3500%&	8.3500	0.3	C	B, D, F	E, N	No Source
G311P813#8R4500%&	8.4500	0.3	C	B, D, F	E, N	No Source
G311P813#8R5600%&	8.5600	0.3	C	B, D, F	E, N	No Source
G311P813#8R6600%&	8.6600	0.3	C	B, D, F	E, N	No Source
G311P813#8R7600%&	8.7600	0.3	C	B, D, F	E, N	No Source
	Resistance	Power	Temperature	Resistance	Performance	
Part Number	Value (Ohms)	Rating (W)	Characteristic (#)	Tolerance (%)	Processing (&)	Manufacturer
G311P813#8R8700%&	8.8700	0.3	C	B, D, F	E, N	No Source

G311P813#8R9800%&	8.9800	0.3	C	B, D, F	E, N	No Source
G311P813#9R0900%&	9.0900	0.3	C	B, D, F	E, N	No Source
G311P813#9R2000%&	9.2000	0.3	C	B, D, F	E, N	No Source
G311P813#9R3100%&	9.3100	0.3	C	B, D, F	E, N	No Source
G311P813#9R4200%&	9.4200	0.3	C	B, D, F	E, N	No Source
G311P813#9R5300%&	9.5300	0.3	C	B, D, F	E, N	No Source
G311P813#9R6500%&	9.6500	0.3	C	B, D, F	E, N	No Source
G311P813#9R7600%&	9.7600	0.3	C	B, D, F	E, N	No Source
G311P813#9R8800%&	9.8800	0.3	C	B, D, F	E, N	No Source
	Resistance	Power	Temperature	Resistance	Performance	
Part Number	Value (Ohms)	Rating (W)	Characteristic (#)	Tolerance (%)	Processing (&)	Manufacturer

S-311-P-813 Precision Resistors : 10.000 Ohms through 98.800 Ohms

	Resistance	Power	Temperature	Resistance	Performance	
Part Number	Value (Ohms)	Rating (W)	Characteristic (#)	Tolerance (%)	Processing (&)	Manufacturer
G311P813#10R000%&	10.000	0.3	B, C	B, D, F	E, N	No Source
G311P813#10R100%&	10.100	0.3	B, C	B, D, F	E, N	No Source
G311P813#10R200%&	10.200	0.3	B, C	B, D, F	E, N	No Source
G311P813#10R400%&	10.400	0.3	B, C	B, D, F	E, N	No Source
G311P813#10R500%&	10.500	0.3	B, C	B, D, F	E, N	No Source
G311P813#10R600%&	10.600	0.3	B, C	B, D, F	E, N	No Source
G311P813#10R700%&	10.700	0.3	B, C	B, D, F	E, N	No Source
G311P813#10R900%&	10.900	0.3	B, C	B, D, F	E, N	No Source
G311P813#11R000%&	11.000	0.3	B, C	B, D, F	E, N	No Source
G311P813#11R100%&	11.100	0.3	B, C	B, D, F	E, N	No Source
G311P813#11R300%&	11.300	0.3	B, C	B, D, F	E, N	No Source
G311P813#11R400%&	11.400	0.3	B, C	B, D, F	E, N	No Source
G311P813#11R500%&	11.500	0.3	B, C	B, D, F	E, N	No Source
G311P813#11R700%&	11.700	0.3	B, C	B, D, F	E, N	No Source
	Resistance	Power	Temperature	Resistance	Performance	
Part Number	Value (Ohms)	Rating (W)	Characteristic (#)	Tolerance (%)	Processing (&)	Manufacturer
G311P813#11R800%&	11.800	0.3	B, C	B, D, F	E, N	No Source
G311P813#12R000%&	12.000	0.3	B, C	B, D, F	E, N	No Source
G311P813#12R100%&	12.100	0.3	B, C	B, D, F	E, N	No Source
G311P813#12R300%&	12.300	0.3	B, C	B, D, F	E, N	No Source
G311P813#12R400%&	12.400	0.3	B, C	B, D, F	E, N	No Source
G311P813#12R600%&	12.600	0.3	B, C	B, D, F	E, N	No Source
G311P813#12R700%&	12.700	0.3	B, C	B, D, F	E, N	No Source
G311P813#12R900%&	12.900	0.3	B, C	B, D, F	E, N	No Source
G311P813#13R000%&	13.000	0.3	B, C	B, D, F	E, N	No Source
G311P813#13R200%&	13.200	0.3	B, C	B, D, F	E, N	No Source
G311P813#13R300%&	13.300	0.3	B, C	B, D, F	E, N	No Source
G311P813#13R500%&	13.500	0.3	B, C	B, D, F	E, N	No Source
G311P813#13R700%&	13.700	0.3	B, C	B, D, F	E, N	No Source

G311P813#13R800%&	13.800	0.3	B, C	B, D, F	E, N	No Source
	Resistance	Power	Temperature	Resistance	Performance	
Part Number	Value (Ohms)	Rating (W)	Characteristic (#)	Tolerance (%)	Processing (&)	Manufacturer
G311P813#14R000%&	14.000	0.3	B, C	B, D, F	E, N	No Source
G311P813#14R200%&	14.200	0.3	B, C	B, D, F	E, N	No Source
G311P813#14R300%&	14.300	0.3	B, C	B, D, F	E, N	No Source
G311P813#14R500%&	14.500	0.3	B, C	B, D, F	E, N	No Source
G311P813#14R700%&	14.700	0.3	B, C	B, D, F	E, N	No Source
G311P813#14R900%&	14.900	0.3	B, C	B, D, F	E, N	No Source
G311P813#15R000%&	15.000	0.3	B, C	B, D, F	E, N	No Source
G311P813#15R200%&	15.200	0.3	B, C	B, D, F	E, N	No Source
G311P813#15R400%&	15.400	0.3	B, C	B, D, F	E, N	No Source
G311P813#15R600%&	15.600	0.3	B, C	B, D, F	E, N	No Source
G311P813#15R800%&	15.800	0.3	B, C	B, D, F	E, N	No Source
G311P813#16R000%&	16.000	0.3	B, C	B, D, F	E, N	No Source
G311P813#16R200%&	16.200	0.3	B, C	B, D, F	E, N	No Source
G311P813#16R400%&	16.400	0.3	B, C	B, D, F	E, N	No Source
	Resistance	Power	Temperature	Resistance	Performance	
Part Number	Value (Ohms)	Rating (W)	Characteristic (#)	Tolerance (%)	Processing (&)	Manufacturer
G311P813#16R500%&	16.500	0.3	B, C	B, D, F	E, N	No Source
G311P813#16R700%&	16.700	0.3	B, C	B, D, F	E, N	No Source
G311P813#16R900%&	16.900	0.3	B, C	B, D, F	E, N	No Source
G311P813#17R200%&	17.200	0.3	B, C	B, D, F	E, N	No Source
G311P813#17R400%&	17.400	0.3	B, C	B, D, F	E, N	No Source
G311P813#17R600%&	17.600	0.3	B, C	B, D, F	E, N	No Source
G311P813#17R800%&	17.800	0.3	B, C	B, D, F	E, N	No Source
G311P813#18R000%&	18.000	0.3	B, C	B, D, F	E, N	No Source
G311P813#18R200%&	18.200	0.3	B, C	B, D, F	E, N	No Source
G311P813#18R400%&	18.400	0.3	B, C	B, D, F	E, N	No Source
G311P813#18R700%&	18.700	0.3	B, C	B, D, F	E, N	No Source
G311P813#18R900%&	18.900	0.3	B, C	B, D, F	E, N	No Source
G311P813#19R100%&	19.100	0.3	B, C	B, D, F	E, N	No Source
G311P813#19R300%&	19.300	0.3	B, C	B, D, F	E, N	No Source
	Resistance	Power	Temperature	Resistance	Performance	
Part Number	Value (Ohms)	Rating (W)	Characteristic (#)	Tolerance (%)	Processing (&)	Manufacturer
G311P813#19R600%&	19.600	0.3	B, C	B, D, F	E, N	No Source
G311P813#19R800%&	19.800	0.3	B, C	B, D, F	E, N	No Source
G311P813#20R000%&	20.000	0.3	B, C	B, D, F	E, N	No Source
G311P813#20R300%&	20.300	0.3	B, C	B, D, F	E, N	No Source
G311P813#20R500%&	20.500	0.3	B, C	B, D, F	E, N	No Source
G311P813#20R800%&	20.800	0.3	B, C	B, D, F	E, N	No Source
G311P813#21R000%&	21.000	0.3	B, C	B, D, F	E, N	No Source
G311P813#21R300%&	21.300	0.3	B, C	B, D, F	E, N	No Source
G311P813#21R500%&	21.500	0.3	B, C	B, D, F	E, N	No Source
G311P813#21R800%&	21.800	0.3	B, C	B, D, F	E, N	No Source
G311P813#22R100%&	22.100	0.3	B, C	B, D, F	E, N	No Source
G311P813#22R300%&	22.300	0.3	B, C	B, D, F	E, N	No Source

G311P813#22R600%&	22.600	0.3	B, C	B, D, F	E, N	No Source
G311P813#22R900%&	22.900	0.3	B, C	B, D, F	E, N	No Source
	Resistance	Power	Temperature	Resistance	Performance	
Part Number	Value (Ohms)	Rating (W)	Characteristic (#)	Tolerance (%)	Processing (&)	Manufacturer
G311P813#23R200%&	23.200	0.3	B, C	B, D, F	E, N	No Source
G311P813#23R400%&	23.400	0.3	B, C	B, D, F	E, N	No Source
G311P813#23R700%&	23.700	0.3	B, C	B, D, F	E, N	No Source
G311P813#24R000%&	24.000	0.3	B, C	B, D, F	E, N	No Source
G311P813#24R300%&	24.300	0.3	B, C	B, D, F	E, N	No Source
G311P813#24R600%&	24.600	0.3	B, C	B, D, F	E, N	No Source
G311P813#24R900%&	24.900	0.3	B, C	B, D, F	E, N	No Source
G311P813#25R200%&	25.200	0.3	B, C	B, D, F	E, N	No Source
G311P813#25R500%&	25.500	0.3	B, C	B, D, F	E, N	No Source
G311P813#25R800%&	25.800	0.3	B, C	B, D, F	E, N	No Source
G311P813#26R100%&	26.100	0.3	B, C	B, D, F	E, N	No Source
G311P813#26R400%&	26.400	0.3	B, C	B, D, F	E, N	No Source
G311P813#26R700%&	26.700	0.3	B, C	B, D, F	E, N	No Source
G311P813#27R100%&	27.100	0.3	B, C	B, D, F	E, N	No Source
	Resistance	Power	Temperature	Resistance	Performance	
Part Number	Value (Ohms)	Rating (W)	Characteristic (#)	Tolerance (%)	Processing (&)	Manufacturer
G311P813#27R400%&	27.400	0.3	B, C	B, D, F	E, N	No Source
G311P813#27R700%&	27.700	0.3	B, C	B, D, F	E, N	No Source
G311P813#28R000%&	28.000	0.3	B, C	B, D, F	E, N	No Source
G311P813#28R400%&	28.400	0.3	B, C	B, D, F	E, N	No Source
G311P813#28R700%&	28.700	0.3	B, C	B, D, F	E, N	No Source
G311P813#29R100%&	29.100	0.3	B, C	B, D, F	E, N	No Source
G311P813#29R400%&	29.400	0.3	B, C	B, D, F	E, N	No Source
G311P813#29R800%&	29.800	0.3	B, C	B, D, F	E, N	No Source
G311P813#30R100%&	30.100	0.3	B, C	V,T,Q,A,B,D,F	E, N	No Source
G311P813#30R500%&	30.500	0.3	B, C	V,T,Q,A,B,D,F	E, N	No Source
G311P813#30R900%&	30.900	0.3	B, C	V,T,Q,A,B,D,F	E, N	No Source
G311P813#31R200%&	31.200	0.3	B, C	V,T,Q,A,B,D,F	E, N	No Source
G311P813#31R600%&	31.600	0.3	B, C	V,T,Q,A,B,D,F	E, N	No Source
G311P813#32R000%&	32.000	0.3	B, C	V,T,Q,A,B,D,F	E, N	No Source
	Resistance	Power	Temperature	Resistance	Performance	
Part Number	Value (Ohms)	Rating (W)	Characteristic (#)	Tolerance (%)	Processing (&)	Manufacturer
G311P813#32R400%&	32.400	0.3	B, C	V,T,Q,A,B,D,F	E, N	No Source
G311P813#32R800%&	32.800	0.3	B, C	V,T,Q,A,B,D,F	E, N	No Source
G311P813#33R200%&	33.200	0.3	B, C	V,T,Q,A,B,D,F	E, N	No Source
G311P813#33R600%&	33.600	0.3	B, C	V,T,Q,A,B,D,F	E, N	No Source
G311P813#34R000%&	34.000	0.3	B, C	V,T,Q,A,B,D,F	E, N	No Source
G311P813#34R400%&	34.400	0.3	B, C	V,T,Q,A,B,D,F	E, N	No Source
G311P813#34R800%&	34.800	0.3	B, C	V,T,Q,A,B,D,F	E, N	No Source
G311P813#35R200%&	35.200	0.3	B, C	V,T,Q,A,B,D,F	E, N	No Source
G311P813#35R700%&	35.700	0.3	B, C	V,T,Q,A,B,D,F	E, N	No Source
G311P813#36R100%&	36.100	0.3	B, C	V,T,Q,A,B,D,F	E, N	No Source
G311P813#36R500%&	36.500	0.3	B, C	V,T,Q,A,B,D,F	E, N	No Source

G311P813#37R000%&	37.000	0.3	B, C	V,T,Q,A,B,D,F	E, N	No Source
G311P813#37R400%&	37.400	0.3	B, C	V,T,Q,A,B,D,F	E, N	No Source
G311P813#37R900%&	37.900	0.3	B, C	V,T,Q,A,B,D,F	E, N	No Source
	Resistance	Power	Temperature	Resistance	Performance	
Part Number	Value (Ohms)	Rating (W)	Characteristic (#)	Tolerance (%)	Processing (&)	Manufacturer
G311P813#38R300%&	38.300	0.3	B, C	V,T,Q,A,B,D,F	E, N	No Source
G311P813#38R800%&	38.800	0.3	B, C	V,T,Q,A,B,D,F	E, N	No Source
G311P813#39R200%&	39.200	0.3	B, C	V,T,Q,A,B,D,F	E, N	No Source
G311P813#39R700%&	39.700	0.3	B, C	V,T,Q,A,B,D,F	E, N	No Source
G311P813#40R200%&	40.200	0.3	B, C	V,T,Q,A,B,D,F	E, N	No Source
G311P813#40R700%&	40.700	0.3	B, C	V,T,Q,A,B,D,F	E, N	No Source
G311P813#41R200%&	41.200	0.3	B, C	V,T,Q,A,B,D,F	E, N	No Source
G311P813#41R700%&	41.700	0.3	B, C	V,T,Q,A,B,D,F	E, N	No Source
G311P813#42R200%&	42.200	0.3	B, C	V,T,Q,A,B,D,F	E, N	No Source
G311P813#42R700%&	42.700	0.3	B, C	V,T,Q,A,B,D,F	E, N	No Source
G311P813#43R200%&	43.200	0.3	B, C	V,T,Q,A,B,D,F	E, N	No Source
G311P813#43R700%&	43.700	0.3	B, C	V,T,Q,A,B,D,F	E, N	No Source
G311P813#44R200%&	44.200	0.3	B, C	V,T,Q,A,B,D,F	E, N	No Source
G311P813#44R800%&	44.800	0.3	B, C	V,T,Q,A,B,D,F	E, N	No Source
	Resistance	Power	Temperature	Resistance	Performance	
Part Number	Value (Ohms)	Rating (W)	Characteristic (#)	Tolerance (%)	Processing (&)	Manufacturer
G311P813#45R300%&	45.300	0.3	B, C	V,T,Q,A,B,D,F	E, N	No Source
G311P813#45R900%&	45.900	0.3	B, C	V,T,Q,A,B,D,F	E, N	No Source
G311P813#46R400%&	46.400	0.3	B, C	V,T,Q,A,B,D,F	E, N	No Source
G311P813#47R000%&	47.000	0.3	B, C	V,T,Q,A,B,D,F	E, N	No Source
G311P813#47R500%&	47.500	0.3	B, C	V,T,Q,A,B,D,F	E, N	No Source
G311P813#48R100%&	48.100	0.3	B, C	V,T,Q,A,B,D,F	E, N	No Source
G311P813#48R700%&	48.700	0.3	B, C	V,T,Q,A,B,D,F	E, N	No Source
G311P813#49R300%&	49.300	0.3	B, C	V,T,Q,A,B,D,F	E, N	No Source
G311P813#49R900%&	49.900	0.3	B, C	V,T,Q,A,B,D,F	E, N	No Source
G311P813#50R500%&	50.500	0.3	B, C	V,T,Q,A,B,D,F	E, N	No Source
G311P813#51R100%&	51.100	0.3	B, C	V,T,Q,A,B,D,F	E, N	No Source
G311P813#51R700%&	51.700	0.3	B, C	V,T,Q,A,B,D,F	E, N	No Source
G311P813#52R300%&	52.300	0.3	B, C	V,T,Q,A,B,D,F	E, N	No Source
G311P813#53R000%&	53.000	0.3	B, C	V,T,Q,A,B,D,F	E, N	No Source
	Resistance	Power	Temperature	Resistance	Performance	
Part Number	Value (Ohms)	Rating (W)	Characteristic (#)	Tolerance (%)	Processing (&)	Manufacturer
G311P813#53R600%&	53.600	0.3	B, C	V,T,Q,A,B,D,F	E, N	No Source
G311P813#54R200%&	54.200	0.3	B, C	V,T,Q,A,B,D,F	E, N	No Source
G311P813#54R900%&	54.900	0.3	B, C	V,T,Q,A,B,D,F	E, N	No Source
G311P813#55R600%&	55.600	0.3	B, C	V,T,Q,A,B,D,F	E, N	No Source
G311P813#56R200%&	56.200	0.3	B, C	V,T,Q,A,B,D,F	E, N	No Source
G311P813#56R900%&	56.900	0.3	B, C	V,T,Q,A,B,D,F	E, N	No Source
G311P813#57R600%&	57.600	0.3	B, C	V,T,Q,A,B,D,F	E, N	No Source
G311P813#58R300%&	58.300	0.3	B, C	V,T,Q,A,B,D,F	E, N	No Source
G311P813#59R000%&	59.000	0.3	B, C	V,T,Q,A,B,D,F	E, N	No Source
G311P813#59R700%&	59.700	0.3	B, C	V,T,Q,A,B,D,F	E, N	No Source

G311P813#60R400%&	60.400	0.3	B, C	V,T,Q,A,B,D,F	E, N	No Source
G311P813#61R200%&	61.200	0.3	B, C	V,T,Q,A,B,D,F	E, N	No Source
G311P813#61R900%&	61.900	0.3	B, C	V,T,Q,A,B,D,F	E, N	No Source
G311P813#62R600%&	62.600	0.3	B, C	V,T,Q,A,B,D,F	E, N	No Source
	Resistance	Power	Temperature	Resistance	Performance	
Part Number	Value (Ohms)	Rating (W)	Characteristic (#)	Tolerance (%)	Processing (&)	Manufacturer
G311P813#63R400%&	63.400	0.3	B, C	V,T,Q,A,B,D,F	E, N	No Source
G311P813#64R200%&	64.200	0.3	B, C	V,T,Q,A,B,D,F	E, N	No Source
G311P813#64R900%&	64.900	0.3	B, C	V,T,Q,A,B,D,F	E, N	No Source
G311P813#65R700%&	65.700	0.3	B, C	V,T,Q,A,B,D,F	E, N	No Source
G311P813#66R500%&	66.500	0.3	B, C	V,T,Q,A,B,D,F	E, N	No Source
G311P813#67R300%&	67.300	0.3	B, C	V,T,Q,A,B,D,F	E, N	No Source
G311P813#68R100%&	68.100	0.3	B, C	V,T,Q,A,B,D,F	E, N	No Source
G311P813#69R000%&	69.000	0.3	B, C	V,T,Q,A,B,D,F	E, N	No Source
G311P813#69R800%&	69.800	0.3	B, C	V,T,Q,A,B,D,F	E, N	No Source
G311P813#70R600%&	70.600	0.3	B, C	V,T,Q,A,B,D,F	E, N	No Source
G311P813#71R500%&	71.500	0.3	B, C	V,T,Q,A,B,D,F	E, N	No Source
G311P813#72R300%&	72.300	0.3	B, C	V,T,Q,A,B,D,F	E, N	No Source
G311P813#73R200%&	73.200	0.3	B, C	V,T,Q,A,B,D,F	E, N	No Source
G311P813#74R100%&	74.100	0.3	B, C	V,T,Q,A,B,D,F	E, N	No Source
	Resistance	Power	Temperature	Resistance	Performance	
Part Number	Value (Ohms)	Rating (W)	Characteristic (#)	Tolerance (%)	Processing (&)	Manufacturer
G311P813#75R000%&	75.000	0.3	B, C	V,T,Q,A,B,D,F	E, N	No Source
G311P813#75R900%&	75.900	0.3	B, C	V,T,Q,A,B,D,F	E, N	No Source
G311P813#76R800%&	76.800	0.3	B, C	V,T,Q,A,B,D,F	E, N	No Source
G311P813#77R700%&	77.700	0.3	B, C	V,T,Q,A,B,D,F	E, N	No Source
G311P813#78R700%&	78.700	0.3	B, C	V,T,Q,A,B,D,F	E, N	No Source
G311P813#79R600%&	79.600	0.3	B, C	V,T,Q,A,B,D,F	E, N	No Source
G311P813#80R600%&	80.600	0.3	B, C	V,T,Q,A,B,D,F	E, N	No Source
G311P813#81R600%&	81.600	0.3	B, C	V,T,Q,A,B,D,F	E, N	No Source
G311P813#82R500%&	82.500	0.3	B, C	V,T,Q,A,B,D,F	E, N	No Source
G311P813#83R500%&	83.500	0.3	B, C	V,T,Q,A,B,D,F	E, N	No Source
G311P813#84R500%&	84.500	0.3	B, C	V,T,Q,A,B,D,F	E, N	No Source
G311P813#85R600%&	85.600	0.3	B, C	V,T,Q,A,B,D,F	E, N	No Source
G311P813#86R600%&	86.600	0.3	B, C	V,T,Q,A,B,D,F	E, N	No Source
G311P813#87R600%&	87.600	0.3	B, C	V,T,Q,A,B,D,F	E, N	No Source
	Resistance	Power	Temperature	Resistance	Performance	
Part Number	Value (Ohms)	Rating (W)	Characteristic (#)	Tolerance (%)	Processing (&)	Manufacturer
G311P813#88R700%&	88.700	0.3	B, C	V,T,Q,A,B,D,F	E, N	No Source
G311P813#89R800%&	89.800	0.3	B, C	V,T,Q,A,B,D,F	E, N	No Source
G311P813#90R900%&	90.900	0.3	B, C	V,T,Q,A,B,D,F	E, N	No Source
G311P813#92R000%&	92.000	0.3	B, C	V,T,Q,A,B,D,F	E, N	No Source
G311P813#93R100%&	93.100	0.3	B, C	V,T,Q,A,B,D,F	E, N	No Source
G311P813#94R200%&	94.200	0.3	B, C	V,T,Q,A,B,D,F	E, N	No Source
G311P813#95R300%&	95.300	0.3	B, C	V,T,Q,A,B,D,F	E, N	No Source
G311P813#96R500%&	96.500	0.3	B, C	V,T,Q,A,B,D,F	E, N	No Source
G311P813#97R600%&	97.600	0.3	B, C	V,T,Q,A,B,D,F	E, N	No Source

G311P813#98R800%&	98.800	0.3	B, C	V,T,Q,A,B,D,F	E, N	No Source
	Resistance	Power	Temperature	Resistance	Performance	
Part Number	Value (Ohms)	Rating (W)	Characteristic (#)	Tolerance (%)	Processing (&)	Manufacturer

S-311-P-813 Precision Resistors : 100.00 Ohms through 988.00 Ohms

	Resistance	Power	Temperature	Resistance	Performance	
Part Number	Value (Ohms)	Rating (W)	Characteristic (#)	Tolerance (%)	Processing (&)	Manufacturer
G311P813#100R00%&	100.00	0.3	B, C, D	V,T,Q,A,B,D,F	E, N	WIL
G311P813#101R00%&	101.00	0.3	B, C, D	V,T,Q,A,B,D,F	E, N	WIL
G311P813#102R00%&	102.00	0.3	B, C, D	V,T,Q,A,B,D,F	E, N	WIL
G311P813#104R00%&	104.00	0.3	B, C, D	V,T,Q,A,B,D,F	E, N	WIL
G311P813#105R00%&	105.00	0.3	B, C, D	V,T,Q,A,B,D,F	E, N	WIL
G311P813#106R00%&	106.00	0.3	B, C, D	V,T,Q,A,B,D,F	E, N	WIL
G311P813#107R00%&	107.00	0.3	B, C, D	V,T,Q,A,B,D,F	E, N	WIL
G311P813#109R00%&	109.00	0.3	B, C, D	V,T,Q,A,B,D,F	E, N	WIL
G311P813#110R00%&	110.00	0.3	B, C, D	V,T,Q,A,B,D,F	E, N	WIL
G311P813#111R00%&	111.00	0.3	B, C, D	V,T,Q,A,B,D,F	E, N	WIL
G311P813#113R00%&	113.00	0.3	B, C, D	V,T,Q,A,B,D,F	E, N	WIL
G311P813#114R00%&	114.00	0.3	B, C, D	V,T,Q,A,B,D,F	E, N	WIL
G311P813#115R00%&	115.00	0.3	B, C, D	V,T,Q,A,B,D,F	E, N	WIL
G311P813#117R00%&	117.00	0.3	B, C, D	V,T,Q,A,B,D,F	E, N	WIL
	Resistance	Power	Temperature	Resistance	Performance	
Part Number	Value (Ohms)	Rating (W)	Characteristic (#)	Tolerance (%)	Processing (&)	Manufacturer
G311P813#118R00%&	118.00	0.3	B, C, D	V,T,Q,A,B,D,F	E, N	WIL
G311P813#120R00%&	120.00	0.3	B, C, D	V,T,Q,A,B,D,F	E, N	WIL
G311P813#121R00%&	121.00	0.3	B, C, D	V,T,Q,A,B,D,F	E, N	WIL
G311P813#123R00%&	123.00	0.3	B, C, D	V,T,Q,A,B,D,F	E, N	WIL
G311P813#124R00%&	124.00	0.3	B, C, D	V,T,Q,A,B,D,F	E, N	WIL
G311P813#126R00%&	126.00	0.3	B, C, D	V,T,Q,A,B,D,F	E, N	WIL
G311P813#127R00%&	127.00	0.3	B, C, D	V,T,Q,A,B,D,F	E, N	WIL
G311P813#129R00%&	129.00	0.3	B, C, D	V,T,Q,A,B,D,F	E, N	WIL
G311P813#130R00%&	130.00	0.3	B, C, D	V,T,Q,A,B,D,F	E, N	WIL
G311P813#132R00%&	132.00	0.3	B, C, D	V,T,Q,A,B,D,F	E, N	WIL
G311P813#133R00%&	133.00	0.3	B, C, D	V,T,Q,A,B,D,F	E, N	WIL
G311P813#135R00%&	135.00	0.3	B, C, D	V,T,Q,A,B,D,F	E, N	WIL
G311P813#137R00%&	137.00	0.3	B, C, D	V,T,Q,A,B,D,F	E, N	WIL
G311P813#138R00%&	138.00	0.3	B, C, D	V,T,Q,A,B,D,F	E, N	WIL
	Resistance	Power	Temperature	Resistance	Performance	
Part Number	Value (Ohms)	Rating (W)	Characteristic (#)	Tolerance (%)	Processing (&)	Manufacturer
G311P813#140R00%&	140.00	0.3	B, C, D	V,T,Q,A,B,D,F	E, N	WIL
G311P813#142R00%&	142.00	0.3	B, C, D	V,T,Q,A,B,D,F	E, N	WIL
G311P813#143R00%&	143.00	0.3	B, C, D	V,T,Q,A,B,D,F	E, N	WIL
G311P813#145R00%&	145.00	0.3	B, C, D	V,T,Q,A,B,D,F	E, N	WIL
G311P813#147R00%&	147.00	0.3	B, C, D	V,T,Q,A,B,D,F	E, N	WIL

G311P813#149R00%&	149.00	0.3	B, C, D	V,T,Q,A,B,D,F	E, N	WIL
G311P813#150R00%&	150.00	0.3	B, C, D	V,T,Q,A,B,D,F	E, N	WIL
G311P813#152R00%&	152.00	0.3	B, C, D	V,T,Q,A,B,D,F	E, N	WIL
G311P813#154R00%&	154.00	0.3	B, C, D	V,T,Q,A,B,D,F	E, N	WIL
G311P813#156R00%&	156.00	0.3	B, C, D	V,T,Q,A,B,D,F	E, N	WIL
G311P813#158R00%&	158.00	0.3	B, C, D	V,T,Q,A,B,D,F	E, N	WIL
G311P813#160R00%&	160.00	0.3	B, C, D	V,T,Q,A,B,D,F	E, N	WIL
G311P813#162R00%&	162.00	0.3	B, C, D	V,T,Q,A,B,D,F	E, N	WIL
G311P813#164R00%&	164.00	0.3	B, C, D	V,T,Q,A,B,D,F	E, N	WIL
	Resistance	Power	Temperature	Resistance	Performance	
Part Number	Value (Ohms)	Rating (W)	Characteristic (#)	Tolerance (%)	Processing (&)	Manufacturer
G311P813#165R00%&	165.00	0.3	B, C, D	V,T,Q,A,B,D,F	E, N	WIL
G311P813#167R00%&	167.00	0.3	B, C, D	V,T,Q,A,B,D,F	E, N	WIL
G311P813#169R00%&	169.00	0.3	B, C, D	V,T,Q,A,B,D,F	E, N	WIL
G311P813#172R00%&	172.00	0.3	B, C, D	V,T,Q,A,B,D,F	E, N	WIL
G311P813#174R00%&	174.00	0.3	B, C, D	V,T,Q,A,B,D,F	E, N	WIL
G311P813#176R00%&	176.00	0.3	B, C, D	V,T,Q,A,B,D,F	E, N	WIL
G311P813#178R00%&	178.00	0.3	B, C, D	V,T,Q,A,B,D,F	E, N	WIL
G311P813#180R00%&	180.00	0.3	B, C, D	V,T,Q,A,B,D,F	E, N	WIL
G311P813#182R00%&	182.00	0.3	B, C, D	V,T,Q,A,B,D,F	E, N	WIL
G311P813#184R00%&	184.00	0.3	B, C, D	V,T,Q,A,B,D,F	E, N	WIL
G311P813#187R00%&	187.00	0.3	B, C, D	V,T,Q,A,B,D,F	E, N	WIL
G311P813#189R00%&	189.00	0.3	B, C, D	V,T,Q,A,B,D,F	E, N	WIL
G311P813#191R00%&	191.00	0.3	B, C, D	V,T,Q,A,B,D,F	E, N	WIL
G311P813#193R00%&	193.00	0.3	B, C, D	V,T,Q,A,B,D,F	E, N	WIL
	Resistance	Power	Temperature	Resistance	Performance	
Part Number	Value (Ohms)	Rating (W)	Characteristic (#)	Tolerance (%)	Processing (&)	Manufacturer
G311P813#196R00%&	196.00	0.3	B, C, D	V,T,Q,A,B,D,F	E, N	WIL
G311P813#198R00%&	198.00	0.3	B, C, D	V,T,Q,A,B,D,F	E, N	WIL
G311P813#200R00%&	200.00	0.3	B, C, D	V,T,Q,A,B,D,F	E, N	WIL
G311P813#203R00%&	203.00	0.3	B, C, D	V,T,Q,A,B,D,F	E, N	WIL
G311P813#205R00%&	205.00	0.3	B, C, D	V,T,Q,A,B,D,F	E, N	WIL
G311P813#208R00%&	208.00	0.3	B, C, D	V,T,Q,A,B,D,F	E, N	WIL
G311P813#210R00%&	210.00	0.3	B, C, D	V,T,Q,A,B,D,F	E, N	WIL
G311P813#213R00%&	213.00	0.3	B, C, D	V,T,Q,A,B,D,F	E, N	WIL
G311P813#215R00%&	215.00	0.3	B, C, D	V,T,Q,A,B,D,F	E, N	WIL
G311P813#218R00%&	218.00	0.3	B, C, D	V,T,Q,A,B,D,F	E, N	WIL
G311P813#221R00%&	221.00	0.3	B, C, D	V,T,Q,A,B,D,F	E, N	WIL
G311P813#223R00%&	223.00	0.3	B, C, D	V,T,Q,A,B,D,F	E, N	WIL
G311P813#226R00%&	226.00	0.3	B, C, D	V,T,Q,A,B,D,F	E, N	WIL
G311P813#229R00%&	229.00	0.3	B, C, D	V,T,Q,A,B,D,F	E, N	WIL
	Resistance	Power	Temperature	Resistance	Performance	
Part Number	Value (Ohms)	Rating (W)	Characteristic (#)	Tolerance (%)	Processing (&)	Manufacturer
G311P813#232R00%&	232.00	0.3	B, C, D	V,T,Q,A,B,D,F	E, N	WIL
G311P813#234R00%&	234.00	0.3	B, C, D	V,T,Q,A,B,D,F	E, N	WIL
G311P813#237R00%&	237.00	0.3	B, C, D	V,T,Q,A,B,D,F	E, N	WIL
G311P813#240R00%&	240.00	0.3	B, C, D	V,T,Q,A,B,D,F	E, N	WIL

G311P813#243R00%&	243.00	0.3	B, C, D	V,T,Q,A,B,D,F	E, N	WIL
G311P813#246R00%&	246.00	0.3	B, C, D	V,T,Q,A,B,D,F	E, N	WIL
G311P813#249R00%&	249.00	0.3	B, C, D	V,T,Q,A,B,D,F	E, N	WIL
G311P813#252R00%&	252.00	0.3	B, C, D	V,T,Q,A,B,D,F	E, N	WIL
G311P813#255R00%&	255.00	0.3	B, C, D	V,T,Q,A,B,D,F	E, N	WIL
G311P813#258R00%&	258.00	0.3	B, C, D	V,T,Q,A,B,D,F	E, N	WIL
G311P813#261R00%&	261.00	0.3	B, C, D	V,T,Q,A,B,D,F	E, N	WIL
G311P813#264R00%&	264.00	0.3	B, C, D	V,T,Q,A,B,D,F	E, N	WIL
G311P813#267R00%&	267.00	0.3	B, C, D	V,T,Q,A,B,D,F	E, N	WIL
G311P813#271R00%&	271.00	0.3	B, C, D	V,T,Q,A,B,D,F	E, N	WIL
	Resistance	Power	Temperature	Resistance	Performance	
Part Number	Value (Ohms)	Rating (W)	Characteristic (#)	Tolerance (%)	Processing (&)	Manufacturer
G311P813#274R00%&	274.00	0.3	B, C, D	V,T,Q,A,B,D,F	E, N	WIL
G311P813#277R00%&	277.00	0.3	B, C, D	V,T,Q,A,B,D,F	E, N	WIL
G311P813#280R00%&	280.00	0.3	B, C, D	V,T,Q,A,B,D,F	E, N	WIL
G311P813#284R00%&	284.00	0.3	B, C, D	V,T,Q,A,B,D,F	E, N	WIL
G311P813#287R00%&	287.00	0.3	B, C, D	V,T,Q,A,B,D,F	E, N	WIL
G311P813#291R00%&	291.00	0.3	B, C, D	V,T,Q,A,B,D,F	E, N	WIL
G311P813#294R00%&	294.00	0.3	B, C, D	V,T,Q,A,B,D,F	E, N	WIL
G311P813#298R00%&	298.00	0.3	B, C, D	V,T,Q,A,B,D,F	E, N	WIL
G311P813#301R00%&	301.00	0.3	B, C, D	V,T,Q,A,B,D,F	E, N	WIL
G311P813#305R00%&	305.00	0.3	B, C, D	V,T,Q,A,B,D,F	E, N	WIL
G311P813#309R00%&	309.00	0.3	B, C, D	V,T,Q,A,B,D,F	E, N	WIL
G311P813#312R00%&	312.00	0.3	B, C, D	V,T,Q,A,B,D,F	E, N	WIL
G311P813#316R00%&	316.00	0.3	B, C, D	V,T,Q,A,B,D,F	E, N	WIL
G311P813#320R00%&	320.00	0.3	B, C, D	V,T,Q,A,B,D,F	E, N	WIL
	Resistance	Power	Temperature	Resistance	Performance	
Part Number	Value (Ohms)	Rating (W)	Characteristic (#)	Tolerance (%)	Processing (&)	Manufacturer
G311P813#324R00%&	324.00	0.3	B, C, D	V,T,Q,A,B,D,F	E, N	WIL
G311P813#328R00%&	328.00	0.3	B, C, D	V,T,Q,A,B,D,F	E, N	WIL
G311P813#332R00%&	332.00	0.3	B, C, D	V,T,Q,A,B,D,F	E, N	WIL
G311P813#336R00%&	336.00	0.3	B, C, D	V,T,Q,A,B,D,F	E, N	WIL
G311P813#340R00%&	340.00	0.3	B, C, D	V,T,Q,A,B,D,F	E, N	WIL
G311P813#344R00%&	344.00	0.3	B, C, D	V,T,Q,A,B,D,F	E, N	WIL
G311P813#348R00%&	348.00	0.3	B, C, D	V,T,Q,A,B,D,F	E, N	WIL
G311P813#352R00%&	352.00	0.3	B, C, D	V,T,Q,A,B,D,F	E, N	WIL
G311P813#357R00%&	357.00	0.3	B, C, D	V,T,Q,A,B,D,F	E, N	WIL
G311P813#361R00%&	361.00	0.3	B, C, D	V,T,Q,A,B,D,F	E, N	WIL
G311P813#365R00%&	365.00	0.3	B, C, D	V,T,Q,A,B,D,F	E, N	WIL
G311P813#370R00%&	370.00	0.3	B, C, D	V,T,Q,A,B,D,F	E, N	WIL
G311P813#374R00%&	374.00	0.3	B, C, D	V,T,Q,A,B,D,F	E, N	WIL
G311P813#379R00%&	379.00	0.3	B, C, D	V,T,Q,A,B,D,F	E, N	WIL
	Resistance	Power	Temperature	Resistance	Performance	
Part Number	Value (Ohms)	Rating (W)	Characteristic (#)	Tolerance (%)	Processing (&)	Manufacturer
G311P813#383R00%&	383.00	0.3	B, C, D	V,T,Q,A,B,D,F	E, N	WIL
G311P813#388R00%&	388.00	0.3	B, C, D	V,T,Q,A,B,D,F	E, N	WIL
G311P813#392R00%&	392.00	0.3	B, C, D	V,T,Q,A,B,D,F	E, N	WIL

G311P813#397R00%&	397.00	0.3	B, C, D	V,T,Q,A,B,D,F	E, N	WIL
G311P813#402R00%&	402.00	0.3	B, C, D	V,T,Q,A,B,D,F	E, N	WIL
G311P813#407R00%&	407.00	0.3	B, C, D	V,T,Q,A,B,D,F	E, N	WIL
G311P813#412R00%&	412.00	0.3	B, C, D	V,T,Q,A,B,D,F	E, N	WIL
G311P813#417R00%&	417.00	0.3	B, C, D	V,T,Q,A,B,D,F	E, N	WIL
G311P813#422R00%&	422.00	0.3	B, C, D	V,T,Q,A,B,D,F	E, N	WIL
G311P813#427R00%&	427.00	0.3	B, C, D	V,T,Q,A,B,D,F	E, N	WIL
G311P813#432R00%&	432.00	0.3	B, C, D	V,T,Q,A,B,D,F	E, N	WIL
G311P813#437R00%&	437.00	0.3	B, C, D	V,T,Q,A,B,D,F	E, N	WIL
G311P813#442R00%&	442.00	0.3	B, C, D	V,T,Q,A,B,D,F	E, N	WIL
G311P813#448R00%&	448.00	0.3	B, C, D	V,T,Q,A,B,D,F	E, N	WIL
	Resistance	Power	Temperature	Resistance	Performance	
Part Number	Value (Ohms)	Rating (W)	Characteristic (#)	Tolerance (%)	Processing (&)	Manufacturer
G311P813#453R00%&	453.00	0.3	B, C, D	V,T,Q,A,B,D,F	E, N	WIL
G311P813#459R00%&	459.00	0.3	B, C, D	V,T,Q,A,B,D,F	E, N	WIL
G311P813#464R00%&	464.00	0.3	B, C, D	V,T,Q,A,B,D,F	E, N	WIL
G311P813#470R00%&	470.00	0.3	B, C, D	V,T,Q,A,B,D,F	E, N	WIL
G311P813#475R00%&	475.00	0.3	B, C, D	V,T,Q,A,B,D,F	E, N	WIL
G311P813#481R00%&	481.00	0.3	B, C, D	V,T,Q,A,B,D,F	E, N	WIL
G311P813#487R00%&	487.00	0.3	B, C, D	V,T,Q,A,B,D,F	E, N	WIL
G311P813#493R00%&	493.00	0.3	B, C, D	V,T,Q,A,B,D,F	E, N	WIL
G311P813#499R00%&	499.00	0.3	B, C, D	V,T,Q,A,B,D,F	E, N	WIL
G311P813#505R00%&	505.00	0.3	B, C, D	V,T,Q,A,B,D,F	E, N	WIL
G311P813#511R00%&	511.00	0.3	B, C, D	V,T,Q,A,B,D,F	E, N	WIL
G311P813#517R00%&	517.00	0.3	B, C, D	V,T,Q,A,B,D,F	E, N	WIL
G311P813#523R00%&	523.00	0.3	B, C, D	V,T,Q,A,B,D,F	E, N	WIL
G311P813#530R00%&	530.00	0.3	B, C, D	V,T,Q,A,B,D,F	E, N	WIL
	Resistance	Power	Temperature	Resistance	Performance	
Part Number	Value (Ohms)	Rating (W)	Characteristic (#)	Tolerance (%)	Processing (&)	Manufacturer
G311P813#536R00%&	536.00	0.3	B, C, D	V,T,Q,A,B,D,F	E, N	WIL
G311P813#542R00%&	542.00	0.3	B, C, D	V,T,Q,A,B,D,F	E, N	WIL
G311P813#549R00%&	549.00	0.3	B, C, D	V,T,Q,A,B,D,F	E, N	WIL
G311P813#556R00%&	556.00	0.3	B, C, D	V,T,Q,A,B,D,F	E, N	WIL
G311P813#562R00%&	562.00	0.3	B, C, D	V,T,Q,A,B,D,F	E, N	WIL
G311P813#569R00%&	569.00	0.3	B, C, D	V,T,Q,A,B,D,F	E, N	WIL
G311P813#576R00%&	576.00	0.3	B, C, D	V,T,Q,A,B,D,F	E, N	WIL
G311P813#583R00%&	583.00	0.3	B, C, D	V,T,Q,A,B,D,F	E, N	WIL
G311P813#590R00%&	590.00	0.3	B, C, D	V,T,Q,A,B,D,F	E, N	WIL
G311P813#597R00%&	597.00	0.3	B, C, D	V,T,Q,A,B,D,F	E, N	WIL
G311P813#604R00%&	604.00	0.3	B, C, D	V,T,Q,A,B,D,F	E, N	WIL
G311P813#612R00%&	612.00	0.3	B, C, D	V,T,Q,A,B,D,F	E, N	WIL
G311P813#619R00%&	619.00	0.3	B, C, D	V,T,Q,A,B,D,F	E, N	WIL
G311P813#626R00%&	626.00	0.3	B, C, D	V,T,Q,A,B,D,F	E, N	WIL
	Resistance	Power	Temperature	Resistance	Performance	
Part Number	Value (Ohms)	Rating (W)	Characteristic (#)	Tolerance (%)	Processing (&)	Manufacturer
G311P813#634R00%&	634.00	0.3	B, C, D	V,T,Q,A,B,D,F	E, N	WIL
G311P813#642R00%&	642.00	0.3	B, C, D	V,T,Q,A,B,D,F	E, N	WIL

G311P813#649R00%&	649.00	0.3	B, C, D	V,T,Q,A,B,D,F	E, N	WIL
G311P813#657R00%&	657.00	0.3	B, C, D	V,T,Q,A,B,D,F	E, N	WIL
G311P813#665R00%&	665.00	0.3	B, C, D	V,T,Q,A,B,D,F	E, N	WIL
G311P813#673R00%&	673.00	0.3	B, C, D	V,T,Q,A,B,D,F	E, N	WIL
G311P813#681R00%&	681.00	0.3	B, C, D	V,T,Q,A,B,D,F	E, N	WIL
G311P813#690R00%&	690.00	0.3	B, C, D	V,T,Q,A,B,D,F	E, N	WIL
G311P813#698R00%&	698.00	0.3	B, C, D	V,T,Q,A,B,D,F	E, N	WIL
G311P813#706R00%&	706.00	0.3	B, C, D	V,T,Q,A,B,D,F	E, N	WIL
G311P813#715R00%&	715.00	0.3	B, C, D	V,T,Q,A,B,D,F	E, N	WIL
G311P813#723R00%&	723.00	0.3	B, C, D	V,T,Q,A,B,D,F	E, N	WIL
G311P813#732R00%&	732.00	0.3	B, C, D	V,T,Q,A,B,D,F	E, N	WIL
G311P813#741R00%&	741.00	0.3	B, C, D	V,T,Q,A,B,D,F	E, N	WIL
	Resistance	Power	Temperature	Resistance	Performance	
Part Number	Value (Ohms)	Rating (W)	Characteristic (#)	Tolerance (%)	Processing (&)	Manufacturer
G311P813#750R00%&	750.00	0.3	B, C, D	V,T,Q,A,B,D,F	E, N	WIL
G311P813#759R00%&	759.00	0.3	B, C, D	V,T,Q,A,B,D,F	E, N	WIL
G311P813#767R00%&	767.00	0.3	B, C, D	V,T,Q,A,B,D,F	E, N	WIL
G311P813#776R00%&	776.00	0.3	B, C, D	V,T,Q,A,B,D,F	E, N	WIL
G311P813#786R00%&	786.00	0.3	B, C, D	V,T,Q,A,B,D,F	E, N	WIL
G311P813#795R00%&	795.00	0.3	B, C, D	V,T,Q,A,B,D,F	E, N	WIL
G311P813#805R00%&	805.00	0.3	B, C, D	V,T,Q,A,B,D,F	E, N	WIL
G311P813#815R00%&	815.00	0.3	B, C, D	V,T,Q,A,B,D,F	E, N	WIL
G311P813#824R00%&	824.00	0.3	B, C, D	V,T,Q,A,B,D,F	E, N	WIL
G311P813#834R00%&	834.00	0.3	B, C, D	V,T,Q,A,B,D,F	E, N	WIL
G311P813#844R00%&	844.00	0.3	B, C, D	V,T,Q,A,B,D,F	E, N	WIL
G311P813#855R00%&	855.00	0.3	B, C, D	V,T,Q,A,B,D,F	E, N	WIL
G311P813#865R00%&	865.00	0.3	B, C, D	V,T,Q,A,B,D,F	E, N	WIL
G311P813#875R00%&	875.00	0.3	B, C, D	V,T,Q,A,B,D,F	E, N	WIL
	Resistance	Power	Temperature	Resistance	Performance	
Part Number	Value (Ohms)	Rating (W)	Characteristic (#)	Tolerance (%)	Processing (&)	Manufacturer
G311P813#886R00%&	886.00	0.3	B, C, D	V,T,Q,A,B,D,F	E, N	WIL
G311P813#898R00%&	898.00	0.3	B, C, D	V,T,Q,A,B,D,F	E, N	WIL
G311P813#908R00%&	908.00	0.3	B, C, D	V,T,Q,A,B,D,F	E, N	WIL
G311P813#919R00%&	919.00	0.3	B, C, D	V,T,Q,A,B,D,F	E, N	WIL
G311P813#930R00%&	930.00	0.3	B, C, D	V,T,Q,A,B,D,F	E, N	WIL
G311P813#941R00%&	941.00	0.3	B, C, D	V,T,Q,A,B,D,F	E, N	WIL
G311P813#952R00%&	952.00	0.3	B, C, D	V,T,Q,A,B,D,F	E, N	WIL
G311P813#964R00%&	964.00	0.3	B, C, D	V,T,Q,A,B,D,F	E, N	WIL
G311P813#975R00%&	975.00	0.3	B, C, D	V,T,Q,A,B,D,F	E, N	WIL
G311P813#988R00%&	988.00	0.3	B, C, D	V,T,Q,A,B,D,F	E, N	WIL
	Resistance	Power	Temperature	Resistance	Performance	
Part Number	Value (Ohms)	Rating (W)	Characteristic (#)	Tolerance (%)	Processing (&)	Manufacturer

S-311-P-813 Precision Resistors: 1,000.0 Ohms through 9,880.0 Ohms

	Resistance	Power	Temperature	Resistance	Performance	
Part Number	Value (Ohms)	Rating (W)	Characteristic (#)	Tolerance (%)	Processing (&)	Manufacturer
G311P813#1K0000%&	1,000.0	0.3	A, B, C	V,T,Q,A,B,D,F	E, N	WIL
G311P813#1K0100%&	1,010.0	0.3	A, B, C	V,T,Q,A,B,D,F	E, N	WIL
G311P813#1K0200%&	1,020.0	0.3	A, B, C	V,T,Q,A,B,D,F	E, N	WIL
G311P813#1K0400%&	1,040.0	0.3	A, B, C	V,T,Q,A,B,D,F	E, N	WIL
G311P813#1K0500%&	1,050.0	0.3	A, B, C	V,T,Q,A,B,D,F	E, N	WIL
G311P813#1K0600%&	1,060.0	0.3	A, B, C	V,T,Q,A,B,D,F	E, N	WIL
G311P813#1K0700%&	1,070.0	0.3	A, B, C	V,T,Q,A,B,D,F	E, N	WIL
G311P813#1K0900%&	1,090.0	0.3	A, B, C	V,T,Q,A,B,D,F	E, N	WIL
G311P813#1K1000%&	1,100.0	0.3	A, B, C	V,T,Q,A,B,D,F	E, N	WIL
G311P813#1K1100%&	1,110.0	0.3	A, B, C	V,T,Q,A,B,D,F	E, N	WIL
G311P813#1K1300%&	1,130.0	0.3	A, B, C	V,T,Q,A,B,D,F	E, N	WIL
G311P813#1K1400%&	1,140.0	0.3	A, B, C	V,T,Q,A,B,D,F	E, N	WIL
G311P813#1K1500%&	1,150.0	0.3	A, B, C	V,T,Q,A,B,D,F	E, N	WIL
G311P813#1K1700%&	1,170.0	0.3	A, B, C	V,T,Q,A,B,D,F	E, N	WIL
	Resistance	Power	Temperature	Resistance	Performance	
Part Number	Value (Ohms)	Rating (W)	Characteristic (#)	Tolerance (%)	Processing (&)	Manufacturer
G311P813#1K1800%&	1,180.0	0.3	A, B, C	V,T,Q,A,B,D,F	E, N	WIL
G311P813#1K2000%&	1,200.0	0.3	A, B, C	V,T,Q,A,B,D,F	E, N	WIL
G311P813#1K2100%&	1,210.0	0.3	A, B, C	V,T,Q,A,B,D,F	E, N	WIL
G311P813#1K2300%&	1,230.0	0.3	A, B, C	V,T,Q,A,B,D,F	E, N	WIL
G311P813#1K2400%&	1,240.0	0.3	A, B, C	V,T,Q,A,B,D,F	E, N	WIL
G311P813#1K2600%&	1,260.0	0.3	A, B, C	V,T,Q,A,B,D,F	E, N	WIL
G311P813#1K2700%&	1,270.0	0.3	A, B, C	V,T,Q,A,B,D,F	E, N	WIL
G311P813#1K2900%&	1,290.0	0.3	A, B, C	V,T,Q,A,B,D,F	E, N	WIL
G311P813#1K3000%&	1,300.0	0.3	A, B, C	V,T,Q,A,B,D,F	E, N	WIL
G311P813#1K3200%&	1,320.0	0.3	A, B, C	V,T,Q,A,B,D,F	E, N	WIL
G311P813#1K3300%&	1,330.0	0.3	A, B, C	V,T,Q,A,B,D,F	E, N	WIL
G311P813#1K3500%&	1,350.0	0.3	A, B, C	V,T,Q,A,B,D,F	E, N	WIL
G311P813#1K3700%&	1,370.0	0.3	A, B, C	V,T,Q,A,B,D,F	E, N	WIL
G311P813#1K3800%&	1,380.0	0.3	A, B, C	V,T,Q,A,B,D,F	E, N	WIL
	Resistance	Power	Temperature	Resistance	Performance	
Part Number	Value (Ohms)	Rating (W)	Characteristic (#)	Tolerance (%)	Processing (&)	Manufacturer
G311P813#1K4000%&	1,400.0	0.3	A, B, C	V,T,Q,A,B,D,F	E, N	WIL
G311P813#1K4200%&	1,420.0	0.3	A, B, C	V,T,Q,A,B,D,F	E, N	WIL
G311P813#1K4300%&	1,430.0	0.3	A, B, C	V,T,Q,A,B,D,F	E, N	WIL
G311P813#1K4500%&	1,450.0	0.3	A, B, C	V,T,Q,A,B,D,F	E, N	WIL
G311P813#1K4700%&	1,470.0	0.3	A, B, C	V,T,Q,A,B,D,F	E, N	WIL
G311P813#1K4900%&	1,490.0	0.3	A, B, C	V,T,Q,A,B,D,F	E, N	WIL
G311P813#1K5000%&	1,500.0	0.3	A, B, C	V,T,Q,A,B,D,F	E, N	WIL
G311P813#1K5200%&	1,520.0	0.3	A, B, C	V,T,Q,A,B,D,F	E, N	WIL
G311P813#1K5400%&	1,540.0	0.3	A, B, C	V,T,Q,A,B,D,F	E, N	WIL
G311P813#1K5600%&	1,560.0	0.3	A, B, C	V,T,Q,A,B,D,F	E, N	WIL
G311P813#1K5800%&	1,580.0	0.3	A, B, C	V,T,Q,A,B,D,F	E, N	WIL
G311P813#1K6000%&	1,600.0	0.3	A, B, C	V,T,Q,A,B,D,F	E, N	WIL
G311P813#1K6200%&	1,620.0	0.3	A, B, C	V,T,Q,A,B,D,F	E, N	WIL

G311P813#1K6400%&	1,640.0	0.3	A, B, C	V,T,Q,A,B,D,F	E, N	WIL
	Resistance	Power	Temperature	Resistance	Performance	
Part Number	Value (Ohms)	Rating (W)	Characteristic (#)	Tolerance (%)	Processing (&)	Manufacturer
G311P813#1K6500%&	1,650.0	0.3	A, B, C	V,T,Q,A,B,D,F	E, N	WIL
G311P813#1K6700%&	1,670.0	0.3	A, B, C	V,T,Q,A,B,D,F	E, N	WIL
G311P813#1K6900%&	1,690.0	0.3	A, B, C	V,T,Q,A,B,D,F	E, N	WIL
G311P813#1K7200%&	1,720.0	0.3	A, B, C	V,T,Q,A,B,D,F	E, N	WIL
G311P813#1K7400%&	1,740.0	0.3	A, B, C	V,T,Q,A,B,D,F	E, N	WIL
G311P813#1K7600%&	1,760.0	0.3	A, B, C	V,T,Q,A,B,D,F	E, N	WIL
G311P813#1K7800%&	1,780.0	0.3	A, B, C	V,T,Q,A,B,D,F	E, N	WIL
G311P813#1K8000%&	1,800.0	0.3	A, B, C	V,T,Q,A,B,D,F	E, N	WIL
G311P813#1K8200%&	1,820.0	0.3	A, B, C	V,T,Q,A,B,D,F	E, N	WIL
G311P813#1K8400%&	1,840.0	0.3	A, B, C	V,T,Q,A,B,D,F	E, N	WIL
G311P813#1K8700%&	1,870.0	0.3	A, B, C	V,T,Q,A,B,D,F	E, N	WIL
G311P813#1K8900%&	1,890.0	0.3	A, B, C	V,T,Q,A,B,D,F	E, N	WIL
G311P813#1K9100%&	1,910.0	0.3	A, B, C	V,T,Q,A,B,D,F	E, N	WIL
G311P813#1K9300%&	1,930.0	0.3	A, B, C	V,T,Q,A,B,D,F	E, N	WIL
	Resistance	Power	Temperature	Resistance	Performance	
Part Number	Value (Ohms)	Rating (W)	Characteristic (#)	Tolerance (%)	Processing (&)	Manufacturer
G311P813#1K9600%&	1,960.0	0.3	A, B, C	V,T,Q,A,B,D,F	E, N	WIL
G311P813#1K9800%&	1,980.0	0.3	A, B, C	V,T,Q,A,B,D,F	E, N	WIL
G311P813#2K0000%&	2,000.0	0.3	A, B, C	V,T,Q,A,B,D,F	E, N	WIL
G311P813#2K0300%&	2,030.0	0.3	A, B, C	V,T,Q,A,B,D,F	E, N	WIL
G311P813#2K0500%&	2,050.0	0.3	A, B, C	V,T,Q,A,B,D,F	E, N	WIL
G311P813#2K0800%&	2,080.0	0.3	A, B, C	V,T,Q,A,B,D,F	E, N	WIL
G311P813#2K1000%&	2,100.0	0.3	A, B, C	V,T,Q,A,B,D,F	E, N	WIL
G311P813#2K1300%&	2,130.0	0.3	A, B, C	V,T,Q,A,B,D,F	E, N	WIL
G311P813#2K1500%&	2,150.0	0.3	A, B, C	V,T,Q,A,B,D,F	E, N	WIL
G311P813#2K1800%&	2,180.0	0.3	A, B, C	V,T,Q,A,B,D,F	E, N	WIL
G311P813#2K2100%&	2,210.0	0.3	A, B, C	V,T,Q,A,B,D,F	E, N	WIL
G311P813#2K2300%&	2,230.0	0.3	A, B, C	V,T,Q,A,B,D,F	E, N	WIL
G311P813#2K2600%&	2,260.0	0.3	A, B, C	V,T,Q,A,B,D,F	E, N	WIL
G311P813#2K2900%&	2,290.0	0.3	A, B, C	V,T,Q,A,B,D,F	E, N	WIL
	Resistance	Power	Temperature	Resistance	Performance	
Part Number	Value (Ohms)	Rating (W)	Characteristic (#)	Tolerance (%)	Processing (&)	Manufacturer
G311P813#2K3200%&	2,320.0	0.3	A, B, C	V,T,Q,A,B,D,F	E, N	WIL
G311P813#2K3400%&	2,340.0	0.3	A, B, C	V,T,Q,A,B,D,F	E, N	WIL
G311P813#2K3700%&	2,370.0	0.3	A, B, C	V,T,Q,A,B,D,F	E, N	WIL
G311P813#2K4000%&	2,400.0	0.3	A, B, C	V,T,Q,A,B,D,F	E, N	WIL
G311P813#2K4300%&	2,430.0	0.3	A, B, C	V,T,Q,A,B,D,F	E, N	WIL
G311P813#2K4600%&	2,460.0	0.3	A, B, C	V,T,Q,A,B,D,F	E, N	WIL
G311P813#2K4900%&	2,490.0	0.3	A, B, C	V,T,Q,A,B,D,F	E, N	WIL
G311P813#2K5200%&	2,520.0	0.3	A, B, C	V,T,Q,A,B,D,F	E, N	WIL
G311P813#2K5500%&	2,550.0	0.3	A, B, C	V,T,Q,A,B,D,F	E, N	WIL
G311P813#2K5800%&	2,580.0	0.3	A, B, C	V,T,Q,A,B,D,F	E, N	WIL
G311P813#2K6100%&	2,610.0	0.3	A, B, C	V,T,Q,A,B,D,F	E, N	WIL
G311P813#2K6400%&	2,640.0	0.3	A, B, C	V,T,Q,A,B,D,F	E, N	WIL

G311P813#2K6700%&	2,670.0	0.3	A, B, C	V,T,Q,A,B,D,F	E, N	WIL
G311P813#2K7100%&	2,710.0	0.3	A, B, C	V,T,Q,A,B,D,F	E, N	WIL
	Resistance	Power	Temperature	Resistance	Performance	
Part Number	Value (Ohms)	Rating (W)	Characteristic (#)	Tolerance (%)	Processing (&)	Manufacturer
G311P813#2K7400%&	2,740.0	0.3	A, B, C	V,T,Q,A,B,D,F	E, N	WIL
G311P813#2K7700%&	2,770.0	0.3	A, B, C	V,T,Q,A,B,D,F	E, N	WIL
G311P813#2K8000%&	2,800.0	0.3	A, B, C	V,T,Q,A,B,D,F	E, N	WIL
G311P813#2K8400%&	2,840.0	0.3	A, B, C	V,T,Q,A,B,D,F	E, N	WIL
G311P813#2K8700%&	2,870.0	0.3	A, B, C	V,T,Q,A,B,D,F	E, N	WIL
G311P813#2K9100%&	2,910.0	0.3	A, B, C	V,T,Q,A,B,D,F	E, N	WIL
G311P813#2K9400%&	2,940.0	0.3	A, B, C	V,T,Q,A,B,D,F	E, N	WIL
G311P813#2K9800%&	2,980.0	0.3	A, B, C	V,T,Q,A,B,D,F	E, N	WIL
G311P813#3K0100%&	3,010.0	0.3	A, B, C	V,T,Q,A,B,D,F	E, N	WIL
G311P813#3K0500%&	3,050.0	0.3	A, B, C	V,T,Q,A,B,D,F	E, N	WIL
G311P813#3K0900%&	3,090.0	0.3	A, B, C	V,T,Q,A,B,D,F	E, N	WIL
G311P813#3K1200%&	3,120.0	0.3	A, B, C	V,T,Q,A,B,D,F	E, N	WIL
G311P813#3K1600%&	3,160.0	0.3	A, B, C	V,T,Q,A,B,D,F	E, N	WIL
G311P813#3K2000%&	3,200.0	0.3	A, B, C	V,T,Q,A,B,D,F	E, N	WIL
	Resistance	Power	Temperature	Resistance	Performance	
Part Number	Value (Ohms)	Rating (W)	Characteristic (#)	Tolerance (%)	Processing (&)	Manufacturer
G311P813#3K2400%&	3,240.0	0.3	A, B, C	V,T,Q,A,B,D,F	E, N	WIL
G311P813#3K2800%&	3,280.0	0.3	A, B, C	V,T,Q,A,B,D,F	E, N	WIL
G311P813#3K3200%&	3,320.0	0.3	A, B, C	V,T,Q,A,B,D,F	E, N	WIL
G311P813#3K3600%&	3,360.0	0.3	A, B, C	V,T,Q,A,B,D,F	E, N	WIL
G311P813#3K4000%&	3,400.0	0.3	A, B, C	V,T,Q,A,B,D,F	E, N	WIL
G311P813#3K4400%&	3,440.0	0.3	A, B, C	V,T,Q,A,B,D,F	E, N	WIL
G311P813#3K4800%&	3,480.0	0.3	A, B, C	V,T,Q,A,B,D,F	E, N	WIL
G311P813#3K5200%&	3,520.0	0.3	A, B, C	V,T,Q,A,B,D,F	E, N	WIL
G311P813#3K5700%&	3,570.0	0.3	A, B, C	V,T,Q,A,B,D,F	E, N	WIL
G311P813#3K6100%&	3,610.0	0.3	A, B, C	V,T,Q,A,B,D,F	E, N	WIL
G311P813#3K6500%&	3,650.0	0.3	A, B, C	V,T,Q,A,B,D,F	E, N	WIL
G311P813#3K7000%&	3,700.0	0.3	A, B, C	V,T,Q,A,B,D,F	E, N	WIL
G311P813#3K7400%&	3,740.0	0.3	A, B, C	V,T,Q,A,B,D,F	E, N	WIL
G311P813#3K7900%&	3,790.0	0.3	A, B, C	V,T,Q,A,B,D,F	E, N	WIL
	Resistance	Power	Temperature	Resistance	Performance	
Part Number	Value (Ohms)	Rating (W)	Characteristic (#)	Tolerance (%)	Processing (&)	Manufacturer
G311P813#3K8300%&	3,830.0	0.3	A, B, C	V,T,Q,A,B,D,F	E, N	WIL
G311P813#3K8800%&	3,880.0	0.3	A, B, C	V,T,Q,A,B,D,F	E, N	WIL
G311P813#3K9200%&	3,920.0	0.3	A, B, C	V,T,Q,A,B,D,F	E, N	WIL
G311P813#3K9700%&	3,970.0	0.3	A, B, C	V,T,Q,A,B,D,F	E, N	WIL
G311P813#4K0200%&	4,020.0	0.3	A, B, C	V,T,Q,A,B,D,F	E, N	WIL
G311P813#4K0700%&	4,070.0	0.3	A, B, C	V,T,Q,A,B,D,F	E, N	WIL
G311P813#4K1200%&	4,120.0	0.3	A, B, C	V,T,Q,A,B,D,F	E, N	WIL
G311P813#4K1700%&	4,170.0	0.3	A, B, C	V,T,Q,A,B,D,F	E, N	WIL
G311P813#4K2200%&	4,220.0	0.3	A, B, C	V,T,Q,A,B,D,F	E, N	WIL
G311P813#4K2700%&	4,270.0	0.3	A, B, C	V,T,Q,A,B,D,F	E, N	WIL
G311P813#4K3200%&	4,320.0	0.3	A, B, C	V,T,Q,A,B,D,F	E, N	WIL

G311P813#4K3700%&	4,370.0	0.3	A, B, C	V,T,Q,A,B,D,F	E, N	WIL
G311P813#4K4200%&	4,420.0	0.3	A, B, C	V,T,Q,A,B,D,F	E, N	WIL
G311P813#4K4800%&	4,480.0	0.3	A, B, C	V,T,Q,A,B,D,F	E, N	WIL
	Resistance	Power	Temperature	Resistance	Performance	
Part Number	Value (Ohms)	Rating (W)	Characteristic (#)	Tolerance (%)	Processing (&)	Manufacturer
G311P813#4K5300%&	4,530.0	0.3	A, B, C	V,T,Q,A,B,D,F	E, N	WIL
G311P813#4K5900%&	4,590.0	0.3	A, B, C	V,T,Q,A,B,D,F	E, N	WIL
G311P813#4K6400%&	4,640.0	0.3	A, B, C	V,T,Q,A,B,D,F	E, N	WIL
G311P813#4K7000%&	4,700.0	0.3	A, B, C	V,T,Q,A,B,D,F	E, N	WIL
G311P813#4K7500%&	4,750.0	0.3	A, B, C	V,T,Q,A,B,D,F	E, N	WIL
G311P813#4K8100%&	4,810.0	0.3	A, B, C	V,T,Q,A,B,D,F	E, N	WIL
G311P813#4K8700%&	4,870.0	0.3	A, B, C	V,T,Q,A,B,D,F	E, N	WIL
G311P813#4K9300%&	4,930.0	0.3	A, B, C	V,T,Q,A,B,D,F	E, N	WIL
G311P813#4K9900%&	4,990.0	0.3	A, B, C	V,T,Q,A,B,D,F	E, N	WIL
G311P813#5K0500%&	5,050.0	0.3	A, B, C	V,T,Q,A,B,D,F	E, N	WIL
G311P813#5K1100%&	5,110.0	0.3	A, B, C	V,T,Q,A,B,D,F	E, N	WIL
G311P813#5K1700%&	5,170.0	0.3	A, B, C	V,T,Q,A,B,D,F	E, N	WIL
G311P813#5K2300%&	5,230.0	0.3	A, B, C	V,T,Q,A,B,D,F	E, N	WIL
G311P813#5K3000%&	5,300.0	0.3	A, B, C	V,T,Q,A,B,D,F	E, N	WIL
	Resistance	Power	Temperature	Resistance	Performance	
Part Number	Value (Ohms)	Rating (W)	Characteristic (#)	Tolerance (%)	Processing (&)	Manufacturer
G311P813#5K3600%&	5,360.0	0.3	A, B, C	V,T,Q,A,B,D,F	E, N	WIL
G311P813#5K4200%&	5,420.0	0.3	A, B, C	V,T,Q,A,B,D,F	E, N	WIL
G311P813#5K4900%&	5,490.0	0.3	A, B, C	V,T,Q,A,B,D,F	E, N	WIL
G311P813#5K5600%&	5,560.0	0.3	A, B, C	V,T,Q,A,B,D,F	E, N	WIL
G311P813#5K6200%&	5,620.0	0.3	A, B, C	V,T,Q,A,B,D,F	E, N	WIL
G311P813#5K6900%&	5,690.0	0.3	A, B, C	V,T,Q,A,B,D,F	E, N	WIL
G311P813#5K7600%&	5,760.0	0.3	A, B, C	V,T,Q,A,B,D,F	E, N	WIL
G311P813#5K8300%&	5,830.0	0.3	A, B, C	V,T,Q,A,B,D,F	E, N	WIL
G311P813#5K9000%&	5,900.0	0.3	A, B, C	V,T,Q,A,B,D,F	E, N	WIL
G311P813#5K9700%&	5,970.0	0.3	A, B, C	V,T,Q,A,B,D,F	E, N	WIL
G311P813#6K0400%&	6,040.0	0.3	A, B, C	V,T,Q,A,B,D,F	E, N	WIL
G311P813#6K1200%&	6,120.0	0.3	A, B, C	V,T,Q,A,B,D,F	E, N	WIL
G311P813#6K1900%&	6,190.0	0.3	A, B, C	V,T,Q,A,B,D,F	E, N	WIL
G311P813#6K2600%&	6,260.0	0.3	A, B, C	V,T,Q,A,B,D,F	E, N	WIL
	Resistance	Power	Temperature	Resistance	Performance	
Part Number	Value (Ohms)	Rating (W)	Characteristic (#)	Tolerance (%)	Processing (&)	Manufacturer
G311P813#6K3400%&	6,340.0	0.3	A, B, C	V,T,Q,A,B,D,F	E, N	WIL
G311P813#6K4200%&	6,420.0	0.3	A, B, C	V,T,Q,A,B,D,F	E, N	WIL
G311P813#6K4900%&	6,490.0	0.3	A, B, C	V,T,Q,A,B,D,F	E, N	WIL
G311P813#6K5700%&	6,570.0	0.3	A, B, C	V,T,Q,A,B,D,F	E, N	WIL
G311P813#6K6500%&	6,650.0	0.3	A, B, C	V,T,Q,A,B,D,F	E, N	WIL
G311P813#6K7300%&	6,730.0	0.3	A, B, C	V,T,Q,A,B,D,F	E, N	WIL
G311P813#6K8100%&	6,810.0	0.3	A, B, C	V,T,Q,A,B,D,F	E, N	WIL
G311P813#6K9000%&	6,900.0	0.3	A, B, C	V,T,Q,A,B,D,F	E, N	WIL
G311P813#6K9800%&	6,980.0	0.3	A, B, C	V,T,Q,A,B,D,F	E, N	WIL
G311P813#7K0600%&	7,060.0	0.3	A, B, C	V,T,Q,A,B,D,F	E, N	WIL

G311P813#7K1500%&	7,150.0	0.3	A, B, C	V,T,Q,A,B,D,F	E, N	WIL
G311P813#7K2300%&	7,230.0	0.3	A, B, C	V,T,Q,A,B,D,F	E, N	WIL
G311P813#7K3200%&	7,320.0	0.3	A, B, C	V,T,Q,A,B,D,F	E, N	WIL
G311P813#7K4100%&	7,410.0	0.3	A, B, C	V,T,Q,A,B,D,F	E, N	WIL
	Resistance	Power	Temperature	Resistance	Performance	
Part Number	Value (Ohms)	Rating (W)	Characteristic (#)	Tolerance (%)	Processing (&)	Manufacturer
G311P813#7K5000%&	7,500.0	0.3	A, B, C	V,T,Q,A,B,D,F	E, N	WIL
G311P813#7K5900%&	7,590.0	0.3	A, B, C	V,T,Q,A,B,D,F	E, N	WIL
G311P813#7K6800%&	7,680.0	0.3	A, B, C	V,T,Q,A,B,D,F	E, N	WIL
G311P813#7K7700%&	7,770.0	0.3	A, B, C	V,T,Q,A,B,D,F	E, N	WIL
G311P813#7K8700%&	7,870.0	0.3	A, B, C	V,T,Q,A,B,D,F	E, N	WIL
G311P813#7K9600%&	7,960.0	0.3	A, B, C	V,T,Q,A,B,D,F	E, N	WIL
G311P813#8K0600%&	8,060.0	0.3	A, B, C	V,T,Q,A,B,D,F	E, N	WIL
G311P813#8K1600%&	8,160.0	0.3	A, B, C	V,T,Q,A,B,D,F	E, N	WIL
G311P813#8K2500%&	8,250.0	0.3	A, B, C	V,T,Q,A,B,D,F	E, N	WIL
G311P813#8K3500%&	8,350.0	0.3	A, B, C	V,T,Q,A,B,D,F	E, N	WIL
G311P813#8K4500%&	8,450.0	0.3	A, B, C	V,T,Q,A,B,D,F	E, N	WIL
G311P813#8K5600%&	8,560.0	0.3	A, B, C	V,T,Q,A,B,D,F	E, N	WIL
G311P813#8K6600%&	8,660.0	0.3	A, B, C	V,T,Q,A,B,D,F	E, N	WIL
G311P813#8K7600%&	8,760.0	0.3	A, B, C	V,T,Q,A,B,D,F	E, N	WIL
	Resistance	Power	Temperature	Resistance	Performance	
Part Number	Value (Ohms)	Rating (W)	Characteristic (#)	Tolerance (%)	Processing (&)	Manufacturer
G311P813#8K8700%&	8,870.0	0.3	A, B, C	V,T,Q,A,B,D,F	E, N	WIL
G311P813#8K9800%&	8,980.0	0.3	A, B, C	V,T,Q,A,B,D,F	E, N	WIL
G311P813#9K0900%&	9,090.0	0.3	A, B, C	V,T,Q,A,B,D,F	E, N	WIL
G311P813#9K2000%&	9,200.0	0.3	A, B, C	V,T,Q,A,B,D,F	E, N	WIL
G311P813#9K3100%&	9,310.0	0.3	A, B, C	V,T,Q,A,B,D,F	E, N	WIL
G311P813#9K4200%&	9,420.0	0.3	A, B, C	V,T,Q,A,B,D,F	E, N	WIL
G311P813#9K5300%&	9,530.0	0.3	A, B, C	V,T,Q,A,B,D,F	E, N	WIL
G311P813#9K6500%&	9,650.0	0.3	A, B, C	V,T,Q,A,B,D,F	E, N	WIL
G311P813#9K7600%&	9,760.0	0.3	A, B, C	V,T,Q,A,B,D,F	E, N	WIL
G311P813#9K8800%&	9,880.0	0.3	A, B, C	V,T,Q,A,B,D,F	E, N	WIL
	Resistance	Power	Temperature	Resistance	Performance	
Part Number	Value (Ohms)	Rating (W)	Characteristic (#)	Tolerance (%)	Processing (&)	Manufacturer

S-311-P-813 Precision Resistors: 10,000 Ohms through 100,000 Ohms

	Resistance	Power	Temperature	Resistance	Performance	
Part Number	Value (Ohms)	Rating (W)	Characteristic (#)	Tolerance (%)	Processing (&)	Manufacturer
G311P813#10K000%&	10,000	0.3	B, C, D	V,T,Q,A,B,D,F	E, N	WIL
G311P813#10K100%&	10,100	0.3	B, C, D	V,T,Q,A,B,D,F	E, N	WIL
G311P813#10K200%&	10,200	0.3	B, C, D	V,T,Q,A,B,D,F	E, N	WIL
G311P813#10K400%&	10,400	0.3	B, C, D	V,T,Q,A,B,D,F	E, N	WIL
G311P813#10K500%&	10,500	0.3	B, C, D	V,T,Q,A,B,D,F	E, N	WIL
G311P813#10K600%&	10,600	0.3	B, C, D	V,T,Q,A,B,D,F	E, N	WIL

G311P813#10K700%&	10,700	0.3	B, C, D	V,T,Q,A,B,D,F	E, N	WIL
G311P813#10K900%&	10,900	0.3	B, C, D	V,T,Q,A,B,D,F	E, N	WIL
G311P813#11K000%&	11,000	0.3	B, C, D	V,T,Q,A,B,D,F	E, N	WIL
G311P813#11K100%&	11,100	0.3	B, C, D	V,T,Q,A,B,D,F	E, N	WIL
G311P813#11K300%&	11,300	0.3	B, C, D	V,T,Q,A,B,D,F	E, N	WIL
G311P813#11K400%&	11,400	0.3	B, C, D	V,T,Q,A,B,D,F	E, N	WIL
G311P813#11K500%&	11,500	0.3	B, C, D	V,T,Q,A,B,D,F	E, N	WIL
G311P813#11K700%&	11,700	0.3	B, C, D	V,T,Q,A,B,D,F	E, N	WIL
	Resistance	Power	Temperature	Resistance	Performance	
Part Number	Value (Ohms)	Rating (W)	Characteristic (#)	Tolerance (%)	Processing (&)	Manufacturer
G311P813#11K800%&	11,800	0.3	B, C, D	V,T,Q,A,B,D,F	E, N	WIL
G311P813#12K000%&	12,000	0.3	B, C, D	V,T,Q,A,B,D,F	E, N	WIL
G311P813#12K100%&	12,100	0.3	B, C, D	V,T,Q,A,B,D,F	E, N	WIL
G311P813#12K300%&	12,300	0.3	B, C, D	V,T,Q,A,B,D,F	E, N	WIL
G311P813#12K400%&	12,400	0.3	B, C, D	V,T,Q,A,B,D,F	E, N	WIL
G311P813#12K600%&	12,600	0.3	B, C, D	V,T,Q,A,B,D,F	E, N	WIL
G311P813#12K700%&	12,700	0.3	B, C, D	V,T,Q,A,B,D,F	E, N	WIL
G311P813#12K900%&	12,900	0.3	B, C, D	V,T,Q,A,B,D,F	E, N	WIL
G311P813#13K000%&	13,000	0.3	B, C, D	V,T,Q,A,B,D,F	E, N	WIL
G311P813#13K200%&	13,200	0.3	B, C, D	V,T,Q,A,B,D,F	E, N	WIL
G311P813#13K300%&	13,300	0.3	B, C, D	V,T,Q,A,B,D,F	E, N	WIL
G311P813#13K500%&	13,500	0.3	B, C, D	V,T,Q,A,B,D,F	E, N	WIL
G311P813#13K700%&	13,700	0.3	B, C, D	V,T,Q,A,B,D,F	E, N	WIL
G311P813#13K800%&	13,800	0.3	B, C, D	V,T,Q,A,B,D,F	E, N	WIL
	Resistance	Power	Temperature	Resistance	Performance	
Part Number	Value (Ohms)	Rating (W)	Characteristic (#)	Tolerance (%)	Processing (&)	Manufacturer
G311P813#14K000%&	14,000	0.3	B, C, D	V,T,Q,A,B,D,F	E, N	WIL
G311P813#14K200%&	14,200	0.3	B, C, D	V,T,Q,A,B,D,F	E, N	WIL
G311P813#14K300%&	14,300	0.3	B, C, D	V,T,Q,A,B,D,F	E, N	WIL
G311P813#14K500%&	14,500	0.3	B, C, D	V,T,Q,A,B,D,F	E, N	WIL
G311P813#14K700%&	14,700	0.3	B, C, D	V,T,Q,A,B,D,F	E, N	WIL
G311P813#14K900%&	14,900	0.3	B, C, D	V,T,Q,A,B,D,F	E, N	WIL
G311P813#15K000%&	15,000	0.3	B, C, D	V,T,Q,A,B,D,F	E, N	WIL
G311P813#15K200%&	15,200	0.3	B, C, D	V,T,Q,A,B,D,F	E, N	WIL
G311P813#15K400%&	15,400	0.3	B, C, D	V,T,Q,A,B,D,F	E, N	WIL
G311P813#15K600%&	15,600	0.3	B, C, D	V,T,Q,A,B,D,F	E, N	WIL
G311P813#15K800%&	15,800	0.3	B, C, D	V,T,Q,A,B,D,F	E, N	WIL
G311P813#16K000%&	16,000	0.3	B, C, D	V,T,Q,A,B,D,F	E, N	WIL
G311P813#16K200%&	16,200	0.3	B, C, D	V,T,Q,A,B,D,F	E, N	WIL
G311P813#16K400%&	16,400	0.3	B, C, D	V,T,Q,A,B,D,F	E, N	WIL
	Resistance	Power	Temperature	Resistance	Performance	
Part Number	Value (Ohms)	Rating (W)	Characteristic (#)	Tolerance (%)	Processing (&)	Manufacturer
G311P813#16K500%&	16,500	0.3	B, C, D	V,T,Q,A,B,D,F	E, N	WIL
G311P813#16K700%&	16,700	0.3	B, C, D	V,T,Q,A,B,D,F	E, N	WIL
G311P813#16K900%&	16,900	0.3	B, C, D	V,T,Q,A,B,D,F	E, N	WIL
G311P813#17K200%&	17,200	0.3	B, C, D	V,T,Q,A,B,D,F	E, N	WIL
G311P813#17K400%&	17,400	0.3	B, C, D	V,T,Q,A,B,D,F	E, N	WIL

G311P813#17K600%&	17,600	0.3	B, C, D	V,T,Q,A,B,D,F	E, N	WIL
G311P813#17K800%&	17,800	0.3	B, C, D	V,T,Q,A,B,D,F	E, N	WIL
G311P813#18K000%&	18,000	0.3	B, C, D	V,T,Q,A,B,D,F	E, N	WIL
G311P813#18K200%&	18,200	0.3	B, C, D	V,T,Q,A,B,D,F	E, N	WIL
G311P813#18K400%&	18,400	0.3	B, C, D	V,T,Q,A,B,D,F	E, N	WIL
G311P813#18K700%&	18,700	0.3	B, C, D	V,T,Q,A,B,D,F	E, N	WIL
G311P813#18K900%&	18,900	0.3	B, C, D	V,T,Q,A,B,D,F	E, N	WIL
G311P813#19K100%&	19,100	0.3	B, C, D	V,T,Q,A,B,D,F	E, N	WIL
G311P813#19K300%&	19,300	0.3	B, C, D	V,T,Q,A,B,D,F	E, N	WIL
	Resistance	Power	Temperature	Resistance	Performance	
Part Number	Value (Ohms)	Rating (W)	Characteristic (#)	Tolerance (%)	Processing (&)	Manufacturer
G311P813#19K600%&	19,600	0.3	B, C, D	V,T,Q,A,B,D,F	E, N	WIL
G311P813#19K800%&	19,800	0.3	B, C, D	V,T,Q,A,B,D,F	E, N	WIL
G311P813#20K000%&	20,000	0.3	B, C, D	V,T,Q,A,B,D,F	E, N	WIL
G311P813#20K300%&	20,300	0.3	B, C, D	V,T,Q,A,B,D,F	E, N	WIL
G311P813#20K500%&	20,500	0.3	B, C, D	V,T,Q,A,B,D,F	E, N	WIL
G311P813#20K800%&	20,800	0.3	B, C, D	V,T,Q,A,B,D,F	E, N	WIL
G311P813#21K000%&	21,000	0.3	B, C, D	V,T,Q,A,B,D,F	E, N	WIL
G311P813#21K300%&	21,300	0.3	B, C, D	V,T,Q,A,B,D,F	E, N	WIL
G311P813#21K500%&	21,500	0.3	B, C, D	V,T,Q,A,B,D,F	E, N	WIL
G311P813#21K800%&	21,800	0.3	B, C, D	V,T,Q,A,B,D,F	E, N	WIL
G311P813#22K100%&	22,100	0.3	B, C, D	V,T,Q,A,B,D,F	E, N	WIL
G311P813#22K300%&	22,300	0.3	B, C, D	V,T,Q,A,B,D,F	E, N	WIL
G311P813#22K600%&	22,600	0.3	B, C, D	V,T,Q,A,B,D,F	E, N	WIL
G311P813#22K900%&	22,900	0.3	B, C, D	V,T,Q,A,B,D,F	E, N	WIL
	Resistance	Power	Temperature	Resistance	Performance	
Part Number	Value (Ohms)	Rating (W)	Characteristic (#)	Tolerance (%)	Processing (&)	Manufacturer
G311P813#23K200%&	23,200	0.3	B, C, D	V,T,Q,A,B,D,F	E, N	WIL
G311P813#23K400%&	23,400	0.3	B, C, D	V,T,Q,A,B,D,F	E, N	WIL
G311P813#23K700%&	23,700	0.3	B, C, D	V,T,Q,A,B,D,F	E, N	WIL
G311P813#24K000%&	24,000	0.3	B, C, D	V,T,Q,A,B,D,F	E, N	WIL
G311P813#24K300%&	24,300	0.3	B, C, D	V,T,Q,A,B,D,F	E, N	WIL
G311P813#24K600%&	24,600	0.3	B, C, D	V,T,Q,A,B,D,F	E, N	WIL
G311P813#24K900%&	24,900	0.3	B, C, D	V,T,Q,A,B,D,F	E, N	WIL
G311P813#25K200%&	25,200	0.3	B, C, D	V,T,Q,A,B,D,F	E, N	WIL
G311P813#25K500%&	25,500	0.3	B, C, D	V,T,Q,A,B,D,F	E, N	WIL
G311P813#25K800%&	25,800	0.3	B, C, D	V,T,Q,A,B,D,F	E, N	WIL
G311P813#26K100%&	26,100	0.3	B, C, D	V,T,Q,A,B,D,F	E, N	WIL
G311P813#26K400%&	26,400	0.3	B, C, D	V,T,Q,A,B,D,F	E, N	WIL
G311P813#26K700%&	26,700	0.3	B, C, D	V,T,Q,A,B,D,F	E, N	WIL
G311P813#27K100%&	27,100	0.3	B, C, D	V,T,Q,A,B,D,F	E, N	WIL
	Resistance	Power	Temperature	Resistance	Performance	
Part Number	Value (Ohms)	Rating (W)	Characteristic (#)	Tolerance (%)	Processing (&)	Manufacturer
G311P813#27K400%&	27,400	0.3	B, C, D	V,T,Q,A,B,D,F	E, N	WIL
G311P813#27K700%&	27,700	0.3	B, C, D	V,T,Q,A,B,D,F	E, N	WIL
G311P813#28K000%&	28,000	0.3	B, C, D	V,T,Q,A,B,D,F	E, N	WIL
G311P813#28K400%&	28,400	0.3	B, C, D	V,T,Q,A,B,D,F	E, N	WIL

G311P813#28K700%&	28,700	0.3	B, C, D	V,T,Q,A,B,D,F	E, N	WIL
G311P813#29K100%&	29,100	0.3	B, C, D	V,T,Q,A,B,D,F	E, N	WIL
G311P813#29K400%&	29,400	0.3	B, C, D	V,T,Q,A,B,D,F	E, N	WIL
G311P813#29K800%&	29,800	0.3	B, C, D	V,T,Q,A,B,D,F	E, N	WIL
G311P813#30K100%&	30,100	0.3	B, C, D	V,T,Q,A,B,D,F	E, N	WIL
G311P813#30K500%&	30,500	0.3	B, C, D	V,T,Q,A,B,D,F	E, N	WIL
G311P813#30K900%&	30,900	0.3	B, C, D	V,T,Q,A,B,D,F	E, N	WIL
G311P813#31K200%&	31,200	0.3	B, C, D	V,T,Q,A,B,D,F	E, N	WIL
G311P813#31K600%&	31,600	0.3	B, C, D	V,T,Q,A,B,D,F	E, N	WIL
G311P813#32K000%&	32,000	0.3	B, C, D	V,T,Q,A,B,D,F	E, N	WIL
	Resistance	Power	Temperature	Resistance	Performance	
Part Number	Value (Ohms)	Rating (W)	Characteristic (#)	Tolerance (%)	Processing (&)	Manufacturer
G311P813#32K400%&	32,400	0.3	B, C, D	V,T,Q,A,B,D,F	E, N	WIL
G311P813#32K800%&	32,800	0.3	B, C, D	V,T,Q,A,B,D,F	E, N	WIL
G311P813#33K200%&	33,200	0.3	B, C, D	V,T,Q,A,B,D,F	E, N	WIL
G311P813#33K600%&	33,600	0.3	B, C, D	V,T,Q,A,B,D,F	E, N	WIL
G311P813#34K000%&	34,000	0.3	B, C, D	V,T,Q,A,B,D,F	E, N	WIL
G311P813#34K400%&	34,400	0.3	B, C, D	V,T,Q,A,B,D,F	E, N	WIL
G311P813#34K800%&	34,800	0.3	B, C, D	V,T,Q,A,B,D,F	E, N	WIL
G311P813#35K200%&	35,200	0.3	B, C, D	V,T,Q,A,B,D,F	E, N	WIL
G311P813#35K700%&	35,700	0.3	B, C, D	V,T,Q,A,B,D,F	E, N	WIL
G311P813#36K100%&	36,100	0.3	B, C, D	V,T,Q,A,B,D,F	E, N	WIL
G311P813#36K500%&	36,500	0.3	B, C, D	V,T,Q,A,B,D,F	E, N	WIL
G311P813#37K000%&	37,000	0.3	B, C, D	V,T,Q,A,B,D,F	E, N	WIL
G311P813#37K400%&	37,400	0.3	B, C, D	V,T,Q,A,B,D,F	E, N	WIL
G311P813#37K900%&	37,900	0.3	B, C, D	V,T,Q,A,B,D,F	E, N	WIL
	Resistance	Power	Temperature	Resistance	Performance	
Part Number	Value (Ohms)	Rating (W)	Characteristic (#)	Tolerance (%)	Processing (&)	Manufacturer
G311P813#38K300%&	38,300	0.3	B, C, D	V,T,Q,A,B,D,F	E, N	WIL
G311P813#38K800%&	38,800	0.3	B, C, D	V,T,Q,A,B,D,F	E, N	WIL
G311P813#39K200%&	39,200	0.3	B, C, D	V,T,Q,A,B,D,F	E, N	WIL
G311P813#39K700%&	39,700	0.3	B, C, D	V,T,Q,A,B,D,F	E, N	WIL
G311P813#40K200%&	40,200	0.3	B, C, D	V,T,Q,A,B,D,F	E, N	WIL
G311P813#40K700%&	40,700	0.3	B, C, D	V,T,Q,A,B,D,F	E, N	WIL
G311P813#41K200%&	41,200	0.3	B, C, D	V,T,Q,A,B,D,F	E, N	WIL
G311P813#41K700%&	41,700	0.3	B, C, D	V,T,Q,A,B,D,F	E, N	WIL
G311P813#42K200%&	42,200	0.3	B, C, D	V,T,Q,A,B,D,F	E, N	WIL
G311P813#42K700%&	42,700	0.3	B, C, D	V,T,Q,A,B,D,F	E, N	WIL
G311P813#43K200%&	43,200	0.3	B, C, D	V,T,Q,A,B,D,F	E, N	WIL
G311P813#43K700%&	43,700	0.3	B, C, D	V,T,Q,A,B,D,F	E, N	WIL
G311P813#44K200%&	44,200	0.3	B, C, D	V,T,Q,A,B,D,F	E, N	WIL
G311P813#44K800%&	44,800	0.3	B, C, D	V,T,Q,A,B,D,F	E, N	WIL
	Resistance	Power	Temperature	Resistance	Performance	
Part Number	Value (Ohms)	Rating (W)	Characteristic (#)	Tolerance (%)	Processing (&)	Manufacturer
G311P813#45K300%&	45,300	0.3	B, C, D	V,T,Q,A,B,D,F	E, N	WIL
G311P813#45K900%&	45,900	0.3	B, C, D	V,T,Q,A,B,D,F	E, N	WIL
G311P813#46K400%&	46,400	0.3	B, C, D	V,T,Q,A,B,D,F	E, N	WIL

G311P813#47K000%&	47,000	0.3	B, C, D	V,T,Q,A,B,D,F	E, N	WIL
G311P813#47K500%&	47,500	0.3	B, C, D	V,T,Q,A,B,D,F	E, N	WIL
G311P813#48K100%&	48,100	0.3	B, C, D	V,T,Q,A,B,D,F	E, N	WIL
G311P813#48K700%&	48,700	0.3	B, C, D	V,T,Q,A,B,D,F	E, N	WIL
G311P813#49K300%&	49,300	0.3	B, C, D	V,T,Q,A,B,D,F	E, N	WIL
G311P813#49K900%&	49,900	0.3	B, C, D	V,T,Q,A,B,D,F	E, N	WIL
G311P813#50K500%&	50,500	0.3	B, C, D	V,T,Q,A,B,D,F	E, N	WIL
G311P813#51K100%&	51,100	0.3	B, C, D	V,T,Q,A,B,D,F	E, N	WIL
G311P813#51K700%&	51,700	0.3	B, C, D	V,T,Q,A,B,D,F	E, N	WIL
G311P813#52K300%&	52,300	0.3	B, C, D	V,T,Q,A,B,D,F	E, N	WIL
G311P813#53K000%&	53,000	0.3	B, C, D	V,T,Q,A,B,D,F	E, N	WIL
	Resistance	Power	Temperature	Resistance	Performance	
Part Number	Value (Ohms)	Rating (W)	Characteristic (#)	Tolerance (%)	Processing (&)	Manufacturer
G311P813#53K600%&	53,600	0.3	B, C, D	V,T,Q,A,B,D,F	E, N	WIL
G311P813#54K200%&	54,200	0.3	B, C, D	V,T,Q,A,B,D,F	E, N	WIL
G311P813#54K900%&	54,900	0.3	B, C, D	V,T,Q,A,B,D,F	E, N	WIL
G311P813#55K600%&	55,600	0.3	B, C, D	V,T,Q,A,B,D,F	E, N	WIL
G311P813#56K200%&	56,200	0.3	B, C, D	V,T,Q,A,B,D,F	E, N	WIL
G311P813#56K900%&	56,900	0.3	B, C, D	V,T,Q,A,B,D,F	E, N	WIL
G311P813#57K600%&	57,600	0.3	B, C, D	V,T,Q,A,B,D,F	E, N	WIL
G311P813#58K300%&	58,300	0.3	B, C, D	V,T,Q,A,B,D,F	E, N	WIL
G311P813#59K000%&	59,000	0.3	B, C, D	V,T,Q,A,B,D,F	E, N	WIL
G311P813#59K700%&	59,700	0.3	B, C, D	V,T,Q,A,B,D,F	E, N	WIL
G311P813#60K400%&	60,400	0.3	B, C, D	V,T,Q,A,B,D,F	E, N	WIL
G311P813#61K200%&	61,200	0.3	B, C, D	V,T,Q,A,B,D,F	E, N	WIL
G311P813#61K900%&	61,900	0.3	B, C, D	V,T,Q,A,B,D,F	E, N	WIL
G311P813#62K600%&	62,600	0.3	B, C, D	V,T,Q,A,B,D,F	E, N	WIL
	Resistance	Power	Temperature	Resistance	Performance	
Part Number	Value (Ohms)	Rating (W)	Characteristic (#)	Tolerance (%)	Processing (&)	Manufacturer
G311P813#63K400%&	63,400	0.3	B, C, D	V,T,Q,A,B,D,F	E, N	WIL
G311P813#64K200%&	64,200	0.3	B, C, D	V,T,Q,A,B,D,F	E, N	WIL
G311P813#64K900%&	64,900	0.3	B, C, D	V,T,Q,A,B,D,F	E, N	WIL
G311P813#65K700%&	65,700	0.3	B, C, D	V,T,Q,A,B,D,F	E, N	WIL
G311P813#66K500%&	66,500	0.3	B, C, D	V,T,Q,A,B,D,F	E, N	WIL
G311P813#67K300%&	67,300	0.3	B, C, D	V,T,Q,A,B,D,F	E, N	WIL
G311P813#68K100%&	68,100	0.3	B, C, D	V,T,Q,A,B,D,F	E, N	WIL
G311P813#69K000%&	69,000	0.3	B, C, D	V,T,Q,A,B,D,F	E, N	WIL
G311P813#69K800%&	69,800	0.3	B, C, D	V,T,Q,A,B,D,F	E, N	WIL
G311P813#70K600%&	70,600	0.3	B, C, D	V,T,Q,A,B,D,F	E, N	WIL
G311P813#71K500%&	71,500	0.3	B, C, D	V,T,Q,A,B,D,F	E, N	WIL
G311P813#72K300%&	72,300	0.3	B, C, D	V,T,Q,A,B,D,F	E, N	WIL
G311P813#73K200%&	73,200	0.3	B, C, D	V,T,Q,A,B,D,F	E, N	WIL
G311P813#74K100%&	74,100	0.3	B, C, D	V,T,Q,A,B,D,F	E, N	WIL
	Resistance	Power	Temperature	Resistance	Performance	
Part Number	Value (Ohms)	Rating (W)	Characteristic (#)	Tolerance (%)	Processing (&)	Manufacturer
G311P813#75K000%&	75,000	0.3	B, C, D	V,T,Q,A,B,D,F	E, N	WIL
G311P813#75K900%&	75,900	0.3	B, C, D	V,T,Q,A,B,D,F	E, N	WIL

G311P813#76K800%&	76,800	0.3	B, C, D	V,T,Q,A,B,D,F	E, N	WIL
G311P813#77K700%&	77,700	0.3	B, C, D	V,T,Q,A,B,D,F	E, N	WIL
G311P813#78K700%&	78,700	0.3	B, C, D	V,T,Q,A,B,D,F	E, N	WIL
G311P813#79K600%&	79,600	0.3	B, C, D	V,T,Q,A,B,D,F	E, N	WIL
G311P813#80K600%&	80,600	0.3	B, C, D	V,T,Q,A,B,D,F	E, N	WIL
G311P813#81K600%&	81,600	0.3	B, C, D	V,T,Q,A,B,D,F	E, N	WIL
G311P813#82K500%&	82,500	0.3	B, C, D	V,T,Q,A,B,D,F	E, N	WIL
G311P813#83K500%&	83,500	0.3	B, C, D	V,T,Q,A,B,D,F	E, N	WIL
G311P813#84K500%&	84,500	0.3	B, C, D	V,T,Q,A,B,D,F	E, N	WIL
G311P813#85K600%&	85,600	0.3	B, C, D	V,T,Q,A,B,D,F	E, N	WIL
G311P813#86K600%&	86,600	0.3	B, C, D	V,T,Q,A,B,D,F	E, N	WIL
G311P813#87K600%&	87,600	0.3	B, C, D	V,T,Q,A,B,D,F	E, N	WIL
	Resistance	Power	Temperature	Resistance	Performance	
Part Number	Value (Ohms)	Rating (W)	Characteristic (#)	Tolerance (%)	Processing (&)	Manufacturer
G311P813#88K700%&	88,700	0.3	B, C, D	V,T,Q,A,B,D,F	E, N	WIL
G311P813#89K800%&	89,800	0.3	B, C, D	V,T,Q,A,B,D,F	E, N	WIL
G311P813#90K900%&	90,900	0.3	B, C, D	V,T,Q,A,B,D,F	E, N	WIL
G311P813#92K000%&	92,000	0.3	B, C, D	V,T,Q,A,B,D,F	E, N	WIL
G311P813#93K100%&	93,100	0.3	B, C, D	V,T,Q,A,B,D,F	E, N	WIL
G311P813#94K200%&	94,200	0.3	B, C, D	V,T,Q,A,B,D,F	E, N	WIL
G311P813#95K300%&	95,300	0.3	B, C, D	V,T,Q,A,B,D,F	E, N	WIL
G311P813#96K500%&	96,500	0.3	B, C, D	V,T,Q,A,B,D,F	E, N	WIL
G311P813#97K600%&	97,600	0.3	B, C, D	V,T,Q,A,B,D,F	E, N	WIL
G311P813#98K800%&	98,800	0.3	B, C, D	V,T,Q,A,B,D,F	E, N	WIL
G311P813#100K00%&	100,000	0.3	B, C, D	V,T,Q,A,B,D,F	E, N	WIL
	Resistance	Power	Temperature	Resistance	Performance	
Part Number	Value (Ohms)	Rating (W)	Characteristic (#)	Tolerance (%)	Processing (&)	Manufacturer

Click on the link below to see the associated parts selection listing:

Resistance Range
1.0000 Ohms through 9.8800 Ohms
10.000 Ohms through 98.800 Ohms
100.00 Ohms through 988.00 Ohms
1,000.0 Ohms through 9,880.0 Ohms
10,000 Ohms through 100,000 Ohms

Resistor Manufacturer Listing

And Links to Manufacturer Homepages

Click

here

for detailed information regarding part technologies offered by manufacturers listed in the

PSAP

Core Suppliers List

Listed below are links to manufacturer data sites that may provide additional part related information. The linked sites are not under the control of NPSL and NASA is not responsible for information contained in the linked site. We are providing these links for your convenience only.

ANG

Angstrohm, A Vishay Company

18400 Precision Place

Hagerstown, MD 21742

(301) 739-8722

CAGE Code: 17745

BRN

Bourns, Inc. Trimpot Division

1200 Columbia Avenue

Riverside, CA 92507

(909)-781-5500

CAGE Code: 32997

CAD

Caddock Electronics

1717 Chicago Avenue

Riverside, CA 92507

(714) 788-1700

CAGE Code: 19647

DAL

Dale Electronics

1122 23rd Street P.O. Box 609

Columbus, NE 68601-3632

(402) 563-6449

CAGE Code: 91637

DAL

Dale Electronics Inc., A Vishay Company

7803 Lemona Avenue

Van Nuys, CA 91405

(818) 781-1642

CAGE Code: 17826

IRC

International Resistive Co. Inc. (IRC)

Greenway Road P.O Box 1860

Boone, NC 28607

(704) 264-8861

CAGE Code: 11502

IRC

International Resistive Co. Inc. (IRC)

4222 S. Staples
Corpus Christi, TX 78411-2702
(512) 992-7900
CAGE Code: 57027
MSI
Mini-Systems Inc.
20 David Road
North Attleboro, MA 02761
(508) 695-0203
CAGE Code: 50316
OHM
Ohmtek Inc., A Vishay Company
2160 Liberty Drive
Niagara Fall, NY
(716) 283-4025
CAGE Code: 57489
SHA
Shallcross Inc., An IRC Company
U.S. 70 East
Smithfield, NC 27577
(919) 934-5181
CAGE Code: 54294
SOA
State of the Art
2470 Fox Hill Road
State College, PA 16801
(814) 355-8004
CAGE Code: 56235
TEP
Tepro of Florida
P.O. Box 1260
Clearwater, FL 33617
(813) 796-1044
CAGE Code: 15915
ULT
Ultronix Inc., A Vishay Company
461 North 22nd Street
Grand Junction, CO 05347
(303) 242-0810
CAGE Code: 05347

VAM
Vamistor Corporation
144 River Bend Drive
Sevierville, TN 37862
(615) 453-0001
CAGE Code: 56856
VIC
Victoreen
6000 Cochran Road
Cleveland, OH 44139-3395
(216) 248-9300
CAGE Code: 63060
VIS
Vishay Resistive Systems
63 Lincoln Highway
Malvern, PA 19355
(610) 644-1300
CAGE Code: 18612

Transistors

Thermistors

Wire and Cable

NASA Parts Selection List

Resistors

The following basic resistor types are available for selection:

Film	MIL-PRF-39017	RLR	MIL-PRF-55182	RNC/RNR	MIL-PRF-55342	RM	GSFC S-311-P-742	G311P742	GSFC S-311-P-813	G311P813	Network	MIL-
Wirewound	MIL-PRF-39005	RBR	MIL-PRF-39007	RWR	MIL-PRF-39009	RER	MIL-PRF-39015	RTR			High Voltage	

Composition

(No longer available from military sources)

Parts

|

Packaging

|

Radiation

|

Publications

|

Calendar

|

Experts

Admin Login

|

Request Account

|

Feedback

|

Site Map

|

Help

|

Search

NEPP Program Manager:

Chuck Barnes, Jet Propulsion Laboratory

Responsible NASA Official:

Michael Sampson, NEPAG Manager

Website Comments:

Web Development Team

Last Modified:

August 8, 2001

AETD IT Security Banner

NASA Privacy Statement

Wirewound Resistor Manufacturer Listing

Click

here

for detailed information regarding part technologies offered by manufacturers listed in the

PSAP

Core Suppliers List

Listed below are links to manufacturer data sites that may provide additional part related information. The linked sites are not under the control of NPSL and NASA is not responsible for information contained in the linked site. We are providing these links for your convenience only.

BRN

Bourns, Inc. Trimpot Division

1200 Columbia Avenue

Riverside, CA 92507

(909)-781-5500

CAGE Code: 32997

DAL

Dale Electronics

1122 23rd Street P.O. Box 609

Columbus, NE 68601-3632

(402) 563-6449

CAGE Code: 91637

SHA

Shallcross Inc., An IRC Company

U.S. 70 East

Smithfield, NC 27577

(919) 934-5181

CAGE Code: 54294

TEP

Tepro of Florida

P.O. Box 1260

Clearwater, FL 33617

(813) 796-1044

CAGE Code: 15915

ULT

Ultronix Inc., A Vishay Company

461 North 22nd Street

Grand Junction, CO 05347

(303) 242-0810

CAGE Code: 05347

NASA Parts Selection List (NPSL)

NOTE: Unless specifically stated within the parts selection tables of the NPSL, listing of a device technology herein does NOT imply/guarantee Radiation Hardness Assurance (RHA). Applications concerned with a device's ability to tolerate exposure to various forms of space radiation (e.g., total ionizing dose, single event effects, etc.) should be reviewed and have the device assessed by the Program's radiation assurance experts. The following resources may also be consulted for initial guidance:

NASA Goddard Radiation Effects and Analysis

Jet Propulsion Laboratory Radiation Effects

SUMMARY OF SEMICONDUCTORS

Specification	Description	Type
MIL-PRF-19500	Diodes	Diode, Silicon
MIL-PRF-19500	Transistors	Transistor, Silicon
NASDA-QTS-19500A	Diodes	General Information
NASDA-QTS-19500A	Transistors	General Information

NOTE:

The activity responsible for the MIL-PRF-19500 qualified parts is the Defense Supply Center Columbus (DSCC).

The activity responsible for the QTS-19500A qualified parts is the NAtional Space Development Agency of Japan (NASDA)

.

Parts

|

Packaging

|

Radiation

|

Publications

|

Calendar

|

Experts

Admin Login

|

Request Account

|

Feedback

|

Site Map

|

Help

|

Search

NEPP Program Manager:

Chuck Barnes, Jet Propulsion Laboratory

Responsible NASA Official:

Michael Sampson, NEPAG Manager

Website Comments:

Web Development Team

Last Modified:

August 8, 2001

AETD IT Security Banner

NASA Privacy Statement

About NPSL
Prohibited Materials
Parts Selection Table of Contents
Capacitors
Circuit Protection Devices
Fuses
Connectors
Filters
Inductors
Microcircuits
NEW!
Monolithics
Hybrids
Resistors
Semiconductors
(Summary)
Diodes
Transistors
Thermistors
Wire and Cable

NASA Parts Selection List (NPSL)

National Space Development Agency of Japan (NASDA)

NOTE: Unless specifically stated within the parts selection tables of the NPSL, listing of a device technology herein does NOT imply/guarantee Radiation Hardness Assurance (RHA). Applications concerned with a device's ability to tolerate exposure to various forms of space radiation (e.g., total ionizing dose, single event effects, etc.) should be reviewed and have the device assessed by the Program's radiation assurance experts. The following resources may also be consulted for initial guidance:

NASA Goddard Radiation Effects and Analysis

Jet Propulsion Laboratory Radiation Effects

Diodes

The following NASDA QTS-19500A Diode Technologies/Part Types are available for selection:

TYPE	Description

Fast Recovery Diode	Switching, Rectifier
Medium Power	Switching, Rectifier
Zener Diode	Voltage Regulator
Thin Cell Diode	Rectifier

Parts

|

Packaging

|

Radiation

|

Publications

|

Calendar

|

Experts

Admin Login

|

Request Account

|

Feedback

|

Site Map

|

Help

|

Search

NEPP Program Manager:

Chuck Barnes, Jet Propulsion Laboratory

Responsible NASA Official:

Michael Sampson, NEPAG Manager

Website Comments:

Web Development Team

Last Modified:

August 8, 2001

AETD IT Security Banner

NASA Privacy Statement

Home

|

NASA Parts Selection List (NPSL)

National Space Development Agency of Japan (NASDA)

Device Classes

The parts manufactured by various Japanese companies that are listed in the NASDA QPL and in the

NASA Core Suppliers List (CSL) Part II

, are fabricated, assembled and tested in Japan. EEE parts for NASDA's space systems applications are based on two levels of reliability and quality assurance: Class I and Class II.

Class I parts are applied to systems, subsystems or equipment, which the NASDA project office has determined to be critical. For applications not requiring Class I parts, Class II parts are used.

The NASDA Class I parts are similar to Level 1 parts described in the NASA Parts Selection List recognized by NASA as providing the highest possible level of quality and reliability (e.g. QML Class V and K, QPL Class S, FRL S), from NASA approved manufacturing sources, and meeting NASA space level parts and packaging program assessment criteria.

The NASDA Class II parts are similar to Level 2 parts described in the NASA Parts Selection List considered by NASA to have a high level of quality and reliability (e.g. QML Q, QPL Class B, FRL P), from NASA approved manufacturing sources, and meeting NASA space level parts and packaging program assessment criteria.

The detailed information about NASDA manufacturers that are listed herein is supplied in

Core Suppliers List (CSL) Part II

.

NOTE: Unless specifically stated within the parts selection tables of the NPSL, listing of a device technology herein does NOT imply/guarantee Radiation Hardness Assurance (RHA). Applications concerned with a device's ability to tolerate exposure to various forms of space radiation (e.g., total ionizing dose, single event effects, etc.) should be reviewed and have the device assessed by the Program's radiation assurance experts. The following resources may also be consulted for initial guidance:

NASA Goddard Radiation Effects and Analysis

Jet Propulsion Laboratory Radiation Effects

NEPP Program Manager:

Chuck Barnes, Jet Propulsion Laboratory

Responsible NASA Official:

Michael Sampson, NEPAG Manager

Website Comments:

Web Development Team

Last Modified:

About NPSL
Prohibited Materials
Parts Selection Table of Contents
Capacitors
Circuit Protection Devices
Fuses
Connectors
Filters
Inductors
Microcircuits
NEW!
Monolithics
Hybrids
Resistors
Semiconductors
(Summary)
Diodes
Transistors
Thermistors
Wire and Cable

NASA Parts Selection List (NPSL)
National Space Development Agency of Japan (NASDA)
Manufacturer Details:
Active Supplier Assessment Program (ASAP) Core Suppliers List (CSL) Part II
General Information:
NASDA Parts and Standards Program
Last Update:
May 1999

Diodes, Silicon

Switching Rectifiers

Fast Recovery

NASDA Qualified Part #	Description	NASDA Detail Specification	Manufacturer	Device Class	Rad Hard Level	Notes
NASDA 1SR151A	Switching, Rectifier, Fast Recovery	QTS-19500A/1029	Hitachi	1	-	
NASDA 1SR152	Switching, Rectifier, Fast Recovery	QTS-19500A/1037	Hitachi	1	-	
NASDA 1SS296	Switching, Rectifier, Fast Recovery	QTS-19500A/1033	NEC	1	-	
NASDA 1S2593A	Switching, Rectifier, Fast Recovery, High Dielectric	QTS-19500A/1030	Hitachi	1	-	

Parts

|

Packaging

|

Radiation

|

Publications

|

Calendar

|

Experts

Admin Login

|

Request Account

|

Feedback

|

Site Map

|

Help

|

Search

NEPP Program Manager:

Chuck Barnes, Jet Propulsion Laboratory

Responsible NASA Official:

Michael Sampson, NEPAG Manager

Website Comments:

Web Development Team

Last Modified:

August 8, 2001

AETD IT Security Banner

NASA Privacy Statement

Home

|

NASA Parts Selection List (NPSL)

|

Monolithic Microcircuits

|

NASDA Parts and Standards Program

|

Diodes

| Diodes, Silicon Switching Rectifiers Medium Power

About NPSL

Prohibited Materials

Parts Selection Table of Contents

Capacitors

Circuit Protection Devices

Fuses

Connectors

Filters

Inductors

Microcircuits

NEW!

Monolithics

Hybrids

Resistors

Semiconductors

(Summary)

Diodes

Transistors

Thermistors

Wire and Cable

NASA Parts Selection List (NPSL)

National Space Development Agency of Japan (NASDA)

Manufacturer Details:

Active Supplier Assessment Program (ASAP) Core Suppliers List (CSL) Part II

General Information:

NASDA Parts and Standards Program

Last Update:

May 1999

Diodes, Silicon

Switching Rectifiers

Medium Power

NASDA Qualified Part #	Description	NASDA Detail Specification	Manufacturer	Device Class	Rad Hard Level	Notes
NASDA 1S2458A	Switching, Rectifier, Medium Power	QTS-19500A/1027	Hitachi	1	-	

Parts

|

Packaging

|

Radiation

|

Publications

|

Calendar

|

Experts

Admin Login

|

Request Account

|

Feedback

|

Site Map

|

Help

|

Search

NEPP Program Manager:

Chuck Barnes, Jet Propulsion Laboratory

Responsible NASA Official:

Michael Sampson, NEPAG Manager

Website Comments:

Web Development Team

Last Modified:

August 8, 2001

AETD IT Security Banner

NASA Privacy Statement

Home
|
NASA Parts Selection List (NPSL)
|
Monolithic Microcircuits
|
NASDA Parts and Standards Program
|
Diodes
| Diodes, Silicon Rectifier Thin Cell
About NPSL
Prohibited Materials
Parts Selection Table of Contents
Capacitors
Circuit Protection Devices
Fuses
Connectors
Filters
Inductors
Microcircuits
NEW!
Monolithics
Hybrids
Resistors
Semiconductors
(Summary)
Diodes
Transistors
Thermistors
Wire and Cable

NASA Parts Selection List (NPSL)
National Space Development Agency of Japan (NASDA)
Manufacturer Details:
Active Supplier Assessment Program (ASAP) Core Suppliers List (CSL) Part II
General Information:
NASDA Parts and Standards Program
Last Update:
May 1999

Diode, Silicon

Rectifier

Thin Cell

NASDA Qualified Part #	Description	NASDA Detail Specification	Manufacturer	Device Class	Rad Hard Level	Notes
NASDA TD01	Thin Cell, Rectifier	QTS-19500A/1046	Sharp	1	-	

Parts

|

Packaging

|

Radiation

|

Publications

|

Calendar

|

Experts

Admin Login

|

Request Account

|

Feedback

|

Site Map

|

Help

|

Search

NEPP Program Manager:

Chuck Barnes, Jet Propulsion Laboratory

Responsible NASA Official:

Michael Sampson, NEPAG Manager

Website Comments:

Web Development Team

Last Modified:

August 8, 2001

AETD IT Security Banner

NASA Privacy Statement

About NPSL
Prohibited Materials
Parts Selection Table of Contents
Capacitors
Circuit Protection Devices
Fuses
Connectors
Filters
Inductors
Microcircuits
NEW!
Monolithics
Hybrids
Resistors
Semiconductors
(Summary)
Diodes
Transistors
Thermistors
Wire and Cable

NASA Parts Selection List (NPSL)

National Space Development Agency of Japan (NASDA)

Silicon Diode Manufacturers Listing

Additional information regarding parts technologies offered by these NASDA Qualified manufacturers listed in the

ASAP Core Suppliers List Part II

Listed herein is information regarding the NASDA qualified semiconductor parts suppliers with their contact names and telephone numbers. Information contained herein is subject to change by the manufacturer at any time.

Hitachi Works

Hitachi Limited

3-1-1 Saiwaicho, Hitachi

Ibaraki Pref., Japan
H. Konishi
Space Systems Division
Ph: 81-3-3258-1111
Fax: 81-3-3258-9776
NEC
Semiconductor Division
1753, Shimonumabe
Nakahara-Ku, Kawasaki-City
Kanagawa Pref., Japan
Ph: 81-3-3435-9556/HIREC
Fax: 81-3-3435-9559
Sharp Corporation
Shinjo Factory
282-1 Hajikami, Shinjo-Cho
Kitakatsuragi-gum, Nara
639-2198, Japan
Y. Uchida
Assistant Manager
Electronic Components Group
Ph: 81-745-63-3508
Fax: 81-745-63-3589

Parts
|
Packaging
|
Radiation
|
Publications
|
Calendar
|
Experts
Admin Login
|
Request Account
|
Feedback
|
Site Map

|

Help

|

Search

NEPP Program Manager:

Chuck Barnes, Jet Propulsion Laboratory

Responsible NASA Official:

Michael Sampson, NEPAG Manager

Website Comments:

Web Development Team

Last Modified:

August 8, 2001

AETD IT Security Banner

NASA Privacy Statement

Home

|

NASA Parts Selection List (NPSL)

|

Monolithic Microcircuits

|

NASDA Parts and Standards Program

|

Diodes

| Diodes, Silicon Voltage regulator Zener

About NPSL

Prohibited Materials

Parts Selection Table of Contents

Capacitors

Circuit Protection Devices

Fuses

Connectors

Filters

Inductors

Microcircuits

NEW!

Monolithics

Hybrids

Resistors

Semiconductors

(Summary)

Diodes

Transistors

Thermistors

Wire and Cable

NASA Parts Selection List (NPSL)

National Space Development Agency of Japan (NASDA)

Manufacturer Details:

Active Supplier Assessment Program (ASAP) Core Suppliers List (CSL) Part II

General Information:

NASDA Parts and Standards Program

Last Update:

May 1999

Diodes, Silicon

Voltage Regulator

Zener

NASDA Qualified Part #	Description	NASDA Detail Specification	Manufacturer	Device Class	Rad Hard Level	Notes
NASDA 1SZ56	Voltage Regulator	QTS-19500A/1038A	Hitachi	1	-	
NASDA 1SZ73	Voltage Regulator, 400 mW	QTS-19500A/1032	NEC	1	-	
NASDA 1SZ83A	Voltage Regulator	QTS-19500A/1045A	NEC	1	-	

Parts

|

Packaging

|

Radiation

|

Publications

|

Calendar

|

Experts

Admin Login

|

Request Account

|

Feedback

|

Site Map

|

Help

|

Search

NEPP Program Manager:

Chuck Barnes, Jet Propulsion Laboratory

Responsible NASA Official:

Michael Sampson, NEPAG Manager

Website Comments:

Web Development Team

Last Modified:

August 8, 2001

AETD IT Security Banner

NASA Privacy Statement

Home

|

NASA Parts Selection List (NPSL)

|

Monolithic Microcircuits

|

NASDA Parts and Standards Program

| Transitors

About NPSL

Prohibited Materials

Parts Selection Table of Contents

Capacitors

Circuit Protection Devices

Fuses

Connectors

Filters

Inductors

Microcircuits

NEW!

Monolithics

Hybrids

Resistors

Semiconductors

(Summary)

Diodes

Transistors

Thermistors

Wire and Cable

NASA Parts Selection List (NPSL)

National Space Development Agency of Japan (NASDA)

NOTE: Unless specifically stated within the parts selection tables of the NPSL, listing of a device technology herein does NOT imply/guarantee Radiation Hardness Assurance (RHA). Applications concerned with a device's ability to tolerate exposure to various forms of space radiation (e.g., total ionizing dose, single event effects, etc.) should be reviewed and have the device assessed by the Program's radiation assurance experts. The following resources may also be consulted for initial guidance:

NASA Goddard Radiation Effects and Analysis

Jet Propulsion Laboratory Radiation Effects

Transistors

The following NASDA QTS-19500A Transistor Technologies/Part Types are available for selection:

TYPE	Description
NPN	Transistor, Power
NPN	Transistor, High Power
Field Effect Transistor (FET)	
N-Channel	FET, Power

Parts

|

Packaging

|

Radiation

|

Publications

|

Calendar

|

Experts

Admin Login

|

Request Account

|

Feedback

|

Site Map

|

Help

|

Search

NEPP Program Manager:

Chuck Barnes, Jet Propulsion Laboratory

Responsible NASA Official:

Michael Sampson, NEPAG Manager

Website Comments:

Web Development Team

Last Modified:

August 8, 2001

AETD IT Security Banner

NASA Privacy Statement

Home

|

NASA Parts Selection List (NPSL)

|

Monolithic Microcircuits

|

NASDA Parts and Standards Program

|

Transistors

| Device Classes

About NPSL

Prohibited Materials

Parts Selection Table of Contents

Capacitors

Circuit Protection Devices

Fuses

Connectors

Filters

Inductors

Microcircuits

NEW!

Monolithics

Hybrids

Resistors

Semiconductors

(Summary)

Diodes

Transistors

Thermistors

Wire and Cable

NASA Parts Selection List (NPSL)

National Space Development Agency of Japan (NASDA)

Device Classes

The parts manufactured by various Japanese companies that are listed in the NASDA QPL and in the

NASA Core Suppliers List (CSL) Part II

, are fabricated, assembled and tested in Japan. EEE parts for NASDA's space systems applications are based on two levels of reliability and quality assurance: Class I and Class II.

Class I parts are applied to systems, subsystems or equipment, which the NASDA project office has determined to be critical. For applications not requiring Class I parts, Class II parts are used.

The NASDA Class I parts are similar to Level 1 parts described in the NASA Parts Selection List recognized by NASA as providing the highest possible level of quality and reliability (e.g. QML Class V and K, QPL Class S, FRL S), from NASA approved manufacturing sources, and meeting NASA space level parts and packaging program assessment criteria.

The NASDA Class II parts are similar to Level 2 parts described in the NASA Parts Selection List considered by NASA to have a high level of quality and reliability (e.g. QML Q, QPL Class B, FRL P), from NASA approved manufacturing sources, and meeting NASA space level parts and packaging program assessment criteria.

The detailed information about NASDA manufacturers that are listed herein is supplied in

Core Suppliers List (CSL) Part II

.

NOTE: Unless specifically stated within the parts selection tables of the NPSL, listing of a device technology herein does NOT imply/guarantee Radiation Hardness Assurance (RHA). Applications concerned with a device's ability to tolerate exposure to various forms of space radiation (e.g., total ionizing dose, single event effects, etc.) should be reviewed and have the device assessed by the Program's radiation assurance experts. The following resources may also be consulted for initial guidance:

NASA Goddard Radiation Effects and Analysis

Jet Propulsion Laboratory Radiation Effects

|

Site Map

|

Help

|

Search

NEPP Program Manager:

Chuck Barnes, Jet Propulsion Laboratory

Responsible NASA Official:

Michael Sampson, NEPAG Manager

Website Comments:

Web Development Team

Last Modified:

August 8, 2001

AETD IT Security Banner

NASA Privacy Statement

Home

|

NASA Parts Selection List (NPSL)

|

Monolithic Microcircuits

|

NASDA Parts and Standards Program

|

Transistors

| Field Effect Transistors (FET), Silicon N-Channel, Power

About NPSL

Prohibited Materials

Parts Selection Table of Contents

Capacitors

Circuit Protection Devices

Fuses

Connectors

Filters

Inductors

Microcircuits

NEW!

Monolithics

Hybrids

Resistors

Semiconductors

(Summary)

Diodes

Transistors

Thermistors

Wire and Cable

NASA Parts Selection List (NPSL)

National Space Development Agency of Japan (NASDA)

Manufacturer Details:

Active Supplier Assessment Program (ASAP) Core Suppliers List (CSL) Part II

General Information:

NASDA Parts and Standards Program

Last Update:

May 1999

Field Effect Transistor (FET), Silicon

N-Channel, Power

NASDA Qualified Part #	Generic Type	NASDA Detail Specification	Manufacturer	Device Class	Notes
NASDA 2SK2271	2SK2271	QTS-19500A/1047	Fuji Electric Company Ltd.	1	

Parts

|

Packaging

|

Radiation

|

Publications

|

Calendar

|

Experts

Admin Login

|

Request Account

|

Feedback

|

Site Map

|

Help

|

Search

NEPP Program Manager:

Chuck Barnes, Jet Propulsion Laboratory

Responsible NASA Official:

Michael Sampson, NEPAG Manager

Website Comments:

Web Development Team

Last Modified:

August 8, 2001

AETD IT Security Banner

NASA Privacy Statement

Home

|

NASA Parts Selection List (NPSL)

|

Monolithic Microcircuits

|

NASDA Parts and Standards Program

|

Transistors

| Transistors, Silicon NPN, High Power

About NPSL

Prohibited Materials

Parts Selection Table of Contents

Capacitors

Circuit Protection Devices

Fuses

Connectors

Filters

Inductors

Microcircuits

NEW!

Monolithics

Hybrids

Resistors

Semiconductors

(Summary)

Diodes

Transistors

Thermistors

Wire and Cable

NASA Parts Selection List (NPSL)

National Space Development Agency of Japan (NASDA)

Manufacturer Details:

Active Supplier Assessment Program (ASAP) Core Suppliers List (CSL) Part II

General Information:

NASDA Parts and Standards Program

Last Update:

May 1999

Transistors, Silicon

NPN, High Power

NASDA Qualified Part #	Generic Type	NASDA Detail Specification	Manufacturer	Device Class	Notes
NASDA 2SC4136	2SC4136	QTS-19500A/1031	Fuji Electric Company Ltd.	1	
NASDA 2SC4832	2SC4832	QTS-19500A/1044	Fuji Electric Company Ltd.	1	

Parts

|

Packaging

|

Radiation

|

Publications

|

Calendar

|

Experts

Admin Login

|

Request Account

|

Feedback

|

Site Map

|

Help

|

Search

NEPP Program Manager:

Chuck Barnes, Jet Propulsion Laboratory

Responsible NASA Official:

Michael Sampson, NEPAG Manager

Website Comments:

Web Development Team

Last Modified:

August 8, 2001

AETD IT Security Banner

NASA Privacy Statement

Home

|

NASA Parts Selection List (NPSL)

|

Monolithic Microcircuits

|

NASDA Parts and Standards Program

|

Transistors

| Transistors, Silicon NPN, Power

About NPSL

Prohibited Materials

Parts Selection Table of Contents

Capacitors

Circuit Protection Devices

Fuses

Connectors

Filters

Inductors

Microcircuits

NEW!

Monolithics

Hybrids

Resistors

Semiconductors

(Summary)

Diodes

Transistors

Thermistors

Wire and Cable

NASA Parts Selection List (NPSL)

National Space Development Agency of Japan (NASDA)

Manufacturer Details:

Active Supplier Assessment Program (ASAP) Core Suppliers List (CSL) Part II

General Information:

NASDA Parts and Standards Program

Last Update:

May 1999

Transistors, Silicon

NPN, Power

NASDA Qualified Part #	Generic Type	NASDA Detail Specification	Manufacturer	Device Class	Notes
NASDA 2SC4534	2SC4534	QTS-19500A/1040A	Fuji Electric Company Ltd.	1	

Parts

|

Packaging

|

Radiation

|

Publications

|

Calendar

|

Experts

Admin Login

|

Request Account

|

Feedback

|

Site Map

|

Help

|

Search

NEPP Program Manager:

Chuck Barnes, Jet Propulsion Laboratory

Responsible NASA Official:

Michael Sampson, NEPAG Manager

Website Comments:

Web Development Team

Last Modified:

August 8, 2001

AETD IT Security Banner

NASA Privacy Statement

Home

|

NASA Parts Selection List (NPSL)

|

Monolithic Microcircuits

|

NASDA Parts and Standards Program

|

Transistors

| Transistors Manufacturer Listing

About NPSL

Prohibited Materials

Parts Selection Table of Contents

Capacitors

Circuit Protection Devices

Fuses

Connectors

Filters

Inductors

Microcircuits

NEW!

Monolithics

Hybrids

Resistors

Semiconductors

(Summary)

Diodes

Transistors

Thermistors

Wire and Cable

NASA Parts Selection List (NPSL)

National Space Development Agency of Japan (NASDA)

Transistor Manufacturer Listing

Additional information regarding parts technologies offered by these NASDA Qualified manufacturers listed in the

ASAP Core Suppliers List Part II.

Listed herein is information regarding the NASDA qualified semiconductor parts supplier including contact name and telephone number. Information contained herein is subject to change by the manufacturer at any time.

Fuji Electric Company, Ltd.

Matsumoto Factory

4-18-1, Tsukama, Matsumoto

Nagano Pref., Japan

Ph: 81-3-3435-9556/HIREC

Fax: 81-3-3435-9559

Parts

|

Packaging

|

Radiation

|

Publications

|

Calendar

|

Experts

Admin Login

|

Request Account

|

Feedback

|

Site Map

|

Help

|

Search

NEPP Program Manager:

Chuck Barnes, Jet Propulsion Laboratory

Responsible NASA Official:

Michael Sampson, NEPAG Manager

Website Comments:

Web Development Team

Last Modified:

August 8, 2001

AETD IT Security Banner

NASA Privacy Statement

NASA Parts Selection List (NPSL)

NOTE: Unless specifically stated within the parts selection tables of the NPSL, listing of a device technology herein does NOT imply/guarantee Radiation Hardness Assurance (RHA). Applications concerned with a device's ability to tolerate exposure to various forms of space radiation (e.g., total ionizing dose, single event effects, etc.) should be reviewed and have the device assessed by the Program's radiation assurance experts. The following resources may also be consulted for initial guidance:

NASA Goddard Radiation Effects and Analysis

Jet Propulsion Laboratory Radiation Effects

Diode Types

The following MIL-PRF-19500 silicon diode types are available for selection:

Diode Type	Description
Small signal	Rectifier, General Purpose
Small signal	Rectifier, Signal
Small signal	Rectifier, Switching

Power	Rectifier, Standard
Power	Rectifier, General Purpose
Power	Rectifier, Fast Recovery
Power	Rectifier, Ultra Fast Recovery
Multiple Array	Common Anode/Cathode, Dual and Monolithic
Zener	Voltage Regulator, 500 mW, TA 25deg.C
Zener	Voltage Regulator, Low Noise, 500 mW, TA 25deg.C
Zener	Voltage Regulator, Noncavity, 500 mW, TA 25deg.C
Zener	Voltage Reference, Low Level, 475 mW, TA 25deg.C
Zener	Voltage Reference, 500 mW, TA 25deg.C
Zener	Voltage Regulator, 1.0 W, TA 25deg.C
Zener	Voltage Regulator, 1.5 W, TA 25deg.C
Zener	Voltage Regulator, 5.0 W, TA 25deg.C
Zener	Voltage Regulator, 10 W, TA 25deg.C
Transient Voltage Suppressor	Transient Voltage Suppressor, 1500 W, TA 25deg.C
Transient Voltage Suppressor	Transient Voltage Suppressor, Bi-directional, 500 W, TA 25deg.C
Transient Voltage Suppressor	Transient Voltage Suppressor, Bi-directional, 1500 W, TA 25deg.C
FET	Current Regulator
Schottky Barrier	Rectifier
Thyristor	Silicon Controlled Rectifier
NASDA-QTS-19500A	Diodes

NOTE:

The activity responsible for the MIL-PRF-19500 qualified parts is the Defense Supply Center Columbus (DSCC).

The activity repsponsible for the QTS-19500A qualified parts listed herein is the National Space Development Agency of Japan (NASDA).

Site Map

|

Help

|

Search

NEPP Program Manager:

Chuck Barnes, Jet Propulsion Laboratory

Responsible NASA Official:

Michael Sampson, NEPAG Manager

Website Comments:

Web Development Team

Last Modified:

August 8, 2001

AETD IT Security Banner

NASA Privacy Statement

Home

|

NASA Parts Selection List (NPSL)

| Diodes

About NPSL

Prohibited Materials

Parts Selection Table of Contents

Capacitors

Circuit Protection Devices

Fuses

Connectors

Filters

Inductors

Microcircuits

NEW!

Monolithics

Hybrids

Resistors

Semiconductors

(Summary)

Diodes

Transistors

Thermistors

Wire and Cable

NASA Parts Selection List (NPSL)

DIODES

MIL-PRF-19500 Part Number Explanation

Example: JAN#%1N3891AR-1 where,

JAN

Joint Army and Navy (JAN) Military Part Designator

#

Quality Level

%

Indicates Radiation Hardness Assurance (RHA) Level

1N

Component designator for Diodes

3891

Identification Number

AR

Suffix Letters

-1

Indicates metallurgical bond

Quality Level, (#)

JANS or S	Highest Quality Level 1
TXV	Level 2
TX	

Radiation Hardness Assurance Level, (%)

RHA Designator	Total Ionizing Dose (RAD (Si))	Neutron Fluence (n/cm**2)
M	3 x 10**3	2 x 10**12
D	1 x 10**4	2 x 10**12
L	5 x 10**4	2 x 10**12
R	1 x 10**5	2 x 10**12
F	3 x 10**5	2 x 10**12
G	6 x 10**5	2 x 10**12
H	1 x 10**6	2 x 10**12

NOTE: Unless specifically stated within the parts selection tables of the NPSL, listing of a device technology herein does NOT imply/guarantee Radiation Hardness Assurance (RHA). Applications concerned with a device's ability to tolerate exposure to various forms of space radiation (e.g., total ionizing dose, single event effects, etc.) should be reviewed and have the device assessed by the Program's radiation assurance experts. The following resources may also be consulted for initial guidance:

NASA Goddard Radiation Effects and Analysis

Jet Propulsion Laboratory Radiation Effects

Suffix letters

A, B, C, etc	Indicates a modified version which is substitutable for the basic numbered (non-suffix) device
M	Indicates matching of specified parameters of separate devices
R	Indicates reverse polarity packaging of the basic numbered device
L or S	Indicates that the terminal leads are longer or shorter, respectively than those of the basic numbered device
U	Indicates leaded or surface mounted devices
UR	Indicates leaded or surface mounted (round end cap diodes)
US	Indicates leaded or surface mounted (square end cap diodes)

NEPP Program Manager:
Chuck Barnes, Jet Propulsion Laboratory
Responsible NASA Official:
Michael Sampson, NEPAG Manager
Website Comments:
Web Development Team
Last Modified:
August 8, 2001

AETD IT Security Banner

NASA Privacy Statement

NASA Parts Selection List (NPSL)

Radiation Test:

GSFC SEU Radiation Data Bank

JPL's Radiation Data Bank

Manufacturer:

Active Supplier Assessment Program (ASAP) Core Supplier List

Part Procurement:

Part Number/Procurement details

.

Application Notes:

Applicable details

Last Update:

October 1999

Diodes, Silicon, Rectifier

General Purpose

Part Number	Detail Specification	V sub F (V dc) (max) @ I sub F	I sub F (A dc) (max)	I sub R (nA) (max) @V sub rwm	V sub rwm (V) (pk)	Level 1 #	Level 2 #	Manufacturer
JAN#%1N645-1	MIL-PRF-19500/240	1.0	0.4	50	225	S	TXV	BKC, MC
JAN#%1N647-1	MIL-PRF-19500/240	1.0	0.4	50	400	S	TXV	BKC, MC
JAN#%1N649-1	MIL-PRF-19500/240	1.0	0.4	50	600	S	TXV	BKC, MC

NPSL Home Page	Parts Selection	Summary	Type

NASA Parts Selection List (NPSL)

Diodes, Silicon

Rectifier

General Purpose

APPLICATION NOTES:

1) For the MIL-PRF-19500/240 parts listed herein, use the MIL-PRF-19500/587 part numbers for new designs.

2) Microsemi Corporation is the only qualified source for the JANS product assurance level at this time.

NPSL Home Page	Parts Selection	Summary	Type

NASA Parts Selection List (NPSL)

Radiation Test:

GSFC SEU Radiation Data Bank

JPL's Radiation Data Bank

Manufacturer:

Active Supplier Assessment Program (ASAP) Core Supplier List

Part Procurement:

Part Number/Procurement details

.

Application Notes:

Applicable details

Last Update:

October 1999

Diodes, Silicon, Rectifier

Signal

Part Number	Detail Specification	V sub F (V dc) (max) @ I sub F	I sub F (A dc) (max)	I sub R (nA) (max) @V sub rwm	V sub rwm (V) (pk)	Level 1 #	Level 2 #	Manufacturer
JAN#%1N6661	MIL-PRF-19500/587	1.0	0.5	50	225	S	TXV	MC
JAN#%1N6662	MIL-PRF-19500/587	1.0	0.5	50	400	S	TXV	MC
JAN#%1N6663	MIL-PRF-19500/587	1.0	0.5	50	600	S	TXV	MC

NPSL Home Page	Parts Selection	Summary	Type

NASA Parts Selection List (NPSL)

Diodes, Silicon

Small Signal

Rectifier

APPLICATION NOTES:

1) For the MIL-PRF-19500/116 part listed herein, use the MIL-PRF-19500/578 part number for new designs.

NPSL Home Page	Parts Selection	Summary	Type

NASA Parts Selection List (NPSL)

Radiation Test:

GSFC SEU Radiation Data Bank

JPL's Radiation Data Bank

Manufacturer:

Active Supplier Assessment Program (ASAP) Core Supplier List

Part Procurement:

Part Number/Procurement details

.

Application Notes:

Applicable details

Last Update:

June 2002: Click here for summary of changes

Diodes, Silicon, Rectifier

Switching

Part Number	Detail Specification	V sub F (V dc) (max) @ I sub F	I sub F (A dc) (max)	I sub R (nA) (max) @V sub rwm	V sub rwm (V) (pk
JAN#%1N4148-1 CAUTION: See Application Notes. NOT RECOMMENDED FOR NEW DESIGNSM	MIL-PRF-19500/116	0.80	0.2	500	75
JAN#%1N4150-1	MIL-PRF-19500/231	0.86	0.2	100	50
JAN#%1N4153-1	MIL-PRF-19500/337	0.81	015	50	50
JAN#%1N6638	MIL-PRF-19500/578	0.80	0.3	500	125
JAN#%1N6642	MIL-PRF-19500/578	1.0	0.3	500	75
JAN#%1N6642U	MIL-PRF-19500/578	1.0	0.3	500	75
JAN#%1N6643	MIL-PRF-19500/578	1.0	0.3	500	50
JAN#%1N6643U	MIL-PRF-19500/578	1.0	0.3	500	50

NPSL Home Page	Parts Selection	Summary	Type

NASA Parts Selection List (NPSL)

Diodes, Silicon

Rectifier

Switching

APPLICATION NOTES:

1) The 1N4148-1 diode types are NOT recommended for new designs. These devices (especially the surface mount "UR" designation styles) may be susceptible to thermally induced cracking such as may occur during hand soldering. The 1N6642 diode types made in accordance with MIL-PRF-19500/578 are the recommended replacement for the 1N4148-1 because of a more robust construction and identical electrical performance characteristics.

For surface mount, the 1N6642US diodes are direct electrical replacements for the 1N4148UR-1, but they are physically

larger and, therefore, cannot be easily interchanged.

For through-hole applications, the axial leaded 1N6642 diodes are direct form, fit, function replacements for the axial leaded 1N4148-1 types.

Users are strongly advised to familiarize themselves with the manufacturer's recommended installation practices. Specific emphasis

must be placed on process controls that minimize thermally induced stresses. This is particularly important for assembly facilities who

intend to use hand soldering techniques to install surface mount devices of any component type.

Refer to NASA GSFC Advisory

NA-GSFC-2002-01

for further details.

NPSL Home Page	Parts Selection	Summary	Type

Recent NASA Parts Selection List Updates for Small Signal Diodes

06/11/02	Updated parts listing table to warn users to avoid use of 1N4148-1 diodes for new designs due to inherent construction weaknesses that make these parts susceptible to thermally induced cracking. Inclu
06/11/02	Updated application note to warn users to avoid use of 1N4148-1 diodes for new designs due to inherent construction weaknesses that make these parts susceptible to thermally induced cracking.
04/23/98	Corrected typo for V sub R for the 1N6642 diode. Typo inadvertently had listed V sub R = 754 V instead of the correct value of V sub R = 75 V.

NASA Parts Selection List (NPSL)

Radiation Test:

GSFC SEU Radiation Data Bank

JPL's Radiation Data Bank

Manufacturer:

Active Supplier Assessment Program (ASAP) Core Supplier List

Part Procurement:

Part Number/Procurement details

.

Application Notes:

Applicable details

Last Update:

October 1999

Diodes, Silicon, Rectifier

Power, Standard

Part Number	Description	Detail Specification	V sub F (V dc) (max) @I sub F	I sub F (A dc) (max)	I sub R (m A dc) (max) @V sub rwm	V sub rwm (V dc) (max)	Level 1 #	Level 2 #	Manufactur
JAN#%1N5614	Standard Rectifier	MIL-PRF-19500/427	1.3	3 (3)	0.5	200	S	TXV	MC, SC, SS
JAN#%1N5616	Standard Rectifier	MIL-PRF-19500/427	1.3	3 (3)	0.5	400	S	TXV	MC, SC, SS
JAN#%1N5618	Standard Rectifier	MIL-PRF-19500/427	1.3	3 (3)	0.5	600	S	TXV	MC, SC, SS
JAN#%1N5620	Standard Rectifier	MIL-PRF-19500/427	1.3	3 (3)	0.5	800	-	TXV	MC, SC, SS
JAN#%1N5622	Standard Rectifier	MIL-PRF-19500/427	1.3	3 (3)	0.5	1000	-	TXV	MC, SC, SS

NPSL Home Page	Parts Selection	Summary	Type

NASA Parts Selection List (NPSL)

Diodes, Silicon, Rectifier

Power, Standard

APPLICATION NOTES:

Microsemi Corporation is the only qualified source for the JANS product assurance level at this time.

NPSL Home Page	Parts Selection	Summary	Type

NASA Parts Selection List (NPSL)

Radiation Test:

GSFC SEU Radiation Data Bank

JPL's Radiation Data Bank

Manufacturer:

Active Supplier Assessment Program (ASAP) Core Supplier List

Part Procurement:

Part Number/Procurement details

.

Application Notes:

Applicable details

Last Update:

October 1999

Diodes, Silicon, Rectifier

Power, General Purpose

Part Number	Detail Specification	V sub F (V dc) (max) @I sub F	I sub F (A dc) (max)	I sub R (m A dc) (max) @V sub rwm	V sub rwm (V dc) (max)	Level 1 #	Level 2 #	Manufacturer
JAN#%1N1202A	MIL-PRF-19500/260	1.35	38	5.0	200	-	TXV	MC
JAN#%1N5550	MIL-PRF-19500/420	1.2	9	1.0	200	S	TXV	MC, SC, SS, VMI
JAN#%1N5551	MIL-PRF-19500/420	1.2	9	1.0	400	S	TXV	MC, SC, SS, VMI
JAN#%1N5552	MIL-PRF-19500/420	1.2	9	1.0	600	S	TXV	MC, SC, SS, VMI
JAN#%1N5553	MIL-PRF-19500/420	1.3	9	1.0	800	S	TXV	MC, SC, SS, VMI
JAN#%1N5554	MIL-PRF-19500/420	1.3	9	1.0	1000	S	TXV	MC, SC, SS, VMI

NPSL Home Page	Parts Selection	Summary	Type

NASA Parts Selection List (NPSL)

Diodes, Silicon, Rectifier

Power, General Purpose

APPLICATION NOTES:

1) Microsemi Corporation is the only qualified source for the JANS product assurance level at this time.

NPSL Home Page	Parts Selection	Summary	Type

NASA Parts Selection List (NPSL)

Radiation Test:

GSFC SEU Radiation Data Bank

JPL's Radiation Data Bank

Manufacturer:

Active Supplier Assessment Program (ASAP) Core Supplier List

Part Procurement:

Part Number/Procurement details

.

Application Notes:

Applicable details

Last Update:

October 1999

Diodes, Silicon, Rectifier

Power, Fast Recovery

Part Number	Detail Specification	V sub F (V dc) (max) @I sub F	I sub F (A dc) (max)	I sub R (m A dc) (max) @V sub rwm	V sub rwm (V dc) (max)	Level 1 #	Level 2 #	Manufacturer
JAN#%1N3891	MIL-PRF-19500/304	1.0	38	10	200	-	TXV	MC, SCI
JAN#%1N3891A	MIL-PRF-19500/304	1.0	38	10	200	-	TXV	MC, SCI
JAN#%1N3891R	MIL-PRF-19500/304	1.0	38	10	200	-	TXV	MC, SCI
JAN#%1N3891AR	MIL-PRF-19500/304	1.5	38	10	200	-	TXV	MC
JAN#%1N3893	MIL-PRF-19500/304	1.5	38	10	400	-	TXV	MC, SCI
JAN#%1N3893A	MIL-PRF-19500/304	1.5	38	10	400	-	TXV	MC
JAN#%1N3893R	MIL-PRF-19500/304	1.5	38	10	400	-	TXV	MC, SCI
JAN#%1N3893AR	MIL-PRF-19500/304	1.5	38	10	400	-	TXV	MC
JAN#%1N5415	MIL-PRF-19500/411	1.5	9	1.0	50	S	TXV	MC, BKC, SC, SS, VMI
JAN#%1N5416	MIL-PRF-19500/411	1.5	9	1.0	100	S	TXV	MC, BKC, SC, SS, VMI
JAN#%1N5417	MIL-PRF-19500/411	1.5	9	1.0	200	S	TXV	MC, BKC, SC, SS, VMI
JAN#%1N5418	MIL-PRF-19500/411	1.5	9	1.0	400	S	TXV	MC, BKC, SC, SS, VMI
JAN#%1N5419	MIL-PRF-19500/411	1.5	9	1.0	500	S	TXV	MC, BKC, SC, SS, VMI
JAN#%1N5420	MIL-PRF-19500/411	1.5	9	1.0	600	S	TXV	MC, BKC, SS, VMI
JAN#%1N5615	MIL-PRF-19500/429	1.6	3	0.5	200	S	TXV	MC, SC, SS, VMI
JAN#%1N5617	MIL-PRF-19500/429	0.81	3	0.5	400	S	TXV	MC, SC, SS, VMI
JAN#%1N5619	MIL-PRF-19500/429	0.80	3	0.5	600	S	TXV	MC, SC, SS, VMI
JAN#%1N5621	MIL-PRF-19500/429	1.0	3	0.5	800	S	TXV	MC, SC, SS, VMI
JAN#%1N5623	MIL-PRF-19500/429	1.6	3	0.5	1000	S	TXV	MC, SC, SS, VMI
JAN#%1N5802	MIL-PRF-19500/477	0.975	2.5	1.0	50	S	TXV	MC, SC, SS,
JAN#%1N5802US	MIL-PRF-19500/477	0.975	2.5	1.0	50	S	TXV	MC, SS
JAN#%1N5804	MIL-PRF-19500/477	0.975	2.5	1.0	100	S	TXV	MC, BKC, SC, SS
JAN#%1N5806	MIL-PRF-19500/477	0.975	2.5	1.0	150	S	TXV	MC, BKC
JAN#%1N5807	MIL-PRF-19500/477	0.925	2.5	5.0	50	S	TXV	MC, BKC, SC, SS
JAN#%1N5807US	MIL-PRF-19500/477	0.925	6.0	5.0	50	S	TXV	MC, BKC, SS
JAN#%1N5809	MIL-PRF-19500/477	0.925	6.0	5.0	100	S	TXV	MC, BKC, SC, SS
JAN#%1N5811	MIL-PRF-19500/477	0.925	6.0	5.0	150	S	TXV	MC, BKC, SC, SS

NASA Parts Selection List (NPSL)

Diodes, Silicon, Rectifier

Power, Fast Recovery

APPLICATION NOTES:

1) Microsemi Corporation is the only qualified source for the JANS product assurance level at this time.

NPSL Home Page	Parts Selection	Summary	Type

NASA Parts Selection List (NPSL)

Radiation Test:

GSFC SEU Radiation Data Bank

JPL's Radiation Data Bank

Manufacturer:

Active Supplier Assessment Program (ASAP) Core Supplier List

Part Procurement:

Part Number/Procurement details

.

Application Notes:

Applicable details

Last Update:

October 1999

Diodes, Silicon, Rectifier

Power, Ultra Fast Recovery

Part Number	Detail Specification	V sub F (V dc) (max) @I sub F	I sub F (A dc) (max)	I sub R (m A dc) (max) @V sub rwm	V sub rwm (V dc) (max)	Level 1 #	Level 2 #	Manufacturer
JAN#%1N5814	MIL-PRF-19500/478	0.950	20.0	10.0	100	S	TXV	MC, SCI
JAN#%1N5816	MIL-PRF-19500/478	0.950	20	10.0	150	S	TXV	MC, SCI

NPSL Home Page	Parts Selection	Summary	Type

NASA Parts Selection List (NPSL)

Diodes, Silicon, Rectifier

Power, Ultra Fast Recovery

APPLICATION NOTES:

1) Microsemi Corporation is the only qualified source for the JANS product assurance level at this time.

NASA Parts Selection List (NPSL)

Diodes, Silicon

Power

APPLICATION NOTES:

Microsemi Corporation is the only qualified source for the JANS product assurance level at this time.

NPSL Home Page	Parts Selection	Summary	Type

NASA Parts Selection List (NPSL)

Radiation Test:

GSFC SEU Radiation Data Bank

JPL's Radiation Data Bank

Manufacturer:

Active Supplier Assessment Program (ASAP) Core Supplier List

Part Procurement:

Part Number/Procurement details

.

Application Notes:

Applicable details

Last Update:

October 1999

Diodes, Silicon

Multiple Array

V sub F (

Max

) = 1.0 V dc, I sub F (peak) = 100 mA dc

Part Number	Description	Detail Specification	I sub R (Max) (mA dc) @V sub R	V sub R (V) (dc)	Level 1 (#)	Level 2 (#)	Manufacturer
JAN#%1N5768	Common Cathode	MIL-PRF-19500/474	0.1	40	-	TXV	LINF
JAN#%1N5770	Common Anode	MIL-PRF-19500/474	0.1	40	-	TXV	LINF
JAN#%1N5772	Common Anode/Cathode	MIL-PRF-19500/474	0.1	40	-	TXV	LINF
JAN#%1N5774	Dual Common Anode/Cathode	MIL-PRF-19500/474	0.1	40	-	TXV	LINF
JAN#%1N6100	Individual Array	MIL-PRF-19500/474	0.025	20	-	TXV	LINF
JAN#%1N6101	Individual Array	MIL-PRF-19500/474	0.025	20	-	TXV	LINF
JAN#%1N6506	Common Cathode	MIL-PRF-19500/474	0.1	40	-	TXV	LINF
JAN#%1N6507	Common Anode	MIL-PRF-19500/474	0.1	40	-	TXV	LINF
JAN#%1N6508	Common Anode/Cathode	MIL-PRF-19500/474	0.1	40	-	TXV	LINF
JAN#%1N6509	Dual Common Anode/Cathode	MIL-PRF-19500/474	0.1	40	-	TXV	LINF

JAN#%1N6510	Individual Array	MIL-PRF-19500/474	0.025	20	-	TXV	LINF
JAN#%1N6511	Individual Array	MIL-PRF-19500/474	0.025	20	-	TXV	LINF

NASA Parts Selection List (NPSL)

Diodes, Silicon

Multiple Array

APPLICATION NOTES:

1.0 The 1N5768, 1N5770, 1N5772, 1N5774, 1N6100, 1N6101, and the 1N6510 are supplied in Flat Pack packages.

2.0 The 1N6506, 1N6507, 1N6508, 1N6509, and the 1N6511 are supplied as Dual-in-Line (DIPs).

NPSL Home Page	Parts Selection	Summary	Type

NASA Parts Selection List (NPSL)

Radiation Test:

GSFC SEU Radiation Data Bank

JPL's Radiation Data Bank

Manufacturer:

Active Supplier Assessment Program (ASAP) Core Supplier List

Part Procurement:

Part Number/Procurement details

.

Application Notes:

Applicable details

Last Update:

October 1999

Diodes, Silicon

ZENER

Voltage Regulator:

P sub T = 500 mW, T

sub

A

= 25

**

deg.

C

Part Number	Detail Specification	V sub Z (Nominal) (V dc) @ I sub ZT	I sub ZT (mA) dc	I sub ZM sub (max) sub (mA dc)	Level 1 (#)	Level 2 (#)	Manufacturer
JAN#%1N746A-1	MIL-PRF-19500/127	3.3	20	120	-	TXV	BKC, CDI, MC
JAN#%1N747A-1	MIL-PRF-19500/127	3.6	20	110	-	TXV	BKC, CDI, MC
JAN#%1N748A-1	MIL-PRF-19500/127	3.9	20	100	-	TXV	BKC, CDI, MC
JAN#%1N749A-1	MIL-PRF-19500/127	4.3	20	90	-	TXV	BKC, CDI, MC
JAN#%1N750A-1	MIL-PRF-19500/127	4.7	20	85	-	TXV	BKC, CDI, MC
JAN#%1N751A-1	MIL-PRF-19500/127	5.1	20	75	-	TXV	BKC, CDI, MC
JAN#%1N752A-1	MIL-PRF-19500/127	5.6	20	70	-	TXV	BKC, CDI, MC
JAN#%1N753A-1	MIL-PRF-19500/127	6.2	20	65	-	TXV	BKC, CDI, MC
JAN#%1N754A-1	MIL-PRF-19500/127	6.8	20	60	-	TXV	BKC, CDI, MC
JAN#%1N755A-1	MIL-PRF-19500/127	7.5	20	55	-	TXV	BKC, CDI, MC
JAN#%1N756A-1	MIL-PRF-19500/127	8.2	20	50	-	TXV	BKC, CDI, MC
JAN#%1N757A-1	MIL-PRF-19500/127	9.1	20	45	-	TXV	BKC, CDI, MC
JAN#%1N758A-1	MIL-PRF-19500/127	10.0	20	40	-	TXV	BKC, CDI, MC
JAN#%1N759A-1	MIL-PRF-19500/127	12.0	20	35	-	TXV	BKC, CDI, MC
JAN#%1N962B-1	MIL-PRF-19500/117	11	11.5	35	-	TXV	BKC, CDI, MC
JAN#%1N963B-1	MIL-PRF-19500/117	12	10.5	32	-	TXV	BKC, CDI, MC
JAN#%1N964B-1	MIL-PRF-19500/117	13	9.5	30	-	TXV	BKC, CDI, MC
JAN#%1N965B-1	MIL-PRF-19500/117	15	8.5	26	-	TXV	BKC, CDI, MC
JAN#%1N966B-1	MIL-PRF-19500/117	16	7.8	25	-	TXV	BKC, CDI, MC
JAN#%1N967B-1	MIL-PRF-19500/117	18	7.0	21	-	TXV	BKC, CDI, MC
JAN#%1N968B-1	MIL-PRF-19500/117	20	6.2	19	-	TXV	BKC, CDI, MC
JAN#%1N969B-1	MIL-PRF-19500/117	22	5.6	17	-	TXV	BKC, CDI, MC
JAN#%1N970B-1	MIL-PRF-19500/117	24	5.2	16	-	TXV	BKC, CDI, MC
JAN#%1N971B-1	MIL-PRF-19500/117	27	4.6	14	-	TXV	BKC, CDI, MC
JAN#%1N972B-1	MIL-PRF-19500/117	30	4.2	13	-	TXV	BKC, CDI, MC
JAN#%1N973B-1	MIL-PRF-19500/117	33	3.8	12	-	TXV	BKC, CDI, MC
JAN#%1N974B-1	MIL-PRF-19500/117	36	3.4	11	-	TXV	BKC, CDI, MC
JAN#%1N975B-1	MIL-PRF-19500/117	39	3.2	9.1	-	TXV	BKC, CDI, MC
JAN#%1N976B-1	MIL-PRF-19500/117	43	3.0	8.8	-	TXV	BKC, CDI, MC
JAN#%1N977B-1	MIL-PRF-19500/117	47	2.7	7.9	-	TXV	BKC, CDI, MC
JAN#%1N978B-1	MIL-PRF-19500/117	51	2.5	7.4	-	TXV	BKC, CDI, MC
JAN#%1N979B-1	MIL-PRF-19500/117	56	2.2	6.9	-	TXV	BKC, CDI, MC
JAN#%1N980B-1	MIL-PRF-19500/117	62	2.0	6.0	-	TXV	BKC, CDI, MC
JAN#%1N981B-1	MIL-PRF-19500/117	68	1.8	5.5	-	TXV	BKC, CDI, MC
JAN#%1N982B-1	MIL-PRF-19500/117	75	1.7	5.1	-	TXV	BKC, CDI, MC
JAN#%1N983B-1	MIL-PRF-19500/117	82	1.5	4.6	-	TXV	BKC, CDI, MC
JAN#%1N984B-1	MIL-PRF-19500/117	91	1.4	4.2	-	TXV	BKC, CDI, MC
JAN#%1N985B-1	MIL-PRF-19500/117	100	1.3	3.7	-	TXV	BKC, CDI, MC
JAN#%1N986B-1	MIL-PRF-19500/117	110	1.1	3.3	-	TXV	BKC, CDI, MC
JAN#%1N987B-1	MIL-PRF-19500/117	120	1.0	3.1	-	TXV	BKC, MC
JAN#%1N988B-1	MIL-PRF-19500/117	130	0.95	2.7	-	TXV	BKC, MC
JAN#%1N989B-1	MIL-PRF-19500/117	150	0.85	2.4	-	TXV	BKC, MC
JAN#%1N990B-1	MIL-PRF-19500/117	160	0.80	2.2	-	TXV	BKC, MC
JAN#%1N991B-1	MIL-PRF-19500/117	180	0.68	2.0	-	TXV	BKC, MC

JAN#%1N992B-1	MIL-PRF-19500/117	200	0.65	1.8	-	TXV	BKC, MC
JAN#%1N4370C-1	MIL-PRF-19500/127	2.4	30	155	-	TXV	MC, CDI
JAN#%1N4371C-1	MIL-PRF-19500/127	2.7	30	140	-	TXV	MC, CDI
JAN#%1N4372C-1	MIL-PRF-19500/127	3.0	29	125	-	TXV	MC, CDI

NASA Parts Selection List (NPSL)

Diodes, Silicon

Zener

Voltage Regulator, 500 mW at

T

sub

A

= 25

**

deg.

C

APPLICATION NOTES:

1) More than one qualified supplier is available for devices listed in the table. There are no JANS qualified sources available at this time.

NPSL Home Page	Parts Selection	Summary	Type

NASA Parts Selection List (NPSL)

Radiation Test:

GSFC SEU Radiation Data Bank

JPL's Radiation Data Bank

Manufacturer:

Active Supplier Assessment Program (ASAP) Core Supplier List

Part Procurement:

Part Number/Procurement details

.

Application Notes:

Applicable details

Last Update:

October 1999

Diodes, Silicon

ZENER

Voltage Regulator, Low Noise:

P sub T = 500 mW, T sub A = 25 **deg.C

Part Number	Detail Specification	V sub Z (Nominal) (V dc) @ I sub ZT	I sub ZT (mA dc)	I sub ZM sub (max) sub (mA dc)	Level 1 (#)	Level 2 (#)	Manufacturer
JAN#%1N4099-1	MIL-PRF-19500/435	6.8	0.25	56	-	TXV	CDI, MC, BKC
JAN#%1N4100-1	MIL-PRF-19500/435	7.5	0.25	51	-	TXV	CDI, MC, BKC
JAN#%1N4101-1	MIL-PRF-19500/435	8.2	0.25	46	-	TXV	CDI, MC, BKC
JAN#%1N4102-1	MIL-PRF-19500/435	8.7	0.25	44	-	TXV	CDI, MC, BKC
JAN#%1N4103-1	MIL-PRF-19500/435	9.1	0.25	42	-	TXV	CDI, MC, BKC
JAN#%1N4104-1	MIL-PRF-19500/435	10.0	0.25	38	-	TXV	CDI, MC, BKC
JAN#%1N4105-1	MIL-PRF-19500/435	11.0	0.25	35	-	TXV	CDI, MC, BKC
JAN#%1N4106-1	MIL-PRF-19500/435	12.0	0.25	32	-	TXV	CDI, MC, BKC
JAN#%1N4107-1	MIL-PRF-19500/435	13.0	0.25	29	-	TXV	CDI, MC, BKC
JAN#%1N4108-1	MIL-PRF-19500/435	14.0	0.25	27	-	TXV	CDI, MC, BKC
JAN#%1N4109-1	MIL-PRF-19500/435	15.0	0.25	25	-	TXV	CDI, MC, BKC
JAN#%1N4110-1	MIL-PRF-19500/435	16.0	0.25	24	-	TXV	CDI, MC, BKC
JAN#%1N4111-1	MIL-PRF-19500/435	17.0	0.25	22	-	TXV	CDI, MC, BKC
JAN#%1N4112-1	MIL-PRF-19500/435	18.0	0.25	21	-	TXV	CDI, MC, BKC
JAN#%1N4113-1	MIL-PRF-19500/435	19.0	0.25	20	-	TXV	CDI, MC, BKC
JAN#%1N4114-1	MIL-PRF-19500/435	20.0	0.25	19	-	TXV	CDI, MC, BKC
JAN#%1N4115-1	MIL-PRF-19500/435	22.0	0.25	17	-	TXV	CDI, MC, BKC
JAN#%1N4116-1	MIL-PRF-19500/435	24.0	0.25	16	-	TXV	CDI, MC, BKC
JAN#%1N4117-1	MIL-PRF-19500/435	25.0	0.25	15	-	TXV	CDI, MC, BKC
JAN#%1N4118-1	MIL-PRF-19500/435	27.0	0.25	14	-	TXV	CDI, MC, BKC
JAN#%1N4119-1	MIL-PRF-19500/435	28.0	0.25	14	-	TXV	CDI, MC, BKC
JAN#%1N4120-1	MIL-PRF-19500/435	30.0	0.25	13	-	TXV	CDI, MC, BKC
JAN#%1N4121-1	MIL-PRF-19500/435	33.0	0.25	12	-	TXV	CDI, MC, BKC
JAN#%1N4122-1	MIL-PRF-19500/435	36.0	0.25	11	-	TXV	CDI, MC
JAN#%1N4123-1	MIL-PRF-19500/435	39.0	0.25	9.8	-	TXV	CDI, MC
JAN#%1N4124-1	MIL-PRF-19500/435	43.0	0.25	8.9	-	TXV	CDI, MC
JAN#%1N4125-1	MIL-PRF-19500/435	47.0	0.25	8.1	-	TXV	CDI, MC
JAN#%1N4126-1	MIL-PRF-19500/435	51.0	0.25	7.5	-	TXV	CDI, MC
JAN#%1N4127-1	MIL-PRF-19500/435	56.0	0.25	6.7	-	TXV	CDI, MC
JAN#%1N4128-1	MIL-PRF-19500/435	60.0	0.25	6.4	-	TXV	CDI, MC
JAN#%1N4129-1	MIL-PRF-19500/435	62.0	0.25	6.1	-	TXV	CDI, MC
JAN#%1N4130-1	MIL-PRF-19500/435	68.0	0.25	5.6	-	TXV	CDI, MC
JAN#%1N4131-1	MIL-PRF-19500/435	75.0	0.25	5.1	-	TXV	CDI, MC
JAN#%1N4132-1	MIL-PRF-19500/435	82.0	0.25	4.6	-	TXV	CDI, MC
JAN#%1N4133-1	MIL-PRF-19500/435	87.0	0.25	4.4	-	TXV	CDI, MC
JAN#%1N4134-1	MIL-PRF-19500/435	91.0	0.25	4.2	-	TXV	CDI, MC
JAN#%1N4135-1	MIL-PRF-19500/435	100.0	0.25	3.8	-	TXV	CDI, MC
JAN#%1N4614-1	MIL-PRF-19500/435	1.8	0.25	120	S	TXV	CDI, MC
JAN#%1N4615-1	MIL-PRF-19500/435	2.0	0.25	110	S	TXV	CDI, MC
JAN#%1N4616-1	MIL-PRF-19500/435	2.2	0.25	100	S	TXV	CDI, MC
JAN#%1N4617-1	MIL-PRF-19500/435	2.4	0.25	95	S	TXV	CDI, MC
JAN#%1N4618-1	MIL-PRF-19500/435	2.7	0.25	90	S	TXV	CDI, MC

JAN#%1N4619-1	MIL-PRF-19500/435	3.0	0.25	87	S	TXV	CDI, MC
JAN#%1N4620-1	MIL-PRF-19500/435	3.3	0.25	85	S	TXV	CDI, MC
JAN#%1N4621-1	MIL-PRF-19500/435	3.6	0.25	83	S	TXV	CDI, MC
JAN#%1N4622-1	MIL-PRF-19500/435	3.9	0.25	80	S	TXV	CDI, MC
JAN#%1N4623-1	MIL-PRF-19500/435	4.3	0.25	77	S	TXV	CDI, MC
JAN#%1N4624-1	MIL-PRF-19500/435	4.7	0.25	75	S	TXV	CDI, MC
JAN#%1N4625-1	MIL-PRF-19500/435	5.1	0.25	70	S	TXV	CDI, MC
JAN#%1N4626-1	MIL-PRF-19500/435	5.6	0.25	65	S	TXV	CDI, MC, BKC
JAN#%1N4627-1	MIL-PRF-19500/435	6.2	0.25	61	S	TXV	CDI, MC, BKC

NASA Parts Selection List (NPSL)

Diodes, Silicon

Zener

Voltage Regulator, Low Noise, 500 mW at

T sub

A

=

25 **deg.C

APPLICATION NOTES:

1) Compensated Devices, Inc., is the only qualified source for the JANS product assurance level at this time.

NPSL Home Page	Parts Selection	Summary	Type

NASA Parts Selection List (NPSL)

Radiation Test:

GSFC SEU Radiation Data Bank

JPL's Radiation Data Bank

Manufacturer:

Active Supplier Assessment Program (ASAP) Core Supplier List

Part Procurement:

Part Number/Procurement details

.

Application Notes:

Applicable details

Last Update:

October 1999

Diodes, Silicon

ZENER

Voltage Reference, Low Level: P sub T = 475 mW, T sub A = 25 **deg.C

Part Number	Detail Specification	V sub Z (Nominal) (V dc) @ I sub ZT	I sub ZT (mA dc)	I sub ZM (max) (mA dc)	Level 1 (#)	Level 2 (#)	Manufacturer
JAN#%1N4565A-1	MIL-PRF-19500/452	6.4	0.5	70	S	TXV	CDI, MC
JAN#%1N4566A-1	MIL-PRF-19500/452	6.4	0.5	70	S	TXV	CDI, MC
JAN#%1N4567A-1	MIL-PRF-19500/452	6.4	0.5	70	S	TXV	CDI, MC
JAN#%1N4568A-1	MIL-PRF-19500/452	6.4	0.5	70	S	TXV	CDI, MC
JAN#%1N4569A-1	MIL-PRF-19500/452	6.4	0.5	70	S	TXV	CDI, MC
JAN#%1N4570A-1	MIL-PRF-19500/452	6.4	1.0	70	S	TXV	CDI, MC
JAN#%1N4571A-1	MIL-PRF-19500/452	6.4	1.0	70	S	TXV	CDI, MC
JAN#%1N4572A-1	MIL-PRF-19500/452	6.4	1.0	70	S	TXV	CDI, MC
JAN#%1N4573A-1	MIL-PRF-19500/452	6.4	1.0	70	S	TXV	CDI, MC
JAN#%1N4574A-1	MIL-PRF-19500/452	6.4	1.0	70	S	TXV	CDI, MC

NPSL Home Page	Parts Selection	Summary	Type

NASA Parts Selection List (NPSL)

Diodes, Silicon

Zener

Voltage Regulator, Low Level, 475 mW at

T sub

A

=

25 **deg.C

APPLICATION NOTES:

1) Microsemi Corporation and Compensated Devices, Inc., are both qualified sources for the JANS/JANTXV product assurance level.

NPSL Home Page	Parts Selection	Summary	Type

NASA Parts Selection List (NPSL)

Radiation Test:

GSFC SEU Radiation Data Bank

JPL's Radiation Data Bank

Manufacturer:

Active Supplier Assessment Program (ASAP) Core Supplier List

Part Procurement:

Part Number/Procurement details

.

Application Notes:

Applicable details

Last Update:

October 1999

Diodes, Silicon

ZENER

Voltage Regulator, Noncavity: P sub T = 500 mW, T sub A = 25 **deg.C

Part Number	Detail Specification	V sub Z (Nominal) (V dc) @ I sub ZT	I sub ZT (mA dc)	I sub ZM sub (max) sub (mA dc)	Level 1 (#)	Level 2 (#)	Manufacturer
JAN#%1N6309	MIL-PRF-19500/533	2.4	20	177	-	TXV	MC
JAN#%1N6310	MIL-PRF-19500/533	2.7	20	157	-	TXV	MC
JAN#%1N6311	MIL-PRF-19500/533	3.0	20	141	-	TXV	MC
JAN#%1N6312	MIL-PRF-19500/533	3.3	20	128	-	TXV	MC
JAN#%1N6313	MIL-PRF-19500/533	3.6	20	117	-	TXV	MC
JAN#%1N6314	MIL-PRF-19500/533	3.9	20	108	-	TXV	MC
JAN#%1N6315	MIL-PRF-19500/533	4.3	20	99	-	TXV	MC
JAN#%1N6316	MIL-PRF-19500/533	4.7	20	90	-	TXV	MC
JAN#%1N6317	MIL-PRF-19500/533	5.1	20	83	-	TXV	MC
JAN#%1N6318	MIL-PRF-19500/533	5.6	20	76	-	TXV	MC
JAN#%1N6319	MIL-PRF-19500/533	6.2	20	68	-	TXV	MC
JAN#%1N6320	MIL-PRF-19500/533	6.8	20	63	S	TXV	MC
JAN#%1N6321	MIL-PRF-19500/533	7.5	20	57	S	TXV	MC, BKC
JAN#%1N6322	MIL-PRF-19500/533	8.2	20	52	S	TXV	MC, BKC
JAN#%1N6323	MIL-PRF-19500/533	9.1	20	47	S	TXV	MC, BKC
JAN#%1N6324	MIL-PRF-19500/533	10.0	20	43	S	TXV	MC, BKC
JAN#%1N6325	MIL-PRF-19500/533	11.0	20	39	S	TXV	MC, BKC
JAN#%1N6326	MIL-PRF-19500/533	12.0	20	35	S	TXV	MC, BKC
JAN#%1N6327	MIL-PRF-19500/533	13.0	9.5	33	S	TXV	MC, BKC
JAN#%1N6328	MIL-PRF-19500/533	15.0	8.5	28	S	TXV	MC, BKC
JAN#%1N6329	MIL-PRF-19500/533	16.0	7.8	27	S	TXV	MC, BKC
JAN#%1N6330	MIL-PRF-19500/533	18.0	7.0	24	S	TXV	MC, BKC
JAN#%1N6331	MIL-PRF-19500/533	20.0	6.2	21	S	TXV	MC, BKC
JAN#%1N6332	MIL-PRF-19500/533	22.0	5.6	19	S	TXV	MC, BKC
JAN#%1N6333	MIL-PRF-19500/533	24.0	5.2	18	S	TXV	MC, BKC
JAN#%1N6334	MIL-PRF-19500/533	27.0	4.6	16	S	TXV	MC, BKC
JAN#%1N6335	MIL-PRF-19500/533	30.0	4.2	14	S	TXV	MC, BKC
JAN#%1N6336	MIL-PRF-19500/533	33.0	3.8	13	S	TXV	MC, BKC
JAN#%1N6337	MIL-PRF-19500/533	36.0	3.4	12	-	TXV	MC, BKC
JAN#%1N6338	MIL-PRF-19500/533	39.0	3.2	11	-	TXV	BKC
JAN#%1N6339	MIL-PRF-19500/533	43.0	3.0	9.9	-	TXV	BKC
JAN#%1N6340	MIL-PRF-19500/533	47.0	2.7	9.0	-	TXV	BKC
JAN#%1N6341	MIL-PRF-19500/533	51.0	2.5	8.3	-	TXV	BKC
JAN#%1N6342	MIL-PRF-19500/533	56.0	2.2	7.6	-	TXV	BKC
JAN#%1N6343	MIL-PRF-19500/533	62.0	2.0	6.8	-	TXV	BKC

JAN#%1N6344	MIL-PRF-19500/533	68.0	1.8	6.3	-	TXV	BKC
JAN#%1N6345	MIL-PRF-19500/533	75.0	1.7	5.7	-	TXV	BKC
JAN#%1N6346	MIL-PRF-19500/533	82.0	1.5	5.2	-	TXV	BKC
JAN#%1N6347	MIL-PRF-19500/533	91.0	1.4	4.7	-	TXV	BKC
JAN#%1N6348	MIL-PRF-19500/533	100.0	1.3	4.3	-	TXV	BKC
JAN#%1N6349	MIL-PRF-19500/533	110.0	1.1	3.9	-	TXV	BKC
JAN#%1N6350	MIL-PRF-19500/533	120.0	1.0	3.5	-	TXV	BKC
JAN#%1N6351	MIL-PRF-19500/533	130.0	0.95	3.3	-	TXV	BKC
JAN#%1N6352	MIL-PRF-19500/533	150.0	0.85	2.8	-	TXV	BKC
JAN#%1N6353	MIL-PRF-19500/533	160.0	0.80	2.7	-	TXV	BKC
JAN#%1N6354	MIL-PRF-19500/533	180.0	0.68	2.4	-	TXV	BKC
JAN#%1N6355	MIL-PRF-19500/533	200.0	0.65	2.1	-	TXV	BKC

NASA Parts Selection List (NPSL)

Diodes, Silicon

Zener

Voltage Regulator, Noncavity, 500 mW at

T sub

A

=

25 **deg.C

APPLICATION NOTES:

1) Microsemi Corporation is the only qualified source for the JANS product assurance level at this time.

NPSL Home Page	Parts Selection	Summary	Type

NASA Parts Selection List (NPSL)

Radiation Test:

GSFC SEU Radiation Data Bank

JPL's Radiation Data Bank

Manufacturer:

Active Supplier Assessment Program (ASAP) Core Supplier List

Part Procurement:

Part Number/Procurement details

Application Notes:

Applicable details

Last Update:

October 1999

Diodes, Silicon

ZENER

Voltage Regulator: P sub T = 1.0 W, T sub A = 25 **deg.C

Part Number	Detail Specification	V sub Z (Nominal) (V dc) @ I sub ZT	I sub ZT (mA dc)	I sub ZM sub (max) sub (mA dc)	Level 1 (#)	Level 2 (#)	Manufacturer
JAN#%1N3821A	MIL-PRF-19500/115	3.3	76	276	-	TXV	CDI, MC
JAN#%1N3822A	MIL-PRF-19500/115	3.6	69	252	-	TXV	CDI, MC
JAN#%1N3823A	MIL-PRF-19500/115	3.9	64	238	-	TXV	CDI, MC
JAN#%1N3824A	MIL-PRF-19500/115	4.3	58	213	-	TXV	CDI, MC
JAN#%1N3825A	MIL-PRF-19500/115	4.7	53	194	-	TXV	CDI, MC
JAN#%1N3826A	MIL-PRF-19500/115	5.1	49	178	-	TXV	CDI, MC
JAN#%1N3827A	MIL-PRF-19500/115	5.6	45	162	-	TXV	CDI, MC
JAN#%1N3828A	MIL-PRF-19500/115	6.2	41	146	-	TXV	CDI, MC

NPSL Home Page	Parts Selection	Summary	Type

NASA Parts Selection List (NPSL)

Diodes, Silicon

Zener

Voltage Regulator, 1.0 W at

T sub

A

=

25 **deg.C

APPLICATION NOTES:

1.0 None.

NPSL Home Page	Parts Selection	Summary	Type

NASA Parts Selection List (NPSL)

Radiation Test:

GSFC SEU Radiation Data Bank

JPL's Radiation Data Bank

Manufacturer:

Active Supplier Assessment Program (ASAP) Core Supplier List

Part Procurement:

Part Number/Procurement details

Application Notes:

Applicable details

Last Update:

October 1999

Diodes, Silicon

ZENER

Voltage Regulator: P sub T = 1.5 W, T sub A = 25 **deg.C

Part Number	Detail Specification	V sub Z (Nominal) (V dc) @ I sub ZT	I sub ZT (mA dc)	IZT (max) (mA dc)	Level 1 (#)	Level 2 (#)	Manufacturer
JAN#%1N4460	MIL-PRF-19500/406	6.2	40	40	-	TXV	MC
JAN#%1N4461	MIL-PRF-19500/406	6.8	37	37	-	TXV	MC
JAN#%1N4462	MIL-PRF-19500/406	7.5	34	34	-	TXV	MC
JAN#%1N4463	MIL-PRF-19500/406	8.2	31	31	-	TXV	MC
JAN#%1N4464	MIL-PRF-19500/406	9.1	28	28	S	TXV	MC, BKC
JAN#%1N4465	MIL-PRF-19500/406	10.0	25	25	S	TXV	MC, BKC
JAN#%1N4466	MIL-PRF-19500/406	11.0	23	23	S	TXV	MC, BKC
JAN#%1N4467	MIL-PRF-19500/406	12.0	21	21	S	TXV	MC, BKC
JAN#%1N4468	MIL-PRF-19500/406	13.0	19	19	S	TXV	MC, BKC
JAN#%1N4469	MIL-PRF-19500/406	15.0	17	17	S	TXV	MC, BKC
JAN#%1N4470	MIL-PRF-19500/406	16.0	15.5	15.5	S	TXV	MC, BKC
JAN#%1N4471	MIL-PRF-19500/406	18.0	14.0	14	S	TXV	MC, BKC
JAN#%1N4472	MIL-PRF-19500/406	20.0	12.5	12.5	S	TXV	MC, BKC
JAN#%1N4473	MIL-PRF-19500/406	22.0	11.5	11.5	S	TXV	MC, BKC
JAN#%1N4474	MIL-PRF-19500/406	24.0	10.5	10.5	S	TXV	MC, BKC
JAN#%1N4475	MIL-PRF-19500/406	27.0	9.5	9.5	S	TXV	MC, BKC
JAN#%1N4476	MIL-PRF-19500/406	30.0	8.5	8.5	S	TXV	MC, BKC
JAN#%1N4477	MIL-PRF-19500/406	33.0	7.5	7.5	S	TXV	MC, BKC
JAN#%1N4478	MIL-PRF-19500/406	36.0	7.0	40	S	TXV	MC, BKC
JAN#%1N4479	MIL-PRF-19500/406	39.0	6.5	37	S	TXV	MC, BKC
JAN#%1N4480	MIL-PRF-19500/406	43.0	6.0	33	S	TXV	MC, BKC
JAN#%1N4481	MIL-PRF-19500/406	47.0	5.5	30	S	TXV	MC, BKC
JAN#%1N4482	MIL-PRF-19500/406	51.0	5.0	28	S	TXV	MC, BKC
JAN#%1N4483	MIL-PRF-19500/406	56.0	4.5	26	S	TXV	MC, BKC
JAN#%1N4484	MIL-PRF-19500/406	62.0	4.0	23	S	TXV	MC, BKC
JAN#%1N4485	MIL-PRF-19500/406	68.0	3.7	21	S	TXV	MC, BKC
JAN#%1N4486	MIL-PRF-19500/406	75.0	3.3	19	S	TXV	MC, BKC
JAN#%1N4487	MIL-PRF-19500/406	82.0	3.0	17	S	TXV	MC, BKC
JAN#%1N4488	MIL-PRF-19500/406	91.0	2.8	16	S	TXV	MC, BKC
JAN#%1N4489	MIL-PRF-19500/406	100.0	2.5	14	S	TXV	MC, BKC
JAN#%1N4490	MIL-PRF-19500/406	110.0	2.3	13	S	TXV	MC, BKC
JAN#%1N4491	MIL-PRF-19500/406	120.0	2.0	12	S	TXV	MC, BKC
JAN#%1N4492	MIL-PRF-19500/406	130.0	1.9	11	S	TXV	MC, BKC
JAN#%1N4493	MIL-PRF-19500/406	150.0	1.7	9.5	S	TXV	MC, BKC
JAN#%1N4494	MIL-PRF-19500/406	160.0	1.6	8.9	S	TXV	MC, BKC
JAN#%1N4495	MIL-PRF-19500/406	180.0	1.4	7.9	S	TXV	MC, BKC
JAN#%1N4496	MIL-PRF-19500/406	200.0	1.2	7.2	S	TXV	MC, BKC

NASA Parts Selection List (NPSL)

Diodes, Silicon

Zener

Voltage Regulator, 1.5 W at

T sub

A

=

25 **deg.C

APPLICATION NOTES:

1) Microsemi Corporation is the only qualified source for the JANS product assurance level at this time.

NPSL Home Page	Parts Selection	Summary	Type

NASA Parts Selection List (NPSL)

Radiation Test:

GSFC SEU Radiation Data Bank

JPL's Radiation Data Bank

Manufacturer:

Active Supplier Assessment Program (ASAP) Core Supplier List

Part Procurement:

Part Number/Procurement details

Application Notes:

Applicable details

Last Update:

October 1999

Diodes, Silicon

ZENER

Voltage Regulator: P sub T = 5.0 W, T sub A = 25 **deg.C

Part Number	Detail Specification	V sub Z (Nominal) (V dc) @ I sub ZT	I sub ZT (mA dc)	I sub ZM (max) (mA dc)	Level 1 (#)	Level 2 (#)	Manufacturer
JAN#%1N4954	MIL-PRF-19500/356	6.8	175	700	S	TXV	BKC, MC
JAN#%1N4955	MIL-PRF-19500/356	7.5	175	630	S	TXV	BKC, MC
JAN#%1N4956	MIL-PRF-19500/356	8.2	150	580	S	TXV	BKC, MC
JAN#%1N4957	MIL-PRF-19500/356	9.1	150	520	S	TXV	BKC, MC
JAN#%1N4958	MIL-PRF-19500/356	10.0	125	475	S	TXV	BKC, MC

JAN#%1N4959	MIL-PRF-19500/356	11.0	125	430	S	TXV	BKC, MC
JAN#%1N4960	MIL-PRF-19500/356	12.0	100	395	S	TXV	BKC, MC
JAN#%1N4961	MIL-PRF-19500/356	13.0	100	365	S	TXV	BKC, MC
JAN#%1N4962	MIL-PRF-19500/356	15.0	75	315	S	TXV	BKC, MC
JAN#%1N4963	MIL-PRF-19500/356	16.0	75	294	S	TXV	BKC, MC
JAN#%1N4964	MIL-PRF-19500/356	18.0	65	264	S	TXV	BKC, MC
JAN#%1N4965	MIL-PRF-19500/356	20.0	65	237	S	TXV	BKC, MC
JAN#%1N4966	MIL-PRF-19500/356	22.0	50	216	S	TXV	BKC, MC
JAN#%1N4967	MIL-PRF-19500/356	24.0	50	198	S	TXV	BKC, MC
JAN#%1N4968	MIL-PRF-19500/356	27.0	50	176	S	TXV	BKC, MC
JAN#%1N4969	MIL-PRF-19500/356	30.0	40	158	S	TXV	BKC, MC
JAN#%1N4970	MIL-PRF-19500/356	33.0	40	144	S	TXV	BKC, MC
JAN#%1N4971	MIL-PRF-19500/356	36.0	30	132	S	TXV	BKC, MC
JAN#%1N4972	MIL-PRF-19500/356	39.0	30	122	S	TXV	BKC, MC
JAN#%1N4973	MIL-PRF-19500/356	43.0	30	110	S	TXV	BKC, MC
JAN#%1N4974	MIL-PRF-19500/356	47.0	25	100	S	TXV	BKC, MC
JAN#%1N4975	MIL-PRF-19500/356	51.0	25	92	S	TXV	BKC, MC
JAN#%1N4976	MIL-PRF-19500/356	56.0	20	84	S	TXV	BKC, MC
JAN#%1N4977	MIL-PRF-19500/356	62.0	20	76	S	TXV	BKC, MC
JAN#%1N4978	MIL-PRF-19500/356	68.0	20	70	S	TXV	BKC, MC
JAN#%1N4979	MIL-PRF-19500/356	75.0	20	63	S	TXV	BKC, MC
JAN#%1N4980	MIL-PRF-19500/356	82.0	15	58	S	TXV	BKC, MC
JAN#%1N4981	MIL-PRF-19500/356	91.0	15	52.5	S	TXV	BKC, MC
JAN#%1N4982	MIL-PRF-19500/356	100.0	12	47.5	S	TXV	BKC, MC
JAN#%1N4983	MIL-PRF-19500/356	110.0	12	43	S	TXV	BKC, MC
JAN#%1N4984	MIL-PRF-19500/356	120.0	10	39.5	S	TXV	BKC, MC
JAN#%1N4985	MIL-PRF-19500/356	130.0	10	36.6	S	TXV	BKC, MC
JAN#%1N4986	MIL-PRF-19500/356	150.0	8	31.6	S	TXV	BKC, MC
JAN#%1N4987	MIL-PRF-19500/356	160.0	8	29.4	S	TXV	BKC, MC
JAN#%1N4988	MIL-PRF-19500/356	180.0	5	26.4	S	TXV	MC
JAN#%1N4989	MIL-PRF-19500/356	200.0	5	23.6	S	TXV	MC
JAN#%1N4990	MIL-PRF-19500/356	220.0	5	21.6	S	TXV	MC
JAN#%1N4991	MIL-PRF-19500/356	240.0	5	19.8	S	TXV	MC
JAN#%1N4992	MIL-PRF-19500/356	270.0	5	17.5	S	TXV	MC
JAN#%1N4993	MIL-PRF-19500/356	300.0	4	15.6	-	TXV	MC
JAN#%1N4994	MIL-PRF-19500/356	330.0	4	14.4	-	TXV	MC
JAN#%1N4995	MIL-PRF-19500/356	360.0	3	13	-	TXV	MC
JAN#%1N4996	MIL-PRF-19500/356	390.0	3	12	-	TXV	MC

Voltage Regulator, 5.0 W at

T sub

A

=

25 **deg.C

APPLICATION NOTES:

1) Microsemi Corporation and BKC Semiconductors, Inc., are both qualified sources for the JANS product assurance level.

NPSL Home Page	Parts Selection	Summary	Type

NASA Parts Selection List (NPSL)

Radiation Test:

GSFC SEU Radiation Data Bank

JPL's Radiation Data Bank

Manufacturer:

Active Supplier Assessment Program (ASAP) Core Supplier List

Part Procurement:

Part Number/Procurement details

Application Notes:

Applicable details

Last Update:

October 1999

Diodes, Silicon

ZENER

Voltage Regulator: P sub T = 10 W, T sub A = 25 **deg.C

Part Number	Detail Specification	V sub Z (Nominal) (V dc) @ I sub ZT	I sub ZT (mA dc)	I sub ZM (max) (mA dc)	Level 1 (#)	Level 2 (#)	Manufacturer
JAN#%1N2970B	MIL-PRF-19500/124	6.8	370	1500	-	TXV	MC
JAN#%1N2971B	MIL-PRF-19500/124	7.5	335	1350	-	TXV	MC
JAN#%1N2972B	MIL-PRF-19500/124	8.2	305	1180	-	TXV	MC
JAN#%1N2973B	MIL-PRF-19500/124	9.1	275	1100	-	TXV	MC
JAN#%1N2974B	MIL-PRF-19500/124	10.0	250	980	-	TXV	MC
JAN#%1N2975B	MIL-PRF-19500/124	11.0	230	890	-	TXV	MC
JAN#%1N2976B	MIL-PRF-19500/124	12.0	210	820	-	TXV	MC
JAN#%1N2977B	MIL-PRF-19500/124	13.0	190	750	-	TXV	MC
JAN#%1N2979B	MIL-PRF-19500/124	15.0	170	640	-	TXV	MC
JAN#%1N2980B	MIL-PRF-19500/124	16.0	155	605	-	TXV	MC
JAN#%1N2982B	MIL-PRF-19500/124	18.0	140	525	-	TXV	MC
JAN#%1N2984B	MIL-PRF-19500/124	20.0	125	480	-	TXV	MC
JAN#%1N2985B	MIL-PRF-19500/124	22.0	115	435	-	TXV	MC
JAN#%1N2986B	MIL-PRF-19500/124	24.0	105	400	-	TXV	MC
JAN#%1N2988B	MIL-PRF-19500/124	27.0	95	340	-	TXV	MC

JAN#%1N2989B	MIL-PRF-19500/124	30.0	85	320	-	TXV	MC
JAN#%1N2990B	MIL-PRF-19500/124	33.0	75	300	-	TXV	MC
JAN#%1N2991B	MIL-PRF-19500/124	36.0	70	260	-	TXV	MC
JAN#%1N2992B	MIL-PRF-19500/124	39.0	65	240	-	TXV	MC
JAN#%1N2993B	MIL-PRF-19500/124	43.0	60	220	-	TXV	MC
JAN#%1N2995B	MIL-PRF-19500/124	47.0	55	200	-	TXV	MC
JAN#%1N2997B	MIL-PRF-19500/124	51.0	50	185	-	TXV	MC
JAN#%1N2999B	MIL-PRF-19500/124	56.0	45	170	-	TXV	MC
JAN#%1N3000B	MIL-PRF-19500/124	62.0	40	150	-	TXV	MC
JAN#%1N3001B	MIL-PRF-19500/124	68.0	37	137	-	TXV	MC
JAN#%1N3002B	MIL-PRF-19500/124	75.0	33	125	-	TXV	MC
JAN#%1N3003B	MIL-PRF-19500/124	82.0	30	115	-	TXV	MC
JAN#%1N3004B	MIL-PRF-19500/124	91.0	28	97	-	TXV	MC
JAN#%1N3005B	MIL-PRF-19500/124	100.0	25	91	-	TXV	MC
JAN#%1N3007B	MIL-PRF-19500/124	110.0	23	82	-	TXV	MC
JAN#%1N3008B	MIL-PRF-19500/124	120.0	20	77	-	TXV	MC
JAN#%1N3009B	MIL-PRF-19500/124	130.0	19	71	-	TXV	MC
JAN#%1N3011B	MIL-PRF-19500/124	150.0	17	62	-	TXV	MC
JAN#%1N3012B	MIL-PRF-19500/124	160.0	16	58	-	TXV	MC
JAN#%1N3014B	MIL-PRF-19500/124	180.0	14	52	-	TXV	MC
JAN#%1N3015B	MIL-PRF-19500/124	200.0	12	46	-	TXV	MC

NASA Parts Selection List (NPSL)

Diodes, Silicon

Zener

Voltage Regulator, 10 W at

T sub

A

=

25 **deg.C

APPLICATION NOTES:

1) No JANS qualified source exist for this product

NPSL Home Page	Parts Selection	Summary	Type

NASA Parts Selection List (NPSL)

Radiation Test:

GSFC SEU Radiation Data Bank

JPL's Radiation Data Bank

Manufacturer:

Active Supplier Assessment Program (ASAP) Core Supplier List

Part Procurement:

Part Number/Procurement details.

Application Notes:

Applicable details

Last Update:

October 1999

Diodes, Silicon

ZENER

Voltage Reference: P sub T = 500 mW, T sub A = 25 **deg.C

Part Number	Detail Specification	V sub Z (Nominal) (V dc) @ I sub ZT	I sub ZT (mA dc)	I sub ZM (max) (mA dc)	Level 1 (#)	Level 2 (#)	Manufacturer
JAN#%1N821-1	MIL-PRF-19500/159	6.2	7.5	70	S	TXV	CDI, MC
JAN#%1N823-1	MIL-PRF-19500/159	6.2	7.5	70	S	TXV	CDI, MC
JAN#%1N825-1	MIL-PRF-19500/159	6.2	7.5	70	S	TXV	CDI, MC
JAN#%1N827-1	MIL-PRF-19500/159	6.2	7.5	70	S	TXV	CDI, MC
JAN#%1N829-1	MIL-PRF-19500/159	6.2	7.5	70	S	TXV	CDI, MC
JAN#%1N935B-1	MIL-PRF-19500/156	9.0	7.5	50	-	TXV	CDI, MC
JAN#%1N937B-1	MIL-PRF-19500/156	9.0	7.5	50	-	TXV	CDI, MC
JAN#%1N938B-1	MIL-PRF-19500/156	9.0	7.5	50	-	TXV	CDI, MC
JAN#%1N939B-1	MIL-PRF-19500/156	9.0	7.5	50	-	TXV	CDI, MC
JAN#%1N941B	MIL-PRF-19500/157	11.7	7.5	39	S	TXV	CDI, MC
JAN#%1N943B	MIL-PRF-19500/157	11.7	7.5	39	S	TXV	CDI, MC

NPSL Home Page	Parts Selection	Summary	Type

NASA Parts Selection List (NPSL)

Diodes, Silicon

Zener

Voltage Reference, 500 mW at

T sub

A

=

25 **deg.C

APPLICATION NOTES:

1) Except for Compensated Devices, Inc., the other munufacturer listed is not qualified for the JANS product assurance level for the 1N823-1, 1N941B and 1N943B part numbers.

NASA Parts Selection List (NPSL)

Radiation Test:

GSFC SEU Radiation Data Bank

JPL's Radiation Data Bank

Manufacturer:

Active Supplier Assessment Program (ASAP) Core Supplier List

Part Procurement:

Part Number/Procurement details.

Application Notes:

Applicable details

Last Update:

October 1999

Diodes, Silicon

Transient Voltage Suppressor: P sub PP= 1500 W, T sub A= 25 **deg.C

Part Number	Detail Specification	V sub BR (min) (V dc) @ I sub BR	I sub BR sub (mA dc)	I sub pp (mA dc) t sub p=1ms	V sub clamp sub (max) sub at Ipp t sub p=1 ms	Level 1 (#)	Level 2 (#)
JAN#%1N5611	MIL-PRF-19500/434	43.7	1	24.0	63.5	-	TXV
JAN#%1N5629A	MIL-PRF-19500/500	6.45	10	143.0	10.5	-	TXV
JAN#%1N5630A	MIL-PRF-19500/500	7.13	10	132.0	11.3	-	TXV
JAN#%1N5631A	MIL-PRF-19500/500	7.79	10	124.0	12.1	-	TXV
JAN#%1N5632A	MIL-PRF-19500/500	8.65	1	112.0	13.4	-	TXV
JAN#%1N5633A	MIL-PRF-19500/500	9.50	1	103.0	14.5	-	TXV
JAN#%1N5634A	MIL-PRF-19500/500	10.50	1	96.0	15.6	-	TXV
JAN#%1N5635A	MIL-PRF-19500/500	11.40	1	90.0	16.7	-	TXV
JAN#%1N5636A	MIL-PRF-19500/500	12.40	1	82.0	18.2	-	TXV
JAN#%1N5637A	MIL-PRF-19500/500	14.30	1	71.0	21.2	-	TXV
JAN#%1N5638A	MIL-PRF-19500/500	15.20	1	67.0	22.5	-	TXV
JAN#%1N5639A	MIL-PRF-19500/500	17.10	1	59.5	25.2	-	TXV
JAN#%1N5640A	MIL-PRF-19500/500	19.00	1	54.0	27.7	-	TXV
JAN#%1N5641A	MIL-PRF-19500/500	20.90	1	49.0	30.6	-	TXV
JAN#%1N5642A	MIL-PRF-19500/500	22.80	1	45.0	33.2	-	TXV
JAN#%1N5643A	MIL-PRF-19500/500	25.70	1	40.0	37.5	-	TXV
JAN#%1N5644A	MIL-PRF-19500/500	28.50	1	36.0	41.4	-	TXV
JAN#%1N5645A	MIL-PRF-19500/500	31.40	1	33.0	45.7	-	TXV
JAN#%1N5646A	MIL-PRF-19500/500	34.20	1	30.0	49.9	-	TXV
JAN#%1N5647A	MIL-PRF-19500/500	37.10	1	28.0	53.9	-	TXV
JAN#%1N5648A	MIL-PRF-19500/500	40.90	1	25.3	59.3	-	TXV
JAN#%1N5649A	MIL-PRF-19500/500	44.70	1	23.2	64.8	-	TXV
JAN#%1N5650A	MIL-PRF-19500/500	48.50	1	21.4	70.1	-	TXV
JAN#%1N5651A	MIL-PRF-19500/500	53.20	1	19.5	77.0	-	TXV
JAN#%1N5652A	MIL-PRF-19500/500	58.90	1	17.7	85.0	-	TXV
JAN#%1N5653A	MIL-PRF-19500/500	64.60	1	16.3	92.0	-	TXV
JAN#%1N5654A	MIL-PRF-19500/500	71.30	1	14.6	103.0	-	TXV
JAN#%1N5655A	MIL-PRF-19500/500	77.90	1	13.3	115.0	-	TXV
JAN#%1N5656A	MIL-PRF-19500/500	86.50	1	12.0	125.0	-	TXV
JAN#%1N5657A	MIL-PRF-19500/500	95.00	1	11.0	137.0	-	TXV
JAN#%1N5658A	MIL-PRF-19500/500	105.00	1	9.9	152.0	-	TXV
JAN#%1N5659A	MIL-PRF-19500/500	114.00	1	9.1	165.0	-	TXV
JAN#%1N5660A	MIL-PRF-19500/500	124.00	1	8.4	279.0	-	TXV
JAN#%1N5661A	MIL-PRF-19500/500	143.00	1	.7.2	207.0	-	TXV
JAN#%1N5662A	MIL-PRF-19500/500	152.00	1	6.8	219.0	-	TXV
JAN#%1N5663A	MIL-PRF-19500/500	162.00	1	6.4	234.0	-	TXV
JAN#%1N5664A	MIL-PRF-19500/500	171.00	1	6.1	246.0	-	TXV
JAN#%1N5665A	MIL-PRF-19500/500	190.00	1	5.5	274.0	-	TXV
JAN#%1N5907	MIL-PRF-19500/500	6.00	1	150.0	8.5	-	TXV

Diodes, Silicon

Zener

Transient Voltage Suppressor, 1500 W at

T sub

A

=

25 **deg.C

APPLICATION NOTES:

1) Transient voltage - 1500 W peak power dissipation at 1.0 ms

NPSL Home Page	Parts Selection	Summary	Type

NASA Parts Selection List (NPSL)

Radiation Test:

GSFC SEU Radiation Data Bank

JPL's Radiation Data Bank

Manufacturer:

Active Supplier Assessment Program (ASAP) Core Supplier List

Part Procurement:

Part Number/Procurement details.

Application Notes:

Applicable details

Last Update:

October 1999

Diodes, Silicon

Transient Voltage Suppressor, Bidirectional: P sub PP = 500 W, T sub A = 25 **deg.C

Part Number	Detail Specification	V sub BR (min) (V dc)	I sub BR (mA dc)	I sub PP sub (mA dc) t sub p=1 ms	V sub clamp sub (max) sub at Ipp t sub p=1 ms	Level 1 (#)	Level 2 (#)	Manufact
JAN#%1N6103A	MIL-PRF-19500/516	7.13	175	44.6	11.2	S	TXV	SCI, SC,
JAN#%1N6104A	MIL-PRF-19500/516	7.79	150	41.3	12.1	S	TXV	SCI, SC,
JAN#%1N6105A	MIL-PRF-19500/516	8.65	150	37.3	13.4	S	TXV	SCI, SC,
JAN#%1N6106A	MIL-PRF-19500/516	9.50	125	34.5	14.5	S	TXV	SCI, SC,
JAN#%1N6107A	MIL-PRF-19500/516	10.45	125	32.0	15.6	S	TXV	SCI, SC,
JAN#%1N6108A	MIL-PRF-19500/516	11.40	100	29.6	16.9	S	TXV	SCI, SC,
JAN#%1N6109A	MIL-PRF-19500/516	12.35	100	27.5	18.2	S	TXV	SCI, SC,
JAN#%1N6110A	MIL-PRF-19500/516	14.25	75	23.8	21.0	S	TXV	SCI, SC,
JAN#%1N6111A	MIL-PRF-19500/516	15.20	75	22.4	22.3	S	TXV	SCI, SC,
JAN#%1N6112A	MIL-PRF-19500/516	17.10	65	19.9	25.1	S	TXV	SCI, SC,
JAN#%1N6113A	MIL-PRF-19500/516	19.0	65	18.0	27.7	S	TXV	SCI, SC,
JAN#%1N6114A	MIL-PRF-19500/516	20.90	50	16.4	30.5	S	TXV	SCI, SC,
JAN#%1N6115A	MIL-PRF-19500/516	22.80	50	15.0	33.3	S	TXV	SCI, SC,
JAN#%1N6116A	MIL-PRF-19500/516	25.70	50	13.4	37.4	S	TXV	SCI, SC,
JAN#%1N6117A	MIL-PRF-19500/516	28.50	40	12.0	41.6	S	TXV	SCI, SC,
JAN#%1N6118A	MIL-PRF-19500/516	31.40	40	10.9	45.7	S	TXV	SCI, SC,
JAN#%1N6119A	MIL-PRF-19500/516	34.20	30	10.0	49.9	-	TXV	SCI, SC,
JAN#%1N6120A	MIL-PRF-19500/516	37.10	30	9.3	53.6	-	TXV	SCI, SC,
JAN#%1N6121A	MIL-PRF-19500/516	40.90	30	8.5	59.1	-	TXV	SCI, SC,
JAN#%1N6122A	MIL-PRF-19500/516	44.70	25	7.7	64.4	-	TXV	SCI, SC,
JAN#%1N6123A	MIL-PRF-19500/516	48.50	25	7.1	70.1	-	TXV	SCI, SC,
JAN#%1N6124A	MIL-PRF-19500/516	53.20	20	6.5	77.0	-	TXV	SCI, SC,
JAN#%1N6125A	MIL-PRF-19500/516	58.90	20	5.9	85.3	-	TXV	SCI, SC,
JAN#%1N6126A	MIL-PRF-19500/516	64.60	20	5.1	97.1	-	TXV	SCI, SC,
JAN#%1N6127A	MIL-PRF-19500/516	71.30	20	4.8	103.1	-	TXV	SCI, SC,
JAN#%1N6128A	MIL-PRF-19500/516	77.90	15	4.4	112.8	-	TXV	SCI, SC,
JAN#%1N6129A	MIL-PRF-19500/516	86.50	15	4.0	125.1	-	TXV	SCI, SC,
JAN#%1N6130A	MIL-PRF-19500/516	95.00	12	3.6	137.6	-	TXV	SCI, SC,
JAN#%1N6131A	MIL-PRF-19500/516	104.5	12	3.3	151.3	-	TXV	SCI, SC,
JAN#%1N6132A	MIL-PRF-19500/516	114.0	10	3.0	165.1	-	TXV	SCI, SC,
JAN#%1N6133A	MIL-PRF-19500/516	123.5	10	2.8	178.8	-	TXV	SCI, SC,
JAN#%1N6134A	MIL-PRF-19500/516	142.5	8	2.4	206.3	-	TXV	SCI, SC,
JAN#%1N6135A	MIL-PRF-19500/516	152.0	8	2.3	218.4	-	TXV	SCI, SC,
JAN#%1N6136A	MIL-PRF-19500/516	171.0	5	2.0	245.7	-	TXV	SCI, SC,
JAN#%1N6137A	MIL-PRF-19500/516	190.0	5	1.8	273.0	-	TXV	SCI, SC,

NASA Parts Selection List (NPSL)

Diodes, Silicon

Transient Voltage Suppressor, Bi-directional, 500 W at

T sub

A

=

25 **deg.C

APPLICATION NOTES:

1) Microsemi Corporation is the only qualified source for the JANS product assurance level.

2) 500 W peak power dissipation at 1.0 ms

NPSL Home Page	Parts Selection	Summary	Type

NASA Parts Selection List (NPSL)

Radiation Test:

GSFC SEU Radiation Data Bank

JPL's Radiation Data Bank

Manufacturer:

Active Supplier Assessment Program (ASAP) Core Supplier List

Part Procurement:

Part Number/Procurement details

Application Notes:

Applicable details

Last Update:

October 1999

Diodes, Silicon

Transient Voltage Suppressor, Bidirectional: P sub PP

= 1500 W, T sub A = 25 **deg.C

Part Number	Detail Specification	V sub BR (min) (V dc) @ I sub BR	I sub BR sub (mA dc)	I sub pp (mA dc) t sub p=1ms	V sub clamp sub (max) sub at Ipp t sub p=1 ms	Level 1 (#)	Level 2 (#)
JAN#%1N6139A	MIL-PRF-19500/516	7.13	175	44.6	11.2	-	TXV
JAN#%1N6140A	MIL-PRF-19500/516	7.79	150	41.3	12.1	-	TXV
JAN#%1N6141A	MIL-PRF-19500/516	8.65	150	37.3	13.4	-	TXV
JAN#%1N6142A	MIL-PRF-19500/516	9.50	125	34.5	14.5	-	TXV
JAN#%1N6143A	MIL-PRF-19500/516	10.45	125	32.0	15.6	-	TXV
JAN#%1N6144A	MIL-PRF-19500/516	11.40	100	29.6	16.9	-	TXV
JAN#%1N6145A	MIL-PRF-19500/516	12.35	100	27.5	18.2	-	TXV
JAN#%1N6146A	MIL-PRF-19500/516	14.25	75	23.8	21.0	-	TXV
JAN#%1N6147A	MIL-PRF-19500/516	15.20	75	22.4	22.3	-	TXV
JAN#%1N6148A	MIL-PRF-19500/516	17.10	65	19.9	25.1	-	TXV
JAN#%1N6149A	MIL-PRF-19500/516	19.0	65	18.0	27.7	-	TXV
JAN#%1N6150A	MIL-PRF-19500/516	20.90	50	16.4	30.5	-	TXV
JAN#%1N6151A	MIL-PRF-19500/516	22.80	50	15.0	33.3	-	TXV
JAN#%1N6152A	MIL-PRF-19500/516	25.70	50	13.4	37.4	-	TXV
JAN#%1N6153A	MIL-PRF-19500/516	28.50	40	12.0	41.6	-	TXV
JAN#%1N6154A	MIL-PRF-19500/516	31.40	40	10.9	45.7	-	TXV
JAN#%1N6155A	MIL-PRF-19500/516	34.20	30	10.0	49.9	-	TXV
JAN#%1N6156A	MIL-PRF-19500/516	37.10	30	9.3	53.6	-	TXV
JAN#%1N6157A	MIL-PRF-19500/516	40.90	30	8.5	59.1	-	TXV
JAN#%1N6158A	MIL-PRF-19500/516	44.70	25	7.7	64.6	-	TXV
JAN#%1N6159A	MIL-PRF-19500/516	48.50	25	7.1	70.1	-	TXV
JAN#%1N6160A	MIL-PRF-19500/516	53.20	20	6.5	77.0	-	TXV
JAN#%1N6161A	MIL-PRF-19500/516	58.90	20	5.9	85.3	-	TXV
JAN#%1N6162A	MIL-PRF-19500/516	64.60	20	5.1	97.1	-	TXV
JAN#%1N6163A	MIL-PRF-19500/516	71.30	20	4.8	103.1	-	TXV
JAN#%1N6164A	MIL-PRF-19500/516	77.90	15	4.4	112.8	-	TXV
JAN#%1N6165A	MIL-PRF-19500/516	86.50	15	4.0	125.1	-	TXV
JAN#%1N6166A	MIL-PRF-19500/516	95.00	12	3.6	137.6	-	TXV
JAN#%1N6167A	MIL-PRF-19500/516	104.5	12	3.3	151.3	-	TXV
JAN#%1N6168A	MIL-PRF-19500/516	114.0	10	3.0	165.1	-	TXV
JAN#%1N6169A	MIL-PRF-19500/516	123.5	10	2.8	178.8	-	TXV
JAN#%1N6170A	MIL-PRF-19500/516	142.5	8	2.4	206.3	-	TXV
JAN#%1N6171A	MIL-PRF-19500/516	152.0	8	2.3	218.4	-	TXV
JAN#%1N6172A	MIL-PRF-19500/516	171.0	5	2.0	245.7	-	TXV
JAN#%1N6173A	MIL-PRF-19500/516	190.0	5	1.8	273.0	-	TXV

NASA Parts Selection List (NPSL)

Diodes, Silicon

Transient Voltage Suppressor, Bi-directional, 1500 W at

T sub

A

=

25 **deg.C

APPLICATION NOTES:

1) 1500 W peak power dissipation at 1.0 ms.

NPSL Home Page	Parts Selection	Summary	Type

NASA Parts Selection List (NPSL)

Radiation Test:

GSFC SEU Radiation Data Bank

JPL's Radiation Data Bank

Manufacturer:

Active Supplier Assessment Program (ASAP) Core Supplier List

Part Procurement:

Part Number/Procurement details

Application Notes:

Applicable details (None Available)

Last Update:

October 1999

Diodes, Silicon

FET Current Regulator

V

sub

POV

= 100 V at T sub A= 25 deg.C, P sub T = 500 mW at T sub A=25 deg.C

Part Number	Detail Specification	I sub P (mA) (Nominal) @ Vs=25 V	Z sub S (M W) @Vs=25V	Z sub K (M W) @Vk=6V	V sub L (Vdc) @I sub L sub Ip(min)	Level 1 (#)	Level 2 (#)	Manufacturer
JAN#%1N5283-1	MIL-PRF-19500/463	0.22	25.0	2.75	1.00	S	TXV	CDI
JAN#%1N5284-1	MIL-PRF-19500/463	0.24	19.0	2.35	1.00	S	TXV	CDI
JAN#%1N5285-1	MIL-PRF-19500/463	0.27	14.0	1.95	1.00	S	TXV	CDI
JAN#%1N5286-1	MIL-PRF-19500/463	0.30	9.0	1.60	1.00	S	TXV	CDI
JAN#%1N5287-1	MIL-PRF-19500/463	0.33	6.6	1.35	1.00	S	TXV	CDI
JAN#%1N5288-1	MIL-PRF-19500/463	0.39	4.10	1.00	1.05	S	TXV	CDI
JAN#%1N5289-1	MIL-PRF-19500/463	0.43	3.30	0.870	1.05	S	TXV	CDI
JAN#%1N5290-1	MIL-PRF-19500/463	0.47	2.70	0.750	1.05	S	TXV	CDI
JAN#%1N5291-1	MIL-PRF-19500/463	0.56	1.90	0.560	1.10	S	TXV	CDI
JAN#%1N5292-1	MIL-PRF-19500/463	0.62	1.55	0.470	1.13	S	TXV	CDI
JAN#%1N5293-1	MIL-PRF-19500/463	0.68	1.35	0.400	1.15	S	TXV	CDI
JAN#%1N5294-1	MIL-PRF-19500/463	0.75	1.15	0.335	1.20	S	TXV	CDI
JAN#%1N5295-1	MIL-PRF-19500/463	0.82	1.00	0.290	1.25	S	TXV	CDI
JAN#%1N5296-1	MIL-PRF-19500/463	0.91	0.880	0.240	1.29	S	TXV	CDI
JAN#%1N5297-1	MIL-PRF-19500/463	1.00	0.800	0.205	1.35	S	TXV	CDI
JAN#%1N5298-1	MIL-PRF-19500/463	1.10	0.700	0.180	1.40	S	TXV	CDI
JAN#%1N5299-1	MIL-PRF-19500/463	1.20	0.640	0.155	1.45	S	TXV	CDI
JAN#%1N5300-1	MIL-PRF-19500/463	1.30	0.580	0.135	1.50	S	TXV	CDI
JAN#%1N5301-1	MIL-PRF-19500/463	1.40	0.540	0.115	1.55	S	TXV	CDI
JAN#%1N5302-1	MIL-PRF-19500/463	1.50	0.510	0.105	1.60	S	TXV	CDI
JAN#%1N5303-1	MIL-PRF-19500/463	1.60	0.475	0.092	1.65	S	TXV	CDI
JAN#%1N5304-1	MIL-PRF-19500/463	1.80	0.420	0.074	1.75	S	TXV	CDI
JAN#%1N5305-1	MIL-PRF-19500/463	2.00	0.395	0.061	1.85	S	TXV	CDI
JAN#%1N5306-1	MIL-PRF-19500/463	2.20	0.370	0.052	1.95	S	TXV	CDI
JAN#%1N5307-1	MIL-PRF-19500/463	2.40	0.345	0.044	2.00	S	TXV	CDI
JAN#%1N5308-1	MIL-PRF-19500/463	2.70	0.320	0.035	2.15	S	TXV	CDI
JAN#%1N5309-1	MIL-PRF-19500/463	3.00	0.300	0.029	2.25	S	TXV	CDI
JAN#%1N5310-1	MIL-PRF-19500/463	3.30	0.280	0.024	2.35	S	TXV	CDI
JAN#%1N5311-1	MIL-PRF-19500/463	3.60	0.265	0.020	2.50	S	TXV	CDI
JAN#%1N5312-1	MIL-PRF-19500/463	3.90	0.255	0.017	2.60	S	TXV	CDI
JAN#%1N5313-1	MIL-PRF-19500/463	4.30	0.245	0.014	2.75	S	TXV	CDI
JAN#%1N5314-1	MIL-PRF-19500/463	4.70	0.235	0.012	2.90	S	TXV	CDI

NASA Parts Selection List (NPSL)

Diodes, Silicon

FET Current Regulator

APPLICATION NOTES:

Not available

NASA Parts Selection List (NPSL)

Radiation Test:

GSFC SEU Radiation Data Bank

JPL's Radiation Data Bank

Manufacturer:

Active Supplier Assessment Program (ASAP) Core Supplier List

Part Procurement:

Part Number/Procurement details

Application Notes:

Application Considerations: Handling/ESD Sensitivity!!!

Last Update:

July 26, 2001

Diodes, Silicon

Schottky Barrier Rectifier

Part Number	Detail Specification	V sub RM (V pk)	V sub F Tc=25 deg.C (V dc)	I sub F (pk) (mA)	Level 1 (#)	Level 2 (#)	Manufacturer
JAN#%1N5711	MIL-PRF-19500/444	50	1.0	15	-	TXV	CDI
JAN#%1N5712	MIL-PRF-19500/445	16	1.0	35	-	TXV	CDI
JAN#%1N6391	MIL-PRF-19500/553	45	0.68	50A	-	TXV	MC
JAN#%1N6392	MIL-PRF-19500/554	45	0.82	120A	-	TXV	MC, IRC

NPSL Home Page

Parts Selection

Summary

Type

NASA Parts Selection List (NPSL)

Diodes, Silicon

Schottky Barrier

APPLICATION NOTES:

1.0 The 1N5711 and the 1N5712 are hot carrier diodes.

2.0 The 1N5711 and 1N5712 type diodes are EXTREMELY sensitive to handling and ESD damage. This susceptibility is inherent in the design of these diode types due to the very small semiconductor junction area used to meet the "low" capacitance specification requirement combined with the rigid metallurgical bond utilized in their construction. The only manufacturer of this device type,

Compensated Devices Inc.

, has published application notes related to this sensitivity. Users are strongly urged to review the supplier's application notes prior to selecting and using either of these

diode types.

CDI Technical Bulletin TB-001

:1N5711-1/1N5711UR-1/ CDLL5711 HANDLING AND ASSEMBLY GUIDELINES (COMM, JAN, JANTX, JANTXV, CDS PRODUCT)

CDI Technical Bulletin TB-002:

1N5712-1/1N5712UR-1/CDLL5712/CDLL2810 HANDLING AND ASSEMBLY GUIDELINES (COMM, JAN, JANTX, JANTXV, CDS PRODUCT)

Revision History for Schottky Barrier Diode Listing in the NPSL

07/26/01	Added Application Note Warning of Extreme Handling and ESD Sensitivity of the 1N5711 and 1N5712 Diode Types
October 1999	Initial Release of Schottky Barrier Diode Listing in the NPSL

NASA Parts Selection List (NPSL)

Radiation Test:

GSFC SEU Radiation Data Bank

JPL's Radiation Data Bank

Manufacturer:

Active Supplier Assessment Program (ASAP) Core Supplier List

Part Procurement:

Part Number/Procurement details

Application Notes:

Applicable details

Last Update:

October 1999

Diodes, Silicon

Thyristors

(Silicon Controlled Rectifier)

Part Number	Detail Specification	V sub RM (V dc pk)	I sub O T sub A=80 deg.C (A dc)	V sub GT sub (V dc) sub (max) sub @I sub GT	I sub GT sub (mA dc)	Level 1 (#)	Level 2 (#)	Manufact
JAN#%2N2323A	MIL-PRF-19500/276	50	1.0	0.8	75	-	TXV	MC
JAN#%2N2324A	MIL-PRF-19500/276	100	1.0	0.8	75	-	TXV	MC
JAN#%2N2326A	MIL-PRF-19500/276	200	0.68	0.8	75	-	TXV	MC
JAN#%2N2328A	MIL-PRF-19500/276	300	0.82	0.8	75	-	TXV	MC

NPSL Home Page	Parts Selection	Summary	Type

NASA Parts Selection List (NPSL)

Diodes, Silicon

Thyristors (Controlles Rectifiers)

APPLICATION NOTES:

1.0 Except for non-cavity diodes, all JANTXV diodes must be 100 percent PIND tested in accordance with MIL-STD-750, Method 2052, Condition A.

NPSL Parts Selection List (NPSL)

Silicon Diode Manufacturer Listing

Click

here

for additional information regarding parts technologies offered by these manufacturers listed in the ASAP Core Suppliers List.

Listed below are links to manufacturer data sites that may provide additional part related information. The linked sites are not under the control of NPSL and NASA is not responsible for information contained in the linked site. These links are provided for your convenience only.

APD

American Power Devices

69 Bennet Street

Lynn, MA 01905-3003

Cage Code: 50273

Phone No: 617.592.6090

BKC

BKC Semiconductors, Inc (aka Microsemi Ireland Limited)

6 Lake Street

Lawrence, MA 01841-3011

Cage Code:SD633

Phone No: 508.681.0392

CDI

Compensated Devices, Inc.

166 Tremont Street

Melrose, MA 02176-2296

Cage Code: 55801

Phone No: 617.665.1071 x120

IRC

International Rectifier Corporation

Semiconductor Division

233 Kansas Street

El Segundo, CA 90245-4382

Cage Code: 59993

Phone No: 310.607.8883

KSI

Knox Semiconductor, Inc.

P.O.Box 609

Rockport, ME 04856-9999
Cage Code: 61322
Phone No: 207.236.6076
LINF
Linfinity Microelectronics, Inc.
11861 Western Avenue
Garden Grove, CA 92641-2119
Cage Code: 34333
Phone No: 714.898.8121
M/A
M/A-COM, Inc.
1011 Pawtucket Blvd.
P.O.Box 3295
Lowell, MA 01853-3295
Cage Code: 96341
Phone No: 617.564.3038
MI
Micropac Industries, Inc.
P.O.Box 469017
Garland, TX 75046-9017
Cage Code: 31757
Phone No: 214.272.3571 x274
MC
Microsemi Corporation - Scottsdale Division (1)
8700 East Thomas Rd
Scottsdale, AZ 85252-1008
Cage Code: 12954
Phone No: 602.941.6488
MC
Microsemi Corporation - Santa Ana Division (2)
2830 South Fairview Street
Santa Ana, CA 92704-1390
Cage Code: 14552
Phone No: 714.979.8220 X295
MC
Microsemi Corporation - Colorado Division (3)
800 Hoyt Street
Broomfield, CO 80020-1008
Cage Code: 59377
Phone No: 303.469.2161 X220

MC
Microsemi Corporation - Watertown Division (4)
580 Pleasant Street
Watertown, MA 02172-2497
Cage Code: 12969
Phone No: 617.926.0404
SCI (site not available)
Semicon Components, Inc.
10 North Avenue
Burlington, MA 01803-3396
Cage Code: 11961
Phone No: 617.272.9015
SC
Semtech Corporation
652 Mitchell Road
Newbury Park, CA 91320-2289
Cage Code: 14099
Phone No: 805.498.2111 x251
SS
Sensitron Semiconductor
Division of RSM Electron power, Inc.
221 West Industry Court
Deer Park, NY 11729-4681
Cage Code: 13409
Phone No: 516.586.7600 x230
STC (site not available)
Silicon Transistor Corporation
Katrina Road
Chelmsford, MA 01824-2842
Cage Code: 07256
Phone Number: 508.256.3321
VMI
Voltage Multipliers, Inc.
8711 West Roosevelt Avenue
Visalia, CA 93291-9458
Cage Code: 60211
Phone No: 209.651.1402 x15
NPSL Home Page
Parts Selection
Summary

Type

NASA Parts Selection List (NPSL)

NOTE: Unless specifically stated within the parts selection tables of the NPSL, listing of a device technology herein does NOT imply/guarantee Radiation Hardness Assurance (RHA). Applications concerned with a device's ability to tolerate exposure to various forms of space radiation (e.g., total ionizing dose, single event effects, etc.) should be reviewed and have the device assessed by the Program's radiation assurance experts. The following resources may also be consulted for initial guidance:

NASA Goddard Radiation Effects and Analysis

Jet Propulsion Laboratory Radiation Effects

Transistor Types

The following MIL-PRF-19500 transistor types are available for selection:

Type	Description
	LOW POWER
NPN	Transistor, Silicon, 0.3-2.0 W
NPN	Transistor, Silicon, Chopper, High Speed, 0.3 W

NPN	Transistor, Silicon, Matched Pair, 0.5-0.6 W
PNP	Transistor, Silicon, 0.2-1.5 W
PNP	Transistor, Silicon, Chopper, High Speed, 0.4 W
PNP	Transistor, Silicon, Matched Pair, 0.6 W
NPN/PNP	Transistor, Dual, Complementary
	HIGH POWER
NPN	Transistor, Silicon, 5.0-350 W
	Transistor, Silicon, Darlington, 5 - 175 W
PNP	Transistor, Silicon, 14-115 W
PNP	Transistor, Silicon, Darlington, 32 - 85 W
	FIELD EFFECT TRANSISTOR (FET)
N-Channel	Field Effect Transistor (FET), 0.3 - 0.4 W
N-Channel	MOSFET, Power, 1.4 - 150 W
P-Channel	Field Effect Transistor (FET), 0.5 - 4.0 W
P-Channel	MOSFET, Power, 6.25 - 125 W
	RADIO FREQUENCY (RF)
NPN	Transistor, Silicon, 0.2 - 1.0 W
PNP	Transistor, Silicon, 0.2 W
OPTOCOUPLER	Optically Coupled Isolators, < 1.0 W
NASDA-QTS-19500	Transistors

NOTE:

The activity responsible for the MIL-PRF-19500 qualified parts is the Defense Supply Center Columbus (DSCC).

The activity responsible for the QTS-19500A qualified parts is the National Space Development Agency of Japan (NASDA).

Help

|

Search

NEPP Program Manager:

Chuck Barnes, Jet Propulsion Laboratory

Responsible NASA Official:

Michael Sampson, NEPAG Manager

Website Comments:

Web Development Team

Last Modified:

August 8, 2001

AETD IT Security Banner

NASA Privacy Statement

NASA Parts Selection List (NPSL)

Radiation Test:

GSFC SEU Radiation Data Bank

JPL's Radiation Data Bank

Manufacturer:

Active Supplier Assessment Program (ASAP) Core Suppliers List

Part Procurement:

Part Number/Procurement details

Application Notes:

Applicable details

Last Update:

March 1998

Transistors, Silicon

Chopper, NPN, High Speed,

P

sub

T

@ T sub A = 25

deg.

C

, 0.

3 W

Part Number	Detail Specification MIL-PRF-19500/	I sub C (mA)	V sub CBO(V)	V sub CEO(V)	h sub FE Min/Max	h sub FE I sub C(A)	Level 1	Level 2, 3	Manufacturer

JAN#@2N2432	313	100	100	100	40/120	1.0	S	TXV	NES

NPSL Home Page

Parts Selection

Summary

Type

NASA Parts Selection List (NPSL)

Application Notes

Transistors, Silicon

Chopper, NPN

1. Derate linearly 4.0 mW/deg.C above for T sub A = +25 deg.C

2. All JANTXV transistors must be PIND tested in accordance with MIL-STD-750, Method 2052, Condition A. Additional testing is not required when procured directly from the manufacturer with PIND testing in accordance with MIL-PRF-19500.

NPSL Home Page

Parts Selection

Summary

Type

NASA Parts Selection List (NPSL)

Radiation Test:

GSFC SEU Radiation Data Bank

JPL's Radiation Data Bank

Manufacturer:

Active Supplier Assessment Program (ASAP) Core Suppliers List

Part Procurement:

Part Number/Procurement details

Application Notes:

Applicable details

Last Update:

March 1998

Transistors, Silicon

Chopper, PNP,

P sub T @ T sub A = 25 deg.C, 0.4 W

Part Number		Detail Specification MIL-PRF-19500/	I sub C (mA)	V sub CBO (V)		V sub CEO (V)	h sub FE Min/Max	h sub FE I sub C sub (mA)		Level 1	Level 1, 2	Manufacturer
JAN#@2N2945A		382	-100	-25		-20	70/-	-1.0		-	TXV	MC

NPSL Home Page

Parts Selection

Summary

Type

NASA Parts Selection List (NPSL)

Application Notes

Transistors, Silicon

Chopper, PNP

1. Derate linearly 2.3 mW/deg.C above T sub A = +25 deg.C

2. All JANTXV transistors must be PIND tested in accordance with MIL-STD-750, Method 2052, Condition A. Additional testing is not required when procured directly from the manufacturer with PIND testing in accordance with MIL-PRF-19500.

NPSL Home Page

Parts Selection

Summary

Type

NASA Parts Selection List (NPSL)

Radiation Test:

GSFC SEU Radiation Data Bank

JPL's Radiation Data Bank

Manufacturer:

Active Supplier Assessment Program (ASAP) Core Suppliers List

Part Procurement:

Part Number/Procurement details

Application Notes:

Applicable details

Last Update:

March 1998

Transistors, Silicon

NPN, Darlington, P sub T

@

T sub C =100 deg.C, 5.0 - 175 W

Part Number	Detail Specification MIL-PRF-19500/	I sub C (A)	V sub CBO(V)	V sub CEO(V)	V sub EBO(V)	h sub FE Min/Max X1000	h sub FE at Ic (A)	Level 1	Level 2, 3	Manufacturer
JAN#@2N6283	504	20	80	80	7	1.25/18	10	S	TXV	NES
JAN#@2N6284	504	20	100	100	7	1.25/18	10	S	TXV	NES

JAN#@2N6301	539	8	80	80	5	0.75/18	4	S	TXV	NES, STC
JAN#@2N6350	472	5	80	80	12	2/10	5	S	TXV	API, NES, STC
JAN#@2N6351	472	5	150	150	12	1/10	5	S	TXV	API, NES, STC
JAN#@2N6352	472	5	80	80	12	2/10	5	S	TXV	API, NES, STC
JAN#@2N6353	472	5	150	150	12	1/10	5	S	TXV	API, NES, STC
JAN#@2N6384	523	10	60	60	5	1/20	5	S	TXV	NES
JAN#@2N6385	523	10	80	80	5	1/20	5	S	TXV	NES

NPSL Home Page

Parts Selection

Summary

Type

NASA Parts Selection List (NPSL)

Application Notes

Transistors, Silicon

NPN, Darlington

1. For appropriate power derating factor, refer to the detailed part specification.

2. All JANTXV transistors must be PIND tested in accordance with MIL-STD-750, Method 2052, Condition A. Additional testing is not required when procured directly from the manufacturer with PIND testing in accordance with MIL-PRF-19500.

NPSL Home Page

Parts Selection

Summary

Type

NASA Parts Selection List (NPSL)

Radiation Test:

GSFC SEU Radiation Data Bank

JPL's Radiation Data Bank

Manufacturer:

Active Supplier Assessment Program (ASAP) Core Suppliers List

Part Procurement:

Part Number/Procurement details

Application Notes:

Applicable details

Last Update:

March 1998

Transistors

PNP, Darlington, P sub T

@

T sub C =100

deg.

C, 32 - 85 W

Part Number	Detail Specification MIL-PRF-19500/	I sub C (A)	V sub CBO (V)	V sub CEO (V)	V sub EBO (V)	h sub FE Min/Max X1000	h sub FE at Ic (A)	Level 1	Level 2, 3	Manufacturer
JAN#@2N6299	540	8	80	80	5	0.75/18	4	S	TXV	NES, STC
JAN#@2N6649	527	10	60	60	5	1/20	5	S	TXV	NES
JAN#@2N6650	527	10	80	80	5	1/20	5	S	TXV	NES

NPSL Home Page

Parts Selection

Summary

Type

NASA Parts Selection List (NPSL)

Application Notes

Transistors, Silicon

PNP, Darlington

1. Derate the /540 parts linearly at 0.428 W/deg.C for T sub C > 0 deg.C

2.0 Derate the /527 parts linearly at 567 mW/deg.C for T sub C > +25 deg.C

3. All JANTXV transistors must be PIND tested in accordance with MIL-STD-750, Method 2052, Condition A. Additional testing is not required when procured directly from the manufacturer with PIND testing in accordance with MIL-PRF-19500.

NPSL Home Page

Parts Selection

Summary

Type

NASA Parts Selection List (NPSL)

Radiation Test:

GSFC SEU Radiation Data Bank

JPL's Radiation Data Bank

Manufacturer:

Active Supplier Assessment Program (ASAP) Core Suppliers List

Part Procurement:

Part Number/Procurement details

Application Notes:

Applicable details

Last Update:

March 1998

Transistors, DUAL, NPN/PNP

Complementary,

P

sub

T

@ T sub A =100

deg.

C, Each Side 0.3/0.6 W

Part Number	Detail Specification MIL-PRF-19500/	I sub C (A)	V sub CBO (V)	V sub CEO (V)	V sub BEO (V)	h sub FE Min/Max	h sub FE Ic (A)	Level 1	Level 2, 3	Manufacturer
JAN#@2N4854U	421	0.6	60	40	5	100/300	0.15	S	TXV	OTI

NPSL Home Page

Parts Selection

Summary

Type

NASA Parts Selection List (NPSL)

Application Notes

Transistors, DUAL, NPN/PNP

Complementary

1. Derate 1.71 mW/deg.C for T sub C > +25 deg.C

2. All JANTXV transistors must be PIND tested in accordance with MIL-STD-750, Method 2052, Condition A. Additional testing is not required when procured directly from the manufacturer with PIND testing in accordance with MIL-PRF-19500.

NPSL Home Page

Parts Selection

Summary

Type

NASA Parts Selection List (NPSL)

Radiation Test:

GSFC SEU Radiation Data Bank

JPL's Radiation Data Bank

Manufacturer:

Active Supplier Assessment Program (ASAP) Core Suppliers List

Part Procurement:

Part Number/Procurement details

Application Notes:

Applicable details

Last Update:

March 1998

Field Effect Transistor (FET), Silicon

N-Channel, P sub T

@

T sub A =25

deg.

C, 0.3 - 0.4 W

Part Number	Detail Specification MIL-PRF-19500/	I sub G (mA)	V sub DG (V)	V sub DS (V)	V sub GS (V)	Level 1	Level 2, 3	Manufacturer
JAN#@2N3821	375	10	50	50	-50	-	TXV	SDI
JAN#@2N3822	375	10	50	50	-50	-	TXV	SDI
JAN#@2N3823	375	10	30	30	-30	-	TXV	SDI
JAN#@2N4856	385	50	40	40	-40	-	TXV	SDI
JAN#@2N4857	385	50	40	40	-40	-	TXV	SI, SDI
JAN#@2N4858	385	50	40	40	-40	-	TXV	SI, SDI
JAN#@2N4859	385	50	30	30	-30	-	TXV	SI, SDI
JAN#@2N4860	385	50	30	30	-30	-	TXV	SI, SDI
JAN#@2N4861	385	50	30	30	-30	-	TXV	SI, SDI
JAN#@2N5545	430	30	50	50	-50	S	TXV	SI, SDI
JAN#@2N5546	430	30	50	50	-50	S	TXV	SI, SDI
JAN#@2N5547	430	30	50	50	-50	-	TXV	SI, SDI

NPSL Home Page

Parts Selection

Summary

Type

NASA Parts Selection List (NPSL)

Application Notes

Field Effect Transistor (FET)

N-Channel

1. Refer to detailed part specification for applicable power derating factors.

2. All JANTXV transistors must be PIND tested in accordance with MIL-STD-750, Method 2052, Condition A. Additional testing is not required when procured directly from the manufacturer with PIND testing in accordance with MIL-PRF-19500.

NPSL Home Page

Parts Selection

Summary

Type

NASA Parts Selection List (NPSL)

Radiation Test:

GSFC SEU Radiation Data Bank

JPL's Radiation Data Bank

Manufacturer:

Active Supplier Assessment Program (ASAP) Core Suppliers List

Part Procurement:

Part Number/Procurement details

Application Notes:

Applicable details

Last Update:

March 1998

Field Effect Transistor (FET),

P-Channel, P sub

T

@

T sub A = 25 deg.C, 0.5 W -

4.0 W

Part Number	Detail Specification MIL-PRF-19500/	I sub G (mA)	V sub DG (V)	V sub DS (V)	V sub GS (V)	Level 1	Level 1, 2	Manufacturer
JAN#@2N5114	476	50	30	30	30	-	TXV	SI, SDI
JAN#@2N5115	476	50	30	30	30	-	TXV	SI, SDI
JAN#@2N5116	476	50	30	30	30	-	TXV	SI, SDI

NPSL Home Page

Parts Selection

Summary

Type

NASA Parts Selection List (NPSL)

Application Notes

Field Effect Transistor (FET)

P-Channel

1. Derate 3.0 mW/deg.C for T sub A > +25 deg.C

2. Symmetrical geometry allows operation of these devices with source/drain leads interchanged.

3. All JANTXV transistors must be PIND tested in accordance with MIL-STD-750, Method 2052, Condition A. Additional testing is not required when procured directly from the manufacturer with PIND testing in accordance with MIL-PRF-19500.

NPSL Home Page

Parts Selection

Summary

Type

NASA Parts Selection List (NPSL)

Radiation Test:

GSFC SEU Radiation Data Bank

JPL's Radiation Data Bank

Manufacturer:

Active Supplier Assessment Program (ASAP) Core Suppliers List

Part Procurement:

Part Number/Procurement details

Application Notes:

Applicable details

Last Update:

March 1998

Transistors, Silicon

NPN, High Power, P sub T

@

T sub c = 100

deg.

C, 5 - 350 W

Part Number	Detail Specification MIL-PRF-19500/	I sub C (A)	V sub CBO (V)	V sub CEO (V)	V sub EBO (V)	h sub FE Min/Max	h sub FE at Ic (A)	Level 1	Level 2, 3	Manufacturer
JAN#@2N2151	277	2	150	100	6.0	40/120	1.0	-	TX	MC
JAN#@2N2814	415	10	120	80	5.5	50/150	1.0	-	TXV	API
JAN#@2N2880	315	5	110	80	8.0	40/120	1.0	S	TXV	API, MC
JAN#@2N3442	370	10	160	140	7.0	20/70	3.0	-	TXV	API
JAN#@2N3585	384	2	500	300	7.0	25/100	1.0	-	TXV	API, NES, STC
JAN#@2N3716	408	10	100	80	7.0	30/120	3.0	-	TXV	NES, STC
JAN#@2N3739	402	3	325	300	6.0	40/200	0.1	-	TXV	NES, STC
JAN#@2N3749	315	5	110	80	8.0	40/120	1.0	S	TXV	API, MC, STC, SDI
JAN#@2N3767	518	4	100	80	6.0	40/160	0.5	-	TXV	NES, STC
JAN#@2N3879	526	7	120	75	8.0	20/180	4.0	-	TXV	MC, NES, STC
JAN#@2N3996	374	5	100	80	8.0	40/120	1.0	S	TXV	API, MC, NES, STC, SDI
JAN#@2N3997	374	5	100	80	8.0	80/240	1.0	S	TXV	API, MC, NES, STC, SDI
JAN#@2N5004	534	5	100	80	6.0	70/200	2.5	S	TXV	MC, SS
JAN#@2N5038	439	20	150	90	7.0	50/200	2.0	S	TXV	MC, NES, SS
JAN#@2N5039	439	20	125	75	7.0	30/150	2.0	S	TXV	MC, NES, SS
JAN#@2N5157	371	3.5	700	500	7.0	30/90	1.0	-	TX	MC, STC, SDI
JAN#@2N5237	394	10	150	120	7.0	40/120	5.0	S	TXV	API, MC, NES, SS, STC
JAN#@2N5238	394	10	200	170	7.0	40/120	5.0	S	TXV	API, MC, NES, SS, STC
JAN#@2N5250	380	50	125	100	10	15/60	40.0	-	TXV	SDI
JAN#@2N5251	380	50	180	150	10	15/60	40.0	-	TXV	SDI
JAN#@2N5302	456	30	60	60	5.0	15/60	15.0	-	TXV	STC
JAN#@2N5303	456	30	80	80	5.0	15/60	10.0	-	TXV	STC
JAN#@2N5660	454	2	250	200	6.0	40/120	0.5	-	TXV	MC, NES, STC, SS
JAN#@2N5664	455	5	250	200	6.0	40/120	1.0	S	TXV	API, MC, NES, SS, STC, SDI
JAN#@2N5665	455	5	400	300	6.0	25/75	1.0	S	TXV	API, MC, NES,SS, STC, SDI
JAN#@2N5666	455	5	250	200	6.0	40/120	0.5	S	TXV	NES, SS, STC, SDI, MC
JAN#@2N5667	455	5	400	300	6.0	40/120	1.0	S	TXV	NES, SS, STC, SDI, MC
JAN#@2N5672	488	30	150	120	7.0	20/100	15	-	TXV	NES
JAN#@2N5685	464	50	60	60	5.0	15/60	25	-	TXV	NES, STC
JAN#@2N5686	464	50	80	80	5.0	15/60	25	-	TXV	NES, STC
JAN#@2N6033	528	40	150	120	8.0	10/50	40	-	TXV	NES
JAN#@2N6249	510	10	300	200	6.0	10/50	10.0	-	TXV	MC, STC
JAN#@2N6250	510	10	375	275	6.0	8/50	10	S	TXV	MC, STC
JAN#@2N6251	510	10	450	350	9.0	6/50	10	S	TXV	MC, STC
JAN#@2N6308	498	8	700	350	8.0	3/-	8.0	-	TXV	SDI
JAN#@2N6338	509	25	120	100	5.0	30/120	10.0	S	TXV	MC, NES, STC
JAN#@2N6546	525	15	-	300	9.0	12/60	1.0	-	TXV	MC, SDI
JAN#@2N6547	525	15	-	400	7.0	10/60	5.0	-	TXV	MC, SDI
JAN#@2N6676	538	15	450	300	7.0	15/40	1.0	-	TXV	NES
JAN#@2N6678	538	15	650	400	6.0	15/40	1.0	-	TXV	NES

Type

NASA Parts Selection List (NPSL)

Application Notes

Transistors, Silicon

NPN, High Power

1. Refer to detailed part specification for applicable power derating factors for operation beyond the specified case temperature.

2. All JANTXV transistors must be PIND tested in accordance with MIL-STD-750, Method 2052, Condition A. Additional testing is not required when procured directly from the manufacturer with PIND testing in accordance with MIL-PRF-19500.

NPSL Home Page

Parts Selection

Summary

Type

NASA Parts Selection List (NPSL)

Radiation Test:	GSFC SEU Radiation Data Bank
	JPL's Radiation Data Bank
Manufacturer:	Active Supplier Assessment Program (ASAP) Core Suppliers List
Part Procurement:	Part Number/Procurement details
Application Notes:	Applicable details
Last Update:	March 1998

Transistors, Silicon

PNP, High Power, P sub T

@

T sub C = 100

deg.

C, 14 - 115 W

Part Number	Detail Specification MIL-PRF-19500/	I sub C (A)	V sub CBO (V)	V sub CEO (V)	V sub EBO (V)	h sub FE Min/Max	h sub FE at Ic (A)	Level 1	Level 2, 3	Manufacturer
JAN#@2N3740	441	4	60	60	7.0	30/120	0.25	S	TXV	MC, NES, STC, SDI
JAN#@2N3741	441	4	80	80	7.0	30/100	0.25	S	TXV	MC, NES, STC, SDI
JAN#@2N3792	379	10	80	80	7.0	30/120	3.0	-	TXV	NES
JAN#@2N4399	433	30	60	60	5.0	15/60	15.0	-	TXV	NES
JAN#@2N5005	535	10	100	80	5.5	70/200	2.5	S	TXV	MC, SS
JAN#@2N5683	466	50	60	60	5.0	15/60	25.0	-	TXV	NES
JAN#@2N5684	466	50	80	80	5.0	15/60	25.0	-	TXV	NES
JAN#@2N5745	433	20	80	80	5.0	15/60	10.0	-	TXV	NES
JAN#@2N6211	461	4	80	80	6.0	30/175	1.0	S	TXV	MC, NES
JAN#@2N6212	461	2	350	300	6.0	35/175	1.0	S	TXV	MC, NES

JAN#@2N6213	461	2	400	350	6.0	30/175	1.0	S	TXV	MC, NES
JAN#@2N6438	508	25	140	120	6.0	25/100	10.0	-	TXV	MC

NPSL Home Page

Parts Selection

Summary

Type

NASA Parts Selection List (NPSL)

Application Notes

Transistors, Silicon

PNP, High Power

1. Refer to detailed part specification for applicable ambient or case temperature power derating factors.

2. All JANTXV transistors must be PIND tested in accordance with MIL-STD-750, Method 2052, Condition A. Additional testing is not required when procured directly from the manufacturer with PIND testing in accordance with MIL-PRF-19500.

NPSL Home Page

Parts Selection

Summary

Type

NASA Parts Selection List (NPSL)

Radiation Test:

GSFC SEU Radiation Data Bank

JPL's Radiation Data Bank

Manufacturer:

Active Supplier Assessment Program (ASAP) Core Suppliers List

Part Procurement:

Part Number/Procurement details

Application Notes:

Applicable details

Last Update:

March 1998

Transistors, Silicon

NPN, Low Power, P sub T

@

T sub A = 25

deg.

C, 0.5 - 0.6 W

Matched Pair

Part Number	Detail Specification MIL-PRF-19500/	I sub C (A)	V sub CBO (V)	V sub CEO (V)	V sub EBO (V)	h sub FE (Min/ Max)	h sub FE at Ic (mA)	Level 1	Level 2, 3	Manufacturer
JAN#@2N2060	270	0.5	100	60	7	40/120	1.0	-	TXV	MC, NES
JAN#@2N2060L	270	0.5	100	60	7	40/120	1.0	-	TXV	MC, NES
JAN#@2N2919	355	0.03	70	60	6	60/240	0.01	-	TXV	MC, NES
JAN#@2N2919L	355	0.03	70	60	6	60/240	0.01	-	TXV	MC, NES
JAN#@2N2920	355	0.03	70	60	6	175/600	0.01	-	TXV	MC, NES
JAN#@2N2920L	355	0.03	70	60	6	175/600	0.01	-	TXV	MC, NES

NPSL Home Page

Parts Selection

Summary

Type

NASA Parts Selection List (NPSL)

Application Notes

Transistors, Silicon

NPN, Low Power

Matched Pair, 0.5 - 0.6 W

1. Refer to the detailed specification sheet for applicable power derating factors.

2. All JANTXV transistors must be PIND tested in accordance with MIL-STD-750, Method 2052, Condition A. Additional testing is not required when procured directly from the manufacturer with PIND testing in accordance with MIL-PRF-19500.

NPSL Home Page

Parts Selection

Summary

Type

NASA Parts Selection List (NPSL)

Radiation Test:

GSFC SEU Radiation Data Bank

JPL's Radiation Data Bank

Manufacturer:

Active Supplier Assessment Program (ASAP) Core Suppliers List

Part Procurement:

Part Number/Procurement details

Application Notes:

Applicable details

Last Update:

Transistors, Silicon

NPN, Low Power, P sub

T

@ T sub A = 25 deg.C, 0.3 - 2 W

Part Number	Detail Specification MIL-PRF-19500/	I sub C (A)	V sub CBO (V)	V sub CEO (V)	V sub EBO (V)	h sub FE (Min/ Max)	h sub FE at Ic (mA)	Level 1	Level 2, 3	Manufacturer
JAN#@2N2219	251	0.8	60	30	5.0	50/325	1.0	S	TXV	MC
JAN#@2N2219A	251	0.8	75	50	6.0	75/325	1.0	S	TXV	MC, NES, SS, STC
JAN#@2N2219AL	251	0.8	75	75	6.0	75/325	1.0	S	TXV	MC, NES, SS, STC
JAN#@2N2222A	255	0.8	75	50	6.0	75/325	1.0	S	TXV	MI, MC, NES OTI, STC,
JAN#@2N2222AU	255	0.80	75	50	6.0	75/325	1.0	S	TXV	MI, OTI, STC, SS
JAN#@2N2369A	317	0.2	40	15	4.5	30/120	30	S	TXV	MC, NES, STC
JAN#@2N2484	376	0.05	60	60	6.0	200/500	1.0	S	TXV	MC, NES
JAN#@2N3019	391	1.0	140	80	7.0	100/300	150	S	TXV	MC, NES, SS
JAN#@2N3019S	391	1.0	140	80	7.0	100/300	150	S	TXV	MC, NES, SS
JAN#@2N3418	393	3.0	85	60	8.0	20/60	1.0	S	TXV	NES, PPC, STC, SDI
JAN#@2N3418S	393	3.0	125	80	8.0	20/60	1.0	S	TXV	NES, PPC, STC, SDI
JAN#@2N3419	393	3.0	125	125	8.0	20/60	1.0	S	TXV	NES, PPC, STC, SDI
JAN#@2N3419S	393	3.0	125	125	8.0	20/60	1.0	S	TXV	NES, PPC, STC, SDI
JAN#@2N3420	393	3.0	85	60	8.0	40/120	1.0	S	TXV	NES, PPC, STC, SDI
JAN#@2N3420S	393	3.0	85	60	8.0	40/120	1.0	S	TXV	NES, PPC, STC, SDI
JAN#@2N3421	393	3.0	125	80	8.0	40/120	1.0	S	TXV	NES, PPC, STC, SDI
JAN#@2N3439	368	1.0	450	350	7.0	40/160	20	S	TXV	NES, PPC, STC,SDI
JAN#@2N3440	368	1.0	300	250	7.0	40/160	20	S	TXV	NES, PPC, STC, SDI
JAN#@2N3501L	366	0.3	150	150	5.0	100/300	150	S	TXV	MC, SS
JAN#@2N3507	349	3.0	80	50	5.0	30/150	1500	-	TXV	SS,STC
JAN#@2N3700	391	1.0	140	80	7.0	100/300	150	S	TXV	MC, NES, SS
JAN#@2N3735	395	1.5	75	40	5.0	40/140	500	-	TXV	MC
JAN#@2N3735L	395	1.5	75	40	5.0	40/140	500	-	TXV	MC
JAN#@2N4150	394	10.0	100	70	7.0	40/120	5000	S	TXV	API, PPC
JAN#@2N4150S	394	10	100	70	7.0	40/120	5000	S	TXV	PPC, NES, SS, STC, SD
JAN#@2N5237	394	10.0	150	120	7.0	40/120	5000	S	TXV	PPC, NES, SS, STC, SD
JAN#@2N5237S	394	10	150	120	7.0	40/120	5000	S	TXV	PPC, NES
JAN#@2N5238	394	10	200	170	7.0	40/120	5000	S	TXV	PPC, NES, SS,STC, SDI
JAN#@2N5238S	394	10	200	170	7.0	40/120	5000	S	TXV	PPC, NES
JAN#@2N5339	560	5.0	100	100	6.0	60/240	2000	S	TXV	PPC, NES, SS
JAN#@2N5660	454	2.0	250	200	6.0	40/120	500	-	TXV	PPC, NES, STC, SS
JAN#@2N5662	454	2.0	250	200	6.0	40/120	500	-	TXV	PPC, NES, STC, SS
JAN#@2N5663	454	2.0	250	200	6.0	40/120	500	-	TXV	PPC, NES, STC, SS
JAN#@2N5666	455	5.0	250	200	6.0	40/120	1000	S	TXV	SS, STC, SDI, PPC
JAN#@2N5667	455	5.0	400	300	6.0	25/75	1000	S	TXV	STC, SDI, PPC

Parts Selection

Summary

Type

NASA Parts Selection List (NPSL)

Application Notes

Transistors, Silicon

NPN, Low Power, 0.3 - 2 W

1. Refer to the detailed specification sheet for applicable power derating factors.

2. All JANTXV transistors must be PIND tested in accordance with MIL-STD-750, Method 2052, Condition A. Additional testing is not required when procured directly from the manufacturer with PIND testing in accordance with MIL-PRF-19500.

NPSL Home Page

Parts Selection

Summary

Type

NASA Parts Selection List (NPSL)

Radiation Test:

GSFC SEU Radiation Data Bank

JPL's Radiation Data Bank

Manufacturer:

Active Supplier Assessment Program (ASAP) Core Suppliers List

Part Procurement:

Part Number/Procurement details

Application Notes:

Applicable details

Last Update:

March 1998

Transistors, Silicon

PNP, Low Power, P sub T

@

T sub A = 25

deg.

C, 0.6 W

Matched Pair

Part Number	Detail Specification MIL-PRF-19500/	I sub C (A)	V sub CBO (V)	V sub CEO (V)	V sub EBO (V)	h sub FE (Min/ Max)	h sub FE at Ic (mA)	Level 1	Level 2, 3	Manufacturer
JAN#@2N3810	336	0.05	60	60	5	150/450	0.1-1.0	-	TXV	NES, SS

JAN#@2N3810L	336	0.05	60	60	5	150/450	0.1-1.0	-	TXV	NES, SS
JAN#@2N3811	336	0.05	60	60	5	300/900	0.1-1.0	-	TXV	NES, SS
JAN#@2N3811L	336	0.05	60	60	5	300/900	0.1-1.0	-	TXV	NES, SS

NPSL Home Page

Parts Selection

Summary

Type

NASA Parts Selection List (NPSL)

Application Notes

Transistors, Silicon

PNP, Low Power,

Matched Pair

1. Refer to detailed specification sheet for applicable power derating factors.

2. All JANTXV transistors must be PIND tested in accordance with MIL-STD-750, Method 2052, Condition A. Additional testing is not required when procured directly from the manufacturer with PIND testing in accordance with MIL-PRF-19500.

NPSL Home Page

Parts Selection

Summary

Type

NASA Parts Selection List (NPSL)

Radiation Test:

GSFC SEU Radiation Data Bank

JPL's Radiation Data Bank

Manufacturer:

Active Supplier Assessment Program (ASAP) Core Suppliers List

Part Procurement:

Part Number/Procurement details

Application Notes:

Applicable details

Last Update:

March 1998

Transistors, Silicon

PNP, Low Power, P sub

T

@

T sub A = 25

deg.

C, 0.2-1.5 W

Part Number	Detail Specification MIL-PRF-19500/	I sub C (A)	V sub CBO (V)	V sub CEO (V)	V sub EBO (V)	h sub FE (Min/Max)	h sub FE at Ic (mA)	Level 1	Level 2, 3	Manufacturer
JAN#@2N2605	354	0.03	70	60	6.0	100/300	0.01	S	TXV	MC
JAN#@2N2905A	290	0.6	60	60	5.0	100/300	150	S	TXV	STC, SS, MC, NES
JAN#@2N2905AL	290	0.6	60	60	5.0	100/300	150	S	TXV	STC, SS, MC, NES
JAN#@2N2907A	291	0.6	60	60	5.0	100/300	150	S	TXV	MI, MC, NES,OTI, STC, SS
JAN#@2N3251A	323	0.2	60	60	5.0	100/300	10	-	TXV	MC, NES
JAN#@2N3468	348	1.0	50	50	-5.0	25/75	500	-	TXV	MC, SS
JAN#@2N3468L	348	1.0	50	50	-5.0	25/75	500	-	TXV	MC, SS
JAN#@2N3634	357	1.0	140	140	5.0	50/100	50	S	TXV	MC, NES
JAN#@2N3634L	357	1.0	140	140	5.0	50/100	50	S	TXV	MC, NES
JAN#@2N3635	357	1.0	140	140	5.0	100/300	50	S	TXV	NES
JAN#@2N3635L	357	1.0	140	140	5.0	100/300	50	S	TXV	NES
JAN#@2N3636	357	1.0	175	175	5.0	50/150	50	S	TXV	NES
JAN#@2N3636L	357	1.0	175	175	5.0	50/150	50	S	TXV	NES
JAN#@2N3637	357	1.0	175	175	5.0	50/150	50	S	TXV	NES
JAN#@2N3637L	357	1.0	175	175	5.0	100/300	50	S	TXV	NES
JAN#@2N3763	396	1.5	60	60	5.0	40/140	500	-	TXV	MC, NES, SS
JAN#@2N3763L	396	1.5	60	60	5.0	40/140	500	-	TXV	MC, NES, SS
JAN#@2N3764	396	1.5	60	60	5.0	40/140	500	S	TXV	NES, SS
JAN#@2N3765	396	1.5	60	60	5.0	40/140	500	-	TXV	NES, SS
JAN#@2N3867	350	3.0	40	40	4.0	40/200	1500	S	TXV	API, PPC, NES, STC
JAN#@2N3867S	350	3.0	40	40	4.0	40/200	1500	S	TXV	API, PPC, NES, STC
JAN#@2N3868	350	3.0	60	60	4.0	30/150	1500	S	TXV	API, PPC, NES, STC
JAN#@2N3868S	350	3.0	60	60	4.0	40/150	1500	S	TXV	API, PPC, NES, STC
JAN#@2N5415	485	1.0	200	200	6.0	30/120	50	S	TXV	PPC, NES, SDI
JAN#@2N5416	485	1.0	350	300	6.0	30/120	50	S	TXV	PPC, NES, SDI
JAN#@2N5416S	485	1.0	350	300	6.0	30/120	50	S	TXV	PPC, NES, SDI

NPSL Home Page

Parts Selection

Summary

Type

NASA Parts Selection List (NPSL)

Application Notes

Transistors, Silicon

PNP, Low Power, 0.2 - 1.5 W

1. Refer to detailed specification sheet for applicable power derating factors.

2. All JANTXV transistors must be PIND tested in accordance with MIL-STD-750, Method 2052, Condition A. Additional testing is not required when procured directly from the manufacturer with PIND testing in accordance with MIL-PRF-19500.

3. The leaded package (case) is designated for transistors which are available in leaded and unleaded (U designation) configurations. Refer to the detailed specification for surface mount (unleaded) package outlines.

NPSL Home Page

Parts Selection

Summary

Type

NASA Parts Selection List (NPSL)

Radiation Test:

GSFC SEU Radiation Data Bank

JPL's Radiation Data Bank

Manufacturer:

Active Supplier Assessment Program (ASAP) Core Suppliers List

Part Procurement:

Part Number/Procurement details

Application Notes:

Applicable details

Last Update:

March 1998

Optocoupler

LED/PhotoTransistor,

P sub T @ T sub A = 25

deg.

C, <1.0 W

Part Number	Detail Specification MIL-PRF-19500/	I sub F (mA)	I sub P (A)	V sub F atI sub F V sub dc	V sub F atI sub F mA	V sub CBO (V)	V sub EBO (V)	V sub CEO (V)	Level 1	Level 2, 3	Ma
JAN#@4N22	486	40	1	1.3	10	35	4	35	S	TXV	MI
JAN#@4N23	486	40	1	1.3	10	35	4	35	S	TXV	MI
JAN#@4N23A	486	40	1	1.3	10	35	4	35	S	TXV	MI
JAN#@4N24	486	40	1	1.3	10	35	4	35	S	TXV	MI
JAN#@4N24A	486	40	1	1.3	10	35	4	35	S	TXV	MI
JAN#@4N47	548	40	1	1.3	10	45	7	40	S	TXV	MI
JAN#@4N48	548	40	1	1.3	10	45	7	40	S	TXV	MI
JAN#@4N49	548	40	1	1.3	10	45	7	40	S	TXV	MI

NPSL Home Page

Parts Selection

Summary

Type

NASA Parts Selection List (NPSL)

Application Notes

Optocoupler

LED/Phototransistor

1. All JANTXV transistors must be PIND tested in accordance with MIL-STD-750, Method 2052, Condition A.

2. These optocouplers are sensitive to proton radiation damage. Use appropriate derating factors (typically a factor of five or more for current transfer ratio) when the using the 4N49 to ensure that proton damage is minimized for use in the space environment.

NPSL Home Page

Parts Selection

Summary

Type

NASA Parts Selection List (NPSL)

Radiation Test:

GSFC SEU Radiation Data Bank

JPL's Radiation Data Bank

Manufacturer:

Active Supplier Assessment Program (ASAP) Core Suppliers List

Part Procurement:

Part Number/Procurement details

Application Notes:

Applicable details

Last Update:

March 1998

MOSFET, N-Channel

Power, P sub

T

@

T sub c = 25

deg.

C, 1.4 - 150 W

Part Number	Detail Specification MIL-PRF-19500/	I sub D (A) T sub c=25deg. C	V sub DS (V sub dc)	V sub GS (V sub dc)	r sub DS (on) (Ohm) V sub GS=10V	Level 1	Level 2, 3	Manufacturer
JAN#@2N6660	547	0.99	60	+/-20	3.0	-	TXV	SI
JAN#@2N6661	547	0.86	90	+/-20	4.0	-	TXV	SI
JAN#@2N6756	542	14.0	100	+/-20	0.18	-	TXV	HSC, IRC

JAN#@2N6758	542	9.0	200	+/-20	0.4	-	TXV	HSC, IRC
JAN#@2N6760	542	5.5	400	+/-20	1.0	-	TXV	HSC, IRC
JAN#@2N6762	542	4.5	500	+/-20	1.5	-	TXV	HSC, IRC
JAN#@2N6764	543	38.0	100	+/-20	0.055	-	TXV	HSC, IRC
JAN#@2N6766	543	30.0	200	+/-20	0.085	-	TXV	HSC, IRC
JAN#@2N6768	543	14.0	400	+/-20	0.30	-	TXV	HSC, IRC
JAN#@2N6770	543	12.0	500	+/-20	0.40	-	TXV	HSC, IRC
JAN#@2N6782	556	3.50	100	+/-10	0.6	-	TXV	HSC, IRC
JAN#@2N6784	556	2.25	200	+/-20	1.5	-	TXV	HSC, IRC
JAN#@2N6786	556	1.25	400	+/-20	3.6	-	TXV	HSC, IRC
JAN#@2N6788	555	6.0	100	+/-20	0.30	-	TXV	HSC, IRC
JAN#@2N6790	555	3.5	200	+/-20	0.80	-	TXV	HSC, IRC
JAN#@2N6792	555	2.0	400	+/-20	1.80	-	TXV	HSC, IRC
JAN#@2N6794	555	1.5	500	+/-20	3.0	-	TXV	HSC, IRC
JAN#@2N6796	557	8.0	100	+/-20	0.18	-	TXV	HSC, IRC
JAN#@2N6798	557	5.5	200	+/-20	0.4	-	TXV	HSC, IRC
JAN#@2N6800	557	3.0	400	+/-20	1.0	-	TXV	HSC, IRC
JAN#@2N6802	557	2.5	500	+/-20	1.5	-	TXV	HSC, IRC
JAN#@2N6901	570	1`.69	100	+/-10	1.4	-	TXV	HSC
JAN#@2N6902	566	12	100	+/-10	0.20	-	TXV	HSC
JAN#@2N6903	570	0.98	200	+/-20	3.65	-	TXV	HSC
JAN#@2N6904	566	8.0	200	+/-10	0.65	-	TXV	HSC
JAN#@2N7218U	596	28.0	100	+/-20	0.077	S	TXV	IRC
JAN#@2N7219U	596	18.0	200	+/-20	0.18	S	TXV	IRC
JAN#@2N7221U	596	10.0	400	+/-20	0.55	S	TXV	IRC
JAN#@2N7222U	596	8.0	500	+/-20	0.85	S	TXV	IRC
JAN#@2N7224U	592	34.0	100	+/-20	0.07	S	TXV	HSC
JAN#@2N7225	592	27.0	200	+/-20	0.10	-	TXV	HSC, IRC
JAN#@2N7227	592	14.0	400	+/-20	0.315	-	TXV	APT, IRC, HSC
JAN#@2N7228U	592	12.0	500	+/-20	0.415	S	TXV	APT, IRC, HSC
JAN#@2N7261	601	8.0	100	+/-20	0.18	S	TXV	IRC
JAN#@2N7262	601	5.5	200	+/-20	0.4	S	TXV	IRC
JAN#@2N7268	603	34.0	100	+/-20	0.065	S	TXV	IRC
JAN#@2N7269	603	26.0	200	+/-20	0.100	S	TXV	IRC

1. Refer to the detailed part specification for applicable power derating factors.

2. All JANTXV transistors must be PIND tested in accordance with MIL-STD-750, Method 2052, Condition A. Additional testing is not required when procured directly from the manufacturer with PIND testing in accordance with MIL-PRF-19500.

3. For transistors which are available in leaded and unleaded (U designation) configurations, the leaded package (case) is designated. Refer to the detail specification for surface mount (unleaded) package outlines.

NPSL Home Page

Parts Selection

Summary

Type

NASA Parts Selection List (NPSL)

Radiation Test:

GSFC SEU Radiation Data Bank

JPL's Radiation Data Bank

Manufacturer:

Active Supplier Assessment Program (ASAP) Core Suppliers List

Part Procurement:

Part Number/Procurement details

Application Notes:

Applicable details

Last Update:

March 1998

MOSFET, P-Channel

Power, P sub

T

@

T sub c = 25

deg.

C, 6.25 - 125 W

Part Number	Detail Specification MIL-PRF-19500/	I sub D (A) T sub c = 25deg. C	V sub DS (V sub dc)	V sub GS (V sub dc)	r sub DS (on) (Ohm) V sub GS=10V	Level 1	Level 2, 3	Manufacturer
JAN#@2N6804	562	1.25	400	+/-20	3.6	-	TXV	HSC
JAN#@2N6806	562	6.0	100	+/-20	0.30	-	TXV	HSC
JAN#@2N6845	563	0.86	90	+/-20	4.0	-	TXV	IRC
JAN#@2N6847	563	1`.69	100	+/-10	1.4	-	TXV	IRC
JAN#@2N6849	564	0.98	200	+/-20	3.65	-	TXV	HSC, IRC
JAN#@2N6851	564	3.50	100	+/-10	0.6	-	TXV	HSC, IRC
JAN#@2N6895	565	0.99	60	+/-20	3.0	-	TXV	HSC
JAN#@2N6896	565	2.25	200	+/-20	1.5	-	TXV	HSC
JAN#@2N6897	565	3.5	200	+/-20	0.80	-	TXV	HSC

JAN#@2N6898	565	25	100	+/-20	0.2	-	TXV	HSC
JAN#@2N7236	595	-11	-100	+/-20	0.2	S	TXV	IRC
JAN#@2N7236U	595	-14	-100	+/-20	0.2	S	TXV	IRC
JAN#@2N7237	595	-11	-200	+/-20	0.51	S	TXV	IRC
JAN#@2N7237U	595	-8	-200	+/-20	0.51	S	TXV	IRC

NPSL Home Page

Parts Selection

Summary

Type

NASA Parts Selection List (NPSL)

Application Notes

MOSFET, P-Channel

Power

1. All JANTXV transistors must be PIND tested in accordance with MIL-STD-750, Method 2052, Condition A. Additional testing is not required when procured directly from the manufacturer with PIND testing in accordance with MIL-PRF-19500.

2. For transistors which are available in leaded and unleaded (U designation) configurations, the lesded package (case) is designated. Refer to the detail specification for surface mount (unleaded) package outlines.

NPSL Home Page

Parts Selection

Summary

Type

NASA Parts Selection List (NPSL)

Radiation Test:

GSFC SEU Radiation Data Bank

JPL's Radiation Data Bank

Manufacturer:

Active Supplier Assessment Program (ASAP) Core Suppliers List

Part Procurement:

Part Number/Procurement details

Application Notes:

Applicable details

Last Update:

March 1998

Transistors, Silicon

RF, NPN, P sub T

@

T sub c = 25

deg.

C, 0.2 - 1.0 W

Part Number	Detail Specification MIL-PRF-19500/	F (Mhz)	I sub C (A)	V sub CBO (V)	V sub CEO (V)	h sub FE Min/ Max	h sub FE at Ic (mA)	Level 1	Level 2, 3	Manufacturer
JAN#@2N918	301	100	0.05	30	15	20/200	3.0	S	TXV	MC, SS
JAN#@2N2857	343	450	0.04	30	15	30/150	3.0	S	TXV	M/A, SS
JAN#@2N3866A	398	400	0.04	60	30	25/200	50.0	S	TXV	MC, SS
JAN#@2N5109	453	200	0.04	40	20	40/120	50.0	S	TXV	MC, SS

NPSL Home Page

Parts Selection

Summary

Type

NASA Parts Selection List (NPSL)

Application Notes

Transistors, Silicon

RF, NPN

1. Derate 2N918 linearly at 1.71 mW/deg.C for T sub C > +25 deg.C. Refer to the detailed specification regarding derating factor for other parts listed herein.

2. All JANTXV transistors must be PIND tested in accordance with MIL-STD-750, Method 2052, Condition A. Additional testing is not required when procured directly from the manufacturer with PIND testing in accordance with MIL-PRF-19500.

NPSL Home Page

Parts Selection

Summary

Type

NASA Parts Selection List (NPSL)

Radiation Test:

GSFC SEU Radiation Data Bank

JPL's Radiation Data Bank

Manufacturer:

Active Supplier Assessment Program (ASAP) Core Suppliers List

Part Procurement:

Part Number/Procurement details

Application Notes:

Applicable details

Last Update:

Transistors, Silicon

RF, PNP, P sub

T

@

T sub A = 25

deg.

C, 0.2 W

Part Number	Detail Specification MIL-PRF-19500/	F (Mhz)	I sub C (A)	V sub CBO (V)	V sub CEO (V)	h sub FE (Min/Max)	h sub FE at Ic (mA)	Level 1	Level 2, 3	Manufacturer
JAN#@2N4957	426	450	0.03	30	30	30/165	5.0	-	TXV	SS

NPSL Home Page

Parts Selection

Summary

Type

NASA Parts Selection List (NPSL)

Application Notes

Transistors, Silicon

RF, PNP, P sub

T

@

T sub A = +25

deg.

C, 0.2 W

1. Derate at 1.14 mW/deg.C for operation above T sub A = +25 deg.C

2. All JANTXV transistors must be PIND tested in accordance with MIL-STD-750, Method 2052, Condition A. Additional testing is not required when procured directly from the manufacturer with PIND testing in accordance with MIL-PRF-19500.

NPSL Home Page

Parts Selection

Summary

Type

NASA Parts Selection List (NPSL)

TRANSISTORS

MIL-PRF-19500

Part Number Explanation

Example: JAN#@2N2369AR where,

JAN	Joint Army and Navy (JAN) Military Part Designator
#	Quality Level (JAN, JANTX, JANTXV, JANS and JANFS)
@	Indicates Radiation Hardness Assurance (RHA) Level
2N	Component designator for Transistors
2369	Identification Number
AR	Suffix Letters

Quality Level, (#)

S	Highest Quality level 1
TXV	Level 2, 3

Radiation Hardness Assurance Level, (@)

RHA Designator	Total Ionizing Dose (RAD (Si))	Neutron Fluence (N/cm**2)
M	3 x 10**3	2 x 10**12
D	1 x 10**4	2 x 10**12
L	5 x 10**4	2 x 10**12
R	1 x 10**5	2 x 10**12
F	3 x 10**5	2 x 10**12
G	6 x 10**5	2 x 10**12
H	1 x 10**6	2 x 10**12

NOTE: Unless specifically stated within the parts selection tables of the NPSL, listing of a device technology herein does NOT imply/guarantee Radiation Hardness Assurance (RHA). Applications concerned with a device's ability to tolerate exposure to various forms of space radiation (e.g., total ionizing dose, single event effects, etc.) should be reviewed and have the device assessed by the Program's radiation assurance experts. The following resources may also be consulted for initial guidance:

NASA Goddard Radiation Effects and Analysis

Jet Propulsion Laboratory Radiation Effects

Suffix letters

A, B, C, etc	Indicates a modified version that is substitutable for the basic part number (non-suffix) device
M	Indicates matching of specified parameters of separate devices
R	Indicates reverse polarity packaging of the basic part number device
L or S	Indicates that the terminal leads are longer or shorter, respectively than those of the basic part number device
U	Indicates leaded or surface mounted devices
UR	Indicates leaded or surface mounted (round end cap diodes)
US	Indicates leaded or surface mounted (square end cap diodes)
-1	Indicates metallurgical bond

NPSL Home Page

Parts Selection

Summary

Type

NPSL Parts Selection List (NPSL)

Transistor Manufacturer Listing

Click

here

for additional information regarding parts technologies offered by these manufacturers listed in the Active Supplier Assessment Program (ASAP) Core Suppliers List.

Listed below are links to manufacturer data sites that may provide additional part related information. The linked sites are not under the control of NPSL and NASA is not responsible for information contained in the linked site. These links are provided for your convenience only.

APT

Advanced Power Technology

405 Southwest Columbia Street

Bend, OR 97702-1000

Cage Code: ODY74

Phone No: 541.382.8028 x1181

API

API Electronics, Inc.

375 Rabro Drive

Hauppage, NY 11788-4227

Cage Code: 52333, 30045

Phone No: 516.582.6767

HSC

Harris Semiconductor

Route 202

Somerville, NJ 08876-9999

Cage Code: 18722

Phone No: 717.474.3252

IRC

International Rectifier Corporation

Semiconductor Division

233 Kansas Street

El Segundo, CA 90245-4382

Cage Code: 59993

Phone No: 310.607.8883

M/A

M/A-COM, Inc.

1011 Pawtucket Blvd.

P.O.Box 3295
Lowell, MA 01853-3295
Cage Code: 96341
Phone No: 617.564.3038
MI
Micropac Industries, Inc.
P.O.Box 469017
Garland, TX 75046-9017
Cage Code: 31757
Phone No: 214.272.3571 x274
MC
Microsemi Corporation - Watertown Division
580 Pleasant Street
Watertown, MA 02172-2497
Cage Code: 12969
Phone No: 617.926.0404
MC-PPC
Division of Microsemi Corp.
7516 Central Indusytrial Drive
Riviera Beach, FL 33404-3499
Cage Code: 33178
Phone No: 561.848.9606
NES
New England Semiconductor
6 Lake Street
Lawrence, MA 01841-3011
Cage Code: 43611
Phone No: 978.794.7557
OTI
Optek Technology, Inc.
1215 West Crosby Road
Carrollton, TX 75006-6989
Cage Code: 32694
Phone No: 214.323.2272
SS
Semicoa Semiconductors
333 McCormick Avenue
Costa Mesa, CA
Cage Code: 34156
Phone No: 714.979.1900

SI

Siliconix, Inc.

2201 Laurelwood Road

Santa Clara, CA 95054-1593

Cage Code: 17856

Phone No: 408.970.3957

STC (site not available)

Silicon Transistor Corporation

27 Katrina Road

Chelmsford, MA 01824-2842

Cage Code: 07256

Phone No: 978-256-3321

SDI

Solitron Devices, Inc.

3301 Electronics Way

West Palm Beach, FL 33407-4636

Cage Code: 21845

Phone No: 561.848.4311 Xt 220

Home
|
NASA Parts Selection List (NPSL)
| Thermistors
About NPSL
Prohibited Materials
Parts Selection Table of Contents
Capacitors
Circuit Protection Devices
Fuses
Connectors
Filters
Inductors
Microcircuits
NEW!
Monolithics
Hybrids
Resistors
Semiconductors
(Summary)
Diodes
Transistors
Thermistors
Wire and Cable

NASA Parts Selection List

Thermistors

The following Thermistor specifications are available for selection:

Military Specification	Generic Designator	Description
S-311-P-18	311P18	Thermistor, Negative Temperature Coefficient, Insulated and Uninsulated, Non-hermetic
MIL-T-23648	RTH	Thermistor, Insulated

Parts
|
Packaging
|
Radiation

|
Publications
|
Calendar
|
Experts
Admin Login
|
Request Account
|
Feedback
|
Site Map
|
Help
|
Search
NEPP Program Manager:
Chuck Barnes, Jet Propulsion Laboratory
Responsible NASA Official:
Michael Sampson, NEPAG Manager
Website Comments:
Web Development Team
Last Modified:
August 8, 2001
AETD IT Security Banner
NASA Privacy Statement
Go to -
NEPP
|
NPSL
|
Thermistors
MIL-PRF-23648, Thermistors
Thermistors, Insulated
RTH Styles
Part Number/Ordering Explanation
Important! Application Notes
Revision History for MIL-PRF-23648 Listing in the NPSL
Updated: 01/13/04

Click on the link below to see the associated parts selection listing:

Style	Detail Specification	Description
RTH42	MIL-PRF-23648/19	Thermistors, Positive Temperature Coefficient, Insulated

APPLICATION NOTES FOR MIL-PRF-23648

1) WARNING! Parts covered by this specification may contain internal connections that may reflow during installation. Heat sinking is recommended during mounting to prevent internal solder reflow.

Revision History for MIL-PRF-23648 Listing in the NPSL

01/13/04	Updated Mfr Listings to reflect lastest QPL. RTI Electronics bought out the Ketema thermistor product lines circa 1999
05/11/99	Updated this section to show that the specification has been converted to a "performance" specification. Hence all references to the specification number have changed from MIL-T-23648 to MIL-PRF-23648
12/22/97	Initial Release of MIL-T-23648 Thermistor Section in the NPSL

Part Number Ordering Information, example and explanation:

RTH42ES102J where,

RTH	42	E	S	102	J
Style (Thermistor Conforming to MIL-PRF-23648)	Configuration	Resistance Ratio Characteristic	Lead Type	Zero Power Resistance @ 25deg.C	Zero Power Resistance Tolerance @ 25deg.C

Click Here for Outline Dimensions

Part number ordering options are developed using the following criteria:

Configuration	Specification		Resistance Ratio Characteristic	Value
42	MIL-PRF-23648/19		E	0.55 +/- 10%

				Characteristic J
Lead Type	Description		Temperature	Resistance Tolerance (+/-%)
			-55deg.C	20
S	Solderable		-15deg.C	13
			0deg.C	7
			+25deg.C	5
			+50deg.C	7
			+75deg.C	9
			+100deg.C	12
			+125deg.C	15

The zero power resistance @ 25deg.C is expresessed in ohms and identified by a three digit number. The first two digits represent significant figures and the third digit represents the number of zeroes to follow.

Examples: 100 = 10 ohms

751 = 750 ohms

242 = 2400 ohms

RTH42 per MIL-PRF-23648/19

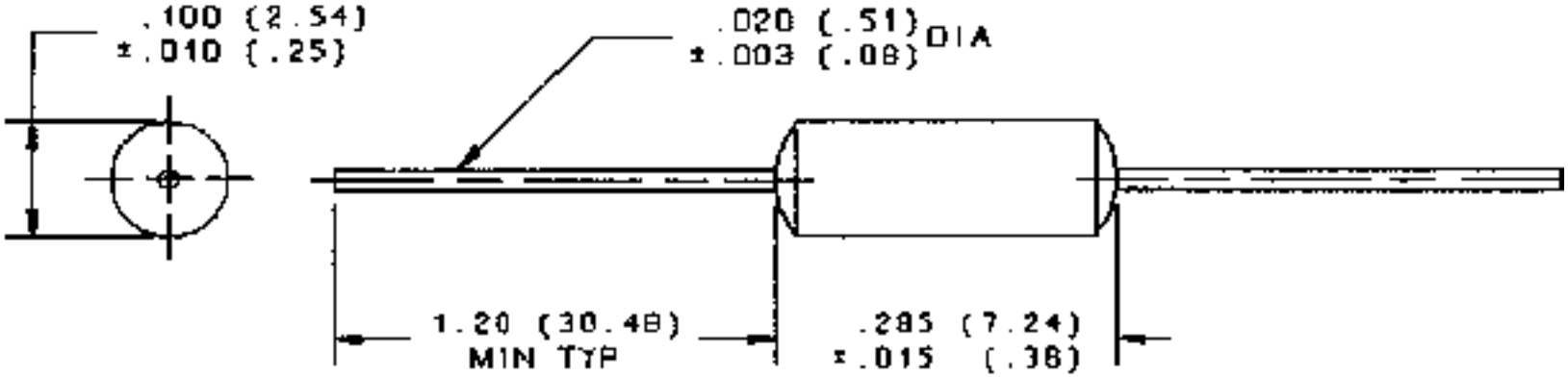

MIL-PRF-23648/19 (RTH42) Thermistors

Click Here for Outline Dimensions

Part Number	Zero Power Resistance @ 25deg.C (Ohms)	Zero Power Resistance Tolerance	Level	Manufacturer
RTH42ES100J	10	J	1 or 2	RTI, MSC, QTI
RTH42ES110J	11	J	1 or 2	RTI, MSC, QTI
RTH42ES120J	12	J	1 or 2	RTI, MSC, QTI
RTH42ES130J	13	J	1 or 2	RTI, MSC, QTI
RTH42ES150J	15	J	1 or 2	RTI, MSC, QTI
RTH42ES160J	16	J	1 or 2	RTI, MSC, QTI
RTH42ES180J	18	J	1 or 2	RTI, MSC, QTI
RTH42ES200J	20	J	1 or 2	RTI, MSC, QTI
RTH42ES220J	22	J	1 or 2	RTI, MSC, QTI
RTH42ES240J	24	J	1 or 2	RTI, MSC, QTI
RTH42ES270J	27	J	1 or 2	RTI, MSC, QTI

RTH42ES300J	30	J	1 or 2	RTI, MSC, QTI
RTH42ES330J	33	J	1 or 2	RTI, MSC, QTI
RTH42ES360J	36	J	1 or 2	RTI, MSC, QTI
RTH42ES390J	39	J	1 or 2	RTI, MSC, QTI
RTH42ES430J	43	J	1 or 2	RTI, MSC, QTI
RTH42ES470J	47	J	1 or 2	RTI, MSC, QTI
RTH42ES510J	51	J	1 or 2	RTI, MSC, QTI
RTH42ES560J	56	J	1 or 2	RTI, MSC, QTI
RTH42ES620J	62	J	1 or 2	RTI, MSC, QTI
RTH42ES680J	68	J	1 or 2	RTI, MSC, QTI
RTH42ES750J	75	J	1 or 2	RTI, MSC, QTI
RTH42ES820J	82	J	1 or 2	RTI, MSC, QTI
RTH42ES910J	91	J	1 or 2	RTI, MSC, QTI
RTH42ES101J	100	J	1 or 2	RTI, MSC, QTI
RTH42ES111J	110	J	1 or 2	RTI, MSC, QTI
RTH42ES121J	120	J	1 or 2	RTI, MSC, QTI
RTH42ES131J	130	J	1 or 2	RTI, MSC, QTI
RTH42ES151J	150	J	1 or 2	RTI, MSC, QTI
RTH42ES161J	160	J	1 or 2	RTI, MSC, QTI
RTH42ES181J	180	J	1 or 2	RTI, MSC, QTI
RTH42ES201J	200	J	1 or 2	RTI, MSC, QTI
RTH42ES221J	220	J	1 or 2	RTI, MSC, QTI
RTH42ES241J	240	J	1 or 2	RTI, MSC, QTI
RTH42ES271J	270	J	1 or 2	RTI, MSC, QTI
RTH42ES301J	300	J	1 or 2	RTI, MSC, QTI
RTH42ES331J	330	J	1 or 2	RTI, MSC, QTI
RTH42ES361J	360	J	1 or 2	RTI, MSC, QTI
RTH42ES391J	390	J	1 or 2	RTI, MSC, QTI
RTH42ES431J	430	J	1 or 2	RTI, MSC, QTI
RTH42ES471J	470	J	1 or 2	RTI, MSC, QTI
RTH42ES511J	510	J	1 or 2	RTI, MSC, QTI
RTH42ES561J	560	J	1 or 2	RTI, MSC, QTI
RTH42ES621J	620	J	1 or 2	RTI, MSC, QTI
RTH42ES681J	680	J	1 or 2	RTI, MSC, QTI
RTH42ES751J	750	J	1 or 2	RTI, MSC, QTI
RTH42ES821J	820	J	1 or 2	RTI, MSC, QTI
RTH42ES911J	910	J	1 or 2	RTI, MSC, QTI
RTH42ES102J	1,000	J	1 or 2	RTI, MSC, QTI
RTH42ES112J	1,100	J	1 or 2	RTI, MSC, QTI
RTH42ES122J	1,200	J	1 or 2	RTI, MSC, QTI
RTH42ES132J	1,300	J	1 or 2	RTI, MSC, QTI
RTH42ES152J	1,500	J	1 or 2	RTI, MSC, QTI
RTH42ES162J	1,600	J	1 or 2	RTI, MSC, QTI
RTH42ES182J	1,800	J	1 or 2	RTI, MSC, QTI
RTH42ES202J	2,000	J	1 or 2	RTI, MSC, QTI
RTH42ES222J	2,200	J	1 or 2	RTI, MSC, QTI
RTH42ES242J	2,400	J	1 or 2	RTI, MSC, QTI

RTH42ES272J	2,700	J	1 or 2	RTI, MSC, QTI
RTH42ES302J	3,000	J	1 or 2	RTI, QTI
RTH42ES332J	3,300	J	1 or 2	RTI, QTI
RTH42ES362J	3,600	J	1 or 2	RTI, QTI
RTH42ES392J	3,900	J	1 or 2	RTI, QTI
RTH42ES432J	4,300	J	1 or 2	RTI, QTI
RTH42ES472J	4,700	J	1 or 2	RTI, QTI
RTH42ES512J	5,100	J	1 or 2	RTI, QTI
RTH42ES562J	5,600	J	1 or 2	RTI, QTI
RTH42ES622J	6,200	J	1 or 2	RTI, QTI
RTH42ES682J	6,800	J	1 or 2	RTI, QTI
RTH42ES752J	7,500	J	1 or 2	RTI, QTI
RTH42ES822J	8,200	J	1 or 2	RTI, QTI
RTH42ES912J	9,100	J	1 or 2	RTI, QTI
RTH42ES103J	10,000	J	1 or 2	RTI, QTI

GSFC S-311-P-18 Thermistors

Click Here for Outline Dimensions

Part Number	Zero Power Resistance @ 25deg.C (Ohms)	Resistance Tolerance Limits 0deg.C to 70deg.C (+/-%)	Operating and Storage Temperature Range	Level	Manufacturer
311P18-01XXXX	2,252	1.02	-55deg.C to +90deg.C	1 or 2	YSI
311P18-02XXXX	2,252	0.51	-55deg.C to +70deg.C	1 or 2	YSI
311P18-03XXXX	3,000	1.02	-55deg.C to +90deg.C	1 or 2	YSI
311P18-04XXXX	3,000	0.56	-55deg.C to +70deg.C	1 or 2	YSI
311P18-05XXXX	5,000	1.02	-55deg.C to +90deg.C	1 or 2	YSI
311P18-06XXXX	5,000	0.51	-55deg.C to +70deg.C	1 or 2	YSI
311P18-07XXXX	10,000	0.93	-55deg.C to +90deg.C	1 or 2	YSI
311P18-08XXXX	10,000	0.56	-55deg.C to +70deg.C	1 or 2	YSI
311P18-09XXXX	30,000	1.00	-55deg.C to +90deg.C	1 or 2	YSI
311P18-10XXXX	30,000	0.50	-55deg.C to +70deg.C	1 or 2	YSI

Go to -

NEPP

|

NPSL

|

Thermistors

S-311-P-18, Thermistors

Thermistors, Negative Temperature Coefficient, Insulated and Uninsulated, Non-Hermetic

S-311-P-18 Styles

Part Number/Ordering Explanation

Important! Application Notes

Revision History for S-311-P-18 Listing in the NPSL

Initial Release: 12/22/97

Click on the link below to see the associated parts selection listing:

Style	Detail Specification	Description
311P18	GSFC S-311-P-18	Thermistors, Negative Temperature Coefficient, Insulated and Uninsulated, Non-hermetic Download NASA Goddard Specification

APPLICATION NOTES FOR S-311-P-18

1) WARNING! Use heat sinks when soldering or welding to thermistor leads.

2) For a thermistor suspended in still air, the thermal time constant is 10 seconds maximum, except lead style "E" which is 25 seconds maximum.

3) For a thermistor suspended in still air, the power dissipation constant is 1 mW/deg.C minimum. This constant does not apply to lead style "E".

Revision History for S-311-P-18 Listing in the NPSL

12/22/97	Initial Release of GSFC S-311-P-18 Thermistor Section in the NPSL

Part Number Ordering Information, example and explanation:

311P18-01S7R6 where,

311P18	-01	S	7R6
GSFC Prefix (Thermistor, NTC Conforming to GSFC S-311-P-18)	Dash Number Corresponds to Zero Power Resistance @ 25deg.C	Lead Material	Lead Length in cm

Click Here for Outline Dimensions

Part number ordering options are developed using the following criteria:

Lead Material	Description
S	32 AWG tinned solid copper wire, LW (0.20)C-51-N per MIL-STD-1276
N	32 AWG solid nickel wire, LW(0.20)N-01-N per MIL-STD-1276
E	32 AWG tinned solid copper wire, LW(0.20)C-51-N per MIL-STD-1276, one lead bare, one lead insulated with PTFE tubing per MIL-I-22129, covered with heat shrinkable FEP insulation per M23053/11-105
T	28 AWG silver coated stranded wire, PTFE per M16878/6BCB9
A	28 AWG silver coated stranded wire, ETFE per M22759/33-28-9

Standard lead lengths are from 7.6 cm to 100 cm. The lead length in centimeters (cm) is specified by three characters. For lengths from 7.6 cm to 9.9 cm, the letter "R" is used as the decimal point (e.g., 7R6 = 7.6 cm). For lengths from 10 cm to 99 cm, the letter "R" is used as the last character (e.g., 76R = 76 cm). For 100 cm lead length, the digits 101 are used. The first two digits represent significant figures and the last digit specifies the number of zeroes to follow.

S-311-P-18 Outline Dimensions

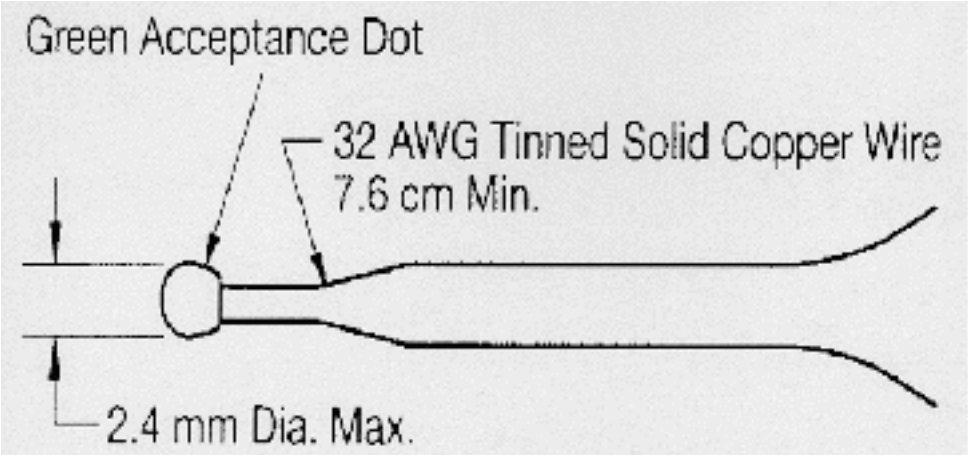

Type S Lead Configuration

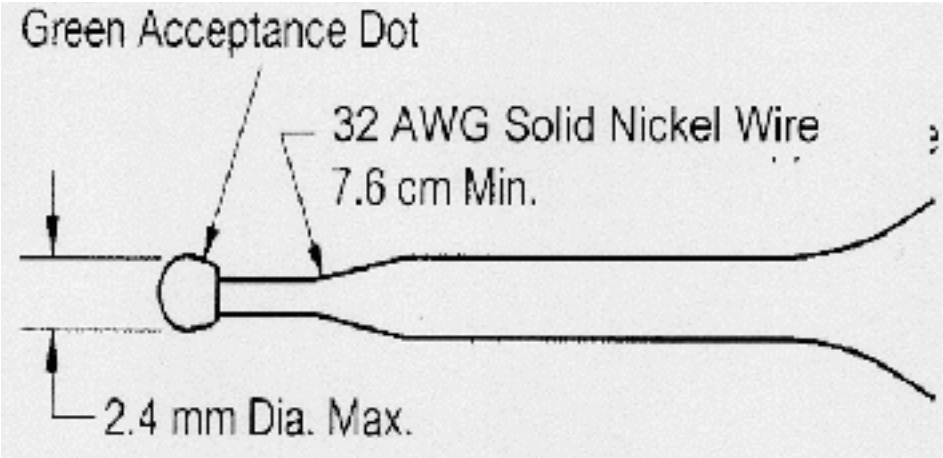

Type N Lead Configuration

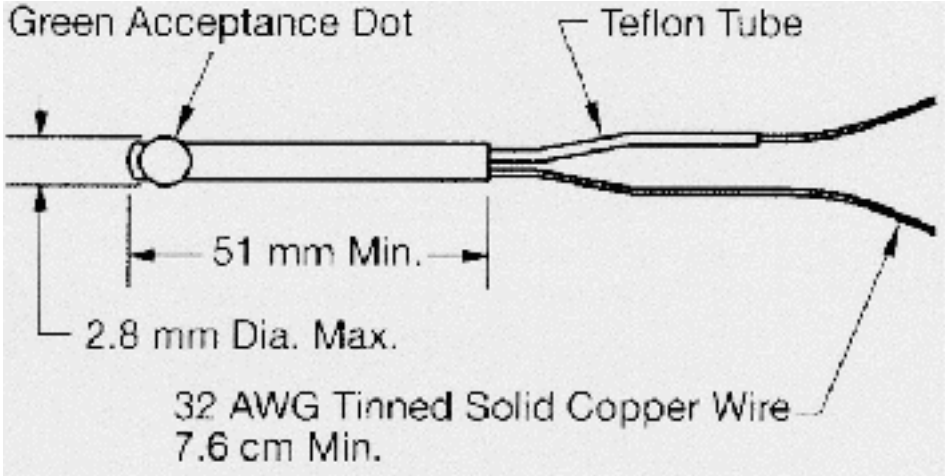

Type E Lead Configuration

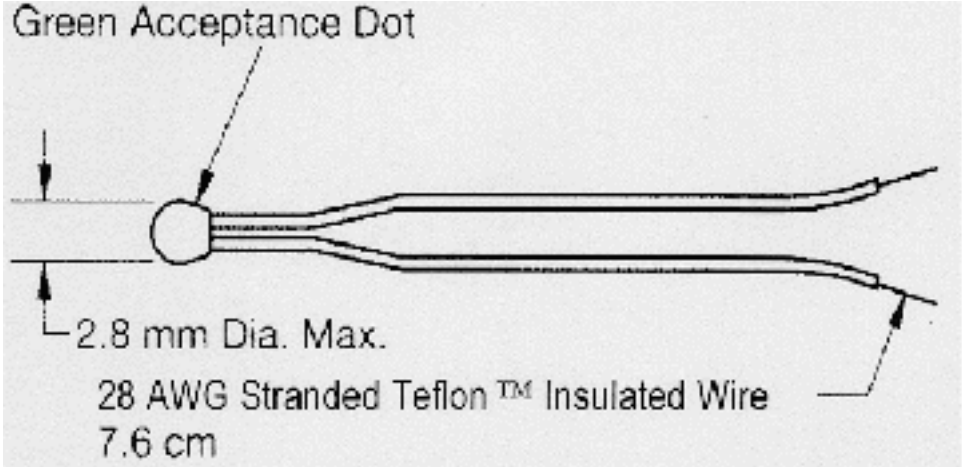

Type T Lead Configuration

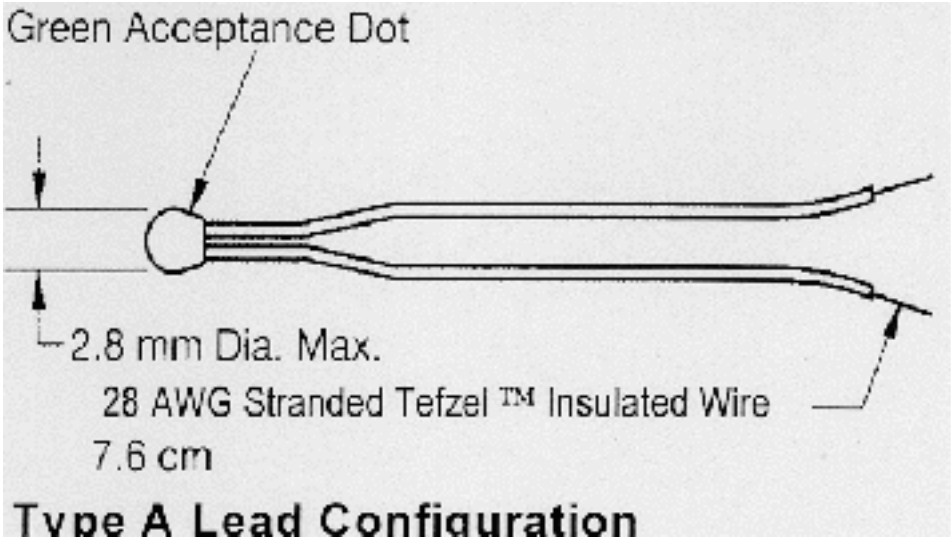

Type A Lead Configuration

Thermistor Manufacturer Listing

And Links to Manufacturer Homepages

Click

here

for detailed information regarding part technologies offered by manufacturers listed in the

PSAP

Core Suppliers List

Listed below are links to manufacturer data sites that may provide additional part related information. The linked sites are not under the control of NPSL and NASA is not responsible for information contained in the linked site. We are providing these links for your convenience only.

RTI

RTI Electronics, Inc (Formerly - Ketema, Inc. Rodan Division)

1800 E. Via Burton

Anaheim, CA 92806

CAGE Code: 15454

Tel: 714-765-8200

MSC

Microsemi Corporation

580 Pleasant Street

Watertown, MA 02172

CAGE Code: 12969

QTI

Quality Thermistor, Inc.

2108 Century Way

Boise, ID 83709

CAGE Code: 56866

Tel: 208-377-3373

YSI

Yellow Springs, I

nc.

Rte. 68 P.O. Box 279

Yellow Springs, OH 45387

CAGE Code: 97794

Tel: 513-767-7241

Home
|
NASA Parts Selection List (NPSL)
| Wire and Cable
About NPSL
Prohibited Materials
Parts Selection Table of Contents
Capacitors
Circuit Protection Devices
Fuses
Connectors
Filters
Inductors
Microcircuits
NEW!
Monolithics
Hybrids
Resistors
Semiconductors
(Summary)
Diodes
Transistors
Thermistors
Wire and Cable

NASA Parts Selection List

Wire and Cable

Application Guide: Wire Insulation Selection Guideline

The following basic Wire and Cable types are available for selection:

Individual Wires

Stranded Wire

Magnet Wire (Under Construction)

Cables

Coaxial Cable

Multiconductor Cable

Parts

|

Packaging

|

Radiation

|

Publications

|

Calendar

|

Experts

Admin Login

|

Request Account

|

Feedback

|

Site Map

|

Help

|

Search

NEPP Program Manager:

Chuck Barnes, Jet Propulsion Laboratory

Responsible NASA Official:

Michael Sampson, NEPAG Manager

Website Comments:

Web Development Team

Last Modified:

August 8, 2001

AETD IT Security Banner

NASA Privacy Statement

Wire Insulation Selection Guidelines

Insulation Types	Advantages
FEP and PTFE (Dupont TM Teflon)	Excellent high temperature properties. PTFE Teflon is preferred for solder applications. FEP is preferred for jacket material. Non-flammable Good outgassing characteris
ETFE (Dupont TM Tefzel)	Withstands physical abuse during and after installation Good high and low temperature properties High flex life Good outgassing characteristics Fair cold flow propertie
Crosslinked ETFE (Dupont TM Tefzel)	Higher strength than normal ETFE Resistant to cold flow and abrasion More resistant to radiation effects (to 5 x 10 ** 7 RADS) Higher maximum temperature than normal E
Aromatic Polyimide (Dupont TM Kapton)	Lightest weight wire insulation material. Commonly used with FEP or PTFE Teflon to form layered insulation tapes Excellent physical thermal and electric properties. Exc
Crosslinked Polyalkene	Dual extrusion which is fused by sintering. Combines excellent abrasion and cut through resistance of Polyvinylidene Fluoride (PVDF, PVF sub 2-Penwalt Corp. TM Kynar) with
Silicon Rubber	Excellent flexibility at low temperatures Excellent high voltage corona resistance Good radiation resistance (to 10 ** 8 RADS) Good cold flow resistance

Stranded Wire

The following Stranded Wire specifications are available for selection:

Military Specification	Description
MIL-W-22759	Polytetrafluoroethylene (PTFE), Ethylene Tetrafluoroethylene (ETFE) Insulated, Copper or Copper Alloy
MIL-W-81381	Fluorocarbon/Polyimide (FEP) Insulated, Copper or Copper Alloy

Publications
|
Calendar
|
Experts
Admin Login
|
Request Account
|
Feedback
|
Site Map
|
Help
|
Search
NEPP Program Manager:
Chuck Barnes, Jet Propulsion Laboratory
Responsible NASA Official:
Michael Sampson, NEPAG Manager
Website Comments:
Web Development Team
Last Modified:

August 8, 2001
AETD IT Security Banner
NASA Privacy Statement
Go to -
NEPP
|
NPSL
|
Wire
MIL-W-22759, Wire
Wire, PTFE, ETFE Insulated, Copper or Copper Alloy Conductor
Detail Specifications
Part Number/Ordering Explanation
Important! Application Notes
Insulation Material Application Guidelines
Revision History for MIL-W-22759 Listing in the NPSL
Updated: 01/14/04

Click on the link below to see the associated parts selection listing:

Detail Specification	Description
	Polytetrafluoroethylene (PTFE) Insulated, Copper or Copper Alloy Conductor
MIL-W-22759/9	Silver Coated, 1000 Volt, 200deg.C
MIL-W-22759/11	Silver Coated, 600 Volt, 200deg.C
MIL-W-22759/12	Nickel Coated, 600 Volt, 260deg.C
MIL-W-22759/20	Silver Coated, 1000 Volt, 200deg.C (High Strength Copper Alloy)
MIL-W-22759/22	Silver Coated, 600 Volt, 200deg.C (High Strength Copper Alloy)
MIL-W-22759/23	Nickel Coated, 600 Volt, 260deg.C (High Strength Copper Alloy)
	Ethylene Tetrafluoroethylene (ETFE) Insulated, Copper or Copper Alloy Conductor
MIL-W-22759/16	Extruded ETFE, Tin Coated, 600 Volt, 150deg.C, Medium Weight Insulation
MIL-W-22759/18	Extruded ETFE, Tin Coated, 600 Volt, 150deg.C, Light Weight Insulation
MIL-W-22759/32	Crosslinked ETFE, Tin Coated, 600 Volt, 150deg.C, Light Weight Insulation
MIL-W-22759/33	Crosslinked ETFE, Silver Coated, 600 Volt, 200deg.C, Light Weight Insulation (High Strength Copper Alloy)
MIL-W-22759/34	Crosslinked ETFE, Tin Coated, 600 Volt, 150deg.C, Normal Weight Insulation
MIL-W-22759/35	Crosslinked ETFE, Silver Coated, 600 Volt, 200deg.C, Normal Weight Insulation (High Stength Copper Alloy)
MIL-W-22759/41	Crosslinked ETFE, Nickel Coated, 600 Volt, 200deg.C, Normal Weight Insulation
MIL-W-22759/43	Crosslinked ETFE, Silver Coated, 600 Volt, 200deg.C, Normal Weight Insulation
MIL-W-22759/44	Crosslinked ETFE, Silver Coated, 600 Volt, 200deg.C, Light Weight Insulation
MIL-W-22759/45	Crosslinked ETFE, Nickel Coated, 600 Volt, 200deg.C, Light Weight Insulation

APPLICATION NOTES FOR MIL-W-22759

Flammability properties of these wires are controlled by the applicable specifications. However, applications in Space Transportation System (STS) payloads may require that the specific STS flammability hazards be addressed. Users are advised to consult the appropriate project systems safety officer.

Due to the cold flow phenomena of teflon insulation, the designer is advised NOT to route teflon insulated wires over sharp edges and tight turns, or apply tight stitches and tie wraps to cable assemblies.

Silver coated copper is susceptible to cuprous oxide corrosion ("Red Plague") when produced, stored, or used in a moist or high humidity environment. The environment for this type of wire must be controlled.

Some ETFE insulated wire has been found to fail flammability testing in a 30% oxygen environment.

For cable bundles of 51 to 139 wires, refer to MIL-STD-681 for additional color designators.

Use of conductor sizes of 24 and larger are preferred in interconnecting cable and harness assemblies. When smaller conductors are necessary, high strength copper alloy shall be used, (REF: NASA NTS8739.(3G-2) Workmanship Standard for Crimping, Interconnecting Cables, Harnesses, and Wiring [Formerly NHB 5300.4(3G)]). Refer to NTS8739.(3G-2) for design practice assistance.

The insulation material table linked

HERE

is provided for application assistance.

CAUTION!!!

Some fluoropolymer insulation materials such as Ethylene-Tetrafluoroethylene (ETFE) may outgas trace amounts of fluorine over time. NASA GSFC Advisory

NA-GSFC-2003-03

(Dec. 2002) addresses corrosion concerns for metal shell connectors (especially microminiature and nanominiature types) and contacts that are terminated with

fluoropolymer insulated wire

AND

stored in sealed plastic/metal bags for several months or longer

. In sealed packages, Fluorine that is outgassed may react with moisture to form highly corrosive hydrofluoric acid. This acid is capable of corroding metals such as Nickel and Gold which are commonly used finishes for spaceflight connectors and contacts.

As a precaution for all flight hardware with pre-wired connector assemblies, the following mitigations are recommended by NA-GSFC-2003-03:

Projects should inspect the connectors upon receipt (both the shell and contacts) using appropriate magnification to verify that there is no corrosion. The existing inventory of pre-wired connector assemblies should be reinspected. In addition, all assemblies should be inspected before use. Inspect for darkening of the shiny metal surfaces. All connector interfaces should be covered with protective dust covers. For assemblies that have already been integrated into flight hardware and that were inspected and found to be acceptable before mating, there should be no concern for subsequent malfunction.

The pre-wired connector assemblies should be removed from sealed bags and stored in open packages that will allow any reactive fluorine compound (s) to escape. Connector assemblies should be stored in a controlled humidity environment. The preferable storage area for pre-wired connector assemblies would be in a dry nitrogen atmosphere.

Revision History for MIL-W-22759 Listing in the NPSL

01/14/04	Added Application Note (ref: NASA GSFC Advisory NA-GSFC-2003-03) on subject of Corrosion of Connectors and Contacts Due to Outgassing of Fluorine Compounds from Fluoropolymer Insulated Wire
03/13/98	Initial Release of MIL-W-22759 Wire Section in the NPSL

Part Number Ordering Information, example and explanation:

M22759/11-22-90, where

M22759	/11	-22	-90
Military Specification Number	Detail Specification	Wire Size (AWG)	Color Code in Accordance with MIL-STD-681

Detail Specification	Description
	Polytetrafluoroethylene (PTFE) Insulated, Copper or Copper Alloy Conductor
MIL-W-22759/11	Silver Coated, 600 Volt, 200deg.C
MIL-W-22759/12	Nickel Coated, 600 Volt, 260deg.C
MIL-W-22759/22	Silver Coated, 600 Volt, 200deg.C (High Strength Copper Alloy)
MIL-W-22759/23	Nickel Coated, 600 Volt, 260deg.C (High Strength Copper Alloy)
MIL-W-22759/9	Silver Coated, 1000 Volt, 200deg.C
MIL-W-22759/20	Silver Coated, 1000 Volt, 200deg.C (High Strength Copper Alloy)
	Ethylene Tetrafluoroethylene (ETFE) Insulated, Copper or Copper Alloy Conductor
MIL-W-22759/16	Extruded ETFE, Tin Coated, 600 Volt, 150deg.C, Medium Weight Insulation
MIL-W-22759/18	Extruded ETFE, Tin Coated, 600 Volt, 150deg.C, Light Weight Insulation
MIL-W-22759/32	Crosslinked ETFE, Tin Coated, 600 Volt, 150deg.C, Light Weight Insulation
MIL-W-22759/34	Crosslinked ETFE, Tin Coated, 600 Volt, 150deg.C, Normal Weight Insulation
MIL-W-22759/33	Crosslinked ETFE, Silver Coated, 600 Volt, 200deg.C, Light Weight Insulation (High Strength Copper Alloy)
MIL-W-22759/35	Crosslinked ETFE, Silver Coated, 600 Volt, 200deg.C, Normal Weight Insulation (High Stength Copper Alloy)
MIL-W-22759/41	Crosslinked ETFE, Nickel Coated, 600 Volt, 200deg.C, Normal Weight Insulation

MIL-W-22759/43	Crosslinked ETFE, Silver Coated, 600 Volt, 200deg.C, Normal Weight Insulation
MIL-W-22759/44	Crosslinked ETFE, Silver Coated, 600 Volt, 200deg.C, Light Weight Insulation
MIL-W-22759/45	Crosslinked ETFE, Nickel Coated, 600 Volt, 200deg.C, Light Weight Insulation

MIL-W-22759/9

Wire, PTFE Insulated, 1000 V, Silver Coated Copper Conductors, 200deg.C

Part Number	Wire Size (AWG)	Stranding (Number of Strands x AWG Size of Each Strand)	Finished Wire Diameter (Inches)	Level
M22759/9-28-XX	28	7 x 36	0.043 +/- 0.002	1 or 2
M22759/9-26-XX	26	19 x 38	0.048 +/- 0.002	1 or 2
M22759/9-24-XX	24	19 x 36	0.053 +/- 0.002	1 or 2
M22759/9-22-XX	22	19 x 34	0.060 +/- 0.002	1 or 2
M22759/9-20-XX	20	19 x 32	0.068 +/- 0.002	1 or 2
M22759/9-18-XX	18	19 x 30	0.078 +/- 0.002	1 or 2
M22759/9-16-XX	16	19 x 29	0.085 +/- 0.002	1 or 2
M22759/9-14-XX	14	19 x 27	0.100 +/- 0.003	1 or 2
M22759/9-12-XX	12	19 x 25	0.120 +/- 0.004	1 or 2
M22759/9-10-XX	10	37 x 26	0.141 +/- 0.004	1 or 2
M22759/9-8-XX	8	133 x 29	0.207 +/- 0.003	1 or 2

Note:

"XX" in the part number shall be replaced with the desired

color code designators

in accordance with MIL-STD-681

The following manufacturers are qualified to produce MIL-W-22759/9 wire.

Astro Industries

BICC Brand Rex

CommScope (Formerly Teledyne Thermatics)

Harbour Industries, Inc.

Intech, Division of Belden

Specialty Cable Corp.

Tensolite Company

Thermax Wire Corp.

Click Here for Manufacturer Names and Addresses

MIL-W-22759/11

Wire, PTFE Insulated, 600 V, Silver Coated Copper Conductors, 200deg.C

Part Number	Wire Size (AWG)	Stranding (Number of Strands x AWG Size of Each Strand)	Finished Wire Diameter (Inches)	Level
M22759/11-28-XX	28	7 x 36	0.033 +/- 0.002	1 or 2
M22759/11-26-XX	26	19 x 38	0.038 +/- 0.002	1 or 2
M22759/11-24-XX	24	19 x 36	0.043 +/- 0.002	1 or 2

M22759/11-22-XX	22	19 x 34	0.049 +/- 0.002	1 or 2
M22759/11-20-XX	20	19 x 32	0.058 +/- 0.002	1 or 2
M22759/11-18-XX	18	19 x 30	0.068 +/- 0.002	1 or 2
M22759/11-16-XX	16	19 x 29	0.075 +/- 0.002	1 or 2
M22759/11-14-XX	14	19 x 27	0.090 +/- 0.002	1 or 2
M22759/11-12-XX	12	19 x 25	0.111 +/- 0.003	1 or 2
M22759/11-10-XX	10	37 x 26	0.139 +/- 0.004	1 or 2
M22759/11-8-XX	8	133 x 29	0.202 +/- 0.004	1 or 2

Note:
"XX" in the part number shall be replaced with the desired
color code designators
in accordance with MIL-STD-681
The following manufacturers are qualified to produce MIL-W-22759/11 wire.
Astro Industries
BICC Brand Rex
CommScope (Formerly Teledyne Thermatics)
Harbour Industries Ltd.
Intech, Division of Belden
Specialty Cable Corp.
Tensolite Company
Thermax Wire Corp.
Click Here for Manufacturer Names and Addresses

MIL-W-22759/12
Wire, PTFE Insulated, 600 V, Nickel Coated Copper Conductors, 260deg.C

Part Number	Wire Size (AWG)	Stranding (Number of Strands x AWG Size of Each Strand)	Finished Wire Diameter (Inches)	Level
M22759/12-28-XX	28	7 x 36	0.033 +/- 0.002	1 or 2
M22759/12-26-XX	26	19 x 38	0.038 +/- 0.002	1 or 2
M22759/12-24-XX	24	19 x 36	0.043 +/- 0.002	1 or 2
M22759/12-22-XX	22	19 x 34	0.049 +/- 0.002	1 or 2
M22759/12-20-XX	20	19 x 32	0.058 +/- 0.002	1 or 2
M22759/12-18-XX	18	19 x 30	0.068 +/- 0.002	1 or 2
M22759/12-16-XX	16	19 x 29	0.075 +/- 0.002	1 or 2
M22759/12-14-XX	14	19 x 27	0.090 +/- 0.002	1 or 2
M22759/12-12-XX	12	19 x 25	0.111 +/- 0.003	1 or 2
M22759/12-10-XX	10	37 x 26	0.139 +/- 0.004	1 or 2
M22759/12-8-XX	8	133 x 29	0.202 +/- 0.004	1 or 2

Note:
"XX" in the part number shall be replaced with the desired

color code designators
in accordance with MIL-STD-681
The following manufacturers are qualified to produce MIL-W-22759/12 wire.
Astro Industries
Axon Cable S.A.
BICC Brand Rex
CommScope (Formerly Teledyne Thermatics)
Harbour Industries Ltd.
Intech, Division of Belden
Specialty Cable Corp.
Tensolite Company
Thermax Wire Corp.
Click Here for Manufacturer Names and Addresses

MIL-W-22759/16
Wire, ETFE Insulated, 600 V, Medium Weight, Tin Coated Copper Conductors, 150deg.C

Part Number	Wire Size (AWG)	Stranding (Number of Strands x AWG Size of Each Strand)	Finished Wire Diameter (Inches)	Level
M22759/16-24-XX	24	19 x 36	0.045 +/- 0.002	1 or 2
M22759/16-22-XX	22	19 x 34	0.052 +/- 0.002	1 or 2
M22759/16-20-XX	20	19 x 32	0.060 +/- 0.002	1 or 2
M22759/16-18-XX	18	19 x 30	0.071 +/- 0.002	1 or 2
M22759/16-16-XX	16	19 x 29	0.079 +/- 0.002	1 or 2
M22759/16-14-XX	14	19 x 27	0.093 +/- 0.002	1 or 2
M22759/16-12-XX	12	19 x 25	0.114 +/- 0.003	1 or 2
M22759/16-10-XX	10	37 x 26	0.139 +/- 0.003	1 or 2
M22759/16-8-XX	8	133 x 29	0.199 +/- 0.003	1 or 2
M22759/16-6-XX	6	133 x 27	0.250 +/- 0.003	1 or 2
M22759/16-4-XX	4	133 x 25	0.312 +/- 0.004	1 or 2
M22759/16-2-XX	2	665 x 30	0.388 +/- 0.004	1 or 2
M22759/16-1-XX	1	817 x 30	0.431 +/- 0.005	1 or 2
M22759/16-01-XX	0	1045 x 30	0.479 +/- 0.006	1 or 2
M22759/16-02-XX	00	1330 x 30	0.546 +/- 0.007	1 or 2

Note:
"XX" in the part number shall be replaced with the desired
color code designators
in accordance with MIL-STD-681
The following manufacturers are qualified to produce MIL-W-22759/16 wire.
Barcel Wire Cable
BICC Brand Rex
CommScope (Formerly Teledyne Thermatics)
Harbour Industries Inc.

Intech, Division of Belden

Rockbestos/Suprenant

Specialty Cable Corp.

Thermax Wire Corp.

Click Here for Manufacturer Names and Addresses

MIL-W-22759/18

Wire, ETFE Insulated, 600 V, Light Weight, Tin Coated Copper Conductors, 150deg.C

Part Number	Wire Size (AWG)	Stranding (Number of Strands x AWG Size of Each Strand)	Finished Wire Diameter (Inches)	Level
M22759/18-26-XX	26	19 x 38	0.032 +/- 0.002	1 or 2
M22759/18-24-XX	24	19 x 36	0.036 +/- 0.002	1 or 2
M22759/18-22-XX	22	19 x 34	0.043 +/- 0.002	1 or 2
M22759/18-20-XX	20	19 x 32	0.051 +/- 0.002	1 or 2
M22759/18-18-XX	18	19 x 30	0.061 +/- 0.002	1 or 2
M22759/18-16-XX	16	19 x 29	0.070 +/- 0.002	1 or 2
M22759/18-14-XX	14	19 x 27	0.085 +/- 0.002	1 or 2
M22759/18-12-XX	12	19 x 25	0.107 +/- 0.003	1 or 2
M22759/18-10-XX	10	37 x 26	0.134 +/- 0.003	1 or 2

Note: "XX" in the part number shall be replaced with the desired

color code designators

in accordance with MIL-STD-681

The following manufacturers are qualified to produce MIL-W-22759/18 wire.

Barcel Wire Cable

BICC Brand Rex

CommScope (Formerly Teledyne Thermatics)

Harbour Industries, Inc. (USA)

Intech ICI, Division of Belden

Rockbestos/Suprenant

Specialty Cable Corp.

Thermax Wire Corp.

Click Here for Manufacturer Names and Addresses

MIL-W-22759/20

Wire, PTFE Insulated, 1000 V, Silver Coated, High Strength Copper Conductors, 200deg.C

Part Number	Wire Size (AWG)	Stranding (Number of Strands x AWG Size of Each Strand)	Finished Wire Diameter (Inches)	Level
M22759/20-28-XX	28	7 x 36	0.043 +/- 0.002	1 or 2
M22759/20-26-XX	26	19 x 38	0.048 +/- 0.002	1 or 2
M22759/20-24-XX	24	19 x 36	0.053 +/- 0.002	1 or 2
M22759/20-22-XX	22	19 x 34	0.060 +/- 0.002	1 or 2
M22759/20-20-XX	20	19 x 32	0.068 +/- 0.002	1 or 2

Note:
"XX" in the part number shall be replaced with the desired
color code designators
in accordance with MIL-STD-681
The following manufacturers are qualified to produce MIL-W-22759/20 wire.
BICC Brand Rex
CommScope (Formerly Teledyne Thermatics)
Harbour Industries, Inc.
Intech, Division of Belden
Specialty Cable Corp.
Tensolite Company
Thermax Wire Corp.
Click Here for Manufacturer Names and Addresses
MIL-W-22759/22
Wire, PTFE Insulated, 600 V, Silver Coated Copper Conductors, High Strength, 200deg.C

Part Number	Wire Size (AWG)	Stranding (Number of Strands x AWG Size of Each Strand)	Finished Wire Diameter (Inches)	Level
M22759/22-28-XX	28	7 x 36	0.033 +/- 0.002	1 or 2
M22759/22-26-XX	26	19 x 38	0.038 +/- 0.002	1 or 2
M22759/22-24-XX	24	19 x 36	0.043 +/- 0.002	1 or 2
M22759/22-22-XX	22	19 x 34	0.049 +/- 0.002	1 or 2
M22759/22-20-XX	20	19 x 32	0.058 +/- 0.002	1 or 2

Notes:
"XX" in the part number shall be replaced with the desired
color code designators
in accordance with MIL-STD-681
The following manufacturers are qualified to produce MIL-W-22759/22 wire.
BICC Brand Rex
CommScope (Formerly Teledyne Thermatics)
Harbour Industries Inc.
Intech, Division of Belden
Specialty Cable Corp.
Tensolite Company
Thermax Wire Corp.
Click Here for Manufacturer Names and Addresses
MIL-W-22759/23
Wire, PTFE Insulated, 600 V, Nickel Coated Copper Conductors, High Strength, 260deg.C

Part Number	Wire Size (AWG)	Stranding (Number of Strands x AWG Size of Each Strand)	Finished Wire Diameter (Inches)	Level
M22759/23-28-XX	28	7 x 36	0.033 +/- 0.002	1 or 2
M22759/23-26-XX	26	19 x 38	0.038 +/- 0.002	1 or 2
M22759/23-24-XX	24	19 x 36	0.043 +/- 0.002	1 or 2
M22759/23-22-XX	22	19 x 34	0.049 +/- 0.002	1 or 2
M22759/23-20-XX	20	19 x 32	0.058 +/- 0.002	1 or 2

Note: "XX" in the part number shall be replaced with the desired
color code designators
in accordance with MIL-STD-681
The following manufacturers are qualified to produce MIL-W-22759/23 wire.
BICC Brand Rex
CommScope (Formerly Teledyne Thermatics)
Harbour Industries Inc.
Intech, Division of Belden
Specialty Cable Corp.
Tensolite Company
Thermax Wire Corp.
Click Here for Manufacturer Names and Addresses
MIL-W-22759/32
Wire, ETFE Insulated, Light Weight, 600 V, Tin Coated Copper Conductors, 150deg.C

Part Number	Wire Size (AWG)	Stranding (Number of Strands x AWG Size of Each Strand)	Finished Wire Diameter (Inches)	Level
M22759/32-30-XX	30	7 x 38	0.024 +/- 0.002	1 or 2
M22759/32-28-XX	28	7 x 36	0.027 +/- 0.002	1 or 2
M22759/32-26-XX	26	19 x 38	0.032 +/- 0.002	1 or 2
M22759/32-24-XX	24	19 x 36	0.037 +/- 0.002	1 or 2
M22759/32-22-XX	22	19 x 34	0.043 +/- 0.002	1 or 2
M22759/32-20-XX	20	19 x 32	0.050 +/- 0.002	1 or 2
M22759/32-18-XX	18	19 x 30	0.060 +/- 0.002	1 or 2
M22759/32-16-XX	16	19 x 29	0.068 +/- 0.002	1 or 2
M22759/32-14-XX	14	19 x 27	0.085 +/- 0.003	1 or 2
M22759/32-12-XX	12	37 x 28	0.103 +/- 0.004	1 or 2

Note: "XX" in the part number shall be replaced with the desired
color code designators
in accordance with MIL-STD-681
The following manufacturers are qualified to produce MIL-W-22759/32 wire.
BICC Brand Rex
CommScope (Formerly Teledyne Thermatics)

Judd Wire

Raychem Corp.

Rockbestos/Suprenant

Click Here for Manufacturer Names and Addresses

MIL-W-22759/33

Wire, ETFE Insulated, Light Weight, 600 V,

Silver Coated High Strength Copper Conductors, 200deg.C

Part Number	Wire Size (AWG)	Stranding (Number of Strands x AWG Size of Each Strand)	Finished Wire Diameter (Inches)	Level
M22759/33-30-XX	30	7 x 38	0.024 +/- 0.002	1 or 2
M22759/33-28-XX	28	7 x 36	0.027 +/- 0.002	1 or 2
M22759/33-26-XX	26	19 x 38	0.032 +/- 0.002	1 or 2
M22759/33-24-XX	24	19 x 36	0.037 +/- 0.002	1 or 2
M22759/33-22-XX	22	19 x 34	0.043 +/- 0.002	1 or 2
M22759/33-20-XX	20	19 x 32	0.050 +/- 0.002	1 or 2

Note: "XX" in the part number shall be replaced with the desired

color code designators

in accordance with MIL-STD-681

The following manufacturers are qualified to produce MIL-W-22759/33 wire.

BICC Brand Rex

CommScope (Formerly Teledyne Thermatics)

Judd Wire

Raychem Corp.

Rockbestos/Suprenant

Click Here for Manufacturer Names and Addresses

MIL-W-22759/34

Wire, ETFE Insulated, 600 V, Normal Weight, Tin Coated Copper Conductors, 150deg.C

Part Number	Wire Size (AWG)	Stranding (Number of Strands x AWG Size of Each Strand)	Finished Wire Diameter (Inches)	Level
M22759/34-24-XX	24	19 x 36	0.045 +/- 0.002	1 or 2
M22759/34-22-XX	22	19 x 34	0.050 +/- 0.002	1 or 2
M22759/34-20-XX	20	19 x 32	0.058 +/- 0.002	1 or 2
M22759/34-18-XX	18	19 x 30	0.070 +/- 0.003	1 or 2
M22759/34-16-XX	16	19 x 29	0.077 +/- 0.003	1 or 2
M22759/34-14-XX	14	19 x 27	0.094 +/- 0.003	1 or 2
M22759/34-12-XX	12	19 x 25	0.111 +/- 0.003	1 or 2
M22759/34-10-XX	10	37 x 26	0.134 +/- 0.004	1 or 2
M22759/34-8-XX	8	133 x 29	0.195 +/- 0.008	1 or 2
M22759/34-6-XX	6	133 x 27	0.241 +/- 0.010	1 or 2
M22759/34-4-XX	4	133 x 25	0.310 +/- 0.010	1 or 2

Note: "XX" in the part number shall be replaced with the desired
color code designators
in accordance with MIL-STD-681
The following manufacturers are qualified to produce MIL-W-22759/34 wire.
BICC Brand Rex
CommScope (Formerly Teledyne Thermatics)
Judd Wire
Raychem Corp.
Rockbestos/Suprenant
Click Here for Manufacturer Names and Addresses
MIL-W-22759/35
Wire, ETFE Insulated, 600 V, Normal Weight,
Silver Coated High Strength Copper Conductors, 200deg.C

Part Number	Wire Size (AWG)	Stranding (Number of Strands x AWG Size of Each Strand)	Finished Wire Diameter (Inches)	Level
M22759/35-26-XX	26	19 x 38	0.040 +/- 0.002	1 or 2
M22759/35-24-XX	24	19 x 36	0.045 +/- 0.002	1 or 2
M22759/35-22-XX	22	19 x 34	0.050 +/- 0.002	1 or 2
M22759/35-20-XX	20	19 x 32	0.058 +/- 0.002	1 or 2
M22759/35-18-XX	18	19 x 30	0.070 +/- 0.003	1 or 2

Note: "XX" in the part number shall be replaced with the desired
color code designators
in accordance with MIL-STD-681
The following manufacturers are qualified to produce MIL-W-22759/35 wire.
BICC Brand Rex
CommScope (Formerly Teledyne Thermatics)
Judd Wire
Raychem Corp.
Rockbestos/Suprenant
Click Here for Manufacturer Names and Addresses
MIL-W-22759/41
Wire, ETFE Insulated, 600 V, Normal Weight, Nickel Coated Copper Conductors, 200deg.C

Part Number	Wire Size (AWG)	Stranding (Number of Strands x AWG Size of Each Strand)	Finished Wire Diameter (Inches)	Level
M22759/41-26-XX	26	19 x 38	0.040 +/- 0.002	1 or 2
M22759/41-24-XX	24	19 x 36	0.045 +/- 0.002	1 or 2
M22759/41-22-XX	22	19 x 34	0.050 +/- 0.002	1 or 2
M22759/41-20-XX	20	19 x 32	0.058 +/- 0.002	1 or 2

M22759/41-18-XX	18	19 x 30	0.070 +/- 0.003	1 or 2
M22759/41-16-XX	16	19 x 29	0.077 +/- 0.003	1 or 2
M22759/41-14-XX	14	19 x 27	0.094 +/- 0.003	1 or 2
M22759/41-12-XX	12	19 x 25	0.111 +/- 0.003	1 or 2
M22759/41-10-XX	10	37 x 26	0.134 +/- 0.004	1 or 2
M22759/41-8-XX	8	133 x 29	0.195 +/- 0.008	1 or 2
M22759/41-6-XX	6	133 x 27	0.241 +/- 0.010	1 or 2
M22759/41-4-XX	4	133 x 25	0.310 +/- 0.010	1 or 2

Note: "XX" in the part number shall be replaced with the desired
color code designators
in accordance with MIL-STD-681
The following manufacturers are qualified to produce MIL-W-22759/41 wire.
BICC Brand Rex
CommScope (Formerly Teledyne Thermatics)
Judd Wire
Raychem Corp.
Rockbestos/Suprenant
Click Here for Manufacturer Names and Addresses

MIL-W-22759/43
Wire, ETFE Insulated, 600 V, Normal Weight, Silver Coated Copper Conductors, 200deg.C

Part Number	Wire Size (AWG)	Stranding (Number of Strands x AWG Size of Each Strand)	Finished Wire Diameter (Inches)	Level
M22759/43-26-XX	26	19 x 38	0.040 +/- 0.002	1 or 2
M22759/43-24-XX	24	19 x 36	0.045 +/- 0.002	1 or 2
M22759/43-22-XX	22	19 x 34	0.050 +/- 0.002	1 or 2
M22759/43-20-XX	20	19 x 32	0.058 +/- 0.002	1 or 2
M22759/43-18-XX	18	19 x 30	0.070 +/- 0.003	1 or 2
M22759/43-16-XX	16	19 x 29	0.077 +/- 0.003	1 or 2
M22759/43-14-XX	14	19 x 27	0.094 +/- 0.003	1 or 2
M22759/43-12-XX	12	19 x 25	0.111 +/- 0.003	1 or 2
M22759/43-10-XX	10	37 x 26	0.134 +/- 0.004	1 or 2
M22759/43-8-XX	8	133 x 29	0.195 +/- 0.008	1 or 2
M22759/43-6-XX	6	133 x 27	0.241 +/- 0.010	1 or 2
M22759/43-4-XX	4	133 x 25	0.310 +/- 0.010	1 or 2

Note: "XX" in the part number shall be replaced with the desired
color code designators
in accordance with MIL-STD-681
The following manufacturers are qualified to produce MIL-W-22759/43 wire.
BICC Brand Rex
CommScope (Formerly Teledyne Thermatics)

Judd Wire

Raychem Corp.

Rockbestos/Suprenant

Click Here for Manufacturer Names and Addresses

MIL-W-22759/44

Wire, ETFE Insulated, Light Weight, 600 V, Silver Coated Copper Conductors, 200deg.C

Part Number	Wire Size (AWG)	Stranding (Number of Strands x AWG Size of Each Strand)	Finished Wire Diameter (Inches)	Level
M22759/44-28-XX	28	7 x 36	0.027 +/- 0.002	1 or 2
M22759/44-26-XX	26	19 x 38	0.032 +/- 0.002	1 or 2
M22759/44-24-XX	24	19 x 36	0.037 +/- 0.002	1 or 2
M22759/44-22-XX	22	19 x 34	0.043 +/- 0.002	1 or 2
M22759/44-20-XX	20	19 x 32	0.050 +/- 0.002	1 or 2
M22759/44-18-XX	18	19 x 30	0.060 +/- 0.002	1 or 2
M22759/44-16-XX	16	19 x 29	0.068 +/- 0.002	1 or 2
M22759/44-14-XX	14	19 x 27	0.085 +/- 0.003	1 or 2
M22759/44-12-XX	12	37 x 28	0.103 +/- 0.004	1 or 2

Note: "XX" in the part number shall be replaced with the desired

color code designators

in accordance with MIL-STD-681

The following manufacturers are qualified to produce MIL-W-22759/44 wire.

BICC Brand Rex

CommScope (Formerly Teledyne Thermatics)

Judd Wire

Raychem Corp.

Rockbestos/Suprenant

Click Here for Manufacturer Names and Addresses

MIL-W-22759/45

Wire, ETFE Insulated, Light Weight, 600 V, Nickel Coated Copper Conductors, 200deg.C

Part Number	Wire Size (AWG)	Stranding (Number of Strands x AWG Size of Each Strand)	Finished Wire Diameter (Inches)	Level
M22759/45-28-XX	28	7 x 36	0.027 +/- 0.002	1 or 2
M22759/45-26-XX	26	19 x 38	0.032 +/- 0.002	1 or 2
M22759/45-24-XX	24	19 x 36	0.037 +/- 0.002	1 or 2
M22759/45-22-XX	22	19 x 34	0.043 +/- 0.002	1 or 2
M22759/45-20-XX	20	19 x 32	0.050 +/- 0.002	1 or 2
M22759/45-18-XX	18	19 x 30	0.060 +/- 0.002	1 or 2
M22759/45-16-XX	16	19 x 29	0.068 +/- 0.002	1 or 2
M22759/45-14-XX	14	19 x 27	0.085 +/- 0.003	1 or 2
M22759/45-12-XX	12	37 x 28	0.103 +/- 0.004	1 or 2

Note: "XX" in the part number shall be replaced with the desired
color code designators
in accordance with MIL-STD-681
The following manufacturers are qualified to produce MIL-W-22759/45 wire.
BICC Brand Rex
CommScope (Formerly Teledyne Thermatics)
Judd Wire
Raychem Corp.
Rockbestos/Suprenant
Click Here for Manufacturer Names and Addresses
MIL-STD-681
Color Code Designators for Wire
(See Application Note 5 of MIL-W-22759 Section)

Designator	Base Color	1st Stripe	2nd Stripe		Designator	Base Color	1st Stripe	2nd Stripe
0	Black				912	White	Brown	Red
1	Brown				913	White	Brown	Orange
2	Red				914	White	Brown	Yellow
3	Orange				915	White	Brown	Green
4	Yellow				916	White	Brown	Glue
5	Green				917	White	Brown	Violet
6	Blue				918	White	Brown	Gray
7	Violet							
8	Gray				923	White	Red	Orange
9	White				924	White	Red	Yellow
					925	White	Red	Green
90	White	Black			926	White	Red	Blue
91	White	Brown			927	White	Red	Violet
92	White	Red			928	White	Red	Gray
93	White	Orange						
94	White	Yellow			934	White	Orange	Yellow
95	White	Green			935	White	Orange	Green
96	White	Blue			936	White	Orange	Blue
97	White	Violet			937	White	Orange	Violet
98	White	Gray			938	White	Orange	Gray
901	White	Black	Brown		945	White	Yellow	Green
902	White	Black	Red		946	White	Yellow	Blue
903	White	Black	Orange		947	White	Yellow	Violet
904	White	Black	Yellow		948	White	Yellow	Gray
905	White	Black	Green					
906	White	Black	Blue		956	White	Green	Blue
907	White	Black	Violet		957	White	Green	Violet

908	White	Black	Gray		958	White	Green	Gray
					967	White	Blue	Violet
					968	White	Blue	Gray
					978	White	Violet	Gray

Coaxial Cable

The following Coaxial Cable specifications are available for selection:

Military Specification	Description
MIL-C-17	Radio Frequency Coaxial Cable, Flexible and Semi-Rigid

Parts

|

Packaging

|

Radiation

|

Publications

|

Calendar

|

Experts

Admin Login

|

Request Account

|

Feedback

|

Site Map

|

Help

|

Search

NEPP Program Manager:

Chuck Barnes, Jet Propulsion Laboratory

Responsible NASA Official:

Michael Sampson, NEPAG Manager

Website Comments:

Web Development Team

Last Modified:

August 8, 2001

AETD IT Security Banner

NASA Privacy Statement

Go to -

NEPP

|

NPSL

|

Wire

MIL-C-17 Radio Frequency, Coaxial Cable

Detail Specifications

Part Number/Ordering Explanation

Important! Application Notes

Revision History for MIL-C-17 Listing in the NPSL

Last Revision: 03/18/98

Click on the link below to see the associated parts selection listing:

Detail Specification	Type Designation	Generic Type Designation	Impedance (Ohms)	Cable Type
MIL-C-17/60	M17/60-RG142	RG142/U	50 +/- 2	Flexible
MIL-C-17/93	M17/93-RG178	RG178/U	50 +/- 2	Flexible
MIL-C-17/95	M17/95-RG180	RG180/U	95 +/- 5	Flexible
MIL-C-17/110	M17/110-RG302	RG302/U	75 +/- 3	Flexible
MIL-C-17/111	M17/111-RG303	RG303/U	50 +/- 2	Flexible
MIL-C-17/113	M17/113-RG316	RG316/U	50 +/- 2	Flexible
MIL-C-17/127	M17/127-RG393	RG393/U	50 +/- 2	Flexible
MIL-C-17/128	M17/128-RG400	RG400/U	50 +/- 2	Flexible
MIL-C-17/152	M17/152-00001	------	50 +/- 2	Flexible
MIL-C-17/130	M17/130-RG402	RG402/U	50 +/- 1	Semi-Rigid
MIL-C-17/133	M17/133-RG405	RG405/U	50 +/- 1.5	Semi-Rigid

APPLICATION NOTES FOR MIL-C-17

All cable has solid PTFE dielectric core. Flexible cable has FEP jacket. Semi-rigid cable outer conductor (shield) is bare copper.

The accommodating preferred connector for the RG180/U, RG302U and RG393/U is a 50 ohm SMA soldercup type.

There are no 75 ohm or 95 ohm impedance connectors to accommodate RG180/U or RG302/U cable. Due to impedance mismatch, performance ratings are not applicable.

Only SMA Series connectors are recommended for flight use with MIL-C-17 cable at NASA Goddard.

(See application Note for MIL-C-39012 style connectors for details)

.

M17/93-RG178 and M17/95-RG180 have very small center conductors measuring 0.012 inches which are easily damaged during stripping, soldering or handling. EXTREME caution is required during termination to connectors. Use of cable with larger center conductors is preferred.

Revision History for MIL-C-17 Listing in the NPSL

03/18/98	Updated the Manufacturer listing.
03/16/98	Initial Release of MIL-C-17 Coaxial Cable Section in the NPSL

Part Number Ordering Information:

Example of P/N: M17/60-RG142, where

M17	/60	-RG142
Military Specification Number	Detail Specification	Type Designation

Detail Specification	Generic Type Designation	Part Number
MIL-C-17/60	RG142/U	M17/60-RG142
MIL-C-17/93	RG178/U	M17/93-RG178
MIL-C-17/95	RG180/U	M17/95-RG180
MIL-C-17/110	RG302/U	M17/110-RG302
MIL-C-17/111	RG303/U	M17/111-RG303
MIL-C-17/113	RG316/U	M17/113-RG316
MIL-C-17/127	RG393/U	M17/127-RG393
MIL-C-17/128	RG400/U	M17/128-RG400
MIL-C-17/152	------	M17/152-00001
MIL-C-17/130	RG402/U	M17/130-RG402
MIL-C-17/133	RG405/U	M17/133-RG405

MIL-C-17/60 Radio Frequency Coaxial Cable

Part Number	Generic Type Designation	Connector Accommodating Series
M17/60-RG142	RG142/U	SMA, TNC, N

Characteristics

Impedance (Ohms)	Operating Frequency (Max. GHz)	Working Voltage (Vrms)	Capacitance (pF/ft)
50 +/- 2	12.4	1400	29.3 nominal

Type	Shielding	Temperature Range	Min. Diameter (Inches)	Max. Diameter (Inches)
Flexible	Double Braid	-55deg.C to +200deg.C	0.190	0.200

The following manufacturers are qualified to produce MIL-C-17/60 coaxial cable.

Belden Wire and Cable Company (Vermont)

CommScope (Formerly Teledyne Thermatics)

Harbour Industries, Inc.

Rockbestos Suprenant Cable Company

Specialty Cable Corp.

Tensolite Company

Thermax Wire L.P.

Times Microwave Systems, Inc.

Click Here for Manufacturer Names and Addresses

MIL-C-17/93 Radio Frequency Coaxial Cable

(Refer to Application Notes 5)

Part Number	Generic Type Designation	Connector Accommodating Series
M17/93-RG178	RG178/U	SMA

Characteristics

Impedance (Ohms)	Operating Frequency (Max. GHz)	Working Voltage (Vrms)	Capacitance (pF/ft)
50 +/- 2	3	750	32 max.

Type	Shielding	Temperature Range	Min. Diameter (Inches)	Max. Diameter (Inches)
Flexible	Single Braid	-55deg.C to +200deg.C	0.067	0.075

The following manufacturers are qualified to produce MIL-C-17/93 coaxial cable.

Harbour Industries, Inc.

Tensolite Company

Thermax Wire L.P.

Times Microwave Systems, Inc.

Click Here for Manufacturer Names and Addresses

MIL-C-17/95 Radio Frequency Coaxial Cable

(Refer to Application Notes 3 and 5)

Part Number

Generic Type Designation

Connector Accommodating Series

M17/95-RG180

RG180/U

SMA

Characteristics

Impedance (Ohms)	Operating Frequency (Max. GHz)	Working Voltage (Vrms)	Capacitance (pF/ft)
95 +/- 5	3	1100	17.4 max.

Type	Shielding	Temperature Range	Min. Diameter (Inches)	Max. Diameter (Inches)
Flexible	Single Braid	-55deg.C to +200deg.C	0.137	0.145

The following manufacturers are qualified to produce MIL-C-17/95 coaxial cable.

Belden Wire and Cable Company (Vermont)

Champlain Cable Corp.

CommScope (Formerly Teledyne Thermatics)

Harbour Industries, Inc.

Rockbestos Suprenant Cable Company

Specialty Cable Corp.

Tensolite Company

Thermax Wire L.P.

Times Microwave Systems, Inc.

Click Here for Manufacturer Names and Addresses

MIL-C-17/110 Radio Frequency Coaxial Cable

(Refer to Application Note 3)

Part Number	Generic Type Designation	Connector Accommodating Series
M17/110-RG302	RG302/U	SMA

Characteristics

Impedance (Ohms)	Operating Frequency (Max. GHz)	Working Voltage (Vrms)	Capacitance (pF/ft)
75 +/- 3	3	1700	22 max.

Type	Shielding	Temperature Range	Min. Diameter (Inches)	Max. Diameter (Inches)
Flexible	Single Braid	-55deg.C to +200deg.C	0.197	0.207

The following manufacturers are qualified to produce MIL-C-17/110 coaxial cable.

Harbour Industries, Inc.

Tensolite Company

Thermax Wire L.P.

Times Microwave Systems, Inc.

Click Here for Manufacturer Names and Addresses

MIL-C-17/111 Radio Frequency Coaxial Cable

Part Number

Generic Type Designation

Connector Accommodating Series

M17/111-RG303

RG303/U

SMA, TNC

Characteristics

Impedance (Ohms)	Operating Frequency (Max. GHz)	Working Voltage (Vrms)	Capacitance (pF/ft)
50 +/- 2	3	1400	32 max.

Type	Shielding	Temperature Range	Min. Diameter (Inches)	Max. Diameter (Inches)
Flexible	Single Braid	-55deg.C to +200deg.C	0.165	0.175

The following manufacturers are qualified to produce MIL-C-17/111 coaxial cable.

Belden Wire and Cable Company (Vermont)

CommScope (Formerly Teledyne Thermatics)

Harbour Industries, Inc.

Specialty Cable Corp.

Tensolite Company

Thermax Wire L.P.

Times Microwave Systems, Inc.

Click Here for Manufacturer Names and Addresses

MIL-C-17/113 Radio Frequency Coaxial Cable

Part Number

Generic Type Designation

Connector Accommodating Series

M17/113-RG316

RG316/U

SMA, TNC

Characteristics

Impedance (Ohms)	Operating Frequency (Max. GHz)	Working Voltage (Vrms)	Capacitance (pF/ft)
50 +/- 2	3	900	32 max.

Type	Shielding	Temperature Range	Min. Diameter (Inches)	Max. Diameter (Inches)

Flexible	Single Braid	-55deg.C to +200deg.C	0.094	0.102

The following manufacturers are qualified to produce MIL-C-17/113 coaxial cable.

Belden Wire and Cable Company (Vermont)

CommScope (Formerly Teledyne Thermatics)

Harbour Industries, Inc.

Specialty Cable Corp.

Tensolite Company

Thermax Wire L.P.

Times Microwave Systems, Inc.

Click Here for Manufacturer Names and Addresses

MIL-C-17/127 Radio Frequency Coaxial Cable

(See Application Notes)

Part Number	Generic Type Designation	Connector Accommodating Series
M17/127-RG393	RG393/U	SMA

Characteristics

Impedance (Ohms)	Operating Frequency (Max. GHz)	Working Voltage (Vrms)	Capacitance (pF/ft)
50 +/- 2	11	1875	32 max.

Type	Shielding	Temperature Range	Min. Diameter (Inches)	Max. Diameter (Inches)
Flexible	Double Braid	-55deg.C to +200deg.C	0.380	0.400

The following manufacturers are qualified to produce MIL-C-17/127 coaxial cable.

Harbour Industries, Inc.

Tensolite Company

Thermax Wire L.P.

Times Microwave Systems, Inc.

Click Here for Manufacturer Names and Add

resses

MIL-C-17/128 Radio Frequency Coaxial Cable

Part Number

Generic Type Designation

Connector Accommodating Series

M17/128-RG400

RG400/U

SMA, TNC, N

Characteristics

Impedance (Ohms)	Operating Frequency (Max. GHz)	Working Voltage (Vrms)	Capacitance (pF/ft)
50 +/- 2	12.4	1400	32 max.

Type	Shielding	Temperature Range	Min. Diameter (Inches)	Max. Diameter (Inches)
Flexible	Double Braid	-55deg.C to +200deg.C	0.190	0.200

The following manufacturers are qualified to produce MIL-C-17/128 coaxial cable.

Harbour Industries, Inc.

Tensolite Company

Thermax Wire L.P.

Times Microwave Systems, Inc.

Click Here for Manufacturer Names an

d Addresses

MIL-C-17/130 Radio Frequency Coaxial Cable

Part Number

Generic Type Designation

Connector Accommodating Series

M17/130-RG402

RG402/U

SMA

Characteristics

Impedance (Ohms)	Operating Frequency (Max. GHz)	Working Voltage (Vrms)	Capacitance (pF/ft)
50 +/- 1	20	1900	29.9 max.

Type	Shielding	Temperature Range	Min. Diameter (Inches)	Max. Diameter (Inches)
Semi-Rigid	Copper Tubing	-40deg.C to +125deg.C	0.140	0.142

The following manufacturers are qualified to produce MIL-C-17/130 coaxial cable.

Haverhill Cable and Manufacturing Corp.

Micro-Coax Components, Inc.

Precision Tube Company, Inc.

Times Microwave Systems, Inc.

Click Here for Manufacturer Names and Addresses

MIL-C-17/133 Radio Frequency Coaxial Cable

Part Number	Generic Type Designation	Connector Accommodating Series
M17/133-RG405	RG405/U	SMA

Characteristics

Impedance (Ohms)	Operating Frequency (Max. GHz)	Working Voltage (Vrms)	Capacitance (pF/ft)
50 +/- 1.5	20	1500	32 max.

Type	Shielding	Temperature Range	Min. Diameter (Inches)	Max. Diameter (Inches)
Semi-Rigid	Copper Tubing	-40deg.C to +125deg.C	0.0855	0.0875

The following manufacturers are qualified to produce MIL-C-17/133 coaxial cable.

Haverhill Cable and Manufacturing Corp.

Micro-Coax Components, Inc.

Precision Tube Company, Inc.

Times Microwave Systems, Inc.

Click Here for Manufacturer Names and Addresses

MIL-C-17/152 Radio Frequency Coaxial Cable

Part Number	Generic Type Designation	Connector Accommodating Series
M17/152-00001	-------	SMA

Characteristics

Impedance (Ohms)	Operating Frequency (Max. GHz)	Working Voltage (Vrms)	Capacitance (pF/ft)
50 +/- 2	12.4	900	32 max.

Type	Shielding	Temperature Range	Min. Diameter (Inches)	Max. Diameter (Inches)
Flexible	Double Braid	-55deg.C to +200deg.C	0.110	0.118

The following manufacturers are qualified to produce MIL-C-17/152 coaxial cable.

Harbour Industries, Inc.

Thermax Wire L.P.

Times Microwave Systems, Inc.

Click Here for Manufacturer Names and Addresses

Radio Frequency Cable Manufacturer Listing

Listed below are links to manufacturer data sites that may provide additional part related information. The linked sites are not under the control of NPSL and NASA is not responsible for information contained in the linked site. We are providing these links for your convenience only.

Belden Wire and Cable Company

Saxon Hill Industrial Park

Thompson Drive

P.O. Box 148

Essex Junction, VT 05452

CAGE Code: 16428

Champlain Cable Corporation

P.O. Box 7

Winooski, VT 05404

CAGE Code: 05973

CommScope, Inc. (Formerly Teledyne Thermatics)

P.O. Box 909

Elm City, NC 27822

CAGE Code: 12515

Harbour Industries, Inc. (USA)

Route 7

Shelburne, VT 05482

CAGE Code: 27478

Haverhill Cable and Manufacturing Corporation (Semi-Rigid Cable Only)

165 Ferry Road

Haverhill, MA 01835-9998

CAGE Code: 65344

Micro-Coax, Inc.

(Semi-Rigid Cable Only)

206 Jones Blvd

Pottstown, PA 19464-3465

CAGE Code: 64639

Precision Tube Company, Inc. (Semi-Rigid Cable Only)

620 Naylor Mill Road

Salisbury, MD 21801-0013

CAGE Code: 82413

Rockbestos/Suprenant

172 Sterling St.

Clinton, MA 01510

CAGE Code: 90484

Specialty Cable Corp.

2 Tower Drive, P.O. Box 50

Wallingford, CT 06492

CAGE Code: 60685

Tensolite Company

100 Tensolite Drive

St. Augustine, FL 32092

CAGE Code: 92607

Thermax Wire L.P.

Landmark Plaza

19-02 Whitestone Plaza

Whitestone, NY 11357

CAGE Code: 12814

Times Microwave Systems, Inc.

358 Hall Avenue

P.O. Box 384

Wallingford, CT 06492

CAGE Code: 68999

Wire Manufacturer Listing

Listed below are links to manufacturer data sites that may provide additional part related information. The linked sites are not under the control of NPSL and NASA is not responsible for information contained in the linked site. We are providing these links for your convenience only.

Barcel Wire Cable Corp.

2851 Alton Ave.

Irvine, CA 92714

CAGE Code: 28427

Belden Wire and Cable Company

Saxon Hill Industrial Park

Thompson Drive

P.O. Box 148

Essex Junction, VT 05452

CAGE Code: 16428

BICC Brand Rex

P.O. Box 498

1600 W. Main St.
Willimantic, CT 06226
CAGE Code: 71124
Champlain Cable Corporation
P.O. Box 7
Winooski, VT 05404
CAGE Code: 05973
CommScope, Inc. (Formerly Teledyne Thermatics)
P.O. Box 909
Elm City, NC 27822
CAGE Code: 12515
Harbour Industries, Inc. (USA)
Route 7
Shelburne, VT 05482
CAGE Code: 27478
Haverhill Cable and Manufacturing Corporation
165 Ferry Road
Haverhill, MA 01835-9998
CAGE Code: 65344
Intech ICI Cable Inc., Division of Belden
43 Broad Street
Hudson, MA 01749
CAGE Code: 12703
Judd Wire, Inc.
55 Turnpike Road
Turners Falls, MA 01376
CAGE Code: 12703
Precision Tube Company, Inc.
620 Naylor Mill Road
Salisbury, MD 21801-0013
CAGE Code: 82413
Raychem Corp.
300 Constitution Drive
Menlo Park, CA 94025
CAGE Code: 06090
Rockbestos/Suprenant
172 Sterling St.
Clinton, MA 01510
CAGE Code: 90484
Specialty Cable Corp.

2 Tower Drive, P.O. Box 50
Wallingford, CT 06492
CAGE Code: 60685

Tensolite Company
100 Tensolite Drive
St. Augustine, FL 32092
CAGE Code: 92607

Thermax Wire L.P.
Landmark Plaza
19-02 Whitestone Plaza
Whitestone, NY 11357
CAGE Code: 12814

Times Microwave Systems, Inc.
358 Hall Avenue
P.O. Box 384
Wallingford, CT 06492
CAGE Code: 68999

About NPSL
Prohibited Materials
Parts Selection Table of Contents
Capacitors
Circuit Protection Devices
Fuses
Connectors
Filters
Inductors
Microcircuits
NEW!
Monolithics
Hybrids
Resistors
Semiconductors
(Summary)
Diodes
Transistors
Thermistors
Wire and Cable

NASA Parts Selection List (NPSL)

National Space Development Agency of Japan (NASDA)

Device Classes

The parts manufactured by various Japanese companies that are listed in the NASDA QPL and in the NASA Core Suppliers List (CSL) Part II, are fabricated, assembled and tested in Japan. EEE parts for NASDA's space systems applications are based on two levels of reliability and quality assurance: Class I and Class II.

Class I parts are applied to systems, subsystems or equipment, which the NASDA project office has determined to be critical. For applications not requiring Class I parts, Class II parts are used.

The NASDA Class I parts are similar to Level 1 parts described in the NASA Parts Selection List recognized by NASA as providing the highest possible level of quality and reliability (e.g. QML Class V and K, QPL Class S, FRL S), from NASA approved manufacturing sources, and meeting NASA space level parts and packaging program assessment criteria.

The NASDA Class II parts are similar to Level 2 parts described in the NASA Parts Selection List considered by NASA to have a high level of quality and reliability (e.g. QML Q, QPL Class B, FRL P), from NASA approved manufacturing sources, and meeting NASA space level parts and packaging program assessment criteria.

The detailed information about NASDA manufacturers that are listed herein is supplied in

Core Suppliers List (CSL) Part II

.

NOTE: Unless specifically stated within the parts selection tables of the NPSL, listing of a device technology herein does NOT imply/guarantee Radiation Hardness Assurance (RHA). Applications that are concerned with a device's ability to tolerate exposure to various forms of space radiation (e.g., total ionizing dose, single event effects, etc.) should be reviewed and assessed by the Program's radiation assurance experts. The following resources may also be consulted for initial guidance:

NASA Goddard Radiation Effects and Analysis

Jet Propulsion Laboratory Radiation Effects

NEPP Program Manager:

Chuck Barnes, Jet Propulsion Laboratory

Responsible NASA Official:

Michael Sampson, NEPAG Manager

Website Comments:

Web Development Team

Last Modified:

August 8, 2001

AETD IT Security Banner

NASA Privacy Statement

Home

|

NASA Parts Selection List (NPSL)

|

Monolithic Microcircuits

|

NASDA Parts and Standards Program

|

Monolithic Microcircuits

| Buffers/Drivers

About NPSL

Prohibited Materials

Parts Selection Table of Contents

Capacitors

Circuit Protection Devices

Fuses

Connectors

Filters

Inductors

Microcircuits

NEW!

Monolithics

Hybrids

Resistors

Semiconductors

(Summary)

Diodes

Transistors

Thermistors

Wire and Cable

NASA Parts Selection List (NPSL)

National Space Development Agency of Japan (NASDA)

Manufacturer Details:

Active Supplier Assessment Program (ASAP) Core Suppliers List (CSL) Part II

General Information:

NASDA Parts and Standards Program

Last Update:

May 1999

High Speed CMOS (HCMOS)

Buffers/Drivers

NASDA Qualified Part #	Description	NASDA Detail Specification	Manufacturer	Device Class	Rad Hard Level	Notes
NASDA38510/65701DZH	Hex Inverter/Buffer	QTS-38510A/657	NEC	1	-	
NASDA38510/65702DZH	Hex Inverter, Schmitt Trigger	QTS-38510A/657	NEC	1	-	
NASDA38510/65708FZH	Hex Non-Inverting, 3-State Output Driver	QTS-38510A/657	NEC	1	-	

Parts

|

Packaging

|

Radiation

|

Publications

|

Calendar

|

Experts

Admin Login

|

Request Account

|

Feedback

|

Site Map

|

Help

|

Search

NEPP Program Manager:

Chuck Barnes, Jet Propulsion Laboratory

Responsible NASA Official:

Michael Sampson, NEPAG Manager

Website Comments:

Web Development Team

Last Modified:

August 8, 2001

AETD IT Security Banner

NASA Privacy Statement

Home

|

NASA Parts Selection List (NPSL)

|

Monolithic Microcircuits

|

NASDA Parts and Standards Program

|

Monolithic Microcircuits

| High Speed CMOS (HCMOS) Counters

About NPSL

Prohibited Materials

Parts Selection Table of Contents

Capacitors

Circuit Protection Devices

Fuses

Connectors

Filters

Inductors

Microcircuits

NEW!

Monolithics

Hybrids

Resistors

Semiconductors

(Summary)

Diodes

Transistors

Thermistors

Wire and Cable

NASA Parts Selection List (NPSL)

National Space Development Agency of Japan (NASDA)

Manufacturer Details:

Active Supplier Assessment Program (ASAP) Core Suppliers List (CSL) Part II

General Information:

NASDA Parts and Standards Program

Last Update:

May 1999

High Speed CMOS (HCMOS)

Counters

NASDA Qualified Part #	Description	NASDA Detail Specification	Manufacturer	Device Class	Rad Hard Level	Notes
NASDA38510/66302FZH	4-Bit Binary, Async Reset Counter	QTS-38510A/663	NEC	1	-	
NASDA38510/66305FZH	4-Bit Presettable Up-Down Counter	QTS-38510A/663	NEC	1	-	

Parts

|

Packaging

|

Radiation

|

Publications

|

Calendar

|

Experts

Admin Login

|

Request Account

|

Feedback

|

Site Map

|

Help

|

Search

NEPP Program Manager:

Chuck Barnes, Jet Propulsion Laboratory

Responsible NASA Official:

Michael Sampson, NEPAG Manager

Website Comments:

Web Development Team

Last Modified:

August 8, 2001

AETD IT Security Banner

NASA Privacy Statement

Home

|

NASA Parts Selection List (NPSL)

|

Monolithic Microcircuits

|

NASDA Parts and Standards Program

|

Monolithic Microcircuits

| High Speed CMOS (HCMOS) Flip Flops

About NPSL

Prohibited Materials

Parts Selection Table of Contents

Capacitors

Circuit Protection Devices

Fuses

Connectors

Filters

Inductors

Microcircuits

NEW!

Monolithics

Hybrids

Resistors

Semiconductors

(Summary)

Diodes

Transistors

Thermistors

Wire and Cable

NASA Parts Selection List (NPSL)

National Space Development Agency of Japan (NASDA)

Manufacturer Details:

Active Supplier Assessment Program (ASAP) Core Suppliers List (CSL) Part II

General Information:

NASDA Parts and Standards Program

Last Update:

May 1999

High Speed CMOS (HCMOS)

Flip-Flops

NASDA Qualified Part #	Description	NASDA Detail Specification	Manufacturer	Device Class	Rad Hard Level	Notes
NASDA38510/65302DZH	D-Type, Dual	QTS-38510A/653	NEC	1	-	
NASDA38510/65307FZH	D-Type, Hex w/clear	QTS-38510A/653	NEC	1	-	

Parts

|

Packaging

|

Radiation

|

Publications

|

Calendar

|

Experts

Admin Login

|

Request Account

|

Feedback

|

Site Map

|

Help

|

Search

NEPP Program Manager:

Chuck Barnes, Jet Propulsion Laboratory

Responsible NASA Official:

Michael Sampson, NEPAG Manager

Website Comments:

Web Development Team

Last Modified:

August 8, 2001

AETD IT Security Banner

NASA Privacy Statement

Home

|

NASA Parts Selection List (NPSL)

|

Monolithic Microcircuits

|

NASDA Parts and Standards Program

|

Monolithic Microcircuits

| High Speed CMOS (HCMOS) Gates

About NPSL

Prohibited Materials

Parts Selection Table of Contents

Capacitors

Circuit Protection Devices

Fuses

Connectors

Filters

Inductors

Microcircuits

NEW!

Monolithics

Hybrids

Resistors

Semiconductors

(Summary)

Diodes

Transistors

Thermistors

Wire and Cable

NASA Parts Selection List (NPSL)

National Space Development Agency of Japan (NASDA)

Manufacturer Details:

Active Supplier Assessment Program (ASAP) Core Suppliers List (CSL) Part II

General Information:

NASDA Parts and Standards Program

Last Update:

May 1999

High Speed CMOS (HCMOS)

Gates

NASDA Qualified Part #	Description	NASDA Detail Specification	Manufacturer	Device Class	Rad Hard Level	Notes
NASDA38510/65001DZH	Quad 2-Input NAND Gate	QTS-38510A/650	NEC	1	-	
NASDA38510/65002DZH	Triple 3-Input NAND Gate	QTS-38510A/650	NEC	1	-	
NASDA38510/65101DZH	Quad 2-Input NOR Gate	QTS-38510A/651	NEC	1	-	
NASDA38510/65102DZH	Triple 3-Input NOR Gate	QTS-38510A/651	NEC	1	-	

Parts

|

Packaging

|

Radiation

|

Publications

|

Calendar

|

Experts

Admin Login

|

Request Account

|

Feedback

|

Site Map

|

Help

|

Search

NEPP Program Manager:

Chuck Barnes, Jet Propulsion Laboratory

Responsible NASA Official:

Michael Sampson, NEPAG Manager

Website Comments:

Web Development Team

Last Modified:

August 8, 2001

AETD IT Security Banner

NASA Privacy Statement

Home

|

NASA Parts Selection List (NPSL)

|

Monolithic Microcircuits

|

NASDA Parts and Standards Program

|

Monolithic Microcircuits

| High Speed CMOS) HCMOS) Multiplexer/Demux (Decoders)

About NPSL

Prohibited Materials

Parts Selection Table of Contents

Capacitors

Circuit Protection Devices

Fuses

Connectors

Filters

Inductors

Microcircuits

NEW!

Monolithics

Hybrids

Resistors

Semiconductors

(Summary)

Diodes

Transistors

Thermistors

Wire and Cable

NASA Parts Selection List (NPSL)

National Space Development Agency of Japan (NASDA)

Manufacturer Details:

Active Supplier Assessment Program (ASAP) Core Suppliers List (CSL) Part II

General Information:

NASDA Parts and Standards Program

Last Update:

May 1999

High Speed CMOS (HCMOS)

Multiplexers/Demux (Decoders)

NASDA Qualified Part #	Description	NASDA Detail Specification	Manufacturer	Device Class	Rad Hard Level	Notes
NASDA38510/65803FZH	Dual 2-Bit, 2 to 4 Line Decoder	QTS-38510A/658	NEC	1	-	
NASDA38510/66207FZH	Quad 2 to 1 Line Data Selector/Multiplexer	QTS-38510A/662	NEC	1	-	
NASDA38510/91901FZH	8-Channel Analog Multiplexer	QTS-38510A/919	NEC	1	-	

Parts

|

Packaging

|

Radiation

|

Publications

|

Calendar

|

Experts

Admin Login

|

Request Account

|

Feedback

|

Site Map

|

Help

|

Search

NEPP Program Manager:

Chuck Barnes, Jet Propulsion Laboratory

Responsible NASA Official:

Michael Sampson, NEPAG Manager

Website Comments:

Web Development Team

Last Modified:

August 8, 2001

AETD IT Security Banner

NASA Privacy Statement

Home

|

NASA Parts Selection List (NPSL)

|

Monolithic Microcircuits

|

NASDA Parts and Standards Program

|

Monolithic Microcircuits

| High Speed CMOS (HCMOS) Shift Registers

About NPSL

Prohibited Materials

Parts Selection Table of Contents

Capacitors

Circuit Protection Devices

Fuses

Connectors

Filters

Inductors

Microcircuits

NEW!

Monolithics

Hybrids

Resistors

Semiconductors

(Summary)

Diodes

Transistors

Thermistors

Wire and Cable

NASA Parts Selection List (NPSL)

National Space Development Agency of Japan (NASDA)

High Speed CMOS (HCMOS)

Shift Registers

NASDA Qualified Part #	Description	NASDA Detail Specification	Manufacturer	Device Class	Rad Hard Level	Notes
NASDA38510/66505FZH	4-Bit Shift Register	QTS-38510A/665	NEC	1	-	

Parts
|
Packaging
|
Radiation
|
Publications
|
Calendar
|
Experts
Admin Login
|
Request Account
|
Feedback
|
Site Map
|
Help
|
Search
NEPP Program Manager:
Chuck Barnes, Jet Propulsion Laboratory
Responsible NASA Official:
Michael Sampson, NEPAG Manager
Website Comments:
Web Development Team
Last Modified:

August 8, 2001
AETD IT Security Banner
NASA Privacy Statement

Home
|

About NPSL
Prohibited Materials
Parts Selection Table of Contents
Capacitors
Circuit Protection Devices
Fuses
Connectors
Filters
Inductors
Microcircuits
NEW!
Monolithics
Hybrids
Resistors
Semiconductors
(Summary)
Diodes
Transistors
Thermistors
Wire and Cable

NASA Parts Selection List (NPSL)

NOTE: Unless specifically stated within the parts selection tables of the NPSL, listing of a device technology herein does NOT imply/guarantee Radiation Hardness Assurance (RHA). Applications concerned with a device's ability to tolerate exposure to various forms of space radiation (e.g., total ionizing dose, single event effects, etc.) should be reviewed and have the device assessed by the Program's radiation assurance experts. The following resources may also be consulted for initial guidance:

NASA Goddard Radiation Effects and Analysis

Jet Propulsion Laboratory Radiation Effects

National Space Development Agency of Japan (NASDA)

MICROCIRCUITS

(Monolithic)

HIGH SPEED CMOS (HCMOS), DIGITAL

The following NASDA QTS-38510 Microcircuit Technologies/Part Types are available for selection:

TYPE	TECHNOLOGY HCMOS

Buffers/Drivers	X
Counters	X
Flip-Flops	X
Gates	X
Multiplexers/Demux (Decoders)	X
Shift Registers	X

Parts

|

Packaging

|

Radiation

|

Publications

|

Calendar

|

Experts

Admin Login

|

Request Account

|

Feedback

|

Site Map

|

Help

|

Search

NEPP Program Manager:

Chuck Barnes, Jet Propulsion Laboratory

Responsible NASA Official:

Michael Sampson, NEPAG Manager

Website Comments:

Web Development Team

Last Modified:

August 8, 2001

AETD IT Security Banner

NASA Privacy Statement

About NPSL
Prohibited Materials
Parts Selection Table of Contents
Capacitors
Circuit Protection Devices
Fuses
Connectors
Filters
Inductors
Microcircuits
NEW!
Monolithics
Hybrids
Resistors
Semiconductors
(Summary)
Diodes
Transistors
Thermistors
Wire and Cable

NASA Parts Selection List (NPSL)

National Space Development Agency of Japan (NASDA)

Monolithic Microcircuit Manufacturer Listing

Additional information regarding parts technologies offered by these NASDA Qualified manufacturers listed in the

ASAP Core Suppliers List Part II

Listed herein is information regarding the NASDA qualified microcircuit parts supplier including contact name and telephone number. Information contained herein is subject to change by the manufacturer at any time.

NEC

Semiconductor Division

1753 Shimonumabe

Nakahara-Ku, Kawasaki-City
Kanagawa Pref., Japan
Ph: 81-3-3435-9556/HIREC
Fax: 81-3-3435-9559

NEPP Program Manager:
Chuck Barnes, Jet Propulsion Laboratory
Responsible NASA Official:
Michael Sampson, NEPAG Manager
Website Comments:
Web Development Team
Last Modified:

August 8, 2001

AETD IT Security Banner
NASA Privacy Statement

|

Monolithic Microcircuits

| NASDA Parts and Standards Program

About NPSL

Prohibited Materials

Parts Selection Table of Contents

Capacitors

Circuit Protection Devices

Fuses

Connectors

Filters

Inductors

Microcircuits

NEW!

Monolithics

Hybrids

Resistors

Semiconductors

(Summary)

Diodes

Transistors

Thermistors

Wire and Cable

NASA Parts Selection List (NPSL)

National Space Development Agency of Japan (NASDA)

Parts and Standards Program

Monolithic Microcircuits

Diodes

Transistors

General Information

NASDA EEE (Electrical, Electronic and Electromechanical) Parts Program Standard establishes selection criteria, standardization procedure and control of EEE parts. The NASDA qualified parts are commonly used in the Japanese space programs and systems that are developed by NASDA. NASDA point-of-contact and agency location are provided below:

Mr. Matsuda Sumio, Senior Engineer, Electronic and Information Technology Department,

Research and Development,

NASDA

1-1, Sengen 2chome, Tsukuba-city

Ibaraki 305-8505, Japan

Phone: 81-298-52-2295

Fax: 81-298-50-2750

E-mail:

Matsuda.Sumio@nasda.go.jp

NASDA microcircuit and semiconductor parts general qualification, quality conformance inspection (QCI) and screening requirements are based on the NASDA-QTS-38510A and NASDA-QTS-19500A specifications, respectively. NASDA Reliability Assurance Department reviews manufacturer's materials and processes documentation, applicable test-specification, test data, and evaluation report.

NASDA has contracted HIREC for the data review and continuous qualification activities to support maintenance of NASDA Qualified Products List (QPL) and Preferred Parts List (PPL). HIREC is responsible for reviewing test data and conducting periodic surveys of manufacturer's wafer fabrication, assembly and test facilities. HIREC also performs procurement and distribution of parts listed in the NASDA QPL. NASDA has the final authority in reviewing the test qualification data and manufacturer's audit/survey results for approval and listing in the NASDA QPL. The HIREC point-of-contact and agency location are provided below:

Mr. Chiyuki Komori, Director, Contract Department

Mr. Yasuo Kikuchi, Sales Manager, Contract Department

High-Reliability Components Corporation (HIREC)

Shuwa No. 3 Shiba-park Bldg.

2-10-12 Shiba-daimon, Minato-Ku, Tokyo 105-0012, Japan

Phone: 81-3-3435-9556

Fax: 81-3-3435-9559

E-mail: komori@hirec.co.jp

The parts manufactured by various Japanese companies that are listed in the NASDA QPL and NASA Parts Selection List (NPSL), are fabricated, assembled and tested in Japan. EEE parts for NASDA's space systems applications are based on two levels of reliability and quality assurance levels: Class I and Class II. Class I parts are applied to systems, subsystems or equipment, which the NASDA project office has determined to be critical. For applications not requiring Class I parts, Class II parts are used. The detailed information about NASDA manufacturers that are listed in NPSL is supplied in

Core Suppliers List (CSL) Part II

.

NOTE: Unless specifically stated within the parts selection tables of the NPSL, listing of a device technology herein does NOT imply/guarantee Radiation Hardness Assurance (RHA). Applications concerned with a device's ability to tolerate exposure to various forms of space radiation (e.g., total ionizing dose, single event effects, etc.) should be reviewed and have the device assessed by the Program's radiation assurance experts. The following resources may also be consulted for initial guidance:

NASA Goddard Radiation Effects and Analysis

Jet Propulsion Laboratory Radiation Effects

Request Account

|

Feedback

|

Site Map

|

Help

|

Search

NEPP Program Manager:

Chuck Barnes, Jet Propulsion Laboratory

Responsible NASA Official:

Michael Sampson, NEPAG Manager

Website Comments:

Web Development Team

Last Modified:

August 8, 2001

AETD IT Security Banner

NASA Privacy Statement

Active Electronic Parts

Active Parts Core Suppliers Listing (CSL)

Japanese Space Agency NASDA

European Space Agency ESA (Under Construction)

ASAP Vendor Information Matrix (VIM)

Hybrid Supplier Assessment Checklist

Adobe file format

MS Word format

Passive Electronic Parts

Passive Parts Core Suppliers Listing (CSL)

Technical Documents Archive

NASA Parts Selection List (NPSL)

Passive Parts Core Suppliers List (CSL) Part 1

The Passive part Supplier Assessment Program (PSAP) Core Suppliers List (CSL) Part I is now available on the World Wide Web. Click

here

to obtain the initial release issued in April 1996.

Preface

The Passive part Supplier Assessment Program (PSAP) Core Suppliers List (CSL) contains manufacturers that are considered by NASA Goddard Space Flight Center (GSFC) to be proven suppliers of passive electronic components for space flight applications. In reference to this CSL, passive electronic parts include the following part types:

Corresponding

MIL-STD-975

Section

Federal Supply Class

(FSC)

Description

Adobe Systems Incorporated

Note: At the time this initial Core Suppliers List was published, only the part types highlighted above were reviewed to identify core suppliers. Future editions of the Core Suppliers List will include the remaining part types.

The CSL is intended to help NASA project managers, parts reliability engineers and designers in the prevention and avoidance of EEE part reliability and mission schedule related problems. Such problems can occur when parts are procured from unproven suppliers, or suppliers who may have shown recent trends indicative of unsatisfactory performance.

For convenience, the PSAP CSL Part I is divided into sections based on the Federal Supply Classes (FSC) listed above (resistors, capacitors, etc.). The first page of each section provides a quick reference index which identifies the specific part types produced by each manufacturer for that FSC. This index is helpful when trying to identify the available sources for a particular part type. The subsequent pages of each section provide detailed information about the part types, values, tolerances, case styles, etc. available from each manufacturer. These pages are organized in alphabetical order by manufacturer name.

The information provided in this report was obtained from the NASA Standard Electrical, Electronic and Electromechanical parts list (MIL-STD-975), the NASA GSFC Preferred Parts List (PPL-21) and Qualified Products Lists for the various part specifications listed.

Please note that the manufacturer's listing and the accompanying information are considered to be accurate at the time of publication. However, the military specification system and the marketplace for passive electronic parts are continuously evolving. As a result, the listings may change without

notice; revisions or amendments will be issued as necessary.

Please Send Comments, Questions or Corrections to:

NASA Goddard Space Flight Center

Greenbelt, MD 20771

Attn:

Jay Brusse

August 24, 2000

Parts

|

Packaging

|

Radiation

|

Publications

|

Calendar

|

Experts

Admin Login

|

Request Account

|

Feedback

|

Site Map

|

Help

|

Search

NEPP Program Manager:

Chuck Barnes, Jet Propulsion Laboratory

Responsible NASA Official:

Michael Sampson, NEPAG Manager

Website Comments:

Web Development Team

Last Modified:

August 14, 2001

AETD IT Security Banner

NASA Privacy Statement

|

Search

NEPP Program Manager:

Chuck Barnes, Jet Propulsion Laboratory

Responsible NASA Official:

Michael Sampson, NEPAG Manager

Website Comments:

Web Development Team

Last Modified:

August 14, 2001

AETD IT Security Banner

NASA Privacy Statement

Home

|

NASA Parts Selection List (NPSL)

|

NEPAT

Active Electronic Parts

Active Parts Core Suppliers Listing (CSL)

Japanese Space Agency NASDA

European Space Agency ESA (Under Construction)

ASAP Vendor Information Matrix (VIM)

Hybrid Supplier Assessment Checklist

Adobe file format

MS Word format

Passive Electronic Parts

Passive Parts Core Suppliers Listing (CSL)

Technical Documents Archive

NASA Parts Selection List (NPSL)

NASA EEE Parts Assurance Task (NEPAT)

Formerly known as Active Supplier Assessment Program (ASAP)/ Passive Supplier Assessment Program (PSAP)

NEPAT provides the NASA projects and space parts community with timely information pertaining to active and passive electronic parts reliability and availability issues. NEPAT also participates in and partners with other government and industry groups to ensure the component needs of NASA spaceflight programs are addressed in new and revised military and industry specifications.

This activity is critical to helping NASA flight projects prevent and/or correct electronic part reliability and availability problems. Information is disseminated through reports, NASA Parts Advisories, verbally through a help desk and via E-mail Information Bulletins and Vendor Survey Summaries. NEPAT is also the primary technical arm for the component sections of the

NASA Parts Selection List

.

ATC Capacitor RF Evaluation

Device #7 Raw Data [Posted 2/14/01]

Test 1

[Adobe PDF]

Test 8

[Adobe PDF]

Thermal Test

[Adobe PDF]

Device #9 - Raw Data

Graph

[MS PowerPoint]

Test 1

[Adobe PDF]

Test 2

[Adobe PDF]

Test 3

[Adobe PDF]

Test 10

[Adobe PDF]

Evaluation of MultiLayer Ceramic Capacitors for Low Voltage Type Failures - October 20, 2000

PDF

or

Word

Pete Jones, NASA Goddard

Plastic Encapsulated Microcircuit (PEM) Derating, Storage, and Qualification Report

- August 2000

Ashok Sharma, NASA Goddard

(301) 286-6165

Please Send Comments, Questions or Corrections to:

Ashok Sharma

Code 562

NASA Goddard Space Flight Center

Greenbelt, MD 20771

(301) 286-6165

(301) 286-1695 (fax)

Parts

|

Packaging

|

Radiation

|

Publications

|
Calendar
|
Experts
Admin Login
|
Request Account
|
Feedback
|
Site Map
|
Help
|
Search
NEPP Program Manager:
Chuck Barnes, Jet Propulsion Laboratory
Responsible NASA Official:
Michael Sampson, NEPAG Manager
Website Comments:
Web Development Team
Last Modified:

August 14, 2001
AETD IT Security Banner
NASA Privacy Statement

Active Electronic Parts
Active Parts Core Suppliers Listing (CSL)
Japanese Space Agency NASDA
European Space Agency ESA (Under Construction)
ASAP Vendor Information Matrix (VIM)
Hybrid Supplier Assessment Checklist
Adobe file format
MS Word format
Passive Electronic Parts
Passive Parts Core Suppliers Listing (CSL)
Technical Documents Archive
NASA Parts Selection List (NPSL)

Passive Parts Core Suppliers List (CSL) Part 1
The Passive part Supplier Assessment Program (PSAP) Core Suppliers List (CSL) Part I is now available on the World Wide Web. Click

here

to obtain the initial release issued in April 1996.

Preface

The Passive part Supplier Assessment Program (PSAP) Core Suppliers List (CSL) contains manufacturers that are considered by NASA Goddard Space Flight Center (GSFC) to be proven suppliers of passive electronic components for space flight applications. In reference to this CSL, passive electronic parts include the following part types:

Corresponding

MIL-STD-975

Section

Federal Supply Class

(FSC)

Description

1	5910	Capacitors
2	5935	Connectors
3	5955	Crystals and Crystal Oscillators
5	5915	Filters, EMI
6	5950	Inductors
8	5920	Protective Devices (Fuses)
9	5945	Relays, Electromechanical
10	5905	Resistors
11	5905	Thermistors
12	5950	Transformers
14	6145	Wire and Cable
15	60GP	Photonics

Note: At the time this initial Core Suppliers List was published, only the part types highlighted above were reviewed to identify core suppliers. Future editions of the Core Suppliers List will include the remaining part types.

The CSL is intended to help NASA project managers, parts reliability engineers and designers in the prevention and avoidance of EEE part reliability and mission schedule related problems. Such problems can occur when parts are procured from unproven suppliers, or suppliers who may have shown recent trends indicative of unsatisfactory performance.

For convenience, the PSAP CSL Part I is divided into sections based on the Federal Supply Classes (FSC) listed above (resistors, capacitors, etc.). The first page of each section provides a quick reference index which identifies the specific part types produced by each manufacturer for that FSC. This index is helpful when trying to identify the available sources for a particular part type. The subsequent pages of each section provide detailed information about the part types, values, tolerances, case styles, etc. available from each manufacturer. These pages are organized in alphabetical order by manufacturer name.

The information provided in this report was obtained from the NASA Standard Electrical, Electronic and Electromechanical parts list (MIL-STD-975), the NASA GSFC Preferred Parts List (PPL-21) and Qualified Products Lists for the various part specifications listed.

Please note that the manufacturer's listing and the accompanying information are considered to be accurate at the time of publication. However, the military specification system and the marketplace for passive electronic parts are continuously evolving. As a result, the listings may change without notice; revisions or amendments will be issued as necessary.

Please Send Comments, Questions or Corrections to:

NASA Goddard Space Flight Center

Greenbelt, MD 20771

Attn:

Jay Brusse

August 24, 2000

Parts

|

Packaging

|

Radiation

|

Publications

|

Calendar

|

Experts

Admin Login

|

Request Account

|

Feedback

|

Site Map

|

Help

|

Search

NEPP Program Manager:

Chuck Barnes, Jet Propulsion Laboratory

Responsible NASA Official:

Michael Sampson, NEPAG Manager

Website Comments:

Web Development Team

Last Modified:

August 14, 2001

AETD IT Security Banner

NASA Privacy Statement

Passive Parts Core Suppliers List (CSL) Part 1

| Passive Parts Core Suppliers List (CSL) Part 2

Active Electronic Parts

Active Parts Core Suppliers Listing (CSL)

Japanese Space Agency NASDA

European Space Agency ESA (Under Construction)

ASAP Vendor Information Matrix (VIM)

Hybrid Supplier Assessment Checklist

Adobe file format

MS Word format

Passive Electronic Parts

Passive Parts Core Suppliers Listing (CSL)

Technical Documents Archive

NASA Parts Selection List (NPSL)

Passive Parts Core Suppliers List (CSL) Part 2

A Portable Document Format (PDF) reader will be needed to view each section of the PSAP CSL. A PDF reader, along with installation instructions, can be obtained free from

Adobe Systems Incorporated.

Table of Contents

Preface/Criteria for Listing

Section 1: Capacitors (FSC: 5910)

Section 2: Connectors (FSC: 5935)

Updated May 1997

Section 3: Crystals and Crystal Oscillators (FSC: 5955)

(Reserved for Future Development)

Section 4: Diodes (FSC: 5961)

(Refer to Active Supplier Assessment Program CSL)

Section 5: Filters, EMI (FSC: 5915)

Section 6: Inductors (FSC: 5950)

(Reserved for Future Development)

Section 7: Microcircuits and Hybrids (FSC: 5962)

(Refer to Active Supplier Assessment Program CSL)

Section 8: Protective Devices (FSC: 5920)

Section 9: Relays (FSC: 5945)

Section 10: Resistors (FSC: 5905)

Section 11: Thermistors (FSC: 5905)

Section 12: Transformers (FSC: 5950)

(Reserved for Future Development)

Section 13: Transistors (FSC: 5961)

(Refer to Active Supplier Assessment Program CSL)

Section 14: Wire and Cable (FSC: 6145)

(Reserved for Future Development)

Section 15: Photonics (FSC: 60GP)

(Reserved for Future Development)

August 24, 2000

Parts
|
Packaging
|
Radiation
|
Publications
|
Calendar
|
Experts
Admin Login
|
Request Account
|
Feedback
|
Site Map
|
Help
|
Search
NEPP Program Manager:
Chuck Barnes, Jet Propulsion Laboratory
Responsible NASA Official:
Michael Sampson, NEPAG Manager
Website Comments:
Web Development Team
Last Modified:

August 14, 2001
AETD IT Security Banner
NASA Privacy Statement

Active Electronic Parts
Active Parts Core Suppliers Listing (CSL)
Japanese Space Agency NASDA
European Space Agency ESA (Under Construction)
ASAP Vendor Information Matrix (VIM)
Hybrid Supplier Assessment Checklist
Adobe file format

MS Word format

Passive Electronic Parts

Passive Parts Core Suppliers Listing (CSL)

Technical Documents Archive

NASA Parts Selection List (NPSL)

PSAP Technical Documents Archive

A Portable Document Format (PDF) reader will be needed to view the following reports. A PDF reader, with installation instructions, may be obtained free from

Adobe Systems Incorporated.

Date of Report	Report Title
04/08/98	EIA G-11 (Passive Parts Committee) Meeting Notes February 1998
04/06/98	Space Parts Working Group (SPWG) Trip Report March 1998 GSFC Presentation Slides for SPWG (March 1998)
02/04/98	Electronic Components for the Commercialization of Space Systems Workshop
06/20/97	EIA G-11 (Passive Parts Committee) Meeting Notes June 1997
05/xx/97	Guide of Space Grade Requirements for Electrical Connectors
03/17/97	Capacitor Military Specification Coordination Meeting (DSCC)
02/19/97	Fiber Optic Cable Assemblies for Space Flight Applications: Issues and Remedies
02/04/97	Draft Specification for Optical Cable, Single, Multimode Fiber, Hermetic, Tight Buffer, Single Jacket with Spacer, for Space Flight Part Number XXXXX-5
10/15/96	Resistor Military Specification Coordination Meeting (DSCC)
08/14/96	Radiation Evaluation of Wet Tantalum Electrolytic Capacitors (Type CLR79)
07/xx/95	Evaluation Report for the Amphenol-Bendix 453 Miniature Circular Connector with Mil-T-29504 Optical Termini in a Vibration Environment
03/11/94	Memo to XTE Project: Response of a FM08 Style Fuse to a Pulse of Current

Parts

|

Packaging

|

Radiation

|

Publications

|

Calendar

|

Experts

Admin Login

|

Request Account

|

Feedback

|

Site Map

|

Help

|

Search

NEPP Program Manager:

Chuck Barnes, Jet Propulsion Laboratory

Responsible NASA Official:

Michael Sampson, NEPAG Manager

Website Comments:

Web Development Team

Last Modified:

August 14, 2001

AETD IT Security Banner

NASA Privacy Statement

Active Parts Core Suppliers List (CSL)

The Active Parts Core Suppliers Listing (CSL) is a listing of manufacturers who are considered preferred suppliers of monolithic microcircuits, hybrid microcircuits, transistors or diodes by NASA. The CSL consists of two parts:

Core Suppliers List Part I

Introduction Section I - Microcircuits Section II - Hybrids Section III - Diodes Section IV - Transistors

Core Suppliers List Part II

Japanese Space Agency (NASDA) Listings European Space Agency (ESA) Listings

NOTE: A Portable Document Format (PDF) reader will be needed to view the CSL files on this page. A PDF reader, along with installation instructions, can be obtained free from Adobe Systems Incorporated.

Part I follows, and includes only those suppliers who satisfy the following criteria:

Are listed in QML-38535 (Qualified Manufacturers List of Advanced Microcircuits Qualified Under Military Specification MIL-PRF-38535?), QML-38534 (?Qualified Manufacturers List of Custom Hybrid Microcircuits Qualified under Military Specification List of Custom Hybrid Microcircuits Qualified under Military Specification MIL-H-38534?) or QPL-19500 (?Qualified Products List of Products Qualified under Military Specification MIL-S-19500) Offer one or more products which are currently listed in either MIL-STD-975 or the GSFC PPL Offer QML/QPL products to quality assurance levels which are considered suitable for spaceflight use Have established a history of providing high reliability parts to NASA.

The CSL, Part II, includes active part suppliers, who are not necessarily QML/QPL-certified, but who satisfy the following criteria:

Manufacturers parts on DESC certified and qualified lines Have compiled a satisfactory history of supplying high reliability parts which are currently procured through contractor (or OEM) SCDs Manufacture parts to NASA specifications Are certified and qualified by ESA/NASDA to provide parts to ESA/SCC or NASDA specifications)

The CSL is intended to assist NASA project management, parts/reliability engineers and designers in avoiding EEE part reliability/mission schedule problems which can result when parts are procured from unproven suppliers or suppliers who show recent trends indicative of unsatisfactory performance.

For each manufacturer listed in the CSL, Part I, herein, there is accompanying information related to the processing technologies and product lines for which the manufacturer is considered a core supplier and the name/phone number of a company representative to whom questions may be directed.

The information described in this report was obtained from NASA GSFC Preferred Parts List (PPL-21), NASA Standard Electrical, Electronic and Electromechanical parts list (MIL-STD-975), Qualified Manufacturers List for Monolithic Microcircuits (QML-38535), Qualified Manufacturers list for Custom Hybrid Microcircuits (QML- 38534), and Qualified Products List for Diodes and Transistors (QPL-19500).

For convenience, the listings have been grouped by part commodity. Introductory remarks for each section provide an explanation of the information contained therein. Please note that the manufacturer's listing and the accompanying information are considered accurate at the time of issue of this document. However, the semiconductor industry is one known for rapid change of technology and development including fabrication processes and assembly locations. As a result, the listings are subject to change without notice; revisions or amendments will be issued, as necessary.

For additional information regarding this Core Suppliers Listing, please contact:

Ashok Sharma NASA Goddard Space Flight Center Greenbelt, Maryland 20771 Attn: Ashok Sharma (Active Parts Specialist Code 562) (301) 286-6165 (301) 286-1695 (fax)

Appendix A Derating Criteria

Under Construction.

Appendix B Additional Parts Information Links

Listed below are some useful Links to other data sites that can be used in obtaining additional part related information:

NASA Parts and Packaging Program (NPPP)

Site managed by the Jet Propulsion Laboratory (JPL) -- This Site Contains Electronic Parts Reliability Information Studies of Emerging Microelectronics Technologies Radiation Effects Information JPL's Electronic Parts Information Network System (EPINS)

Electronic Parts Information Management System (EPIMS) User ID/Password Controlled -- This Site Contains GIDEP Alerts GSFC Parts Analysis Web System (PAWS) NASA Parts Advisories NASA Project Parts Lists Nonstandard Part Approval Requests Manufacturer CAGE code/address look up

GSFC SEU Radiation Data Bank

JPL's Radiation Data Bank

GSFC Procurement Specifications

Appendix C Prohibited Materials Section

The following section of the NASA Parts Selection List (NPSL) has been developed to identify materials often used in the manufacture and assembly of EEE parts that shall be prohibited from use in high reliability NASA electronic systems and flight hardware. Users are strongly urged to familiarize themselves with these issues to minimize the risk of introducing potential problems. In addition to the issues noted in this section, each commodity section within the NPSL has application notes that are unique to the commodity. Therefore, users should also review the application notes contained in each commodity section.

1. Pure Tin Plating 2. Cadmium Plating 3. Zinc Plating

Pure Tin Plating Prohibition

Policy:

Pure tin plating is prohibited as a final finish on EEE parts and associated hardware

Reference:

NASA Advisory NA-044 October 23, 1998 NASA Advisory NA-044A December 17, 1998 NASA GSFC Tin Whisker Homepage

Rationale:

Pure tin finishes are susceptible to the spontaneous growth of electrically conductive single crystal structures known as tin whiskers. Over time these whiskers may grow to be several millimeters (mm) long. Tin whiskers are capable of causing electrical failures ranging from parametric deviations to sustained plasma arcing (in vacuum) that can result in catastrophic short circuits.

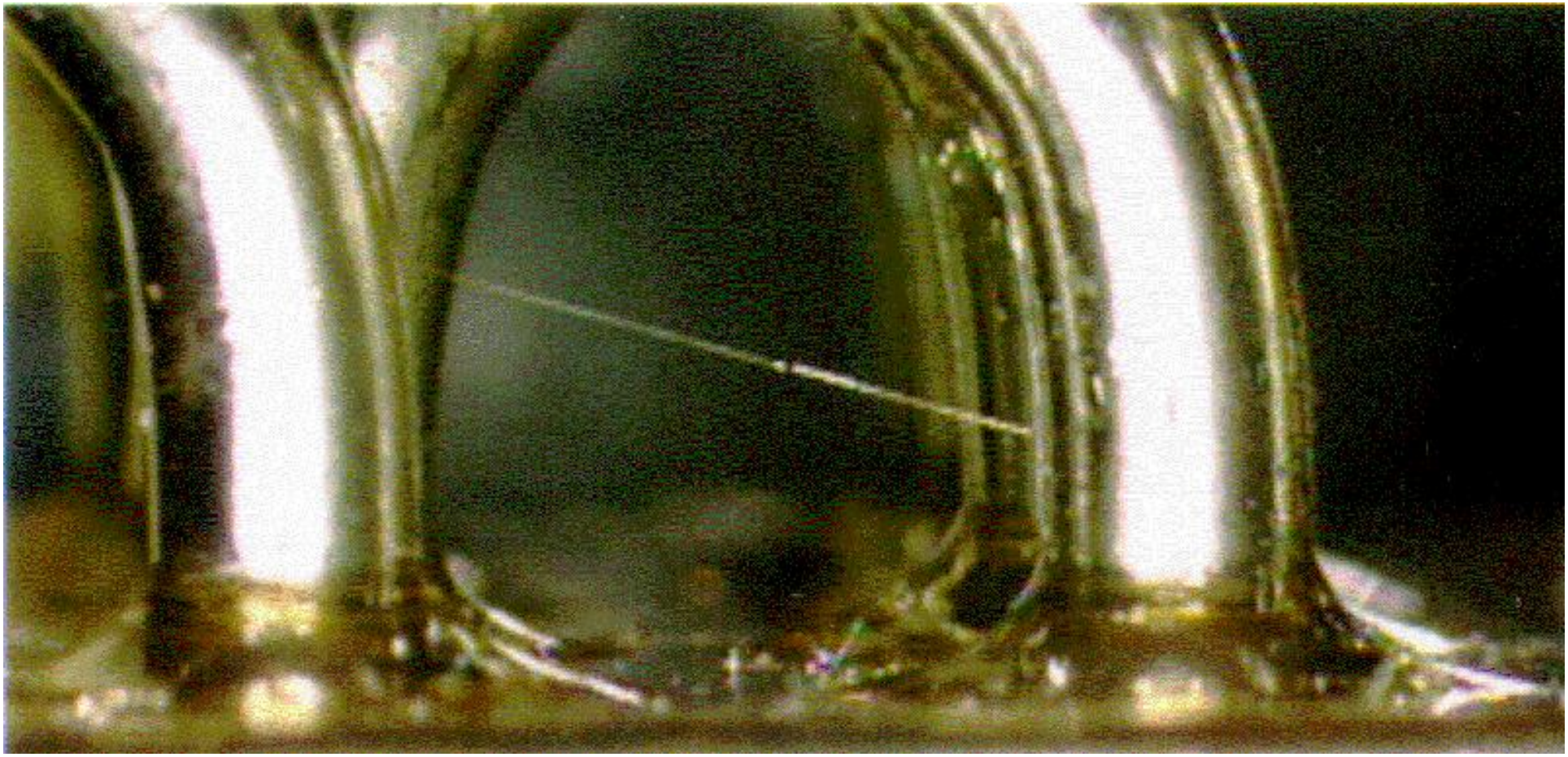

An Example of a Tin Whisker

Several instances have been reported where tin whiskers have caused system failures in both earth and space-based applications including at least 3 reports where a tin whisker induced short circuit resulted in complete failure of the commercial satellite.

The general risks fall into four categories:

Stable short circuits in low voltage, high impedance circuits.In such circuits there may be insufficient current available to fuse the whisker open and a stable short circuit results. Depending on the diameter and length of the whisker, it can take more than 50 milliamps (mA) to fuse one open. More typical is ~10mA Transient short circuits. At atmospheric pressure, if the available current exceeds the fusing current of the whisker, the circuit may only experience a transient glitch as the whisker fuses open. Plasma arcing in vacuum.In vacuum a much more destructive phenomenon can occur. If currents of above a few amps are available, the whisker will fuse open but the vaporized tin may initiate a plasma that can conduct over 200 amps. An adequate supply of tin from the plated surface is necessary to sustain the arc. This phenomenon is reported to have occurred on several commercial satellites resulting in blown fuses that rendered the spacecraft non-operational. Debris/Contamination.Whiskers or parts of whiskers may break loose and bridge isolated conductors or interfere with optical surfaces

Recommendations:

At this time, the only sure way of avoiding tin whiskers is not to use parts plated with pure tin. Despite procurement specification requirements that prohibit pure tin, errors sometimes occur resulting in pure tin plated components being delivered. Therefore, users are advised to independently test and analyze the plating composition of the products received as a verification that pure tin plating is not in use. Simple visual inspection is generally not sufficient because pure tin plating may appear similar to other plated finishes such as tin/lead or nickel.

Utilization of procurement specifications that have clear restrictions against the use of pure tin plating is still recommended. Most, but not all, of the commonly used military specifications currently have prohibitions against pure tin plating. Studies have shown that alloying tin with a second metal reduces the propensity for whisker growth. Alloys of tin and lead are acceptable where the alloy contains a minimum of 3% lead by weight.

In the event pure tin plated parts cannot be avoided, there are some additional processing techniques that may be used to reduce but not eliminate the risks associated with tin whiskers. The effectiveness of these approaches is variable and most require further evaluation to determine their suitability for long duration missions. Examples of these approaches include:

Solder dipping pure tin plated terminations and leads using a leaded solder. The effectiveness of this approach at covering all pure tin plated surfaces can be variable. Application of conformal coat material to pure tin plated surfaces. Conformal coat appears to reduce the growth rate of tin whiskers, but whiskers are still capable of growing through some conformal coat materials such as polyurethanes. For some device types manufacturers may be willing to replate surfaces using finishes such as tin/lead or nickel which are substantially less prone to whisker formation.

Cadmium Plating Prohibition

Policy:

Cadmium plating is prohibited on EEE parts and associated hardware. In some applications use of Cadmium plating may be acceptable via a Project approved waiver process that includes review and approval by both Materials and Parts Engineering disciplines.

Reference:

MSFC-HDBK-527, Materials Selection List for Space Hardware Systems JSC 11123, Space Transportation System Payload Safety Guidelines Handbook

Rationale:

There are several reasons for prohibiting the use of Cadmium plating in space flight electronic systems.

Cadmium is known to sublimate in a hard vacuum environment (especially at temperatures above 75°C). The sublimation products, which are conductive, can redeposit resulting in short circuits. The sublimation products may also interfere with sensitive optics. Cadmium is a toxic material that should not be used in manned spaceflight applications Cadmium is subject to the spontaneous growth of Cadmium whiskers. The propensity of Cadmium to grow whiskers

appears to be lower than that of zinc and especially tin. Cadmium whiskers (like tin whiskers) grow spontaneously and are capable of causing electrical failures ranging from parametric deviations to sustained plasma arcing that can result in catastrophic short circuits. See prohibition against pure tin plating for additional insight regarding the risks of metal whiskers.

Recommendations:

Cadmium plating is commonly used on connectors, connector hardware and mechanical hardware such as fasteners. It provides excellent resistance to salt corrosion and is therefore offered in many military specifications predominantly for use in naval applications. However, most NASA applications are not concerned with salt corrosion and the risks associated with use of Cadmium plating noted above outweigh the benefits of its use in spaceflight applications. There are several alternatives to Cadmium plating that are suited for spaceflight use. For connectors, electroless nickel plating is preferred. Gold plating is preferred when the application requires additional shielding effectiveness or low residual magnetism. Passivated stainless steel is the preferred material for hardware items such as fasteners. Consult your materials or parts specialists for suggested alternatives to Cadmium plating.

Zinc Plating Prohibition

Policy:

Zinc plating is prohibited on EEE parts and associated hardware. In some applications use of Zinc plating may be acceptable via a Project approved waiver process that includes review and approval by both Materials and Parts Engineering disciplines.

Reference: NA

Rationale:

There are several reasons for prohibiting the use of Zinc plating in space flight electronic systems.

Zinc is known to sublimate in a vacuum environment (especially at elevated temperatures). The sublimation products are conductive and can result in short circuits. Zinc is subject to the spontaneous growth of Zinc whiskers. Zinc whiskers (like tin whiskers) grow spontaneously and are capable of causing electrical failures ranging from parametric deviations to sustained plasma arcing that can result in catastrophic short circuits. See prohibition against pure tin plating for additional insight regarding the risks of metal whiskers

Recommendations:

Zinc (galvanized) plating is occasionally used on mechanical hardware such as fasteners for its corrosion resistant properties. By using alternative plating materials most NASA applications can avoid the risks associated with the use of Zinc plating while still achieving suitable corrosion resistance. Consult your materials or parts specialists for suggested alternatives to Zinc plating.