Table of Contents

Introduction

1.0 Foreword

2.0 About this document

3.0 Using this document

4.0 General Requirements

Parts Selection

Capacitors

Circuit Protection Devices

Fuses

Connectors

Filters

Inductors

Microcircuits

Monolithics

Hybrids

Resistors

Semiconductors (Summary)

Diodes

Transistors

Thermistors

Wire and Cable

Appendices

A - Derating Guidelines

B - Additional Parts Information Links

C - Prohibited Materials

1.0 FOREWORD

The NASA EEE Parts Selection List (NPSL) has been developed as a "parts selection tool" specifically geared toward design and parts engineering organizations internal to NASA and to universities and original equipment manufacturers (OEMs) that do not have the resources for a dedicated quality and reliability infrastructure in parts engineering. The NPSL is a listing of electrical, electronic, and electromechanical (EEE) part types and advanced packaging technologies such as Multi-Chip Modules (MCM) which are produced under various government and/or industry quality systems.

Since NASA's Standard EEE Parts List, MIL-STD-975, was cancelled without replacement on May 3, 1998, the NPSL provides a viable alternative for parts selection. However, there are some key differences in the philosophy of these two documents which users must be aware of:

MIL-STD-975 NPSL

Defines "Standard" and "Non-Standard" Parts Leaves standardization up to the individual flight projects Defines a "Non-Standard Parts Approval Request" (NSPAR) policy Leaves it to the individual flight projects to approve parts for the intended application Intended to be invoked as a contract requirement Not intended to be invoked as a contract requirement Very stringent requirements for parts listings Designed to facilitate listing of newer, advanced technologies

OEMs that have an established parts engineering infrastructure may elect to use the NPSL to augment their own existing part selection lists. The NPSL may be chosen, in part or in its entirety, to be a subset of a Project Approved Parts List (PAPL) or equivalent. The decision to invoke the NPSL shall be made by the project based on the parts management and control requirements for that mission. The NPSL itself, should not be imposed as a contractual requirement, but the associated part listings may be established as approved selections by the project.

2.0 ABOUT THIS DOCUMENT

2.1 General:

The NPSL is a selection tool providing designers with a list of EEE parts intended to meet system design requirements and NASA Parts Program quality/reliability levels. It is not mandatory that the parts listed herein be the only selections used to design a system, but if a particular function is needed and a suitable part is listed, the NASA EEE Parts Assurance Group (NEPAG) recommends the listed part as the first order of precedence for selection. Selecting a part from the NPSL may provide cost savings/ avoidance for the project because:

The procurement specification already exists The manufacturer has had a NASA survey or government audit performed The parts are available under one or several NASA accepted quality assurance systems Part qualification has been successfully completed All or most of the parts engineering has already been performed

The parts listed are approved for use only if NASA flight project approval is given. The document lists parts according to established quality assurance levels and NASA Parts Program knowledge of the product and manufacturer such as qualification history, GIDEP and failure trends, and delivery performance. This combination allows NEPAG to make a technical assessment of the quality, availability, capability and reliability and to list parts at a corresponding quality level within this document.

2.2 World Wide Web Access to the NPSL

The NPSL has been developed and will be maintained as an on-line World Wide Web homepage accessible via http://nepp.nasa.gov/npsl. The primary objectives of using the WWW as the platform for maintaining the NPSL are to:

Provide broad and ready access by NASA affiliated organizations world wide Facilitate quick updates, modifications, and revisions Provide links to additional EEE part information

Users will have to access the NPSL on-line and be able to download the document if a printout is desired.

2.3 Configuration Management

Under Construction

2.4 Appendices:

Appendix A (when released) will contain guidelines for derating parts. In general, these guidelines are accepted by NEPAG for use on all projects. Flight projects may elect to further develop these guidelines into requirements. Appendix A may not contain derating criteria for all part types, but guidelines provided can be used as a baseline for project derating requirements.

Appendix B is a repository of useful WWW links to additional parts information databases which can be accessed to support parts selection and application issues.

3.0 USING THIS DOCUMENT

The NPSL has been structured into four primary sections to facilitate finding the information of interest:

Welcome and User Feedback Section (Banner Page) Use Policy Section Parts Listings by Commodity Type Sections Appendices

The Parts Listings by Commodity Type Sections contains the actual part selection listings. The part types which will be covered in the NPSL consist of advanced packaging technologies such as MCMs and the commodities defined as electrical, electronic, and electromechanical (EEE) parts. The commodity types are listed below according to the Federal Stock Classification (FSC) system.

Part Types FSC

Capacitors 5910 Circuit Breakers 5925 Connectors 5935 Crystals and Crystal Oscillators 5955 Fiber Optics 60GP Filters 5915 Fuses 5920 Inductors 5950 Microcircuits (Monolithic and Hybrid) 5962 Relays 5945 Resistors 5905 Semiconductors (Diode and Transistor) 5961 Thermistors 5905 Transformers 5950 Wire and Cable 6145

Within each commodity class the parts are listed in order by procurement specifications in existence as NASA, DoD, or other space agency (e.g. ESA or NASDA) specifications. The part listing for each specification begins with a detailed explanation of the part numbering system. These explanations and the part listings which follow help the user "build" the appropriate part number for the project application. General functional descriptions and generic part number cross-references are provided to assist the user in matching functionality. The part quality levels, radiation tolerance levels (if known), and the available manufacturer sources are also identified.

Although extensive efforts have been made to maintain the accuracy of the supplier information within the part listings, users are encouraged to visit the Defense Supply Center Columbus (DSCC), http://www.dscc.dla.mil/programs/qmlqpl/. DSCC is the Department of Defense agency responsible for certifying suppliers of military specification EEE parts. At this site, users can download the latest Qualified Products List (QPL) for the part type of interest.

4.0 GENERAL REQUIREMENTS

Selection of parts for inclusion in the device listings in this document is based on a review of technical data by the NASA EEE Parts Assurance Group (NEPAG) for quality and reliability trends. The major criteria used to evaluate candidate parts are:

o Quality system and assurance level the products are produced under

o Product performance

o Product workmanship assessments

o Destructive Physical Analysis results

o Failure histories

o Reliability trends

o GIDEP alert histories of the product and manufacturer

o Qualification and screening test results

o Product availability

o Manufacturer audit and survey results

o Manufacturer responsiveness to corrective actions

o Manufacturer delivery histories

Participation by the manufacturers in a quality program such as QPL, QML, and ISO 9000. will not automatically qualify their products for listing in the NPSL. Listings will be based on results from assessments of all the major criteria listed above. EEE parts-related activities throughout NASA provide recommendations for listing parts in this document.

NOTE: Unless specifically stated within the parts selection tables of the NPSL, listing of a device technology herein does NOT imply/guarantee Radiation Hardness Assurance (RHA). Applications concerned with a device's ability to tolerate exposure to various forms of space radiation (e.g., total ionizing dose, single event effects, etc.) should be reviewed and have the device assessed by the Program's radiation assurance experts. The following resources may also be consulted for initial guidance:

NASA Goddard Radiation Effects and Analysis Jet Propulsion Laboratory Radiation Effects

4.1 NASA Parts Levels

The NPSL lists products based on three quality levels defined by NEPAG: Level 1, Level 2, and Level 3. The definitions for each Level and the criteria used to list a part in a particular Level are not part approvals nor is this document a project approved parts list. The NPSL will not provide information on whether or not a part meets individual project flight requirements. Instead, it provides a list of products and associated manufacturers that meet recognized quality assurance baselines, qualification test regimens, and screening requirements necessary for space flight acceptance based on levels of risk. The part selected must be assessed independently by the project or the NASA center or OEM's parts organization to determine if it meets the requirements for the project. The parts engineering organizations at the NASA centers will assist users in making this determination. The Levels herein are not directly related to mission classification, cost, or schedule and users should make the appropriate Level tradeoffs when considering which parts to choose from the list.

4.1.1 Level 1:

Level 1 is the highest product assurance class assigned to parts listed in this document. Level 1 parts are those produced under assurance classes recognized by NASA as providing the highest possible level of quality and reliability (e.g. QML Class V K, JANS for discrete semiconductors, QPL Class S, Failure Rate Level (FRL) S), from NASA approved manufacturing sources, and meeting NASA space level parts and packaging program assessment criteria. The technical assessment results for Level 1 products will show that no known trends exist which have a negative impact on the quality, reliability, or performance for space flight applications. The Level 1 criteria is summarized as follows:

o The supplier's facility(s) must be certified under a recognized quality assurance system (e.g. QML, QPL, ISO 9000) and produce products to the space industry recognized highest assurance classes (e.g. QML V, JANS for discrete semiconductors, QPL Class S, FRL S, GSFC S311 specification) or equivalent. There are exceptions to these levels where this preferred part reliability level is unavailable; these exceptions are shown in the individual part listings.

o A Defense Supply Center Columbus (DSCC) audit or a NASA program manufacturer survey to the highest assurance classes must have been successfully completed within the past 2 years.

o A part procurement specification, containing the highest assurance class requirements, must exist. Parts must have been procured previously by a NASA project using this specification.

o Historical DPA and other parts analysis data on the manufacturer's products must be available and not reveal poor workmanship trends or rejection trends.

o Failure analyses history for the manufacturers products should not reveal problem trends attributed to part quality and reliability.

o No recent unresolved GIDEP Alerts (past 3 years) exist that have a major impact on the Level 1 products quality or reliability. No GIDEP Alert or NASA Parts Advisory trends exist on the manufacturer or product.

o Available data on manufacturer performance must show no trend for late delivery of products to NASA projects.

o Qualification to the requirements of the procurement specification must have been successfully completed. No qualification issues exist and no problem trends from previous qualifications exist.

4.1.2 Level 2:

Level 2 is the second highest product assurance class assigned to parts listed in this document. Level 2 parts are those produced under assurance classes recognized by NASA to have a high level of quality and reliability (e.g. QML Q H, QPL Class B, JANTXV for discrete semiconductors, FRL R or P), from NASA approved manufacturing sources, and meeting NASA space level parts and packaging program assessment criteria. The Level 2 criteria is summarized as follows:

o The supplier's facility(s) must be certified under a recognized quality assurance system (e.g. QML, QPL, ISO 9000) and produce products to space industry recognized high assurance classes (e.g. QML Q, QPL B, JANTXV for discrete semiconductors, FRL R or P, GSFC S311 specification) or equivalent. Any exceptions to these levels where the preferred part reliability level is unavailable, are shown in the individual part listings.

o A Defense Supply Center Columbus (DSCC) audit or a NASA program manufacturer survey must have been successfully completed within the past 2 years.

o A part procurement specification, containing the high assurance class requirements, must exist. Parts must have been procured previously by a NASA project using this specification.

o DPA and other parts analysis data on the manufacturer's products must be available and must not reveal any significant problems due to poor workmanship and must show minimal reject rates.

o Failure analyses history for the manufacturers products should not reveal problem trends attributed to part quality and reliability.

o No unresolved GIDEP Alert trends exist that have a major impact on the Level 2 products quality or reliability. No GIDEP Alert or NASA Parts Advisory trends exist on the manufacturer or product.

o Available data on manufacturer performance must show consistent on-time delivery of products to NASA projects.

o Qualification to the requirements of the procurement specification must have been successfully completed. Qualification issues and problems from previous qualifications must have been resolved (not by waiver).

4.1.3 Level 3:

Level 3 is the minimum product assurance class assigned to parts listed in this document. Level 3 contains many advanced electronic functions (from a space flight applications standpoint) and has been created to provide a technology insertion path into NASA flight projects. Parts listed are those produced by reputable manufacturers under a recognized quality assurance system (QML, QPL, ISO 9000) or their equivalent. Typically, only a limited amount of information is available to NEPAG for these parts and NASA has minimal visibility into the manufacturing and testing of Level 3 product. The parts are usually available commercially and have the capability to be used in space applications. The intent of Level 3 listings is to provide products that are newer, have greater functionality and enhanced performance characteristics, and provide higher levels of integration. Because the product has little or no

heritage in space flight application and data is unavailable or scarce, these parts are considered higher risk than the Level 1 and Level 2 parts. While the price of these parts may be less than the traditional Levels, more engineering evaluation may be needed to qualify the part for the project's application. The overall reliability and cost of ownership should be considered when selecting these parts. The Level 3 criteria is summarized as follows:

The manufacturer has supplied and qualified parts for several NASA space projects within the past 2 years. The parts and manufacturers have been recommended by one of the following NASA programs.

o PSAP o ASAP o ET o AIT

A NASA, DoD, or other space agency procurement specification (e.g. ESA SCC or NASDA QTS) exists. Available data on the manufacturer shows no significant problem trends such as GIDEP Alerts or NASA Parts Advisories, a low DPA rejection rate for the manufacturer's products in general, and no significant failures attributable to product quality and/or reliability.

NEPAG recommends selecting a Level 3 product when a higher Level part does not exist and/or enhanced functionality is required to meet system design requirements. Parts in this Level are not recommended for use in mission critical applications. Selecting these parts may require further engineering evaluation and approval by the project, but some heritage exists. Additionally, having more projects use these parts helps NEPAG acquire the technical data necessary for moving the parts into the higher Levels.

Home
|
NASA Parts Selection List (NPSL)
| Capacitors
About NPSL
Prohibited Materials
Parts Selection Table of Contents
Capacitors
Circuit Protection Devices
Fuses
Connectors
Filters
Inductors
Microcircuits
NEW!
Monolithics
Hybrids
Resistors
Semiconductors
(Summary)
Diodes
Transistors
Thermistors
Wire and Cable

NASA Parts Selection List

Capacitors

The following basic capacitor dielectric types are available for selection:

Ceramic	MIL-PRF-20	CCR	MIL-PRF-123	CKS	MIL-PRF-39014	CKR	MIL-PRF-55681	CDR	MIL-PRF-49470	PS	DSCC-DWG-87106	----	Glass	MIL-PRF-23269	CY
Tantalum	MIL-PRF-39003	CSR, CSS	MIL-PRF-39006	CLR	MIL-PRF-55365	CWR							Plastic Film	MIL-PRF-8342	

Parts
|
Packaging
|
Radiation

|

Publications

|

Calendar

|

Experts

Admin Login

|

Request Account

|

Feedback

|

Site Map

|

Help

|

Search

NEPP Program Manager:

Chuck Barnes, Jet Propulsion Laboratory

Responsible NASA Official:

Michael Sampson, NEPAG Manager

Website Comments:

Web Development Team

Last Modified:

August 8, 2001

AETD IT Security Banner

NASA Privacy Statement

Capacitor Manufacturer Listing

And Links to Manufacturer Homepages

Click

here

for detailed information regarding part technologies offered by manufacturers listed in the

PSAP

Core Suppliers List

Listed below are links to manufacturer data sites that may provide additional part related information. The linked sites are not under the control of NPSL and NASA is not responsible for information contained in the linked site. We are providing these links for your convenience only.

ATC

American Technical Ceramics

One Norden Lane

Huntington Station, NY 11746

CAGE Code: 29990
Tel.: (516) 622-4700
AVX
AVX Corporation
17th Avenue South
Myrtle Beach, SC 29577
CAGE Code: 04222
Tel.: (803) 946-0228
AVX
AVX Corporation
3900 Electronics Drive
Raleigh, NC 16299
CAGE Code: 16299
Tel.: (919) 876-1100
AVX
AVX Tantalum Corporation
69 Landry Street
Biddeford, ME 04005
CAGE Code: 17554
Tel.: (207) 282-5111
CRC
Component Research Corporation
1655 26th Street
Santa Monica, CA 90404
CAGE Code: 12517
Tel.: (213) 829-3615
DEI
Dearborn Electronics, Inc.
1221 N. Highways 17 92
Longwood, FL 32750
CAGE Code: 01884
Tel.: (305) 695-6562
KEM
Kemet Electronics Corporation
2835 Kemet Way
Simpsonville, SC 29681
CAGE Code: 31433
Tel.: (803) 963-6300
MAL
Mallory, Division of North American Capacitors

P.O. Box 489 1701 Indianapolis Road
Greencastle, IN 46153
CAGE Code: 37942
Tel.: (317) 653-3151
PRE
Presidio Components, Inc.
7169 Construction Court
San Diego, CA 92121
CAGE Code: 60212
Tel.: (619) 578-9390
SPR
Sprague Palm Beach, A Vishay Company
5900 Australian Avenue
West Palm Beach, FL 33407
CAGE Code: 26769
Tel.: (401) 863-1854
SPR
Sprague Sanford, Inc., A Vishay Company
P.O. Box 231 Lower Main Street
Sanford, ME 04073
CAGE Code: 2N936
Tel.: (207) 324-4140
TAN
Tansitor Electronics
P.O. Box 230 West Road
Bennington, VT 05201
CAGE Code: 05079
Tel.: (802) 442-5473
VIS
Vishay Sprague
70 Pembroke Road
Concord, NH 03301
CAGE Code: 13606
Tel.: (603) 224-1961
VIT
Vitramon, Inc., A Vishay Company
P.O. Box 554 Route 25
Bridgeport, CT 06601
CAGE Code: 95275
Tel.: (203) 452-5606

Ceramic Capacitors

The following ceramic capacitor specifications are available for selection:

Military Specification	Generic Designator	Description
MIL-PRF-20	CCR	Fixed, Ceramic, Temperature Compensating, Established Reliability Radial Lead or Axial Lead
MIL-PRF-123	CKS	Fixed, Ceramic,Space Level Radial Lead, Axial Lead, Chip or DIP
MIL-PRF-39014	CKR	Fixed, Ceramic, Established Reliability Radial Lead, Axial Lead or DIP
MIL-PRF-55681	CDR	Fixed, Ceramic, Chip, Established Reliability
MIL-PRF-49470	PS	Fixed, Ceramic Dielectric, Switch Mode Power Supply Stacked Chips with Lead Frames for Level 2 Applications
DSCC-DWG-87106	---	Fixed, Ceramic, Switch Mode Power Supply Stacked Chips with Lead Frames for Level 3 Applications

Packaging

|

Radiation

|

Publications

|

Calendar

|

Experts

Admin Login

|

Request Account

|

Feedback

|

Site Map

|

Help

|

Search

NEPP Program Manager:

Chuck Barnes, Jet Propulsion Laboratory

Responsible NASA Official:

Michael Sampson, NEPAG Manager

Website Comments:

Web Development Team

Last Modified:

August 8, 2001

AETD IT Security Banner

NASA Privacy Statement

Ceramic Capacitor Manufacturer Listing

And Links to Manufacturer Homepages

Click

here

for detailed information regarding part technologies offered by manufacturers listed in the

PSAP

Core Suppliers List

Listed below are links to manufacturer data sites that may provide additional part related information. The linked sites are not under the control of NPSL and NASA is not responsible for information contained in the linked site. We are providing these links for your convenience only.

ATC

American Technical Ceramics
One Norden Lane
Huntington Station, NY 11746
CAGE Code: 29990
Tel.: (516) 622-4700
AVX
AVX Corporation
17th Avenue South
Myrtle Beach, SC 29577
CAGE Code: 04222
Tel.: (803) 946-0228
AVX1
Olean Advanced Products (Division
of AVX Corp.)
1696 Seneca Avenue
Olean, NY 14760
CAGE Code: 96095
Tel.:
JDI
Johanson Dielectrics, Inc.
823 Gateway Center Way
San Diego, CA 92102
CAGE Code: 07EN1
KDC
KD Components, Incorporated
2151 Challenger Way
Carson City, NV 89706
Tel: (702) 883-8003
KEM
Kemet Electronics Corporation
2835 Kemet Way
Simpsonville, SC 29681
CAGE Code: 31433
Tel.: (803) 963-6300
PRE
Presidio Components, Inc.
7169 Construction Court
San Diego, CA 92121
CAGE Code: 60212
Tel.: (619) 578-9390

VIT

Vitramon, Inc., A Vishay Company

P.O. Box 554 Route 25

Bridgeport, CT 06601

CAGE Code: 95275

Tel.: (203) 452-5606

Click on the links below to see the associated parts selection listing:

Style	Detail Specification	Description (Click Link Below for Dimensional Drawings)	Available Capacitance Range (Rated Voltage)
CKS05	MIL-PRF-123/1	Molded, Radial Lead	4.7 pF to 4,700 pF (100 V); 270 pF to 10,000 pF (50 V)
CKS06	MIL-PRF-123/2	Molded, Radial Lead	270 pF to 100,000 pF (100 V); 2,700 pF to 1,000,000 pF (50 V)
CKS07	MIL-PRF-123/3	Molded, Radial Lead	2,700 pF to 470,000 pF (100 V); 11,000 pF to 1,000,000 pF (50 V)
CKS11	MIL-PRF-123/4	Molded, Axial Lead	4.7 pF to 1,000 pF (100 V); 110 pF to 4,700 pF (50 V)
CKS12	MIL-PRF-123/5	Molded, Axial Lead	110 pF to 4,700 pF (100 V); 240 pF to 10,000 pF (50 V)
CKS14	MIL-PRF-123/6	Molded, Axial Lead	240 pF to 10,000 pF (100 V); 1,100 pF to 47,000 pF (50 V)
CKS15	MIL-PRF-123/7	Molded, Axial Lead	1,100 pF to 100,000 pF (100 V); 2,400 pF to 180,000 pF (50 V)
CKS16	MIL-PRF-123/8	Molded, Axial Lead	2,400 pF to 470,000 pF (100 V); 11,000 pF to 1,000,000 pF (50 V)
CKS51	MIL-PRF-123/10	Chip (0805)	1 pF to 4,700 pF (50 V)
CKS52	MIL-PRF-123/11	Chip (1210)	300 pF to 47,000 pF (50 V)
CKS53	MIL-PRF-123/12	Chip (1808)	300 pF to 100,000 pF (50 V)
CKS54	MIL-PRF-123/13	Chip (2225)	1,100 pF to 470,000 pF (50 V)
CKS22	MIL-PRF-123/16	Molded, 2 Pin DIP	1 pF to 820 pF (200 V); 1,000 pF to 10,000 pF (100 V); 12,000 pF to 100,000 pF (50 V)
CKS23	MIL-PRF-123/17	Molded, 2 Pin DIP	560 pF to 10,000 pF (200 V); 2,700 pF to 220,000 pF (100 V); 4,700 pF to 10,000 pF (50 V)
CKS24	MIL-PRF-123/18	Molded, 2 Pin DIP	120,000 pF to 470,000 pF (100 V)

APPLICATION NOTES FOR MIL-PRF-123

Failure Rate Level (FRL) is not applicable to MIL-PRF-123. Part lots are essentially qualified on a lot by lot basis in accordance with the Group A and Group B test requirements of MIL-PRF-123.

MIL-PRF-123 capacitors are recommended for use in low voltage applications (< 10 Vdc). The test requirements imposed on the manufacturer are effective at identifying part lots which may be susceptible to the low voltage failure mechanism observed in multilayer ceramic capacitors.

Revision History for MIL-PRF-123 Listing in the NPSL

05/08/00	Fixed typo in CKS24 parts list section. Values from 180,000 pF to 470,000 pF are available as 50 V parts not 100 V as previously listed. Also added tolerance "M" where appropriate to this section.
04/13/99	Added values from 0.56 uF up to 1.0 uF to CKS06 style since Kemet recently qualified these styles.
04/13/99	Added Presidio Components Inc. to list of available sources for some CKS51 chip style parts.
04/13/99	Updated the pages to reflect the conversion of the specification to a "Performance Specification" (i.e, MIL-PRF-123 instead of MIL-C-123).
05/21/98	Added column to the "styles" page to show the available capacitance range and rated voltages for quick reference.
03/03/98	Added dimensional drawings to this section
05/01/97	Initial Release of MIL-C-123 Section in the NPSL

Part Number Ordering Information, example and explanation:

M123A01BPC4R7CW where,

M123A	01	B	P	C	4R7	C
Military Specification Number	Detail Specification Number	Rated Temp. Range (-55deg.C to +125deg.C)	Change in Cap with Rated Voltage and Temp.	Rated Voltage	Capacitance Value	Capacitance Tolerance

Part number ordering options are developed using the following criteria:

Style	Detail Specification		Termination (Leaded)	Termination [Non-Leaded (Chips)]
CKS05	MIL-PRF-123/1		C = solder over Cu, 60 microinches minimum	G = Silver/Nickel/Gold
CKS06	MIL-PRF-123/2		W = solder over Cu clad steel, 60 microinches minimum	M = Palladium/Silver alloy
CKS07	MIL-PRF-123/3			S = Guarded, solder-coated
CKS11	MIL-PRF-123/4			
CKS12	MIL-PRF-123/5			
CKS14	MIL-PRF-123/6			
CKS15	MIL-PRF-123/7			
CKS16	MIL-PRF-123/8			
CKS51	MIL-PRF-123/10			
CKS52	MIL-PRF-123/11			
CKS53	MIL-PRF-123/12			
CKS54	MIL-PRF-123/13			
CKS22	MIL-PRF-123/14			
CKS23	MIL-PRF-123/16			
CKS24	MIL-PRF-123/17			

Note: A "guarded" termination is one in which the interelectrode metallization is separated from the final finish by a barrier or guard metal; e.g., copper or nickel, etc.

Temperature Characteristic at Rated Voltage		Capacitance Tolerance		Rated Voltage
BP = +/- 30 ppm/deg.C		C = +/- 0.25 %		B = 50 V
BX = + 15%, -25%		D = +/- 0.50 %		C = 100 V
BR = + 15%, -40%		F = +/- 1.0 %		D = 200 V
		J = +/- 5.0 %		
		K = +/- 10.0 %		

Capacitor Values:

Capacitance values in picofarads are contained in the following listing. When ordering, the first two digits represent significant figures and the last digit specifies the number of zeroes to follow. For example 101 indicates 100 pF and 102 indicates 1000 pF. The letter "R" shall be used to indicate a decimal point when required. For example 1R0 indicates 1.0 pF.

MIL-PRF-123, CAPACITORS

Axial Lead, Multiple Layer, Fixed, Ceramic Dielectric, Space Level

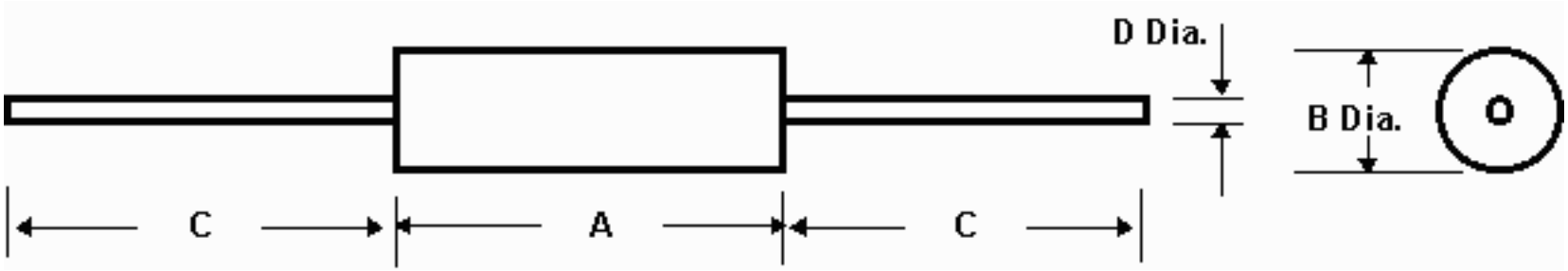

All dimensions are in inches

Style	A	B	C	D
CKS11	0.160+/-0.010	0.090+/-0.010	1.250 min.	0.020+/-0.002
CKS12	0.250+/-0.010	0.090+/-0.010	1.250 min.	0.020+/-0.002
CKS14	0.390+/-0.010	0.140+/-0.010	1.250 min.	0.025+/-0.002
CKS15	0.500+/-0.020	0.250+/-0.020	1.250 min.	0.025+/-0.002
CKS16	0.690+/-0.020	0.350+/-0.020	1.250 min.	0.025+/-0.002

MIL-PRF-123, CAPACITORS

Chip, Multiple Layer, Fixed, Unencapsulated, Ceramic Dielectric, Space Level

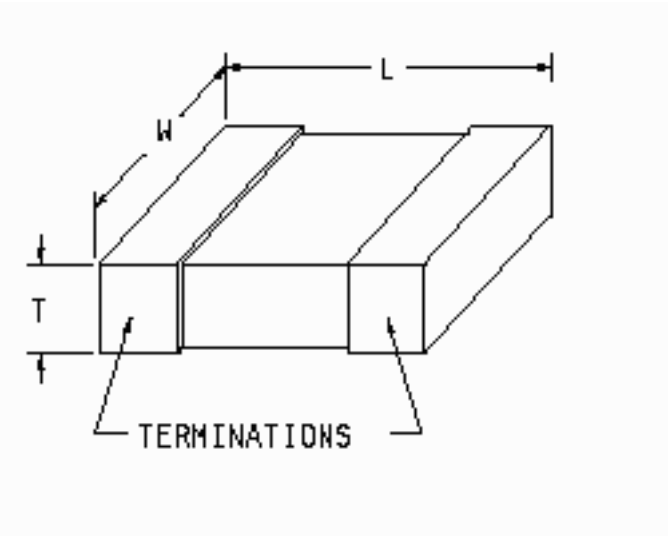

Physical Dimensions Table

			Length (inches)			Width (inches)			Thickness (inches)
CKS	Nominal	Tol. Bare Chip	Tol. Solder Coated	Nominal	Tol. Bare Chip	Tol. Solder Coated	Min.	Max.	Max. Solder Coated
51	0.080	+/-0.015	+0.035, -0.015	0.050	+/-0.015	+0.030, -0.015	0.020	0.055	0.070
52	0.120	+/-0.015	+0.040, -0.015	0.100	+/-0.015	+0.030, -0.015	0.020	0.065	0.080
53	0.180	+/-0.015	+0.040, -0.015	0.080	+/-0.015	+0.030, -0.015	0.020	0.065	0.080
54	0.220	+/-0.015	+0.040, -0.015	0.250	+/-0.015	+0.030, -0.015	0.020	0.070	0.085

MIL-PRF-123, CAPACITORS

Dual In-Line Package (DIP), Multiple Layer, Fixed, Ceramic Dielectric, Space Level

Style CKS22

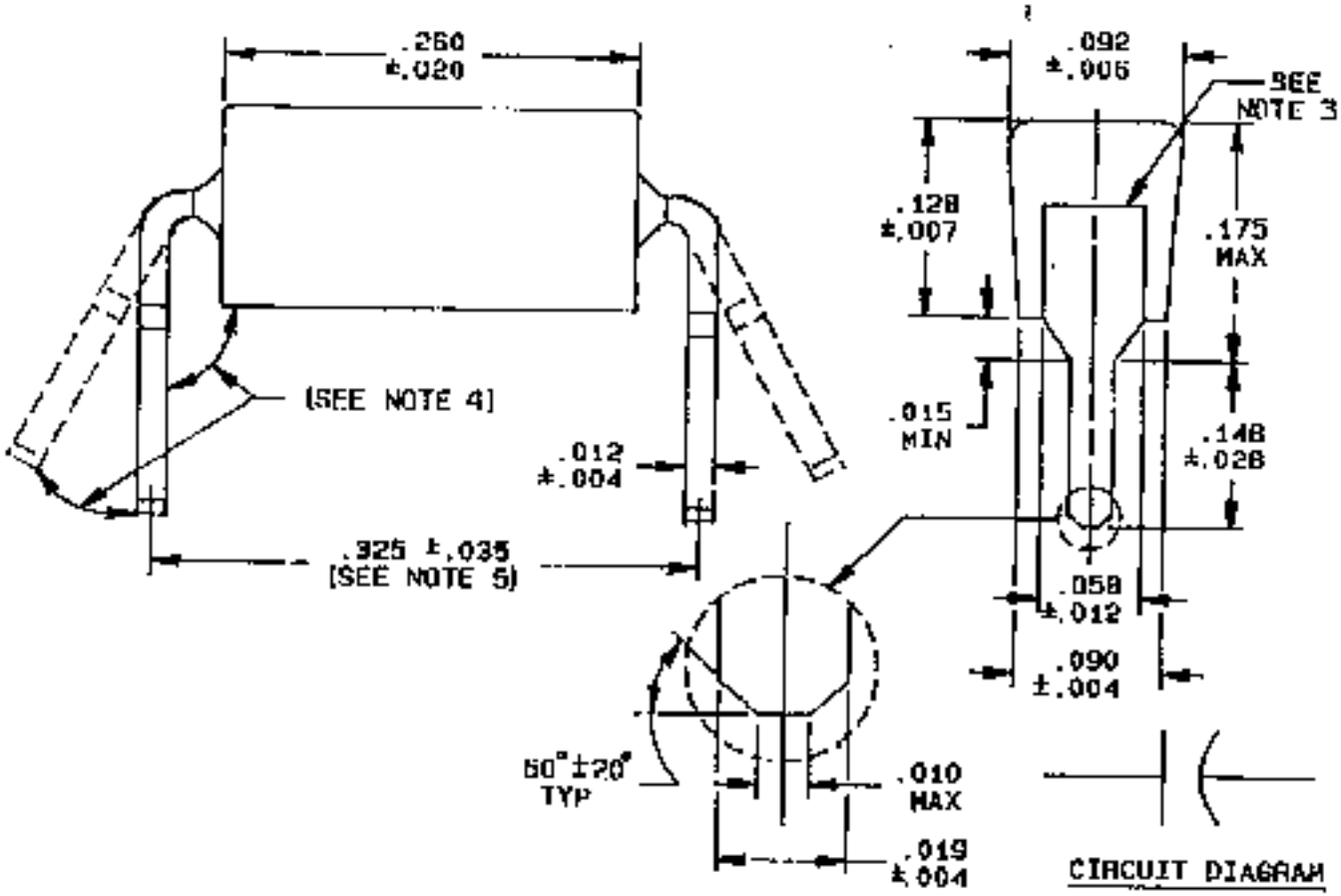
.260
±.020
(SEE NOTE 4)
.012
±.004
.325 ±.035
(SEE NOTE 5)
.092
±.005
SEE
NOTE 3
.128
±.007
.175
MAX
.015
MIN
.148
±.028
.058
±.012
.090
±.004
60°±20°
TYP
.010
MAX
.019
±.004
CIRCUIT DIAGRAM

Style CKS23

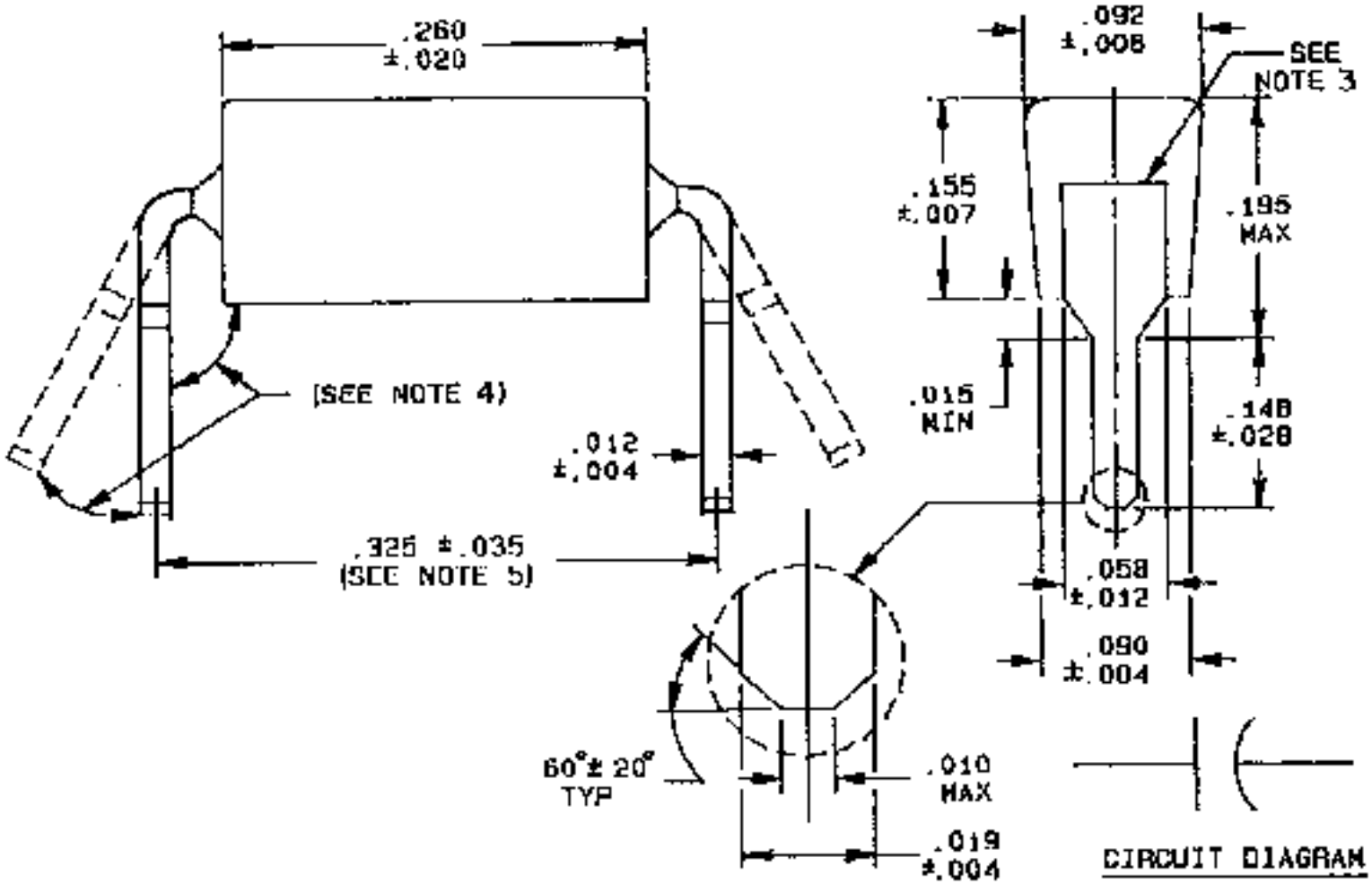
.260
±.020
(SEE NOTE 4)
.012
±.004
.325 ±.035
(SEE NOTE 5)
60°± 20°
TYP
.010
MAX
.019
±.004
.092
±.008
SEE
NOTE 3
.155
±.007
.195
MAX
.015
MIN
.148
±.028
.058
±.012
.090
±.004
CIRCUIT DIAGRAM

Style CKS24

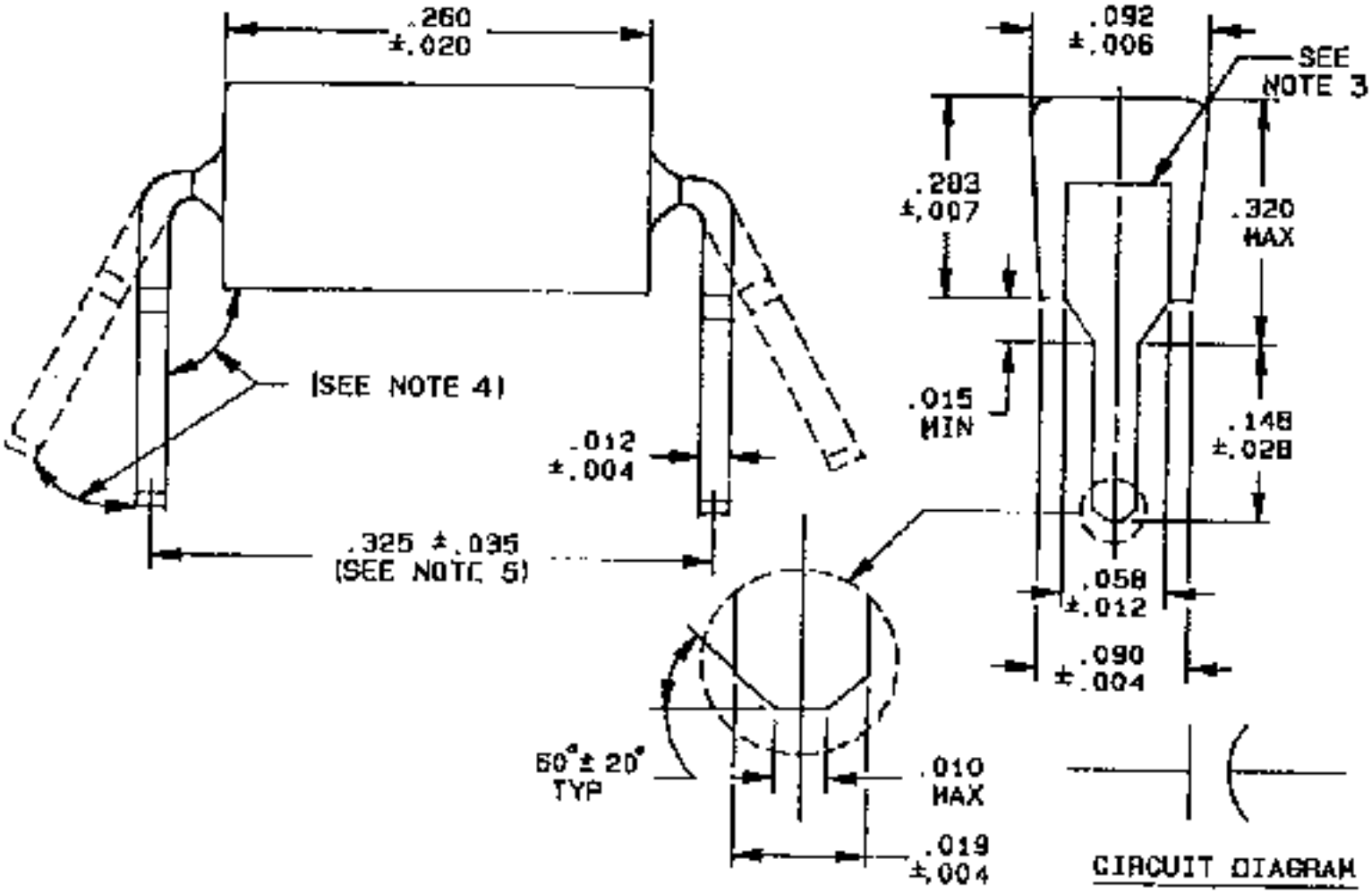
.260
±.020
.092
±.006
SEE
NOTE 3
.203
±.007
.320
MAX
(SEE NOTE 4)
.015
MIN
.148
±.028
.012
±.004
.325 ±.035
(SEE NOTE 5)
.058
±.012
.090
±.004
60° ± 20°
TYP
.010
MAX
.019
±.004
CIRCUIT DIAGRAM

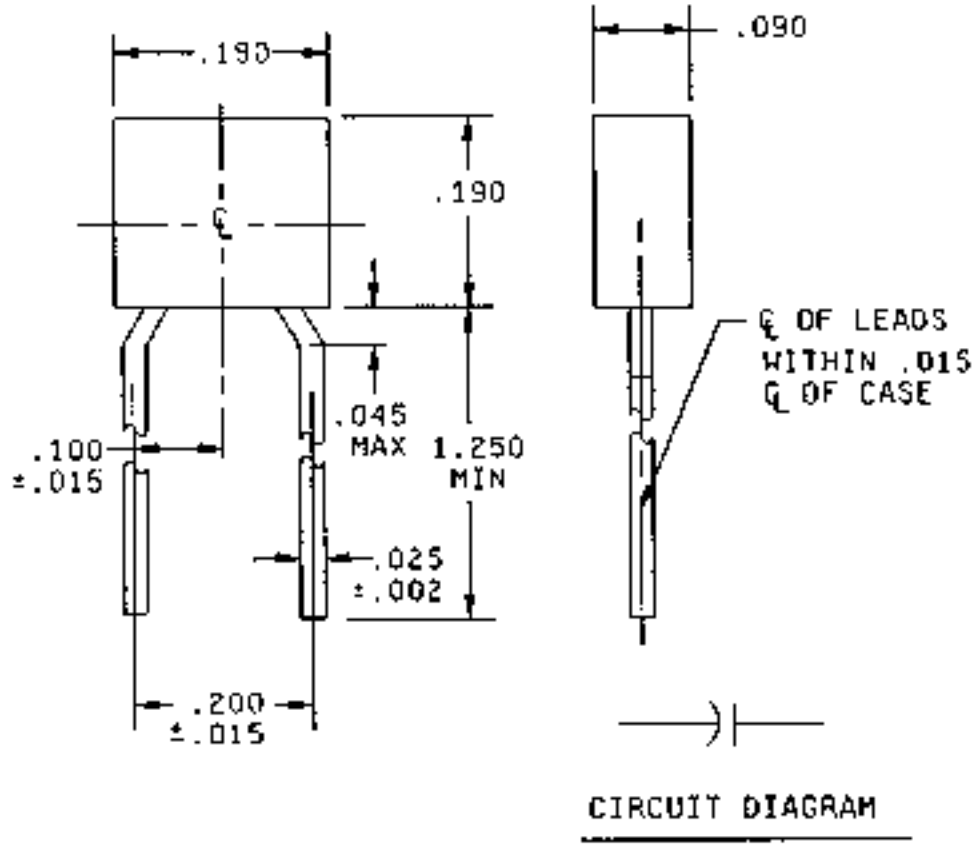

Inches	mm	Inches	mm
.002	0.05	.100	2.54
.015	0.38	.190	4.83
.025	0.64	.200	5.08
.045	1.14	1.250	31.75
.090	2.29		

Style CKS06

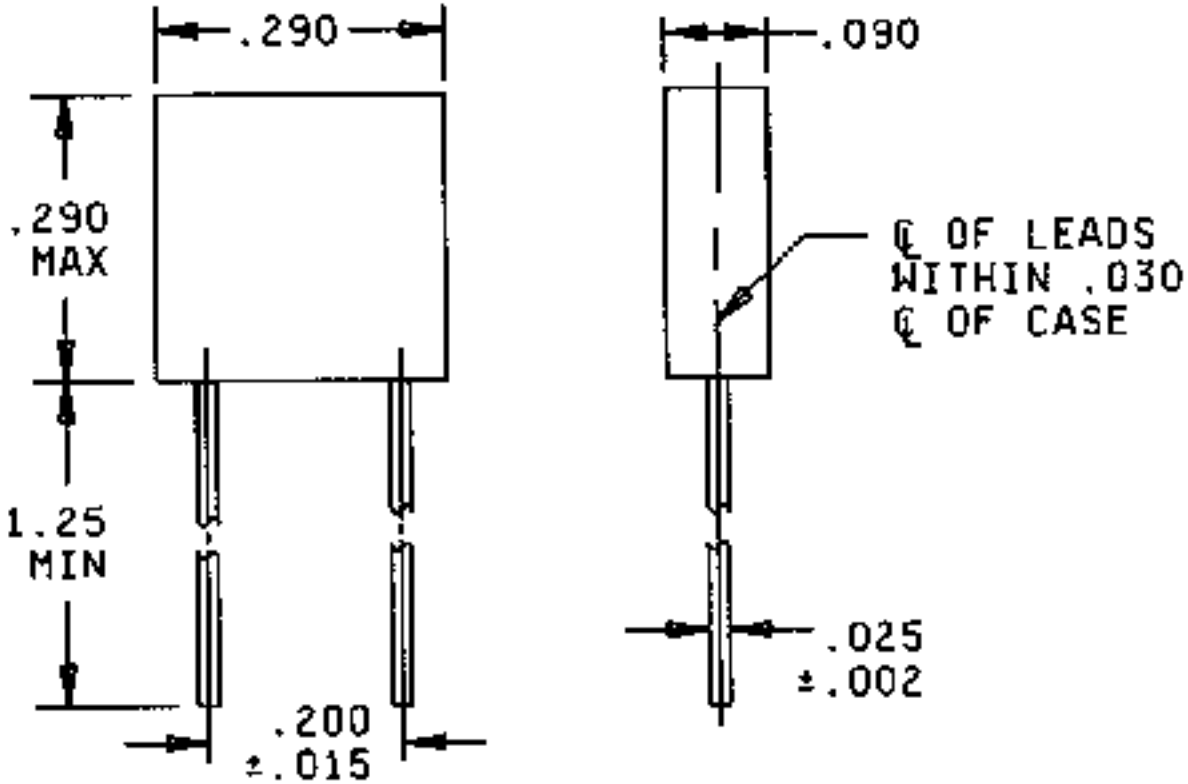

Inches	mm
.002	0.05
.015	0.38
.025	0.64
.030	0.76
.090	2.29
.200	5.08
.290	7.37
1.25	31.75

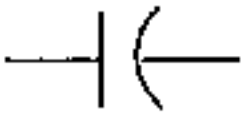

CIRCUIT DIAGRAM

Style CKS07

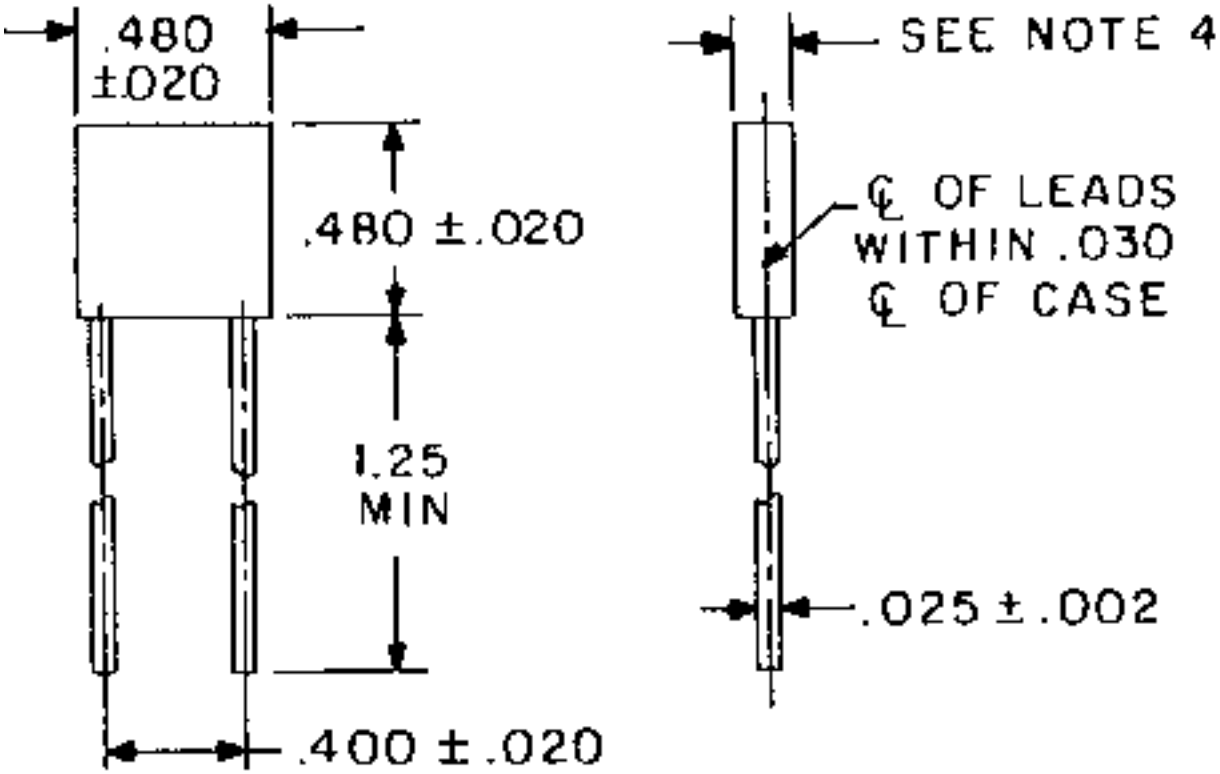

Inches	mm	Inches	mm
.002	0.05	.400	10.16
.020	0.51	.480	12.19
.025	0.64	1.25	31.8
.030	0.76		

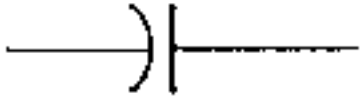

CIRCUIT DIAGRAM

Notes:

All dimensions are in inches.

Metric equivalents are given for general information only.

Unless otherwise specified, tolerance is +/-0.010 inches.

For CKS07 capacitors, the thickness shall be 0.200 inches maximum for capacitance values of 82000, 91000, and 100000 pF in BP dielectric, and 0.140+/-0.010 inches for all others.

CKS05 Ceramic Capacitors

	Capacitance	Rated	Capacitance	Termination		
Part Number	Value (pF)	Voltage (V)	Tolerance (%)	Finish (#)	Level	Manufacturer
M123A01BPC4R7%C	4.7	100	C, D	C	1 or 2	AVX, KEM
M123A01BPC5R1%C	5.1	100	C, D	C	1 or 2	AVX, KEM
M123A01BPC5R6%C	5.6	100	C, D	C	1 or 2	AVX, KEM
M123A01BPC6R2%C	6.2	100	C, D	C	1 or 2	AVX, KEM
M123A01BPC6R8%C	6.8	100	C, D	C	1 or 2	AVX, KEM
M123A01BPC7R5%C	7.5	100	C, D	C	1 or 2	AVX, KEM
M123A01BPC8R2%C	8.2	100	C, D	C	1 or 2	AVX, KEM
M123A01BPC9R1%C	9.1	100	C, D	C	1 or 2	AVX, KEM
M123A01BPC100%C	10	100	C, J, K	C	1 or 2	AVX, KEM
M123A01BPC110%C	11	100	C, J, K	C	1 or 2	AVX, KEM
M123A01BPC120%C	12	100	C, J, K	C	1 or 2	AVX, KEM
M123A01BPC130%C	13	100	C, J, K	C	1 or 2	AVX, KEM
M123A01BPC150%C	15	100	C, J, K	C	1 or 2	AVX, KEM
M123A01BPC160%C	16	100	C, J, K	C	1 or 2	AVX, KEM
M123A01BPC180%C	18	100	C, J, K	C	1 or 2	AVX, KEM
M123A01BPC200%C	20	100	C, J, K	C	1 or 2	AVX, KEM
M123A01BPC220%C	22	100	C, J, K	C	1 or 2	AVX, KEM
M123A01BPC240%C	24	100	C, J, K	C	1 or 2	AVX, KEM
	Capacitance	Rated	Capacitance	Termination		
Part Number	Value (pF)	Voltage (V)	Tolerance (%)	Finish (#)	Level	Manufacturer
M123A01BPC270%C	27	100	F, J, K	C	1 or 2	AVX, KEM
M123A01BPC300%C	30	100	F, J, K	C	1 or 2	AVX, KEM
M123A01BPC330%C	33	100	F, J, K	C	1 or 2	AVX, KEM
M123A01BPC360%C	36	100	F, J, K	C	1 or 2	AVX, KEM
M123A01BPC390%C	39	100	F, J, K	C	1 or 2	AVX, KEM
M123A01BPC430%C	43	100	F, J, K	C	1 or 2	AVX, KEM
M123A01BPC470%C	47	100	F, J, K	C	1 or 2	AVX, KEM
M123A01BPC510%C	51	100	F, J, K	C	1 or 2	AVX, KEM
M123A01BPC560%C	56	100	F, J, K	C	1 or 2	AVX, KEM
M123A01BPC620%C	62	100	F, J, K	C	1 or 2	AVX, KEM
M123A01BPC680%C	68	100	F, J, K	C	1 or 2	AVX, KEM
M123A01BPC750%C	75	100	F, J, K	C	1 or 2	AVX, KEM
M123A01BPC820%C	82	100	F, J, K	C	1 or 2	AVX, KEM
M123A01BPC910%C	91	100	F, J, K	C	1 or 2	AVX, KEM
M123A01BPC101%C	100	100	F, J, K	C	1 or 2	AVX, KEM
M123A01BPC111%C	110	100	F, J, K	C	1 or 2	AVX, KEM
M123A01BPC121%C	120	100	F, J, K	C	1 or 2	AVX, KEM

M123A01BPC131%C	130	100	F, J, K	C	1 or 2	AVX, KEM
	Capacitance	Rated	Capacitance	Termination		
Part Number	Value (pF)	Voltage (V)	Tolerance (%)	Finish (#)	Level	Manufacturer
M123A01BPC151%C	150	100	F, J, K	C	1 or 2	AVX, KEM
M123A01BPC161%C	160	100	F, J, K	C	1 or 2	AVX, KEM
M123A01BPC181%C	180	100	F, J, K	C	1 or 2	AVX, KEM
M123A01BPC201%C	200	100	F, J, K	C	1 or 2	AVX, KEM
M123A01BPC221%C	220	100	F, J, K	C	1 or 2	AVX, KEM
M123A01BPC241%C	240	100	F, J, K	C	1 or 2	AVX, KEM
M123A01BPB271%C	270	50	F, J, K	C	1 or 2	AVX, KEM
M123A01BPB301%C	300	50	F, J, K	C	1 or 2	AVX, KEM
M123A01BPB331%C	330	50	F, J, K	C	1 or 2	AVX, KEM
M123A01BPB361%C	360	50	F, J, K	C	1 or 2	AVX, KEM
M123A01BPB391%C	390	50	F, J, K	C	1 or 2	AVX, KEM
M123A01BPB431%C	430	50	F, J, K	C	1 or 2	AVX, KEM
M123A01BPB471%C	470	50	F, J, K	C	1 or 2	AVX, KEM
M123A01BPB511%C	510	50	F, J, K	C	1 or 2	AVX, KEM
M123A01BPB561%C	560	50	F, J, K	C	1 or 2	AVX, KEM
M123A01BPB621%C	620	50	F, J, K	C	1 or 2	AVX, KEM
M123A01BPB681%C	680	50	F, J, K	C	1 or 2	AVX, KEM
M123A01BPB751%C	750	50	F, J, K	C	1 or 2	AVX, KEM
	Capacitance	Rated	Capacitance	Termination		
Part Number	Value (pF)	Voltage (V)	Tolerance (%)	Finish (#)	Level	Manufacturer
M123A01BPB821%C	820	50	F, J, K	C	1 or 2	AVX, KEM
M123A01BPB911%C	910	50	F, J, K	C	1 or 2	AVX, KEM
M123A01BPB102%C	1000	50	F, J, K	C	1 or 2	AVX, KEM
M123A01BPB112%C	1100	50	F, J, K	C	1 or 2	AVX, KEM
M123A01BPB122%C	1200	50	F, J, K	C	1 or 2	AVX, KEM
M123A01BPB132%C	1300	50	F, J, K	C	1 or 2	AVX, KEM
M123A01BPB152%C	1500	50	F, J, K	C	1 or 2	AVX, KEM
M123A01BPB162%C	1600	50	F, J, K	C	1 or 2	AVX, KEM
M123A01BPB182%C	1800	50	F, J, K	C	1 or 2	AVX, KEM
M123A01BPB202%C	2000	50	F, J, K	C	1 or 2	AVX, KEM
M123A01BPB222%C	2200	50	F, J, K	C	1 or 2	AVX, KEM
M123A01BPB242%C	2400	50	F, J, K	C	1 or 2	AVX, KEM
M123A01BPB272%C	2700	50	F, J, K	C	1 or 2	AVX, KEM
M123A01BXC271KC	270	100	K	C	1 or 2	AVX, KEM
M123A01BXC331KC	330	100	K	C	1 or 2	AVX, KEM
M123A01BXC391KC	390	100	K	C	1 or 2	AVX, KEM
M123A01BXC471KC	470	100	K	C	1 or 2	AVX, KEM
M123A01BXC561KC	560	100	K	C	1 or 2	AVX, KEM
	Capacitance	Rated	Capacitance	Termination		
Part Number	Value (pF)	Voltage (V)	Tolerance (%)	Finish (#)	Level	Manufacturer
M123A01BXC681KC	680	100	K	C	1 or 2	AVX, KEM
M123A01BXC821KC	820	100	K	C	1 or 2	AVX, KEM
M123A01BXC102KC	1000	100	K	C	1 or 2	AVX, KEM
M123A01BXC122KC	1200	100	K	C	1 or 2	AVX, KEM

M123A01BXC152KC	1500	100	K	C	1 or 2	AVX, KEM
M123A01BXC182KC	1800	100	K	C	1 or 2	AVX, KEM
M123A01BXC222KC	2200	100	K	C	1 or 2	AVX, KEM
M123A01BXC272KC	2700	100	K	C	1 or 2	AVX, KEM
M123A01BXC332KC	3300	100	K	C	1 or 2	AVX, KEM
M123A01BXC392KC	3900	100	K	C	1 or 2	AVX, KEM
M123A01BXC472KC	4700	100	K	C	1 or 2	AVX, KEM
M123A01BXB562KC	5600	50	K	C	1 or 2	AVX, KEM
M123A01BXB682KC	6800	50	K	C	1 or 2	AVX, KEM
M123A01BXB822KC	8200	50	K	C	1 or 2	AVX, KEM
M123A01BXB103KC	10000	50	K	C	1 or 2	AVX, KEM
	Capacitance	Rated	Capacitance	Termination		
Part Number	Value (pF)	Voltage (V)	Tolerance (%)	Finish (#)	Level	Manufacturer

CKS05 Ceramic Capacitors

	Capacitance	Rated	Capacitance	Termination		
Part Number	Value (pF)	Voltage (V)	Tolerance (%)	Finish (#)	Level	Manufacturer
M123A01BPC4R7%C	4.7	100	C, D	C	1 or 2	AVX, KEM
M123A01BPC5R1%C	5.1	100	C, D	C	1 or 2	AVX, KEM
M123A01BPC5R6%C	5.6	100	C, D	C	1 or 2	AVX, KEM
M123A01BPC6R2%C	6.2	100	C, D	C	1 or 2	AVX, KEM
M123A01BPC6R8%C	6.8	100	C, D	C	1 or 2	AVX, KEM
M123A01BPC7R5%C	7.5	100	C, D	C	1 or 2	AVX, KEM
M123A01BPC8R2%C	8.2	100	C, D	C	1 or 2	AVX, KEM
M123A01BPC9R1%C	9.1	100	C, D	C	1 or 2	AVX, KEM
M123A01BPC100%C	10	100	C, J, K	C	1 or 2	AVX, KEM
M123A01BPC110%C	11	100	C, J, K	C	1 or 2	AVX, KEM
M123A01BPC120%C	12	100	C, J, K	C	1 or 2	AVX, KEM
M123A01BPC130%C	13	100	C, J, K	C	1 or 2	AVX, KEM
M123A01BPC150%C	15	100	C, J, K	C	1 or 2	AVX, KEM
M123A01BPC160%C	16	100	C, J, K	C	1 or 2	AVX, KEM
M123A01BPC180%C	18	100	C, J, K	C	1 or 2	AVX, KEM
M123A01BPC200%C	20	100	C, J, K	C	1 or 2	AVX, KEM
M123A01BPC220%C	22	100	C, J, K	C	1 or 2	AVX, KEM
M123A01BPC240%C	24	100	C, J, K	C	1 or 2	AVX, KEM
	Capacitance	Rated	Capacitance	Termination		
Part Number	Value (pF)	Voltage (V)	Tolerance (%)	Finish (#)	Level	Manufacturer
M123A01BPC270%C	27	100	F, J, K	C	1 or 2	AVX, KEM
M123A01BPC300%C	30	100	F, J, K	C	1 or 2	AVX, KEM
M123A01BPC330%C	33	100	F, J, K	C	1 or 2	AVX, KEM
M123A01BPC360%C	36	100	F, J, K	C	1 or 2	AVX, KEM
M123A01BPC390%C	39	100	F, J, K	C	1 or 2	AVX, KEM
M123A01BPC430%C	43	100	F, J, K	C	1 or 2	AVX, KEM
M123A01BPC470%C	47	100	F, J, K	C	1 or 2	AVX, KEM

M123A01BPC510%C	51	100	F, J, K	C	1 or 2	AVX, KEM
M123A01BPC560%C	56	100	F, J, K	C	1 or 2	AVX, KEM
M123A01BPC620%C	62	100	F, J, K	C	1 or 2	AVX, KEM
M123A01BPC680%C	68	100	F, J, K	C	1 or 2	AVX, KEM
M123A01BPC750%C	75	100	F, J, K	C	1 or 2	AVX, KEM
M123A01BPC820%C	82	100	F, J, K	C	1 or 2	AVX, KEM
M123A01BPC910%C	91	100	F, J, K	C	1 or 2	AVX, KEM
M123A01BPC101%C	100	100	F, J, K	C	1 or 2	AVX, KEM
M123A01BPC111%C	110	100	F, J, K	C	1 or 2	AVX, KEM
M123A01BPC121%C	120	100	F, J, K	C	1 or 2	AVX, KEM
M123A01BPC131%C	130	100	F, J, K	C	1 or 2	AVX, KEM
	Capacitance	Rated	Capacitance	Termination		
Part Number	Value (pF)	Voltage (V)	Tolerance (%)	Finish (#)	Level	Manufacturer
M123A01BPC151%C	150	100	F, J, K	C	1 or 2	AVX, KEM
M123A01BPC161%C	160	100	F, J, K	C	1 or 2	AVX, KEM
M123A01BPC181%C	180	100	F, J, K	C	1 or 2	AVX, KEM
M123A01BPC201%C	200	100	F, J, K	C	1 or 2	AVX, KEM
M123A01BPC221%C	220	100	F, J, K	C	1 or 2	AVX, KEM
M123A01BPC241%C	240	100	F, J, K	C	1 or 2	AVX, KEM
M123A01BPB271%C	270	50	F, J, K	C	1 or 2	AVX, KEM
M123A01BPB301%C	300	50	F, J, K	C	1 or 2	AVX, KEM
M123A01BPB331%C	330	50	F, J, K	C	1 or 2	AVX, KEM
M123A01BPB361%C	360	50	F, J, K	C	1 or 2	AVX, KEM
M123A01BPB391%C	390	50	F, J, K	C	1 or 2	AVX, KEM
M123A01BPB431%C	430	50	F, J, K	C	1 or 2	AVX, KEM
M123A01BPB471%C	470	50	F, J, K	C	1 or 2	AVX, KEM
M123A01BPB511%C	510	50	F, J, K	C	1 or 2	AVX, KEM
M123A01BPB561%C	560	50	F, J, K	C	1 or 2	AVX, KEM
M123A01BPB621%C	620	50	F, J, K	C	1 or 2	AVX, KEM
M123A01BPB681%C	680	50	F, J, K	C	1 or 2	AVX, KEM
M123A01BPB751%C	750	50	F, J, K	C	1 or 2	AVX, KEM
	Capacitance	Rated	Capacitance	Termination		
Part Number	Value (pF)	Voltage (V)	Tolerance (%)	Finish (#)	Level	Manufacturer
M123A01BPB821%C	820	50	F, J, K	C	1 or 2	AVX, KEM
M123A01BPB911%C	910	50	F, J, K	C	1 or 2	AVX, KEM
M123A01BPB102%C	1000	50	F, J, K	C	1 or 2	AVX, KEM
M123A01BPB112%C	1100	50	F, J, K	C	1 or 2	AVX, KEM
M123A01BPB122%C	1200	50	F, J, K	C	1 or 2	AVX, KEM
M123A01BPB132%C	1300	50	F, J, K	C	1 or 2	AVX, KEM
M123A01BPB152%C	1500	50	F, J, K	C	1 or 2	AVX, KEM
M123A01BPB162%C	1600	50	F, J, K	C	1 or 2	AVX, KEM
M123A01BPB182%C	1800	50	F, J, K	C	1 or 2	AVX, KEM
M123A01BPB202%C	2000	50	F, J, K	C	1 or 2	AVX, KEM
M123A01BPB222%C	2200	50	F, J, K	C	1 or 2	AVX, KEM
M123A01BPB242%C	2400	50	F, J, K	C	1 or 2	AVX, KEM
M123A01BPB272%C	2700	50	F, J, K	C	1 or 2	AVX, KEM
M123A01BXC271KC	270	100	K	C	1 or 2	AVX, KEM

M123A01BXC331KC	330	100	K	C	1 or 2	AVX, KEM
M123A01BXC391KC	390	100	K	C	1 or 2	AVX, KEM
M123A01BXC471KC	470	100	K	C	1 or 2	AVX, KEM
M123A01BXC561KC	560	100	K	C	1 or 2	AVX, KEM
	Capacitance	Rated	Capacitance	Termination		
Part Number	Value (pF)	Voltage (V)	Tolerance (%)	Finish (#)	Level	Manufacturer
M123A01BXC681KC	680	100	K	C	1 or 2	AVX, KEM
M123A01BXC821KC	820	100	K	C	1 or 2	AVX, KEM
M123A01BXC102KC	1000	100	K	C	1 or 2	AVX, KEM
M123A01BXC122KC	1200	100	K	C	1 or 2	AVX, KEM
M123A01BXC152KC	1500	100	K	C	1 or 2	AVX, KEM
M123A01BXC182KC	1800	100	K	C	1 or 2	AVX, KEM
M123A01BXC222KC	2200	100	K	C	1 or 2	AVX, KEM
M123A01BXC272KC	2700	100	K	C	1 or 2	AVX, KEM
M123A01BXC332KC	3300	100	K	C	1 or 2	AVX, KEM
M123A01BXC392KC	3900	100	K	C	1 or 2	AVX, KEM
M123A01BXC472KC	4700	100	K	C	1 or 2	AVX, KEM
M123A01BXB562KC	5600	50	K	C	1 or 2	AVX, KEM
M123A01BXB682KC	6800	50	K	C	1 or 2	AVX, KEM
M123A01BXB822KC	8200	50	K	C	1 or 2	AVX, KEM
M123A01BXB103KC	10000	50	K	C	1 or 2	AVX, KEM
	Capacitance	Rated	Capacitance	Termination		
Part Number	Value (pF)	Voltage (V)	Tolerance (%)	Finish (#)	Level	Manufacturer

CKS06 Ceramic Capacitors

	Capacitance	Rated	Capacitance	Termination		
Part Number	Value (pF)	Voltage (V)	Tolerance (%)	Finish (#)	Level	Manufacturer
M123A02BPC271%C	270	100	F, J, K	C	1 or 2	AVX, KEM
M123A02BPC301%C	300	100	F, J, K	C	1 or 2	AVX, KEM
M123A02BPC331%C	330	100	F, J, K	C	1 or 2	AVX, KEM
M123A02BPC361%C	360	100	F, J, K	C	1 or 2	AVX, KEM
M123A02BPC391%C	390	100	F, J, K	C	1 or 2	AVX, KEM
M123A02BPC431%C	430	100	F, J, K	C	1 or 2	AVX, KEM
M123A02BPC471%C	470	100	F, J, K	C	1 or 2	AVX, KEM
M123A02BPC511%C	510	100	F, J, K	C	1 or 2	AVX, KEM
M123A02BPC561%C	560	100	F, J, K	C	1 or 2	AVX, KEM
M123A02BPC621%C	620	100	F, J, K	C	1 or 2	AVX, KEM
M123A02BPC681%C	680	100	F, J, K	C	1 or 2	AVX, KEM
M123A02BPC751%C	750	100	F, J, K	C	1 or 2	AVX, KEM
M123A02BPC821%C	820	100	F, J, K	C	1 or 2	AVX, KEM
M123A02BPC911%C	910	100	F, J, K	C	1 or 2	AVX, KEM
M123A02BPC102%C	1000	100	F, J, K	C	1 or 2	AVX, KEM
M123A02BPC112%C	1100	100	F, J, K	C	1 or 2	AVX, KEM
M123A02BPC122%C	1200	100	F, J, K	C	1 or 2	AVX, KEM

M123A02BPC132%C	1300	100	F, J, K	C	1 or 2	AVX, KEM
	Capacitance	Rated	Capacitance	Termination		
Part Number	Value (pF)	Voltage (V)	Tolerance (%)	Finish (#)	Level	Manufacturer
M123A02BPC152%C	1500	100	F, J, K	C	1 or 2	AVX, KEM
M123A02BPC162%C	1600	100	F, J, K	C	1 or 2	AVX, KEM
M123A02BPC182%C	1800	100	F, J, K	C	1 or 2	AVX, KEM
M123A02BPC202%C	2000	100	F, J, K	C	1 or 2	AVX, KEM
M123A02BPC222%C	2200	100	F, J, K	C	1 or 2	AVX, KEM
M123A02BPC242%C	2400	100	F, J, K	C	1 or 2	AVX, KEM
M123A02BPB272%C	2700	50	F, J, K	C	1 or 2	AVX, KEM
M123A02BPB302%C	3000	50	F, J, K	C	1 or 2	AVX, KEM
M123A02BPB332%C	3300	50	F, J, K	C	1 or 2	AVX, KEM
M123A02BPB362%C	3600	50	F, J, K	C	1 or 2	AVX, KEM
M123A02BPB392%C	3900	50	F, J, K	C	1 or 2	AVX, KEM
M123A02BPB432%C	4300	50	F, J, K	C	1 or 2	AVX, KEM
M123A02BPB472%C	4700	50	F, J, K	C	1 or 2	AVX, KEM
M123A02BXC562KC	5600	100	K	C	1 or 2	AVX, KEM
M123A02BXC682KC	6800	100	K	C	1 or 2	AVX, KEM
M123A02BXC822KC	8200	100	K	C	1 or 2	AVX, KEM
M123A02BXC103KC	10000	100	K	C	1 or 2	AVX, KEM
M123A02BXC123KC	12000	100	K	C	1 or 2	AVX, KEM
	Capacitance	Rated	Capacitance	Termination		
Part Number	Value (pF)	Voltage (V)	Tolerance (%)	Finish (#)	Level	Manufacturer
M123A02BXC153KC	15000	100	K	C	1 or 2	AVX, KEM
M123A02BXC183KC	18000	100	K	C	1 or 2	AVX, KEM
M123A02BXC223KC	22000	100	K	C	1 or 2	AVX, KEM
M123A02BXC273KC	27000	100	K	C	1 or 2	AVX, KEM
M123A02BXC333KC	33000	100	K	C	1 or 2	AVX, KEM
M123A02BXC393KC	39000	100	K	C	1 or 2	AVX, KEM
M123A02BXC473KC	47000	100	K	C	1 or 2	AVX, KEM
M123A02BXC563KC	56000	100	K	C	1 or 2	AVX, KEM
M123A02BXC683KC	68000	100	K	C	1 or 2	AVX, KEM
M123A02BXC823KC	82000	100	K	C	1 or 2	AVX, KEM
M123A02BXC104KC	100000	100	K	C	1 or 2	AVX, KEM
M123A02BXB563KC	56000	50	K	C	1 or 2	AVX, KEM
M123A02BXB683KC	68000	50	K	C	1 or 2	AVX, KEM
M123A02BXB823KC	82000	50	K	C	1 or 2	AVX, KEM
M123A02BXB104KC	100000	50	K	C	1 or 2	AVX, KEM
M123A02BXB124KC	120000	50	K	C	1 or 2	AVX, KEM
M123A02BXB154KC	150000	50	K	C	1 or 2	AVX, KEM
M123A02BXB184KC	180000	50	K	C	1 or 2	AVX, KEM
	Capacitance	Rated	Capacitance	Termination		
Part Number	Value (pF)	Voltage (V)	Tolerance (%)	Finish (#)	Level	Manufacturer
M123A02BXB224KC	220000	50	K	C	1 or 2	AVX, KEM
M123A02BXB274KC	270000	50	K	C	1 or 2	AVX, KEM
M123A02BXB334KC	330000	50	K	C	1 or 2	AVX, KEM
M123A02BXB394KC	390000	50	K	C	1 or 2	AVX, KEM

M123A02BXB474KC	470000	50	K	C	1 or 2	AVX, KEM
M123A02BXB564KC	560000	50	K	C	1 or 2	KEM
M123A02BXB684KC	680000	50	K	C	1 or 2	KEM
M123A02BXB824KC	820000	50	K	C	1 or 2	KEM
M123A02BXB105KC	1000000	50	K	C	1 or 2	KEM
	Capacitance	Rated	Capacitance	Termination		
Part Number	Value (pF)	Voltage (V)	Tolerance (%)	Finish (#)	Level	Manufacturer

CKS07 Ceramic Capacitors

	Capacitance	Rated	Capacitance	Termination		
Part Number	Value (pF)	Voltage (V)	Tolerance (%)	Finish (#)	Level	Manufacturer
M123A03BPC272%C	2700	100	F, J, K	C	1 or 2	KEM
M123A03BPC302%C	3000	100	F, J, K	C	1 or 2	KEM
M123A03BPC332%C	3300	100	F, J, K	C	1 or 2	KEM
M123A03BPC362%C	3600	100	F, J, K	C	1 or 2	KEM
M123A03BPC392%C	3900	100	F, J, K	C	1 or 2	KEM
M123A03BPC432%C	4300	100	F, J, K	C	1 or 2	KEM
M123A03BPC472%C	4700	100	F, J, K	C	1 or 2	KEM
M123A03BPC512%C	5100	100	F, J, K	C	1 or 2	KEM
M123A03BPC562%C	5600	100	F, J, K	C	1 or 2	KEM
M123A03BPC622%C	6200	100	F, J, K	C	1 or 2	KEM
M123A03BPC682%C	6800	100	F, J, K	C	1 or 2	KEM
M123A03BPC752%C	7500	100	F, J, K	C	1 or 2	KEM
M123A03BPC822%C	8200	100	F, J, K	C	1 or 2	KEM
M123A03BPC912%C	9100	100	F, J, K	C	1 or 2	KEM
M123A03BPC103%C	10000	100	F, J, K	C	1 or 2	KEM
M123A03BPB113%C	11000	50	F, J, K	C	1 or 2	KEM
M123A03BPB123%C	12000	50	F, J, K	C	1 or 2	KEM
M123A03BPB133%C	13000	50	F, J, K	C	1 or 2	KEM
	Capacitance	Rated	Capacitance	Termination		
Part Number	Value (pF)	Voltage (V)	Tolerance (%)	Finish (#)	Level	Manufacturer
M123A03BPB153%C	15000	50	F, J, K	C	1 or 2	KEM
M123A03BPB163%C	16000	50	F, J, K	C	1 or 2	KEM
M123A03BPB183%C	18000	50	F, J, K	C	1 or 2	KEM
M123A03BPB203%C	20000	50	F, J, K	C	1 or 2	KEM
M123A03BPB223%C	22000	50	F, J, K	C	1 or 2	KEM
M123A03BPB243%C	24000	50	F, J, K	C	1 or 2	KEM
M123A03BPB273%C	27000	50	F, J, K	C	1 or 2	KEM
M123A03BPB303%C	30000	50	F, J, K	C	1 or 2	KEM
M123A03BPB333%C	33000	50	F, J, K	C	1 or 2	KEM
M123A03BPB363%C	36000	50	F, J, K	C	1 or 2	KEM
M123A03BPB393%C	39000	50	F, J, K	C	1 or 2	KEM
M123A03BPB433%C	43000	50	F, J, K	C	1 or 2	KEM
M123A03BPB473%C	47000	50	F, J, K	C	1 or 2	KEM

M123A03BPB513%C	51000	50	F, J, K	C	1 or 2	KEM
M123A03BPB563%C	56000	50	F, J, K	C	1 or 2	KEM
M123A03BPB623%C	62000	50	F, J, K	C	1 or 2	KEM
M123A03BPB683%C	68000	50	F, J, K	C	1 or 2	KEM
M123A03BPB753%C	75000	50	F, J, K	C	1 or 2	KEM
	Capacitance	Rated	Capacitance	Termination		
Part Number	Value (pF)	Voltage (V)	Tolerance (%)	Finish (#)	Level	Manufacturer
M123A03BPB823%C	82000	50	F, J, K	C	1 or 2	KEM
M123A03BPB913%C	91000	50	F, J, K	C	1 or 2	KEM
M123A03BPB104%C	100000	50	F, J, K	C	1 or 2	KEM
M123A03BXC563KC	56000	100	K	C	1 or 2	KEM
M123A03BXC683KC	68000	100	K	C	1 or 2	KEM
M123A03BXC823KC	82000	100	K	C	1 or 2	KEM
M123A03BXC104KC	100000	100	K	C	1 or 2	KEM
M123A03BXC124KC	120000	100	K	C	1 or 2	KEM
M123A03BXC154KC	150000	100	K	C	1 or 2	KEM
M123A03BXC184KC	180000	100	K	C	1 or 2	KEM
M123A03BXC224KC	220000	100	K	C	1 or 2	KEM
M123A03BXC274KC	270000	100	K	C	1 or 2	KEM
M123A03BXC334KC	330000	100	K	C	1 or 2	KEM
M123A03BXC394KC	390000	100	K	C	1 or 2	KEM
M123A03BXC474KC	470000	100	K	C	1 or 2	KEM
M123A03BXB564KC	560000	50	K	C	1 or 2	KEM
M123A03BXB684KC	680000	50	K	C	1 or 2	KEM
M123A03BXB824KC	820000	50	K	C	1 or 2	KEM
M123A03BXB105KC	1000000	50	K	C	1 or 2	KEM
	Capacitance	Rated	Capacitance	Termination		
Part Number	Value (pF)	Voltage (V)	Tolerance (%)	Finish (#)	Level	Manufacturer

CKS11 Ceramic Capacitors

	Capacitance	Rated	Capacitance	Termination		
Part Number	Value (pF)	Voltage (V)	Tolerance (%)	Finish (#)	Level	Manufacturer
M123A04BPC4R7%W	4.7	100	C, D	W	1 or 2	AVX, KEM
M123A04BPC5R1%W	5.1	100	C, D	W	1 or 2	AVX, KEM
M123A04BPC6R2%W	6.2	100	C, D	W	1 or 2	AVX, KEM
M123A04BPC6R8%W	6.8	100	C, D	W	1 or 2	AVX, KEM
M123A04BPC7R5%W	7.5	100	C, D	W	1 or 2	AVX, KEM
M123A04BPC8R2%W	8.2	100	C, D	W	1 or 2	AVX, KEM
M123A04BPC9R1%W	9.1	100	C, D	W	1 or 2	AVX, KEM
M123A04BPC100%W	10	100	C, J, K	W	1 or 2	AVX, KEM
M123A04BPC110%W	11	100	C, J, K	W	1 or 2	AVX, KEM
M123A04BPC120%W	12	100	C, J, K	W	1 or 2	AVX, KEM
M123A04BPC130%W	13	100	C, J, K	W	1 or 2	AVX, KEM
M123A04BPC150%W	15	100	C, J, K	W	1 or 2	AVX, KEM

M123A04BPC160%W	16	100	C, J, K	W	1 or 2	AVX, KEM
M123A04BPC180%W	18	100	C, J, K	W	1 or 2	AVX, KEM
M123A04BPC200%W	20	100	C, J, K	W	1 or 2	AVX, KEM
M123A04BPC220%W	22	100	C, J, K	W	1 or 2	AVX, KEM
M123A04BPC240%W	24	100	C, J, K	W	1 or 2	AVX, KEM
M123A04BPC270%W	27	100	C, J, K	W	1 or 2	AVX, KEM
	Capacitance	Rated	Capacitance	Termination		
Part Number	Value (pF)	Voltage (V)	Tolerance (%)	Finish (#)	Level	Manufacturer
M123A04BPC300%W	30	100	C, J, K	W	1 or 2	AVX, KEM
M123A04BPC330%W	33	100	C, J, K	W	1 or 2	AVX, KEM
M123A04BPC360%W	36	100	C, J, K	W	1 or 2	AVX, KEM
M123A04BPC390%W	39	100	C, J, K	W	1 or 2	AVX, KEM
M123A04BPC430%W	43	100	C, J, K	W	1 or 2	AVX, KEM
M123A04BPC470%W	47	100	C, J, K	W	1 or 2	AVX, KEM
M123A04BPC510%W	51	100	C, J, K	W	1 or 2	AVX, KEM
M123A04BPC560%W	56	100	C, J, K	W	1 or 2	AVX, KEM
M123A04BPC620%W	62	100	C, J, K	W	1 or 2	AVX, KEM
M123A04BPC680%W	68	100	C, J, K	W	1 or 2	AVX, KEM
M123A04BPC750%W	75	100	C, J, K	W	1 or 2	AVX, KEM
M123A04BPC820%W	82	100	C, J, K	W	1 or 2	AVX, KEM
M123A04BPC910%W	91	100	C, J, K	W	1 or 2	AVX, KEM
M123A04BPC101%W	100	100	C, J, K	W	1 or 2	AVX, KEM
M123A04BPB111%W	110	50	F, J, K	W	1 or 2	AVX, KEM
M123A04BPB121%W	120	50	F, J, K	W	1 or 2	AVX, KEM
M123A04BPB131%W	130	50	F, J, K	W	1 or 2	AVX, KEM
M123A04BPB151%W	150	50	F, J, K	W	1 or 2	AVX, KEM
	Capacitance	Rated	Capacitance	Termination		
Part Number	Value (pF)	Voltage (V)	Tolerance (%)	Finish (#)	Level	Manufacturer
M123A04BPB161%W	160	50	F, J, K	W	1 or 2	AVX, KEM
M123A04BPB181%W	180	50	F, J, K	W	1 or 2	AVX, KEM
M123A04BPB201%W	200	50	F, J, K	W	1 or 2	AVX, KEM
M123A04BPB221%W	220	50	F, J, K	W	1 or 2	AVX, KEM
M123A04BPB241%W	240	50	F, J, K	W	1 or 2	AVX, KEM
M123A04BPB271%W	270	50	F, J, K	W	1 or 2	AVX, KEM
M123A04BPB301%W	300	50	F, J, K	W	1 or 2	AVX, KEM
M123A04BPB331%W	330	50	F, J, K	W	1 or 2	AVX, KEM
M123A04BPB361%W	360	50	F, J, K	W	1 or 2	AVX, KEM
M123A04BPB391%W	390	50	F, J, K	W	1 or 2	AVX, KEM
M123A04BPB431%W	430	50	F, J, K	W	1 or 2	AVX, KEM
M123A04BPB471%W	470	50	F, J, K	W	1 or 2	AVX, KEM
M123A04BPB511%W	510	50	F, J, K	W	1 or 2	AVX, KEM
M123A04BPB561%W	560	50	F, J, K	W	1 or 2	AVX, KEM
M123A04BXC101KW	100	100	K	W	1 or 2	AVX, KEM
M123A04BXC121KW	120	100	K	W	1 or 2	AVX, KEM
M123A04BXC151KW	150	100	K	W	1 or 2	AVX, KEM
M123A04BXC181KW	180	100	K	W	1 or 2	AVX, KEM
	Capacitance	Rated	Capacitance	Termination		

Part Number	Value (pF)	Voltage (V)	Tolerance (%)	Finish (#)	Level	Manufacturer
M123A04BXC221KW	220	100	K	W	1 or 2	AVX, KEM
M123A04BXC271KW	270	100	K	W	1 or 2	AVX, KEM
M123A04BXC331KW	330	100	K	W	1 or 2	AVX, KEM
M123A04BXC291KW	290	100	K	W	1 or 2	AVX, KEM
M123A04BXC471KW	470	100	K	W	1 or 2	AVX, KEM
M123A04BXC561KW	560	100	K	W	1 or 2	AVX, KEM
M123A04BXC681KW	680	100	K	W	1 or 2	AVX, KEM
M123A04BXC821KW	820	100	K	W	1 or 2	AVX, KEM
M123A04BXC102KW	1000	100	K	W	1 or 2	AVX, KEM
M123A04BXB122KW	1200	50	K	W	1 or 2	AVX, KEM
M123A04BXB152KW	1500	50	K	W	1 or 2	AVX, KEM
M123A04BXB182KW	1800	50	K	W	1 or 2	AVX, KEM
M123A04BXB222KW	2200	50	K	W	1 or 2	AVX, KEM
M123A04BXB272KW	2700	50	K	W	1 or 2	AVX, KEM
M123A04BXB332KW	3300	50	K	W	1 or 2	AVX, KEM
M123A04BXB392KW	3900	50	K	W	1 or 2	AVX, KEM
M123A04BXB472KW	4700	50	K	W	1 or 2	AVX, KEM
	Capacitance	Rated	Capacitance	Termination		
Part Number	Value (pF)	Voltage (V)	Tolerance (%)	Finish (#)	Level	Manufacturer

CKS12 Ceramic Capacitors

	Capacitance	Rated	Capacitance	Termination		
Part Number	Value (pF)	Voltage (V)	Tolerance (%)	Finish (#)	Level	Manufacturer
M123A05BPC111%W	110	100	F, J, K	W	1 or 2	AVX, KEM
M123A05BPC121%W	120	100	F, J, K	W	1 or 2	AVX, KEM
M123A05BPC131%W	130	100	F, J, K	W	1 or 2	AVX, KEM
M123A05BPC151%W	150	100	F, J, K	W	1 or 2	AVX, KEM
M123A05BPC161%W	160	100	F, J, K	W	1 or 2	AVX, KEM
M123A05BPC181%W	180	100	F, J, K	W	1 or 2	AVX, KEM
M123A05BPC201%W	200	100	F, J, K	W	1 or 2	AVX, KEM
M123A05BPC221%W	220	100	F, J, K	W	1 or 2	AVX, KEM
M123A05BPB241%W	240	50	F, J, K	W	1 or 2	AVX, KEM
M123A05BPB271%W	270	50	F, J, K	W	1 or 2	AVX, KEM
M123A05BPB301%W	300	50	F, J, K	W	1 or 2	AVX, KEM
M123A05BPB331%W	330	50	F, J, K	W	1 or 2	AVX, KEM
M123A05BPB361%W	360	50	F, J, K	W	1 or 2	AVX, KEM
M123A05BPB391%W	390	50	F, J, K	W	1 or 2	AVX, KEM
M123A05BPB431%W	430	50	F, J, K	W	1 or 2	AVX, KEM
M123A05BPB471%W	470	50	F, J, K	W	1 or 2	AVX, KEM
M123A05BXC122KW	1200	100	K	W	1 or 2	AVX, KEM
M123A05BXC152KW	1500	100	K	W	1 or 2	AVX, KEM
	Capacitance	Rated	Capacitance	Termination		
Part Number	Value (pF)	Voltage (V)	Tolerance (%)	Finish (#)	Level	Manufacturer

M123A05BXC182KW	1800	100	K	W	1 or 2	AVX, KEM
M123A05BXC222KW	2200	100	K	W	1 or 2	AVX, KEM
M123A05BXC272KW	2700	100	K	W	1 or 2	AVX, KEM
M123A05BXC332KW	3300	100	K	W	1 or 2	AVX, KEM
M123A05BXC392KW	3900	100	K	W	1 or 2	AVX, KEM
M123A05BXC472KW	4700	100	K	W	1 or 2	AVX, KEM
M123A05BXB562KW	5600	50	K	W	1 or 2	AVX, KEM
M123A05BXB682KW	6800	50	K	W	1 or 2	AVX, KEM
M123A05BXB822KW	8200	50	K	W	1 or 2	AVX, KEM
M123A05BXB103KW	10000	50	K	W	1 or 2	AVX, KEM
	Capacitance	Rated	Capacitance	Termination		
Part Number	Value (pF)	Voltage (V)	Tolerance (%)	Finish (#)	Level	Manufacturer

CKS14 Ceramic Capacitors

	Capacitance	Rated	Capacitance	Termination		
Part Number	Value (pF)	Voltage (V)	Tolerance (%)	Finish (#)	Level	Manufacturer
M123A06BPC241%W	240	100	F, J, K	W	1 or 2	AVX, KEM
M123A06BPC271%W	270	100	F, J, K	W	1 or 2	AVX, KEM
M123A06BPC301%W	300	100	F, J, K	W	1 or 2	AVX, KEM
M123A06BPC331%W	330	100	F, J, K	W	1 or 2	AVX, KEM
M123A06BPC361%W	360	100	F, J, K	W	1 or 2	AVX, KEM
M123A06BPC391%W	390	100	F, J, K	W	1 or 2	AVX, KEM
M123A06BPC431%W	430	100	F, J, K	W	1 or 2	AVX, KEM
M123A06BPC471%W	470	100	F, J, K	W	1 or 2	AVX, KEM
M123A06BPC511%W	510	100	F, J, K	W	1 or 2	AVX, KEM
M123A06BPC561%W	560	100	F, J, K	W	1 or 2	AVX, KEM
M123A06BPC621%W	620	100	F, J, K	W	1 or 2	AVX, KEM
M123A06BPC681%W	680	100	F, J, K	W	1 or 2	AVX, KEM
M123A06BPC751%W	750	100	F, J, K	W	1 or 2	AVX, KEM
M123A06BPC821%W	820	100	F, J, K	W	1 or 2	AVX, KEM
M123A06BPC911%W	910	100	F, J, K	W	1 or 2	AVX, KEM
M123A06BPC102%W	1000	100	F, J, K	W	1 or 2	AVX, KEM
M123A06BPB112%W	1100	50	F, J, K	W	1 or 2	AVX, KEM
M123A06BPB122%W	1200	50	F, J, K	W	1 or 2	AVX, KEM
	Capacitance	Rated	Capacitance	Termination		
Part Number	Value (pF)	Voltage (V)	Tolerance (%)	Finish (#)	Level	Manufacturer
M123A06BPB132%W	1300	50	F, J, K	W	1 or 2	AVX, KEM
M123A06BPB152%W	1500	50	F, J, K	W	1 or 2	AVX, KEM
M123A06BPB162%W	1600	50	F, J, K	W	1 or 2	AVX, KEM
M123A06BPB182%W	1800	50	F, J, K	W	1 or 2	AVX, KEM
M123A06BPB202%W	2000	50	F, J, K	W	1 or 2	AVX, KEM
M123A06BPB222%W	2200	50	F, J, K	W	1 or 2	AVX, KEM
M123A06BPB242%W	2400	50	F, J, K	W	1 or 2	AVX, KEM
M123A06BPB272%W	2700	50	F, J, K	W	1 or 2	AVX, KEM

M123A06BPB302%W	3000	50	F, J, K	W	1 or 2	AVX, KEM
M123A06BPB332%W	3300	50	F, J, K	W	1 or 2	AVX, KEM
M123A06BPB362%W	3600	50	F, J, K	W	1 or 2	AVX, KEM
M123A06BPB392%W	3900	50	F, J, K	W	1 or 2	AVX, KEM
M123A06BPB432%W	4300	50	F, J, K	W	1 or 2	AVX, KEM
M123A06BPB472%W	4700	50	F, J, K	W	1 or 2	AVX, KEM
M123A06BPB512%W	5100	50	F, J, K	W	1 or 2	AVX, KEM
M123A06BPB562%W	5600	50	F, J, K	W	1 or 2	AVX, KEM
M123A06BPB622%W	6200	50	F, J, K	W	1 or 2	AVX, KEM
M123A06BPB682%W	6800	50	F, J, K	W	1 or 2	AVX, KEM
	Capacitance	Rated	Capacitance	Termination		
Part Number	Value (pF)	Voltage (V)	Tolerance (%)	Finish (#)	Level	Manufacturer
M123A06BXC562KW	5600	100	K	W	1 or 2	AVX, KEM
M123A06BXC682KW	6800	100	K	W	1 or 2	AVX, KEM
M123A06BXC822KW	8200	100	K	W	1 or 2	AVX, KEM
M123A06BXC103KW	10000	100	K	W	1 or 2	AVX, KEM
M123A06BXB123KW	12000	50	K	W	1 or 2	AVX, KEM
M123A06BXB153KW	15000	50	K	W	1 or 2	AVX, KEM
M123A06BXB183KW	18000	50	K	W	1 or 2	AVX, KEM
M123A06BXB223KW	22000	50	K	W	1 or 2	AVX, KEM
M123A06BXB273KW	27000	50	K	W	1 or 2	AVX, KEM
M123A06BXB333KW	33000	50	K	W	1 or 2	AVX, KEM
M123A06BXB393KW	39000	50	K	W	1 or 2	AVX, KEM
M123A06BXB473KW	47000	50	K	W	1 or 2	AVX, KEM
	Capacitance	Rated	Capacitance	Termination		
Part Number	Value (pF)	Voltage (V)	Tolerance (%)	Finish (#)	Level	Manufacturer

CKS15 Ceramic Capacitors

	Capacitance	Rated	Capacitance	Termination		
Part Number	Value (pF)	Voltage (V)	Tolerance (%)	Finish (#)	Level	Manufacturer
M123A07BPC112%W	1100	100	F, J, K	W	1 or 2	AVX, KEM
M123A07BPC122%W	1200	100	F, J, K	W	1 or 2	AVX, KEM
M123A07BPC132%W	1300	100	F, J, K	W	1 or 2	AVX, KEM
M123A07BPC152%W	1500	100	F, J, K	W	1 or 2	AVX, KEM
M123A07BPC162%W	1600	100	F, J, K	W	1 or 2	AVX, KEM
M123A07BPC182%W	1800	100	F, J, K	W	1 or 2	AVX, KEM
M123A07BPC202%W	2000	100	F, J, K	W	1 or 2	AVX, KEM
M123A07BPC222%W	2200	100	F, J, K	W	1 or 2	AVX, KEM
M123A07BPB242%W	2400	50	F, J, K	W	1 or 2	AVX, KEM
M123A07BPB272%W	2700	50	F, J, K	W	1 or 2	AVX, KEM
M123A07BPB302%W	3000	50	F, J, K	W	1 or 2	AVX, KEM
M123A07BPB332%W	3300	50	F, J, K	W	1 or 2	AVX, KEM
M123A07BPB362%W	3600	50	F, J, K	W	1 or 2	AVX, KEM
M123A07BPB392%W	3900	50	F, J, K	W	1 or 2	AVX, KEM

M123A07BPB432%W	4300	50	F, J, K	W	1 or 2	AVX, KEM
M123A07BPB472%W	4700	50	F, J, K	W	1 or 2	AVX, KEM
M123A07BPB512%W	5100	50	F, J, K	W	1 or 2	AVX, KEM
M123A07BPB562%W	5600	50	F, J, K	W	1 or 2	AVX, KEM
	Capacitance	Rated	Capacitance	Termination		
Part Number	Value (pF)	Voltage (V)	Tolerance (%)	Finish (#)	Level	Manufacturer
M123A07BPB622%W	6200	50	F, J, K	W	1 or 2	AVX, KEM
M123A07BPB682%W	6800	50	F, J, K	W	1 or 2	AVX, KEM
M123A07BPB752%W	7500	50	F, J, K	W	1 or 2	AVX, KEM
M123A07BPB822%W	8200	50	F, J, K	W	1 or 2	AVX, KEM
M123A07BPB912%W	9100	50	F, J, K	W	1 or 2	AVX, KEM
M123A07BPB103%W	10000	50	F, J, K	W	1 or 2	AVX, KEM
M123A07BPB113%W	11000	50	F, J, K	W	1 or 2	AVX, KEM
M123A07BPB123%W	12000	50	F, J, K	W	1 or 2	AVX, KEM
M123A07BPB133%W	13000	50	F, J, K	W	1 or 2	AVX, KEM
M123A07BPB153%W	15000	50	F, J, K	W	1 or 2	AVX, KEM
M123A07BPB163%W	16000	50	F, J, K	W	1 or 2	AVX, KEM
M123A07BPB183%W	18000	50	F, J, K	W	1 or 2	AVX, KEM
M123A07BPB203%W	20000	50	F, J, K	W	1 or 2	AVX, KEM
M123A07BPB223%W	22000	50	F, J, K	W	1 or 2	AVX, KEM
M123A07BXC123KW	12000	100	K	W	1 or 2	AVX, KEM
M123A07BXC153KW	15000	100	K	W	1 or 2	AVX, KEM
M123A07BXC183KW	18000	100	K	W	1 or 2	AVX, KEM
M123A07BXC223KW	22000	100	K	W	1 or 2	AVX, KEM
	Capacitance	Rated	Capacitance	Termination		
Part Number	Value (pF)	Voltage (V)	Tolerance (%)	Finish (#)	Level	Manufacturer
M123A07BXC273KW	27000	100	K	W	1 or 2	AVX, KEM
M123A07BXC333KW	33000	100	K	W	1 or 2	AVX, KEM
M123A07BXC393KW	39000	100	K	W	1 or 2	AVX, KEM
M123A07BXC473KW	47000	100	K	W	1 or 2	AVX, KEM
M123A07BXC563KW	56000	100	K	W	1 or 2	AVX, KEM
M123A07BXC683KW	68000	100	K	W	1 or 2	AVX, KEM
M123A07BXC823KW	82000	100	K	W	1 or 2	AVX, KEM
M123A07BXC104KW	100000	100	K	W	1 or 2	AVX, KEM
M123A07BXB124KW	120000	50	K	W	1 or 2	AVX, KEM
M123A07BXB154KW	150000	50	K	W	1 or 2	AVX, KEM
M123A07BXB184KW	180000	50	K	W	1 or 2	AVX, KEM
	Capacitance	Rated	Capacitance	Termination		
Part Number	Value (pF)	Voltage (V)	Tolerance (%)	Finish (#)	Level	Manufacturer

CKS16 Ceramic Capacitors

	Capacitance	Rated	Capacitance	Termination		
Part Number	Value (pF)	Voltage (V)	Tolerance (%)	Finish (#)	Level	Manufacturer
M123A08BPC242%W	2400	100	F, J, K	W	1 or 2	AVX, KEM

M123A08BPC272%W	2700	100	F, J, K	W	1 or 2	AVX, KEM
M123A08BPC302%W	3000	100	F, J, K	W	1 or 2	AVX, KEM
M123A08BPC332%W	3300	100	F, J, K	W	1 or 2	AVX, KEM
M123A08BPC362%W	3600	100	F, J, K	W	1 or 2	AVX, KEM
M123A08BPC392%W	3900	100	F, J, K	W	1 or 2	AVX, KEM
M123A08BPC432%W	4300	100	F, J, K	W	1 or 2	AVX, KEM
M123A08BPC472%W	4700	100	F, J, K	W	1 or 2	AVX, KEM
M123A08BPC512%W	5100	100	F, J, K	W	1 or 2	AVX, KEM
M123A08BPC562%W	5600	100	F, J, K	W	1 or 2	AVX, KEM
M123A08BPC622%W	6200	100	F, J, K	W	1 or 2	AVX, KEM
M123A08BPC682%W	6800	100	F, J, K	W	1 or 2	AVX, KEM
M123A08BPC822%W	8200	100	F, J, K	W	1 or 2	AVX, KEM
M123A08BPC912%W	9100	100	F, J, K	W	1 or 2	AVX, KEM
M123A08BPC103%W	10000	100	F, J, K	W	1 or 2	AVX, KEM
M123A08BPB113%W	11000	50	F, J, K	W	1 or 2	AVX, KEM
M123A08BPB123%W	12000	50	F, J, K	W	1 or 2	AVX, KEM
M123A08BPB133%W	13000	50	F, J, K	W	1 or 2	AVX, KEM
	Capacitance	Rated	Capacitance	Termination		
Part Number	Value (pF)	Voltage (V)	Tolerance (%)	Finish (#)	Level	Manufacturer
M123A08BPB153%W	15000	50	F, J, K	W	1 or 2	AVX, KEM
M123A08BPB163%W	16000	50	F, J, K	W	1 or 2	AVX, KEM
M123A08BPB183%W	18000	50	F, J, K	W	1 or 2	AVX, KEM
M123A08BPB203%W	20000	50	F, J, K	W	1 or 2	AVX, KEM
M123A08BPB223%W	22000	50	F, J, K	W	1 or 2	AVX, KEM
M123A08BXC124KW	120000	100	K	W	1 or 2	AVX, KEM
M123A08BXC154KW	150000	100	K	W	1 or 2	AVX, KEM
M123A08BXC184KW	180000	100	K	W	1 or 2	AVX, KEM
M123A08BXC224KW	220000	100	K	W	1 or 2	AVX, KEM
M123A08BXC274KW	270000	100	K	W	1 or 2	AVX, KEM
M123A08BXC334KW	330000	100	K	W	1 or 2	AVX, KEM
M123A08BXC394KW	390000	100	K	W	1 or 2	AVX, KEM
M123A08BXC474KW	470000	100	K	W	1 or 2	AVX, KEM
M123A08BXB564KW	560000	50	K	W	1 or 2	AVX, KEM
M123A08BXB684KW	680000	50	K	W	1 or 2	AVX, KEM
M123A08BXB824KW	820000	50	K	W	1 or 2	AVX, KEM
M123A08BXB105KW	1000000	50	K	W	1 or 2	AVX, KEM
	Capacitance	Rated	Capacitance	Termination		
Part Number	Value (pF)	Voltage (V)	Tolerance (%)	Finish (#)	Level	Manufacturer

CKS22 Ceramic Capacitors

	Capacitance	Rated	Capacitance	Termination		
Part Number	Value (pF)	Voltage (V)	Tolerance (%)	Finish (#)	Level	Manufacturer
M123A16BPD1R0DC	1.0	200	D	C	1 or 2	AVX, KEM
M123A16BPD1R2DC	1.2	200	D	C	1 or 2	AVX, KEM

M123A16BPD1R5DC	1.5	200	D	C	1 or 2	AVX, KEM
M123A16BPD1R8DC	1.8	200	D	C	1 or 2	AVX, KEM
M123A16BPD2R2DC	2.2	200	D	C	1 or 2	AVX, KEM
M123A16BPD2R7DC	2.7	200	D	C	1 or 2	AVX, KEM
M123A16BPD3R3DC	3.3	200	D	C	1 or 2	AVX, KEM
M123A16BPD3R9DC	3.9	200	D	C	1 or 2	AVX, KEM
M123A16BPD4R7DC	4.7	200	D	C	1 or 2	AVX, KEM
M123A16BPD5R6DC	5.6	200	D	C	1 or 2	AVX, KEM
M123A16BPD6R8DC	6.8	200	D	C	1 or 2	AVX, KEM
M123A16BPD8R2DC	8.2	200	D	C	1 or 2	AVX, KEM
M123A16BPD100%C	10	200	D, J, K	C	1 or 2	AVX, KEM
M123A16BPD120%C	12	200	D, J, K	C	1 or 2	AVX, KEM
M123A16BPD150%C	15	200	D, J, K	C	1 or 2	AVX, KEM
M123A16BPD180%C	18	200	D, J, K	C	1 or 2	AVX, KEM
M123A16BPD220%C	22	200	D, J, K	C	1 or 2	AVX, KEM
M123A16BPD270%C	27	200	D, J, K	C	1 or 2	AVX, KEM
	Capacitance	Rated	Capacitance	Termination		
Part Number	Value (pF)	Voltage (V)	Tolerance (%)	Finish (#)	Level	Manufacturer
M123A16BPD330%C	33	200	D, J, K	C	1 or 2	AVX, KEM
M123A16BPD390%C	39	200	D, J, K	C	1 or 2	AVX, KEM
M123A16BPD470%C	47	200	D, J, K	C	1 or 2	AVX, KEM
M123A16BPD560%C	56	200	D, J, K	C	1 or 2	AVX, KEM
M123A16BPD680%C	68	200	F, J, K	C	1 or 2	AVX, KEM
M123A16BPD820%C	82	200	F, J, K	C	1 or 2	AVX, KEM
M123A16BPD101%C	100	200	F, J, K	C	1 or 2	AVX, KEM
M123A16BPD121%C	120	200	F, J, K	C	1 or 2	AVX, KEM
M123A16BPD151%C	150	200	F, J, K	C	1 or 2	AVX, KEM
M123A16BPD181%C	180	200	F, J, K	C	1 or 2	AVX, KEM
M123A16BPD221%C	220	200	F, J, K	C	1 or 2	AVX, KEM
M123A16BPD271%C	270	200	F, J, K	C	1 or 2	AVX, KEM
M123A16BPD331%C	330	200	F, J, K	C	1 or 2	AVX, KEM
M123A16BPD391%C	390	200	F, J, K	C	1 or 2	AVX, KEM
M123A16BPD471%C	470	200	F, J, K	C	1 or 2	AVX, KEM
M123A16BPD561%C	560	200	F, J, K	C	1 or 2	AVX, KEM
M123A16BPD681%C	680	200	F, J, K	C	1 or 2	AVX, KEM
M123A16BPD821%C	820	200	F, J, K	C	1 or 2	AVX, KEM
	Capacitance	Rated	Capacitance	Termination		
Part Number	Value (pF)	Voltage (V)	Tolerance (%)	Finish (#)	Level	Manufacturer
M123A16BPD102%C	1000	200	F, J, K	C	1 or 2	AVX, KEM
M123A16BPD122%C	1200	200	F, J, K	C	1 or 2	AVX, KEM
M123A16BPD152%C	1500	200	F, J, K	C	1 or 2	AVX, KEM
M123A16BPD182%C	1800	200	F, J, K	C	1 or 2	AVX, KEM
M123A16BPD222%C	2200	200	F, J, K	C	1 or 2	AVX, KEM
M123A16BPD272%C	2700	200	F, J, K	C	1 or 2	AVX, KEM
M123A16BPD332%C	3300	200	F, J, K	C	1 or 2	AVX, KEM
M123A16BPD392%C	3900	200	F, J, K	C	1 or 2	AVX, KEM
M123A16BPD472%C	4700	200	F, J, K	C	1 or 2	AVX, KEM

M123A16BXD271KC	270	200	K	C	1 or 2	AVX, KEM
M123A16BXD331KC	330	200	K	C	1 or 2	AVX, KEM
M123A16BXD391KC	390	200	K	C	1 or 2	AVX, KEM
M123A16BXD471KC	470	200	K	C	1 or 2	AVX, KEM
M123A16BXD561KC	560	200	K	C	1 or 2	AVX, KEM
M123A16BXD681KC	680	200	K	C	1 or 2	AVX, KEM
M123A16BXD821KC	820	200	K	C	1 or 2	AVX, KEM
M123A16BXC102KC	1000	100	K	C	1 or 2	AVX, KEM
M123A16BXC122KC	1200	100	K	C	1 or 2	AVX, KEM
	Capacitance	Rated	Capacitance	Termination		
Part Number	Value (pF)	Voltage (V)	Tolerance (%)	Finish (#)	Level	Manufacturer
M123A16BXC152KC	1500	100	K	C	1 or 2	AVX, KEM
M123A16BXC182KC	1800	100	K	C	1 or 2	AVX, KEM
M123A16BXC222KC	2200	100	K	C	1 or 2	AVX, KEM
M123A16BXC272KC	2700	100	K	C	1 or 2	AVX, KEM
M123A16BXC332KC	3300	100	K	C	1 or 2	AVX, KEM
M123A16BXC392KC	3900	100	K	C	1 or 2	AVX, KEM
M123A16BXC472KC	4700	100	K	C	1 or 2	AVX, KEM
M123A16BXC562KC	5600	100	K	C	1 or 2	AVX, KEM
M123A16BXC682KC	6800	100	K	C	1 or 2	AVX, KEM
M123A16BXC822KC	8200	100	K	C	1 or 2	AVX, KEM
M123A16BXC103KC	10000	100	K	C	1 or 2	AVX, KEM
M123A16BXB123KC	12000	50	K	C	1 or 2	AVX, KEM
M123A16BXB153KC	15000	50	K	C	1 or 2	AVX, KEM
M123A16BXB183KC	18000	50	K	C	1 or 2	AVX, KEM
M123A16BXB223KC	22000	50	K	C	1 or 2	AVX, KEM
M123A16BXB273KC	27000	50	K	C	1 or 2	AVX, KEM
M123A16BXB333KC	33000	50	K	C	1 or 2	AVX, KEM
M123A16BXB393KC	39000	50	K	C	1 or 2	AVX, KEM
	Capacitance	Rated	Capacitance	Termination		
Part Number	Value (pF)	Voltage (V)	Tolerance (%)	Finish (#)	Level	Manufacturer
M123A16BXB473KC	47000	50	K	C	1 or 2	AVX, KEM
M123A16BXB563KC	56000	50	K	C	1 or 2	AVX, KEM
M123A16BXB683KC	68000	50	K	C	1 or 2	AVX, KEM
M123A16BXB823KC	82000	50	K	C	1 or 2	AVX, KEM
M123A16BXB104KC	100000	50	K	C	1 or 2	AVX, KEM

CKS23 Ceramic Capacitors

	Capacitance	Rated	Capacitance	Termination		
Part Number	Value (pF)	Voltage (V)	Tolerance (%)	Finish (#)	Level	Manufacturer
M123A17BPD561%C	560	200	F, J, K	C	1 or 2	AVX, KEM
M123A17BPD681%C	680	200	F, J, K	C	1 or 2	AVX, KEM
M123A17BPD821%C	820	200	F, J, K	C	1 or 2	AVX, KEM
M123A17BPD102%C	1000	200	F, J, K	C	1 or 2	AVX, KEM

M123A17BPD122%C	1200	200	F, J, K	C	1 or 2	AVX, KEM
M123A17BPC272%C	2700	100	F, J, K	C	1 or 2	AVX, KEM
M123A17BPC332%C	3300	100	F, J, K	C	1 or 2	AVX, KEM
M123A17BPB472%C	4700	50	F, J, K	C	1 or 2	AVX, KEM
M123A17BPB562%C	5600	50	F, J, K	C	1 or 2	AVX, KEM
M123A17BPB682%C	6800	50	F, J, K	C	1 or 2	AVX, KEM
M123A17BPB822%C	8200	50	F, J, K	C	1 or 2	AVX, KEM
M123A17BPB103%C	10000	50	F, J, K	C	1 or 2	AVX, KEM
M123A17BXD102KC	1000	200	K	C	1 or 2	AVX, KEM
M123A17BXD122KC	1200	200	K	C	1 or 2	AVX, KEM
M123A17BXD152KC	1500	200	K	C	1 or 2	AVX, KEM
M123A17BXD182KC	1800	200	K	C	1 or 2	AVX, KEM
M123A17BXD222KC	2200	200	K	C	1 or 2	AVX, KEM
M123A17BXD272KC	2700	200	K	C	1 or 2	AVX, KEM
	Capacitance	Rated	Capacitance	Termination		
Part Number	Value (pF)	Voltage (V)	Tolerance (%)	Finish (#)	Level	Manufacturer
M123A17BXD332KC	3300	200	K	C	1 or 2	AVX, KEM
M123A17BXD392KC	3900	200	K	C	1 or 2	AVX, KEM
M123A17BXD472KC	4700	200	K	C	1 or 2	AVX, KEM
M123A17BXD562KC	5600	200	K	C	1 or 2	AVX, KEM
M123A17BXD682KC	6800	200	K	C	1 or 2	AVX, KEM
M123A17BXD822KC	8200	200	K	C	1 or 2	AVX, KEM
M123A17BXD103KC	10000	200	K	C	1 or 2	AVX, KEM
M123A17BXC123KC	12000	100	K	C	1 or 2	AVX, KEM
M123A17BXC153KC	15000	100	K	C	1 or 2	AVX, KEM
M123A17BXC183KC	18000	100	K	C	1 or 2	AVX, KEM
M123A17BXC223KC	22000	100	K	C	1 or 2	AVX, KEM
M123A17BXC273KC	27000	100	K	C	1 or 2	AVX, KEM
M123A17BXC333KC	33000	100	K	C	1 or 2	AVX, KEM
M123A17BXC393KC	39000	100	K	C	1 or 2	AVX, KEM
M123A17BXC473KC	47000	100	K	C	1 or 2	AVX, KEM
M123A17BXC563KC	56000	100	K	C	1 or 2	AVX, KEM
M123A17BXC683KC	68000	100	K	C	1 or 2	AVX, KEM
M123A17BXC823KC	82000	100	K	C	1 or 2	AVX, KEM
	Capacitance	Rated	Capacitance	Termination		
Part Number	Value (pF)	Voltage (V)	Tolerance (%)	Finish (#)	Level	Manufacturer
M123A17BXC104KC	100000	100	K	C	1 or 2	AVX, KEM
M123A17BXC124KC	120000	100	K	C	1 or 2	AVX, KEM
M123A17BXC154KC	150000	100	K	C	1 or 2	AVX, KEM
M123A17BXC184KC	180000	100	K	C	1 or 2	AVX, KEM
M123A17BXC224KC	220000	100	K	C	1 or 2	AVX, KEM
	Capacitance	Rated	Capacitance	Termination		
Part Number	Value (pF)	Voltage (V)	Tolerance (%)	Finish (#)	Level	Manufacturer

	Capacitance	Rated	Capacitance	Termination		
Part Number	Value (pF)	Voltage (V)	Tolerance (%)	Finish (#)	Level	Manufacturer
M123A18BRC124KC	120000	100	K	C	1 or 2	AVX, KEM
M123A18BRC154%C	150000	100	K, M	C	1 or 2	AVX, KEM
M123A18BRB184KC	180000	50	K	C	1 or 2	AVX, KEM
M123A18BRB224%C	220000	50	K, M	C	1 or 2	AVX, KEM
M123A18BRB274KC	270000	50	K	C	1 or 2	AVX, KEM
M123A18BRB334%C	330000	50	K, M	C	1 or 2	AVX, KEM
M123A18BRB394KC	390000	50	K	C	1 or 2	AVX, KEM
M123A18BRB474%C	470000	50	K, M	C	1 or 2	AVX, KEM

CKS51 Ceramic Capacitors

	Capacitance	Rated	Capacitance	Termination		
Part Number	Value (pF)	Voltage (V)	Tolerance (%)	Finish (#)	Level	Manufacturer
M123A10BPB1R0%#	1.0	50	C, D	M, G, S	1 or 2	AVX, KEM
M123A10BPB1R1%#	1.1	50	C, D	M, G, S	1 or 2	AVX, KEM
M123A10BPB1R2%#	1.2	50	C, D	M, G, S	1 or 2	AVX, KEM
M123A10BPB1R3%#	1.3	50	C, D	M, G, S	1 or 2	AVX, KEM
M123A10BPB1R5%#	1.5	50	C, D	M, G, S	1 or 2	AVX, KEM
M123A10BPB1R6%#	1.6	50	C, D	M, G, S	1 or 2	AVX, KEM
M123A10BPB1R8%#	1.8	50	C, D	M, G, S	1 or 2	AVX, KEM
M123A10BPB2R0%#	2.0	50	C, D	M, G, S	1 or 2	AVX, KEM
M123A10BPB2R2%#	2.2	50	C, D	M, G, S	1 or 2	AVX, KEM
M123A10BPB2R4%#	2.4	50	C, D	M, G, S	1 or 2	AVX, KEM
M123A10BPB2R7%#	2.7	50	C, D	M, G, S	1 or 2	AVX, KEM
M123A10BPB3R0%#	3.0	50	C, D	M, G, S	1 or 2	AVX, KEM
M123A10BPB3R3%#	3.3	50	C, D	M, G, S	1 or 2	AVX, KEM
M123A10BPB3R6%#	3.6	50	C, D	M, G, S	1 or 2	AVX, KEM
M123A10BPB3R9%#	3.9	50	C, D	M, G, S	1 or 2	AVX, KEM
M123A10BPB4R3%#	4.3	50	C, D	M, G, S	1 or 2	AVX, KEM
M123A10BPB4R7%#	4.7	50	C, D	M, G, S	1 or 2	AVX, KEM
M123A10BPB5R1%#	5.1	50	C, D	M, G, S	1 or 2	AVX, KEM
	Capacitance	Rated	Capacitance	Termination		
Part Number	Value (pF)	Voltage (V)	Tolerance (%)	Finish (#)	Level	Manufacturer
M123A10BPB5R6%#	5.6	50	C, D	M, G, S	1 or 2	AVX, KEM
M123A10BPB6R2%#	6.2	50	C, D	M, G, S	1 or 2	AVX, KEM
M123A10BPB6R8%#	6.8	50	C, D	M, G, S	1 or 2	AVX, KEM
M123A10BPB7R5%#	7.5	50	C, D	M, G, S	1 or 2	AVX, KEM
M123A10BPB8R2%#	8.2	50	C, D	M, G, S	1 or 2	AVX, KEM
M123A10BPB9R1%#	9.1	50	C, D	M, G, S	1 or 2	AVX, KEM
M123A10BPB100%#	10	50	C, J, K	M, G, S	1 or 2	AVX, KEM
M123A10BPB110%#	11	50	C, J, K	M, G, S	1 or 2	AVX, KEM
M123A10BPB120%#	12	50	C, J, K	M, G, S	1 or 2	AVX, KEM

M123A10BPB130%#	13	50	C, J, K	M, G, S	1 or 2	AVX, KEM
M123A10BPB150%#	15	50	C, J, K	M, G, S	1 or 2	AVX, KEM
M123A10BPB160%#	16	50	C, J, K	M, G, S	1 or 2	AVX, KEM
M123A10BPB180%#	18	50	C, J, K	M, G, S	1 or 2	AVX, KEM
M123A10BPB200%#	20	50	C, J, K	M, G, S	1 or 2	AVX, KEM
M123A10BPB220%#	22	50	C, J, K	M, G, S	1 or 2	AVX, KEM
M123A10BPB240%#	24	50	C, J, K	M, G, S	1 or 2	AVX, KEM
M123A10BPB270%#	27	50	F, J, K	M, G, S	1 or 2	AVX, KEM
M123A10BPB300%#	30	50	F, J, K	M, G, S	1 or 2	AVX, KEM
	Capacitance	Rated	Capacitance	Termination		
Part Number	Value (pF)	Voltage (V)	Tolerance (%)	Finish (#)	Level	Manufacturer
M123A10BPB330%#	33	50	F, J, K	M, G, S	1 or 2	AVX, KEM
M123A10BPB360%#	36	50	F, J, K	M, G, S	1 or 2	AVX, KEM
M123A10BPB390%#	39	50	F, J, K	M, G, S	1 or 2	AVX, KEM
M123A10BPB430%#	43	50	F, J, K	M, G, S	1 or 2	AVX, KEM
M123A10BPB470%#	47	50	F, J, K	M, G, S	1 or 2	AVX, KEM
M123A10BPB510%#	51	50	F, J, K	M, G, S	1 or 2	AVX, KEM
M123A10BPB560%#	56	50	F, J, K	M, G, S	1 or 2	AVX, KEM
M123A10BPB620%#	62	50	F, J, K	M, G, S	1 or 2	AVX, KEM
M123A10BPB680%#	68	50	F, J, K	M, G, S	1 or 2	AVX, KEM
M123A10BPB750%#	75	50	F, J, K	M, G, S	1 or 2	AVX, KEM
M123A10BPB820%#	82	50	F, J, K	M, G, S	1 or 2	AVX, KEM
M123A10BPB910%#	91	50	F, J, K	M, G, S	1 or 2	AVX, KEM
M123A10BPB101%#	100	50	F, J, K	M, G, S	1 or 2	AVX, KEM
M123A10BPB111%#	110	50	F, J, K	M, G, S	1 or 2	AVX, KEM
M123A10BPB121%#	120	50	F, J, K	M, G, S	1 or 2	AVX, KEM
M123A10BPB131%#	130	50	F, J, K	M, G, S	1 or 2	AVX, KEM
M123A10BPB151%#	150	50	F, J, K	M, G, S	1 or 2	AVX, KEM
M123A10BPB161%#	160	50	F, J, K	M, G, S	1 or 2	AVX, KEM
	Capacitance	Rated	Capacitance	Termination		
Part Number	Value (pF)	Voltage (V)	Tolerance (%)	Finish (#)	Level	Manufacturer
M123A10BPB181%#	180	50	F, J, K	M, G, S	1 or 2	AVX, KEM
M123A10BPB201%#	200	50	F, J, K	M, G, S	1 or 2	AVX, KEM
M123A10BPB221%#	220	50	F, J, K	M, G, S	1 or 2	AVX, KEM
M123A10BPB241%#	240	50	F, J, K	M, G, S	1 or 2	AVX, KEM
M123A10BPB271%#	270	50	F, J, K	M, G, S	1 or 2	AVX, KEM
M123A10BXB331K#	330	50	K	M, G, S	1 or 2	AVX, KEM, PRE
M123A10BXB391K#	390	50	K	M, G, S	1 or 2	AVX, KEM, PRE
M123A10BXB471K#	470	50	K	M, G, S	1 or 2	AVX, KEM, PRE
M123A10BXB561K#	560	50	K	M, G, S	1 or 2	AVX, KEM, PRE
M123A10BXB681K#	680	50	K	M, G, S	1 or 2	AVX, KEM, PRE
M123A10BXB821K#	820	50	K	M, G, S	1 or 2	AVX, KEM, PRE
M123A10BXB102K#	1000	50	K	M, G, S	1 or 2	AVX, KEM, PRE
M123A10BXB122K#	1200	50	K	M, G, S	1 or 2	AVX, KEM, PRE
M123A10BXB152K#	1500	50	K	M, G, S	1 or 2	AVX, KEM, PRE
M123A10BXB182K#	1800	50	K	M, G, S	1 or 2	AVX, KEM, PRE
M123A10BXB222K#	2200	50	K	M, G, S	1 or 2	AVX, KEM, PRE

M123A10BXB272K#	2700	50	K	M, G, S	1 or 2	AVX, KEM
M123A10BXB332K#	3300	50	K	M, G, S	1 or 2	AVX, KEM
M123A10BXB392K#	3900	50	K	M, G, S	1 or 2	AVX, KEM
M123A10BXB472K#	4700	50	K	M, G, S	1 or 2	AVX, KEM
	Capacitance	Rated	Capacitance	Termination		
Part Number	Value (pF)	Voltage (V)	Tolerance (%)	Finish (#)	Level	Manufacturer

CKS52 Ceramic Capacitors

	Capacitance	Rated	Capacitance	Termination		
Part Number	Value (pF)	Voltage (V)	Tolerance (%)	Finish (#)	Level	Manufacturer
M123A11BPB301%#	300	50	F, J, K	M, G, S	1 or 2	AVX, KEM
M123A11BPB331%#	330	50	F, J, K	M, G, S	1 or 2	AVX, KEM
M123A11BPB361%#	360	50	F, J, K	M, G, S	1 or 2	AVX, KEM
M123A11BPB391%#	390	50	F, J, K	M, G, S	1 or 2	AVX, KEM
M123A11BPB431%#	430	50	F, J, K	M, G, S	1 or 2	AVX, KEM
M123A11BPB471%#	470	50	F, J, K	M, G, S	1 or 2	AVX, KEM
M123A11BPB511%#	510	50	F, J, K	M, G, S	1 or 2	AVX, KEM
M123A11BPB561%#	560	50	F, J, K	M, G, S	1 or 2	AVX, KEM
M123A11BPB621%#	620	50	F, J, K	M, G, S	1 or 2	AVX, KEM
M123A11BPB681%#	680	50	F, J, K	M, G, S	1 or 2	AVX, KEM
M123A11BPB751%#	750	50	F, J, K	M, G, S	1 or 2	AVX, KEM
M123A11BPB821%#	820	50	F, J, K	M, G, S	1 or 2	AVX, KEM
M123A11BPB911%#	910	50	F, J, K	M, G, S	1 or 2	AVX, KEM
M123A11BPB102%#	1000	50	F, J, K	M, G, S	1 or 2	AVX, KEM
M123A11BXB562K#	5600	50	F, J, K	M, G, S	1 or 2	AVX, KEM
M123A11BXB682K#	6800	50	K	M, G, S	1 or 2	AVX, KEM
M123A11BXB822K#	8200	50	K	M, G, S	1 or 2	AVX, KEM
M123A11BXB103K#	10000	50	K	M, G, S	1 or 2	AVX, KEM
	Capacitance	Rated	Capacitance	Termination		
Part Number	Value (pF)	Voltage (V)	Tolerance (%)	Finish (#)	Level	Manufacturer
M123A11BXB123K#	12000	50	K	M, G, S	1 or 2	AVX, KEM
M123A11BXB153K#	15000	50	K	M, G, S	1 or 2	AVX, KEM
M123A11BXB183K#	18000	50	K	M, G, S	1 or 2	AVX, KEM
M123A11BXB223K#	22000	50	K	M, G, S	1 or 2	AVX, KEM
M123A11BXB273K#	27000	50	K	M, G, S	1 or 2	AVX, KEM
M123A11BXB333K#	33000	50	K	M, G, S	1 or 2	AVX, KEM
M123A11BXB473K#	47000	50	K	M, G, S	1 or 2	AVX, KEM
	Capacitance	Rated	Capacitance	Termination		
Part Number	Value (pF)	Voltage (V)	Tolerance (%)	Finish (#)	Level	Manufacturer

CKS53 Ceramic Capacitors

	Capacitance	Rated	Capacitance	Termination		

Part Number	Value (pF)	Voltage (V)	Tolerance (%)	Finish (#)	Level	Manufacturer
M123A12BPB301%#	300	50	F, J, K	M, G, S	1 or 2	AVX, KEM
M123A12BPB331%#	330	50	F, J, K	M, G, S	1 or 2	AVX, KEM
M123A12BPB361%#	360	50	F, J, K	M, G, S	1 or 2	AVX, KEM
M123A12BPB391%#	390	50	F, J, K	M, G, S	1 or 2	AVX, KEM
M123A12BPB431%#	430	50	F, J, K	M, G, S	1 or 2	AVX, KEM
M123A12BPB471%#	470	50	F, J, K	M, G, S	1 or 2	AVX, KEM
M123A12BPB511%#	510	50	F, J, K	M, G, S	1 or 2	AVX, KEM
M123A12BPB561%#	560	50	F, J, K	M, G, S	1 or 2	AVX, KEM
M123A12BPB621%#	620	50	F, J, K	M, G, S	1 or 2	AVX, KEM
M123A12BPB681%#	680	50	F, J, K	M, G, S	1 or 2	AVX, KEM
M123A12BPB751%#	750	50	F, J, K	M, G, S	1 or 2	AVX, KEM
M123A12BPB821%#	820	50	F, J, K	M, G, S	1 or 2	AVX, KEM
M123A12BPB911%#	910	50	F, J, K	M, G, S	1 or 2	AVX, KEM
M123A12BPB102%#	1000	50	F, J, K	M, G, S	1 or 2	AVX, KEM
M123A12BXB562K#	5600	50	K	M, G, S	1 or 2	AVX, KEM
M123A12BXB682K#	6800	50	K	M, G, S	1 or 2	AVX, KEM
M123A12BXB822K#	8200	50	K	M, G, S	1 or 2	AVX, KEM
M123A12BXB103K#	10000	50	K	M, G, S	1 or 2	AVX, KEM
	Capacitance	Rated	Capacitance	Termination		
Part Number	Value (pF)	Voltage (V)	Tolerance (%)	Finish (#)	Level	Manufacturer
M123A12BXB123K#	12000	50	K	M, G, S	1 or 2	AVX, KEM
M123A12BXB153K#	15000	50	K	M, G, S	1 or 2	AVX, KEM
M123A12BXB183K#	18000	50	K	M, G, S	1 or 2	AVX, KEM
M123A12BXB223K#	22000	50	K	M, G, S	1 or 2	AVX, KEM
M123A12BXB273K#	27000	50	K	M, G, S	1 or 2	AVX, KEM
M123A12BXB333K#	33000	50	K	M, G, S	1 or 2	AVX, KEM
M123A12BXB473K#	47000	50	K	M, G, S	1 or 2	AVX, KEM
M123A12BXB563K#	56000	50	K	M, G, S	1 or 2	AVX, KEM
M123A12BXB683K#	68000	50	K	M, G, S	1 or 2	AVX, KEM
M123A12BXB823K#	82000	50	K	M, G, S	1 or 2	AVX, KEM
M123A12BXB104K#	100000	50	K	M, G, S	1 or 2	AVX, KEM
	Capacitance	Rated	Capacitance	Termination		
Part Number	Value (pF)	Voltage (V)	Tolerance (%)	Finish (#)	Level	Manufacturer

CKS54 Ceramic Capacitors

	Capacitance	Rated	Capacitance	Termination		
Part Number	Value (pF)	Voltage (V)	Tolerance (%)	Finish (#)	Level	Manufacturer
M123A13BPB112%#	1100	50	F, J, K	S	1 or 2	AVX, KEM
M123A13BPB122%#	1200	50	F, J, K	S	1 or 2	AVX, KEM
M123A13BPB132%#	1300	50	F, J, K	S	1 or 2	AVX, KEM
M123A13BPB152%#	1500	50	F, J, K	S	1 or 2	AVX, KEM
M123A13BPB162%#	1600	50	F, J, K	S	1 or 2	AVX, KEM
M123A13BPB182%#	1800	50	F, J, K	S	1 or 2	AVX, KEM

M123A13BPB202%#	2000	50	F, J, K	S	1 or 2	AVX, KEM
M123A13BPB222%#	2200	50	F, J, K	S	1 or 2	AVX, KEM
M123A13BPB242%#	2400	50	F, J, K	S	1 or 2	AVX, KEM
M123A13BPB272%#	2700	50	F, J, K	S	1 or 2	AVX, KEM
M123A13BPB302%#	3000	50	F, J, K	S	1 or 2	AVX, KEM
M123A13BPB332%#	3300	50	F, J, K	S	1 or 2	AVX, KEM
M123A13BPB362%#	3600	50	F, J, K	S	1 or 2	AVX, KEM
M123A13BPB392%#	3900	50	F, J, K	S	1 or 2	AVX, KEM
M123A13BPB432%#	4300	50	F, J, K	S	1 or 2	AVX, KEM
M123A13BPB472%#	4700	50	F, J, K	S	1 or 2	AVX, KEM
M123A13BPB512%#	5100	50	F, J, K	S	1 or 2	AVX, KEM
M123A13BPB562%#	5600	50	F, J, K	S	1 or 2	AVX, KEM
	Capacitance	Rated	Capacitance	Termination		
Part Number	Value (pF)	Voltage (V)	Tolerance (%)	Finish (#)	Level	Manufacturer
M123A13BPB622%#	6200	50	F, J, K	S	1 or 2	AVX, KEM
M123A13BPB682%#	6800	50	F, J, K	S	1 or 2	AVX, KEM
M123A13BPB752%#	7500	50	F, J, K	S	1 or 2	AVX, KEM
M123A13BPB822%#	8200	50	F, J, K	S	1 or 2	AVX, KEM
M123A13BPB912%#	9100	50	F, J, K	S	1 or 2	AVX, KEM
M123A13BPB103%#	10000	50	F, J, K	S	1 or 2	AVX, KEM
M123A13BXB124K#	120000	50	K	S	1 or 2	AVX, KEM
M123A13BXB154K#	150000	50	K	S	1 or 2	AVX, KEM
M123A13BXB184K#	180000	50	K	S	1 or 2	AVX, KEM
M123A13BXB224K#	220000	50	K	S	1 or 2	AVX, KEM
M123A13BXB274K#	270000	50	K	S	1 or 2	AVX, KEM
M123A13BXB334K#	330000	50	K	S	1 or 2	AVX, KEM
M123A13BXB394K#	390000	50	K	S	1 or 2	AVX, KEM
M123A13BXB474K#	470000	50	K	S	1 or 2	AVX, KEM
	Capacitance	Rated	Capacitance	Termination		
Part Number	Value (pF)	Voltage (V)	Tolerance (%)	Finish (#)	Level	Manufacturer

Go to -
NEPP
|
NPSL
|
Capacitors
MIL-PRF-20, CAPACITORS
Fixed, Ceramic Dielectric, Temperature Compensating, Established Reliability
CCR Styles
Part Number/Ordering Explanation
Important! Application Notes
Revision History for MIL-PRF-20 Listing in the NPSL
Last Revision: 05/21/98

Click on the link below to see the associated parts selection listing:

Style	Detail Specification	Description (Click the Link Below for Dimensions)	Available Capacitance Range (Voltage)
CCR05	MIL-PRF-20/35	Rectangular, Radial Lead (0.190" x 0.190")	1 pF to 330 pF(200 V); 360 pF to 1,800 pF (100 V); 2,000 pF to 3,300 pF (50 V)
CCR06	MIL-PRF-20/36	Rectangular, Radial Lead (0.290" x 0.290")	360 pF to 1,800 pF (200 V); 2,000 pF to 4,700 pF (100 V); 5,100 pF to 10,000 pF (50 V)
CCR07	MIL-PRF-20/37	Rectangular, Radial Lead (0.480" x 0.480")	2,200 pF to 3,300 pF (200 V); 5,600 pF to 12,000 pF (100 V); 15,000 pF to 22,000 pF (50 V)
CCR08	MIL-PRF-20/38	Rectangular, Radial Lead (0.480" x 0.480")	3,900 pF to 4,700 pF (200 V); 15,000 pF to 18,000 pF (100 V); 56,000 pF to 68,000 pF (50 V)
CCR75	MIL-PRF-20/27	Tubular, Axial Lead (0.160" x 0.090")	1 pF to 68 pF (200 V); 82 pF to 220 pF (100 V); 270 pF to 680 pF (50 V)
CCR76	MIL-PRF-20/28	Tubular, Axial Lead (0.250" x 0.090")	82 pF to 120 pF (200 V); 270 pF to 390 pF (100 V); 750 pF to 1,000 pF (50 V)
CCR77	MIL-PRF-20/29	Tubular, Axial Lead (0.390" x 0.140")	150 pF to 680 pF (200 V); 750 pF to 2,200 pF (100 V); 2,400 pF to 5,600 pF (50 V)
CCR78	MIL-PRF-20/30	Tubular, Axial Lead (0.500" x 0.250")	820 pF to 3,300 pF (200 V); 3,900 pF to 12,000 pF (100 V); 15,000 pF to 27,000 pF (50 V)
CCR79	MIL-PRF-20/31	Tubular, Axial Lead (0.690" x 0.350")	3,900 pF to 10,000 pF (200 V); 15,000 pF to 39,000 pF (100 V); 47,000 pF to 82,000pF (50 V)

APPLICATION NOTES FOR MIL-PRF-20

1) MIL-PRF-123 capacitors are space grade and are recommended for all Level 1 applications.

2) As an alternative to MIL-PRF-123, for Level 1 applications at >= 10 Vdc, MIL-PRF-20, MIL-PRF-39014, or MIL-PRF-55681 capacitors can be used in accordance with the type, value and failure rate guidelines shown in the tables.

3) As an alternative to MIL-PRF-123, for Level 1 low voltage applications (< 10 Vdc), MIL-PRF-20, MIL-PRF-39014, or MIL-PRF-55681 capacitors can be used, if capacitor rated voltage is at least 100 Vdc and flight lots are subjected to lot sample testing per Group B Subgroup 2 of MIL-PRF-123 (Humidity, Steady-State, Low Voltage). These recommendations stem from concerns about the low voltage failure mechanism which has been observed to occur in multilayer ceramic capacitors. In low voltage applications, multilayer ceramic capacitors with thin dielectrics and/or large voids, delaminations, inclusions, microcracks and other defects, may develop low and unstable insulation resistances.

4) For Level 2 applications at >=10 Vdc, capacitors can be used in accordance with the type, value and failure rate guidelines shown in the tables.

5) For Level 2 low voltage applications (< 10 Vdc), capacitor rated voltage should be at least 100 Vdc. Alternatively, parts rated at less than 100 Vdc can be used if flight lots are subjected to lot sample testing per Group B Subgroup 2 of MIL-PRF-123 (Humidity, Steady-State, Low Voltage). These recommendations are prompted by low voltage failure concerns (see note 3).

Revision History for MIL-PRF-20 Listing in the NPSL

05/21/98	Added column to the "styles" page to show the available capacitance range and rated voltages for quick reference.
03/20/98	Added Dimensional Drawings to this Section
11/28/97	Made changes indicating the specification conversion to a performance specification (MIL-PRF-20 instead of MIL-C-20).
11/28/97	Added additional application note clarification with respect to the low voltage application of these capacitors.
05/01/97	Initial Release of MIL-C-20 Section in the NPSL

Part Number Ordering Information:

Example P/N:

CCR75CH1R0CS

where,

CCR	75	C	H
Style (fixed, ceramic dielectric, temp. compensating, established reliability capacitors conforming to MIL-PRF-20)	Shape and Dimensions of the capacitor	Nominal Temperature Coefficient (C = 0 ppm/deg.C)	Ap

Part number ordering options are developed using the following criteria:

Style	Detail Specification		Approximate Tolerance Envelope
CCR05	MIL-PRF-20/35		F = 0 +/- 15 ppm/deg.C
CCR06	MIL-PRF-20/36		G = 0 +/- 30 ppm/deg.C
CCR07	MIL-PRF-20/37		H = 0 +/- 60 ppm/deg.C
CCR08	MIL-PRF-20/38		J = 0 +/- 120 ppm/deg.C
CCR75	MIL-PRF-20/27		K = 0 +/- 250 ppm/deg.C
CCR76	MIL-PRF-20/28		X = not practically measurable
CCR77	MIL-PRF-20/29		
CCR78	MIL-PRF-20/30		
CCR79	MIL-PRF-20/31		

Capacitance Tolerance		Failure Rate Level
B = +/- 0.1 pF		P = 0.1%/1000 hrs (See Level 2)
C = +/- 0.25 pF		R = 0.01%/1000 hrs (See Level 2)
D = +/- 0.5 pF		S = 0.001%/1000 hrs (See Level 1)
F = +/- 1%		
G = +/- 2%		
J = +/- 5%		
K = +/- 10%		

Capacitance Values:

Capacitance values in picofarads (pF) are contained in the following listing. When ordering, the first two digits represent significant figures and the last digit specifies the number of zeroes to follow. For example 101 indicates 100 pF and 102 indicates 1000 pF. The letter "R" is used to indicate a decimal point when required. For example 1R0 indicates 1.0 pF.

CCR05 Ceramic Capacitors

	Capacitance	Rated	Capacitance	Level 1	Level 2	
Part Number	Value (pF)	Voltage (V)	Tolerance (%)	(FRL)(#)	(FRL)(#)	Manufacturer
CCR05CX1R0%#	1.0	200	B, C	S	P, R	AVX, KEM
CCR05CX1R1%#	1.1	200	B, C	S	P, R	AVX, KEM
CCR05CX1R2%#	1.2	200	B, C	S	P, R	AVX, KEM
CCR05CX1R3%#	1.3	200	B, C	S	P, R	AVX, KEM
CCR05CX1R5%#	1.5	200	B, C	S	P, R	AVX, KEM
CCR05CX1R6%#	1.6	200	B, C	S	P, R	AVX, KEM
CCR05CX1R8%#	1.8	200	B, C	S	P, R	AVX, KEM
CCR05CX2R0%#	2.0	200	B, C	S	P, R	AVX, KEM
CCR05CK2R2%#	2.2	200	B, C	S	P, R	AVX, KEM
CCR05CK2R4%#	2.4	200	B, C	S	P, R	AVX, KEM
CCR05CK2R7%#	2.7	200	B, C, D	S	P, R	AVX, KEM
CCR05CK3R0%#	3.0	200	B, C, D	S	P, R	AVX, KEM
CCR05CK3R3%#	3.3	200	B, C, D	S	P, R	AVX, KEM

CCR05CK3R6%#	3.6	200	B, C, D	S	P, R	AVX, KEM
CCR05CK3R9%#	3.9	200	B, C, D	S	P, R	AVX, KEM
CCR05CJ4R3%#	4.3	200	B, C, D	S	P, R	AVX, KEM
CCR05CJ4R7%#	4.7	200	B, C, D	S	P, R	AVX, KEM
CCR05CJ5R1%#	5.1	200	B, C, D	S	P, R	AVX, KEM
	Capacitance	Rated	Capacitance	Level 1	Level 2	
Part Number	Value (pF)	Voltage (V)	Tolerance (%)	(FRL)(#)	(FRL)(#)	Manufacturer
CCR05CJ5R6%#	5.6	200	B, C, D	S	P, R	AVX, KEM
CCR05CJ6R2%#	6.2	200	B, C, D	S	P, R	AVX, KEM
CCR05CJ6R8%#	6.8	200	B, C, D	S	P, R	AVX, KEM
CCR05CJ7R5%#	7.5	200	B, C, D	S	P, R	AVX, KEM
CCR05CH8R2%#	8.2	200	B, C, D	S	P, R	AVX, KEM
CCR05CH9R1%#	9.1	200	B, C, D	S	P, R	AVX, KEM
CCR05CH100%#	10	200	F, G, J	S	P, R	AVX, KEM
CCR05CH110%#	11	200	F, G, J	S	P, R	AVX, KEM
CCR05CH120%#	12	200	F, G, J	S	P, R	AVX, KEM
CCR05CH130%#	13	200	F, G, J	S	P, R	AVX, KEM
CCR05CH150%#	15	200	F, G, J	S	P, R	AVX, KEM
CCR05CH160%#	16	200	F, G, J	S	P, R	AVX, KEM
CCR05CH180%#	18	200	F, G, J	S	P, R	AVX, KEM
CCR05CG200%#	20	200	F, G, J	S	P, R	AVX, KEM
CCR05CG220%#	22	200	F, G, J	S	P, R	AVX, KEM
CCR05CG240%#	24	200	F, G, J	S	P, R	AVX, KEM
CCR05CG270%#	27	200	F, G, J	S	P, R	AVX, KEM
CCR05CG300%#	30	200	F, G, J	S	P, R	AVX, KEM
	Capacitance	Rated	Capacitance	Level 1	Level 2	
Part Number	Value (pF)	Voltage (V)	Tolerance (%)	(FRL)(#)	(FRL)(#)	Manufacturer
CCR05CG330%#	33	200	F, G, J	S	P, R	AVX, KEM
CCR05CG360%#	36	200	F, G, J	S	P, R	AVX, KEM
CCR05CG390%#	39	200	F, G, J	S	P, R	AVX, KEM
CCR05CG430%#	43	200	F, G, J	S	P, R	AVX, KEM
CCR05CG470%#	47	200	F, G, J	S	P, R	AVX, KEM
CCR05CG510%#	51	200	F, G, J	S	P, R	AVX, KEM
CCR05CG560%#	56	200	F, G, J	S	P, R	AVX, KEM
CCR05CG620%#	62	200	F, G, J	S	P, R	AVX, KEM
CCR05CG680%#	68	200	F, G, J	S	P, R	AVX, KEM
CCR05CG750%#	75	200	F, G, J	S	P, R	AVX, KEM
CCR05CG820%#	82	200	F, G, J	S	P, R	AVX, KEM
CCR05CG910%#	91	200	F, G, J	S	P, R	AVX, KEM
CCR05CG101%#	100	200	F, G, J	S	P, R	AVX, KEM
CCR05CG111%#	110	200	F, G, J	S	P, R	AVX, KEM
CCR05CG121%#	120	200	F, G, J	S	P, R	AVX, KEM
CCR05CG131%#	130	200	F, G, J	S	P, R	AVX, KEM
CCR05CG151%#	150	200	F, G, J	S	P, R	AVX, KEM
CCR05CG161%#	160	200	F, G, J	S	P, R	AVX, KEM
	Capacitance	Rated	Capacitance	Level 1	Level 2	
Part Number	Value (pF)	Voltage (V)	Tolerance (%)	(FRL)(#)	(FRL)(#)	Manufacturer

CCR05CG181%#	180	200	F, G, J	S	P, R	AVX, KEM
CCR05CG201%#	200	200	F, G, J	S	P, R	AVX, KEM
CCR05CG221%#	220	200	F, G, J	S	P, R	AVX, KEM
CCR05CG241%#	240	200	F, G, J	S	P, R	AVX, KEM
CCR05CG271%#	270	200	F, G, J	S	P, R	AVX, KEM
CCR05CG301%#	300	200	F, G, J	S	P, R	AVX, KEM
CCR05CG331%#	330	200	F, G, J	S	P, R	AVX, KEM
CCR05CG361%#	360	100	F, G, J	S	P, R	AVX, KEM
CCR05CG391%#	390	100	F, G, J	S	P, R	AVX, KEM
CCR05CG431%#	430	100	F, G, J	S	P, R	AVX, KEM
CCR05CG471%#	470	100	F, G, J	S	P, R	AVX, KEM
CCR05CG511%#	510	100	F, G, J	S	P, R	AVX, KEM
CCR05CG561%#	560	100	F, G, J	S	P, R	AVX, KEM
CCR05CG621%#	620	100	F, G, J	S	P, R	AVX, KEM
CCR05CG681%#	680	100	F, G, J	S	P, R	AVX, KEM
CCR05CG751%#	750	100	F, G, J	S	P, R	AVX, KEM
CCR05CG821%#	820	100	F, G, J	S	P, R	AVX, KEM
CCR05CG911%#	910	100	F, G, J	S	P, R	AVX, KEM
	Capacitance	Rated	Capacitance	Level 1	Level 2	
Part Number	Value (pF)	Voltage (V)	Tolerance (%)	(FRL)(#)	(FRL)(#)	Manufacturer
CCR05CG102%#	1000	100	F, G, J	S	P, R	AVX, KEM
CCR05CG112%#	1100	100	F, G, J	S	P, R	AVX, KEM
CCR05CG122%#	1200	100	F, G, J	S	P, R	AVX, KEM
CCR05CG132%#	1300	100	F, G, J	S	P, R	AVX, KEM
CCR05CG152%#	1500	100	F, G, J	S	P, R	AVX, KEM
CCR05CG162%#	1600	100	F, G, J	S	P, R	AVX, KEM
CCR05CG182%#	1800	100	F, G, J	S	P, R	AVX, KEM
CCR05CG202%#	2000	50	F, G, J	S	P, R	AVX, KEM
CCR05CG222%#	2200	50	F, G, J	S	P, R	AVX, KEM
CCR05CG242%#	2400	50	F, G, J	S	P, R	AVX, KEM
CCR05CG272%#	2700	50	F, G, J	S	P, R	AVX, KEM
CCR05CG302%#	3000	50	F, G, J	S	P, R	AVX, KEM
CCR05CG332%#	3300	50	F, G, J	S	P, R	AVX, KEM
	Capacitance	Rated	Capacitance	Level 1	Level 2	
Part Number	Value (pF)	Voltage (V)	Tolerance (%)	(FRL)(#)	(FRL)(#)	Manufacturer

CCR06 Ceramic Capacitors

	Capacitance	Rated	Capacitance	Level 1	Level 2	
Part Number	Value (pF)	Voltage (V)	Tolerance (%)	(FRL)(#)	(FRL)(#)	Manufacturer
CCR06CG361%#	360	200	F, G, J	S	P, R	AVX, KEM
CCR06CG391%#	390	200	F, G, J	S	P, R	AVX, KEM
CCR06CG431%#	430	200	F, G, J	S	P, R	AVX, KEM
CCR06CG471%#	470	200	F, G, J	S	P, R	AVX, KEM
CCR06CG511%#	510	200	F, G, J	S	P, R	AVX, KEM

CCR06CG561%#	560	200	F, G, J	S	P, R	AVX, KEM
CCR06CG621%#	620	200	F, G, J	S	P, R	AVX, KEM
CCR06CG681%#	680	200	F, G, J	S	P, R	AVX, KEM
CCR06CG751%#	750	200	F, G, J	S	P, R	AVX, KEM
CCR06CG821%#	820	200	F, G, J	S	P, R	AVX, KEM
CCR06CG911%#	910	200	F, G, J	S	P, R	AVX, KEM
CCR06CG102%#	1000	200	F, G, J	S	P, R	AVX, KEM
CCR06CG112%#	1100	200	F, G, J	S	P, R	AVX, KEM
CCR06CG122%#	1200	200	F, G, J	S	P, R	AVX, KEM
CCR06CG132%#	1300	200	F, G, J	S	P, R	AVX, KEM
CCR06CG152%#	1500	200	F, G, J	S	P, R	AVX, KEM
CCR06CG162%#	1600	200	F, G, J	S	P, R	AVX, KEM
CCR06CG182%#	1800	200	F, G, J	S	P, R	AVX, KEM
	Capacitance	Rated	Capacitance	Level 1	Level 2	
Part Number	Value (pF)	Voltage (V)	Tolerance (%)	(FRL)(#)	(FRL)(#)	Manufacturer
CCR06CG202%#	2000	100	F, G, J	S	P, R	AVX, KEM
CCR06CG222%#	2200	100	F, G, J	S	P, R	AVX, KEM
CCR06CG242%#	2400	100	F, G, J	S	P, R	AVX, KEM
CCR06CG272%#	2700	100	F, G, J	S	P, R	AVX, KEM
CCR06CG302%#	3000	100	F, G, J	S	P, R	AVX, KEM
CCR06CG332%#	3300	100	F, G, J	S	P, R	AVX, KEM
CCR06CG362%#	3600	100	F, G, J	S	P, R	AVX, KEM
CCR06CG392%#	3900	100	F, G, J	S	P, R	AVX, KEM
CCR06CG432%#	4300	100	F, G, J	S	P, R	AVX, KEM
CCR06CG472%#	4700	100	F, G, J	S	P, R	AVX, KEM
CCR06CG512%#	5100	50	F, G, J	S	P, R	AVX, KEM
CCR06CG562%#	5600	50	F, G, J	S	P, R	AVX, KEM
CCR06CG622%#	6200	50	F, G, J	S	P, R	AVX, KEM
CCR06CG682%#	6800	50	F, G, J	S	P, R	AVX, KEM
CCR06CG752%#	7500	50	F, G, J	S	P, R	AVX, KEM
CCR06CG822%#	8200	50	F, G, J	S	P, R	AVX, KEM
CCR06CG912%#	9100	50	F, G, J	S	P, R	AVX, KEM
CCR06CG103%#	10000	50	F, G, J	S	P, R	AVX, KEM
	Capacitance	Rated	Capacitance	Level 1	Level 2	
Part Number	Value (pF)	Voltage (V)	Tolerance (%)	(FRL)(#)	(FRL)(#)	Manufacturer

CCR07 Ceramic Capacitors

	Capacitance	Rated	Capacitance	Level 1	Level 2	
Part Number	Value (pF)	Voltage (V)	Tolerance (%)	(FRL)(#)	(FRL)(#)	Manufacturer
CCR07CG222%#	2200	200	F, G, J, K	S	P, R	AVX, KEM
CCR07CG272%#	2700	200	F, G, J, K	S	P, R	AVX, KEM
CCR07CG332%#	3300	200	F, G, J, K	S	P, R	AVX, KEM
CCR07CG562%#	5600	100	F, G, J, K	S	P, R	AVX, KEM
CCR07CG682%#	6800	100	F, G, J, K	S	P, R	AVX, KEM

CCR07CG822%#	8200	100	F, G, J, K	S	P, R	AVX, KEM
CCR07CG103%#	10000	100	F, G, J, K	S	P, R	AVX, KEM
CCR07CG123%#	12000	100	F, G, J, K	S	P, R	AVX, KEM
CCR07CG153%#	15000	50	F, G, J, K	S	P, R	AVX, KEM
CCR07CG183%#	18000	50	F, G, J, K	S	P, R	AVX, KEM
CCR07CG223%#	22000	50	F, G, J, K	S	P, R	AVX, KEM

CCR08 Ceramic Capacitors

	Capacitance	Rated	Capacitance	Level 1	Level 2	
Part Number	Value (pF)	Voltage (V)	Tolerance (%)	(FRL)(#)	(FRL)(#)	Manufacturer
CCR08CG392%#	3900	200	G, J, K	S	P, R	AVX, KEM
CCR08CG472%#	4700	200	G, J, K	S	P, R	AVX, KEM
CCR08CG153%#	15000	100	G, J, K	S	P, R	AVX, KEM
CCR08CG183%#	18000	100	G, J, K	S	P, R	AVX, KEM
CCR08CG563%#	56000	50	G, J, K	S	P, R	AVX, KEM
CCR08CG683%#	68000	50	G, J, K	S	P, R	AVX, KEM

CCR75 Ceramic Capacitors

	Capacitance	Rated	Capacitance	Level 1	Level 2	
Part Number	Value (pF)	Voltage (V)	Tolerance (%)	(FRL)(#)	(FRL)(#)	Manufacturer
CCR75CX1R0%#	1.0	200	B, C	S	P, R	AVX, KEM
CCR75CX1R1%#	1.1	200	B, C	S	P, R	AVX, KEM
CCR75CX1R2%#	1.2	200	B, C	S	P, R	AVX, KEM
CCR75CX1R3%#	1.3	200	B, C	S	P, R	AVX, KEM
CCR75CX1R5%#	1.5	200	B, C	S	P, R	AVX, KEM
CCR75CX1R6%#	1.6	200	B, C	S	P, R	AVX, KEM
CCR75CX1R8%#	1.8	200	B, C	S	P, R	AVX, KEM
CCR75CX2R0%#	2.0	200	B, C	S	P, R	AVX, KEM
CCR75CK2R2%#	2.2	200	B, C	S	P, R	AVX, KEM
CCR75CK2R4%#	2.4	200	B, C	S	P, R	AVX, KEM
CCR75CK2R7%#	2.7	200	B, C, D	S	P, R	AVX, KEM
CCR75CK3R0%#	3.0	200	B, C, D	S	P, R	AVX, KEM
CCR75CK3R3%#	3.3	200	B, C, D	S	P, R	AVX, KEM
CCR75CK3R6%#	3.6	200	B, C, D	S	P, R	AVX, KEM
CCR75CK3R9%#	3.9	200	B, C, D	S	P, R	AVX, KEM
CCR75CJ4R3%#	4.3	200	B, C, D	S	P, R	AVX, KEM
CCR75CJ4R7%#	4.7	200	B, C, D	S	P, R	AVX, KEM
CCR75CJ5R1%#	5.1	200	B, C, D	S	P, R	AVX, KEM
	Capacitance	Rated	Capacitance	Level 1	Level 2	
Part Number	Value (pF)	Voltage (V)	Tolerance (%)	(FRL)(#)	(FRL)(#)	Manufacturer
CCR75CJ5R6%#	5.6	200	B, C, D	S	P, R	AVX, KEM
CCR75CJ6R2%#	6.2	200	B, C, D	S	P, R	AVX, KEM

CCR75CJ6R8%#	6.8	200	B, C, D	S	P, R	AVX, KEM
CCR75CJ7R5%#	7.5	200	B, C, D	S	P, R	AVX, KEM
CCR75CH8R2%#	8.2	200	B, C, D	S	P, R	AVX, KEM
CCR75CH9R1%#	9.1	200	B, C, D	S	P, R	AVX, KEM
CCR75CH100%#	10	200	F, G, J	S	P, R	AVX, KEM
CCR75CH110%#	11	200	F, G, J	S	P, R	AVX, KEM
CCR75CH120%#	12	200	F, G, J	S	P, R	AVX, KEM
CCR75CH130%#	13	200	F, G, J	S	P, R	AVX, KEM
CCR75CH150%#	15	200	F, G, J	S	P, R	AVX, KEM
CCR75CH160%#	16	200	F, G, J	S	P, R	AVX, KEM
CCR75CH180%#	18	200	F, G, J	S	P, R	AVX, KEM
CCR75CG200%#	20	200	F, G, J	S	P, R	AVX, KEM
CCR75CG220%#	22	200	F, G, J	S	P, R	AVX, KEM
CCR75CG240%#	24	200	F, G, J	S	P, R	AVX, KEM
CCR75CG270%#	27	200	F, G, J	S	P, R	AVX, KEM
CCR75CG300%#	30	200	F, G, J	S	P, R	AVX, KEM
	Capacitance	Rated	Capacitance	Level 1	Level 2	
Part Number	Value (pF)	Voltage (V)	Tolerance (%)	(FRL)(#)	(FRL)(#)	Manufacturer
CCR75CG330%#	33	200	F, G, J	S	P, R	AVX, KEM
CCR75CG360%#	36	200	F, G, J	S	P, R	AVX, KEM
CCR75CG390%#	39	200	F, G, J	S	P, R	AVX, KEM
CCR75CG430%#	43	200	F, G, J	S	P, R	AVX, KEM
CCR75CG470%#	47	200	F, G, J	S	P, R	AVX, KEM
CCR75CG510%#	51	200	F, G, J	S	P, R	AVX, KEM
CCR75CG560%#	56	200	F, G, J	S	P, R	AVX, KEM
CCR75CG620%#	62	200	F, G, J	S	P, R	AVX, KEM
CCR75CG680%#	68	200	F, G, J	S	P, R	AVX, KEM
CCR75CG820%#	82	100	F, G, J	S	P, R	AVX, KEM
CCR75CG910%#	91	100	F, G, J	S	P, R	AVX, KEM
CCR75CG101%#	100	100	F, G, J	S	P, R	AVX, KEM
CCR75CG111%#	110	100	F, G, J	S	P, R	AVX, KEM
CCR75CG121%#	120	100	F, G, J	S	P, R	AVX, KEM
CCR75CG131%#	130	100	F, G, J	S	P, R	AVX, KEM
CCR75CG151%#	150	100	F, G, J	S	P, R	AVX, KEM
CCR75CG161%#	160	100	F, G, J	S	P, R	AVX, KEM
CCR75CG181%#	180	100	F, G, J	S	P, R	AVX, KEM
	Capacitance	Rated	Capacitance	Level 1	Level 2	
Part Number	Value (pF)	Voltage (V)	Tolerance (%)	(FRL)(#)	(FRL)(#)	Manufacturer
CCR75CG201%#	200	100	F, G, J	S	P, R	AVX, KEM
CCR75CG221%#	220	100	F, G, J	S	P, R	AVX, KEM
CCR75CG271%#	270	50	F, G, J	S	P, R	AVX, KEM
CCR75CG301%#	300	50	F, G, J	S	P, R	AVX, KEM
CCR75CG331%#	330	50	F, G, J	S	P, R	AVX, KEM
CCR75CG361%#	360	50	F, G, J	S	P, R	AVX, KEM
CCR75CG391%#	390	50	F, G, J	S	P, R	AVX, KEM
CCR75CG431%#	430	50	F, G, J	S	P, R	AVX, KEM
CCR75CG471%#	470	50	F, G, J	S	P, R	AVX, KEM

CCR75CG511%#	510	50	F, G, J	S	P, R	AVX, KEM
CCR75CG561%#	560	50	F, G, J	S	P, R	AVX, KEM
CCR75CG621%#	620	50	F, G, J	S	P, R	AVX, KEM
CCR75CG681%#	680	50	F, G, J	S	P, R	AVX, KEM
	Capacitance	Rated	Capacitance	Level 1	Level 2	
Part Number	Value (pF)	Voltage (V)	Tolerance (%)	(FRL)(#)	(FRL)(#)	Manufacturer

CCR76 Ceramic Capacitors

	Capacitance	Rated	Capacitance	Level 1	Level 2	
Part Number	Value (pF)	Voltage (V)	Tolerance (%)	(FRL)(#)	(FRL)(#)	Manufacturer
CCR76CG820%#	82	200	F, G, J	S	P, R	AVX, KEM
CCR76CG910%#	91	200	F, G, J	S	P, R	AVX, KEM
CCR76CG101%#	100	200	F, G, J	S	P, R	AVX, KEM
CCR76CG111%#	110	200	F, G, J	S	P, R	AVX, KEM
CCR76CG121%#	120	200	F, G, J	S	P, R	AVX, KEM
CCR76CG271%#	270	100	F, G, J	S	P, R	AVX, KEM
CCR76CG301%#	300	100	F, G, J	S	P, R	AVX, KEM
CCR76CG331%#	330	100	F, G, J	S	P, R	AVX, KEM
CCR76CG361%#	360	100	F, G, J	S	P, R	AVX, KEM
CCR76CG391%#	390	100	F, G, J	S	P, R	AVX, KEM
CCR76CG751%#	750	50	F, G, J	S	P, R	AVX, KEM
CCR76CG821%#	820	50	F, G, J	S	P, R	AVX, KEM
CCR76CG911%#	910	50	F, G, J	S	P, R	AVX, KEM
CCR76CG102%#	1000	50	F, G, J	S	P, R	AVX, KEM
	Capacitance	Rated	Capacitance	Level 1	Level 2	
Part Number	Value (pF)	Voltage (V)	Tolerance (%)	(FRL)(#)	(FRL)(#)	Manufacturer

CCR77 Ceramic Capacitors

	Capacitance	Rated	Capacitance	Level 1	Level 2	
Part Number	Value (pF)	Voltage (V)	Tolerance (%)	(FRL)(#)	(FRL)(#)	Manufacturer
CCR77CG151%#	150	200	F, G, J	S	P, R	AVX, KEM
CCR77CG161%#	160	200	F, G, J	S	P, R	AVX, KEM
CCR77CG181%#	180	200	F, G, J	S	P, R	AVX, KEM
CCR77CG201%#	200	200	F, G, J	S	P, R	AVX, KEM
CCR77CG221%#	220	200	F, G, J	S	P, R	AVX, KEM
CCR77CG241%#	240	200	F, G, J	S	P, R	AVX, KEM
CCR77CG271%#	270	200	F, G, J	S	P, R	AVX, KEM
CCR77CG301%#	300	200	F, G, J	S	P, R	AVX, KEM
CCR77CG331%#	330	200	F, G, J	S	P, R	AVX, KEM
CCR77CG361%#	360	200	F, G, J	S	P, R	AVX, KEM
CCR77CG391%#	390	200	F, G, J	S	P, R	AVX, KEM
CCR77CG431%#	430	200	F, G, J	S	P, R	AVX, KEM

CCR77CG471%#	470	200	F, G, J	S	P, R	AVX, KEM
CCR77CG511%#	510	200	F, G, J	S	P, R	AVX, KEM
CCR77CG561%#	560	200	F, G, J	S	P, R	AVX, KEM
CCR77CG621%#	620	200	F, G, J	S	P, R	AVX, KEM
CCR77CG681%#	680	200	F, G, J	S	P, R	AVX, KEM
CCR77CG751%#	750	100	F, G, J	S	P, R	AVX, KEM
	Capacitance	Rated	Capacitance	Level 1	Level 2	
Part Number	Value (pF)	Voltage (V)	Tolerance (%)	(FRL)(#)	(FRL)(#)	Manufacturer
CCR77CG821%#	820	100	F, G, J	S	P, R	AVX, KEM
CCR77CG911%#	910	100	F, G, J	S	P, R	AVX, KEM
CCR77CG102%#	1000	100	F, G, J	S	P, R	AVX, KEM
CCR77CG112%#	1100	100	F, G, J	S	P, R	AVX, KEM
CCR77CG122%#	1200	100	F, G, J	S	P, R	AVX, KEM
CCR77CG132%#	1300	100	F, G, J	S	P, R	AVX, KEM
CCR77CG152%#	1500	100	F, G, J	S	P, R	AVX, KEM
CCR77CG162%#	1600	100	F, G, J	S	P, R	AVX, KEM
CCR77CG182%#	1800	100	F, G, J	S	P, R	AVX, KEM
CCR77CG202%#	2000	100	F, G, J	S	P, R	AVX, KEM
CCR77CG222%#	2200	100	F, G, J	S	P, R	AVX, KEM
CCR77CG242%#	2400	50	F, G, J	S	P, R	AVX, KEM
CCR77CG272%#	2700	50	F, G, J	S	P, R	AVX, KEM
CCR77CG302%#	3000	50	F, G, J	S	P, R	AVX, KEM
CCR77CG332%#	3300	50	F, G, J	S	P, R	AVX, KEM
CCR77CG362%#	3600	50	F, G, J	S	P, R	AVX, KEM
CCR77CG392%#	3900	50	F, G, J	S	P, R	AVX, KEM
CCR77CG432%#	4300	50	F, G, J	S	P, R	AVX, KEM
CCR77CG472%#	4700	50	F, G, J	S	P, R	AVX, KEM
CCR77CG512%#	5100	50	F, G, J, K	S	P, R	AVX, KEM
CCR77CG562%#	5600	50	F, G, J, K	S	P, R	AVX, KEM
	Capacitance	Rated	Capacitance	Level 1	Level 2	
Part Number	Value (pF)	Voltage (V)	Tolerance (%)	(FRL)(#)	(FRL)(#)	Manufacturer

CCR78 Ceramic Capacitors

	Capacitance	Rated	Capacitance	Level 1	Level 2	
Part Number	Value (pF)	Voltage (V)	Tolerance (%)	(FRL)(#)	(FRL)(#)	Manufacturer
CCR78CG821%#	820	200	F, G, J, K	S	P, R	AVX, KEM
CCR78CG102%#	1000	200	F, G, J, K	S	P, R	AVX, KEM
CCR78CG122%#	1200	200	F, G, J, K	S	P, R	AVX, KEM
CCR78CG152%#	1500	200	F, G, J, K	S	P, R	AVX, KEM
CCR78CG182%#	1800	200	F, G, J, K	S	P, R	AVX, KEM
CCR78CG222%#	2200	200	F, G, J, K	S	P, R	AVX, KEM
CCR78CG272%#	2700	200	F, G, J, K	S	P, R	AVX, KEM
CCR78CG332%#	3300	200	F, G, J, K	S	P, R	AVX, KEM
CCR78CG392%#	3900	100	F, G, J, K	S	P, R	AVX, KEM

CCR78CG472%#	4700	100	F, G, J, K	S	P, R	AVX, KEM
CCR78CG562%#	5600	100	F, G, J, K	S	P, R	AVX, KEM
CCR78CG682%#	6800	100	F, G, J, K	S	P, R	AVX, KEM
CCR78CG822%#	8200	100	F, G, J, K	S	P, R	AVX, KEM
CCR78CG103%#	10000	100	F, G, J, K	S	P, R	AVX, KEM
CCR78CG123%#	12000	100	F, G, J, K	S	P, R	AVX, KEM
CCR78CG153%#	15000	50	F, G, J, K	S	P, R	AVX, KEM
CCR78CG183%#	18000	50	F, G, J, K	S	P, R	AVX, KEM
CCR78CG223%#	22000	50	F, G, J, K	S	P, R	AVX, KEM
CCR78CG273%#	27000	50	F, G, J, K	S	P, R	AVX, KEM
	Capacitance	Rated	Capacitance	Level 1	Level 2	
Part Number	Value (pF)	Voltage (V)	Tolerance (%)	(FRL)(#)	(FRL)(#)	Manufacturer

CCR79 Ceramic Capacitors

	Capacitance	Rated	Capacitance	Level 1	Level 2	
Part Number	Value (pF)	Voltage (V)	Tolerance (%)	(FRL)(#)	(FRL)(#)	Manufacturer
CCR79CG392%#	3900	200	F, G, J, K	S	P, R	AVX, KEM
CCR79CG472%#	4700	200	F, G, J, K	S	P, R	AVX, KEM
CCR79CG562%#	5600	200	F, G, J, K	S	P, R	AVX, KEM
CCR79CG682%#	6800	200	F, G, J, K	S	P, R	AVX, KEM
CCR79CG822%#	8200	200	F, G, J, K	S	P, R	AVX, KEM
CCR79CG103%#	10000	200	F, G, J, K	S	P, R	AVX, KEM
CCR79CG153%#	15000	100	F, G, J, K	S	P, R	AVX, KEM
CCR79CG183%#	18000	100	F, G, J, K	S	P, R	AVX, KEM
CCR79CG223%#	22000	100	F, G, J, K	S	P, R	AVX, KEM
CCR79CG273%#	27000	100	F, G, J, K	S	P, R	AVX, KEM
CCR79CG333%#	33000	100	F, G, J, K	S	P, R	AVX, KEM
CCR79CG393%#	39000	100	F, G, J, K	S	P, R	AVX, KEM
CCR79CG473%#	47000	50	F, G, J, K	S	P, R	AVX, KEM
CCR79CG563%#	56000	50	F, G, J, K	S	P, R	AVX, KEM
CCR79CG683%#	68000	50	F, G, J, K	S	P, R	AVX, KEM
CCR79CG823%#	82000	50	F, G, J, K	S	P, R	AVX, KEM
	Capacitance	Rated	Capacitance	Level 1	Level 2	
Part Number	Value (pF)	Voltage (V)	Tolerance (%)	(FRL)(#)	(FRL)(#)	Manufacturer

Physical Dimensions Table

Axial Lead Designs

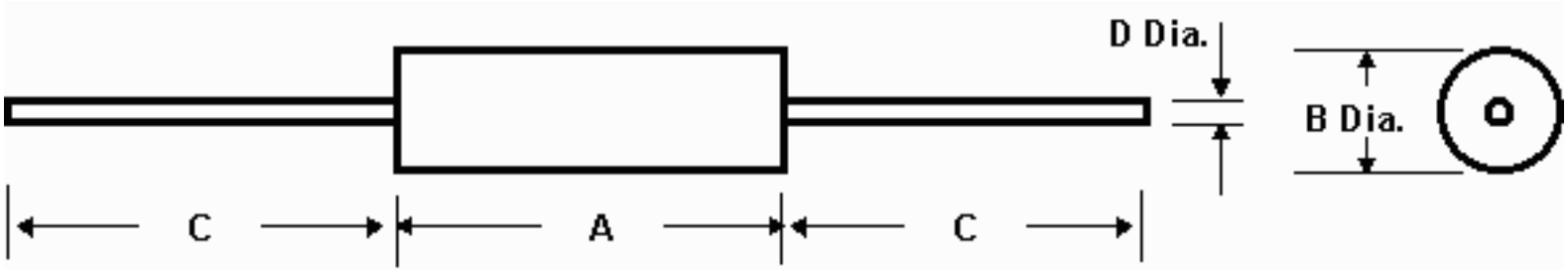

Capacitor Style	A	B	C	D
CCR75	0.160 +/- 0.010	0.090 +/- 0.010	1.250 min.	0.015 to 0.021
CCR76	0.250 +/- 0.010	0.090 +/- 0.010	1.250 min.	0.015 to 0.027
CCR77	0.390 +/- 0.010	0.140 +/- 0.010	1.250 min.	0.015 to 0.027
CCR78	0.500 +/- 0.020	0.250 +/- 0.010	1.250 min.	0.015 to 0.027
CCR79	0.690 +/- 0.010	0.350 +/- 0.010	1.250 min.	0.015 to 0.027

NOTES:

1. Dimensions are in inches.

Physical Dimensions Table

Radial Lead Designs

NOTES:

1. Dimensions are in inches.

CCR05 Style

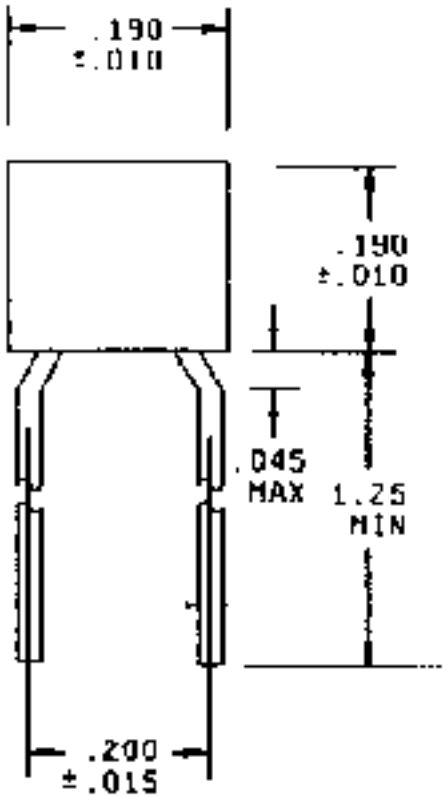

Lead Diameter: 0.023

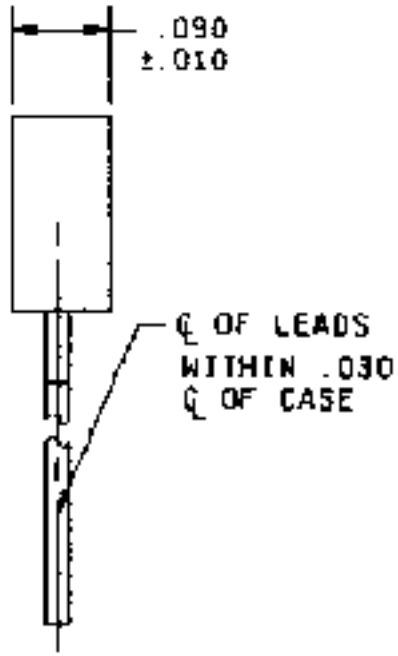

CCR06 Style

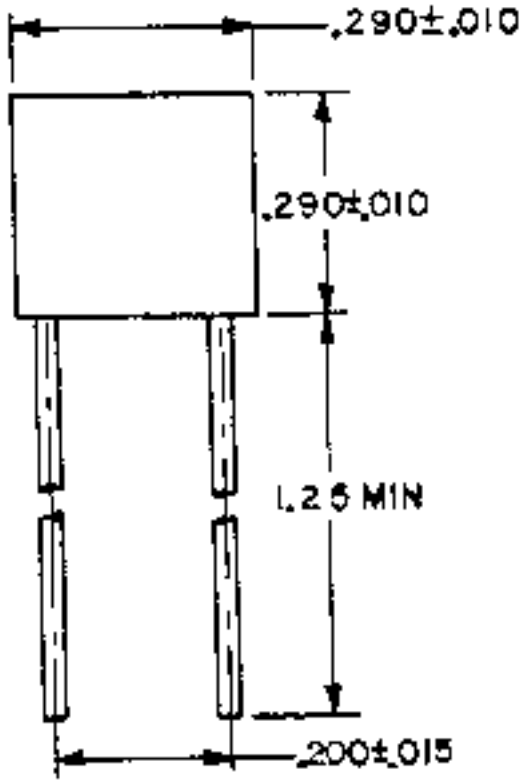

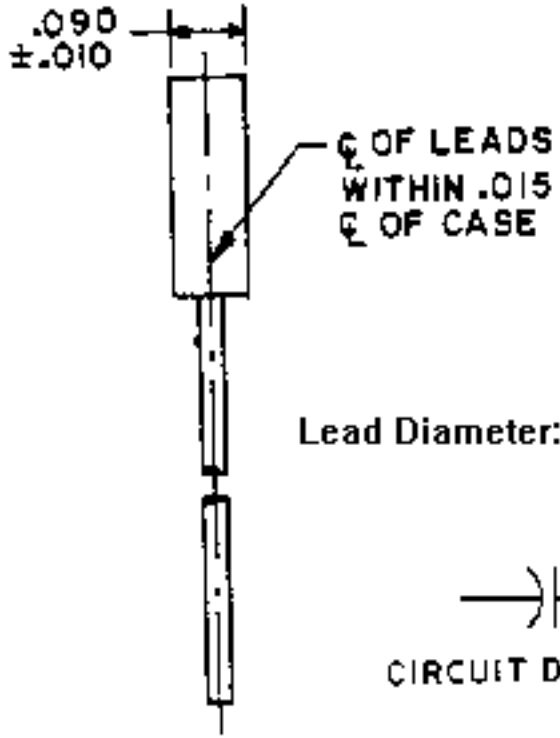

Lead Diameter: 0.023

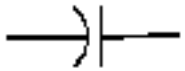

CIRCUIT DIAGRAM

CCR07 Style

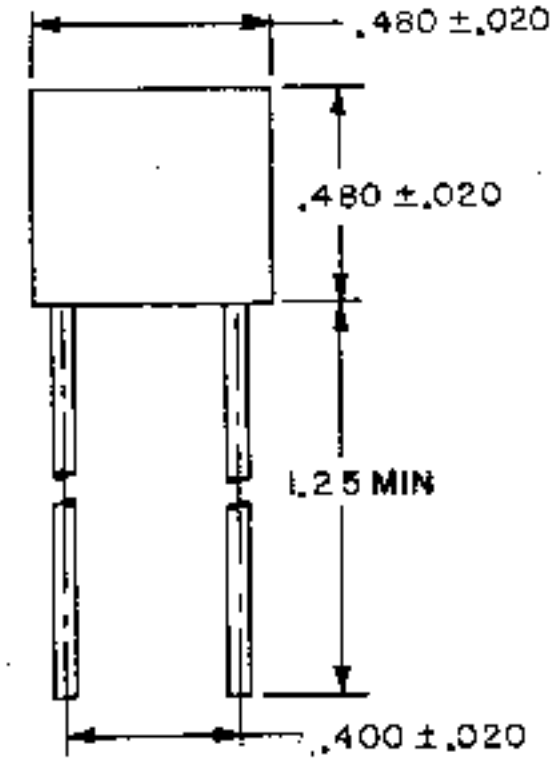

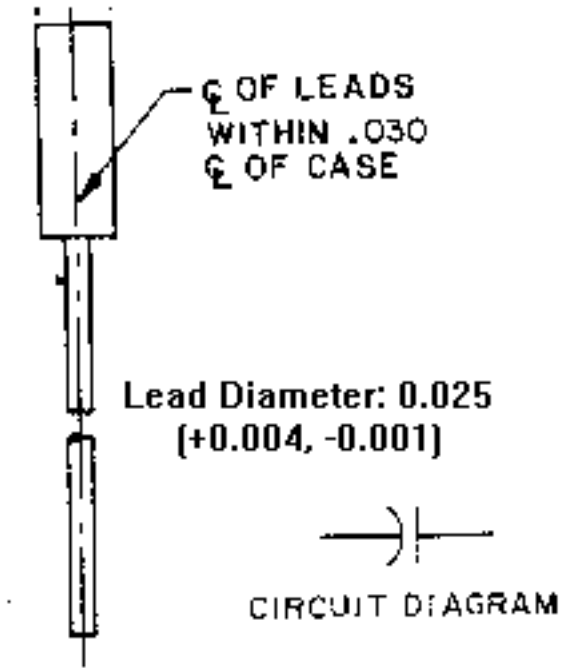

Thickness shall be 0.200 max for 0.1 uF and 0.140 ± 0.010 for all other values

CCR08 Style

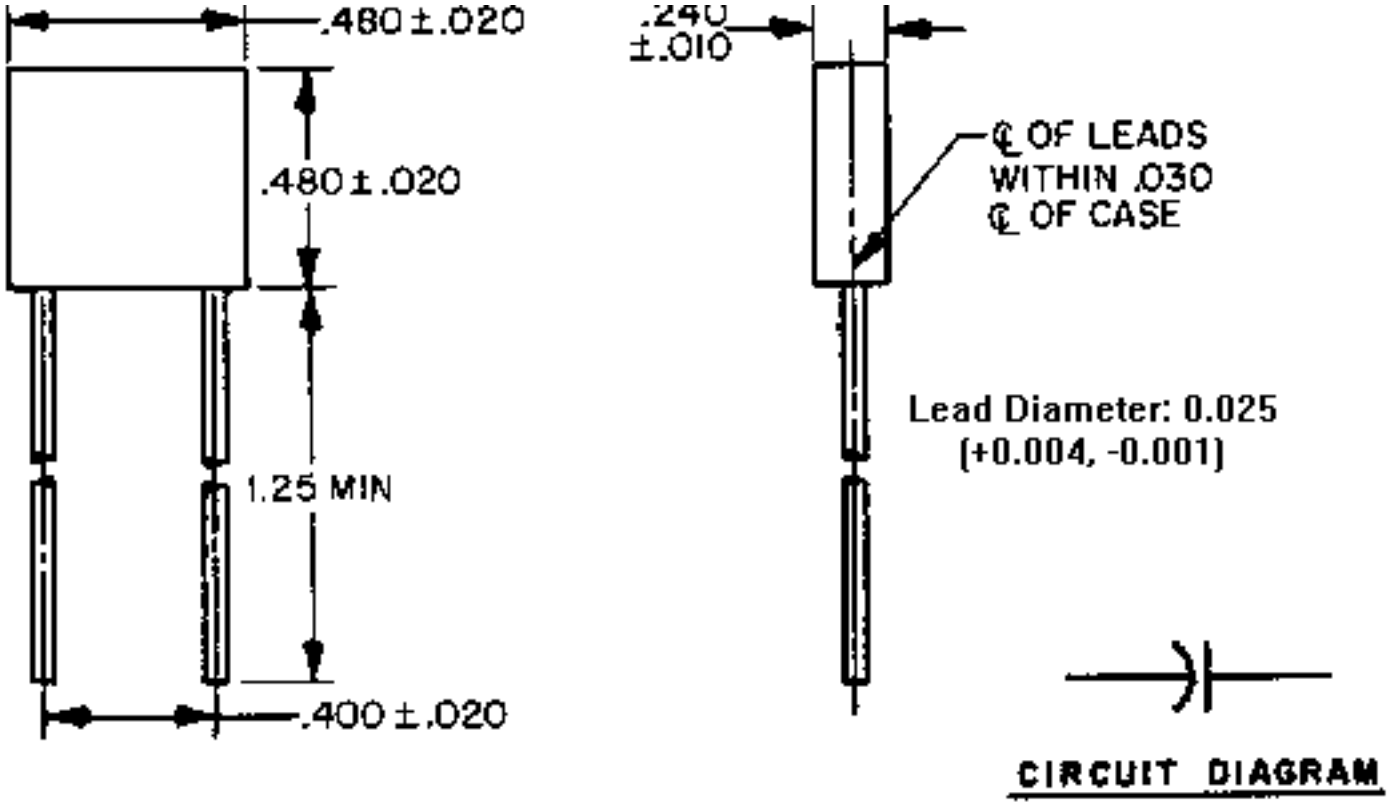

Physical Dimensions Table

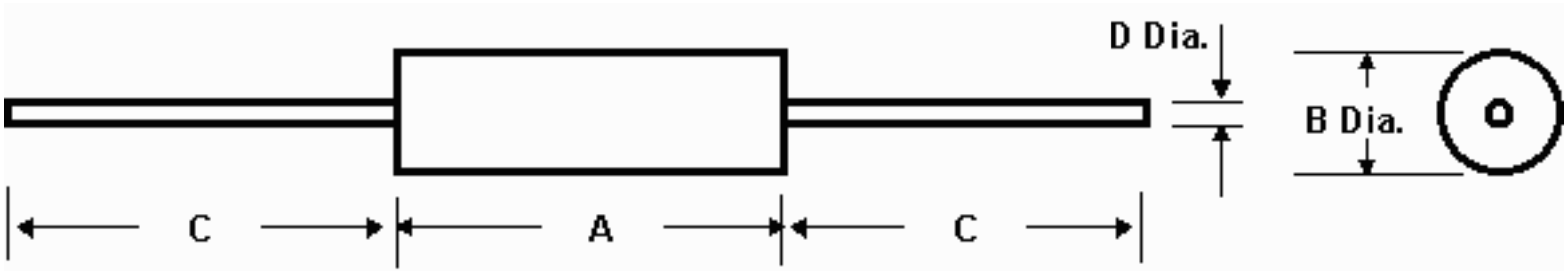

Capacitor Style	A	B	C	D
CCR75				
CCR76				
CCR77				
CCR78				
CCR79				

NOTES:

1. Dimensions are in inches.
2. Metric equivalents are given for general information only.
3. The maximum length is "clean lead" to "clean lead".
4. The end of the body shall be the point at which the body diameter equals the nearest drill size larger than 250% of the nominal lead diameter.
5. Lead length for new design and tape and reel packaging shall be 1.00" + 0.625", -0.0".
6. Lead concentric tolerance is to be measured at the point of lead egress from the resistor body.

Go to -

NEPP

|

NPSL

|

Capacitors

MIL-PRF-39014, CAPACITORS

Fixed, Ceramic Dielectric, Established Reliability

CKR Styles

Part Number/Ordering Explanation

Important! Application Notes

Revision History for MIL-PRF-39014 Listing in the NPSL

Last Updated 04/15/02

Click on the link below to see the associated parts selection listing:

Style	Detail Specification	Description (Click the Links Below for Dimensional Drawings)	Available Capacitance Range (Voltage)
CKR05	MIL-PRF-39014/1	Molded, Radial Lead	10 pF to 1,000 pF (200 V) 1,200 pF to 10,000 pF (100 V) 12,000 pF to 100,000 pF (50 V)
CKR06	MIL-PRF-39014/2	Molded, Radial Lead	1,200 pF to 10,000 pF (200 V) 12,000 pF to 100,000 pF (100 V) 120,000 pF to 470,000 pF (50 V)
CKR11	MIL-PRF-39014/5	Molded, Tubular, Axial Lead	10 pF to 4,700 pF (100 V) 5,600 pF to 10,000 pF (50 V)
CKR12	MIL-PRF-39014/5	Molded, Tubular, Axial Lead	5,600 pF to 10,000 pF (100 V) 11,000 pF to 47,000 pF (50 V)

CKR14	MIL-PRF-39014/5	Molded, Tubular, Axial Lead	12,000 pF to 47,000 pF (100 V) 56,000 pF to 100,000 pF (50 V)
CKR15	MIL-PRF-39014/5	Molded, Tubular, Axial Lead	56,000 pF to 470,000 pF (100 V)
CKR22	MIL-PRF-39014/22	Molded, 2 pin DIP	1 pF to 820 pF (200 V) 560 pF to 10,000 pF (100 V) 8,700 pF to 100,000 pF (50 V)
CKR23	MIL-PRF-39014/22	Molded, 2 pin DIP	560 pF to 10,000 pF (200 V) 2,700 pF to 100,000 pF (100 V) 4,700 pF to 220,000 pF (50 V)
CKR24	MIL-PRF-39014/22	Molded, 2 pin DIP	120,000 pF to 150,000 pF (100 V) 180,000 pF to 1,000,000 pF (50 V)

APPLICATION NOTES FOR MIL-PRF-39014

1) MIL-PRF-123 capacitors are space grade and are recommended for all Level 1 applications.

2) As an alternative to MIL-PRF-123, for Level 1 applications at >= 10 Vdc, MIL-PRF-20, MIL-PRF-39014, or MIL-PRF-55681 capacitors can be used in accordance with the type, value and failure rate guidelines shown in the tables.

3) As an alternative to MIL-PRF-123, for Level 1 low voltage applications (< 10 Vdc), MIL-PRF-20, MIL-PRF-39014, or MIL-PRF-55681 capacitors can be used, if capacitor rated voltage is at least 100 Vdc and flight lots are subjected to lot sample testing per Group B Subgroup 2 of MIL-PRF-123 (Humidity, Steady-State, Low Voltage). These recommendations stem from concerns about the low voltage failure mechanism which has been observed to occur in multilayer ceramic capacitors. In low voltage applications, multilayer ceramic capacitors with thin dielectrics and/or large voids, delaminations, inclusions, microcracks and other defects, may develop low and unstable insulation resistances.

4) For Level 2 applications at >=10 Vdc, capacitors can be used in accordance with the type, value and failure rate guidelines shown in the tables.

5) For Level 2 low voltage applications (< 10 Vdc), capacitor rated voltage should be at least 100 Vdc. Alternatively, parts rated at less than 100 Vdc can be used if flight lots are subjected to lot sample testing per Group B Subgroup 2 of MIL-PRF-123 (Humidity, Steady-State, Low Voltage). These recommendations are prompted by low voltage failure concerns (see note 3).

6) Values for MIL-PRF-39014/02, style CKR06 are limited to 0.47 uF maximum to avoid the use of parts with large areas of thin dielectric layers, that have been found to be particularly susceptible to the low voltage failure mechanism and also to exhibit decreased reliability at higher stress levels. In particular, the 1 uF, 50 V CKR06 capacitor (M39014/02-1419) is NOT recommended for flight applications due to the aggressive part construction designs employed that use very thin dielectric layers and a large number of electrodes. For applications that require a 1 uF, 50 V capacitor in this same package size, users are urged to consider the

MIL-PRF-123/2 CKS06

1 uF, 50 V capacitor. The MIL-PRF-123 specification is considered SPACE GRADE because of the part design and lot specific testing required by this high reliability specification.

Part Number Ordering Information, example and explanation:

M39014/01-1321 where,

M39014	/01	-1321
Military Specification Number	Detail Specification Number	Four-digit dash number which uniquely identifies the capacitance, tolerance, rated dc voltage, and failure rate level

Part number ordering options are developed using the following criteria:

Detail Specification:	Generic Designator	Description
MIL-PRF-39014/1	CKR05	Molded, Radial Leads
MIL-PRF-39014/2	CKR06	Molded, Radial Leads
MIL-PRF-39014/5	CKR11	Molded, Tubular, Axial Leads
MIL-PRF-39014/5	CKR12	Molded, Tubular, Axial Leads
MIL-PRF-39014/5	CKR14	Molded, Tubular, Axial Leads
MIL-PRF-39014/5	CKR15	Molded, Tubular, Axial Leads
MIL-PRF-39014/22	CKR22	Molded, 2 pin DIP
MIL-PRF-39014/22	CKR23	Molded, 2 pin DIP

MIL-PRF-39014/22	CKR24	Molded, 2 pin DIP

Failure Rate Levels:

S = 0.001%/1000 hours (

Level 2

)

Revision History for MIL-PRF-39014 Listing in the NPSL

04/15/02	Updated Application Note 6 regarding the exclusion of CKR06 capacitors above 1 uF in the NPSL. Update done to add a reference to the preferred CKS06 part made in accordance with MIL-PRF-123/2
05/21/98	Added column to the "styles" page to show the available capacitance range and rated voltages for quick reference. Corrected voltage rating for M39014/05-2254 to "50V" instead of "100V" Corrected
03/03/98	Added dimensional drawings to this section
02/03/98	Modified Application Note 6 to increase the maximum capacitance recommended for CKR06 parts from 0.33 uF to 0.47 uF Added comment to Note 6 regarding the extreme risk associated with the 1 uF, 50 V
11/28/97	Made changes indicating the specification conversion to a performance specification (MIL-PRF-39014 instead of MIL-C-39014) Added additional application note clarification with respect to the low v
05/01/97	Initial Release on MIL-C-39014 Section in the NPSL

CKR05 Ceramic Capacitors

	Cap	Rated	Cap.	Level 2	
Part Number	Value (pF)	Voltage (V)	Tol. (+/- %)	(FRL)	Manufacturer
M39014/01-1321	10	200	10	S	AVX, KEM
M39014/01-1322	10	200	20	S	AVX, KEM
M39014/01-1323	12	200	10	S	AVX, KEM
M39014/01-1324	15	200	10	S	AVX, KEM
M39014/01-1325	15	200	20	S	AVX, KEM
M39014/01-1326	18	200	10	S	AVX, KEM
M39014/01-1327	22	200	10	S	AVX, KEM
M39014/01-1328	22	200	20	S	AVX, KEM
M39014/01-1329	27	200	10	S	AVX, KEM
M39014/01-1330	33	200	10	S	AVX, KEM
M39014/01-1331	33	200	20	S	AVX, KEM
M39014/01-1332	39	200	10	S	AVX, KEM
M39014/01-1333	47	200	10	S	AVX, KEM
M39014/01-1334	47	200	20	S	AVX, KEM
M39014/01-1335	56	200	10	S	AVX, KEM
M39014/01-1336	68	200	10	S	AVX, KEM
M39014/01-1337	68	200	20	S	AVX, KEM
M39014/01-1338	82	200	10	S	AVX, KEM
	Cap	Rated	Cap.	Level 2	
Part Number	Value (pF)	Voltage (V)	Tol. (+/- %)	(FRL)	Manufacturer
M39014/01-1339	100	200	10	S	AVX, KEM
M39014/01-1340	100	200	20	S	AVX, KEM
M39014/01-1324	120	200	10	S	AVX, KEM
M39014/01-1342	150	200	10	S	AVX, KEM

M39014/01-1343	150	200	20	S	AVX, KEM
M39014/01-1344	180	200	10	S	AVX, KEM
M39014/01-1345	220	200	10	S	AVX, KEM
M39014/01-1346	220	200	20	S	AVX, KEM
M39014/01-1347	270	200	10	S	AVX, KEM
M39014/01-1348	330	200	10	S	AVX, KEM
M39014/01-1349	330	200	20	S	AVX, KEM
M39014/01-1350	390	200	10	S	AVX, KEM
M39014/01-1351	470	200	10	S	AVX, KEM
M39014/01-1352	470	200	20	S	AVX, KEM
M39014/01-1353	560	200	10	S	AVX, KEM
M39014/01-1354	680	200	10	S	AVX, KEM
M39014/01-1355	680	200	20	S	AVX, KEM
M39014/01-1356	820	200	10	S	AVX, KEM
	Cap	Rated	Cap.	Level 2	
Part Number	Value (pF)	Voltage (V)	Tol. (+/- %)	(FRL)	Manufacturer
M39014/01-1357	1000	200	10	S	AVX, KEM
M39014/01-1358	1000	200	20	S	AVX, KEM
M39014/01-1359	1200	100	10	S	AVX, KEM
M39014/01-1360	1500	100	10	S	AVX, KEM
M39014/01-1561	1500	100	20	S	AVX, KEM
M39014/01-1562	1800	100	10	S	AVX, KEM
M39014/01-1563	2200	100	10	S	AVX, KEM
M39014/01-1564	2200	100	20	S	AVX, KEM
M39014/01-1565	2700	100	10	S	AVX, KEM
M39014/01-1566	3300	100	10	S	AVX, KEM
M39014/01-1567	3300	100	20	S	AVX, KEM
M39014/01-1568	3900	100	10	S	AVX, KEM
M39014/01-1569	4700	100	10	S	AVX, KEM
M39014/01-1570	4700	100	20	S	AVX, KEM
M39014/01-1571	5600	100	10	S	AVX, KEM
M39014/01-1572	6800	100	10	S	AVX, KEM
M39014/01-1573	6800	100	20	S	AVX, KEM
M39014/01-1574	8200	100	10	S	AVX, KEM
	Cap	Rated	Cap.	Level 2	
Part Number	Value (pF)	Voltage (V)	Tol. (+/- %)	(FRL)	Manufacturer
M39014/01-1575	10000	100	10	S	AVX, KEM
M39014/01-1576	10000	100	20	S	AVX, KEM
M39014/01-1577	12000	50	10	S	AVX, KEM
M39014/01-1578	15000	50	10	S	AVX, KEM
M39014/01-1579	15000	50	20	S	AVX, KEM
M39014/01-1580	18000	50	10	S	AVX, KEM
M39014/01-1581	22000	50	10	S	AVX, KEM
M39014/01-1582	22000	50	20	S	AVX, KEM
M39014/01-1583	27000	50	10	S	AVX, KEM
M39014/01-1584	33000	50	10	S	AVX, KEM
M39014/01-1585	33000	50	20	S	AVX, KEM

M39014/01-1586	39000	50	10	S	AVX, KEM
M39014/01-1587	47000	50	10	S	AVX, KEM
M39014/01-1588	47000	50	20	S	AVX, KEM
M39014/01-1589	56000	50	10	S	AVX, KEM
M39014/01-1590	68000	50	10	S	AVX, KEM
M39014/01-1591	68000	50	20	S	AVX, KEM
M39014/01-1592	82000	50	10	S	AVX, KEM
	Cap	Rated	Cap.	Level 2	
Part Number	Value (pF)	Voltage (V)	Tol. (+/- %)	(FRL)	Manufacturer
M39014/01-1593	100000	50	10	S	AVX, KEM
M39014/01-1594	100000	50	20	S	AVX, KEM

CKR06 Ceramic Capacitors

	Cap	Rated	Cap.	Level 2	
Part Number	Value (pF)	Voltage (V)	Tol. (+/- %)	(FRL)	Manufacturer
M39014/02-1321	1200	200	10	S	AVX, KEM
M39014/02-1322	1500	200	10	S	AVX, KEM
M39014/02-1323	1500	200	20	S	AVX, KEM
M39014/02-1326	2200	200	10	S	AVX, KEM
M39014/02-1327	2200	200	20	S	AVX, KEM
M39014/02-1328	2700	200	10	S	AVX, KEM
M39014/02-1329	3300	200	10	S	AVX, KEM
M39014/02-1330	3300	200	20	S	AVX, KEM
M39014/02-1331	3900	200	10	S	AVX, KEM
M39014/02-1332	4700	200	10	S	AVX, KEM
M39014/02-1333	4700	200	20	S	AVX, KEM
M39014/02-1334	5600	200	10	S	AVX, KEM
M39014/02-1335	6800	200	10	S	AVX, KEM
M39014/02-1336	6800	200	20	S	AVX, KEM
M39014/02-1337	8200	200	10	S	AVX, KEM
M39014/02-1338	10000	200	10	S	AVX, KEM
M39014/02-1339	10000	200	10	S	AVX, KEM
M39014/02-1351	12000	100	10	S	AVX, KEM
	Cap	Rated	Cap.	Level 2	
Part Number	Value (pF)	Voltage (V)	Tol. (+/- %)	(FRL)	Manufacturer
M39014/02-1340	15000	100	10	S	AVX, KEM
M39014/02-1341	18000	100	10	S	AVX, KEM
M39014/02-1342	22000	100	10	S	AVX, KEM
M39014/02-1352	27000	100	10	S	AVX, KEM
M39014/02-1343	33000	100	10	S	AVX, KEM
M39014/02-1344	39000	100	10	S	AVX, KEM
M39014/02-1345	47000	100	10	S	AVX, KEM
M39014/02-1346	56000	100	10	S	AVX, KEM
M39014/02-1347	68000	100	10	S	AVX, KEM

M39014/02-1349	82000	100	10	S	AVX, KEM
M39014/02-1350	100000	100	10	S	AVX, KEM
M39014/02-1353	120000	50	10	S	AVX, KEM
M39014/02-1354	150000	50	10	S	AVX, KEM
M39014/02-1355	180000	50	10	S	AVX, KEM
M39014/02-1356	220000	50	10	S	AVX, KEM
M39014/02-1357	270000	50	10	S	AVX, KEM
M39014/02-1358	330000	50	10	S	AVX, KEM
M39014/02-1359	390000	50	10	S	AVX, KEM
M39014/02-1360	470000	50	10	S	AVX, KEM
	Cap	Rated	Cap.	Level 2	
Part Number	Value (pF)	Voltage (V)	Tol. (+/- %)	(FRL)	Manufacturer

CKR11 Ceramic Capacitors

	Cap	Rated	Cap.	Level 2	
Part Number	Value (pF)	Voltage (V)	Tol. (+/- %)	(FRL)	Manufacturer
M39014/05-2201	10	100	10	S	AVX, KEM
M39014/05-2202	10	100	20	S	AVX, KEM
M39014/05-2203	12	100	10	S	AVX, KEM
M39014/05-2204	15	100	10	S	AVX, KEM
M39014/05-2205	15	100	20	S	AVX, KEM
M39014/05-2204	18	100	10	S	AVX, KEM
M39014/05-2207	22	100	10	S	AVX, KEM
M39014/05-2208	22	100	20	S	AVX, KEM
M39014/05-2209	27	100	10	S	AVX, KEM
M39014/05-2210	33	100	10	S	AVX, KEM
M39014/05-2211	33	100	20	S	AVX, KEM
M39014/05-2212	39	100	10	S	AVX, KEM
M39014/05-2213	47	100	10	S	AVX, KEM
M39014/05-2214	47	100	20	S	AVX, KEM
M39014/05-2215	56	100	10	S	AVX, KEM
M39014/05-2216	68	100	10	S	AVX, KEM
	Cap	Rated	Cap.	Level 2	
Part Number	Value (pF)	Voltage (V)	Tol. (+/- %)	(FRL)	Manufacturer
M39014/05-2217	68	100	20	S	AVX, KEM
M39014/05-2218	82	100	10	S	AVX, KEM
M39014/05-2219	100	100	10	S	AVX, KEM
M39014/05-2220	100	100	20	S	AVX, KEM
M39014/05-2221	120	100	10	S	AVX, KEM
M39014/05-2222	150	100	10	S	AVX, KEM
M39014/05-2223	150	100	20	S	AVX, KEM
M39014/05-2224	180	100	10	S	AVX, KEM
M39014/05-2225	220	100	10	S	AVX, KEM
M39014/05-2226	220	100	20	S	AVX, KEM

M39014/05-2227	270	100	10	S	AVX, KEM
M39014/05-2228	330	100	10	S	AVX, KEM
M39014/05-2229	330	100	20	S	AVX, KEM
M39014/05-2230	390	100	10	S	AVX, KEM
M39014/05-2231	470	100	10	S	AVX, KEM
M39014/05-2232	470	100	20	S	AVX, KEM
M39014/05-2233	560	100	10	S	AVX, KEM
M39014/05-2234	680	100	10	S	AVX, KEM
	Cap	Rated	Cap.	Level 2	
Part Number	Value (pF)	Voltage (V)	Tol. (+/- %)	(FRL)	Manufacturer
M39014/05-2235	680	100	20	S	AVX, KEM
M39014/05-2236	820	100	10	S	AVX, KEM
M39014/05-2237	1000	100	10	S	AVX, KEM
M39014/05-2238	1000	100	20	S	AVX, KEM
M39014/05-2239	1200	100	10	S	AVX, KEM
M39014/05-2240	1500	100	10	S	AVX, KEM
M39014/05-2241	1500	100	20	S	AVX, KEM
M39014/05-2242	1800	100	10	S	AVX, KEM
M39014/05-2243	2100	100	10	S	AVX, KEM
M39014/05-2244	2100	100	20	S	AVX, KEM
M39014/05-2245	2700	100	10	S	AVX, KEM
M39014/05-2246	3300	100	10	S	AVX, KEM
M39014/05-2247	3300	100	20	S	AVX, KEM
M39014/05-2248	3900	100	10	S	AVX, KEM
M39014/05-2249	4700	100	10	S	AVX, KEM
M39014/05-2250	4700	100	20	S	AVX, KEM
M39014/05-2251	5600	50	10	S	AVX, KEM
M39014/05-2252	6800	50	10	S	AVX, KEM
	Cap	Rated	Cap.	Level 2	
Part Number	Value (pF)	Voltage (V)	Tol. (+/- %)	(FRL)	Manufacturer
M39014/05-2253	6800	50	20	S	AVX, KEM
M39014/05-2254	8200	50	10	S	AVX, KEM
M39014/05-2255	10000	50	10	S	AVX, KEM
M39014/05-2256	10000	50	20	S	AVX, KEM
	Cap	Rated	Cap.	Level 2	
Part Number	Value (pF)	Voltage (V)	Tol. (+/- %)	(FRL)	Manufacturer

CKR12 Ceramic Capacitors

	Cap	Rated	Cap.	Level 2	
Part Number	Value (pF)	Voltage (V)	Tol. (+/- %)	(FRL)	Manufacturer
M39014/05-2257	5600	100	10	S	AVX, KEM
M39014/05-2258	6800	100	10	S	AVX, KEM
M39014/05-2259	6800	100	20	S	AVX, KEM
M39014/05-2260	8200	100	10	S	AVX, KEM

M39014/05-2261	10000	100	10	S	AVX, KEM
M39014/05-2262	10000	100	20	S	AVX, KEM
M39014/05-2263	11000	50	10	S	AVX, KEM
M39014/05-2264	15000	50	10	S	AVX, KEM
M39014/05-2265	15000	50	20	S	AVX, KEM
M39014/05-2266	18000	50	10	S	AVX, KEM
M39014/05-2267	21000	50	10	S	AVX, KEM
M39014/05-2268	21000	50	20	S	AVX, KEM
M39014/05-2269	27000	50	10	S	AVX, KEM
M39014/05-2270	33000	50	10	S	AVX, KEM
M39014/05-2271	33000	50	20	S	AVX, KEM
M39014/05-2272	39000	50	10	S	AVX, KEM
M39014/05-2273	47000	50	10	S	AVX, KEM
M39014/05-2274	47000	50	20	S	AVX, KEM
	Cap	Rated	Cap.	Level 2	
Part Number	Value (pF)	Voltage (V)	Tol. (+/- %)	(FRL)	Manufacturer

CKR14 Ceramic Capacitors

	Cap	Rated	Cap.	Level 2	
Part Number	Value (pF)	Voltage (V)	Tol. (+/- %)	(FRL)	Manufacturer
M39014/05-2275	12000	100	10	S	AVX, KEM
M39014/05-2276	15000	100	10	S	AVX, KEM
M39014/05-2277	15000	100	20	S	AVX, KEM
M39014/05-2278	18000	100	10	S	AVX, KEM
M39014/05-2279	22000	100	10	S	AVX, KEM
M39014/05-2280	22000	100	20	S	AVX, KEM
M39014/05-2281	27000	100	10	S	AVX, KEM
M39014/05-2282	33000	100	10	S	AVX, KEM
M39014/05-2283	33000	100	20	S	AVX, KEM
M39014/05-2284	39000	100	10	S	AVX, KEM
M39014/05-2285	47000	100	10	S	AVX, KEM
M39014/05-2286	47000	100	20	S	AVX, KEM
M39014/05-2287	56000	50	10	S	AVX, KEM
M39014/05-2288	68000	50	10	S	AVX, KEM
M39014/05-2289	68000	50	20	S	AVX, KEM
M39014/05-2290	82000	50	10	S	AVX, KEM
M39014/05-2291	100000	50	10	S	AVX, KEM
M39014/05-2292	100000	50	20	S	AVX, KEM
	Cap	Rated	Cap.	Level 2	
Part Number	Value (pF)	Voltage (V)	Tol. (+/- %)	(FRL)	Manufacturer

CKR15 Ceramic Capacitors

	Cap	Rated	Cap.	Level 2	
Part Number	Value (pF)	Voltage (V)	Tol. (+/- %)	(FRL)	Manufacturer
M39014/05-2306	56000	100	10	S	AVX, KEM
M39014/05-2307	68000	100	10	S	AVX, KEM
M39014/05-2308	68000	100	20	S	AVX, KEM
M39014/05-2310	100000	100	10	S	AVX, KEM
M39014/05-2311	100000	100	20	S	AVX, KEM
M39014/05-2312	120000	100	10	S	AVX, KEM
M39014/05-2313	150000	100	10	S	AVX, KEM
M39014/05-2314	150000	100	20	S	AVX, KEM
M39014/05-2315	180000	100	10	S	AVX, KEM
M39014/05-2316	220000	100	10	S	AVX, KEM
M39014/05-2317	220000	100	20	S	AVX, KEM
M39014/05-2318	270000	100	10	S	AVX, KEM
M39014/05-2319	330000	100	10	S	AVX, KEM
M39014/05-2320	330000	100	20	S	AVX, KEM
M39014/05-2321	470000	100	10	S	AVX, KEM
M39014/05-2322	470000	100	20	S	AVX, KEM
	Cap	Rated	Cap.	Level 2	
Part Number	Value (pF)	Voltage (V)	Tol. (+/- %)	(FRL)	Manufacturer

CKR22 Ceramic Capacitors

	Cap	Rated	Cap.	Level 2	
Part Number	Value (pF)	Voltage (V)	Tol. (+/- %)	(FRL)	Manufacturer
M39014/22-0901	1.0	200	0.5 pF	S	AVX
M39014/22-0904	1.2	200	0.5 pF	S	AVX
M39014/22-0907	1.5	200	0.5 pF	S	AVX
M39014/22-0910	1.8	200	0.5 pF	S	AVX
M39014/22-0913	2.2	200	0.5 pF	S	AVX
M39014/22-0916	2.7	200	0.5 pF	S	AVX
M39014/22-0919	3.3	200	0.5 pF	S	AVX
M39014/22-0922	3.9	200	0.5 pF	S	AVX
M39014/22-0925	4.7	200	0.5 pF	S	AVX
M39014/22-0928	5.6	200	0.5 pF	S	AVX
M39014/22-0931	6.8	200	0.5 pF	S	AVX
M39014/22-0934	8.2	200	0.5 pF	S	AVX
M39014/22-0937	10	200	0.5 pF	S	AVX
M39014/22-0938	10	200	5.0	S	AVX
M39014/22-0939	10	200	10	S	AVX
M39014/22-0940	12	200	0.5 pF	S	AVX
M39014/22-0941	12	200	5.0	S	AVX
M39014/22-0942	12	200	10	S	AVX
	Cap	Rated	Cap.	Level 2	
Part Number	Value (pF)	Voltage (V)	Tol. (+/- %)	(FRL)	Manufacturer

M39014/22-0943	15	200	0.5 pF	S	AVX
M39014/22-0944	15	200	5.0	S	AVX
M39014/22-0945	15	200	10	S	AVX
M39014/22-0946	18	200	0.5 pF	S	AVX
M39014/22-0947	18	200	5.0	S	AVX
M39014/22-0948	18	200	10	S	AVX
M39014/22-0949	22	200	0.5 pF	S	AVX
M39014/22-0950	22	200	5.0	S	AVX
M39014/22-0951	22	200	10	S	AVX
M39014/22-0952	27	200	0.5 pF	S	AVX
M39014/22-0953	27	200	5.0	S	AVX
M39014/22-0954	27	200	10	S	AVX
M39014/22-0955	33	200	0.5 pF	S	AVX
M39014/22-0956	33	200	5.0	S	AVX
M39014/22-0957	33	200	10	S	AVX
M39014/22-0958	39	200	0.5 pF	S	AVX
M39014/22-0959	39	200	5.0	S	AVX
M39014/22-0960	39	200	10	S	AVX
	Cap	Rated	Cap.	Level 2	
Part Number	Value (pF)	Voltage (V)	Tol. (+/- %)	(FRL)	Manufacturer
M39014/22-0961	47	200	0.5 pF	S	AVX
M39014/22-0962	47	200	5.0	S	AVX
M39014/22-0963	47	200	10	S	AVX
M39014/22-0964	56	200	0.5 pF	S	AVX
M39014/22-0965	56	200	5.0	S	AVX
M39014/22-0966	56	200	10	S	AVX
M39014/22-0967	68	200	1.0	S	AVX
M39014/22-0968	68	200	5.0	S	AVX
M39014/22-0969	68	200	10	S	AVX
M39014/22-0970	82	200	1.0	S	AVX
M39014/22-0971	82	200	5.0	S	AVX
M39014/22-0972	82	200	10	S	AVX
M39014/22-0973	100	200	1.0	S	AVX
M39014/22-0974	100	200	5.0	S	AVX
M39014/22-0975	100	200	10	S	AVX
M39014/22-0976	120	200	1.0	S	AVX
M39014/22-0977	120	200	5.0	S	AVX
M39014/22-0978	120	200	10	S	AVX
	Cap	Rated	Cap.	Level 2	
Part Number	Value (pF)	Voltage (V)	Tol. (+/- %)	(FRL)	Manufacturer
M39014/22-0979	150	200	1.0	S	AVX
M39014/22-0980	150	200	5.0	S	AVX
M39014/22-0981	150	200	10	S	AVX
M39014/22-0982	180	200	1.0	S	AVX
M39014/22-0983	180	200	5.0	S	AVX
M39014/22-0984	180	200	10	S	AVX
M39014/22-0985	220	200	1.0	S	AVX

M39014/22-0986	220	200	5.0	S	AVX
M39014/22-0987	220	200	10	S	AVX
M39014/22-0988	270	200	1.0	S	AVX
M39014/22-0989	270	200	5.0	S	AVX
M39014/22-0990	270	200	10	S	AVX
M39014/22-0991	330	200	1.0	S	AVX
M39014/22-0992	330	200	5.0	S	AVX
M39014/22-0993	330	200	10	S	AVX
M39014/22-0994	390	200	1.0	S	AVX
M39014/22-0995	390	200	5.0	S	AVX
M39014/22-0996	390	200	10	S	AVX
	Cap	Rated	Cap.	Level 2	
Part Number	Value (pF)	Voltage (V)	Tol. (+/- %)	(FRL)	Manufacturer
M39014/22-0997	470	200	1.0	S	AVX
M39014/22-0998	470	200	5.0	S	AVX
M39014/22-0999	470	200	10	S	AVX
M39014/22-1000	560	100	1.0	S	AVX
M39014/22-1001	560	100	5.0	S	AVX
M39014/22-1002	560	100	10	S	AVX
M39014/22-1003	680	100	1.0	S	AVX
M39014/22-1004	680	100	5.0	S	AVX
M39014/22-1005	680	100	10	S	AVX
M39014/22-1006	820	100	1.0	S	AVX
M39014/22-1007	820	100	5.0	S	AVX
M39014/22-1008	820	100	10	S	AVX
M39014/22-1009	1000	100	1.0	S	AVX
M39014/22-1010	1000	100	5.0	S	AVX
M39014/22-1011	1000	100	10	S	AVX
M39014/22-1012	1200	100	1.0	S	AVX
M39014/22-1013	1200	100	5.0	S	AVX
M39014/22-1014	1200	100	10	S	AVX
	Cap	Rated	Cap.	Level 2	
Part Number	Value (pF)	Voltage (V)	Tol. (+/- %)	(FRL)	Manufacturer
M39014/22-1015	1500	100	1.0	S	AVX
M39014/22-1016	1500	100	5.0	S	AVX
M39014/22-1017	1500	100	10	S	AVX
M39014/22-1018	1800	100	1.0	S	AVX
M39014/22-1019	1800	100	5.0	S	AVX
M39014/22-1020	1800	100	10	S	AVX
M39014/22-1021	2200	100	1.0	S	AVX
M39014/22-1022	2200	100	5.0	S	AVX
M39014/22-1023	2200	100	10	S	AVX
M39014/22-1024	2700	50	1.0	S	AVX
M39014/22-1025	2700	50	5.0	S	AVX
M39014/22-1026	2700	50	10	S	AVX
M39014/22-1027	3300	50	1.0	S	AVX
M39014/22-1028	3300	50	5.0	S	AVX

M39014/22-1029	3300	50	10	S	AVX
M39014/22-1030	3900	50	1.0	S	AVX
M39014/22-1031	3900	50	5.0	S	AVX
M39014/22-1032	3900	50	10	S	AVX
	Cap	Rated	Cap.	Level 2	
Part Number	Value (pF)	Voltage (V)	Tol. (+/- %)	(FRL)	Manufacturer
M39014/22-1033	4700	50	1.0	S	AVX
M39014/22-1034	4700	50	5.0	S	AVX
M39014/22-1035	4700	50	10	S	AVX
M39014/22-1036	5600	50	1.0	S	AVX
M39014/22-1037	5600	50	5.0	S	AVX
M39014/22-1038	5600	50	10	S	AVX
M39014/22-1039	6800	50	1.0	S	AVX
M39014/22-1040	6800	50	5.0	S	AVX
M39014/22-1041	6800	50	10	S	AVX
M39014/22-1042	8200	50	1.0	S	AVX
M39014/22-1043	8200	50	5.0	S	AVX
M39014/22-1044	8200	50	10	S	AVX
M39014/22-1045	10000	50	1.0	S	AVX
M39014/22-1046	10000	50	5.0	S	AVX
M39014/22-1047	10000	50	10	S	AVX
M39014/22-1048	270	200	10	S	AVX
M39014/22-1049	330	200	10	S	AVX
M39014/22-1050	330	200	20	S	AVX
	Cap	Rated	Cap.	Level 2	
Part Number	Value (pF)	Voltage (V)	Tol. (+/- %)	(FRL)	Manufacturer
M39014/22-1051	390	200	10	S	AVX
M39014/22-1052	470	200	10	S	AVX
M39014/22-1053	470	200	20	S	AVX
M39014/22-1054	560	200	10	S	AVX
M39014/22-1055	680	200	10	S	AVX
M39014/22-1056	680	200	20	S	AVX
M39014/22-1057	820	200	10	S	AVX
M39014/22-1058	1000	100	10	S	AVX
M39014/22-1059	1000	100	20	S	AVX
M39014/22-1060	1200	100	10	S	AVX
M39014/22-1061	1500	100	10	S	AVX
M39014/22-1062	1500	100	20	S	AVX
M39014/22-1063	1800	100	10	S	AVX
M39014/22-1064	2200	100	10	S	AVX
M39014/22-1065	2200	100	20	S	AVX
M39014/22-1066	2700	100	10	S	AVX
M39014/22-1067	3300	100	10	S	AVX
M39014/22-1068	3300	100	20	S	AVX
	Cap	Rated	Cap.	Level 2	
Part Number	Value (pF)	Voltage (V)	Tol. (+/- %)	(FRL)	Manufacturer
M39014/22-1069	3900	100	10	S	AVX

M39014/22-1070	4700	100	10	S	AVX
M39014/22-1071	4700	100	20	S	AVX
M39014/22-1072	5600	100	10	S	AVX
M39014/22-1073	6800	100	10	S	AVX
M39014/22-1074	6800	100	20	S	AVX
M39014/22-1075	8200	100	10	S	AVX
M39014/22-1076	10000	100	10	S	AVX
M39014/22-1077	10000	100	20	S	AVX
M39014/22-1078	12000	50	10	S	AVX
M39014/22-1079	15000	50	10	S	AVX
M39014/22-1080	15000	50	20	S	AVX
M39014/22-1081	18000	50	10	S	AVX
M39014/22-1082	22000	50	10	S	AVX
M39014/22-1083	22000	50	20	S	AVX
M39014/22-1084	27000	50	10	S	AVX
M39014/22-1085	33000	50	10	S	AVX
M39014/22-1086	33000	50	20	S	AVX
	Cap	Rated	Cap.	Level 2	
Part Number	Value (pF)	Voltage (V)	Tol. (+/- %)	(FRL)	Manufacturer
M39014/22-1087	39000	50	10	S	AVX
M39014/22-1088	47000	50	10	S	AVX
M39014/22-1089	47000	50	20	S	AVX
M39014/22-1090	56000	50	10	S	AVX
M39014/22-1091	68000	50	10	S	AVX
M39014/22-1092	68000	50	20	S	AVX
M39014/22-1093	82000	50	10	S	AVX
M39014/22-1094	100000	50	10	S	AVX
M39014/22-1095	100000	50	20	S	AVX
	Cap	Rated	Cap.	Level 2	
Part Number	Value (pF)	Voltage (V)	Tol. (+/- %)	(FRL)	Manufacturer

CKR23 Ceramic Capacitors

	Cap	Rated	Cap.	Level 2	
Part Number	Value (pF)	Voltage (V)	Tol. (+/- %)	(FRL)	Manufacturer
M39014/22-1158	560	200	1.0	S	AVX
M39014/22-1159	560	200	5.0	S	AVX
M39014/22-1160	560	200	10	S	AVX
M39014/22-1161	680	200	1.0	S	AVX
M39014/22-1162	680	200	5.0	S	AVX
M39014/22-1163	680	200	10	S	AVX
M39014/22-1164	820	200	1.0	S	AVX
M39014/22-1165	820	200	5.0	S	AVX
M39014/22-1166	820	200	10	S	AVX
M39014/22-1167	1000	200	1.0	S	AVX

M39014/22-1168	1000	200	5.0	S	AVX
M39014/22-1169	1000	200	10	S	AVX
M39014/22-1170	1200	200	1.0	S	AVX
M39014/22-1171	1200	200	5.0	S	AVX
M39014/22-1172	1200	200	10	S	AVX
M39014/22-1173	2700	100	1.0	S	AVX
M39014/22-1174	2700	100	5.0	S	AVX
M39014/22-1175	2700	100	10	S	AVX
	Cap	Rated	Cap.	Level 2	
Part Number	Value (pF)	Voltage (V)	Tol. (+/- %)	(FRL)	Manufacturer
M39014/22-1176	3300	100	1.0	S	AVX
M39014/22-1177	3300	100	5.0	S	AVX
M39014/22-1178	3300	100	10	S	AVX
M39014/22-1179	4700	50	1.0	S	AVX
M39014/22-1180	4700	50	5.0	S	AVX
M39014/22-1181	4700	50	10	S	AVX
M39014/22-1182	5600	50	1.0	S	AVX
M39014/22-1183	5600	50	5.0	S	AVX
M39014/22-1184	5600	50	10	S	AVX
M39014/22-1185	6800	50	1.0	S	AVX
M39014/22-1186	6800	50	5.0	S	AVX
M39014/22-1187	6800	50	10	S	AVX
M39014/22-1188	8200	50	1.0	S	AVX
M39014/22-1189	8200	50	5.0	S	AVX
M39014/22-1190	8200	50	10	S	AVX
M39014/22-1191	10000	50	1.0	S	AVX
M39014/22-1192	10000	50	5.0	S	AVX
M39014/22-1193	10000	50	10	S	AVX
	Cap	Rated	Cap.	Level 2	
Part Number	Value (pF)	Voltage (V)	Tol. (+/- %)	(FRL)	Manufacturer
M39014/22-1096	1000	200	10	S	AVX
M39014/22-1097	1000	200	20	S	AVX
M39014/22-1098	1200	200	10	S	AVX
M39014/22-1099	1500	200	10	S	AVX
M39014/22-1100	1500	200	20	S	AVX
M39014/22-1101	1800	200	10	S	AVX
M39014/22-1102	2200	200	10	S	AVX
M39014/22-1103	2200	200	20	S	AVX
M39014/22-1104	2700	200	10	S	AVX
M39014/22-1105	3300	200	10	S	AVX
M39014/22-1106	3300	200	20	S	AVX
M39014/22-1107	3900	200	10	S	AVX
M39014/22-1108	4700	200	10	S	AVX
M39014/22-1109	4700	200	20	S	AVX
M39014/22-1110	5600	200	10	S	AVX
M39014/22-1111	6800	200	10	S	AVX
M39014/22-1112	6800	200	20	S	AVX

M39014/22-1113	8200	200	10	S	AVX
	Cap	Rated	Cap.	Level 2	
Part Number	Value (pF)	Voltage (V)	Tol. (+/- %)	(FRL)	Manufacturer
M39014/22-1114	10000	200	10	S	AVX
M39014/22-1115	10000	200	20	S	AVX
M39014/22-1116	12000	100	10	S	AVX
M39014/22-1117	15000	100	10	S	AVX
M39014/22-1118	15000	100	20	S	AVX
M39014/22-1119	18000	100	10	S	AVX
M39014/22-1120	22000	100	10	S	AVX
M39014/22-1121	22000	100	20	S	AVX
M39014/22-1122	27000	100	10	S	AVX
M39014/22-1123	33000	100	10	S	AVX
M39014/22-1124	33000	100	20	S	AVX
M39014/22-1125	39000	100	10	S	AVX
M39014/22-1126	47000	100	10	S	AVX
M39014/22-1127	47000	100	20	S	AVX
M39014/22-1128	56000	100	10	S	AVX
M39014/22-1129	68000	100	10	S	AVX
M39014/22-1130	68000	100	20	S	AVX
M39014/22-1131	82000	100	10	S	AVX
	Cap	Rated	Cap.	Level 2	
Part Number	Value (pF)	Voltage (V)	Tol. (+/- %)	(FRL)	Manufacturer
M39014/22-1132	100000	100	10	S	AVX
M39014/22-1133	100000	100	20	S	AVX
M39014/22-1134	120000	50	10	S	AVX
M39014/22-1135	150000	50	10	S	AVX
M39014/22-1136	150000	50	20	S	AVX
M39014/22-1137	180000	50	10	S	AVX
M39014/22-1138	220000	50	10	S	AVX
M39014/22-1139	220000	50	20	S	AVX
	Cap	Rated	Cap.	Level 2	
Part Number	Value (pF)	Voltage (V)	Tol. (+/- %)	(FRL)	Manufacturer

CKR24 Ceramic Capacitors

	Cap	Rated	Cap.	Level 2	
Part Number	Value (pF)	Voltage (V)	Tol. (+/- %)	(FRL)	Manufacturer
M39014/22-1140	120000	100	10	S	AVX
M39014/22-1141	150000	100	10	S	AVX
M39014/22-1142	150000	100	20	S	AVX
M39014/22-1143	180000	50	10	S	AVX
M39014/22-1144	220000	50	10	S	AVX
M39014/22-1145	220000	50	20	S	AVX
M39014/22-1146	270000	50	10	S	AVX

M39014/22-1147	330000	50	10	S	AVX
M39014/22-1148	330000	50	20	S	AVX
M39014/22-1149	390000	50	10	S	AVX
M39014/22-1150	470000	50	10	S	AVX
M39014/22-1151	470000	50	20	S	AVX
M39014/22-1152	560000	50	10	S	AVX
M39014/22-1153	680000	50	10	S	AVX
M39014/22-1154	680000	50	20	S	AVX
M39014/22-1155	820000	50	10	S	AVX
M39014/22-1156	1000000	50	10	S	AVX
M39014/22-1157	1000000	50	20	S	AVX
	Cap	Rated	Cap.	Level 2	
Part Number	Value (pF)	Voltage (V)	Tol. (+/- %)	(FRL)	Manufacturer

Axial Lead, Fixed, Ceramic Dielectric, Established Reliability

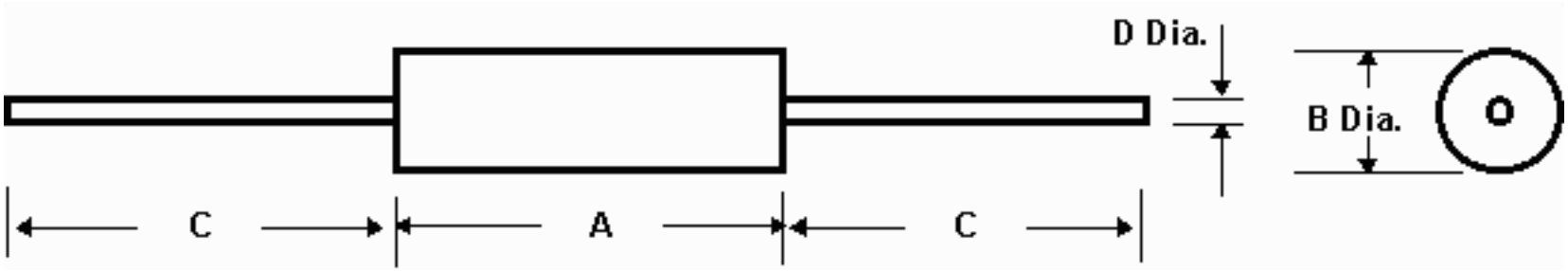

Physical Dimensions Table

All dimensions are in inches

Style	A	B	C	D
CKR11	0.160+/-0.010	0.090+/-0.010	1.250 min.	0.019+/-0.002
CKR12	0.250+/-0.010	0.090+/-0.010	1.250 min.	0.019+/-0.002
CKR14	0.390+/-0.010	0.140+/-0.010	1.250 min.	0.025+/-0.002
CKR15	0.500+/-0.020	0.250+/-0.020	1.250 min.	0.025+/-0.002
CKR16	0.690+/-0.020	0.350+/-0.020	1.250 min.	0.025+/-0.002

Notes:

1) Nonconductive material shall not extend beyond 0.010 inches from end of capacitor body.

2) Lead length may be a minimum of 1.000 inches long for use in tape and reel automatic insertion equipment, when specified in the ordering data.

Dual In-Line Package (DIP), Fixed, Ceramic Dielectric, Established Reliability

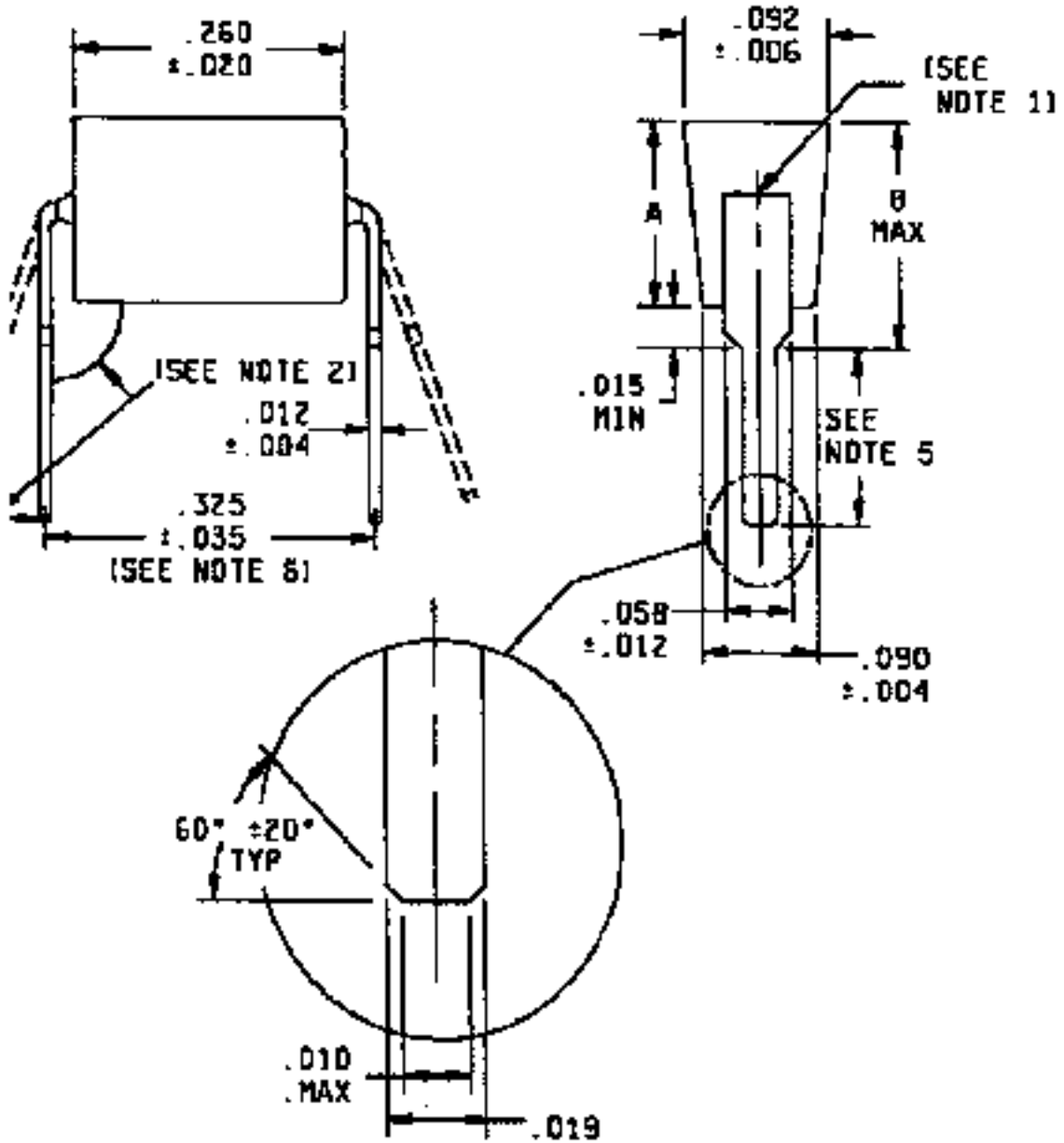

Style	A +/- 0.007	B
CKR22	0.128	0.175
CKR23	0.155	0.195
CKR24	0.283	0.320

NOTES:

1. Leads shall be centered within +/-0.005 inches (0.13 mm).
2. The angle shall be 95deg. +10deg., -5deg..
3. Dimensions are in inches.
4. Metric equivalents are given for general information only.
5. For standard lead length: 0.140 +/-0.020 inch (3.56 +/-0.51 mm); for optional longer lead length: 0.170 +/-0.010 inch (4.32 +/-0.25 mm).
6. The distance between the centers of the mounting holes will be 0.300+/-0.010 inches (7.62+/-0.25 mm).
7. Nonconductive material shall not extend beyond 0.030 inches (0.76 mm) from the edge of the capacitor body.

Radial Lead, Fixed, Ceramic Dielectric, Established Reliability

Style CKR05

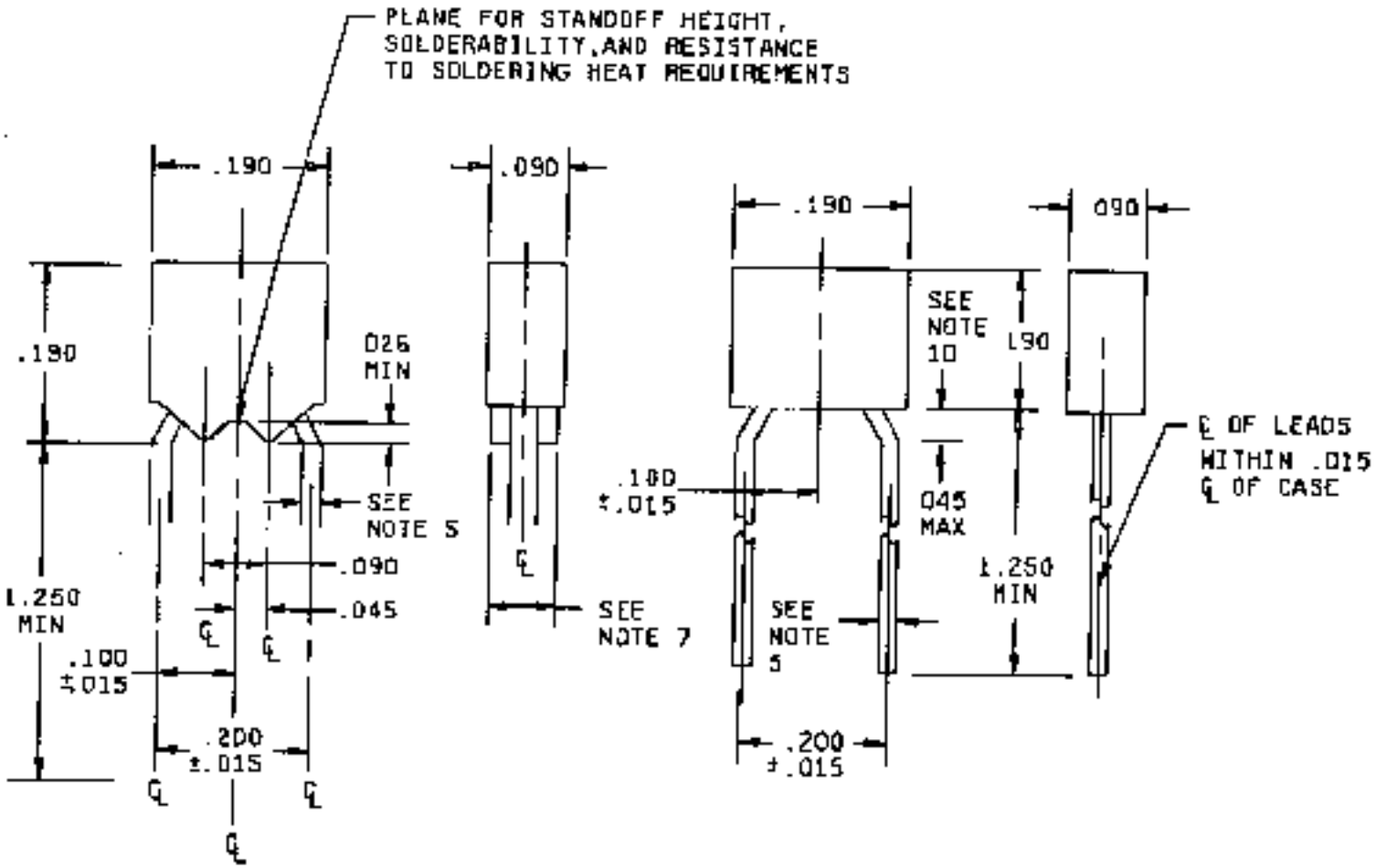

CONFIGURATION WITH STANDOFF

CONFIGURATION WITHOUT STANDOFF

Style CKR06

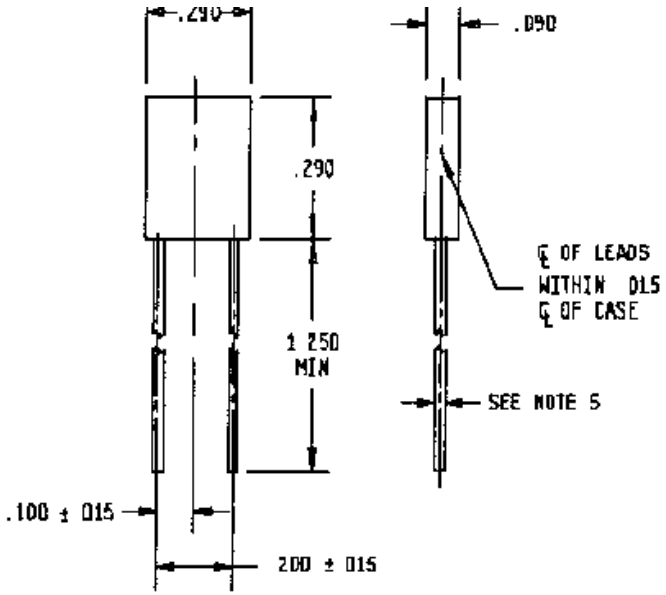

CONFIGURATION WITHOUT STANDOFFS

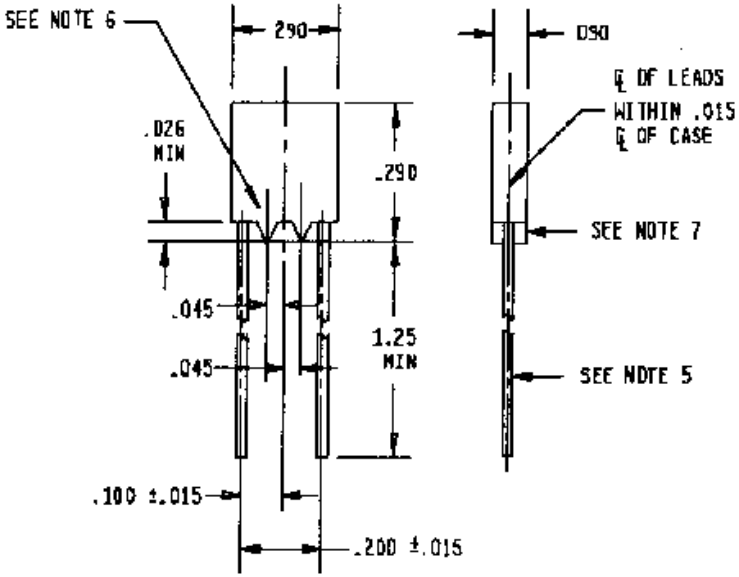

OPTIONAL CONFIGURATION WITH STANDOFFS

Go to -

NEPP

|

NPSL

|

Capacitors

MIL-PRF-49470, CAPACITORS

Fixed, Ceramic Dielectric, Switch Mode Power Supply

PS Styles

Part Number/Ordering Explanation

Important! Application Notes

Revision History for MIL-PRF-49470 Listing in the NPSL

Last Updated: 12/02/02

Click on the links below to see the associated parts selection listing:

Style	Detail Specification	Description (Click Link Below for Dimensional Drawings)	**Currently Available Capacitance Range (Rated Voltage)
PS01 (50V) PS01 (100V) PS01 (200V) PS01 (500V)	MIL-PRF-49470/1	Unencapsulated, Horizontally Stacked	1.0 uF to 270 uF (50 V) 0.68 uF to 180 uF (100 V) 0.47 uF to 12 uF (200 V
PS02 (50V) PS02 (100V) PS02 (200V) PS02 (500V)	MIL-PRF-49470/2	Encapsulated, Horizontally Stacked	1.0 uF to 270 uF (50 V) 0.68 uF to 180 uF (100 V) 0.47 uF to 12 uF (200 V

**Note:

The parts listed above represent currently available styles, capacitance ranges and voltage ratings only. MIL-PRF-49470 specifies additional parts; however, there are no sources available for any parts except those listed herein.

APPLICATION NOTES FOR MIL-{RF-49470

1) When available MIL-PRF-49470 SMPS capacitors are preferred over DSCC-DWG-87106 capacitors. The MIL-PRF-49470 specification was developed as part of a cooperative effort amongst the US Military, NASA and the SMPS suppliers to produce a robust replacement for the DSCC drawing. The MIL spec product provides additional quality assurance provisions which are NOT required by the DSCC drawing. Some of the benefits of the MIL-PRF-49470 product over the DSCC-DWG-87106 product include:

Requirement	MIL-PRF-49470	DSCC-DWG-87106
Formal Qualification Process (QPL Established)	Yes	No
MIL-STD-790 Compliance	Yes	No
DSCC Audits	Yes	No
Routine Qualification Maintenance Testing (ie., Life Testing)	Yes	No
Group A Percent Defective Allowed (PDA) Specified	Yes	No
Prohibits Mixing of Chips from Different Production Lots within a Single SMPS Stack Lot	Yes	No

2) CAUTION! Designers must consider the geometry and relatively high mass of capacitors described by this specification. Devices which are not mounted properly may be susceptible to damage, including lead shearing, in high vibration and shock environments. The taller stacks where the stack height exceeds the minimum base dimension are particularly at risk. Special mounting techniques may be necessary to ensure safe application in these environments. Consult the manufacturer

or parts engineering for recommendations to avoid potential damage from misuse of straps, coefficient of thermal expansion mismatches, etc.

3) Capacitors described by this specification are very susceptible to thermal shock damage due to their large mass of ceramic. Installation temperature profiles should provide adequate temperature rise and cool-down time to prevent damage from thermal shock.

4) Capacitors described by this specification are fragile and should be handled with extreme care. Parts which have been dropped or mishandled should be considered suspect due to the risk of microcracking which may result in latent failures.

5) The "T" Level product is recommended for all Level 1 applications. Per MIL-PRF-49470, "T" level product requires in-process inspections and additional Group A and B screening inspections shown below that are not part of the normal "B" level flow.

"T" Level Requirements in Addition to the Normal "B" Level Requirements
In-Process Screening Non-Destructive Internal Examination (Chip Level) Destructive Physical Analysis (Chip Level)
Group A Destructive Physical Analysis (Finished Stack Level)
Group B Lot Specific Humidity, Steady-State, Low Voltage (Lot Sample Test) Lot Specific Thermal Shock & Life Test (Lot Sample Test)

6) For Level 2 applications at >=10 Vdc, "B" or "T" Level capacitors can be used in accordance with the type, value and failure rate guidelines shown in the tables.

7) For Level 2 low voltage applications (< 10 Vdc), "B" level capacitor rated voltage should be at least 100 Vdc. Alternatively, "B" level parts rated at less than 100 Vdc can be used if flight lots are subjected to lot sample testing per Group B Subgroup 4 of MIL-PRF-49470 (Humidity, Steady-State, Low Voltage). "T" level parts can be used "as-is" because the Humidity, Steady-State, Low Voltage test is required on lot by lot basis. Recommendations for performing this testing are prompted by low voltage failure concerns of multilayer ceramic capacitors.

Revision History for MIL-PRF-49470 Section of the NPSL

12/02/02	Updated Listings to reflect current QPL status (QPL-49470-11 dated Nov. 19, 2002)
04/29/02	Added "T" level parts to the tables as the preferred choice for Level 1 applications. Added application Note 5 to explain the "T" level requirements. Replaced previous Note 5 (low voltage, steady st
12/10/01	Updated PS01 and PS02 listings to reflect updated qualification status of AVX and Presidio per QPL-49470-5. Also added Johanson Dielectrics as a source of supply for some PS01 styles rated at 200 V p
09/02/99	Added Presidio Components qualification status for PS01 500 V caps in BQ characteristic from 0.15 uF up to 5.6uF.
08/02/99	Added Presidio Components qualification status for PS01 100 V caps in BX characteristic up to 8.2 uF. Corrected the AVX listing for PS01 and PS02 100 V caps. Originally, the listing indicated tha
07/07/99	Initial Release of MIL-PRF-49470 Section in the NPSL

Part Number Ordering Information, example and explanation:

M49470P01473KBN where,

M49470	P	01	473	K	B	N
Military Specification Number	Characteristic	Slash Sheet Number	Capacitance	Capacitance Tolerance	Rated Voltage	Lead Configuration

Military Specification Number	Reliability Level
M49470	Standard Reliability (also known as "B" Level)

T49470	High Reliability (also known as "T" Level)

	Capacitance Change with Reference to 25deg.C	Capacitance Change with Reference to 25deg.C
Characteristic Symbol	No Voltage Applied	Rated Voltage Applied
P	0 ppm/deg.C +/- 30 ppm/deg.C	0 ppm/deg.C +/- 30 ppm/deg.C
Q	+/- 15%	+ 15%, -50%
R	+/- 15%	+ 15%, -40%
X	+/- 15%	+ 15%, -25%

Detail Specification	Style	Description
MIL-PRF-49470/1	PS01	Unencapsulated, Horizontally Stacked
MIL-PRF-49470/2	PS02	Encapsulated, Horizontally Stacked
**MIL-PRF-49470/3	PS03	Conformally Coated, Horizontally Stacked
**MIL-PRF-49470/4	PS04	Unencapsulated, Vertically Stacked
**MIL-PRF-49470/5	PS05	Encapsulated, Vertically Stacked
**MIL-PRF-49470/6	PS06	Conformally Coated, Vertically Stacked

** No qualified sources available

Capacitor Values:

The nominal capacitance value, expressed in picofarads (pF) is identified by a three digit number; the first two digits represent significant figures and the last digit specifies the number of zeroes to follow. For example 104 indicates 100,000 pF and 475 indicates 4,700,000 pF.

Capacitance Tolerance Symbol	Capacitance Tolerance		Rated Voltage Symbol	Rated Voltage
J	+/- 5%		A	50
K	+/- 10%		B	100
M	+/- 20%		C	200
			E	500

Lead Configuration	Lead Style	Height Profile (Dimension A)	Formed Lead Length, L (inches)
N	Normal, Straight	Standard	N/A
L	"L" (90deg. bend away from center of part)	Standard	0.070 +/- 0.010
M	"L" (90deg. bend away from center of part)	Standard	0.045 +/- 0.010
J	"J" (90deg. bend toward center of part)	Standard	0.070 +/- 0.010
K	"J" (90deg. bend toward center of part)	Standard	0.045 +/- 0.010
A	Normal, Straight	Low	N/A
B	"L" (90deg. bend away from center of part)	Low	0.070 +/- 0.010
D	"L" (90deg. bend away from center of part)	Low	0.045 +/- 0.010
C	"J" (90deg. bend toward center of part)	Low	0.070 +/- 0.010

F	"J" (90deg. bend toward center of part)	Low	0.045 +/- 0.010

MIL-PRF-49470, CAPACITORS

Fixed, Ceramic Dielectric, Switch Mode Power Supply

Physical Dimensions Table

Case Code	A (Max) See Note 4	B (Max) See Note 4	C +/-0.025	D (Min)	D (Max)	E (Max)	Number of Pins per Side
1	0.650	0.715	0.450	1.950	2.075	0.500	20
2	0.650	0.715	0.800	1.450	1.535	0.870	15
3	0.650	0.715	0.450	0.950	1.075	0.500	10
4	0.650	0.715	0.400	0.350	0.425	0.440	4
5	0.650	0.715	0.250	0.224	0.275	0.300	3
6	0.650	0.715	1.250	1.950	2.075	1.350	20

Notes:

1) Dimensions are in inches.

2) Metric equivalents are given for general information only.

3) Unless otherwise specified, tolerances are +/-0.010 inches.

4) Lead frame configuration is shown as typical above the seating plane.

5) See the part selection list table for maximum A dimension. For maximum B dimension, add 0.065 inch to the appropriate A dimension. For all lead styles, the number of chips is determined by the capacitance and voltage rating.

6) For case code 5, dimensions shall be 0.100 inches maximum, 0.012 inches minimum.

7) Lead alignment within pin rows shall be within +/-0.005 inches.

MIL-PRF-49470/1 Ceramic Switch Mode Power Supply (SMPS) Capacitors

Part Number	Capacitance (uF)	Rated Volt (V)	Cap. Tol. (%)	Temp. Char.	Case Code	Lead Style (#)	Max. "A" Dimension	Level	Manufacturer
M49470P01563%A#	0.056	50	J,K	BP	5	J,L,N	0.120	3	N/A
M49470P01683%A#	0.068	50	J,K	BP	5	J,L,N	0.240	3	N/A
M49470P01823%A#	0.082	50	J,K	BP	5	J,L,N	0.240	3	N/A
M49470P01104%A#	0.1	50	J,K	BP	5	J,L,N	0.240	3	N/A
M49470P01124%A#	0.12	50	J,K	BP	5	J,L,N	0.360	3	N/A
M49470P01154%A#	0.15	50	J,K	BP	5	J,L,N	0.360	3	N/A
M49470P01184%A#	0.180	50	J,K	BP	5	J,L,N	0.480	3	N/A
M49470P01224%A#	0.220	50	J,K	BP	5	J,L,N	0.480	3	N/A
M49470P01274%A#	0.270	50	J,K	BP	5	J,L,N	0.650	3	N/A
M49470P01334%A#	0.330	50	J,K	BP	4	J,L,N	0.360	3	N/A
M49470P01394%A#	0.390	50	J,K	BP	4	J,L,N	0.480	3	N/A
M49470P01474%A#	0.470	50	J,K	BP	4	J,L,N	0.480	3	N/A
M49470P01564%A#	0.560	50	J,K	BP	4	J,L,N	0.650	3	N/A
M49470P01684%A#	0.680	50	J,K	BP	3	J,L,N	0.240	3	N/A
M49470P01824%A#	0.820	50	J,K	BP	3	J,L,N	0.240	3	N/A
M49470P01105%A#	1.0	50	J,K	BP	3	J,L,N	0.360	3	N/A
M49470X01105%A#	1.0	50	K,M	BX	5	J,L,N	0.120	3	N/A

M49470P01125%A#	1.2	50	J,K	BP	3	J,L,N	0.360	3	N/A
M49470X01125%A#	1.2	50	K,M	BX	5	J,L,N	0.120	3	N/A
M49470P01155%A#	1.5	50	J,K	BP	3	J,L,N	0.480	3	N/A
M49470X01155%A#	1.5	50	K,M	BX	5	J,L,N	0.240	3	N/A
M49470P01185%A#	1.8	50	J,K	BP	3	J,L,N	0.480	3	N/A
M49470X01185%A#	1.8	50	K,M	BX	5	J,L,N	0.240	3	N/A
M49470P01225%A#	2.2	50	J,K	BP	3	J,L,N	0.650	3	N/A
M49470X01225%A#	2.2	50	K,M	BX	5	J,L,N	0.240	3	N/A
M49470P01275%A#	2.7	50	J,K	BP	1	J,L,N	0.360	3	N/A
M49470X01275%A#	2.7	50	K,M	BX	5	J,L,N	0.360	3	N/A
M49470P01335%A#	3.3	50	J,K	BP	1	J,L,N	0.480	3	N/A
M49470X01335%A#	3.3	50	K,M	BX	5	J,L,N	0.360	3	N/A
M49470P01395%A#	3.9	50	J,M	BP	1	J,L,N	0.480	3	N/A
M49470X01395%A#	3.9	50	K,M	BX	5	J,L,N	0.480	3	N/A
M49470P01475%A#	4.7	50	J,M	BP	1	J,L,N	0.650	3	N/A
M49470X01475%A#	4.7	50	K,M	BX	5	J,L,N	0.480	3	N/A
M49470P01565%A#	5.6	50	J,K	BP	2	J,L,N	0.650	3	N/A
M49470X01565%A#	5.6	50	K,M	BX	5	J,L,N	0.650	3	N/A
M49470P01685%A#	6.8	50	J,K	BP	6	J,L,N	0.360	3	N/A
M49470X01685%A#	6.8	50	K,M	BX	4	J,L,N	0.360	3	N/A
M49470P01825%A#	8.2	50	J,K	BP	6	J,L,N	0.360	3	N/A
M49470X01825%A#	8.2	50	K,M	BX	4	J,L,N	0.360	3	N/A
M49470P01106%A#	10	50	J,K	BP	6	J,L,N	0.480	3	N/A
M49470P01473%A#	0.047	100	J,K	BP	5	J,L,N	0.120	3	AVX
M49470P01563%A#	0.056	100	J,K	BP	5	J,L,N	0.120	3	AVX
M49470P01683%A#	0.068	100	J,K	BP	5	J,L,N	0.240	3	AVX
M49470P01823%A#	0.082	100	J,K	BP	5	J,L,N	0.240	3	AVX
M49470P01104%A#	0.1	100	J,K	BP	5	J,L,N	0.240	3	AVX
M49470P01124%A#	0.12	100	J,K	BP	5	J,L,N	0.360	3	AVX
M49470P01154%A#	0.15	100	J,K	BP	5	J,L,N	0.360	3	AVX
M49470P01184%A#	0.180	100	J,K	BP	5	J,L,N	0.480	3	AVX
M49470P01224%A#	0.220	100	J,K	BP	5	J,L,N	0.480	3	AVX
M49470P01274%A#	0.270	100	J,K	BP	5	J,L,N	0.650	3	AVX
M49470P01334%A#	0.330	100	J,K	BP	4	J,L,N	0.360	3	AVX
M49470P01394%A#	0.390	100	J,K	BP	4	J,L,N	0.480	3	AVX
M49470P01474%A#	0.470	100	J,K	BP	4	J,L,N	0.480	3	AVX
M49470P01564%A#	0.560	100	J,K	BP	4	J,L,N	0.650	3	AVX
M49470P01684%A#	0.680	100	J,K	BP	3	J,L,N	0.240	3	AVX
M49470P01824%A#	0.820	100	J,K	BP	3	J,L,N	0.240	3	AVX
M49470P01105%A#	1.0	100	J,K	BP	3	J,L,N	0.360	3	AVX
M49470X01105%A#	1.0	100	K,M	BX	5	J,L,N	0.120	3	AVX
M49470P01125%A#	1.2	100	J,K	BP	3	J,L,N	0.360	3	AVX
M49470X01125%A#	1.2	100	K,M	BX	5	J,L,N	0.120	3	AVX
M49470P01155%A#	1.5	100	J,K	BP	3	J,L,N	0.480	3	AVX
M49470X01155%A#	1.5	100	K,M	BX	5	J,L,N	0.240	3	AVX
M49470P01185%A#	1.8	100	J,K	BP	3	J,L,N	0.480	3	AVX
M49470X01185%A#	1.8	100	K,M	BX	5	J,L,N	0.240	3	AVX

M49470P01225%A#	2.2	100	J,K	BP	3	J,L,N	0.650	3	AVX
M49470X01225%A#	2.2	100	K,M	BX	5	J,L,N	0.240	3	AVX
M49470P01275%A#	2.7	100	J,K	BP	1	J,L,N	0.360	3	AVX
M49470X01275%A#	2.7	100	K,M	BX	5	J,L,N	0.360	3	AVX
M49470P01335%A#	3.3	100	J,K	BP	1	J,L,N	0.480	3	AVX
M49470X01335%A#	3.3	100	K,M	BX	5	J,L,N	0.360	3	AVX
M49470P01395%A#	3.9	100	J,M	BP	1	J,L,N	0.480	3	AVX
M49470X01395%A#	3.9	100	K,M	BX	5	J,L,N	0.480	3	AVX
M49470P01475%A#	4.7	100	J,M	BP	1	J,L,N	0.650	3	AVX
M49470X01475%A#	4.7	100	K,M	BX	5	J,L,N	0.480	3	AVX
M49470P01565%A#	5.6	100	J,K	BP	2	J,L,N	0.650	3	AVX
M49470X01565%A#	5.6	100	K,M	BX	5	J,L,N	0.650	3	AVX
M49470P01685%A#	6.8	100	J,K	BP	6	J,L,N	0.360	3	AVX
M49470X01685%A#	6.8	100	K,M	BX	4	J,L,N	0.360	3	AVX
M49470P01825%A#	8.2	100	J,K	BP	6	J,L,N	0.360	3	AVX
M49470X01825%A#	8.2	100	K,M	BX	4	J,L,N	0.360	3	AVX
M49470P01106%A#	10	100	J,K	BP	6	J,L,N	0.480	3	AVX
M49470X01106%A#	10	100	K,M	BX	4	J,L,N	0.480	3	AVX
M49470P01126%A#	12	100	J,K	BP	6	J,L,N	0.480	3	AVX
M49470X01126%A#	12	100	K,M	BX	4	J,L,N	0.480	3	AVX
M49470P01156%A#	15	100	J,K	BP	6	J,L,N	0.650	3	AVX
M49470X01156%A#	15	100	K,M	BX	4	J,L,N	0.650	3	AVX
M49470X01186%A#	18	100	K,M	BX	3	J,L,N	0.240	3	AVX
M49470X01226%A#	22	100	K,M	BX	3	J,L,N	0.360	3	AVX
M49470X01276%A#	27	100	K,M	BX	3	J,L,N	0.360	3	AVX
M49470X01336%A#	33	100	K,M	BX	3	J,L,N	0.360	3	AVX
M49470X01396%A#	39	100	K,M	BX	3	J,L,N	0.480	3	AVX
M49470X01476%A#	47	100	K,M	BX	3	J,L,N	0.650	3	AVX
M49470X01566%A#	56	100	K,M	BX	1	J,L,N	0.360	3	AVX
M49470X01686%A#	68	100	K,M	BX	1	J,L,N	0.480	3	AVX
M49470X01826%A#	82	100	K,M	BX	1	J,L,N	0.480	3	AVX
M49470X01107%A#	100	100	K,M	BX	1	J,L,N	0.650	3	AVX
M49470X01127%A#	120	100	K,M	BX	2	J,L,N	0.480	3	AVX
M49470X01157%A#	150	100	K,M	BX	2	J,L,N	0.650	3	AVX
M49470X01187%A#	180	100	K,M	BX	6	J,L,N	0.480	3	AVX
M49470X01227%A#	220	100	K,M	BX	6	J,L,N	0.480	3	AVX
M49470X01277%A#	270	100	K,M	BX	6	J,L,N	0.650	3	AVX
M49470P01473%B#	0.047	200	J,K	BP	5	J,L,N	0.240	3	N/A
M49470P01563%B#	0.056	200	J,K	BP	5	J,L,N	0.240	3	N/A
M49470P01683%B#	0.068	200	J,K	BP	5	J,L,N	0.240	3	N/A
M49470P01823%B#	0.082	200	J,K	BP	5	J,L,N	0.240	3	N/A
M49470P01104%B#	0.1	200	J,K	BP	5	J,L,N	0.360	3	N/A
M49470P01124%B#	0.12	200	J,K	BP	5	J,L,N	0.360	3	N/A
M49470P01154%B#	0.15	200	J,K	BP	5	J,L,N	0.480	3	N/A
M49470P01184%B#	0.18	200	J,K	BP	5	J,L,N	0.650	3	N/A
M49470P01224%B#	0.22	200	J,K	BP	5	J,L,N	0.650	3	N/A
M49470P01274%B#	0.27	200	J,K	BP	4	J,L,N	0.360	3	N/A

M49470P01334%B#	0.33	200	J,K	BP	4	J,L,N	0.480	3	N/A
M49470P01394%B#	0.39	200	J,K	BP	4	J,L,N	0.480	3	N/A
M49470P01474%B#	0.47	200	J,K	BP	4	J,L,N	0.650	3	N/A
M49470P01564%B#	0.56	200	J,K	BP	4	J,L,N	0.650	3	N/A
M49470P01684%B#	0.68	200	J,K	BP	3	J,L,N	0.240	3	N/A
M49470X01684%B#	0.68	200	K,M	BX	5	J,L,N	0.120	3	N/A
M49470P01824%B#	0.82	200	J,K	BP	3	J,L,N	0.120	3	N/A
M49470X01824%B#	0.82	200	K,M	BX	5	J,L,N	0.240	3	N/A
M49470P01105%B#	1	200	J,K	BP	3	J,L,N	0.360	3	N/A
M49470X01105%B#	1	200	K,M	BX	5	J,L,N	0.240	3	N/A
M49470P01125%B#	1.2	200	J,K	BP	3	J,L,N	0.480	3	N/A
M49470X01125%B#	1.2	200	K,M	BX	5	J,L,N	0.240	3	N/A
M49470P01155%B#	1.5	200	J,K	BP	3	J,L,N	0.480	3	N/A
M49470X01155%B#	1.5	200	K,M	BX	5	J,L,N	0.360	3	N/A
M49470P01185%B#	1.8	200	J,K	BP	3	J,L,N	0.650	3	N/A
M49470X01185%B#	1.8	200	K,M	BX	5	J,L,N	0.360	3	N/A
M49470P01225%B#	2.2	200	J,K	BP	1	J,L,N	0.480	3	N/A
M49470X01225%B#	2.2	200	K,M	BX	5	J,L,N	0.480	3	N/A
M49470P01275%B#	2.7	200	J,K	BP	1	J,L,N	0.480	3	N/A
M49470X01275%B#	2.7	200	K,M	BX	5	J,L,N	0.480	3	N/A
M49470P01335%B#	3.3	200	J,K	BP	1	J,L,N	0.650	3	N/A
M49470X01335%B#	3.3	200	K,M	BX	5	J,L,N	0.650	3	N/A
M49470P01395%B#	3.9	200	J,K	BP	2	J,L,N	0.480	3	N/A
M49470X01395%B#	3.9	200	K,M	BX	4	J,L,N	0.360	3	N/A
M49470P01475%B#	4.7	200	J,K	BP	2	J,L,N	0.650	3	N/A
M49470X01475%B#	4.7	200	K,M	BX	4	J,L,N	0.360	3	N/A
M49470P01565%B#	5.6	200	J,K	BP	6	J,L,N	0.360	3	N/A
M49470X01565%B#	5.6	200	K,M	BX	4	J,L,N	0.480	3	N/A
M49470P01685%B#	6.8	200	J,K	BP	6	J,L,N	0.360	3	N/A
M49470X01685%B#	6.8	200	K,M	BX	4	J,L,N	0.480	3	N/A
M49470P01825%B#	8.2	200	J,K	BP	6	J,L,N	0.480	3	N/A
M49470X01825%B#	8.2	200	K,M	BX	4	J,L,N	0.650	3	N/A
M49470P01106%B#	10	200	J,K	BP	6	J,L,N	0.650	3	N/A
M49470X01106%B#	10	200	K,M	BX	3	J,L,N	0.240	3	N/A
M49470P01126%B#	12	200	J,K	BP	6	J,L,N	0.650	3	N/A
M49470X01126%B#	12	200	K,M	BX	3	J,L,N	0.240	3	N/A
M49470X01156%B#	15	200	K,M	BX	3	J,L,N	0.360	3	N/A
M49470X01186%B#	18	200	K,M	BX	3	J,L,N	0.360	3	N/A
M49470X01226%B#	22	200	K,M	BX	3	J,L,N	0.480	3	N/A
M49470X01276%B#	27	200	K,M	BX	3	J,L,N	0.650	3	N/A
M49470X01336%B#	33	200	K,M	BX	1	J,L,N	0.360	3	N/A
M49470X01396%B#	39	200	K,M	BX	1	J,L,N	0.480	3	N/A
M49470X01476%B#	47	200	K,M	BX	1	J,L,N	0.480	3	N/A
M49470X01566%B#	56	200	K,M	BX	1	J,L,N	0.650	3	N/A
M49470X01686%B#	68	200	K,M	BX	2	J,L,N	0.480	3	N/A
M49470X01826%B#	82	200	K,M	BX	2	J,L,N	0.650	3	N/A
M49470X01107%B#	100	200	K,M	BX	6	J,L,N	0.360	3	N/A

M49470X01127%B#	120	200	K,M	BX	6	J,L,N	0.360	3	N/A
M49470X01157%B#	150	200	K,M	BX	6	J,L,N	0.480	3	N/A
M49470X01187%B#	180	200	K,M	BX	6	J,L,N	0.650	3	N/A
M49470P01223%C#	0.022	500	J,K	BP	5	J,L,N	0.120	3	N/A
M49470P01273%C#	0.027	500	J,K	BP	5	J,L,N	0.240	3	N/A
M49470P01333%C#	0.033	500	J,K	BP	5	J,L,N	0.240	3	N/A
M49470P01393%C#	0.039	500	J,K	BP	5	J,L,N	0.240	3	N/A
M49470P01473%C#	0.047	500	J,K	BP	5	J,L,N	0.360	3	N/A
M49470P01563%C#	0.056	500	J,K	BP	5	J,L,N	0.360	3	N/A
M49470P01683%C#	0.068	500	J,K	BP	5	J,L,N	0.480	3	N/A
M49470P01823%C#	0.082	500	J,K	BP	5	J,L,N	0.480	3	N/A
M49470P01104%C#	0.1	500	J,K	BP	5	J,L,N	0.650	3	N/A
M49470P01124%C#	0.12	500	J,K	BP	4	J,L,N	0.360	3	N/A
M49470P01154%C#	0.15	500	J,K	BP	4	J,L,N	0.360	3	N/A
M49470P01184%C#	0.18	500	J,K	BP	4	J,L,N	0.480	3	N/A
M49470P01224%C#	0.22	500	J,K	BP	4	J,L,N	0.480	3	N/A
M49470P01274%C#	0.27	500	J,K	BP	4	J,L,N	0.650	3	N/A
M49470P01334%C#	0.33	500	J,K	BP	3	J,L,N	0.240	3	N/A
M49470P01394%C#	0.39	500	J,K	BP	3	J,L,N	0.240	3	N/A
M49470P01474%C#	0.47	500	J,K	BP	3	J,L,N	0.360	3	N/A
M49470R01474%C#	0.47	500	K,M	BR	5	J,L,N	0.240	3	N/A
M49470P01564%C#	0.56	500	J,K	BP	3	J,L,N	0.360	3	N/A
M49470R01564%C#	0.56	500	K,M	BR	5	J,L,N	0.240	3	N/A
M49470P01684%C#	0.68	500	J,K	BP	3	J,L,N	0.480	3	N/A
M49470R01684%C#	0.68	500	K,M	BR	5	J,L,N	0.360	3	N/A
M49470P01824%C#	0.82	500	J,K	BP	3	J,L,N	0.650	3	N/A
M49470R01824%C#	0.82	500	K,M	BR	5	J,L,N	0.360	3	N/A
M49470P01105%C#	1	500	J,K	BP	3	J,L,N	0.650	3	N/A
M49470R01105%C#	1	500	K,M	BR	5	J,L,N	0.480	3	N/A
M49470P01125%C#	1.2	500	J,K	BP	1	J,L,N	0.480	3	N/A
M49470R01125%C#	1.2	500	K,M	BR	5	J,L,N	0.480	3	N/A
M49470P01155%C#	1.5	500	J,K	BP	1	J,L,N	0.480	3	N/A
M49470R01155%C#	1.5	500	K,M	BR	5	J,L,N	0.650	3	N/A
M49470P01185%C#	1.8	500	J,K	BP	1	J,L,N	0.650	3	N/A
M49470R01185%C#	1.8	500	K,M	BR	4	J,L,N	0.360	3	N/A
M49470P01225%C#	2.2	500	J,K	BP	2	J,L,N	0.480	3	N/A
M49470R01225%C#	2.2	500	K,M	BR	4	J,L,N	0.360	3	N/A
M49470P01275%C#	2.7	500	J,K	BP	2	J,L,N	0.650	3	N/A
M49470R01275%C#	2.7	500	K,M	BR	4	J,L,N	0.480	3	N/A
M49470P01335%C#	3.3	500	J,K	BP	6	J,L,N	0.360	3	N/A
M49470R01335%C#	3.3	500	K,M	BR	4	J,L,N	0.480	3	N/A
M49470P01395%C#	3.9	500	J,K	BP	6	J,L,N	0.360	3	N/A
M49470R01395%C#	3.9	500	K,M	BR	4	J,L,N	0.650	3	N/A
M49470Q01224%E#	0.22	500	K,M	BQ	5	J,L,N	0.240	3	N/A
M49470P01274%E#	0.27	500	J,K	BP	3	J,L,N	0.360	3	N/A
M49470Q01274%E#	0.27	500	K,M	BQ	5	J,L,N	0.240	3	N/A
M49470P01334%E#	0.33	500	J,K	BP	3	J,L,N	0.480	3	N/A

M49470Q01334%E#	0.33	500	K,M	BQ	5	J,L,N	0.360	3	N/A
M49470P01394%E#	0.39	500	J,K	BP	3	J,L,N	0.650	3	N/A
M49470Q01394%E#	0.39	500	K,M	BQ	5	J,L,N	0.360	3	N/A
M49470P01474%E#	0.47	500	J,K	BP	1	J,L,N	0.360	3	N/A
M49470Q01474%E#	0.47	500	K,M	BQ	5	J,L,N	0.360	3	N/A
M49470P01564%E#	0.56	500	J,K	BP	1	J,L,N	0.480	3	N/A
M49470Q01564%E#	0.56	500	K,M	BQ	5	J,L,N	0.480	3	N/A
M49470P01684%E#	0.68	500	J,K	BP	1	J,L,N	0.480	3	N/A
M49470Q01684%E#	0.68	500	K,M	BQ	5	J,L,N	0.650	3	N/A
M49470P01824%E#	0.82	500	J,K	BP	1	J,L,N	0.650	3	N/A
M49470Q01824%E#	0.82	500	K,M	BQ	4	J,L,N	0.360	3	N/A
M49470P01105%E#	1	500	J,K	BP	2	J,L,N	0.480	3	N/A
M49470Q01105%E#	1	500	K,M	BQ	4	J,L,N	0.360	3	N/A
M49470P01125%E#	1.2	500	J,K	BP	2	J,L,N	0.650	3	N/A
M49470Q01125%E#	1.2	500	K,M	BQ	4	J,L,N	0.360	3	N/A
M49470P01155%E#	1.5	500	J,K	BP	6	J,L,N	0.360	3	N/A
M49470Q01155%E#	1.5	500	K,M	BQ	4	J,L,N	0.480	3	N/A
M49470P01185%E#	1.8	500	J,K	BP	6	J,L,N	0.480	3	N/A
M49470Q01185%E#	1.8	500	K,M	BQ	4	J,L,N	0.650	3	N/A
M49470P01225%E#	2.2	500	J,K	BP	6	J,L,N	0.650	3	N/A
M49470Q01225%E#	2.2	500	K,M	BQ	3	J,L,N	0.240	3	N/A
M49470Q01275%E#	2.7	500	K,M	BQ	3	J,L,N	0.360	3	N/A
M49470Q01335%E#	3.3	500	K,M	BQ	3	J,L,N	0.360	3	N/A
M49470Q01395%E#	3.9	500	K,M	BQ	3	J,L,N	0.360	3	N/A
M49470Q01475%E#	4.7	500	K,M	BQ	3	J,L,N	0.480	3	N/A
M49470Q01565%E#	5.6	500	K,M	BQ	3	J,L,N	0.650	3	N/A
M49470Q01685%E#	6.8	500	K,M	BQ	1	J,L,N	0.480	3	N/A
M49470Q01825%E#	8.2	500	K,M	BQ	1	J,L,N	0.480	3	N/A
M49470Q01106%E#	10	500	K,M	BQ	1	J,L,N	0.480	3	N/A
M49470Q01126%E#	12	500	K,M	BQ	1	J,L,N	0.650	3	N/A
M49470Q01156%E#	15	500	K,M	BQ	2	J,L,N	0.650	3	N/A
M49470Q01186%E#	18	500	K,M	BQ	2	J,L,N	0.650	3	N/A
M49470Q01226%E#	22	500	K,M	BQ	6	J,L,N	0.360	3	N/A
M49470Q01276%E#	27	500	K,M	BQ	6	J,L,N	0.360	3	N/A
M49470Q01336%E#	33	500	K,M	BQ	6	J,L,N	0.480	3	N/A
M49470Q01396%E#	39	500	K,M	BQ	6	J,L,N	0.650	3	N/A

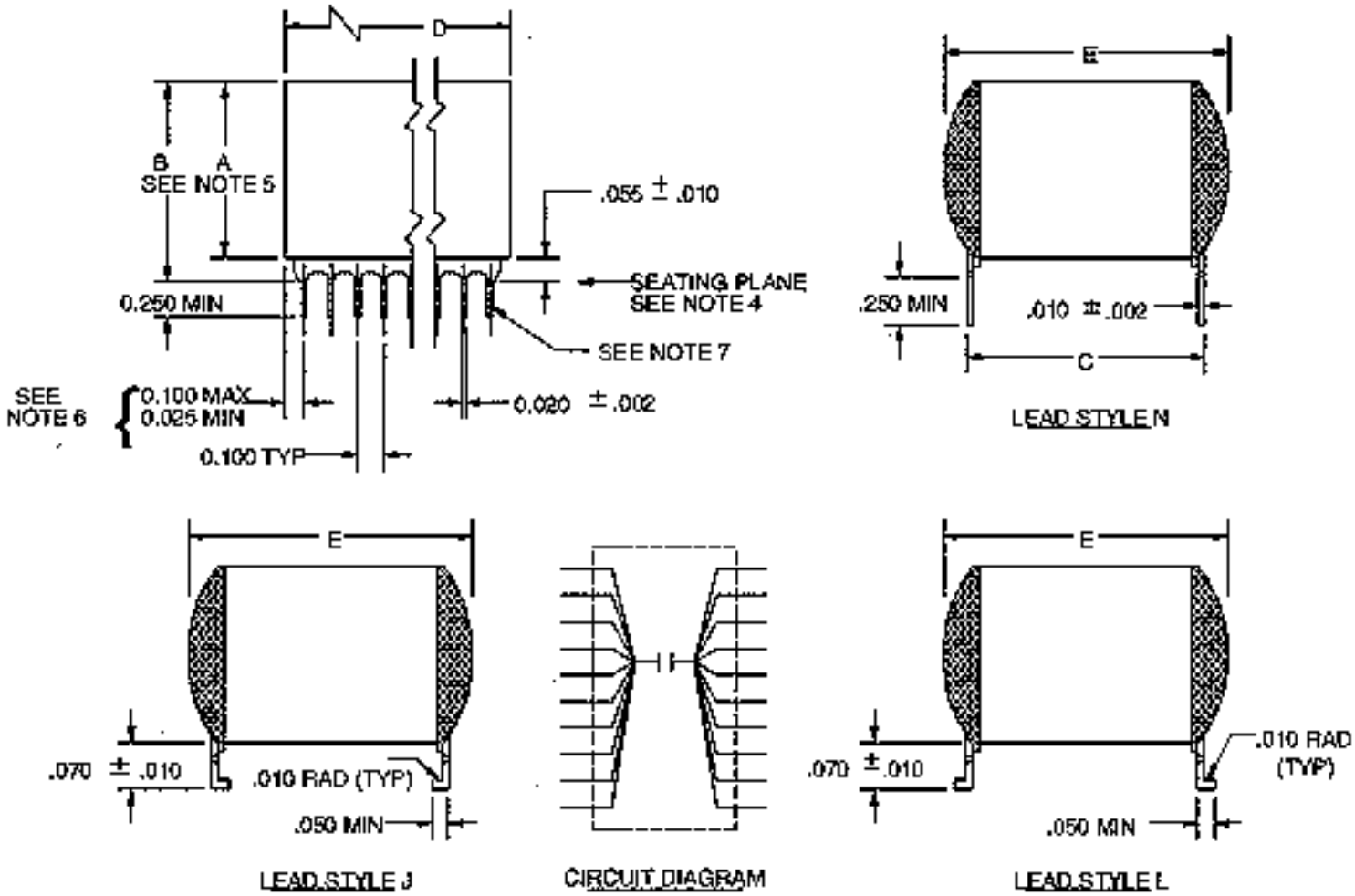

Physical Dimensions Table

Case Code	C +/- 0.025	D (Min)	D (Max)	E (Max)	Number of Pins per Side
1	0.450	1.950	2.075	0.500	20
2	0.800	1.450	1.535	0.870	15
3	0.450	0.950	1.075	0.500	10

4	0.400	0.350	0.425	0.440	4
5	0.250	0.224	0.275	0.300	3
6	1.250	1.950	2.075	1.350	20

Notes:

1) Dimensions are in inches.

2) Metric equivalents are given for general information only.

3) Unless otherwise specified, tolerances are +/-0.010 inches.

4) Lead frame configuration is shown as typical above the seating plane.

5) See the part list table for specific maximum A dimension. For maximum B dimension, add 0.065 inches to the appropriate A dimension. For all lead styles, the number of chips is determined by the capacitance and voltage rating.

6) For case code 5, dimensions shall be 0.100 inches maximum, 0.012 inches minimum.

7) Lead alignment within pin rows shall be within +/-0.005 inches.

MIL-PRF-49470/1 Ceramic Switch Mode Power Supply (SMPS) Capacitors, 50 V Rated

Part Number	Capacitance (uF)	Rated Volt (V)	Cap. Tol. (%)	Temp. Char.	Case Code	Lead Style (#)	Max. "A" Dimension	Level 1 (*)	Level 2 (*)	Manufacturer
*49470X01105%A#	1.0	50	K,M	BX	5	N,L,M,J,K	0.120	T	M	AVX1,PRE
*49470 X01125%A#	1.2	50	K,M	BX	5	N,L,M,J,K	0.120	T	M	AVX1,PRE
*49470 X01155%A#	1.5	50	K,M	BX	5	N,L,M,J,K	0.240	T	M	AVX1,PRE
*49470 X01185%A#	1.8	50	K,M	BX	5	N,L,M,J,K	0.240	T	M	AVX1,PRE
*49470 X01225%A#	2.2	50	K,M	BX	5	N,L,M,J,K	0.240	T	M	AVX1,PRE
*49470 X01275%A#	2.7	50	K,M	BX	5	N,L,M,J,K	0.360	T	M	AVX1,PRE
*49470 X01335%A#	3.3	50	K,M	BX	5	N,L,M,J,K	0.360	T	M	AVX1,PRE
*49470 X01395%A#	3.9	50	K,M	BX	5	N,L,M,J,K	0.480	T	M	AVX1,PRE
*49470 X01475%A#	4.7	50	K,M	BX	5	N,L,M,J,K	0.480	T	M	AVX1,PRE
*49470 X01475%A#	4.7	50	K,M	BX	4	A,B,C,D,F	0.240	T	M	AVX1,PRE
*49470 X01565%A#	5.6	50	K,M	BX	5	N,L,M,J,K	0.650	T	M	AVX1,PRE
*49470 X01565%A#	5.6	50	K,M	BX	4	A,B,C,D,F	0.240	T	M	AVX1,PRE
*49470 X01685%A#	6.8	50	K,M	BX	4	N,L,M,J,K	0.360	T	M	AVX1,PRE
*49470 X01825%A#	8.2	50	K,M	BX	4	N,L,M,J,K	0.360	T	M	AVX1,PRE
*49470 X01106%A#	10	50	K,M	BX	4	N,L,M,J,K	0.480	T	M	AVX1,PRE
*49470 X01126%A#	12	50	K,M	BX	4	N,L,M,J,K	0.480	T	M	AVX1,PRE
*49470 X01156%A#	15	50	K,M	BX	4	N,L,M,J,K	0.650	T	M	AVX1,PRE
*49470 X01156%A#	15	50	K,M	BX	3	A,B,C,D,F	0.240	T	M	AVX1,PRE
*49470 X01186%A#	18	50	K,M	BX	3	N,L,M,J,K	0.240	T	M	AVX1,PRE
*49470 X01226%A#	22	50	K,M	BX	3	N,L,M,J,K	0.360	T	M	AVX1,PRE
*49470 X01276%A#	27	50	K,M	BX	3	N,L,M,J,K	0.360	T	M	AVX1,PRE
*49470 X01336%A#	33	50	K,M	BX	3	N,L,M,J,K	0.360	T	M	AVX1,PRE
*49470 X01396%A#	39	50	K,M	BX	3	N,L,M,J,K	0.480	T	M	AVX1,PRE
*49470 X01476%A#	47	50	K,M	BX	3	N,L,M,J,K	0.650	T	M	AVX1,PRE
*49470 X01476%A#	47	50	K,M	BX	2	A,B,C,D,F	0.240	-	M	AVX1
*49470 X01566%A#	56	50	K,M	BX	1	N,L,M,J,K	0.360	-	M	AVX1
*49470 X01566%A#	56	50	K,M	BX	2	A,B,C,D,F	0.240	-	M	AVX1
*49470 X01686%A#	68	50	K,M	BX	1	N,L,M,J,K	0.480	-	M	AVX1

*49470 X01686%A#	68	50	K,M	BX	2	A,B,C,D,F	0.360	-	M	AVX1
*49470 X01826%A#	82	50	K,M	BX	1	N,L,M,J,K	0.480	-	M	AVX1
*49470 X01826%A#	82	50	K,M	BX	2	A,B,C,D,F	0.360	-	M	AVX1
*49470 X01107%A#	100	50	K,M	BX	1	N,L,M,J,K	0.650	-	M	AVX1
*49470 X01107%A#	100	50	K,M	BX	2	A,B,C,D,F	0.480	-	M	AVX1
*49470 X01127%A#	120	50	K,M	BX	2	N,L,M,J,K	0.480	-	M	AVX1
*49470 X01157%A#	150	50	K,M	BX	2	N,L,M,J,K	0.650	-	M	AVX1
*49470 X01187%A#	180	50	K,M	BX	6	N,L,M,J,K	0.480	-	M	AVX1
*49470 X01227%A#	220	50	K,M	BX	6	N,L,M,J,K	0.480	-	M	AVX1
*49470 X01277%A#	270	50	K,M	BX	6	N,L,M,J,K	0.650	-	M	AVX1

MIL-PRF-49470/1 Ceramic Switch Mode Power Supply (SMPS) Capacitors, 100 V Rated

Part Number	Capacitance (uF)	Rated Volt (V)	Cap. Tol. (%)	Temp. Char.	Case Code	Lead Style (#)	Max. "A" Dimension	Level 1 (*)	Level 2 (*)	Manufacturer
*49470X01684%B#	0.680	100	K,M	BX	5	N,L,M,J,K	0.120	T	M	AVX1,PRE,JDI
*49470X01824%B#	0.820	100	K,M	BX	5	N,L,M,J,K	0.240	T	M	AVX1,PRE,JDI
*49470X01105%B#	1.0	100	K,M	BX	5	N,L,M,J,K	0.240	T	M	AVX1,PRE,JDI
*49470X01125%B#	1.2	100	K,M	BX	5	N,L,M,J,K	0.240	T	M	AVX1,PRE,JDI
*49470X01155%B#	1.5	100	K,M	BX	5	N,L,M,J,K	0.360	T	M	AVX1,PRE,JDI
*49470X01185%B#	1.8	100	K,M	BX	5	N,L,M,J,K	0.360	T	M	AVX1,PRE,JDI
*49470X01225%B#	2.2	100	K,M	BX	5	N,L,M,J,K	0.480	T	M	AVX1,PRE,JDI
*49470X01225%B#	2.2	100	K,M	BX	4	A,B,D,C,F	0.240	T	M	AVX1,PRE,JDI
*49470X01275%B#	2.7	100	K,M	BX	5	N,L,M,J,K	0.480	T	M	AVX1,PRE,JDI
*49470X01335%B#	3.3	100	K,M	BX	5	N,L,M,J,K	0.650	T	M	AVX1,PRE,JDI
*49470X01335%B#	3.3	100	K,M	BX	4	A,B,D,C,F	0.240	T	M	AVX1,PRE,JDI
*49470X01395%B#	3.9	100	K,M	BX	4	N,L,M,J,K	0.360	T	M	AVX1,PRE,JDI
*49470X01475%B#	4.7	100	K,M	BX	4	N,L,M,J,K	0.360	T	M	AVX1,PRE,JDI
*49470X01565%B#	5.6	100	K,M	BX	4	N,L,M,J,K	0.480	T	M	AVX1,PRE,JDI
*49470X01685%B#	6.8	100	K,M	BX	4	N,L,M,J,K	0.480	T	M	AVX1,PRE,JDI
*49470X01825%B#	8.2	100	K,M	BX	4	N,L,M,J,K	0.650	T	M	AVX1,PRE,JDI
*49470X01825%B#	8.2	100	K,M	BX	3	A,B,D,C,F	0.240	T	M	AVX1,PRE,JDI
*49470X01106%B#	10	100	K,M	BX	3	N,L,M,J,K	0.240	T	M	AVX1,PRE,JDI
*49470X01126%B#	12	100	K,M	BX	3	N,L,M,J,K	0.240	T	M	AVX1,PRE,JDI
*49470X01156%B#	15	100	K,M	BX	3	N,L,M,J,K	0.360	T	M	AVX1,PRE,JDI
*49470X01186%B#	18	100	K,M	BX	3	N,L,M,J,K	0.360	T	M	AVX1,PRE,JDI
*49470X01226%B#	22	100	K,M	BX	3	N,L,M,J,K	0.480	T	M	AVX1,PRE,JDI
*49470X01276%B#	27	100	K,M	BX	3	N,L,M,J,K	0.650	T	M	AVX1,PRE,JDI
*49470X01276%B#	27	100	K,M	BX	2	A,B,D,C,F	0.240	-	M	AVX1
*49470X01336%B#	33	100	K,M	BX	1	N,L,M,J,K	0.360	-	M	AVX1
*49470X01336%B#	33	100	K,M	BX	2	A,B,D,C,F	0.240	-	M	AVX1
*49470X01396%B#	39	100	K,M	BX	1	N,L,M,J,K	0.480	-	M	AVX1
*49470X01396%B#	39	100	K,M	BX	2	A,B,D,C,F	0.360	-	M	AVX1
*49470X01476%B#	47	100	K,M	BX	1	N,L,M,J,K	0.480	-	M	AVX1
*49470X01476%B#	47	100	K,M	BX	2	A,B,D,C,F	0.360	-	M	AVX1
*49470X01566%B#	56	100	K,M	BX	1	N,L,M,J,K	0.650	-	M	AVX1

*49470X01686%B#	68	100	K,M	BX	2	N,L,M,J,K	0.480	-	M	AVX1
*49470X01826%B#	82	100	K,M	BX	2	N,L,M,J,K	0.650	-	M	AVX1
*49470X01107%B#	100	100	K,M	BX	6	N,L,M,J,K	0.360	-	M	AVX1
*49470X01127%B#	120	100	K,M	BX	6	N,L,M,J,K	0.360	-	M	AVX1
*49470X01157%B#	150	100	K,M	BX	6	N,L,M,J,K	0.480	-	M	AVX1
*49470X01187%B#	180	100	K,M	BX	6	N,L,M,J,K	0.650	-	M	AVX1

MIL-PRF-49470/1 Ceramic Switch Mode Power Supply (SMPS) Capacitors, 200 V Rated

Part Number	Capacitance (uF)	Rated Volt (V)	Cap. Tol. (%)	Temp. Char.	Case Code	Lead Style (#)	Max. "A" Dimension	Level 1 (*)	Level 2 (*)	Manufacturer
*49470R01474%C#	0.470	200	K,M	BR	5	N,L,M,J,K	0.240	T	M	AVX1,PRE,JDI
*49470R01564%C#	0.560	200	K,M	BR	5	N,L,M,J,K	0.240	T	M	AVX1,PRE,JDI
*49470R01684%C#	0.680	200	K,M	BR	5	N,L,M,J,K	0.360	T	M	AVX1,PRE,JDI
*49470R01824%C#	0.820	200	K,M	BR	5	N,L,M,J,K	0.360	T	M	AVX1,PRE,JDI
*49470R01105%C#	1.0	200	K,M	BR	5	N,L,M,J,K	0.480	T	M	AVX1,PRE,JDI
*49470R01105%C#	1.0	200	K,M	BR	4	A,B,D,C,F	0.120	T	M	AVX1,PRE,JDI
*49470R01125%C#	1.2	200	K,M	BR	5	N,L,M,J,K	0.480	T	M	AVX1,PRE,JDI
*49470R01125%C#	1.2	200	K,M	BR	4	A,B,D,C,F	0.240	T	M	AVX1,PRE,JDI
*49470R01155%C#	1.5	200	K,M	BR	5	N,L,M,J,K	0.650	T	M	AVX1,PRE,JDI
*49470R01155%C#	1.5	200	K,M	BR	4	A,B,D,C,F	0.240	T	M	AVX1,PRE,JDI
*49470R01185%C#	1.8	200	K,M	BR	4	N,L,M,J,K	0.360	T	M	AVX1,PRE,JDI
*49470R01225%C#	2.2	200	K,M	BR	4	N,L,M,J,K	0.360	T	M	AVX1,PRE,JDI
*49470R01275%C#	2.7	200	K,M	BR	4	N,L,M,J,K	0.480	T	M	AVX1,PRE,JDI
*49470R01335%C#	3.3	200	K,M	BR	4	N,L,M,J,K	0.480	T	M	AVX1,PRE,JDI
*49470R01395%C#	3.9	200	K,M	BR	4	N,L,M,J,K	0.650	T	M	AVX1,PRE,JDI
*49470R01395%C#	3.9	200	K,M	BR	3	A,B,D,C,F	0.240	T	M	AVX1,PRE,JDI
*49470R01475%C#	4.7	200	K,M	BR	3	N,L,M,J,K	0.240	T	M	AVX1,PRE,JDI
*49470R01565%C#	5.6	200	K,M	BR	3	N,L,M,J,K	0.240	T	M	AVX1,PRE,JDI
*49470R01685%C#	6.8	200	K,M	BR	3	N,L,M,J,K	0.360	T	M	AVX1,PRE,JDI
*49470R01825%C#	8.2	200	K,M	BR	3	N,L,M,J,K	0.360	T	M	AVX1,PRE,JDI
*49470R01106%C#	10	200	K,M	BR	3	N,L,M,J,K	0.480	T	M	AVX1,PRE,JDI
*49470R01126%C#	12	200	K,M	BR	3	N,L,M,J,K	0.650	T	M	AVX1,PRE,JDI
*49470R01156%C#	15	200	K,M	BR	1	N,L,M,J,K	0.360	--	M	AVX1
*49470R01156%C#	15	200	K,M	BR	2	A,B,D,C,F	0.240	--	M	AVX1
*49470R01186%C#	18	200	K,M	BR	1	N,L,M,J,K	0.480	--	M	AVX1
*49470R01186%C#	18	200	K,M	BR	2	A,B,D,C,F	0.360	--	M	AVX1
*49470R01226%C#	22	200	K,M	BR	1	N,L,M,J,K	0.650	--	M	AVX1
*49470R01226%C#	22	200	K,M	BR	2	A,B,D,C,F	0.360	--	M	AVX1
*49470R01276%C#	27	200	K,M	BR	1	N,L,M,J,K	0.650	--	M	AVX1
*49470R01276%C#	27	200	K,M	BR	2	A,B,D,C,F	0.480	--	M	AVX1
*49470R01336%C#	33	200	K,M	BR	2	N,L,M,J,K	0.480	--	M	AVX1
*49470R01396%C#	39	200	K,M	BR	2	N,L,M,J,K	0.650	--	M	AVX1
*49470R01476%C#	47	200	K,M	BR	6	N,L,M,J,K	0.240	--	M	AVX1
*49470R01566%C#	56	200	K,M	BR	6	N,L,M,J,K	0.360	--	M	AVX1
*49470R01686%C#	68	200	K,M	BR	6	N,L,M,J,K	0.360	--	M	AVX1

*49470R01826%C#	82	200	K,M	BR	6	N,L,M,J,K	0.480	--	M	AVX1
*49470R01107%C#	100	200	K,M	BR	6	N,L,M,J,K	0.650	--	M	AVX1
*49470R01127%C#	120	200	K,M	BR	6	N,L,M,J,K	0.650	--	M	AVX1

MIL-PRF-49470/1 Ceramic Switch Mode Power Supply (SMPS) Capacitors, 500 V Rated

Part Number	Capacitance (uF)	Rated Volt< (V)	Cap. Tol. (%)	Temp. Char.	Case Code	Lead Style (#)	Max. "A" Dimension	Level 1 (*)	Level 2 (*)	Manufacturer
*49470Q01154%E#	0.15	500	K,M	BQ	5	N,L,M,J,K	0.120	T	M	AVX1,PRE
*49470Q01184%E#	0.18	500	K,M	BQ	5	N,L,M,J,K	0.240	T	M	AVX1,PRE
*49470Q01224%E#	0.22	500	K,M	BQ	5	N,L,M,J,K	0.240	T	M	AVX1,PRE
*49470Q01274%E#	0.27	500	K,M	BQ	5	N,L,M,J,K	0.240	T	M	AVX1,PRE
*49470Q01334%E#	0.33	500	K,M	BQ	5	N,L,M,J,K	0.360	T	M	AVX1,PRE
*49470Q01394%E#	0.39	500	K,M	BQ	5	N,L,M,J,K	0.360	T	M	AVX1,PRE
*49470Q01474%E#	0.47	500	K,M	BQ	5	N,L,M,J,K	0.360	T	M	AVX1,PRE
*49470Q01564%E#	0.56	500	K,M	BQ	5	N,L,M,J,K	0.480	T	M	AVX1,PRE
*49470Q01564%E#	0.56	500	K,M	BQ	4	A,B,D,C,F	0.240	T	M	AVX1,PRE
*49470Q01684%E#	0.68	500	K,M	BQ	5	N,L,M,J,K	0.650	T	M	AVX1,PRE
*49470Q01684%E#	0.68	500	K,M	BQ	4	A,B,D,C,F	0.240	T	M	AVX1,PRE
*49470Q01824%E#	0.82	500	K,M	BQ	4	N,L,M,J,K	0.360	T	M	AVX1,PRE
*49470Q01105%E#	1	500	K,M	BQ	4	N,L,M,J,K	0.360	T	M	AVX1,PRE
*49470Q01125%E#	1.2	500	K,M	BQ	4	N,L,M,J,K	0.360	T	M	AVX1,PRE
*49470Q01155%E#	1.5	500	K,M	BQ	4	N,L,M,J,K	0.480	T	M	AVX1,PRE
*49470Q01185%E#	1.8	500	K,M	BQ	4	N,L,M,J,K	0.650	T	M	AVX1,PRE
*49470Q01185%E#	1.8	500	K,M	BQ	3	A,B,D,C,F	0.240	T	M	AVX1,PRE
*49470Q01225%E#	2.2	500	K,M	BQ	3	N,L,M,J,K	0.240	T	M	AVX1,PRE
*49470Q01275%E#	2.7	500	K,M	BQ	3	N,L,M,J,K	0.360	T	M	AVX1,PRE
*49470Q01335%E#	3.3	500	K,M	BQ	3	N,L,M,J,K	0.360	T	M	AVX1,PRE
*49470Q01395%E#	3.9	500	K,M	BQ	3	N,L,M,J,K	0.360	T	M	AVX1,PRE
*49470Q01475%E#	4.7	500	K,M	BQ	3	N,L,M,J,K	0.480	T	M	AVX1,PRE
*49470Q01565%E#	5.6	500	K,M	BQ	3	N,L,M,J,K	0.650	T	M	AVX1,PRE
*49470Q01565%E#	5.6	500	K,M	BQ	2	A,B,D,C,F	0.240	--	M	AVX1
*49470Q01685%E#	6.8	500	K,M	BQ	1	N,L,M,J,K	0.480	--	M	AVX1
*49470Q01685%E#	6.8	500	K,M	BQ	2	A,B,D,C,F	0.240	--	M	AVX1
*49470Q01825%E#	8.2	500	K,M	BQ	1	N,L,M,J,K	0.480	--	M	AVX1
*49470Q01825%E#	8.2	500	K,M	BQ	2	A,B,D,C,F	0.360	--	M	AVX1
*49470Q01106%E#	10	500	K,M	BQ	1	N,L,M,J,K	0.480	--	M	AVX1
*49470Q01106%E#	10	500	K,M	BQ	2	A,B,D,C,F	0.360	--	M	AVX1
*49470Q01126%E#	12	500	K,M	BQ	1	N,L,M,J,K	0.650	--	M	AVX1
*49470Q01126%E#	12	500	K,M	BQ	2	A,B,D,C,F	0.480	--	M	AVX1
*49470Q01156%E#	15	500	K,M	BQ	2	N,L,M,J,K	0.650	--	M	AVX1
*49470Q01186%E#	18	500	K,M	BQ	2	N,L,M,J,K	0.650	--	M	AVX1
*49470Q01226%E#	22	500	K,M	BQ	6	N,L,M,J,K	0.360	--	M	AVX1
*49470Q01276%E#	27	500	K,M	BQ	6	N,L,M,J,K	0.360	--	M	AVX1
*49470Q01336%E#	33	500	K,M	BQ	6	N,L,M,J,K	0.480	--	M	AVX1
*49470Q01396%E#	39	500	K,M	BQ	6	N,L,M,J,K	0.650	--	M	AVX1

Part Number	Capacitance (uF)	Rated Volt (V)	Cap. Tol. (%)	Temp. Char.	Case Code	Lead Style (#)	Max. "A" Dimension	Level	Manufacturer
M49470P01563%A#	0.056	50	J,K	BP	5	J,L,N	0.120	3	N/A
M49470P01683%A#	0.068	50	J,K	BP	5	J,L,N	0.240	3	N/A
M49470P01823%A#	0.082	50	J,K	BP	5	J,L,N	0.240	3	N/A
M49470P01104%A#	0.1	50	J,K	BP	5	J,L,N	0.240	3	N/A
M49470P01124%A#	0.12	50	J,K	BP	5	J,L,N	0.360	3	N/A
M49470P01154%A#	0.15	50	J,K	BP	5	J,L,N	0.360	3	N/A
M49470P01184%A#	0.180	50	J,K	BP	5	J,L,N	0.480	3	N/A
M49470P01224%A#	0.220	50	J,K	BP	5	J,L,N	0.480	3	N/A
M49470P01274%A#	0.270	50	J,K	BP	5	J,L,N	0.650	3	N/A
M49470P01334%A#	0.330	50	J,K	BP	4	J,L,N	0.360	3	N/A
M49470P01394%A#	0.390	50	J,K	BP	4	J,L,N	0.480	3	N/A
M49470P01474%A#	0.470	50	J,K	BP	4	J,L,N	0.480	3	N/A
M49470P01564%A#	0.560	50	J,K	BP	4	J,L,N	0.650	3	N/A
M49470P01684%A#	0.680	50	J,K	BP	3	J,L,N	0.240	3	N/A
M49470P01824%A#	0.820	50	J,K	BP	3	J,L,N	0.240	3	N/A
M49470P01105%A#	1.0	50	J,K	BP	3	J,L,N	0.360	3	N/A
M49470X01105%A#	1.0	50	K,M	BX	5	J,L,N	0.120	3	N/A
M49470P01125%A#	1.2	50	J,K	BP	3	J,L,N	0.360	3	N/A
M49470X01125%A#	1.2	50	K,M	BX	5	J,L,N	0.120	3	N/A
M49470P01155%A#	1.5	50	J,K	BP	3	J,L,N	0.480	3	N/A
M49470X01155%A#	1.5	50	K,M	BX	5	J,L,N	0.240	3	N/A
M49470P01185%A#	1.8	50	J,K	BP	3	J,L,N	0.480	3	N/A
M49470X01185%A#	1.8	50	K,M	BX	5	J,L,N	0.240	3	N/A
M49470P01225%A#	2.2	50	J,K	BP	3	J,L,N	0.650	3	N/A
M49470X01225%A#	2.2	50	K,M	BX	5	J,L,N	0.240	3	N/A
M49470P01275%A#	2.7	50	J,K	BP	1	J,L,N	0.360	3	N/A
M49470X01275%A#	2.7	50	K,M	BX	5	J,L,N	0.360	3	N/A
M49470P01335%A#	3.3	50	J,K	BP	1	J,L,N	0.480	3	N/A
M49470X01335%A#	3.3	50	K,M	BX	5	J,L,N	0.360	3	N/A
M49470P01395%A#	3.9	50	J,M	BP	1	J,L,N	0.480	3	N/A
M49470X01395%A#	3.9	50	K,M	BX	5	J,L,N	0.480	3	N/A
M49470P01475%A#	4.7	50	J,M	BP	1	J,L,N	0.650	3	N/A
M49470X01475%A#	4.7	50	K,M	BX	5	J,L,N	0.480	3	N/A
M49470P01565%A#	5.6	50	J,K	BP	2	J,L,N	0.650	3	N/A
M49470X01565%A#	5.6	50	K,M	BX	5	J,L,N	0.650	3	N/A
M49470P01685%A#	6.8	50	J,K	BP	6	J,L,N	0.360	3	N/A
M49470X01685%A#	6.8	50	K,M	BX	4	J,L,N	0.360	3	N/A
M49470P01825%A#	8.2	50	J,K	BP	6	J,L,N	0.360	3	N/A
M49470X01825%A#	8.2	50	K,M	BX	4	J,L,N	0.360	3	N/A
M49470P01106%A#	10	50	J,K	BP	6	J,L,N	0.480	3	N/A
M49470P01473%A#	0.047	100	J,K	BP	5	J,L,N	0.120	3	AVX

M49470P01563%A#	0.056	100	J,K	BP	5	J,L,N	0.120	3	AVX
M49470P01683%A#	0.068	100	J,K	BP	5	J,L,N	0.240	3	AVX
M49470P01823%A#	0.082	100	J,K	BP	5	J,L,N	0.240	3	AVX
M49470P01104%A#	0.1	100	J,K	BP	5	J,L,N	0.240	3	AVX
M49470P01124%A#	0.12	100	J,K	BP	5	J,L,N	0.360	3	AVX
M49470P01154%A#	0.15	100	J,K	BP	5	J,L,N	0.360	3	AVX
M49470P01184%A#	0.180	100	J,K	BP	5	J,L,N	0.480	3	AVX
M49470P01224%A#	0.220	100	J,K	BP	5	J,L,N	0.480	3	AVX
M49470P01274%A#	0.270	100	J,K	BP	5	J,L,N	0.650	3	AVX
M49470P01334%A#	0.330	100	J,K	BP	4	J,L,N	0.360	3	AVX
M49470P01394%A#	0.390	100	J,K	BP	4	J,L,N	0.480	3	AVX
M49470P01474%A#	0.470	100	J,K	BP	4	J,L,N	0.480	3	AVX
M49470P01564%A#	0.560	100	J,K	BP	4	J,L,N	0.650	3	AVX
M49470P01684%A#	0.680	100	J,K	BP	3	J,L,N	0.240	3	AVX
M49470P01824%A#	0.820	100	J,K	BP	3	J,L,N	0.240	3	AVX
M49470P01105%A#	1.0	100	J,K	BP	3	J,L,N	0.360	3	AVX
M49470X01105%A#	1.0	100	K,M	BX	5	J,L,N	0.120	3	AVX
M49470P01125%A#	1.2	100	J,K	BP	3	J,L,N	0.360	3	AVX
M49470X01125%A#	1.2	100	K,M	BX	5	J,L,N	0.120	3	AVX
M49470P01155%A#	1.5	100	J,K	BP	3	J,L,N	0.480	3	AVX
M49470X01155%A#	1.5	100	K,M	BX	5	J,L,N	0.240	3	AVX
M49470P01185%A#	1.8	100	J,K	BP	3	J,L,N	0.480	3	AVX
M49470X01185%A#	1.8	100	K,M	BX	5	J,L,N	0.240	3	AVX
M49470P01225%A#	2.2	100	J,K	BP	3	J,L,N	0.650	3	AVX
M49470X01225%A#	2.2	100	K,M	BX	5	J,L,N	0.240	3	AVX
M49470P01275%A#	2.7	100	J,K	BP	1	J,L,N	0.360	3	AVX
M49470X01275%A#	2.7	100	K,M	BX	5	J,L,N	0.360	3	AVX
M49470P01335%A#	3.3	100	J,K	BP	1	J,L,N	0.480	3	AVX
M49470X01335%A#	3.3	100	K,M	BX	5	J,L,N	0.360	3	AVX
M49470P01395%A#	3.9	100	J,M	BP	1	J,L,N	0.480	3	AVX
M49470X01395%A#	3.9	100	K,M	BX	5	J,L,N	0.480	3	AVX
M49470P01475%A#	4.7	100	J,M	BP	1	J,L,N	0.650	3	AVX
M49470X01475%A#	4.7	100	K,M	BX	5	J,L,N	0.480	3	AVX
M49470P01565%A#	5.6	100	J,K	BP	2	J,L,N	0.650	3	AVX
M49470X01565%A#	5.6	100	K,M	BX	5	J,L,N	0.650	3	AVX
M49470P01685%A#	6.8	100	J,K	BP	6	J,L,N	0.360	3	AVX
M49470X01685%A#	6.8	100	K,M	BX	4	J,L,N	0.360	3	AVX
M49470P01825%A#	8.2	100	J,K	BP	6	J,L,N	0.360	3	AVX
M49470X01825%A#	8.2	100	K,M	BX	4	J,L,N	0.360	3	AVX
M49470P01106%A#	10	100	J,K	BP	6	J,L,N	0.480	3	AVX
M49470X01106%A#	10	100	K,M	BX	4	J,L,N	0.480	3	AVX
M49470P01126%A#	12	100	J,K	BP	6	J,L,N	0.480	3	AVX
M49470X01126%A#	12	100	K,M	BX	4	J,L,N	0.480	3	AVX
M49470P01156%A#	15	100	J,K	BP	6	J,L,N	0.650	3	AVX
M49470X01156%A#	15	100	K,M	BX	4	J,L,N	0.650	3	AVX
M49470X01186%A#	18	100	K,M	BX	3	J,L,N	0.240	3	AVX
M49470X01226%A#	22	100	K,M	BX	3	J,L,N	0.360	3	AVX

M49470X01276%A#	27	100	K,M	BX	3	J,L,N	0.360	3	AVX
M49470X01336%A#	33	100	K,M	BX	3	J,L,N	0.360	3	AVX
M49470X01396%A#	39	100	K,M	BX	3	J,L,N	0.480	3	AVX
M49470X01476%A#	47	100	K,M	BX	3	J,L,N	0.650	3	AVX
M49470X01566%A#	56	100	K,M	BX	1	J,L,N	0.360	3	AVX
M49470X01686%A#	68	100	K,M	BX	1	J,L,N	0.480	3	AVX
M49470X01826%A#	82	100	K,M	BX	1	J,L,N	0.480	3	AVX
M49470X01107%A#	100	100	K,M	BX	1	J,L,N	0.650	3	AVX
M49470X01127%A#	120	100	K,M	BX	2	J,L,N	0.480	3	AVX
M49470X01157%A#	150	100	K,M	BX	2	J,L,N	0.650	3	AVX
M49470X01187%A#	180	100	K,M	BX	6	J,L,N	0.480	3	AVX
M49470X01227%A#	220	100	K,M	BX	6	J,L,N	0.480	3	AVX
M49470X01277%A#	270	100	K,M	BX	6	J,L,N	0.650	3	AVX
M49470P01473%B#	0.047	200	J,K	BP	5	J,L,N	0.240	3	N/A
M49470P01563%B#	0.056	200	J,K	BP	5	J,L,N	0.240	3	N/A
M49470P01683%B#	0.068	200	J,K	BP	5	J,L,N	0.240	3	N/A
M49470P01823%B#	0.082	200	J,K	BP	5	J,L,N	0.240	3	N/A
M49470P01104%B#	0.1	200	J,K	BP	5	J,L,N	0.360	3	N/A
M49470P01124%B#	0.12	200	J,K	BP	5	J,L,N	0.360	3	N/A
M49470P01154%B#	0.15	200	J,K	BP	5	J,L,N	0.480	3	N/A
M49470P01184%B#	0.18	200	J,K	BP	5	J,L,N	0.650	3	N/A
M49470P01224%B#	0.22	200	J,K	BP	5	J,L,N	0.650	3	N/A
M49470P01274%B#	0.27	200	J,K	BP	4	J,L,N	0.360	3	N/A
M49470P01334%B#	0.33	200	J,K	BP	4	J,L,N	0.480	3	N/A
M49470P01394%B#	0.39	200	J,K	BP	4	J,L,N	0.480	3	N/A
M49470P01474%B#	0.47	200	J,K	BP	4	J,L,N	0.650	3	N/A
M49470P01564%B#	0.56	200	J,K	BP	4	J,L,N	0.650	3	N/A
M49470P01684%B#	0.68	200	J,K	BP	3	J,L,N	0.240	3	N/A
M49470X01684%B#	0.68	200	K,M	BX	5	J,L,N	0.120	3	N/A
M49470P01824%B#	0.82	200	J,K	BP	3	J,L,N	0.120	3	N/A
M49470X01824%B#	0.82	200	K,M	BX	5	J,L,N	0.240	3	N/A
M49470P01105%B#	1	200	J,K	BP	3	J,L,N	0.360	3	N/A
M49470X01105%B#	1	200	K,M	BX	5	J,L,N	0.240	3	N/A
M49470P01125%B#	1.2	200	J,K	BP	3	J,L,N	0.480	3	N/A
M49470X01125%B#	1.2	200	K,M	BX	5	J,L,N	0.240	3	N/A
M49470P01155%B#	1.5	200	J,K	BP	3	J,L,N	0.480	3	N/A
M49470X01155%B#	1.5	200	K,M	BX	5	J,L,N	0.360	3	N/A
M49470P01185%B#	1.8	200	J,K	BP	3	J,L,N	0.650	3	N/A
M49470X01185%B#	1.8	200	K,M	BX	5	J,L,N	0.360	3	N/A
M49470P01225%B#	2.2	200	J,K	BP	1	J,L,N	0.480	3	N/A
M49470X01225%B#	2.2	200	K,M	BX	5	J,L,N	0.480	3	N/A
M49470P01275%B#	2.7	200	J,K	BP	1	J,L,N	0.480	3	N/A
M49470X01275%B#	2.7	200	K,M	BX	5	J,L,N	0.480	3	N/A
M49470P01335%B#	3.3	200	J,K	BP	1	J,L,N	0.650	3	N/A
M49470X01335%B#	3.3	200	K,M	BX	5	J,L,N	0.650	3	N/A
M49470P01395%B#	3.9	200	J,K	BP	2	J,L,N	0.480	3	N/A
M49470X01395%B#	3.9	200	K,M	BX	4	J,L,N	0.360	3	N/A

M49470P01475%B#	4.7	200	J,K	BP	2	J,L,N	0.650	3	N/A
M49470X01475%B#	4.7	200	K,M	BX	4	J,L,N	0.360	3	N/A
M49470P01565%B#	5.6	200	J,K	BP	6	J,L,N	0.360	3	N/A
M49470X01565%B#	5.6	200	K,M	BX	4	J,L,N	0.480	3	N/A
M49470P01685%B#	6.8	200	J,K	BP	6	J,L,N	0.360	3	N/A
M49470X01685%B#	6.8	200	K,M	BX	4	J,L,N	0.480	3	N/A
M49470P01825%B#	8.2	200	J,K	BP	6	J,L,N	0.480	3	N/A
M49470X01825%B#	8.2	200	K,M	BX	4	J,L,N	0.650	3	N/A
M49470P01106%B#	10	200	J,K	BP	6	J,L,N	0.650	3	N/A
M49470X01106%B#	10	200	K,M	BX	3	J,L,N	0.240	3	N/A
M49470P01126%B#	12	200	J,K	BP	6	J,L,N	0.650	3	N/A
M49470X01126%B#	12	200	K,M	BX	3	J,L,N	0.240	3	N/A
M49470X01156%B#	15	200	K,M	BX	3	J,L,N	0.360	3	N/A
M49470X01186%B#	18	200	K,M	BX	3	J,L,N	0.360	3	N/A
M49470X01226%B#	22	200	K,M	BX	3	J,L,N	0.480	3	N/A
M49470X01276%B#	27	200	K,M	BX	3	J,L,N	0.650	3	N/A
M49470X01336%B#	33	200	K,M	BX	1	J,L,N	0.360	3	N/A
M49470X01396%B#	39	200	K,M	BX	1	J,L,N	0.480	3	N/A
M49470X01476%B#	47	200	K,M	BX	1	J,L,N	0.480	3	N/A
M49470X01566%B#	56	200	K,M	BX	1	J,L,N	0.650	3	N/A
M49470X01686%B#	68	200	K,M	BX	2	J,L,N	0.480	3	N/A
M49470X01826%B#	82	200	K,M	BX	2	J,L,N	0.650	3	N/A
M49470X01107%B#	100	200	K,M	BX	6	J,L,N	0.360	3	N/A
M49470X01127%B#	120	200	K,M	BX	6	J,L,N	0.360	3	N/A
M49470X01157%B#	150	200	K,M	BX	6	J,L,N	0.480	3	N/A
M49470X01187%B#	180	200	K,M	BX	6	J,L,N	0.650	3	N/A
M49470P01223%C#	0.022	500	J,K	BP	5	J,L,N	0.120	3	N/A
M49470P01273%C#	0.027	500	J,K	BP	5	J,L,N	0.240	3	N/A
M49470P01333%C#	0.033	500	J,K	BP	5	J,L,N	0.240	3	N/A
M49470P01393%C#	0.039	500	J,K	BP	5	J,L,N	0.240	3	N/A
M49470P01473%C#	0.047	500	J,K	BP	5	J,L,N	0.360	3	N/A
M49470P01563%C#	0.056	500	J,K	BP	5	J,L,N	0.360	3	N/A
M49470P01683%C#	0.068	500	J,K	BP	5	J,L,N	0.480	3	N/A
M49470P01823%C#	0.082	500	J,K	BP	5	J,L,N	0.480	3	N/A
M49470P01104%C#	0.1	500	J,K	BP	5	J,L,N	0.650	3	N/A
M49470P01124%C#	0.12	500	J,K	BP	4	J,L,N	0.360	3	N/A
M49470P01154%C#	0.15	500	J,K	BP	4	J,L,N	0.360	3	N/A
M49470P01184%C#	0.18	500	J,K	BP	4	J,L,N	0.480	3	N/A
M49470P01224%C#	0.22	500	J,K	BP	4	J,L,N	0.480	3	N/A
M49470P01274%C#	0.27	500	J,K	BP	4	J,L,N	0.650	3	N/A
M49470P01334%C#	0.33	500	J,K	BP	3	J,L,N	0.240	3	N/A
M49470P01394%C#	0.39	500	J,K	BP	3	J,L,N	0.240	3	N/A
M49470P01474%C#	0.47	500	J,K	BP	3	J,L,N	0.360	3	N/A
M49470R01474%C#	0.47	500	K,M	BR	5	J,L,N	0.240	3	N/A
M49470P01564%C#	0.56	500	J,K	BP	3	J,L,N	0.360	3	N/A
M49470R01564%C#	0.56	500	K,M	BR	5	J,L,N	0.240	3	N/A
M49470P01684%C#	0.68	500	J,K	BP	3	J,L,N	0.480	3	N/A

M49470R01684%C#	0.68	500	K,M	BR	5	J,L,N	0.360	3	N/A
M49470P01824%C#	0.82	500	J,K	BP	3	J,L,N	0.650	3	N/A
M49470R01824%C#	0.82	500	K,M	BR	5	J,L,N	0.360	3	N/A
M49470P01105%C#	1	500	J,K	BP	3	J,L,N	0.650	3	N/A
M49470R01105%C#	1	500	K,M	BR	5	J,L,N	0.480	3	N/A
M49470P01125%C#	1.2	500	J,K	BP	1	J,L,N	0.480	3	N/A
M49470R01125%C#	1.2	500	K,M	BR	5	J,L,N	0.480	3	N/A
M49470P01155%C#	1.5	500	J,K	BP	1	J,L,N	0.480	3	N/A
M49470R01155%C#	1.5	500	K,M	BR	5	J,L,N	0.650	3	N/A
M49470P01185%C#	1.8	500	J,K	BP	1	J,L,N	0.650	3	N/A
M49470R01185%C#	1.8	500	K,M	BR	4	J,L,N	0.360	3	N/A
M49470P01225%C#	2.2	500	J,K	BP	2	J,L,N	0.480	3	N/A
M49470R01225%C#	2.2	500	K,M	BR	4	J,L,N	0.360	3	N/A
M49470P01275%C#	2.7	500	J,K	BP	2	J,L,N	0.650	3	N/A
M49470R01275%C#	2.7	500	K,M	BR	4	J,L,N	0.480	3	N/A
M49470P01335%C#	3.3	500	J,K	BP	6	J,L,N	0.360	3	N/A
M49470R01335%C#	3.3	500	K,M	BR	4	J,L,N	0.480	3	N/A
M49470P01395%C#	3.9	500	J,K	BP	6	J,L,N	0.360	3	N/A
M49470R01395%C#	3.9	500	K,M	BR	4	J,L,N	0.650	3	N/A
M49470Q01224%E#	0.22	500	K,M	BQ	5	J,L,N	0.240	3	N/A
M49470P01274%E#	0.27	500	J,K	BP	3	J,L,N	0.360	3	N/A
M49470Q01274%E#	0.27	500	K,M	BQ	5	J,L,N	0.240	3	N/A
M49470P01334%E#	0.33	500	J,K	BP	3	J,L,N	0.480	3	N/A
M49470Q01334%E#	0.33	500	K,M	BQ	5	J,L,N	0.360	3	N/A
M49470P01394%E#	0.39	500	J,K	BP	3	J,L,N	0.650	3	N/A
M49470Q01394%E#	0.39	500	K,M	BQ	5	J,L,N	0.360	3	N/A
M49470P01474%E#	0.47	500	J,K	BP	1	J,L,N	0.360	3	N/A
M49470Q01474%E#	0.47	500	K,M	BQ	5	J,L,N	0.360	3	N/A
M49470P01564%E#	0.56	500	J,K	BP	1	J,L,N	0.480	3	N/A
M49470Q01564%E#	0.56	500	K,M	BQ	5	J,L,N	0.480	3	N/A
M49470P01684%E#	0.68	500	J,K	BP	1	J,L,N	0.480	3	N/A
M49470Q01684%E#	0.68	500	K,M	BQ	5	J,L,N	0.650	3	N/A
M49470P01824%E#	0.82	500	J,K	BP	1	J,L,N	0.650	3	N/A
M49470Q01824%E#	0.82	500	K,M	BQ	4	J,L,N	0.360	3	N/A
M49470P01105%E#	1	500	J,K	BP	2	J,L,N	0.480	3	N/A
M49470Q01105%E#	1	500	K,M	BQ	4	J,L,N	0.360	3	N/A
M49470P01125%E#	1.2	500	J,K	BP	2	J,L,N	0.650	3	N/A
M49470Q01125%E#	1.2	500	K,M	BQ	4	J,L,N	0.360	3	N/A
M49470P01155%E#	1.5	500	J,K	BP	6	J,L,N	0.360	3	N/A
M49470Q01155%E#	1.5	500	K,M	BQ	4	J,L,N	0.480	3	N/A
M49470P01185%E#	1.8	500	J,K	BP	6	J,L,N	0.480	3	N/A
M49470Q01185%E#	1.8	500	K,M	BQ	4	J,L,N	0.650	3	N/A
M49470P01225%E#	2.2	500	J,K	BP	6	J,L,N	0.650	3	N/A
M49470Q01225%E#	2.2	500	K,M	BQ	3	J,L,N	0.240	3	N/A
M49470Q01275%E#	2.7	500	K,M	BQ	3	J,L,N	0.360	3	N/A
M49470Q01335%E#	3.3	500	K,M	BQ	3	J,L,N	0.360	3	N/A
M49470Q01395%E#	3.9	500	K,M	BQ	3	J,L,N	0.360	3	N/A

M49470Q01475%E#	4.7	500	K,M	BQ	3	J,L,N	0.480	3	N/A
M49470Q01565%E#	5.6	500	K,M	BQ	3	J,L,N	0.650	3	N/A
M49470Q01685%E#	6.8	500	K,M	BQ	1	J,L,N	0.480	3	N/A
M49470Q01825%E#	8.2	500	K,M	BQ	1	J,L,N	0.480	3	N/A
M49470Q01106%E#	10	500	K,M	BQ	1	J,L,N	0.480	3	N/A
M49470Q01126%E#	12	500	K,M	BQ	1	J,L,N	0.650	3	N/A
M49470Q01156%E#	15	500	K,M	BQ	2	J,L,N	0.650	3	N/A
M49470Q01186%E#	18	500	K,M	BQ	2	J,L,N	0.650	3	N/A
M49470Q01226%E#	22	500	K,M	BQ	6	J,L,N	0.360	3	N/A
M49470Q01276%E#	27	500	K,M	BQ	6	J,L,N	0.360	3	N/A
M49470Q01336%E#	33	500	K,M	BQ	6	J,L,N	0.480	3	N/A
M49470Q01396%E#	39	500	K,M	BQ	6	J,L,N	0.650	3	N/A

MIL-PRF-49470/2 (PS02 Style), CAPACITORS

Fixed, Ceramic Dielectric, Switch Mode Power Supply

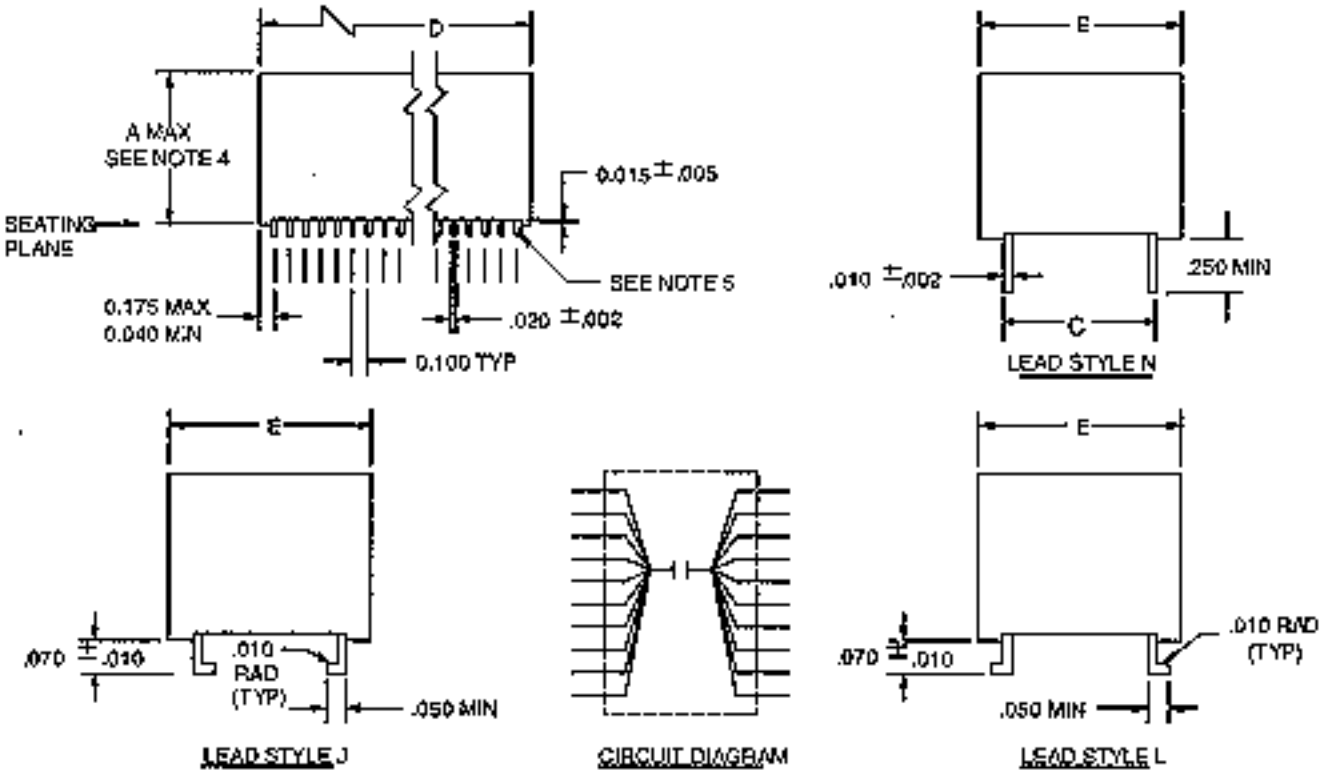

Physical Dimensions Table

Case Code	C +/-0.025	D +/- 0.025	E (Max)	Number of Pins per Side
1	0.450	2.155	0.580	20
2	0.800	1.615	0.950	15
3	0.450	1.155	0.580	10
4	0.400	0.485	0.485	4
5	0.250	0.355	0.355	3
6	1.250	1.430	1.430	20

Notes:

1) Dimensions are in inches.

2) Metric equivalents are given for general information only.

3) Unless otherwise specified, tolerances are +/-0.010 inches.

4) See the part list table for specific maximum A dimension. For all lead styles, the number of chips is determined by the capacitance and voltage rating.

5) Lead alignment within pin rows shall be within +/-0.005 inches.

MIL-PRF-49470/2 Ceramic Switch Mode Power Supply (SMPS) Capacitors, 50 V Rated

Part Number	Capacitance (uF)	Rated Volt (V)	Cap. Tol. (%)	Temp. Char.	Case Code	Lead Style (#)	Max. "A" Dimension	Level 1 (*)	Level 2 (*)	Manufacturer
*49470X02105%A#	1.0	50	K,M	BX	5	N,L,M,J,K	0.270	T	M	AVX1
*49470X02125%A#	1.2	50	K,M	BX	5	N,L,M,J,K	0.270	T	M	AVX1
*49470X02155%A#	1.5	50	K,M	BX	5	N,L,M,J,K	0.390	T	M	AVX1
*49470X02185%A#	1.8	50	K,M	BX	5	N,L,M,J,K	0.390	T	M	AVX1
*49470X02225%A#	2.2	50	K,M	BX	5	N,L,M,J,K	0.390	T	M	AVX1
*49470X02275%A#	2.7	50	K,M	BX	5	N,L,M,J,K	0.530	T	M	AVX1
*49470X02335%A#	3.3	50	K,M	BX	5	N,L,M,J,K	0.530	T	M	AVX1
*49470X02395%A#	3.9	50	K,M	BX	5	N,L,M,J,K	0.660	T	M	AVX1
*49470X02475%A#	4.7	50	K,M	BX	5	N,L,M,J,K	0.660	T	M	AVX1
*49470X02475%A#	4.7	50	K,M	BX	4	A,B,C,D,F	0.390	T	M	AVX1
*49470X02565%A#	5.6	50	K,M	BX	5	N,L,M,J,K	0.800	T	M	AVX1
*49470X02565%A#	5.6	50	K,M	BX	4	A,B,C,D,F	0.390	T	M	AVX1
*49470X02685%A#	6.8	50	K,M	BX	4	N,L,M,J,K	0.530	T	M	AVX1
*49470X02825%A#	8.2	50	K,M	BX	4	N,L,M,J,K	0.530	T	M	AVX1
*49470X02106%A#	10	50	K,M	BX	4	N,L,M,J,K	0.660	T	M	AVX1
*49470X02126%A#	12	50	K,M	BX	4	N,L,M,J,K	0.660	T	M	AVX1
*49470X02156%A#	15	50	K,M	BX	4	N,L,M,J,K	0.800	T	M	AVX1
*49470X02156%A#	15	50	K,M	BX	3	A,B,C,D,F	0.390	T	M	AVX1
*49470X02186%A#	18	50	K,M	BX	3	N,L,M,J,K	0.390	T	M	AVX1

*49470X02226%A#	22	50	K,M	BX	3	N,L,M,J,K	0.530	T	M	AVX1
*49470X02276%A#	27	50	K,M	BX	3	N,L,M,J,K	0.530	T	M	AVX1
*49470X02336%A#	33	50	K,M	BX	3	N,L,M,J,K	0.530	T	M	AVX1
*49470X02396%A#	39	50	K,M	BX	3	N,L,M,J,K	0.660	T	M	AVX1
*49470X02476%A#	47	50	K,M	BX	3	N,L,M,J,K	0.800	T	M	AVX1
*49470X02476%A#	47	50	K,M	BX	2	A,B,C,D,F	0.390	-	M	AVX1
*49470X02566%A#	56	50	K,M	BX	1	N,L,M,J,K	0.530	-	M	AVX1
*49470X02566%A#	56	50	K,M	BX	2	A,B,C,D,F	0.390	-	M	AVX1
*49470X02686%A#	68	50	K,M	BX	1	N,L,M,J,K	0.660	-	M	AVX1
*49470X02686%A#	68	50	K,M	BX	2	A,B,C,D,F	0.530	-	M	AVX1
*49470X02826%A#	82	50	K,M	BX	1	N,L,M,J,K	0.660	-	M	AVX1
*49470X02826%A#	82	50	K,M	BX	2	A,B,C,D,F	0.530	-	M	AVX1
*49470X02107%A#	100	50	K,M	BX	1	N,L,M,J,K	0.800	-	M	AVX1
*49470X02107%A#	100	50	K,M	BX	2	A,B,C,D,F	0.660	-	M	AVX1
*49470X02127%A#	120	50	K,M	BX	2	N,L,M,J,K	0.660	-	M	AVX1
*49470X02157%A#	150	50	K,M	BX	2	N,L,M,J,K	0.800	-	M	AVX1
*49470X02187%A#	180	50	K,M	BX	6	N,L,M,J,K	0.660	-	M	AVX1
*49470X02227%A#	220	50	K,M	BX	6	N,L,M,J,K	0.660	-	M	AVX1
*49470X02277%A#	270	50	K,M	BX	6	N,L,M,J,K	0.800	-	M	AVX1

MIL-PRF-49470/2 Ceramic Switch Mode Power Supply (SMPS) Capacitors, 100 V Rated

Part Number	Capacitance (uF)	Rated Volt (V)	Cap. Tol. (%)	Temp. Char.	Case Code	Lead Style (#)	Max. "A" Dimension	Level 1 (*)	Level 2 (*)	Manufacturer
*49470X02684%B#	0.68	100	K,M	BX	5	N,L,M,J,K	0.270	T	M	AVX1
*49470X02824%B#	0.82	100	K,M	BX	5	N,L,M,J,K	0.390	T	M	AVX1
*49470X02105%B#	1.0	100	K,M	BX	5	N,L,M,J,K	0.390	T	M	AVX1
*49470X02125%B#	1.2	100	K,M	BX	5	N,L,M,J,K	0.390	T	M	AVX1
*49470X02155%B#	1.5	100	K,M	BX	5	N,L,M,J,K	0.530	T	M	AVX1
*49470X02185%B#	1.8	100	K,M	BX	5	N,L,M,J,K	0.530	T	M	AVX1
*49470X02225%B#	2.2	100	K,M	BX	5	N,L,M,J,K	0.660	T	M	AVX1
*49470X02225%B#	2.2	100	K,M	BX	4	A,B,D,C,F	0.390	T	M	AVX1
*49470X02275%B#	2.7	100	K,M	BX	5	N,L,M,J,K	0.660	T	M	AVX1
*49470X02335%B#	3.3	100	K,M	BX	5	N,L,M,J,K	0.800	T	M	AVX1
*49470X02335%B#	3.3	100	K,M	BX	4	A,B,D,C,F	0.390	T	M	AVX1
*49470X02395%B#	3.9	100	K,M	BX	4	N,L,M,J,K	0.530	T	M	AVX1
*49470X02475%B#	4.7	100	K,M	BX	4	N,L,M,J,K	0.530	T	M	AVX1
*49470X02565%B#	5.6	100	K,M	BX	4	N,L,M,J,K	0.660	T	M	AVX1
*49470X02685%B#	6.8	100	K,M	BX	4	N,L,M,J,K	0.660	T	M	AVX1
*49470X02825%B#	8.2	100	K,M	BX	4	N,L,M,J,K	0.800	T	M	AVX1
*49470X02825%B#	8.2	100	K,M	BX	3	A,B,D,C,F	0.390	T	M	AVX1
*49470X02106%B#	10	100	K,M	BX	3	N,L,M,J,K	0.390	T	M	AVX1
*49470X02126%B#	12	100	K,M	BX	3	N,L,M,J,K	0.390	T	M	AVX1
*49470X02156%B#	15	100	K,M	BX	3	N,L,M,J,K	0.530	T	M	AVX1
*49470X02186%B#	18	100	K,M	BX	3	N,L,M,J,K	0.530	T	M	AVX1
*49470X02226%B#	22	100	K,M	BX	3	N,L,M,J,K	0.660	T	M	AVX1

*49470X02276%B#	27	100	K,M	BX	3	N,L,M,J,K	0.800	T	M	AVX1
*49470X02276%B#	27	100	K,M	BX	2	A,B,D,C,F	0.390	-	M	AVX1
*49470X02336%B#	33	100	K,M	BX	1	N,L,M,J,K	0.530	-	M	AVX1
*49470X02336%B#	33	100	K,M	BX	2	A,B,D,C,F	0.390	-	M	AVX1
*49470X02396%B#	39	100	K,M	BX	1	N,L,M,J,K	0.660	-	M	AVX1
*49470X02396%B#	39	100	K,M	BX	2	A,B,D,C,F	0.530	-	M	AVX1
*49470X02476%B#	47	100	K,M	BX	1	N,L,M,J,K	0.660	-	M	AVX1
*49470X02476%B#	47	100	K,M	BX	2	A,B,D,C,F	0.530	-	M	AVX1
*49470X02566%B#	56	100	K,M	BX	1	N,L,M,J,K	0.800	-	M	AVX1
*49470X02686%B#	68	100	K,M	BX	2	N,L,M,J,K	0.660	-	M	AVX1
*49470X02826%B#	82	100	K,M	BX	2	N,L,M,J,K	0.800	-	M	AVX1
*49470X02107%B#	100	100	K,M	BX	6	N,L,M,J,K	0.530	-	M	AVX1
*49470X02127%B#	120	100	K,M	BX	6	N,L,M,J,K	0.530	-	M	AVX1
*49470X02157%B#	150	100	K,M	BX	6	N,L,M,J,K	0.660	-	M	AVX1
*49470X02187%B#	180	100	K,M	BX	6	N,L,M,J,K	0.800	-	M	AVX1

MIL-PRF-49470/2 Ceramic Switch Mode Power Supply (SMPS) Capacitors, 200 V Rated

Part Number	Capacitance (uF)	Rated Volt (V)	Cap. Tol. (%)	Temp. Char.	Case Code	Lead Style (#)	Max. "A" Dimension	Level 1 (*)	Level 2 (*)	Manufacturer
*49470R02474%C#	0.47	200	K,M	BR	5	N,L,M,J,K	0.390	T	M	AVX1
*49470R02564%C#	0.56	200	K,M	BR	5	N,L,M,J,K	0.390	T	M	AVX1
*49470R02684%C#	0.68	200	K,M	BR	5	N,L,M,J,K	0.530	T	M	AVX1
*49470R02824%C#	0.82	200	K,M	BR	5	N,L,M,J,K	0.530	T	M	AVX1
*49470R02105%C#	1.0	200	K,M	BR	5	N,L,M,J,K	0.660	T	M	AVX1
*49470R02105%C#	1.0	200	K,M	BR	4	A,B,D,C,F	0.270	T	M	AVX1
*49470R02125%C#	1.2	200	K,M	BR	5	N,L,M,J,K	0.660	T	M	AVX1
*49470R02125%C#	1.2	200	K,M	BR	4	A,B,D,C,F	0.390	T	M	AVX1
*49470R02155%C#	1.5	200	K,M	BR	5	N,L,M,J,K	0.800	T	M	AVX1
*49470R02155%C#	1.5	200	K,M	BR	4	A,B,D,C,F	0.390	T	M	AVX1
*49470R02185%C#	1.8	200	K,M	BR	4	N,L,M,J,K	0.530	T	M	AVX1
*49470R02225%C#	2.2	200	K,M	BR	4	N,L,M,J,K	0.530	T	M	AVX1
*49470R02275%C#	2.7	200	K,M	BR	4	N,L,M,J,K	0.660	T	M	AVX1
*49470R02335%C#	3.3	200	K,M	BR	4	N,L,M,J,K	0.660	T	M	AVX1
*49470R02395%C#	3.9	200	K,M	BR	4	N,L,M,J,K	0.800	T	M	AVX1
*49470R02395%C#	3.9	200	K,M	BR	3	A,B,D,C,F	0.390	T	M	AVX1
*49470R02475%C#	4.7	200	K,M	BR	3	N,L,M,J,K	0.390	T	M	AVX1
*49470R02565%C#	5.6	200	K,M	BR	3	N,L,M,J,K	0.390	T	M	AVX1
*49470R02685%C#	6.8	200	K,M	BR	3	N,L,M,J,K	0.530	T	M	AVX1
*49470R02825%C#	8.2	200	K,M	BR	3	N,L,M,J,K	0.530	T	M	AVX1
*49470R02106%C#	10	200	K,M	BR	3	N,L,M,J,K	0.660	T	M	AVX1
*49470R02126%C#	12	200	K,M	BR	3	N,L,M,J,K	0.800	T	M	AVX1
*49470R02126%C#	12	200	K,M	BR	2	A,B,D,C,F	0.390	--	M	AVX1
*49470R02156%C#	15	200	K,M	BR	1	N,L,M,J,K	0.530	--	M	AVX1
*49470R02156%C#	15	200	K,M	BR	2	A,B,D,C,F	0.390	--	M	AVX1
*49470R02186%C#	18	200	K,M	BR	1	N,L,M,J,K	0.660	--	M	AVX1

*49470R02186%C#	18	200	K,M	BR	2	A,B,D,C,F	0.530	--	M	AVX1
*49470R02226%C#	22	200	K,M	BR	1	N,L,M,J,K	0.800	--	M	AVX1
*49470R02226%C#	22	200	K,M	BR	2	A,B,D,C,F	0.530	--	M	AVX1
*49470R02276%C#	27	200	K,M	BR	1	N,L,M,J,K	0.800	--	M	AVX1
*49470R02276%C#	27	200	K,M	BR	2	A,B,D,C,F	0.660	--	M	AVX1
*49470R02336%C#	33	200	K,M	BR	2	N,L,M,J,K	0.660	--	M	AVX1
*49470R02396%C#	39	200	K,M	BR	2	N,L,M,J,K	0.800	--	M	AVX1
*49470R02476%C#	47	200	K,M	BR	6	N,L,M,J,K	0.390	--	M	AVX1
*49470R02566%C#	56	200	K,M	BR	6	N,L,M,J,K	0.530	--	M	AVX1
*49470R02686%C#	68	200	K,M	BR	6	N,L,M,J,K	0.530	--	M	AVX1
*49470R02826%C#	82	200	K,M	BR	6	N,L,M,J,K	0.660	--	M	AVX1
*49470R02107%C#	100	200	K,M	BR	6	N,L,M,J,K	0.800	--	M	AVX1
*49470R02127%C#	120	200	K,M	BR	6	N,L,M,J,K	0.800	--	M	AVX1

MIL-PRF-49470/2 Ceramic Switch Mode Power Supply (SMPS) Capacitors, 500 V Rated

Part Number	Capacitance (uF)	Rated Volt (V)	Cap. Tol. (%)	Temp. Char.	Case Code	Lead Style (#)	Max. "A" Dimension	Level 1 (*)	Level 2 (*)	Manufacturer
*49470 Q02154%E#	0.15	500	K,M	BQ	5	N,L,M,J,K	0.270	T	M	AVX1
*49470 Q02184%E#	0.18	500	K,M	BQ	5	N,L,M,J,K	0.390	T	M	AVX1
*49470 Q02224%E#	0.22	500	K,M	BQ	5	N,L,M,J,K	0.390	T	M	AVX1
*49470 Q02274%E#	0.27	500	K,M	BQ	5	N,L,M,J,K	0.390	T	M	AVX1
*49470 Q02334%E#	0.33	500	K,M	BQ	5	N,L,M,J,K	0.530	T	M	AVX1
*49470 Q02394%E#	0.39	500	K,M	BQ	5	N,L,M,J,K	0.530	T	M	AVX1
*49470 Q02474%E#	0.47	500	K,M	BQ	5	N,L,M,J,K	0.530	T	M	AVX1
*49470 Q02564%E#	0.56	500	K,M	BQ	5	N,L,M,J,K	0.660	T	M	AVX1
*49470 Q02564%E#	0.56	500	K,M	BQ	4	A,B,D,C,F	0.390	T	M	AVX1
*49470 Q02684%E#	0.68	500	K,M	BQ	5	N,L,M,J,K	0.800	T	M	AVX1
*49470 Q02684%E#	0.68	500	K,M	BQ	4	A,B,D,C,F	0.390	T	M	AVX1
*49470 Q02824%E#	0.82	500	K,M	BQ	4	N,L,M,J,K	0.530	T	M	AVX1
*49470 Q02105%E#	1	500	K,M	BQ	4	N,L,M,J,K	0.530	T	M	AVX1
*49470 Q02125%E#	1.2	500	K,M	BQ	4	N,L,M,J,K	0.530	T	M	AVX1
*49470 Q02155%E#	1.5	500	K,M	BQ	4	N,L,M,J,K	0.660	T	M	AVX1
*49470 Q02185%E#	1.8	500	K,M	BQ	4	N,L,M,J,K	0.800	T	M	AVX1
*49470 Q02185%E#	1.8	500	K,M	BQ	3	A,B,D,C,F	0.390	T	M	AVX1
*49470 Q02225%E#	2.2	500	K,M	BQ	3	N,L,M,J,K	0.390	T	M	AVX1
*49470 Q02275%E#	2.7	500	K,M	BQ	3	N,L,M,J,K	0.530	T	M	AVX1
*49470 Q02335%E#	3.3	500	K,M	BQ	3	N,L,M,J,K	0.530	T	M	AVX1
*49470 Q02395%E#	3.9	500	K,M	BQ	3	N,L,M,J,K	0.530	T	M	AVX1
*49470 Q02475%E#	4.7	500	K,M	BQ	3	N,L,M,J,K	0.660	T	M	AVX1
*49470 Q02565%E#	5.6	500	K,M	BQ	3	N,L,M,J,K	0.800	T	M	AVX1
*49470Q02565%E#	5.6	500	K,M	BQ	2	A,B,D,C,F	0.390	--	M	AVX1
*49470Q02685%E#	6.8	500	K,M	BQ	1	N,L,M,J,K	0.660	--	M	AVX1
*49470Q02685%E#	6.8	500	K,M	BQ	2	A,B,D,C,F	0.390	--	M	AVX1
*49470Q02825%E#	8.2	500	K,M	BQ	1	N,L,M,J,K	0.660	--	M	AVX1
*49470Q02825%E#	8.2	500	K,M	BQ	2	A,B,D,C,F	0.530	--	M	AVX1

*49470Q02106%E#	10	500	K,M	BQ	1	N,L,M,J,K	0.660	--	M	AVX1
*49470Q02106%E#	10	500	K,M	BQ	2	A,B,D,C,F	0.530	--	M	AVX1
*49470Q02126%E#	12	500	K,M	BQ	1	N,L,M,J,K	0.800	--	M	AVX1
*49470Q02126%E#	12	500	K,M	BQ	2	A,B,D,C,F	0.660	--	M	AVX1
*49470Q02156%E#	15	500	K,M	BQ	2	N,L,M,J,K	0.800	--	M	AVX1
*49470Q02186%E#	18	500	K,M	BQ	2	N,L,M,J,K	0.800	--	M	AVX1
*49470Q02226%E#	22	500	K,M	BQ	6	N,L,M,J,K	0.530	--	M	AVX1
*49470Q02276%E#	27	500	K,M	BQ	6	N,L,M,J,K	0.530	--	M	AVX1
*49470Q02336%E#	33	500	K,M	BQ	6	N,L,M,J,K	0.660	--	M	AVX1
*49470Q02396%E#	39	500	K,M	BQ	6	N,L,M,J,K	0.800	--	M	AVX1

MIL-PRF-49470/3 (PS03 Style), CAPACITORS

Fixed, Ceramic Dielectric, Switch Mode Power Supply

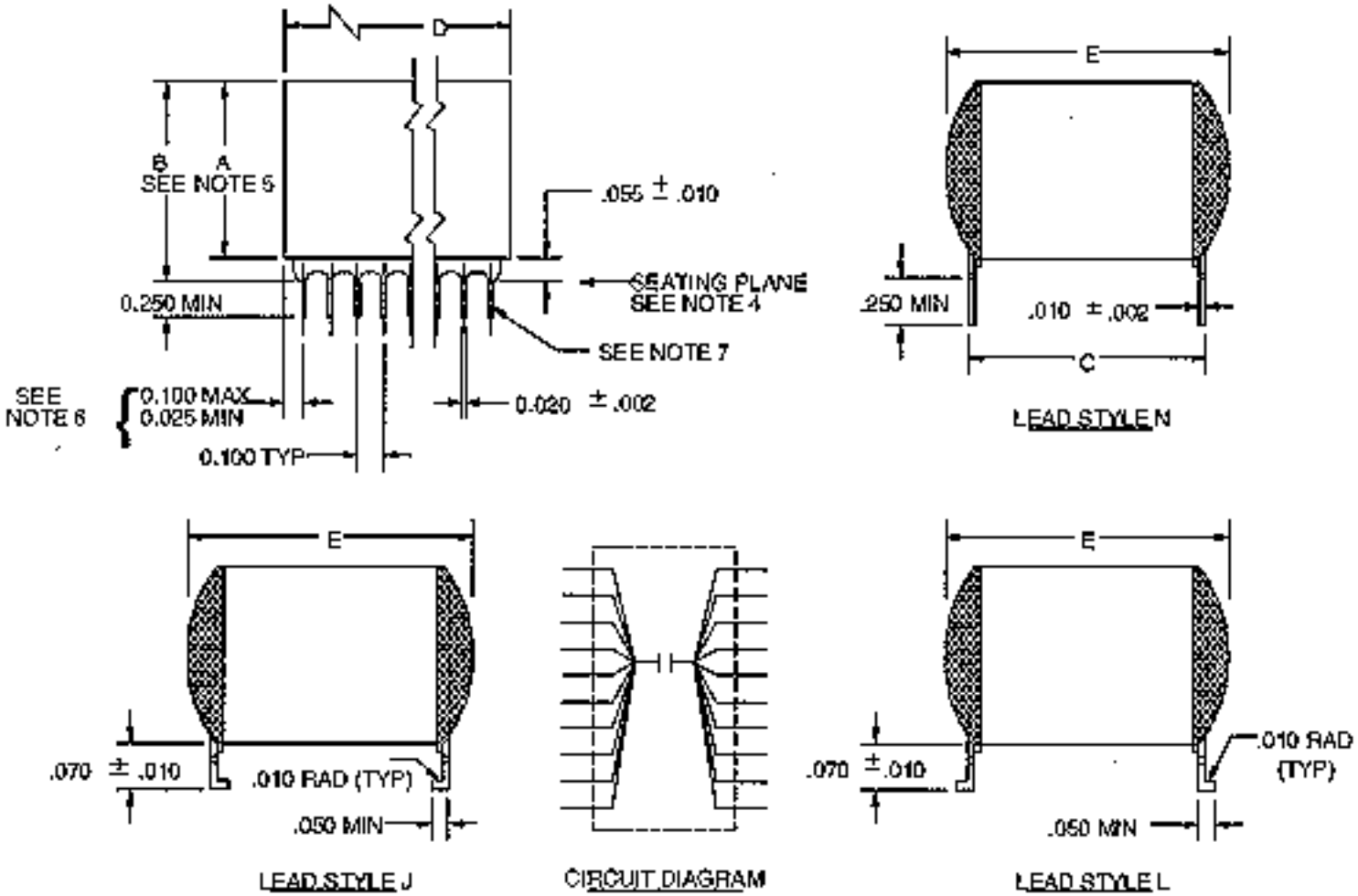

Physical Dimensions Table

Case Code	C +/-0.025	D (Min)	D (Max)	E (Max)	Number of Pins per Side
1	0.450	1.950	2.085	0.510	20
2	0.800	1.450	1.545	0.880	15
3	0.450	0.950	1.085	0.510	10
4	0.400	0.350	0.435	0.450	4
5	0.250	0.224	0.285	0.310	3
6	1.250	1.950	2.085	1.360	20

Notes:

1) Dimensions are in inches.

2) Metric equivalents are given for general information only.

3) Unless otherwise specified, tolerances are +/-0.010 inches.

4) Lead frame configuration is shown as typical above the seating plane.

5) See the part list table for specific A dimension.The A dimension is the off board height. For the straight or N style leads, A is from the top of the unit to the bottom of the lead standoff. For the formed or L and J style leads, A is from the top of the unit to the bottom of the lead.

6) For case code 5, dimenstions shall be 0.100 inches maximum and 0.012 inches minimum.

7) Lead alignment within pin rows shall be within +/-0.005 inches.

MIL-PRF-49470/4 (PS04 Style), CAPACITORS

Fixed, Ceramic Dielectric, Switch Mode Power Supply

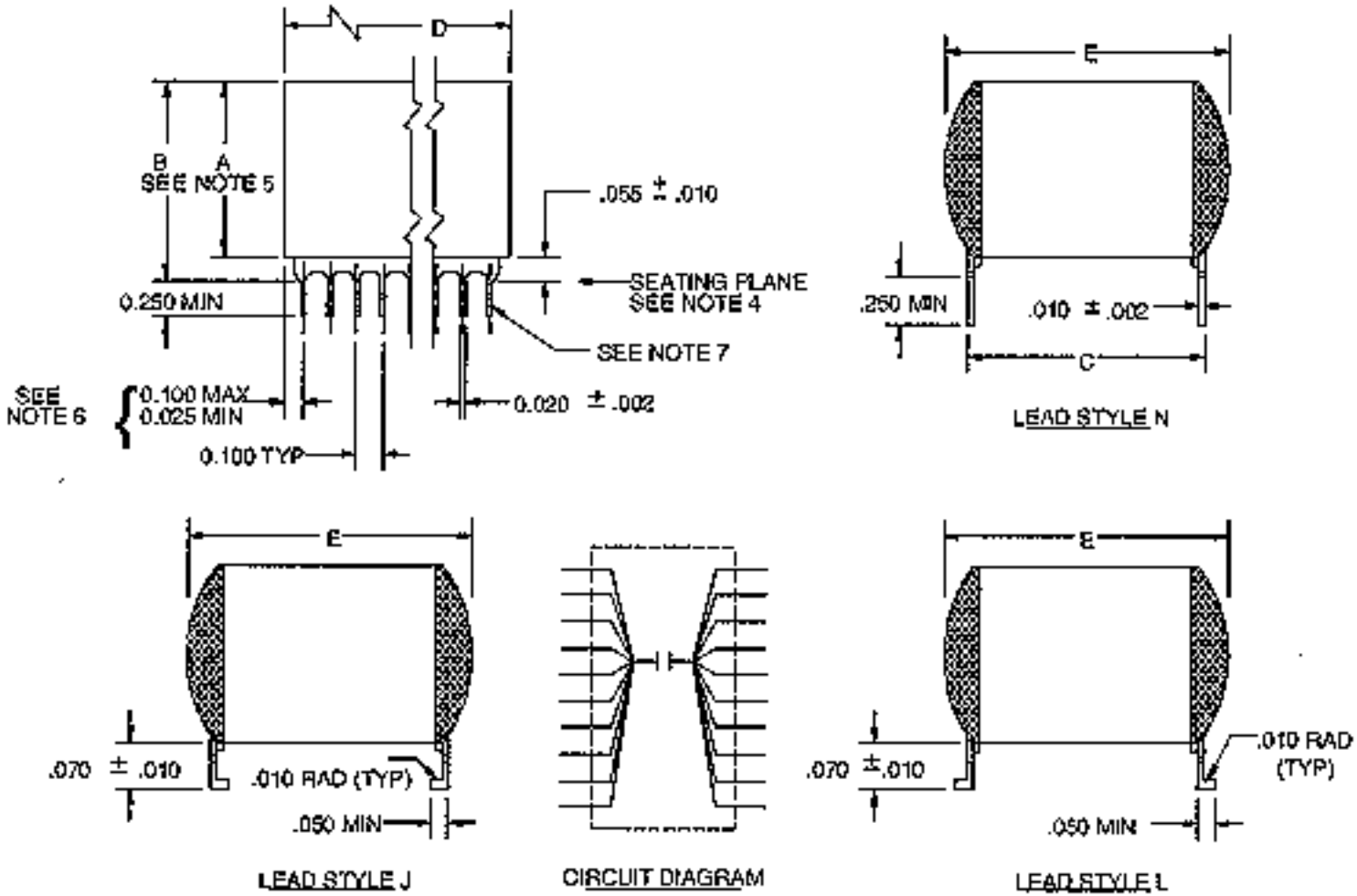

Physical Dimensions Table

Case Code	C +/-0.025	D (Min)	D (Max)	E (Max)	Number of Pins per Side
1	0.450	1.950	2.075	0.500	20
2	0.800	1.450	1.535	0.870	15
3	0.450	0.950	1.075	0.500	10

4	0.400	0.350	0.425	0.440	4
5	0.250	0.224	0.275	0.300	3
6	1.250	1.950	2.075	1.350	20

Notes:

1) Dimensions are in inches.

2) Metric equivalents are given for general information only.

3) Unless otherwise specified, tolerances are +/-0.010 inches.

4) Lead frame configuration is shown as typical above the seating plane.

5) See the part list table for specific maximum A dimension. For maximum B dimension, add 0.065 inches to the appropriate A dimension. For all lead styles, the number of chips is determined by the capacitance and voltage rating.

6) For case code 5, dimenstions shall be 0.100 inches maximum and 0.012 inches minimum.

7) Lead alignment within pin rows shall be within +/-0.005 inches.

MIL-PRF-49470/5 (PS05 Style), CAPACITORS

Fixed, Ceramic Dielectric, Switch Mode Power Supply

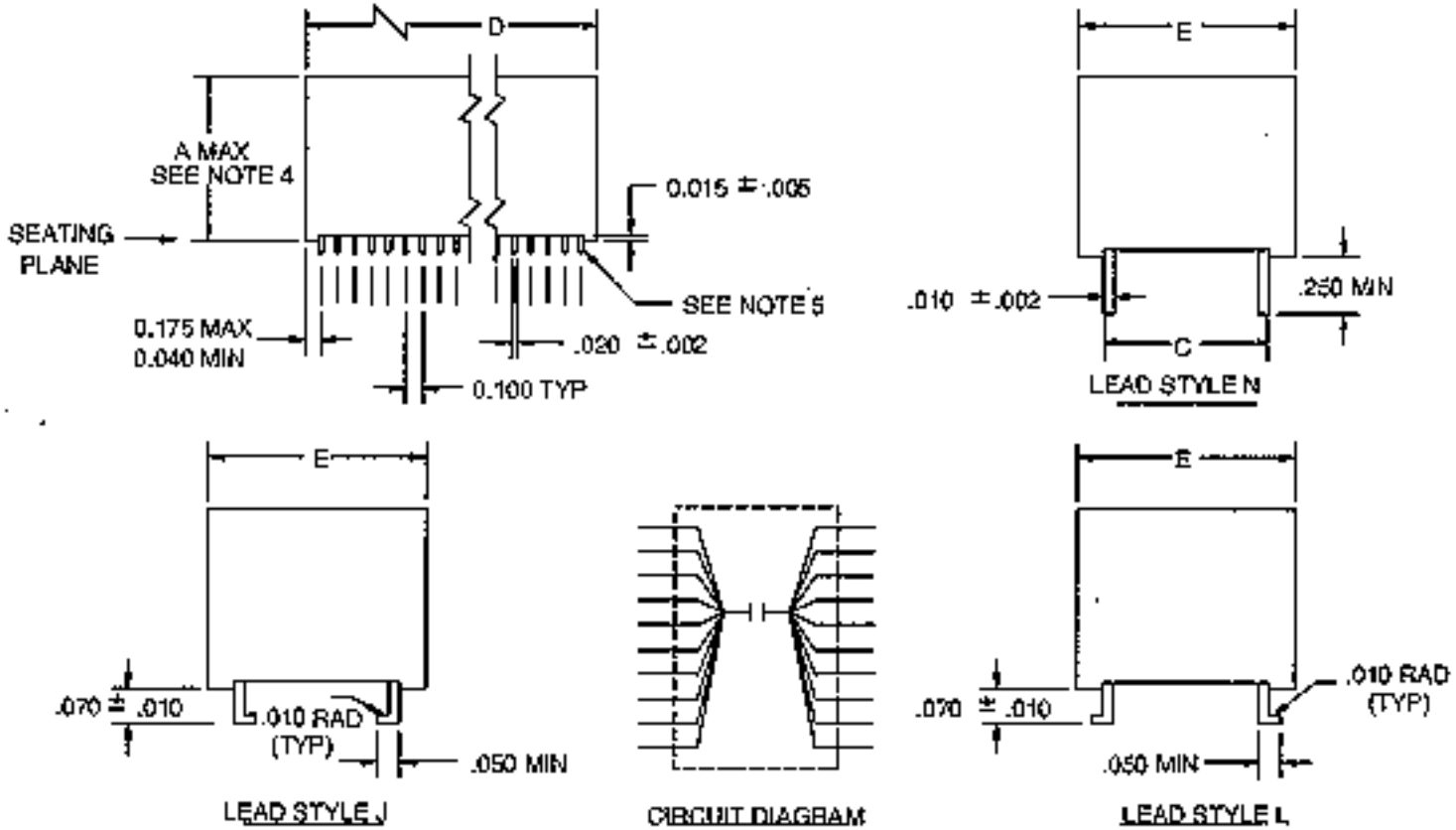

Physical Dimensions Table

Case Code	C +/-0.025	D (Min)	D (Max)	E (Max)	Number of Pins per Side
1	0.450	1.950	2.075	0.510	20
2	0.800	1.450	1.535	0.880	15
3	0.450	0.950	1.075	0.510	10
4	0.400	0.350	0.425	0.450	4
5	0.250	0.224	0.275	0.310	3
6	1.250	1.950	2.075	1.360	20

Notes:

1) Dimensions are in inches.

2) Metric equivalents are given for general information only.

3) Unless otherwise specified, tolerances are +/-0.010 inches.

4) See the part list table for specific maximum A dimension. For all lead styles, the number of chips is determined by the capacitance and voltage rating.

5) Lead alignment within pin rows shall be within +/-0.005 inches.

MIL-PRF-49470/6 (PS06 Style), CAPACITORS

Fixed, Ceramic Dielectric, Switch Mode Power Supply

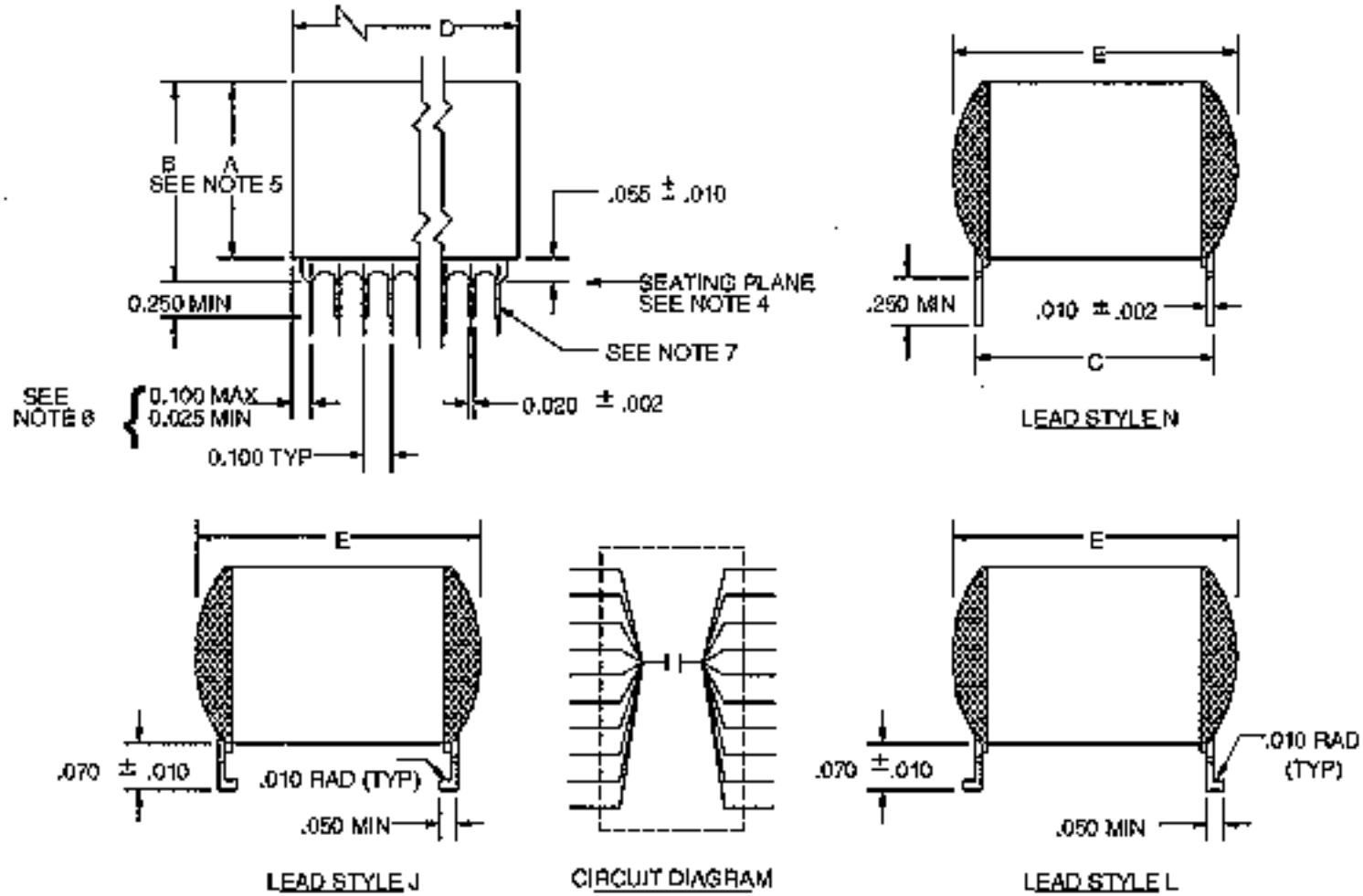

Physical Dimensions Table

Case Code	C +/-0.025	D (Min)	D (Max)	E (Max)	Number of Pins per Side
1	0.450	1.950	2.085	0.510	20
2	0.800	1.450	1.545	0.880	15
3	0.450	0.950	1.085	0.510	10

4	0.400	0.350	0.435	0.450	4
5	0.250	0.224	0.285	0.310	3
6	1.250	1.950	2.085	1.360	20

Notes:

1) Dimensions are in inches.

2) Metric equivalents are given for general information only.

3) Unless otherwise specified, tolerances are +/-0.010 inches.

4) Lead frame configuration is shown as typical above the seating frame.

5) See the part list table for specific A dimension. For straight or N style leads, A is from the top of the unit to the bottom of the lead standoff. For the formed or L and J styles leads, A is from the top of the unit to the bottom or the lead.

6) For case code 5, dimensions shall be 0.100 inches maximum and 0.012 inches minimum.

7) Lead alignment within pin rows shall be within +/-0.005 inches.

Go to -

NEPP

|

NPSL

|

Capacitors

MIL-PRF-55681, CAPACITORS

Chip, Multiple Layer, Fixed, Unencapsulated, Ceramic Dielectric, Established Reliability

CDR Styles

Part Number/Ordering Explanation

Important! Application Notes

Revision History for MIL-PRF-55681 Listing in the NPSL

Last Updated: 02/11/04

Click on the link below to see the associated parts selection listing:

Style	Detail Specification	Description (Physical Dimensions)	Available Capacitance Range (Voltage)
CDR01	MIL-PRF-55681/1	Chip (0805)	10 pF to 3,300 pF (100 V) 3,900 pF to 4,700 pF (50 V)
CDR02	MIL-PRF-55681/1	NOT RECOMMENDED FOR USE	
CDR03	MIL-PRF-55681/1	Chip (1808)	330 pF to 33,000 pF (100 V) 3,900 pF to 68,000 pF (50 V)
CDR04	MIL-PRF-55681/1	Chip (1812)	1,200 pF to 56,000 pF (100 V) 82,000 pF to 180,000 pF (50 V)
CDR05	MIL-PRF-55681/2	Chip (1825)	3,900 pF to 150,000 pF (100 V) 220,000 pF to 330,000 pF (50 V)
CDR06	MIL-PRF-55681/3	Chip (2225)	6,800 pF to 10,000 pF (100 V)
CDR11	MIL-PRF-55681/4	Chip, High Frequency (0505)	0.1 pF to 1,000 pF (50 V) Warning! See NASA Parts Advisory NA-048
CDR12	MIL-PRF-55681/4	Chip, High Frequency (0505)	0.1 pF to 1,000 pF (50 V) Warning! See NASA Parts Advisory NA-048
CDR13	MIL-PRF-55681/4	Chip, High Frequency (1111)	0.1 pF to 100 pF (500 V), 110 pF to 200 pF (300 V), 220 pF to 470 pF (200 V), 510 pF to 620 pF (100 V), 680 pF to 5,100 pF (50 V); Warning! S
CDR14	MIL-PRF-55681/4	Chip, High Frequency (1111)	0.1 pF to 100 pF (500 V), 110 pF to 200 pF (300 V), 220 pF to 470 pF (200 V), 510 pF to 620 pF (100 V), 680 pF to 5,100 pF (50 V); Warning!
CDR31	MIL-PRF-55681/7	Metric Chip (2.0 mm x 1.25 mm)	1 pF to 4,700 pF (100 V) 510 pF to 18,000 pF (50 V)
CDR32	MIL-PRF-55681/8	Metric Chip (3.2 mm x 1.6 mm)	1 pF to 15,000 pF (100 V), 1,100 pF to 39,000 pF (50 V)
CDR33	MIL-PRF-55681/9	Metric Chip (3.2 mm x 2.5 mm)	1,000 pF to 27,000 pF (100 V), 2,400 pF to 100,000 pF (50 V)
CDR34	MIL-PRF-55681/10	Metric Chip (4.5 mm x 3.2 mm)	2,200 pF to 56,000 pF (100 V) 5,100 pF to 180,000 pF (50 V)
CDR35	MIL-PRF-55681/11	Metric Chip (4.5 mm x 6.4 mm)	4,700 pF to 150,000 pF (100 V) 11,000 pF to 470,000 pF (50 V)

APPLICATION NOTES FOR MIL-PRF-55681

1) MIL-PRF-123 capacitors are space grade and are recommended for all Level 1 applications.

2) As an alternative to MIL-PRF-123, for Level 1 applications at >= 10 Vdc, MIL-PRF-20, MIL-PRF-39014, or MIL-PRF-55681 capacitors can be used in accordance with the type, value and failure rate guidelines shown in the tables.

3) As an alternative to MIL-PRF-123, for Level 1 low voltage applications (< 10 Vdc), MIL-PRF-20, MIL-PRF-39014, or MIL-PRF-55681 capacitors can be used, if capacitor rated voltage is at least 100 Vdc and flight lots are subjected to lot sample testing per Group B Subgroup 2 of MIL-PRF-123 (Humidity, Steady-State, Low Voltage). These recommendations stem from concerns about the low voltage failure mechanism which has been observed to occur in multilayer ceramic capacitors. In low voltage applications, multilayer ceramic capacitors with thin dielectrics and/or large voids, delaminations, inclusions, microcracks and other defects, may develop low and unstable insulation resistances.

4) For Level 2 applications at >=10 Vdc, capacitors can be used in accordance with the type, value and failure rate guidelines shown in the tables.

5) For Level 2 low voltage applications (< 10 Vdc), capacitor rated voltage should be at least 100 Vdc. Alternatively, parts rated at less than 100 Vdc can be used if flight lots are subjected to lot sample testing per Group B Subgroup 2 of MIL-PRF-123 (Humidity, Steady-State, Low Voltage). These recommendations are prompted by low voltage failure concerns (see note 3).

6) The CDR02 ceramic chip capacitors are intentionally NOT listed in the NASA Parts Selection List. This particular chip, which is offered in MIL-PRF-55681/1, has a large length to width ratio (0.18" x 0.05") which makes this chip highly susceptible to cracking as a result of board flexing.

7) The use of ceramic chip capacitors with Termination Style "W" or "Y" is

NOT recommended

. Termination style "Y" is

pure tin

and termination style "W" gives the manufacturer the option to use either pure tin or a tin-lead alloy as a termination finish. Pure tin finishes are susceptible to the growth of tin whiskers which are capable of bridging electrically isolated surfaces. See the

NPSL Prohibited Materials Section

and associated references for a description of tin whiskers and the hazards they may present.

Revision History for MIL-PRF-55681 Listing in the NPSL

02/11/04	Fixed typo in part numbers for CDR01 listing. The two 50 V parts listed had an incorrect voltage rating identifier.
11/06/03	Updated Application Notesto more explicitly indicate that termination type "Y" (pure tin) and "W" (can be pure tin at supplier discretion) are NOT RECOMMENDED due to possible tin whisker hazard.
02/29/00	Added Link to NASA Parts Advisory NA-048 for ATC "BG" characteristic ceramic chip capacitors made in accordance with MIL-PRF-55681/4
10/13/98	Removed Termination "W" from list of options. This option allows the use of pure tin. Added application note to warn of the risks of tin whisker formation resulting from the use of "pure tin" finishe
05/21/98	Added column to the "styles" page to show the available capacitance range and rated voltages for quick reference.
02/25/98	Corrected the physical dimensions table for CDR31 and the dimension tolerances for CDR14.
02/25/98	Added an application note explaining why CDR02 parts are NOT included in the NPSL for spaceflight applications.
02/25/98	Removed CDR26 through CDR30 from the physical dimensions table because these high voltage chips are NOT available from any qualified sources. Also removed CDR02 from the dimensions table since this is
11/28/97	Made changes indicating the specification conversion to a performance specification (MIL-PRF-55681 instead of MIL-C-55681).
11/28/97	Added a table which specifies the physical dimensions of the various chip styles.
11/28/97	Added additional application note clarification with respect to the low voltage application of these capacitors.
05/01/97	Initial Release of MIL-C-55681 Section in the NPSL

Part Number Ordering Information, example and explanation:

CDR01BX100AKSR where,

CDR	01	B
Style (multiple layer, fixed, unencapsulated, ceramic dielectric, established reliability, chip capacitors conforming to MIL-PRF-55681)	Shape and Dimensions of the capacitor	Rated Temp. Range of -55deg.C to

Part number ordering options are developed using the following criteria:

Style	Detail Specification
CDR01	MIL-PRF-55681/1
CDR03	MIL-PRF-55681/1
CDR04	MIL-PRF-55681/1
CDR05	MIL-PRF-55681/2
CDR06	MIL-PRF-55681/3
CDR11	MIL-PRF-55681/4
CDR12	MIL-PRF-55681/4
CDR13	MIL-PRF-55681/4
CDR14	MIL-PRF-55681/4
CDR31	MIL-PRF-55681/7
CDR32	MIL-PRF-55681/8
CDR33	MIL-PRF-55681/9
CDR34	MIL-PRF-55681/10
CDR35	MIL-PRF-55681/11

Volt./Temp. Limits
BG = 90 +/- 20 ppm/deg.C
BP = 0 +/- 30 ppm/deg.C
BX = +/- 15%

Rated Voltage
A = 50 Vdc
B = 100 Vdc
C = 200 Vdc
D= 300 Vdc
E = 500 Vdc

Capacitance Tolerance
B = +/- 0.10 pF
C = +/- 0.25 pF
D = +/- 0.50 pF
F = +/- 1 %
G = +/- 2 %
J = +/- 5 %
K = +/- 10 %
M = +/- 20 %

Termination Finish
S = Solder-coated, final
M = Palladium-Silver
N = Silver-Nickel-Gold
U = Base Metallization-Barrier, Metal-Solder Coated
W = Base Metallization-Barrier, Metal-Tinned (Tin or Tin/Lead Alloy) (NOT RECOMMENDED FOR SPACE FLIGHT USE. SEE APPLICATION NOTE)
Y = Base Metallization Barrier 100% Tin (NOT RECOMMENDED FOR SPACE FLIGHT USE. SEE APPLICATION NOTE)

Failure Rate Levels
M = 1.0%/1000 hrs (Level 3)
P = 0.1%/1000 hrs (Level 2)
R = 0.01%/1000 hrs (Level 2)
S = 0.001%/1000 hrs (Level 1)

Capacitor Values:

Capacitance values in picofarads (pF) are contained in the following listing. When ordering, the first two digits represent significant figures and the last digit specifies the number of zeroes to follow. For example 101 indicates 100 pF and 102 indicates 1000 pF. The letter "R" shall be used to indicate a decimal point when required. For example 1R0 indicates 1.0 pF; R75 indicates 0.75 pF.

CDR01 Ceramic Chip Capacitors

	Cap.	Rated	Cap.	Termination	Level 1	Level 2	

Part Number	Value (pF)	Voltage (V)	Tol (+/-%)	Finish (@)	(FRL)(#)	(FRL)(#)	Manufacturer
CDR01BP100B%@#	10	100	J, K	S, M, N, U	S	P, R	AVX, KEM, PRE, VIT
CDR01BP120B%@#	12	100	J	S, M, N, U	S	P, R	AVX, KEM, PRE, VIT
CDR01BP150B%@#	15	100	J, K	S, M, N, U	S	P, R	AVX, KEM, PRE, VIT
CDR01BP180B%@#	18	100	J	S, M, N, U	S	P, R	AVX, KEM, PRE, VIT
CDR01BP220B%@#	22	100	J, K	S, M, N, U	S	P, R	AVX, KEM, PRE, VIT
CDR01BP270B%@#	27	100	J	S, M, N, U	S	P, R	AVX, KEM, PRE, VIT
CDR01BP330B%@#	33	100	J, K	S, M, N, U	S	P, R	AVX, KEM, PRE, VIT
CDR01BP390B%@#	39	100	J	S, M, N, U	S	P, R	AVX, KEM, PRE, VIT
	Cap.	Rated	Cap.	Termination	Level 1	Level 2	
Part Number	Value (pF)	Voltage (V)	Tol (+/-%)	Finish (@)	(FRL)(#)	(FRL)(#)	Manufacturer
CDR01BP470B%@#	47	100	J, K	S, M, N, U	S	P, R	AVX, KEM, PRE, VIT
CDR01BP560B%@#	56	100	J	S, M, N, U	S	P, R	AVX, KEM, PRE, VIT
CDR01BP680B%@#	68	100	J, K	S, M, N, U	S	P, R	AVX, KEM, PRE, VIT
CDR01BP820B%@#	82	100	J	S, M, N, U	S	P, R	AVX, KEM, PRE, VIT
CDR01BP101B%@#	100	100	J, K	S, M, N, U	S	P, R	AVX, KEM, PRE, VIT
CDR01BP121B%@#	120	100	J, K	S, M, N, U	S	P, R	AVX, KEM, PRE, VIT
CDR01BX121B%@#	120	100	J, K	S, M, N, U	S	P, R	AVX, KEM, PRE, VIT
CDR01BP151B%@#	150	100	J, K	S, M, N, U	S	P, R	AVX, KEM, PRE, VIT
CDR01BX151B%@#	150	100	J, K	S, M, N, U	S	P, R	AVX, KEM, PRE, VIT
CDR01BP181B%@#	180	100	J, K	S, M, N, U	S	P, R	AVX, KEM, PRE, VIT
	Cap.	Rated	Cap.	Termination	Level 1	Level 2	
Part Number	Value (pF)	Voltage (V)	Tol (+/-%)	Finish (@)	(FRL)(#)	(FRL)(#)	Manufacturer
CDR01BX181B%@#	180	100	J, K	S, M, N, U	S	P, R	AVX, KEM, PRE, VIT
CDR01BX221B%@#	220	100	J, K	S, M, N, U	S	P, R	AVX, KEM, PRE, VIT
CDR01BX271B%@#	270	100	J	S, M, N, U	S	P, R	AVX, KEM, PRE, VIT
CDR01BX331B%@#	330	100	K, M	S, M, N, U	S	P, R	AVX, KEM, PRE, VIT
CDR01BX391B%@#	390	100	K	S, M, N, U	S	P, R	AVX, KEM, PRE, VIT
CDR01BX471B%@#	470	100	K, M	S, M, N, U	S	P, R	AVX, KEM, PRE, VIT
CDR01BX561B%@#	560	100	K	S, M, N, U	S	P, R	AVX, KEM, PRE, VIT
CDR01BX681B%@#	680	100	K, M	S, M, N, U	S	P, R	AVX, KEM, PRE, VIT
	Cap.	Rated	Cap.	Termination	Level 1	Level 2	
Part Number	Value (pF)	Voltage (V)	Tol (+/-%)	Finish (@)	(FRL)(#)	(FRL)(#)	Manufacturer
CDR01BX821B%@#	820	100	K	S, M, N, U	S	P, R	AVX, KEM, PRE, VIT
CDR01BX102B%@#	1000	100	K, M	S, M, N, U	S	P, R	AVX, KEM, PRE, VIT
CDR01BX122B%@#	1200	100	K	S, M, N, U	S	P, R	AVX, KEM, PRE, VIT
CDR01BX152B%@#	1500	100	K, M	S, M, N, U	S	P, R	AVX, KEM, PRE, VIT
CDR01BX182B%@#	1800	100	K	S, M, N, U	S	P, R	AVX, KEM, PRE, VIT
CDR01BX222B%@#	2200	100	K, M	S, M, N, U	S	P, R	AVX, KEM, PRE, VIT
CDR01BX272B%@#	2700	100	K	S, M, N, U	S	P, R	AVX, KEM, PRE, VIT
CDR01BX332B%@#	3300	100	K, M	S, M, N, U	S	P, R	AVX, KEM, PRE, VIT
CDR01BX392A%@#	3900	50	K	S, M, N, U	S	P, R	AVX, KEM, PRE, VIT
CDR01BX472A%@#	4700	50	K, M	S, M, N, U	S	P, R	AVX, KEM, PRE, VIT
	Cap.	Rated	Cap.	Termination	Level 1	Level 2	
Part Number	Value (pF)	Voltage (V)	Tol (+/-%)	Finish (@)	(FRL)(#)	(FRL)(#)	Manufacturer

CDR03 Ceramic Chip Capacitors

	Cap.	Rated	Cap.	Termination	Level 1	Level 2	
Part Number	Value (pF)	Voltage (V)	Tol (+/-%)	Finish (@)	(FRL)(#)	(FRL)(#)	Manufacturer
CDR03BP331B%@#	330	100	J, K	S, M, N, U	S	P, R	AVX, KEM, PRE, VIT
CDR03BP391B%@#	390	100	J	S, M, N, U	S	P, R	AVX, KEM, PRE, VIT
CDR03BP471B%@#	470	100	J, K	S, M, N, U	S	P, R	AVX, KEM, PRE, VIT
CDR03BP561B%@#	560	100	J	S, M, N, U	S	P, R	AVX, KEM, PRE, VIT
CDR03BP681B%@#	680	100	J, K	S, M, N, U	S	P, R	AVX, KEM, PRE, VIT
CDR03BP821B%@#	820	100	J	S, M, N, U	S	P, R	AVX, KEM, PRE, VIT
CDR03BP102B%@#	1000	100	J, K	S, M, N, U	S	P, R	AVX, KEM, PRE, VIT
	Cap.	Rated	Cap.	Termination	Level 1	Level 2	
Part Number	Value (pF)	Voltage (V)	Tol (+/-%)	Finish (@)	(FRL)(#)	(FRL)(#)	Manufacturer
CDR03BX123B%@#	12000	100	K	S, M, N, U	S	P, R	AVX, KEM, PRE, VIT
CDR03BX153B%@#	15000	100	K, M	S, M, N, U	S	P, R	AVX, KEM, PRE, VIT
CDR03BX183B%@#	18000	100	K	S, M, N, U	S	P, R	AVX, KEM, PRE, VIT
CDR03BX223B%@#	22000	100	K, M	S, M, N, U	S	P, R	AVX, KEM, PRE, VIT
CDR03BX273B%@#	27000	100	K	S, M, N, U	S	P, R	AVX, KEM, PRE, VIT
CDR03BX333B%@#	33000	100	K, M	S, M, N, U	S	P, R	AVX, KEM, PRE, VIT
CDR03BX393A%@#	39000	50	K	S, M, N, U	S	P, R	AVX, KEM, PRE, VIT
CDR03BX473A%@#	47000	50	K, M	S, M, N, U	S	P, R	AVX, KEM, PRE, VIT
CDR03BX563A%@#	56000	50	K	S, M, N, U	S	P, R	AVX, KEM, PRE, VIT
CDR03BX683A%@#	68000	50	K, M	S, M, N, U	S	P, R	AVX, KEM, PRE, VIT
	Cap.	Rated	Cap.	Termination	Level 1	Level 2	
Part Number	Value (pF)	Voltage (V)	Tol (+/-%)	Finish (@)	(FRL)(#)	(FRL)(#)	Manufacturer

CDR04 Ceramic Chip Capacitors

	Cap.	Rated	Cap.	Termination	Level 1	Level 2	
Part Number	Value (pF)	Voltage (V)	Tol (+/-%)	Finish (@)	(FRL)(#)	(FRL)(#)	Manufacturer
CDR04BP122B%@#	1200	100	J	S, M, N, U	S	P, R	AVX, KEM, VIT
CDR04BP152B%@#	1500	100	J, K	S, M, N, U	S	P, R	AVX, KEM, VIT
CDR04BP182B%@#	1800	100	J	S, M, N, U	S	P, R	AVX, KEM, VIT
CDR04BP222B%@#	2200	100	J, K	S, M, N, U	S	P, R	AVX, KEM, VIT
CDR04BP272B%@#	2700	100	J	S, M, N, U	S	P, R	AVX, KEM, VIT
CDR04BP332B%@#	3300	100	J, K	S, M, N, U	S	P, R	AVX, KEM, VIT
CDR04BX393B%@#	39000	100	K	S, M, N, U	S	P, R	AVX, KEM, VIT
CDR04BX473B%@#	47000	100	K, N	S, M, N, U	S	P, R	AVX, KEM, VIT
CDR04BX563B%@#	56000	100	K	S, M, N, U	S	P, R	AVX, KEM, VIT
CDR04BX823A%@#	82000	50	K	S, M, N, U	S	P, R	AVX, KEM, VIT
CDR04BX104A%@#	100000	50	K, M	S, M, N, U	S	P, R	AVX, KEM, VIT
CDR04BX124A%@#	120000	50	K	S, M, N, U	S	P, R	AVX, KEM, VIT
CDR04BX154A%@#	150000	50	K, M	S, M, N, U	S	P, R	AVX, KEM, VIT
CDR04BX184A%@#	180000	50	K	S, M, N, U	S	P, R	AVX, KEM, VIT
	Cap.	Rated	Cap.	Termination	Level 1	Level 2	

Part Number	Value (pF)	Voltage (V)	Tol (+/-%)	Finish (@)	(FRL)(#)	(FRL)(#)	Manufacturer

CDR05 Ceramic Chip Capacitors

	Cap.	Rated	Cap.	Termination	Level 1	Level 2	
Part Number	Value (pF)	Voltage (V)	Tol (+/-%)	Finish (@)	(FRL)(#)	(FRL)(#)	Manufacturer
CDR05BP392B%@#	3900	100	J, K	S, M, N, U	S	P, R	AVX, KEM
CDR05BP472B%@#	4700	100	J, K	S, M, N, U	S	P, R	AVX, KEM
CDR05BP562B%@#	5600	100	J, K	S, M, N, U	S	P, R	AVX, KEM
CDR05BX683B%@#	68000	100	K, M	S, M, N, U	S	P, R	AVX, KEM
CDR05BX823B%@#	82000	100	K	S, M, N, U	S	P, R	AVX, KEM
CDR05BX104B%@#	100000	100	K, M	S, M, N, U	S	P, R	AVX, KEM
CDR05BX124B%@#	120000	100	K	S, M, N, U	S	P, R	AVX, KEM
CDR05BX154B%@#	150000	100	K, M	S, M, N, U	S	P, R	AVX, KEM
CDR05BX224A%@#	220000	50	K, M	S, M, N, U	S	P, R	AVX, KEM
CDR05BX274AK@#	270000	50	K	S, M, N, U	S	P, R	AVX, KEM
CDR05BX334A%@#	330000	50	K, M	S, M, N, U	S	P, R	AVX, KEM
	Cap.	Rated	Cap.	Termination	Level 1	Level 2	
Part Number	Value (pF)	Voltage (V)	Tol (+/-%)	Finish (@)	(FRL)(#)	(FRL)(#)	Manufacturer

CDR06 Ceramic Chip Capacitors

	Cap.	Rated	Cap.	Termination	Level 1	Level 2	
Part Number	Value (pF)	Voltage (V)	Tol (+/-%)	Finish (@)	(FRL)(#)	(FRL)(#)	Manufacturer
CDR06BP682B%@#	6800	100	J, K	S, M, N, U	S	P, R	AVX, KEM, VIT
CDR06BP822B%@#	8200	100	J, K	S, M, N, U	S	P, R	AVX, KEM, VIT
CDR06BP103B%@#	10000	100	J, K	S, M, N, U	S	P, R	AVX, KEM, VIT

CDR11 Ceramic Chip Capacitors

	Cap.	Rated	Temp.	Cap.	Termination	Level 1	Level 2	
Part Number	Value (pF)	Voltage (V)	Limits (*)	Tol. (+/-%)	Finish (@)	(FRL)(#)	(FRL)(#)	Manufacturer
CDR11B*0R1A%@#	0.1	50	P, G	B	M, N	S	P, R	AVX, ATC
CDR11B*0R2A%@#	0.2	50	P, G	B	M, N	S	P, R	AVX, ATC
CDR11B*0R3A%@#	0.3	50	P, G	B, C	M, N	S	P, R	AVX, ATC
CDR11B*0R4A%@#	0.4	50	P, G	B, C	M, N	S	P, R	AVX, ATC
CDR11B*0R5A%@#	0.5	50	P, G	B, C, D	M, N	S	P, R	AVX, ATC
CDR11B*0R6A%@#	0.6	50	P, G	B, C, D	M, N	S	P, R	AVX, ATC
CDR11B*0R7A%@#	0.7	50	P, G	B, C, D	M, N	S	P, R	AVX, ATC
CDR11B*0R8A%@#	0.8	50	P, G	B, C, D	M, N	S	P, R	AVX, ATC
CDR11B*0R9A%@#	0.9	50	P, G	B, C, D	M, N	S	P, R	AVX, ATC
CDR11B*1R0A%@#	1.0	50	P, G	B, C, D	M, N	S	P, R	AVX, ATC

	Cap.	Rated	Temp.	Cap.	Termination	Level 1	Level 2	
Part Number	Value (pF)	Voltage (V)	Limits (*)	Tol. (+/-%)	Finish (@)	(FRL)(#)	(FRL)(#)	Manufacturer
CDR11B*1R1A%@#	1.1	50	P, G	B, C, D	M, N	S	P, R	AVX, ATC
CDR11B*1R2A%@#	1.2	50	P, G	B, C, D	M, N	S	P, R	AVX, ATC
CDR11B*1R3A%@#	1.3	50	P, G	B, C, D	M, N	S	P, R	AVX, ATC
CDR11B*1R4A%@#	1.4	50	P, G	B, C, D	M, N	S	P, R	AVX, ATC
CDR11B*1R5A%@#	1.5	50	P, G	B, C, D	M, N	S	P, R	AVX, ATC
CDR11B*1R6A%@#	1.6	50	P, G	B, C, D	M, N	S	P, R	AVX, ATC
CDR11B*1R7A%@#	1.7	50	P, G	B, C, D	M, N	S	P, R	AVX, ATC
CDR11B*1R8A%@#	1.8	50	P, G	B, C, D	M, N	S	P, R	AVX, ATC
CDR11B*1R9A%@#	1.9	50	P, G	B, C, D	M, N	S	P, R	AVX, ATC
	Cap.	Rated	Temp.	Cap.	Termination	Level 1	Level 2	
Part Number	Value (pF)	Voltage (V)	Limits (*)	Tol. (+/-%)	Finish (@)	(FRL)(#)	(FRL)(#)	Manufacturer
CDR11B*2R0A%@#	2.0	50	P, G	B, C, D	M, N	S	P, R	AVX, ATC
CDR11B*2R1A%@#	2.1	50	P, G	B, C, D	M, N	S	P, R	AVX, ATC
CDR11B*2R2A%@#	2.2	50	P, G	B, C, D	M, N	S	P, R	AVX, ATC
CDR11B*2R4A%@#	2.4	50	P, G	B, C, D	M, N	S	P, R	AVX, ATC
CDR11B*2R7A%@#	2.7	50	P, G	B, C, D	M, N	S	P, R	AVX, ATC
CDR11B*3R0A%@#	3.0	50	P, G	B, C, D	M, N	S	P, R	AVX, ATC
CDR11B*3R3A%@#	3.3	50	P, G	B, C, D	M, N	S	P, R	AVX, ATC
CDR11B*3R6A%@#	3.6	50	P, G	B, C, D	M, N	S	P, R	AVX, ATC
CDR11B*3R9A%@#	3.9	50	P, G	B, C, D	M, N	S	P, R	AVX, ATC
	Cap.	Rated	Temp.	Cap.	Termination	Level 1	Level 2	
Part Number	Value (pF)	Voltage (V)	Limits (*)	Tol. (+/-%)	Finish (@)	(FRL)(#)	(FRL)(#)	Manufacturer
CDR11B*4R3A%@#	4.3	50	P, G	B, C, D	M, N	S	P, R	AVX, ATC
CDR11B*4R7A%@#	4.7	50	P, G	B, C, D	M, N	S	P, R	AVX, ATC
CDR11B*5R1A%@#	5.1	50	P, G	B, C, D	M, N	S	P, R	AVX, ATC
CDR11B*5R6A%@#	5.6	50	P, G	B, C, D	M, N	S	P, R	AVX, ATC
CDR11B*6R2A%@#	6.2	50	P, G	B, C, D	M, N	S	P, R	AVX, ATC
CDR11B*6R8A%@#	6.8	50	P, G	B, C, J, K, M	M, N	S	P, R	AVX, ATC
CDR11B*7R5A%@#	7.5	50	P, G	B, C, J, K, M	M, N	S	P, R	AVX, ATC
CDR11B*8R2A%@#	8.2	50	P, G	B, C, J, K, M	M, N	S	P, R	AVX, ATC
CDR11B*9R1A%@#	9.1	50	P, G	B, C, J, K, M	M, N	S	P, R	AVX, ATC
	Cap.	Rated	Temp.	Cap.	Termination	Level 1	Level 2	
Part Number	Value (pF)	Voltage (V)	Limits (*)	Tol. (+/-%)	Finish (@)	(FRL)(#)	(FRL)(#)	Manufacturer
CDR11B*100A%@#	10	50	P, G	F, G, J, K, M	M, N	S	P, R	AVX, ATC
CDR11B*110A%@#	11	50	P, G	F, G, J, K, M	M, N	S	P, R	AVX, ATC
CDR11B*120A%@#	12	50	P, G	F, G, J, K, M	M, N	S	P, R	AVX, ATC
CDR11B*130A%@#	13	50	P, G	F, G, J, K, M	M, N	S	P, R	AVX, ATC
CDR11B*150A%@#	15	50	P, G	F, G, J, K, M	M, N	S	P, R	AVX, ATC
CDR11B*160A%@#	16	50	P, G	F, G, J, K, M	M, N	S	P, R	AVX, ATC
CDR11B*180A%@#	18	50	P, G	F, G, J, K, M	M, N	S	P, R	AVX, ATC
CDR11B*200A%@#	20	50	P, G	F, G, J, K, M	M, N	S	P, R	AVX, ATC
CDR11B*220A%@#	22	50	P, G	F, G, J, K, M	M, N	S	P, R	AVX, ATC
	Cap.	Rated	Temp.	Cap.	Termination	Level 1	Level 2	
Part Number	Value (pF)	Voltage (V)	Limits (*)	Tol. (+/-%)	Finish (@)	(FRL)(#)	(FRL)(#)	Manufacturer
CDR11B*240A%@#	24	50	P, G	F, G, J, K, M	M, N	S	P, R	AVX, ATC

CDR11B*270A%@#	27	50	P, G	F, G, J, K, M	M, N	S	P, R	AVX, ATC
CDR11B*300A%@#	30	50	P, G	F, G, J, K, M	M, N	S	P, R	AVX, ATC
CDR11B*330A%@#	33	50	P, G	F, G, J, K, M	M, N	S	P, R	AVX, ATC
CDR11B*360A%@#	36	50	P, G	F, G, J, K, M	M, N	S	P, R	AVX, ATC
CDR11B*390A%@#	39	50	P, G	F, G, J, K, M	M, N	S	P, R	AVX, ATC
CDR11B*430A%@#	43	50	P, G	F, G, J, K, M	M, N	S	P, R	AVX, ATC
CDR11B*470A%@#	47	50	P, G	F, G, J, K, M	M, N	S	P, R	AVX, ATC
CDR11B*510A%@#	51	50	P, G	F, G, J, K, M	M, N	S	P, R	AVX, ATC
	Cap.	Rated	Temp.	Cap.	Termination	Level 1	Level 2	
Part Number	Value (pF)	Voltage (V)	Limits (*)	Tol. (+/-%)	Finish (@)	(FRL)(#)	(FRL)(#)	Manufacturer
CDR11B*560A%@#	56	50	P, G	F, G, J, K, M	M, N	S	P, R	AVX, ATC
CDR11B*620A%@#	62	50	P, G	F, G, J, K, M	M, N	S	P, R	AVX, ATC
CDR11B*680A%@#	68	50	P, G	F, G, J, K, M	M, N	S	P, R	AVX, ATC
CDR11B*750A%@#	75	50	P, G	F, G, J, K, M	M, N	S	P, R	AVX, ATC
CDR11B*820A%@#	82	50	P, G	F, G, J, K, M	M, N	S	P, R	AVX, ATC
CDR11B*910A%@#	91	50	P, G	F, G, J, K, M	M, N	S	P, R	AVX, ATC
CDR11B*101A%@#	100	50	P, G	F, G, J, K, M	M, N	S	P, R	AVX, ATC
CDR11BP111A%@#	110	50	P	F, G, J, K, M	M, N	S	P, R	AVX, ATC
CDR11BP121A%@#	120	50	P	F, G, J, K, M	M, N	S	P, R	AVX, ATC
	Cap.	Rated	Temp.	Cap.	Termination	Level 1	Level 2	
Part Number	Value (pF)	Voltage (V)	Limits (*)	Tol. (+/-%)	Finish (@)	(FRL)(#)	(FRL)(#)	Manufacturer
CDR11BP131A%@#	130	50	P	F, G, J, K, M	M, N	S	P, R	AVX, ATC
CDR11BP151A%@#	150	50	P	F, G, J, K, M	M, N	S	P, R	AVX, ATC
CDR11BP161A%@#	160	50	P	F, G, J, K, M	M, N	S	P, R	AVX, ATC
CDR11BP181A%@#	180	50	P	F, G, J, K, M	M, N	S	P, R	AVX, ATC
CDR11BP201A%@#	200	50	P	F, G, J, K, M	M, N	S	P, R	AVX, ATC
CDR11BP221A%@#	220	50	P	F, G, J, K, M	M, N	S	P, R	AVX, ATC
CDR11BP241A%@#	240	50	P	F, G, J, K, M	M, N	S	P, R	AVX, ATC
CDR11BP271A%@#	270	50	P	F, G, J, K, M	M, N	S	P, R	AVX, ATC
CDR11BP301A%@#	300	50	P	F, G, J, K, M	M, N	S	P, R	AVX, ATC
	Cap.	Rated	Temp.	Cap.	Termination	Level 1	Level 2	
Part Number	Value (pF)	Voltage (V)	Limits (*)	Tol. (+/-%)	Finish (@)	(FRL)(#)	(FRL)(#)	Manufacturer
CDR11BP331A%@#	330	50	P	F, G, J, K, M	M, N	S	P, R	AVX, ATC
CDR11BP361A%@#	360	50	P	F, G, J, K, M	M, N	S	P, R	AVX, ATC
CDR11BP391A%@#	390	50	P	F, G, J, K, M	M, N	S	P, R	AVX, ATC
CDR11BP431A%@#	430	50	P	F, G, J, K, M	M, N	S	P, R	AVX, ATC
CDR11BP471A%@#	470	50	P	F, G, J, K, M	M, N	S	P, R	AVX, ATC
CDR11BP511A%@#	510	50	P	F, G, J, K, M	M, N	S	P, R	AVX, ATC
CDR11BP561A%@#	560	50	P	F, G, J, K, M	M, N	S	P, R	AVX, ATC
CDR11BP621A%@#	620	50	P	F, G, J, K, M	M, N	S	P, R	AVX, ATC
CDR11BP681A%@#	680	50	P	F, G, J, K, M	M, N	S	P, R	AVX, ATC
	Cap.	Rated	Temp.	Cap.	Termination	Level 1	Level 2	
Part Number	Value (pF)	Voltage (V)	Limits (*)	Tol. (+/-%)	Finish (@)	(FRL)(#)	(FRL)(#)	Manufacturer
CDR11BP751A%@#	750	50	P	F, G, J, K, M	M, N	S	P, R	AVX, ATC
CDR11BP821A%@#	820	50	P	F, G, J, K, M	M, N	S	P, R	AVX, ATC
CDR11BP911A%@#	910	50	P	F, G, J, K, M	M, N	S	P, R	AVX, ATC
CDR11BP102A%@#	1000	50	P	F, G, J, K, M	M, N	S	P, R	AVX, ATC

	Cap.	Rated	Temp.	Cap.	Termination	Level 1	Level 2	
Part Number	Value (pF)	Voltage (V)	Limits (*)	Tol. (+/-%)	Finish (@)	(FRL)(#)	(FRL)(#)	Manufacturer
CDR12B*0R1A%@#	0.1	50	P, G	B	S, U	S	P, R	AVX, ATC
CDR12B*0R2A%@#	0.2	50	P, G	B	S, U	S	P, R	AVX, ATC
CDR12B*0R3A%@#	0.3	50	P, G	B, C	S, U	S	P, R	AVX, ATC
CDR12B*0R4A%@#	0.4	50	P, G	B, C	S, U	S	P, R	AVX, ATC
CDR12B*0R5A%@#	0.5	50	P, G	B, C, D	S, U	S	P, R	AVX, ATC
CDR12B*0R6A%@#	0.6	50	P, G	B, C, D	S, U	S	P, R	AVX, ATC
CDR12B*0R7A%@#	0.7	50	P, G	B, C, D	S, U	S	P, R	AVX, ATC
CDR12B*0R8A%@#	0.8	50	P, G	B, C, D	S, U	S	P, R	AVX, ATC
CDR12B*0R9A%@#	0.9	50	P, G	B, C, D	S, U	S	P, R	AVX, ATC
CDR12B*1R0A%@#	1.0	50	P, G	B, C, D	S, U	S	P, R	AVX, ATC
	Cap.	Rated	Temp.	Cap.	Termination	Level 1	Level 2	
Part Number	Value (pF)	Voltage (V)	Limits (*)	Tol. (+/-%)	Finish (@)	(FRL)(#)	(FRL)(#)	Manufacturer
CDR12B*1R1A%@#	1.1	50	P, G	B, C, D	S, U	S	P, R	AVX, ATC
CDR12B*1R2A%@#	1.2	50	P, G	B, C, D	S, U	S	P, R	AVX, ATC
CDR12B*1R3A%@#	1.3	50	P, G	B, C, D	S, U	S	P, R	AVX, ATC
CDR12B*1R4A%@#	1.4	50	P, G	B, C, D	S, U	S	P, R	AVX, ATC
CDR12B*1R5A%@#	1.5	50	P, G	B, C, D	S, U	S	P, R	AVX, ATC
CDR12B*1R6A%@#	1.6	50	P, G	B, C, D	S, U	S	P, R	AVX, ATC
CDR12B*1R7A%@#	1.7	50	P, G	B, C, D	S, U	S	P, R	AVX, ATC
CDR12B*1R8A%@#	1.8	50	P, G	B, C, D	S, U	S	P, R	AVX, ATC
CDR12B*1R9A%@#	1.9	50	P, G	B, C, D	S, U	S	P, R	AVX, ATC
	Cap.	Rated	Temp.	Cap.	Termination	Level 1	Level 2	
Part Number	Value (pF)	Voltage (V)	Limits (*)	Tol. (+/-%)	Finish (@)	(FRL)(#)	(FRL)(#)	Manufacturer
CDR12B*2R0A%@#	2.0	50	P, G	B, C, D	S, U	S	P, R	AVX, ATC
CDR12B*2R1A%@#	2.1	50	P, G	B, C, D	S, U	S	P, R	AVX, ATC
CDR12B*2R2A%@#	2.2	50	P, G	B, C, D	S, U	S	P, R	AVX, ATC
CDR12B*2R4A%@#	2.4	50	P, G	B, C, D	S, U	S	P, R	AVX, ATC
CDR12B*2R7A%@#	2.7	50	P, G	B, C, D	S, U	S	P, R	AVX, ATC
CDR12B*3R0A%@#	3.0	50	P, G	B, C, D	S, U	S	P, R	AVX, ATC
CDR12B*3R3A%@#	3.3	50	P, G	B, C, D	S, U	S	P, R	AVX, ATC
CDR12B*3R6A%@#	3.6	50	P, G	B, C, D	S, U	S	P, R	AVX, ATC
CDR12B*3R9A%@#	3.9	50	P, G	B, C, D	S, U	S	P, R	AVX, ATC
	Cap.	Rated	Temp.	Cap.	Termination	Level 1	Level 2	
Part Number	Value (pF)	Voltage (V)	Limits (*)	Tol. (+/-%)	Finish (@)	(FRL)(#)	(FRL)(#)	Manufacturer
CDR12B*4R3A%@#	4.3	50	P, G	B, C, D	S, U	S	P, R	AVX, ATC
CDR12B*4R7A%@#	4.7	50	P, G	B, C, D	S, U	S	P, R	AVX, ATC
CDR12B*5R1A%@#	5.1	50	P, G	B, C, D	S, U	S	P, R	AVX, ATC
CDR12B*5R6A%@#	5.6	50	P, G	B, C, D	S, U	S	P, R	AVX, ATC
CDR12B*6R2A%@#	6.2	50	P, G	B, C, D	S, U	S	P, R	AVX, ATC
CDR12B*6R8A%@#	6.8	50	P, G	B, C, J, K, M	S, U	S	P, R	AVX, ATC

CDR12B*7R5A%@#	7.5	50	P, G	B, C, J, K, M	S, U	S	P, R	AVX, ATC
CDR12B*8R2A%@#	8.2	50	P, G	B, C, J, K, M	S, U	S	P, R	AVX, ATC
CDR12B*9R1A%@#	9.1	50	P, G	B, C, J, K, M	S, U	S	P, R	AVX, ATC
	Cap.	Rated	Temp.	Cap.	Termination	Level 1	Level 2	
Part Number	Value (pF)	Voltage (V)	Limits (*)	Tol. (+/-%)	Finish (@)	(FRL)(#)	(FRL)(#)	Manufacturer
CDR12B*100A%@#	10	50	P, G	F, G, J, K, M	S, U	S	P, R	AVX, ATC
CDR12B*110A%@#	11	50	P, G	F, G, J, K, M	S, U	S	P, R	AVX, ATC
CDR12B*120A%@#	12	50	P, G	F, G, J, K, M	S, U	S	P, R	AVX, ATC
CDR12B*130A%@#	13	50	P, G	F, G, J, K, M	S, U	S	P, R	AVX, ATC
CDR12B*150A%@#	15	50	P, G	F, G, J, K, M	S, U	S	P, R	AVX, ATC
CDR12B*160A%@#	16	50	P, G	F, G, J, K, M	S, U	S	P, R	AVX, ATC
CDR12B*180A%@#	18	50	P, G	F, G, J, K, M	S, U	S	P, R	AVX, ATC
CDR12B*200A%@#	20	50	P, G	F, G, J, K, M	S, U	S	P, R	AVX, ATC
CDR12B*220A%@#	22	50	P, G	F, G, J, K, M	S, U	S	P, R	AVX, ATC
	Cap.	Rated	Temp.	Cap.	Termination	Level 1	Level 2	
Part Number	Value (pF)	Voltage (V)	Limits (*)	Tol. (+/-%)	Finish (@)	(FRL)(#)	(FRL)(#)	Manufacturer
CDR12B*240A%@#	24	50	P, G	F, G, J, K, M	S, U	S	P, R	AVX, ATC
CDR12B*270A%@#	27	50	P, G	F, G, J, K, M	S, U	S	P, R	AVX, ATC
CDR12B*300A%@#	30	50	P, G	F, G, J, K, M	S, U	S	P, R	AVX, ATC
CDR12B*330A%@#	33	50	P, G	F, G, J, K, M	S, U	S	P, R	AVX, ATC
CDR12B*360A%@#	36	50	P, G	F, G, J, K, M	S, U	S	P, R	AVX, ATC
CDR12B*390A%@#	39	50	P, G	F, G, J, K, M	S, U	S	P, R	AVX, ATC
CDR12B*430A%@#	43	50	P, G	F, G, J, K, M	S, U	S	P, R	AVX, ATC
CDR12B*470A%@#	47	50	P, G	F, G, J, K, M	S, U	S	P, R	AVX, ATC
CDR12B*510A%@#	51	50	P, G	F, G, J, K, M	S, U	S	P, R	AVX, ATC
	Cap.	Rated	Temp.	Cap.	Termination	Level 1	Level 2	
Part Number	Value (pF)	Voltage (V)	Limits (*)	Tol. (+/-%)	Finish (@)	(FRL)(#)	(FRL)(#)	Manufacturer
CDR12B*560A%@#	56	50	P, G	F, G, J, K, M	S, U	S	P, R	AVX, ATC
CDR12B*620A%@#	62	50	P, G	F, G, J, K, M	S, U	S	P, R	AVX, ATC
CDR12B*680A%@#	68	50	P, G	F, G, J, K, M	S, U	S	P, R	AVX, ATC
CDR12B*750A%@#	75	50	P, G	F, G, J, K, M	S, U	S	P, R	AVX, ATC
CDR12B*820A%@#	82	50	P, G	F, G, J, K, M	S, U	S	P, R	AVX, ATC
CDR12B*910A%@#	91	50	P, G	F, G, J, K, M	S, U	S	P, R	AVX, ATC
CDR12B*101A%@#	100	50	P, G	F, G, J, K, M	S, U	S	P, R	AVX, ATC
CDR12BP111A%@#	110	50	P	F, G, J, K, M	S, U	S	P, R	AVX, ATC
CDR12BP121A%@#	120	50	P	F, G, J, K, M	S, U	S	P, R	AVX, ATC
	Cap.	Rated	Temp.	Cap.	Termination	Level 1	Level 2	
Part Number	Value (pF)	Voltage (V)	Limits (*)	Tol. (+/-%)	Finish (@)	(FRL)(#)	(FRL)(#)	Manufacturer
CDR12BP131A%@#	130	50	P	F, G, J, K, M	S, U	S	P, R	AVX, ATC
CDR12BP151A%@#	150	50	P	F, G, J, K, M	S, U	S	P, R	AVX, ATC
CDR12BP161A%@#	160	50	P	F, G, J, K, M	S, U	S	P, R	AVX, ATC
CDR12BP181A%@#	180	50	P	F, G, J, K, M	S, U	S	P, R	AVX, ATC
CDR12BP201A%@#	200	50	P	F, G, J, K, M	S, U	S	P, R	AVX, ATC
CDR12BP221A%@#	220	50	P	F, G, J, K, M	S, U	S	P, R	AVX, ATC
CDR12BP241A%@#	240	50	P	F, G, J, K, M	S, U	S	P, R	AVX, ATC
CDR12BP271A%@#	270	50	P	F, G, J, K, M	S, U	S	P, R	AVX, ATC
CDR12BP301A%@#	300	50	P	F, G, J, K, M	S, U	S	P, R	AVX, ATC

	Cap.	Rated	Temp.	Cap.	Termination	Level 1	Level 2	
Part Number	Value (pF)	Voltage (V)	Limits (*)	Tol. (+/-%)	Finish (@)	(FRL)(#)	(FRL)(#)	Manufacturer
CDR12BP331A%@#	330	50	P	F, G, J, K, M	S, U	S	P, R	AVX, ATC
CDR12BP361A%@#	360	50	P	F, G, J, K, M	S, U	S	P, R	AVX, ATC
CDR12BP391A%@#	390	50	P	F, G, J, K, M	S, U	S	P, R	AVX, ATC
CDR12BP431A%@#	430	50	P	F, G, J, K, M	S, U	S	P, R	AVX, ATC
CDR12BP471A%@#	470	50	P	F, G, J, K, M	S, U	S	P, R	AVX, ATC
CDR12BP511A%@#	510	50	P	F, G, J, K, M	S, U	S	P, R	AVX, ATC
CDR12BP561A%@#	560	50	P	F, G, J, K, M	S, U	S	P, R	AVX, ATC
CDR12BP621A%@#	620	50	P	F, G, J, K, M	S, U	S	P, R	AVX, ATC
CDR12BP681A%@#	680	50	P	F, G, J, K, M	S, U	S	P, R	AVX, ATC
	Cap.	Rated	Temp.	Cap.	Termination	Level 1	Level 2	
Part Number	Value (pF)	Voltage (V)	Limits (*)	Tol. (+/-%)	Finish (@)	(FRL)(#)	(FRL)(#)	Manufacturer
CDR12BP751A%@#	750	50	P	F, G, J, K, M	S, U	S	P, R	AVX, ATC
CDR12BP821A%@#	820	50	P	F, G, J, K, M	S, U	S	P, R	AVX, ATC
CDR12BP911A%@#	910	50	P	F, G, J, K, M	S, U	S	P, R	AVX, ATC
CDR12BP102A%@#	1000	50	P	F, G, J, K, M	S, U	S	P, R	AVX, ATC

CDR13 Ceramic Chip Capacitors

	Cap.	Rated	Temp.	Cap.	Termination	Level 1	Level 2	
Part Number	Value (pF)	Voltage (V)	Limits (*)	Tol. (+/-%)	Finish (@)	(FRL)(#)	(FRL)(#)	Manufacturer
CDR13B*0R1E%@#	0.1	500	P, G	B	M, N	S	P, R	AVX, ATC
CDR13B*0R2E%@#	0.2	500	P, G	B	M, N	S	P, R	AVX, ATC
CDR13B*0R3E%@#	0.3	500	P, G	B, C	M, N	S	P, R	AVX, ATC
CDR13B*0R4E%@#	0.4	500	P, G	B, C	M, N	S	P, R	AVX, ATC
CDR13B*0R5E%@#	0.5	500	P, G	B, C, D	M, N	S	P, R	AVX, ATC
CDR13B*0R6E%@#	0.6	500	P, G	B, C, D	M, N	S	P, R	AVX, ATC
CDR13B*0R7E%@#	0.7	500	P, G	B, C, D	M, N	S	P, R	AVX, ATC
CDR13B*0R8E%@#	0.8	500	P, G	B, C, D	M, N	S	P, R	AVX, ATC
CDR13B*0R9E%@#	0.9	500	P, G	B, C, D	M, N	S	P, R	AVX, ATC
CDR13B*1R0E%@#	1.0	500	P, G	B, C, D	M, N	S	P, R	AVX, ATC
	Cap.	Rated	Temp.	Cap.	Termination	Level 1	Level 2	
Part Number	Value (pF)	Voltage (V)	Limits (*)	Tol. (+/-%)	Finish (@)	(FRL)(#)	(FRL)(#)	Manufacturer
CDR13B*1R1E%@#	1.1	500	P, G	B, C, D	M, N	S	P, R	AVX, ATC
CDR13B*1R2E%@#	1.2	500	P, G	B, C, D	M, N	S	P, R	AVX, ATC
CDR13B*1R3E%@#	1.3	500	P, G	B, C, D	M, N	S	P, R	AVX, ATC
CDR13B*1R4E%@#	1.4	500	P, G	B, C, D	M, N	S	P, R	AVX, ATC
CDR13B*1R5E%@#	1.5	500	P, G	B, C, D	M, N	S	P, R	AVX, ATC
CDR13B*1R6E%@#	1.6	500	P, G	B, C, D	M, N	S	P, R	AVX, ATC
CDR13B*1R7E%@#	1.7	500	P, G	B, C, D	M, N	S	P, R	AVX, ATC
CDR13B*1R8E%@#	1.8	500	P, G	B, C, D	M, N	S	P, R	AVX, ATC
CDR13B*1R9E%@#	1.9	500	P, G	B, C, D	M, N	S	P, R	AVX, ATC
	Cap.	Rated	Temp.	Cap.	Termination	Level 1	Level 2	
Part Number	Value (pF)	Voltage (V)	Limits (*)	Tol. (+/-%)	Finish (@)	(FRL)(#)	(FRL)(#)	Manufacturer

CDR13B*2R0E%@#	2.0	500	P, G	B, C, D	M, N	S	P, R	AVX, ATC
CDR13B*2R1E%@#	2.1	500	P, G	B, C, D	M, N	S	P, R	AVX, ATC
CDR13B*2R2E%@#	2.2	500	P, G	B, C, D	M, N	S	P, R	AVX, ATC
CDR13B*2R4E%@#	2.4	500	P, G	B, C, D	M, N	S	P, R	AVX, ATC
CDR13B*2R7E%@#	2.7	500	P, G	B, C, D	M, N	S	P, R	AVX, ATC
CDR13B*3R0E%@#	3.0	500	P, G	B, C, D	M, N	S	P, R	AVX, ATC
CDR13B*3R3E%@#	3.3	500	P, G	B, C, D	M, N	S	P, R	AVX, ATC
CDR13B*3R6E%@#	3.6	500	P, G	B, C, D	M, N	S	P, R	AVX, ATC
CDR13B*3R9E%@#	3.9	500	P, G	B, C, D	M, N	S	P, R	AVX, ATC
	Cap.	Rated	Temp.	Cap.	Termination	Level 1	Level 2	
Part Number	Value (pF)	Voltage (V)	Limits (*)	Tol. (+/-%)	Finish (@)	(FRL)(#)	(FRL)(#)	Manufacturer
CDR13B*4R3E%@#	4.3	500	P, G	B, C, D	M, N	S	P, R	AVX, ATC
CDR13B*4R7E%@#	4.7	500	P, G	B, C, D	M, N	S	P, R	AVX, ATC
CDR13B*5R1E%@#	5.1	500	P, G	B, C, D	M, N	S	P, R	AVX, ATC
CDR13B*5R6E%@#	5.6	500	P, G	B, C, D	M, N	S	P, R	AVX, ATC
CDR13B*6R2E%@#	6.2	500	P, G	B, C, D	M, N	S	P, R	AVX, ATC
CDR13B*6R8E%@#	6.8	500	P, G	B, C, J, K, M	M, N	S	P, R	AVX, ATC
CDR13B*7R5E%@#	7.5	500	P, G	B, C, J, K, M	M, N	S	P, R	AVX, ATC
CDR13B*8R2E%@#	8.2	500	P, G	B, C, J, K, M	M, N	S	P, R	AVX, ATC
CDR13B*9R1E%@#	9.1	500	P, G	B, C, J, K, M	M, N	S	P, R	AVX, ATC
	Cap.	Rated	Temp.	Cap.	Termination	Level 1	Level 2	
Part Number	Value (pF)	Voltage (V)	Limits (*)	Tol. (+/-%)	Finish (@)	(FRL)(#)	(FRL)(#)	Manufacturer
CDR13B*100E%@#	10	500	P, G	B, C, J, K, M	M, N	S	P, R	AVX, ATC
CDR13B*110E%@#	11	500	P, G	B, C, J, K, M	M, N	S	P, R	AVX, ATC
CDR13B*120E%@#	12	500	P, G	B, C, J, K, M	M, N	S	P, R	AVX, ATC
CDR13B*130E%@#	13	500	P, G	B, C, J, K, M	M, N	S	P, R	AVX, ATC
CDR13B*150E%@#	15	500	P, G	B, C, J, K, M	M, N	S	P, R	AVX, ATC
CDR13B*160E%@#	16	500	P, G	B, C, J, K, M	M, N	S	P, R	AVX, ATC
CDR13B*180E%@#	18	500	P, G	B, C, J, K, M	M, N	S	P, R	AVX, ATC
CDR13B*200E%@#	20	500	P, G	B, C, J, K, M	M, N	S	P, R	AVX, ATC
CDR13B*220E%@#	22	500	P, G	B, C, J, K, M	M, N	S	P, R	AVX, ATC
	Cap.	Rated	Temp.	Cap.	Termination	Level 1	Level 2	
Part Number	Value (pF)	Voltage (V)	Limits (*)	Tol. (+/-%)	Finish (@)	(FRL)(#)	(FRL)(#)	Manufacturer
CDR13B*240E%@#	24	500	P, G	B, C, J, K, M	M, N	S	P, R	AVX, ATC
CDR13B*270E%@#	27	500	P, G	B, C, J, K, M	M, N	S	P, R	AVX, ATC
CDR13B*300E%@#	30	500	P, G	B, C, J, K, M	M, N	S	P, R	AVX, ATC
CDR13B*330E%@#	33	500	P, G	B, C, J, K, M	M, N	S	P, R	AVX, ATC
CDR13B*360E%@#	36	500	P, G	B, C, J, K, M	M, N	S	P, R	AVX, ATC
CDR13B*390E%@#	39	500	P, G	B, C, J, K, M	M, N	S	P, R	AVX, ATC
CDR13B*430E%@#	43	500	P, G	B, C, J, K, M	M, N	S	P, R	AVX, ATC
CDR13B*470E%@#	47	500	P, G	F, G, J, K, M	M, N	S	P, R	AVX, ATC
CDR13B*510E%@#	51	500	P, G	F, G, J, K, M	M, N	S	P, R	AVX, ATC
	Cap.	Rated	Temp.	Cap.	Termination	Level 1	Level 2	
Part Number	Value (pF)	Voltage (V)	Limits (*)	Tol. (+/-%)	Finish (@)	(FRL)(#)	(FRL)(#)	Manufacturer
CDR13B*560E%@#	56	500	P, G	F, G, J, K, M	M, N	S	P, R	AVX, ATC
CDR13B*620E%@#	62	500	P, G	F, G, J, K, M	M, N	S	P, R	AVX, ATC
CDR13B*680E%@#	68	500	P, G	F, G, J, K, M	M, N	S	P, R	AVX, ATC

CDR13B*750E%@#	75	500	P, G	F, G, J, K, M	M, N	S	P, R	AVX, ATC
CDR13B*820E%@#	82	500	P, G	F, G, J, K, M	M, N	S	P, R	AVX, ATC
CDR13B*910E%@#	91	500	P, G	F, G, J, K, M	M, N	S	P, R	AVX, ATC
CDR13B*101E%@#	100	500	P, G	F, G, J, K, M	M, N	S	P, R	AVX, ATC
CDR13B*111D%@#	110	300	P, G	F, G, J, K, M	M, N	S	P, R	AVX, ATC
CDR13B*121D%@#	120	300	P, G	F, G, J, K, M	M, N	S	P, R	AVX, ATC
	Cap.	Rated	Temp.	Cap.	Termination	Level 1	Level 2	
Part Number	Value (pF)	Voltage (V)	Limits (*)	Tol. (+/-%)	Finish (@)	(FRL)(#)	(FRL)(#)	Manufacturer
CDR13B*131D%@#	130	300	P, G	F, G, J, K, M	M, N	S	P, R	AVX, ATC
CDR13B*151D%@#	150	300	P, G	F, G, J, K, M	M, N	S	P, R	AVX, ATC
CDR13B*161D%@#	160	300	P, G	F, G, J, K, M	M, N	S	P, R	AVX, ATC
CDR13B*181D%@#	180	300	P, G	F, G, J, K, M	M, N	S	P, R	AVX, ATC
CDR13B*201D%@#	200	300	P, G	F, G, J, K, M	M, N	S	P, R	AVX, ATC
CDR13B*221C%@#	220	200	P, G	F, G, J, K, M	M, N	S	P, R	AVX, ATC
CDR13B*241C%@#	240	200	P, G	F, G, J, K, M	M, N	S	P, R	AVX, ATC
CDR13B*271C%@#	270	200	P, G	F, G, J, K, M	M, N	S	P, R	AVX, ATC
CDR13B*301C%@#	300	200	P, G	F, G, J, K, M	M, N	S	P, R	AVX, ATC
	Cap.	Rated	Temp.	Cap.	Termination	Level 1	Level 2	
Part Number	Value (pF)	Voltage (V)	Limits (*)	Tol. (+/-%)	Finish (@)	(FRL)(#)	(FRL)(#)	Manufacturer
CDR13B*331C%@#	330	200	P, G	F, G, J, K, M	M, N	S	P, R	AVX, ATC
CDR13B*361C%@#	360	200	P, G	F, G, J, K, M	M, N	S	P, R	AVX, ATC
CDR13B*391C%@#	390	200	P, G	F, G, J, K, M	M, N	S	P, R	AVX, ATC
CDR13B*431C%@#	430	200	P, G	F, G, J, K, M	M, N	S	P, R	AVX, ATC
CDR13B*471C%@#	470	200	P, G	F, G, J, K, M	M, N	S	P, R	AVX, ATC
CDR13B*511B%@#	510	100	P, G	F, G, J, K, M	M, N	S	P, R	AVX, ATC
CDR13B*561B%@#	560	100	P, G	F, G, J, K, M	M, N	S	P, R	AVX, ATC
CDR13B*621B%@#	620	100	P, G	F, G, J, K, M	M, N	S	P, R	AVX, ATC
CDR13B*681A%@#	680	50	P, G	F, G, J, K, M	M, N	S	P, R	AVX, ATC
	Cap.	Rated	Temp.	Cap.	Termination	Level 1	Level 2	
Part Number	Value (pF)	Voltage (V)	Limits (*)	Tol. (+/-%)	Finish (@)	(FRL)(#)	(FRL)(#)	Manufacturer
CDR13B*751A%@#	750	50	P, G	F, G, J, K, M	M, N	S	P, R	AVX, ATC
CDR13B*821A%@#	820	50	P, G	F, G, J, K, M	M, N	S	P, R	AVX, ATC
CDR13B*911A%@#	910	50	P, G	F, G, J, K, M	M, N	S	P, R	AVX, ATC
CDR13B*102A%@#	1000	50	P, G	F, G, J, K, M	M, N	S	P, R	AVX, ATC
CDR13BP112A%@#	1100	50	P	F, G, J, K, M	M, N	S	P, R	AVX, ATC
CDR13BP122A%@#	1200	50	P	F, G, J, K, M	M, N	S	P, R	AVX, ATC
CDR13BP132A%@#	1300	50	P	F, G, J, K, M	M, N	S	P, R	AVX, ATC
CDR13BP152A%@#	1500	50	P	F, G, J, K, M	M, N	S	P, R	AVX, ATC
CDR13BP162A%@#	1600	50	P	F, G, J, K, M	M, N	S	P, R	AVX, ATC
	Cap.	Rated	Temp.	Cap.	Termination	Level 1	Level 2	
Part Number	Value (pF)	Voltage (V)	Limits (*)	Tol. (+/-%)	Finish (@)	(FRL)(#)	(FRL)(#)	Manufacturer
CDR13BP182A%@#	1800	50	P	F, G, J, K, M	M, N	S	P, R	AVX, ATC
CDR13BP202A%@#	2000	50	P	F, G, J, K, M	M, N	S	P, R	AVX, ATC
CDR13BP222A%@#	2200	50	P	F, G, J, K, M	M, N	S	P, R	AVX, ATC
CDR13BP242A%@#	2400	50	P	F, G, J, K, M	M, N	S	P, R	AVX, ATC
CDR13BP272A%@#	2700	50	P	F, G, J, K, M	M, N	S	P, R	AVX, ATC
CDR13BP302A%@#	3000	50	P	F, G, J, K, M	M, N	S	P, R	AVX, ATC

CDR13BP332A%@#	3300	50	P	F, G, J, K, M	M, N	S	P, R	AVX, ATC
CDR13BP362A%@#	3600	50	P	F, G, J, K, M	M, N	S	P, R	AVX, ATC
CDR13BP392A%@#	3900	50	P	F, G, J, K, M	M, N	S	P, R	AVX, ATC
	Cap.	Rated	Temp.	Cap.	Termination	Level 1	Level 2	
Part Number	Value (pF)	Voltage (V)	Limits (*)	Tol. (+/-%)	Finish (@)	(FRL)(#)	(FRL)(#)	Manufacturer
CDR13BP432A%@#	4300	50	P	F, G, J, K, M	M, N	S	P, R	AVX, ATC
CDR13BP472A%@#	4700	50	P	F, G, J, K, M	M, N	S	P, R	AVX, ATC
CDR13BP502A%@#	5000	50	P	F, G, J, K, M	M, N	S	P, R	AVX, ATC
CDR13BP512A%@#	5100	50	P	F, G, J, K, M	M, N	S	P, R	AVX, ATC

CDR14 Ceramic Chip Capacitors

	Cap.	Rated	Temp.	Cap.	Termination	Level 1	Level 2	
Part Number	Value (pF)	Voltage (V)	Limits (*)	Tol. (+/-%)	Finish (@)	(FRL)(#)	(FRL)(#)	Manufacturer
CDR14BP0R1E%@#	0.1	500	P	B	M, N	S	P, R	AVX, ATC
CDR14B*0R2E%@#	0.2	500	P, G	B	M, N	S	P, R	AVX, ATC
CDR14B*0R3E%@#	0.3	500	P, G	B, C	M, N	S	P, R	AVX, ATC
CDR14B*0R4E%@#	0.4	500	P, G	B, C	M, N	S	P, R	AVX, ATC
CDR14B*0R5E%@#	0.5	500	P, G	B, C, D	M, N	S	P, R	AVX, ATC
CDR14B*0R6E%@#	0.6	500	P, G	B, C, D	M, N	S	P, R	AVX, ATC
CDR14B*0R7E%@#	0.7	500	P, G	B, C, D	M, N	S	P, R	AVX, ATC
CDR14B*0R8E%@#	0.8	500	P, G	B, C, D	M, N	S	P, R	AVX, ATC
CDR14B*0R9E%@#	0.9	500	P, G	B, C, D	M, N	S	P, R	AVX, ATC
CDR14B*1R0E%@#	1.0	500	P, G	B, C, D	M, N	S	P, R	AVX, ATC
	Cap.	Rated	Temp.	Cap.	Termination	Level 1	Level 2	
Part Number	Value (pF)	Voltage (V)	Limits (*)	Tol. (+/-%)	Finish (@)	(FRL)(#)	(FRL)(#)	Manufacturer
CDR14B*1R1E%@#	1.1	500	P, G	B, C, D	M, N	S	P, R	AVX, ATC
CDR14B*1R2E%@#	1.2	500	P, G	B, C, D	M, N	S	P, R	AVX, ATC
CDR14B*1R3E%@#	1.3	500	P, G	B, C, D	M, N	S	P, R	AVX, ATC
CDR14B*1R4E%@#	1.4	500	P, G	B, C, D	M, N	S	P, R	AVX, ATC
CDR14B*1R5E%@#	1.5	500	P, G	B, C, D	M, N	S	P, R	AVX, ATC
CDR14B*1R6E%@#	1.6	500	P, G	B, C, D	M, N	S	P, R	AVX, ATC
CDR14B*1R7E%@#	1.7	500	P, G	B, C, D	M, N	S	P, R	AVX, ATC
CDR14B*1R8E%@#	1.8	500	P, G	B, C, D	M, N	S	P, R	AVX, ATC
CDR14B*1R9E%@#	1.9	500	P, G	B, C, D	M, N	S	P, R	AVX, ATC
	Cap.	Rated	Temp.	Cap.	Termination	Level 1	Level 2	
Part Number	Value (pF)	Voltage (V)	Limits (*)	Tol. (+/-%)	Finish (@)	(FRL)(#)	(FRL)(#)	Manufacturer
CDR14B*2R0E%@#	2.0	500	P, G	B, C, D	M, N	S	P, R	AVX, ATC
CDR14B*2R1E%@#	2.1	500	P, G	B, C, D	M, N	S	P, R	AVX, ATC
CDR14B*2R2E%@#	2.2	500	P, G	B, C, D	M, N	S	P, R	AVX, ATC
CDR14B*2R4E%@#	2.4	500	P, G	B, C, D	M, N	S	P, R	AVX, ATC
CDR14B*2R7E%@#	2.7	500	P, G	B, C, D	M, N	S	P, R	AVX, ATC
CDR14B*3R0E%@#	3.0	500	P, G	B, C, D	M, N	S	P, R	AVX, ATC
CDR14B*3R3E%@#	3.3	500	P, G	B, C, D	M, N	S	P, R	AVX, ATC
CDR14B*3R6E%@#	3.6	500	P, G	B, C, D	M, N	S	P, R	AVX, ATC

CDR14B*3R9E%@#	3.9	500	P, G	B, C, D	M, N	S	P, R	AVX, ATC
	Cap.	Rated	Temp.	Cap.	Termination	Level 1	Level 2	
Part Number	Value (pF)	Voltage (V)	Limits (*)	Tol. (+/-%)	Finish (@)	(FRL)(#)	(FRL)(#)	Manufacturer
CDR14B*4R3E%@#	4.3	500	P, G	B, C, D	M, N	S	P, R	AVX, ATC
CDR14B*4R7E%@#	4.7	500	P, G	B, C, D	M, N	S	P, R	AVX, ATC
CDR14B*5R1E%@#	5.1	500	P, G	B, C, D	M, N	S	P, R	AVX, ATC
CDR14B*5R6E%@#	5.6	500	P, G	B, C, D	M, N	S	P, R	AVX, ATC
CDR14B*6R2E%@#	6.2	500	P, G	B, C, D	M, N	S	P, R	AVX, ATC
CDR14B*6R8E%@#	6.8	500	P, G	B, C, J, K, M	M, N	S	P, R	AVX, ATC
CDR14B*7R5E%@#	7.5	500	P, G	B, C, J, K, M	M, N	S	P, R	AVX, ATC
CDR14B*8R2E%@#	8.2	500	P, G	B, C, J, K, M	M, N	S	P, R	AVX, ATC
CDR14B*9R1E%@#	9.1	500	P, G	B, C, J, K, M	M, N	S	P, R	AVX, ATC
	Cap.	Rated	Temp.	Cap.	Termination	Level 1	Level 2	
Part Number	Value (pF)	Voltage (V)	Limits (*)	Tol. (+/-%)	Finish (@)	(FRL)(#)	(FRL)(#)	Manufacturer
CDR14B*100E%@#	10	500	P, G	B, C, J, K, M	M, N	S	P, R	AVX, ATC
CDR14B*110E%@#	11	500	P, G	B, C, J, K, M	M, N	S	P, R	AVX, ATC
CDR14B*120E%@#	12	500	P, G	B, C, J, K, M	M, N	S	P, R	AVX, ATC
CDR14B*130E%@#	13	500	P, G	B, C, J, K, M	M, N	S	P, R	AVX, ATC
CDR14B*150E%@#	15	500	P, G	B, C, J, K, M	M, N	S	P, R	AVX, ATC
CDR14B*160E%@#	16	500	P, G	B, C, J, K, M	M, N	S	P, R	AVX, ATC
CDR14B*180E%@#	18	500	P, G	B, C, J, K, M	M, N	S	P, R	AVX, ATC
CDR14B*200E%@#	20	500	P, G	B, C, J, K, M	M, N	S	P, R	AVX, ATC
CDR14B*220E%@#	22	500	P, G	B, C, J, K, M	M, N	S	P, R	AVX, ATC
	Cap.	Rated	Temp.	Cap.	Termination	Level 1	Level 2	
Part Number	Value (pF)	Voltage (V)	Limits (*)	Tol. (+/-%)	Finish (@)	(FRL)(#)	(FRL)(#)	Manufacturer
CDR14B*240E%@#	24	500	P, G	B, C, J, K, M	M, N	S	P, R	AVX, ATC
CDR14B*270E%@#	27	500	P, G	B, C, J, K, M	M, N	S	P, R	AVX, ATC
CDR14B*300E%@#	30	500	P, G	B, C, J, K, M	M, N	S	P, R	AVX, ATC
CDR14B*330E%@#	33	500	P, G	B, C, J, K, M	M, N	S	P, R	AVX, ATC
CDR14B*360E%@#	36	500	P, G	B, C, J, K, M	M, N	S	P, R	AVX, ATC
CDR14B*390E%@#	39	500	P, G	B, C, J, K, M	M, N	S	P, R	AVX, ATC
CDR14B*430E%@#	43	500	P, G	B, C, J, K, M	M, N	S	P, R	AVX, ATC
CDR14B*470E%@#	47	500	P, G	F, G, J, K, M	M, N	S	P, R	AVX, ATC
CDR14B*510E%@#	51	500	P, G	F, G, J, K, M	M, N	S	P, R	AVX, ATC
	Cap.	Rated	Temp.	Cap.	Termination	Level 1	Level 2	
Part Number	Value (pF)	Voltage (V)	Limits (*)	Tol. (+/-%)	Finish (@)	(FRL)(#)	(FRL)(#)	Manufacturer
CDR14B*560E%@#	56	500	P, G	F, G, J, K, M	M, N	S	P, R	AVX, ATC
CDR14B*620E%@#	62	500	P, G	F, G, J, K, M	M, N	S	P, R	AVX, ATC
CDR14B*680E%@#	68	500	P, G	F, G, J, K, M	M, N	S	P, R	AVX, ATC
CDR14B*750E%@#	75	500	P, G	F, G, J, K, M	M, N	S	P, R	AVX, ATC
CDR14B*820E%@#	82	500	P, G	F, G, J, K, M	M, N	S	P, R	AVX, ATC
CDR14B*910E%@#	91	500	P, G	F, G, J, K, M	M, N	S	P, R	AVX, ATC
CDR14B*101E%@#	100	500	P, G	F, G, J, K, M	M, N	S	P, R	AVX, ATC
CDR14B*111D%@#	110	300	P, G	F, G, J, K, M	M, N	S	P, R	AVX, ATC
CDR14B*121D%@#	120	300	P, G	F, G, J, K, M	M, N	S	P, R	AVX, ATC
	Cap.	Rated	Temp.	Cap.	Termination	Level 1	Level 2	
Part Number	Value (pF)	Voltage (V)	Limits (*)	Tol. (+/-%)	Finish (@)	(FRL)(#)	(FRL)(#)	Manufacturer

CDR14B*131D%@#	130	300	P, G	F, G, J, K, M	M, N	S	P, R	AVX, ATC
CDR14B*151D%@#	150	300	P, G	F, G, J, K, M	M, N	S	P, R	AVX, ATC
CDR14B*161D%@#	160	300	P, G	F, G, J, K, M	M, N	S	P, R	AVX, ATC
CDR14B*181D%@#	180	300	P, G	F, G, J, K, M	M, N	S	P, R	AVX, ATC
CDR14B*201D%@#	200	300	P, G	F, G, J, K, M	M, N	S	P, R	AVX, ATC
CDR14B*221C%@#	220	200	P, G	F, G, J, K, M	M, N	S	P, R	AVX, ATC
CDR14B*241C%@#	240	200	P, G	F, G, J, K, M	M, N	S	P, R	AVX, ATC
CDR14B*271C%@#	270	200	P, G	F, G, J, K, M	M, N	S	P, R	AVX, ATC
CDR14B*301C%@#	300	200	P, G	F, G, J, K, M	M, N	S	P, R	AVX, ATC
	Cap.	Rated	Temp.	Cap.	Termination	Level 1	Level 2	
Part Number	Value (pF)	Voltage (V)	Limits (*)	Tol. (+/-%)	Finish (@)	(FRL)(#)	(FRL)(#)	Manufacturer
CDR14B*331C%@#	330	200	P, G	F, G, J, K, M	M, N	S	P, R	AVX, ATC
CDR14B*361C%@#	360	200	P, G	F, G, J, K, M	M, N	S	P, R	AVX, ATC
CDR14B*391C%@#	390	200	P, G	F, G, J, K, M	M, N	S	P, R	AVX, ATC
CDR14B*431C%@#	430	200	P, G	F, G, J, K, M	M, N	S	P, R	AVX, ATC
CDR14B*471C%@#	470	200	P, G	F, G, J, K, M	M, N	S	P, R	AVX, ATC
CDR14B*511B%@#	510	100	P, G	F, G, J, K, M	M, N	S	P, R	AVX, ATC
CDR14B*561B%@#	560	100	P, G	F, G, J, K, M	M, N	S	P, R	AVX, ATC
CDR14B*621B%@#	620	100	P, G	F, G, J, K, M	M, N	S	P, R	AVX, ATC
CDR14B*681A%@#	680	50	P, G	F, G, J, K, M	M, N	S	P, R	AVX, ATC
	Cap.	Rated	Temp.	Cap.	Termination	Level 1	Level 2	
Part Number	Value (pF)	Voltage (V)	Limits (*)	Tol. (+/-%)	Finish (@)	(FRL)(#)	(FRL)(#)	Manufacturer
CDR14B*751A%@#	750	50	P, G	F, G, J, K, M	M, N	S	P, R	AVX, ATC
CDR14B*821A%@#	820	50	P, G	F, G, J, K, M	M, N	S	P, R	AVX, ATC
CDR14B*911A%@#	910	50	P, G	F, G, J, K, M	M, N	S	P, R	AVX, ATC
CDR14B*102A%@#	1000	50	P, G	F, G, J, K, M	M, N	S	P, R	AVX, ATC
CDR14BP112A%@#	1100	50	P, G	F, G, J, K, M	M, N	S	P, R	AVX, ATC
CDR14BP122A%@#	1200	50	P, G	F, G, J, K, M	M, N	S	P, R	AVX, ATC
CDR14BP132A%@#	1300	50	P	F, G, J, K, M	M, N	S	P, R	AVX, ATC
CDR14BP152A%@#	1500	50	P	F, G, J, K, M	M, N	S	P, R	AVX, ATC
CDR14BP162A%@#	1600	50	P	F, G, J, K, M	M, N	S	P, R	AVX, ATC
	Cap.	Rated	Temp.	Cap.	Termination	Level 1	Level 2	
Part Number	Value (pF)	Voltage (V)	Limits (*)	Tol. (+/-%)	Finish (@)	(FRL)(#)	(FRL)(#)	Manufacturer
CDR14BP182A%@#	1800	50	P	F, G, J, K, M	M, N	S	P, R	AVX, ATC
CDR14BP202A%@#	2000	50	P	F, G, J, K, M	M, N	S	P, R	AVX, ATC
CDR14BP222A%@#	2200	50	P	F, G, J, K, M	M, N	S	P, R	AVX, ATC
CDR14BP242A%@#	2400	50	P	F, G, J, K, M	M, N	S	P, R	AVX, ATC
CDR14BP272A%@#	2700	50	P	F, G, J, K, M	M, N	S	P, R	AVX, ATC
CDR14BP302A%@#	3000	50	P	F, G, J, K, M	M, N	S	P, R	AVX, ATC
CDR14BP332A%@#	3300	50	P	F, G, J, K, M	M, N	S	P, R	AVX, ATC
CDR14BP362A%@#	3600	50	P	F, G, J, K, M	M, N	S	P, R	AVX, ATC
CDR14BP392A%@#	3900	50	P	F, G, J, K, M	M, N	S	P, R	AVX, ATC
	Cap.	Rated	Temp.	Cap.	Termination	Level 1	Level 2	
Part Number	Value (pF)	Voltage (V)	Limits (*)	Tol. (+/-%)	Finish (@)	(FRL)(#)	(FRL)(#)	Manufacturer
CDR14BP432A%@#	4300	50	P	F, G, J, K, M	M, N	S	P, R	AVX, ATC
CDR14BP472A%@#	4700	50	P	F, G, J, K, M	M, N	S	P, R	AVX, ATC
CDR14BP502A%@#	5000	50	P	F, G, J, K, M	M, N	S	P, R	AVX, ATC

CDR14BP512A%@#	5100	50	P	F, G, J, K, M	M, N	S	P, R	AVX, ATC

CDR31 Ceramic Chip Capacitors

	Cap.	Rated	Cap.	Termination	Level 1	Level 2	
Part Number	Value (pF)	Voltage (V)	Tol (+/-%)	Finish (@)	(FRL)(#)	(FRL)(#)	Manufacturer
CDR31BP1R0B%@#	1.0	100	B, C	S, M, N, U	S	P, R	AVX, KEM, VIT
CDR31BP1R1B%@#	1.1	100	B, C	S, M, N, U	S	P, R	AVX, KEM, VIT
CDR31BP1R2B%@#	1.2	100	B, C	S, M, N, U	S	P, R	AVX, KEM, VIT
CDR31BP1R3B%@#	1.3	100	B, C	S, M, N, U	S	P, R	AVX, KEM, VIT
CDR31BP1R5B%@#	1.5	100	B, C	S, M, N, U	S	P, R	AVX, KEM, VIT
CDR31BP1R6B%@#	1.6	100	B, C	S, M, N, U	S	P, R	AVX, KEM, VIT
CDR31BP1R8B%@#	1.8	100	B, C	S, M, N, U	S	P, R	AVX, KEM, VIT
CDR31BP2R0B%@#	2.0	100	B, C	S, M, N, U	S	P, R	AVX, KEM, VIT
CDR31BP2R2B%@#	2.2	100	B, C	S, M, N, U	S	P, R	AVX, KEM, VIT
CDR31BP2R4B%@#	2.4	100	B, C	S, M, N, U	S	P, R	AVX, KEM, VIT
	Cap.	Rated	Cap.	Termination	Level 1	Level 2	
Part Number	Value (pF)	Voltage (V)	Tol (+/-%)	Finish (@)	(FRL)(#)	(FRL)(#)	Manufacturer
CDR31BP2R7B%@#	2.7	100	B, C, D	S, M, N, U	S	P, R	AVX, KEM, VIT
CDR31BP3R0B%@#	3.0	100	B, C, D	S, M, N, U	S	P, R	AVX, KEM, VIT
CDR31BP3R3B%@#	3.3	100	B, C, D	S, M, N, U	S	P, R	AVX, KEM, VIT
CDR31BP3R6B%@#	3.6	100	B, C, D	S, M, N, U	S	P, R	AVX, KEM, VIT
CDR31BP3R9B%@#	3.9	100	B, C, D	S, M, N, U	S	P, R	AVX, KEM, VIT
CDR31BP4R3B%@#	4.3	100	B, C, D	S, M, N, U	S	P, R	AVX, KEM, VIT
CDR31BP4R7B%@#	4.7	100	B, C, D	S, M, N, U	S	P, R	AVX, KEM, VIT
CDR31BP5R1B%@#	5.1	100	B, C, D	S, M, N, U	S	P, R	AVX, KEM, VIT
CDR31BP5R6B%@#	5.6	100	B, C, D	S, M, N, U	S	P, R	AVX, KEM, VIT
	Cap.	Rated	Cap.	Termination	Level 1	Level 2	
Part Number	Value (pF)	Voltage (V)	Tol (+/-%)	Finish (@)	(FRL)(#)	(FRL)(#)	Manufacturer
CDR31BP6R2B%@#	6.2	100	B, C, D	S, M, N, U	S	P, R	AVX, KEM VIT
CDR31BP6R8B%@#	6.8	100	B, C, D	S, M, N, U	S	P, R	AVX, KEM VIT
CDR31BP7R5B%@#	7.5	100	B, C, D	S, M, N, U	S	P, R	AVX, KEM VIT
CDR31BP8R2B%@#	8.2	100	B, C, D	S, M, N, U	S	P, R	AVX, KEM, VIT
CDR31BP9R1B%@#	9.1	100	B, C, D	S, M, N, U	S	P, R	AVX, KEM, VIT
CDR31BP100B%@#	10	100	F, J, K	S, M, N, U	S	P, R	AVX, KEM, VIT
CDR31BP110B%@#	11	100	F, J, K	S, M, N, U	S	P, R	AVX, KEM, VIT
CDR31BP120B%@#	12	100	F, J, K	S, M, N, U	S	P, R	AVX, KEM, VIT
CDR31BP130B%@#	13	100	F, J, K	S, M, N, U	S	P, R	AVX, KEM, VIT
	Cap.	Rated	Cap.	Termination	Level 1	Level 2	
Part Number	Value (pF)	Voltage (V)	Tol (+/-%)	Finish (@)	(FRL)(#)	(FRL)(#)	Manufacturer
CDR31BP150B%@#	15	100	F, J, K	S, M, N, U	S	P, R	AVX, KEM, VIT
CDR31BP160B%@#	16	100	F, J, K	S, M, N, U	S	P, R	AVX, KEM, VIT
CDR31BP180B%@#	18	100	F, J, K	S, M, N, U	S	P, R	AVX, KEM, VIT
CDR31BP200B%@#	20	100	F, J, K	S, M, N, U	S	P, R	AVX, KEM, VIT
CDR31BP220B%@#	22	100	F, J, K	S, M, N, U	S	P, R	AVX, KEM, VIT

CDR31BP240B%@#	24	100	F, J, K	S, M, N, U	S	P, R	AVX, KEM, VIT
CDR31BP270B%@#	27	100	F, J, K	S, M, N, U	S	P, R	AVX, KEM VIT
CDR31BP300B%@#	30	100	F, J, K	S, M, N, U	S	P, R	AVX, KEM VIT
CDR31BP330B%@#	33	100	F, J, K	S, M, N, U	S	P, R	AVX, KEM VIT
	Cap.	Rated	Cap.	Termination	Level 1	Level 2	
Part Number	Value (pF)	Voltage (V)	Tol (+/-%)	Finish (@)	(FRL)(#)	(FRL)(#)	Manufacturer
CDR31BP360B%@#	36	100	F, J, K	S, M, N, U	S	P, R	AVX, KEM, VIT
CDR31BP390B%@#	39	100	F, J, K	S, M, N, U	S	P, R	AVX, KEM, VIT
CDR31BP430B%@#	43	100	F, J, K	S, M, N, U	S	P, R	AVX, KEM, VIT
CDR31BP470B%@#	47	100	F, J, K	S, M, N, U	S	P, R	AVX, KEM, VIT
CDR31BP510B%@#	51	100	F, J, K	S, M, N, U	S	P, R	AVX, KEM, VIT
CDR31BP560B%@#	56	100	F, J, K	S, M, N, U	S	P, R	AVX, KEM, VIT
CDR31BP620B%@#	62	100	F, J, K	S, M, N, U	S	P, R	AVX, KEM, VIT
CDR31BP680B%@#	68	100	F, J, K	S, M, N, U	S	P, R	AVX, KEM, VIT
CDR31BP750B%@#	75	100	F, J, K	S, M, N, U	S	P, R	AVX, KEM, VIT
	Cap.	Rated	Cap.	Termination	Level 1	Level 2	
Part Number	Value (pF)	Voltage (V)	Tol (+/-%)	Finish (@)	(FRL)(#)	(FRL)(#)	Manufacturer
CDR31BP820B%@#	82	100	F, J, K	S, M, N, U	S	P, R	AVX, KEM, VIT
CDR31BP910B%@#	91	100	F, J, K	S, M, N, U	S	P, R	AVX, KEM, VIT
CDR31BP101B%@#	100	100	F, J, K	S, M, N, U	S	P, R	AVX, KEM VIT
CDR31BP111B%@#	110	100	F, J, K	S, M, N, U	S	P, R	AVX, KEM VIT
CDR31BP121B%@#	120	100	F, J, K	S, M, N, U	S	P, R	AVX, KEM, VIT
CDR31BP131B%@#	130	100	F, J, K	S, M, N, U	S	P, R	AVX, KEM, VIT
CDR31BP151B%@#	150	100	F, J, K	S, M, N, U	S	P, R	AVX, KEM, VIT
CDR31BP161B%@#	160	100	F, J, K	S, M, N, U	S	P, R	AVX, KEM, VIT
CDR31BP181B%@#	180	100	F, J, K	S, M, N, U	S	P, R	AVX, KEM, VIT
	Cap.	Rated	Cap.	Termination	Level 1	Level 2	
Part Number	Value (pF)	Voltage (V)	Tol (+/-%)	Finish (@)	(FRL)(#)	(FRL)(#)	Manufacturer
CDR31BP201B%@#	200	100	F, J, K	S, M, N, U	S	P, R	AVX, KEM, VIT
CDR31BP221B%@#	220	100	F, J, K	S, M, N, U	S	P, R	AVX, KEM, VIT
CDR31BP241B%@#	240	100	F, J, K	S, M, N, U	S	P, R	AVX, KEM, VIT
CDR31BP271B%@#	270	100	F, J, K	S, M, N, U	S	P, R	AVX, KEM, VIT
CDR31BP301B%@#	300	100	F, J, K	S, M, N, U	S	P, R	AVX, KEM, VIT
CDR31BP331B%@#	330	100	F, J, K	S, M, N, U	S	P, R	AVX, KEM, VIT
CDR31BP361B%@#	360	100	F, J, K	S, M, N, U	S	P, R	AVX, KEM, VIT
CDR31BP391B%@#	390	100	F, J, K	S, M, N, U	S	P, R	AVX, KEM, VIT
CDR31BP431B%@#	430	100	F, J, K	S, M, N, U	S	P, R	AVX, KEM, VIT
	Cap.	Rated	Cap.	Termination	Level 1	Level 2	
Part Number	Value (pF)	Voltage (V)	Tol (+/-%)	Finish (@)	(FRL)(#)	(FRL)(#)	Manufacturer
CDR31BP471B%@#	470	100	F, J, K	S, M, N, U	S	P, R	AVX, KEM, VIT
CDR31BP511A%@#	510	50	F, J, K	S, M, N, U	S	P, R	AVX, KEM, VIT
CDR31BP561A%@#	560	50	F, J, K	S, M, N, U	S	P, R	AVX, KEM, VIT
CDR31BP621A%@#	620	50	F, J, K	S, M, N, U	S	P, R	AVX, KEM, VIT
CDR31BP681A%@#	680	50	F, J, K	S, M, N, U	S	P, R	AVX, KEM, VIT
CDR31BX471B%@#	470	100	K, M	S, M, N, U	S	P, R	AVX, KEM, VIT
CDR31BX561B%@#	560	100	K, M	S, M, N, U	S	P, R	AVX, KEM, VIT
CDR31BX681B%@#	680	100	K, M	S, M, N, U	S	P, R	AVX, KEM, VIT

CDR31BX821B%@#	820	100	K, M	S, M, N, U	S	P, R	AVX, KEM, VIT
	Cap.	Rated	Cap.	Termination	Level 1	Level 2	
Part Number	Value (pF)	Voltage (V)	Tol (+/-%)	Finish (@)	(FRL)(#)	(FRL)(#)	Manufacturer
CDR31BX102B%@#	1000	100	K, M	S, M, N, U	S	P, R	AVX, KEM, VIT
CDR31BX122B%@#	1200	100	K, M	S, M, N, U	S	P, R	AVX, KEM, VIT
CDR31BX152B%@#	1500	100	K, M	S, M, N, U	S	P, R	AVX, KEM, VIT
CDR31BX182B%@#	1800	100	K, M	S, M, N, U	S	P, R	AVX, KEM, VIT
CDR31BX222B%@#	2200	100	K, M	S, M, N, U	S	P, R	AVX, KEM, VIT
CDR31BX272B%@#	2700	100	K, M	S, M, N, U	S	P, R	AVX, KEM, VIT
CDR31BX332B%@#	3300	100	K, M	S, M, N, U	S	P, R	AVX, KEM, VIT
CDR31BX392B%@#	3900	100	K, M	S, M, N, U	S	P, R	AVX, KEM, VIT
CDR31BX472B%@#	4700	100	K, M	S, M, N, U	S	P, R	AVX, KEM, VIT
	Cap.	Rated	Cap.	Termination	Level 1	Level 2	
Part Number	Value (pF)	Voltage (V)	Tol (+/-%)	Finish (@)	(FRL)(#)	(FRL)(#)	Manufacturer
CDR31BX562A%@#	5600	50	K, M	S, M, N, U	S	P, R	AVX, KEM, VIT
CDR31BX682A%@#	6800	50	K, M	S, M, N, U	S	P, R	AVX, KEM, VIT
CDR31BX822A%@#	8200	50	K, M	S, M, N, U	S	P, R	AVX, KEM, VIT
CDR31BX103A%@#	10000	50	K, M	S, M, N, U	S	P, R	AVX, KEM, VIT
CDR31BX123A%@#	12000	50	K, M	S, M, N, U	S	P, R	AVX, KEM, VIT
CDR31BX153A%@#	15000	50	K, M	S, M, N, U	S	P, R	AVX, KEM, VIT
CDR31BX183A%@#	18000	50	K, M	S, M, N, U	S	P, R	AVX, KEM, VIT

CDR32 Ceramic Chip Capacitors

	Cap.	Rated	Cap.	Termination	Level 1	Level 2	
Part Number	Value (pF)	Voltage (V)	Tol (+/-%)	Finish (@)	(FRL)(#)	(FRL)(#)	Manufacturer
CDR32BP1R0B%@#	1.0	100	B, C	S, M, N, U	S	P, R	AVX, KEM, VIT
CDR32BP1R1B%@#	1.1	100	B, C	S, M, N, U	S	P, R	AVX, KEM, VIT
CDR32BP1R2B%@#	1.2	100	B, C	S, M, N, U	S	P, R	AVX, KEM, VIT
CDR32BP1R3B%@#	1.3	100	B, C	S, M, N, U	S	P, R	AVX, KEM, VIT
CDR32BP1R5B%@#	1.5	100	B, C	S, M, N, U	S	P, R	AVX, KEM, VIT
CDR32BP1R6B%@#	1.6	100	B, C	S, M, N, U	S	P, R	AVX, KEM, VIT
CDR32BP1R8B%@#	1.8	100	B, C	S, M, N, U	S	P, R	AVX, KEM, VIT
CDR32BP2R0B%@#	2.0	100	B, C	S, M, N, U	S	P, R	AVX, KEM, VIT
CDR32BP2R2B%@#	2.2	100	B, C	S, M, N, U	S	P, R	AVX, KEM, VIT
CDR32BP2R4B%@#	2.4	100	B, C	S, M, N, U	S	P, R	AVX, KEM, VIT
	Cap.	Rated	Cap.	Termination	Level 1	Level 2	
Part Number	Value (pF)	Voltage (V)	Tol (+/-%)	Finish (@)	(FRL)(#)	(FRL)(#)	Manufacturer
CDR32BP2R7B%@#	2.7	100	B, C, D	S, M, N, U	S	P, R	AVX, KEM, VIT
CDR32BP3R0B%@#	3.0	100	B, C, D	S, M, N, U	S	P, R	AVX, KEM, VIT
CDR32BP3R3B%@#	3.3	100	B, C, D	S, M, N, U	S	P, R	AVX, KEM, VIT
CDR32BP3R6B%@#	3.6	100	B, C, D	S, M, N, U	S	P, R	AVX, KEM, VIT
CDR32BP3R9B%@#	3.9	100	B, C, D	S, M, N, U	S	P, R	AVX, KEM, VIT
CDR32BP4R3B%@#	4.3	100	B, C, D	S, M, N, U	S	P, R	AVX, KEM, VIT
CDR32BP4R7B%@#	4.7	100	B, C, D	S, M, N, U	S	P, R	AVX, KEM, VIT

CDR32BP5R1B%@#	5.1	100	B, C, D	S, M, N, U	S	P, R	AVX, KEM, VIT
CDR32BP5R6B%@#	5.6	100	B, C, D	S, M, N, U	S	P, R	AVX, KEM, VIT
	Cap.	Rated	Cap.	Termination	Level 1	Level 2	
Part Number	Value (pF)	Voltage (V)	Tol (+/-%)	Finish (@)	(FRL)(#)	(FRL)(#)	Manufacturer
CDR32BP6R2B%@#	6.2	100	B, C, D	S, M, N, U	S	P, R	AVX, KEM VIT
CDR32BP6R8B%@#	6.8	100	B, C, D	S, M, N, U	S	P, R	AVX, KEM VIT
CDR32BP7R5B%@#	7.5	100	B, C, D	S, M, N, U	S	P, R	AVX, KEM VIT
CDR32BP8R2B%@#	8.2	100	B, C, D	S, M, N, U	S	P, R	AVX, KEM, VIT
CDR32BP9R1B%@#	9.1	100	B, C, D	S, M, N, U	S	P, R	AVX, KEM, VIT
CDR32BP100B%@#	10	100	F, J, K	S, M, N, U	S	P, R	AVX, KEM, VIT
CDR32BP110B%@#	11	100	F, J, K	S, M, N, U	S	P, R	AVX, KEM, VIT
CDR32BP120B%@#	12	100	F, J, K	S, M, N, U	S	P, R	AVX, KEM, VIT
CDR32BP130B%@#	13	100	F, J, K	S, M, N, U	S	P, R	AVX, KEM, VIT
	Cap.	Rated	Cap.	Termination	Level 1	Level 2	
Part Number	Value (pF)	Voltage (V)	Tol (+/-%)	Finish (@)	(FRL)(#)	(FRL)(#)	Manufacturer
CDR32BP150B%@#	15	100	F, J, K	S, M, N, U	S	P, R	AVX, KEM, VIT
CDR32BP160B%@#	16	100	F, J, K	S, M, N, U	S	P, R	AVX, KEM, VIT
CDR32BP180B%@#	18	100	F, J, K	S, M, N, U	S	P, R	AVX, KEM, VIT
CDR32BP200B%@#	20	100	F, J, K	S, M, N, U	S	P, R	AVX, KEM, VIT
CDR32BP220B%@#	22	100	F, J, K	S, M, N, U	S	P, R	AVX, KEM, VIT
CDR32BP240B%@#	24	100	F, J, K	S, M, N, U	S	P, R	AVX, KEM, VIT
CDR32BP270B%@#	27	100	F, J, K	S, M, N, U	S	P, R	AVX, KEM VIT
CDR32BP300B%@#	30	100	F, J, K	S, M, N, U	S	P, R	AVX, KEM VIT
CDR32BP330B%@#	33	100	F, J, K	S, M, N, U	S	P, R	AVX, KEM VIT
	Cap.	Rated	Cap.	Termination	Level 1	Level 2	
Part Number	Value (pF)	Voltage (V)	Tol (+/-%)	Finish (@)	(FRL)(#)	(FRL)(#)	Manufacturer
CDR32BP360B%@#	36	100	F, J, K	S, M, N, U	S	P, R	AVX, KEM, VIT
CDR32BP390B%@#	39	100	F, J, K	S, M, N, U	S	P, R	AVX, KEM, VIT
CDR32BP430B%@#	43	100	F, J, K	S, M, N, U	S	P, R	AVX, KEM, VIT
CDR32BP470B%@#	47	100	F, J, K	S, M, N, U	S	P, R	AVX, KEM, VIT
CDR32BP510B%@#	51	100	F, J, K	S, M, N, U	S	P, R	AVX, KEM, VIT
CDR32BP560B%@#	56	100	F, J, K	S, M, N, U	S	P, R	AVX, KEM, VIT
CDR32BP620B%@#	62	100	F, J, K	S, M, N, U	S	P, R	AVX, KEM, VIT
CDR32BP680B%@#	68	100	F, J, K	S, M, N, U	S	P, R	AVX, KEM, VIT
CDR32BP750B%@#	75	100	F, J, K	S, M, N, U	S	P, R	AVX, KEM, VIT
	Cap.	Rated	Cap.	Termination	Level 1	Level 2	
Part Number	Value (pF)	Voltage (V)	Tol (+/-%)	Finish (@)	(FRL)(#)	(FRL)(#)	Manufacturer
CDR32BP820B%@#	82	100	F, J, K	S, M, N, U	S	P, R	AVX, KEM, VIT
CDR32BP910B%@#	91	100	F, J, K	S, M, N, U	S	P, R	AVX, KEM, VIT
CDR32BP101B%@#	100	100	F, J, K	S, M, N, U	S	P, R	AVX, KEM VIT
CDR32BP111B%@#	110	100	F, J, K	S, M, N, U	S	P, R	AVX, KEM VIT
CDR32BP121B%@#	120	100	F, J, K	S, M, N, U	S	P, R	AVX, KEM, VIT
CDR32BP131B%@#	130	100	F, J, K	S, M, N, U	S	P, R	AVX, KEM, VIT
CDR32BP151B%@#	150	100	F, J, K	S, M, N, U	S	P, R	AVX, KEM, VIT
CDR32BP161B%@#	160	100	F, J, K	S, M, N, U	S	P, R	AVX, KEM, VIT
CDR32BP181B%@#	180	100	F, J, K	S, M, N, U	S	P, R	AVX, KEM, VIT
	Cap.	Rated	Cap.	Termination	Level 1	Level 2	

Part Number	Value (pF)	Voltage (V)	Tol (+/-%)	Finish (@)	(FRL)(#)	(FRL)(#)	Manufacturer
CDR32BP201B%@#	200	100	F, J, K	S, M, N, U	S	P, R	AVX, KEM, VIT
CDR32BP221B%@#	220	100	F, J, K	S, M, N, U	S	P, R	AVX, KEM, VIT
CDR32BP241B%@#	240	100	F, J, K	S, M, N, U	S	P, R	AVX, KEM, VIT
CDR32BP271B%@#	270	100	F, J, K	S, M, N, U	S	P, R	AVX, KEM, VIT
CDR32BP301B%@#	300	100	F, J, K	S, M, N, U	S	P, R	AVX, KEM, VIT
CDR32BP331B%@#	330	100	F, J, K	S, M, N, U	S	P, R	AVX, KEM, VIT
CDR32BP361B%@#	360	100	F, J, K	S, M, N, U	S	P, R	AVX, KEM, VIT
CDR32BP391B%@#	390	100	F, J, K	S, M, N, U	S	P, R	AVX, KEM, VIT
CDR32BP431B%@#	430	100	F, J, K	S, M, N, U	S	P, R	AVX, KEM, VIT
	Cap.	Rated	Cap.	Termination	Level 1	Level 2	
Part Number	Value (pF)	Voltage (V)	Tol (+/-%)	Finish (@)	(FRL)(#)	(FRL)(#)	Manufacturer
CDR32BP471B%@#	470	100	F, J, K	S, M, N, U	S	P, R	AVX, KEM, VIT
CDR32BP511B%@#	510	100	F, J, K	S, M, N, U	S	P, R	AVX, KEM, VIT
CDR32BP561B%@#	560	100	F, J, K	S, M, N, U	S	P, R	AVX, KEM, VIT
CDR32BP621B%@#	620	100	F, J, K	S, M, N, U	S	P, R	AVX, KEM, VIT
CDR32BP681B%@#	680	100	F, J, K	S, M, N, U	S	P, R	AVX, KEM, VIT
CDR32BP751B%@#	750	100	F, J, K	S, M, N, U	S	P, R	AVX, KEM, VIT
CDR32BP821B%@#	820	100	F, J, K	S, M, N, U	S	P, R	AVX, KEM, VIT
CDR32BP911B%@#	910	100	F, J, K	S, M, N, U	S	P, R	AVX, KEM, VIT
CDR32BP102B%@#	1000	100	F, J, K	S, M, N, U	S	P, R	AVX, KEM, VIT
	Cap.	Rated	Cap.	Termination	Level 1	Level 2	
Part Number	Value (pF)	Voltage (V)	Tol (+/-%)	Finish (@)	(FRL)(#)	(FRL)(#)	Manufacturer
CDR32BP112A%@#	1100	50	F, J, K	S, M, N, U	S	P, R	AVX, KEM, VIT
CDR32BP122A%@#	1200	50	F, J, K	S, M, N, U	S	P, R	AVX, KEM, VIT
CDR32BP132A%@#	1300	50	F, J, K	S, M, N, U	S	P, R	AVX, KEM, VIT
CDR32BP152A%@#	1500	50	F, J, K	S, M, N, U	S	P, R	AVX, KEM, VIT
CDR32BP162A%@#	1600	50	F, J, K	S, M, N, U	S	P, R	AVX, KEM, VIT
CDR32BP182A%@#	1800	50	F, J, K	S, M, N, U	S	P, R	AVX, KEM, VIT
CDR32BP202A%@#	2000	50	F, J, K	S, M, N, U	S	P, R	AVX, KEM, VIT
CDR32BP222A%@#	2200	50	F, J, K	S, M, N, U	S	P, R	AVX, KEM, VIT
CDR32BX472B%@#	4700	100	K, M	S, M, N, U	S	P, R	AVX, KEM, VIT
	Cap.	Rated	Cap.	Termination	Level 1	Level 2	
Part Number	Value (pF)	Voltage (V)	Tol (+/-%)	Finish (@)	(FRL)(#)	(FRL)(#)	Manufacturer
CDR32BX562B%@#	5600	100	K, M	S, M, N, U	S	P, R	AVX, KEM, VIT
CDR32BX682B%@#	6800	100	K, M	S, M, N, U	S	P, R	AVX, KEM, VIT
CDR32BX822B%@#	8200	100	K, M	S, M, N, U	S	P, R	AVX, KEM, VIT
CDR32BX103B%@#	10000	100	K, M	S, M, N, U	S	P, R	AVX, KEM, VIT
CDR32BX123B%@#	12000	100	K, M	S, M, N, U	S	P, R	AVX, KEM, VIT
CDR32BX153B%@#	15000	100	K, M	S, M, N, U	S	P, R	AVX, KEM, VIT
CDR32BX183A%@#	18000	50	K, M	S, M, N, U	S	P, R	AVX, KEM, VIT
CDR32BX223A%@#	22000	50	K, M	S, M, N, U	S	P, R	AVX, KEM, VIT
CDR32BX273A%@#	27000	50	K, M	S, M, N, U	S	P, R	AVX, KEM, VIT
	Cap.	Rated	Cap.	Termination	Level 1	Level 2	
Part Number	Value (pF)	Voltage (V)	Tol (+/-%)	Finish (@)	(FRL)(#)	(FRL)(#)	Manufacturer
CDR32BX333A%@#	33000	50	K, M	S, M, N, U	S	P, R	AVX, KEM, VIT
CDR32BX393A%@#	39000	50	K, M	S, M, N, U	S	P, R	AVX, KEM, VIT

CDR33 Ceramic Chip Capacitors

	Cap.	Rated	Cap.	Termination	Level 1	Level 2	
Part Number	Value (pF)	Voltage (V)	Tol (+/-%)	Finish (@)	(FRL)(#)	(FRL)(#)	Manufacturer
CDR33BP102B%@#	1000	100	F, J, K	S, M, N, U	S	P, R	AVX, KEM, VIT
CDR33BP112B%@#	1100	100	F, J, K	S, M, N, U	S	P, R	AVX, KEM, VIT
CDR33BP122B%@#	1200	100	F, J, K	S, M, N, U	S	P, R	AVX, KEM, VIT
CDR33BP132B%@#	1300	100	F, J, K	S, M, N, U	S	P, R	AVX, KEM, VIT
CDR33BP152B%@#	1500	100	F, J, K	S, M, N, U	S	P, R	AVX, KEM, VIT
CDR33BP162B%@#	1600	100	F, J, K	S, M, N, U	S	P, R	AVX, KEM, VIT
CDR33BP182B%@#	1800	100	F, J, K	S, M, N, U	S	P, R	AVX, KEM, VIT
CDR33BP202B%@#	2000	100	F, J, K	S, M, N, U	S	P, R	AVX, KEM, VIT
CDR33BP222B%@#	2200	100	F, J, K	S, M, N, U	S	P, R	AVX, KEM, VIT
CDR33BP242A%@#	2400	50	F, J, K	S, M, N, U	S	P, R	AVX, KEM, VIT
	Cap.	Rated	Cap.	Termination	Level 1	Level 2	
Part Number	Value (pF)	Voltage (V)	Tol (+/-%)	Finish (@)	(FRL)(#)	(FRL)(#)	Manufacturer
CDR33BP272A%@#	2700	50	F, J, K	S, M, N, U	S	P, R	AVX, KEM, VIT
CDR33BP302A%@#	3000	50	F, J, K	S, M, N, U	S	P, R	AVX, KEM, VIT
CDR33BP332A%@#	3300	50	F, J, K	S, M, N, U	S	P, R	AVX, KEM, VIT
CDR33BX153B%@#	15000	100	K, M	S, M, N, U	S	P, R	AVX, KEM, VIT
CDR33BX183B%@#	18000	100	K, M	S, M, N, U	S	P, R	AVX, KEM, VIT
CDR33BX223B%@#	22000	100	K, M	S, M, N, U	S	P, R	AVX, KEM, VIT
CDR33BX273B%@#	27000	100	K, M	S, M, N, U	S	P, R	AVX, KEM, VIT
CDR33BX393A%@#	39000	50	K, M	S, M, N, U	S	P, R	AVX, KEM, VIT
CDR33BX473A%@#	47000	50	K, M	S, M, N, U	S	P, R	AVX, KEM, VIT
	Cap.	Rated	Cap.	Termination	Level 1	Level 2	
Part Number	Value (pF)	Voltage (V)	ol (+/-%)	Finish (@)	(FRL)(#)	(FRL)(#)	Manufacturer
CDR33BX563A%@#	56000	50	K, M	S, M, N, U	S	P, R	AVX, KEM VIT
CDR33BX683A%@#	68000	50	K, M	S, M, N, U	S	P, R	AVX, KEM VIT
CDR33BX823A%@#	82000	50	K, M	S, M, N, U	S	P, R	AVX, KEM VIT
CDR33BX104A%@#	100000	50	K, M	S, M, N, U	S	P, R	AVX, KEM VIT

CDR34 Ceramic Chip Capacitors

	Cap.	Rated	Cap.	Termination	Level 1	Level 2	
Part Number	Value (pF)	Voltage (V)	Tol (+/-%)	Finish (@)	(FRL)(#)	(FRL)(#)	Manufacturer
CDR34BP222B%@#	2200	100	F, J, K	S, M, N, U	S	P, R	AVX, KEM, VIT
CDR34BP242B%@#	2400	100	F, J, K	S, M, N, U	S	P, R	AVX, KEM, VIT
CDR34BP272B%@#	2700	100	F, J, K	S, M, N, U	S	P, R	AVX, KEM, VIT
CDR34BP302B%@#	3000	100	F, J, K	S, M, N, U	S	P, R	AVX, KEM, VIT
CDR34BP332B%@#	3300	100	F, J, K	S, M, N, U	S	P, R	AVX, KEM, VIT
CDR34BP362B%@#	3600	100	F, J, K	S, M, N, U	S	P, R	AVX, KEM, VIT
CDR34BP392B%@#	3900	100	F, J, K	S, M, N, U	S	P, R	AVX, KEM, VIT

CDR34BP432B%@#	4300	100	F, J, K	S, M, N, U	S	P, R	AVX, KEM, VIT
CDR34BP472B%@#	4700	100	F, J, K	S, M, N, U	S	P, R	AVX, KEM, VIT
CDR34BP512A%@#	5100	50	F, J, K	S, M, N, U	S	P, R	AVX, KEM, VIT
	Cap.	Rated	Cap.	Termination	Level 1	Level 2	
Part Number	Value (pF)	Voltage (V)	Tol (+/-%)	Finish (@)	(FRL)(#)	(FRL)(#)	Manufacturer
CDR34BP562A%@#	5600	50	F, J, K	S, M, N, U	S	P, R	AVX, KEM, VIT
CDR34BP622A%@#	6200	50	F, J, K	S, M, N, U	S	P, R	AVX, KEM, VIT
CDR34BP682A%@#	6800	50	F, J, K	S, M, N, U	S	P, R	AVX, KEM, VIT
CDR34BP752A%@#	7500	50	F, J, K	S, M, N, U	S	P, R	AVX, KEM, VIT
CDR34BP822A%@#	8200	50	F, J, K	S, M, N, U	S	P, R	AVX, KEM, VIT
CDR34BP912A%@#	9100	50	F, J, K	S, M, N, U	S	P, R	AVX, KEM, VIT
CDR34BP103A%@#	10000	50	F, J, K	S, M, N, U	S	P, R	AVX, KEM, VIT
CDR34BX273B%@#	27000	100	K, M	S, M, N, U	S	P, R	AVX, KEM, VIT
CDR34BX333B%@#	33000	100	K, M	S, M, N, U	S	P, R	AVX, KEM, VIT
	Cap.	Rated	Cap.	Termination	Level 1	Level 2	
Part Number	Value (pF)	Voltage (V)	Tol (+/-%)	Finish (@)	(FRL)(#)	(FRL)(#)	Manufacturer
CDR34BX393B%@#	39000	100	K, M	S, M, N, U	S	P, R	AVX, KEM, VIT
CDR34BX473B%@#	47000	100	K, M	S, M, N, U	S	P, R	AVX, KEM, VIT
CDR34BX563B%@#	56000	100	K, M	S, M, N, U	S	P, R	AVX, KEM, VIT
CDR34BX104A%@#	100000	50	K, M	S, M, N, U	S	P, R	AVX, KEM, VIT
CDR34BX124A%@#	120000	50	K, M	S, M, N, U	S	P, R	AVX, KEM, VIT
CDR34BX154A%@#	150000	50	K, M	S, M, N, U	S	P, R	AVX, KEM, VIT
CDR34BX184A%@#	180000	50	K, M	S, M, N, U	S	P, R	AVX, KEM, VIT

CDR35 Ceramic Chip Capacitors

	Cap.	Rated	Cap.	Termination	Level 1	Level 2	
Part Number	Value (pF)	Voltage (V)	Tol (+/-%)	Finish (@)	(FRL)(#)	(FRL)(#)	Manufacturer
CDR35BP472B%@#	4700	100	F, J, K	S, M, N, U	S	P, R	AVX, KEM, VIT
CDR35BP512B%@#	5100	100	F, J, K	S, M, N, U	S	P, R	AVX, KEM, VIT
CDR35BP562B%@#	5600	100	F, J, K	S, M, N, U	S	P, R	AVX, KEM, VIT
CDR35BP622B%@#	6200	100	F, J, K	S, M, N, U	S	P, R	AVX, KEM, VIT
CDR35BP682B%@#	6800	100	F, J, K	S, M, N, U	S	P, R	AVX, KEM, VIT
CDR35BP752B%@#	7500	100	F, J, K	S, M, N, U	S	P, R	AVX, KEM, VIT
CDR35BP822B%@#	8200	100	F, J, K	S, M, N, U	S	P, R	AVX, KEM, VIT
CDR35BP912B%@#	9100	100	F, J, K	S, M, N, U	S	P, R	AVX, KEM, VIT
CDR35BP103B%@#	10000	100	F, J, K	S, M, N, U	S	P, R	AVX, KEM, VIT
CDR35BP113A%@#	11000	50	F, J, K	S, M, N, U	S	P, R	AVX, KEM, VIT
	Cap.	Rated	Cap.	Termination	Level 1	Level 2	
Part Number	Value (pF)	Voltage (V)	Tol (+/-%)	Finish (@)	(FRL)(#)	(FRL)(#)	Manufacturer
CDR35BP123A%@#	12000	50	F, J, K	S, M, N, U	S	P, R	AVX, KEM, VIT
CDR35BP133A%@#	13000	50	F, J, K	S, M, N, U	S	P, R	AVX, KEM, VIT
CDR35BP153A%@#	15000	50	F, J, K	S, M, N, U	S	P, R	AVX, KEM, VIT
CDR35BP163A%@#	16000	50	F, J, K	S, M, N, U	S	P, R	AVX, KEM, VIT
CDR35BP183A%@#	18000	50	F, J, K	S, M, N, U	S	P, R	AVX, KEM, VIT

CDR35BP203A%@#	20000	50	F, J, K	S, M, N, U	S	P, R	AVX, KEM, VIT
CDR35BP223A%@#	22000	50	F, J, K	S, M, N, U	S	P, R	AVX, KEM, VIT
CDR35BX563B%@#	56000	100	K, M	S, M, N, U	S	P, R	AVX, KEM, VIT
CDR35BX683B%@#	68000	100	K, M	S, M, N, U	S	P, R	AVX, KEM, VIT
	Cap.	Rated	Cap.	Termination	Level 1	Level 2	
Part Number	Value (pF)	Voltage (V)	Tol (+/-%)	Finish (@)	(FRL)(#)	(FRL)(#)	Manufacturer
CDR35BX823B%@#	82000	100	K, M	S, M, N, U	S	P, R	AVX, KEM, VIT
CDR35BX104B%@#	100000	100	K, M	S, M, N, U	S	P, R	AVX, KEM, VIT
CDR35BX124B%@#	120000	100	K, M	S, M, N, U	S	P, R	AVX, KEM, VIT
CDR35BX154B%@#	150000	100	K, M	S, M, N, U	S	P, R	AVX, KEM, VIT
CDR35BX184A%@#	180000	50	K, M	S, M, N, U	S	P, R	AVX, KEM, VIT
CDR35BX224A%@#	220000	50	K, M	S, M, N, U	S	P, R	AVX, KEM, VIT
CDR35BX274A%@#	270000	50	K, M	S, M, N, U	S	P, R	AVX, KEM, VIT
CDR35BX334A%@#	330000	50	K, M	S, M, N, U	S	P, R	AVX, KEM, VIT
CDR35BX394A%@#	390000	50	K, M	S, M, N, U	S	P, R	AVX, KEM, VIT
	Cap.	Rated	Cap.	Termination	Level 1	Level 2	
Part Number	Value (pF)	Voltage (V)	Tol (+/-%)	Finish (@)	(FRL)(#)	(FRL)(#)	Manufacturer
CDR35BX474A%@#	470000	50	K, M	S, M, N, U	S	P, R	AVX, KEM, VIT

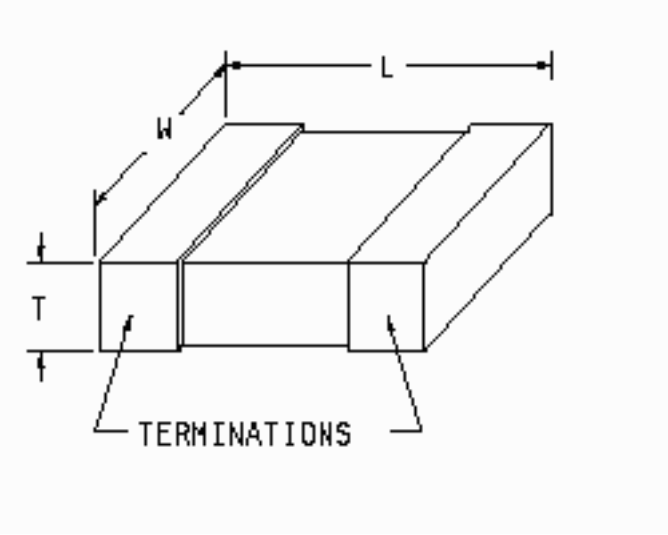

Physical Dimensions Table

Metric size chips have millimeters in parentheses.

All other sizes are in inches.

			Length (inches)			Width (inches)			Thickness (inches)
CDR	Nominal	Tol. Bare Chip	Tol. Solder Coated	Nominal	Tol. Bare Chip	Tol. Solder Coated	Minimum	Maximum	Max. Solder Coated
01	0.080	+/-0.015	+0.035, -0.015	0.050	+/-0.015	+0.030, -0.015	0.022	0.055	0.070
02	0.180	+/-0.015	+0.040, -0.015	0.050	+/-0.015	+0.030, -0.015	0.022	0.055	0.070
03	0.180	+/-0.015	+0.040, -0.015	0.080	+/-0.015	+0.030, -0.015	0.022	0.080	0.095
04	0.180	+/-0.015	+0.040, -0.015	0.125	+/-0.015	+0.030, -0.015	0.022	0.080	0.095
05	0.180	+0.020, -0.015	+0.045, -0.015	0.250	+0.020, -0.015	+0.035, -0.015	0.020	0.080	0.095
06	0.225	+/-0.020	+/-0.045	0.250	+/-0.020	+/-0.035	0.020	0.080	0.095
11	0.055	+/-0.015	N/A	0.055	+/-0.015	N/A	0.020	0.057	N/A
12	0.055	+/-0.015	N/A	0.055	+/-0.015	N/A	0.020	0.057	N/A
13	0.110	+/-0.020	N/A	0.110	+/-0.020	N/A	0.030	0.102	N/A
14	0.110	+0.035, -0.020	N/A	0.110	+/-0.020	N/A	0.030	0.102	N/A
31	0.078(2.00)	+/-0.008(0.2)	+0.031(0.8), -0.008(0.2)	0.049(1.25)	+/-0.008(0.2)	+0.020(0.5), -0.008(0.2)	N/A	0.051(1.3)	0.063(1.6)
32	0.125(3.20)	+/-0.008(0.2)	+0.031(0.8), -0.008(0.2)	0.062(1.60)	+/-0.008(0.2)	+0.020(0.5), -0.008(0.2)	N/A	0.051(1.3)	0.063(1.6)
33	0.125(3.20)	+/-0.010(0.25)	+0.033(0.85), -0.010(0.25)	0.098(2.50)	+/-0.010(0.25)	+0.022(0.55), -0.010(0.25)	N/A	0.059(1.5)	0.071(1.8)
34	0.176(4.50)	+/-0.010(0.25)	+0.033(0.85), -0.010(0.25)	0.125(3.20)	+/-0.010(0.25)	+0.022(0.55), -0.010(0.25)	N/A	0.059(1.5)	0.071(1.8)
35	0.176(4.50)	+/-0.012(0.3)	+0.035(0.9), -0.012(0.3)	0.250(6.40)	+/-0.012(0.3)	+0.024(0.6), -0.012(0.3)	N/A	0.059(1.5)	0.071(1.8)

(Summary)

Diodes

Transistors

Thermistors

Wire and Cable

Tantalum Capacitors

The following tantalum capacitor specifications are available for selection:

Military Specification	Generic Designator	Description
MIL-PRF-39003	CSR, CSS Styles	Fixed, Tantalum, (Solid) Electrolytic
MIL-PRF-39006	CLR Style	Fixed, Tantalum, (Non- Solid) Electrolytic
MIL-PRF-55365	CWR Style	Fixed, Tantalum, Chip <!-- #EndEditable -->

Parts

|

Packaging

|

Radiation

|

Publications

|

Calendar

|

Experts

Admin Login

|

Request Account

|

Feedback

|

Site Map

|

Help

|

Search

NEPP Program Manager:

Chuck Barnes, Jet Propulsion Laboratory

Responsible NASA Official:

Michael Sampson, NEPAG Manager

Website Comments:

Web Development Team

Last Modified:

August 8, 2001

AETD IT Security Banner

NASA Privacy Statement

Tantalum Capacitor Manufacturer Listing

Listed below are links to manufacturer data sites that may provide additional part related information. The linked sites are not under the control of NPSL and NASA is not responsible for information contained in the linked site. We are providing these links for your convenience only.

AVX

AVX Tantalum Corporation

69 Landry Street

Biddeford, ME 04005

CAGE Code: 17554

Tel.: (207) 282-5111

KEM

Kemet Electronics Corporation

2835 Kemet Way

Simpsonville, SC 29681

CAGE Code: 31433

Tel.: (803) 963-6300

MAL

(Vishay) Mallory

P.O. Box 489 1701 Indianapolis Road

Greencastle, IN 46153

CAGE Code: 37942

Tel.: (317) 653-3151

SPR

Vishay Sprague

P.O. Box 231 Lower Main Street

Sanford, ME 04073

CAGE Code: 2N936

Tel.: (207) 324-4140

TAN

Vishay Tansitor

P.O. Box 230 West Road

Bennington, VT 05201

CAGE Code: 05079

Tel.: (802) 442-5473

MIL-PRF-39003, CAPACITORS

Fixed, Tantalum, Electrolytic (Solid Electrolyte), Polarized, Established Reliability

CSR Styles

Part Number/Ordering Explanation

Important! Application Notes

Revision History for MIL-PRF-39003 Listing in the NPSL

Last Revision: 03/11/03

Click on the link below to see the associated parts selection listing:

Style	Detail Specification	Description
CSR13	MIL-PRF-39003/1	Axial Lead, Hermetically Sealed, Sleeved 0.0047 uF to 4.7 uF (50 V) See More...
CSR09	MIL-PRF-39003/2	Axial Lead, Hermetically Sealed, Sleeved 2.7 uF to 18 uF (6 V) 1.8 uF to 15 uF (10 V) 1.0 uF to 8.2 uF (15 V) 0.56 uF to 6.8 uF (20 V) 0.33 uF to 2.7 uF (35 V) 0.22 uF t
CSR33	MIL-PRF-39003/6	Axial, Lead, Hermetically Sealed, Sleeved 10 uF to 1000 uF (6 V) 6.8 uF to 560 uF (10 V) 4.7 uF to 330 uF (15 V) 2.7 uF to 180 uF (20 V) 1.8 uF to 68 uF (35 V) 1.2 uF to 39
CSR21	MIL-PRF-39003/9	Axial Lead, Hermetically Sealed, Sleeved 150 uF to 330 uF (6 V) 82 uF to 220 uF (10 V) 56 uF to 150 uF (15 V) 27 uF to 100 uF (20 V) 22 uF to 47 uF (35 V) 5.6 uF to 22 uF (5
CSS13	MIL-PRF-39003/10	Axial Lead, Hermetically Sealed 5.6 uF to 330 uF (6 V) 3.9 uF to 220 uF (10 V) 2.7 uF to 150 uF (15 V) 1.2 uF to 100 uF (20 V) 5.6 uF to 47 uF (35 V) 0.12 uF to 22 uF (50 V)
CSS33	MIL-PRF-39003/10	Axial Lead, Hermetically Sealed 10 uF to 1000 uF (6 V) 6.8 uF to 560 uF (10 V) 4.7 uF to 330 uF (15 V) 2.7 uF to 180 uF (20 V) 1.8 uF to 65 uF (35 V) 1.2 uF to 39 uF (50 V)

APPLICATION NOTES FOR MIL-PRF-39003

1) Solid tantalum capacitors are subject to inrush current failures. Effective series resistance for MIL-PRF-39003 capacitors should be at least 0.3 ohms/volt or 1 ohm whichever is greater, for Level 1 applications and at least 0.1 ohms/volt or 1 ohm whichever is greater, for Level 2 applications. MIL-PRF-39003 capacitors should not be used in power supply filters. MIL-PRF-39006/22 (CLR79) or MIL-PRF-39006/25 (CLR81) style parts are preferred for power supplies.

2) Parts covered by this specification contain internal soldered connections which may reflow during installation. The A, A1, B, B1 case sizes are particularly susceptible and special precautions such as heat sinking are recommended when soldering onto boards.

3) For Level 1 applications all CSR13 and CSR09 capacitors should be subjected to the surge current test as specified by MIL-PRF-39003/10 (surge current testing at -55deg.C, +25deg.C and +85deg.C). For Level 2 applications all CSR13 and CSR09 capacitors should be subjected to the surge current test as specified by MIL-PRF-39003/9 (surge current testing at +25deg.C). For Level 3 applications all CSR13 and CSR09 capacitors used in single point failure or mission critical locations should be subjected to the surge current testing as specified by MIL-PRF-39003/9 (surge current testing at +25deg.C).

4) M39003 style capacitors rated at 100 V and higher are NOT recommended for use and are therefore NOT listed within the NPSL. Historically, the NPSL has NOT listed capacitors with these ratings. In order to produce the higher voltage ratings the manufacturers use alternate process steps compared to the lower voltage styles. These alternate process steps have not been found to consistently produce reliable parts.

5) These tantalum capacitors are polar devices that are sensitive to reverse bias voltage

. Prolonged exposure to high levels of reverse voltage can produce very high leakage currents and short circuits. Short circuited tantalum capacitors can ignite and/or produce excessive heat resulting in extreme damage to circuit boards. Reverse bias application of these parts should be avoided. MIL-PRF-39003 offers no guidance on the reverse bias performance of these capacitors. Capacitor manufacturer guidelines are generally very conservative urging against any prolonged exposure to reverse bias. Some limited experimental data exists that suggests some capacitors may be able to indefinitely withstand room temperature reverse voltages on the order of 15 to 25% of rated voltage. However, all of the factors affecting the reverse bias behavior (including size and rating of the capacitor, effects of circuit current limiting and ambient temperature) have not been studied. Refer to NEPAG Lesson Learned Bulletin

NEPAG-LLB-2001-002

and NEPAG Study Report "

Reverse Bias Behavior of Surface Mount Solid Tantalum Capacitors"

for further details.

6)

Users are urged to carefully confirm the proper orientation of all tantalum capacitors after installation. The convention for polarity markings is often a source of potential confusion.

Historically, reverse polarity failures have been observed that resulted from:

Incorrect initial installation (part installed backwards)

Incorrect installation during rework (original part installed correctly, but replacement part put in backwards)

Correct circuit design, but incorrect artwork on the printed wiring board (part installed correctly according to the artwork, but actually in backwards)

Incorrect circuit design (printed wiring board artwork correct per circuit layout, but design error resulted in part in backwards)

Part marking for

MIL-PRF-39003/10 tubular case capacitors requires a stripe on the case adjacent to the

cathode ("-") termination

. This convention can be a source for confusion because the surface mount molded tantalum "chip" capacitors (CWR09 types per MIL-PRF-55365/4) frequently use a stripe on the case to identify the anode ("+") termination. Generally, the other styles of tubular case tantalum capacitors use a "+" to identify the anode terminal.

Refer to NEPAG Lesson Learned Bulletin

NEPAG-LLB-2001-002

for further details

Revision History for MIL-PRF-39003 Listing in the NPSL

03/11/03	Added application Notes 6 to warn of the potential for installing these parts backwards with emphasis on M39003/10 styles.
04/29/02	Added application Note 5 discussing the polarity sensitivity of these part types.
06/26/01	Added M39003/6 CSR33 capacitor styles. This style capacitor has been used frequently in NASA missions and was previously left off of this listing because similar Space Grade parts have been available
06/26/01	Updated available failure rate level listings to include Weibull "D" where available from existing qualified sources
06/26/01	Updated slash sheets 2, 9 and 10 to include tolerances and voltage intermediate voltage ratings not previously listed
06/26/01	Added application note to explain the reason why parts rated at 100V and above are considered reliability suspect.
01/11/99	Dimensional drawings were added
07/01/98	Correction to the CSR13 parts listing. M39003/01-7164 and M39003/01-6164 are 0.1 uF parts. Table had incorrectly listed them as 0.182 uF.
12/01/97	Made changes indicating the specification conversion to a performance specification (MIL-PRF-39003 instead of MIL-C-39003).
05/01/97	Initial Release of MIL-C-39003 Section in the NPSL

Part Number Ordering Information, example and explanation:

M39003/10-3009S where,

M39003	/10	-3009
Military Specification Number	Detail Specification Number	Four-digit dash number which uniquely identifies the capacitance, tolerance, rated dc voltage, dc leakage, dissipation factor and failure rate level

Part number ordering options are developed using the following criteria:

Style	Detail Specification Sheet	Available Tolerances		Failure Rate Levels
CSR13	MIL-PRF-39003/1	10%		B = 0.1%/1000 hours (Level 2)
CSR09	MIL-PRF-39003/2	10%, 20%		C = 0.01%/1000 hours (Level 1)
CSR21	MIL-PRF-39003/9	5%, 10%, 20%		
CSS13	MIL-PRF-39003/10	10%		
CSS33	MIL-PRF-39003/10	10%		

Part Number	Cap. Value (uF)	Rated Voltage (V)	Cap. Tol (+/- %)	Case Size	Level 1 (FRL)	Level 2 (FRL)	Manufacturer
M39003/02-2001	2.7	6	5	A1		B	KEM
M39003/02-3001	2.7	6	5	A1	C		KEM
M39003/02-4001	2.7	6	5	A1	D		KEM
M39003/02-2002	2.7	6	10	A1		B	KEM
M39003/02-3002	2.7	6	10	A1	C		KEM
M39003/02-4002	2.7	6	10	A1	D		KEM
M39003/02-2003	18	6	5	B1		B	KEM
M39003/02-3003	18	6	5	B1	C		KEM
M39003/02-4003	18	6	5	B1	D		KEM
M39003/02-2004	18	6	10	B1		B	KEM
M39003/02-3004	18	6	10	B1	C		KEM
M39003/02-4004	18	6	10	B1	D		KEM
M39003/02-2006	1.8	10	5	A1		B	KEM
M39003/02-3006	1.8	10	5	A1	C		KEM
M39003/02-4006	1.8	10	5	A1	D		KEM
M39003/02-2007	2.2	10	5	A1		B	KEM
M39003/02-3007	2.2	10	5	A1	C		KEM
M39003/02-4007	2.2	10	5	A1	D		KEM
M39003/02-2008	2.2	10	10	A1		B	KEM
M39003/02-3008	2.2	10	10	A1	C		KEM
M39003/02-4008	2.2	10	10	A1	D		KEM
M39003/02-2009	10	10	5	B1		B	KEM
M39003/02-3009	10	10	5	B1	C		KEM
M39003/02-4009	10	10	5	B1	D		KEM
M39003/02-2010	10	10	10	B1		B	KEM
M39003/02-3010	10	10	10	B1	C		KEM
M39003/02-4010	10	10	10	B1	D		KEM
M39003/02-2011	12	10	5	B1		B	KEM
M39003/02-3011	12	10	5	B1	C		KEM
M39003/02-4011	12	10	5	B1	D		KEM
M39003/02-2012	12	10	10	B1		B	KEM
M39003/02-3012	12	10	10	B1	C		KEM
M39003/02-4012	12	10	10	B1	D		KEM
M39003/02-2013	15	10	5	B1		B	KEM
M39003/02-3013	15	10	5	B1	C		KEM
M39003/02-4013	15	10	5	B1	D		KEM
M39003/02-2014	15	10	10	B1		B	KEM
M39003/02-3014	15	10	10	B1	C		KEM
M39003/02-4014	15	10	10	B1	D		KEM
M39003/02-2015	1.0	15	5	A1		B	KEM
M39003/02-3015	1.0	15	5	A1	C		KEM
M39003/02-4015	1.0	15	5	A1	D		KEM

M39003/02-2016	1.0	15	10	A1		B	KEM
M39003/02-3016	1.0	15	10	A1	C		KEM
M39003/02-4016	1.0	15	10	A1	D		KEM
M39003/02-2017	1.2	15	5	A1		B	KEM
M39003/02-3017	1.2	15	5	A1	C		KEM
M39003/02-4017	1.2	15	5	A1	D		KEM
M39003/02-2018	1.2	15	10	A1		B	KEM
M39003/02-3018	1.2	15	10	A1	C		KEM
M39003/02-4018	1.2	15	10	A1	D		KEM
M39003/02-2019	1.5	15	5	A1		B	KEM
M39003/02-3019	1.5	15	5	A1	C		KEM
M39003/02-4019	1.5	15	5	A1	D		KEM
M39003/02-2020	1.5	15	10	A1		B	KEM
M39003/02-3020	1.5	15	10	A1	C		KEM
M39003/02-4020	1.5	15	10	A1	D		KEM
M39003/02-2021	8.2	15	5	B1		B	KEM
M39003/02-3021	8.2	15	5	B1	C		KEM
M39003/02-4021	8.2	15	5	B1	D		KEM
M39003/02-2022	8.2	15	10	B1		B	KEM
M39003/02-3022	8.2	15	10	B1	C		KEM
M39003/02-4022	8.2	15	10	B1	D		KEM
M39003/02-2023	0.56	20	5	A1		B	KEM
M39003/02-3023	0.56	20	5	A1	C		KEM
M39003/02-4023	0.56	20	5	A1	D		KEM
M39003/02-2024	0.56	20	10	A1		B	KEM
M39003/02-3024	0.56	20	10	A1	C		KEM
M39003/02-4024	0.56	20	10	A1	D		KEM
M39003/02-2025	0.68	20	5	A1		B	KEM
M39003/02-3025	0.68	20	5	A1	C		KEM
M39003/02-4025	0.68	20	5	A1	D		KEM
M39003/02-2026	0.68	20	10	A1		B	KEM
M39003/02-3026	0.68	20	10	A1	C		KEM
M39003/02-4026	0.68	20	10	A1	D		KEM
M39003/02-2027	0.82	20	5	A1		B	KEM
M39003/02-3027	0.82	20	5	A1	C		KEM
M39003/02-4027	0.82	20	5	A1	D		KEM
M39003/02-2028	0.82	20	10	A1		B	KEM
M39003/02-3028	0.82	20	10	A1	C		KEM
M39003/02-4028	0.82	20	10	A1	D		KEM
M39003/02-2029	1.0	20	5	A1		B	KEM
M39003/02-3029	1.0	20	5	A1	C		KEM
M39003/02-4029	1.0	20	5	A1	D		KEM
M39003/02-2030	1.0	20	10	A1		B	KEM
M39003/02-3030	1.0	20	10	A1	C		KEM
M39003/02-4030	1.0	20	10	A1	D		KEM
M39003/02-2031	3.3	20	5	B1		B	KEM
M39003/02-3031	3.3	20	5	B1	C		KEM

M39003/02-4031	3.3	20	5	B1	D		KEM
M39003/02-2032	3.3	20	10	B1		B	KEM
M39003/02-3032	3.3	20	10	B1	C		KEM
M39003/02-4032	3.3	20	10	B1	D		KEM
M39003/02-2033	3.9	20	5	B1		B	KEM
M39003/02-3033	3.9	20	5	B1	C		KEM
M39003/02-4033	3.9	20	5	B1	D		KEM
M39003/02-2034	3.9	20	10	B1		B	KEM
M39003/02-3034	3.9	20	10	B1	C		KEM
M39003/02-4034	3.9	20	10	B1	D		KEM
M39003/02-2035	4.7	20	5	B1		B	KEM
M39003/02-3035	4.7	20	5	B1	C		KEM
M39003/02-4035	4.7	20	5	B1	D		KEM
M39003/02-2036	4.7	20	10	B1		B	KEM
M39003/02-3036	4.7	20	10	B1	C		KEM
M39003/02-4036	4.7	20	10	B1	D		KEM
M39003/02-2037	5.6	20	5	B1		B	KEM
M39003/02-3037	5.6	20	5	B1	C		KEM
M39003/02-4037	5.6	20	5	B1	D		KEM
M39003/02-2038	5.6	20	10	B1		B	KEM
M39003/02-3038	5.6	20	10	B1	C		KEM
M39003/02-4038	5.6	20	10	B1	D		KEM
M39003/02-2039	6.8	20	5	B1		B	KEM
M39003/02-3039	6.8	20	5	B1	C		KEM
M39003/02-4039	6.8	20	5	B1	D		KEM
M39003/02-2040	6.8	20	10	B1		B	KEM
M39003/02-3040	6.8	20	10	B1	C		KEM
M39003/02-4040	6.8	20	10	B1	D		KEM
M39003/02-2041	0.33	35	5	A1		B	KEM
M39003/02-3041	0.33	35	5	A1	C		KEM
M39003/02-4041	0.33	35	5	A1	D		KEM
M39003/02-2042	0.33	35	10	A1		B	KEM
M39003/02-3042	0.33	35	10	A1	C		KEM
M39003/02-4042	0.33	35	10	A1	D		KEM
M39003/02-2043	0.39	35	5	A1		B	KEM
M39003/02-3043	0.39	35	5	A1	C		KEM
M39003/02-4043	0.39	35	5	A1	D		KEM
M39003/02-2044	0.39	35	10	A1		B	KEM
M39003/02-3044	0.39	35	10	A1	C		KEM
M39003/02-4044	0.39	35	10	A1	D		KEM
M39003/02-2045	0.47	35	5	A1		B	KEM
M39003/02-3045	0.47	35	5	A1	C		KEM
M39003/02-4045	0.47	35	5	A1	D		KEM
M39003/02-2046	0.47	35	10	A1		B	KEM
M39003/02-3046	0.47	35	10	A1	C		KEM
M39003/02-4046	0.47	35	10	A1	D		KEM
M39003/02-2047	2.2	35	5	B1		B	KEM

M39003/02-3047	2.2	35	5	B1	C		KEM
M39003/02-4047	2.2	35	5	B1	D		KEM
M39003/02-2048	2.2	35	10	B1		B	KEM
M39003/02-3048	2.2	35	10	B1	C		KEM
M39003/02-4048	2.2	35	10	B1	D		KEM
M39003/02-2049	2.7	35	5	B1		B	KEM
M39003/02-3049	2.7	35	5	B1	C		KEM
M39003/02-4049	2.7	35	5	B1	D		KEM
M39003/02-2050	2.7	35	10	B1		B	KEM
M39003/02-3050	2.7	35	10	B1	C		KEM
M39003/02-4050	2.7	35	10	B1	D		KEM
M39003/02-2051	0.22	50	5	A1		B	KEM
M39003/02-3051	0.22	50	5	A1	C		KEM
M39003/02-4051	0.22	50	5	A1	D		KEM
M39003/02-2052	0.22	50	10	A1		B	KEM
M39003/02-3052	0.22	50	10	A1	C		KEM
M39003/02-4052	0.22	50	10	A1	D		KEM
M39003/02-2053	0.27	50	5	A1		B	KEM
M39003/02-3053	0.27	50	5	A1	C		KEM
M39003/02-4053	0.27	50	5	A1	D		KEM
M39003/02-2054	0.27	50	10	A1		B	KEM
M39003/02-3054	0.27	50	10	A1	C		KEM
M39003/02-4054	0.27	50	10	A1	D		KEM
M39003/02-2055	1.5	50	5	B1		B	KEM
M39003/02-3055	1.5	50	5	B1	C		KEM
M39003/02-4055	1.5	50	5	B1	D		KEM
M39003/02-2056	1.5	50	10	B1		B	KEM
M39003/02-3056	1.5	50	10	B1	C		KEM
M39003/02-4056	1.5	50	10	B1	D		KEM
M39003/02-2057	1.8	50	5	B1		B	KEM
M39003/02-3057	1.8	50	5	B1	C		KEM
M39003/02-4057	1.8	50	5	B1	D		KEM
M39003/02-2058	1.8	50	10	B1		B	KEM
M39003/02-3058	1.8	50	10	B1	C		KEM
M39003/02-4058	1.8	50	10	B1	D		KEM
M39003/02-2059	0.047	75	5	A1		B	KEM
M39003/02-3059	0.047	75	5	A1	C		KEM
M39003/02-4059	0.047	75	5	A1	D		KEM
M39003/02-2060	0.047	75	10	A1		B	KEM
M39003/02-3060	0.047	75	10	A1	C		KEM
M39003/02-4060	0.047	75	10	A1	D		KEM
M39003/02-2061	0.056	75	5	A1		B	KEM
M39003/02-3061	0.056	75	5	A1	C		KEM
M39003/02-4061	0.056	75	5	A1	D		KEM
M39003/02-2062	0.056	75	10	A1		B	KEM
M39003/02-3062	0.056	75	10	A1	C		KEM
M39003/02-4062	0.056	75	10	A1	D		KEM

M39003/02-2063	0.068	75	5	A1		B	KEM
M39003/02-3063	0.068	75	5	A1	C		KEM
M39003/02-4063	0.068	75	5	A1	D		KEM
M39003/02-2064	0.068	75	10	A1		B	KEM
M39003/02-3064	0.068	75	10	A1	C		KEM
M39003/02-4064	0.068	75	10	A1	D		KEM
M39003/02-2065	0.082	75	5	A1		B	KEM
M39003/02-3065	0.082	75	5	A1	C		KEM
M39003/02-4065	0.082	75	5	A1	D		KEM
M39003/02-2066	0.082	75	10	A1		B	KEM
M39003/02-3066	0.082	75	10	A1	C		KEM
M39003/02-4066	0.082	75	10	A1	D		KEM
M39003/02-2067	0.1	75	5	A1		B	KEM
M39003/02-3067	0.1	75	5	A1	C		KEM
M39003/02-4067	0.1	75	5	A1	D		KEM
M39003/02-2068	0.1	75	10	A1		B	KEM
M39003/02-3068	0.1	75	10	A1	C		KEM
M39003/02-4068	0.1	75	10	A1	D		KEM
M39003/02-2069	0.12	75	5	A1		B	KEM
M39003/02-3069	0.12	75	5	A1	C		KEM
M39003/02-4069	0.12	75	5	A1	D		KEM
M39003/02-2070	0.12	75	10	A1		B	KEM
M39003/02-3070	0.12	75	10	A1	C		KEM
M39003/02-4070	0.12	75	10	A1	D		KEM
M39003/02-2071	0.15	75	5	A1		B	KEM
M39003/02-3071	0.15	75	5	A1	C		KEM
M39003/02-4071	0.15	75	5	A1	D		KEM
M39003/02-2072	0.15	75	10	A1		B	KEM
M39003/02-3072	0.15	75	10	A1	C		KEM
M39003/02-4072	0.15	75	10	A1	D		KEM
M39003/02-2073	0.18	75	5	A1		B	KEM
M39003/02-3073	0.18	75	5	A1	C		KEM
M39003/02-4073	0.18	75	5	A1	D		KEM
M39003/02-2074	0.18	75	10	A1		B	KEM
M39003/02-3074	0.18	75	10	A1	C		KEM
M39003/02-4074	0.18	75	10	A1	D		KEM
M39003/02-2075	0.22	75	5	B1		B	KEM
M39003/02-3075	0.22	75	5	B1	C		KEM
M39003/02-4075	0.22	75	5	B1	D		KEM
M39003/02-2076	0.22	75	10	B1		B	KEM
M39003/02-3076	0.22	75	10	B1	C		KEM
M39003/02-4076	0.22	75	10	B1	D		KEM
M39003/02-2077	0.27	75	5	B1		B	KEM
M39003/02-3077	0.27	75	5	B1	C		KEM
M39003/02-4077	0.27	75	5	B1	D		KEM
M39003/02-2078	0.27	75	10	B1		B	KEM
M39003/02-3078	0.27	75	10	B1	C		KEM

M39003/02-4078	0.27	75	10	B1	D		KEM
M39003/02-2079	0.33	75	5	B1		B	KEM
M39003/02-3079	0.33	75	5	B1	C		KEM
M39003/02-4079	0.33	75	5	B1	D		KEM
M39003/02-2080	0.33	75	10	B1		B	KEM
M39003/02-3080	0.33	75	10	B1	C		KEM
M39003/02-4080	0.33	75	10	B1	D		KEM
M39003/02-2081	0.39	75	5	B1		B	KEM
M39003/02-3081	0.39	75	5	B1	C		KEM
M39003/02-4081	0.39	75	5	B1	D		KEM
M39003/02-2082	0.39	75	10	B1		B	KEM
M39003/02-3082	0.39	75	10	B1	C		KEM
M39003/02-4082	0.39	75	10	B1	D		KEM
M39003/02-2083	0.47	75	5	B1		B	KEM
M39003/02-3083	0.47	75	5	B1	C		KEM
M39003/02-4083	0.47	75	5	B1	D		KEM
M39003/02-2084	0.47	75	10	B1		B	KEM
M39003/02-3084	0.47	75	10	B1	C		KEM
M39003/02-4084	0.47	75	10	B1	D		KEM
M39003/02-2085	0.56	75	5	B1		B	KEM
M39003/02-3085	0.56	75	5	B1	C		KEM
M39003/02-4085	0.56	75	5	B1	D		KEM
M39003/02-2086	0.56	75	10	B1		B	KEM
M39003/02-3086	0.56	75	10	B1	C		KEM
M39003/02-4086	0.56	75	10	B1	D		KEM
M39003/02-2087	0.68	75	5	B1		B	KEM
M39003/02-3087	0.68	75	5	B1	C		KEM
M39003/02-4087	0.68	75	5	B1	D		KEM
M39003/02-2088	0.68	75	10	B1		B	KEM
M39003/02-3088	0.68	75	10	B1	C		KEM
M39003/02-4088	0.68	75	10	B1	D		KEM
M39003/02-2091	0.82	75	5	B1		B	KEM
M39003/02-3091	0.82	75	5	B1	C		KEM
M39003/02-4091	0.82	75	5	B1	D		KEM
M39003/02-2090	0.82	75	10	B1		B	KEM
M39003/02-3090	0.82	75	10	B1	C		KEM
M39003/02-4090	0.82	75	10	B1	D		KEM
M39003/02-2091	1.0	75	5	B1		B	KEM
M39003/02-3091	1.0	75	5	B1	C		KEM
M39003/02-4091	1.0	75	5	B1	D		KEM
M39003/02-2092	1.0	75	10	B1		B	KEM
M39003/02-3092	1.0	75	10	B1	C		KEM
M39003/02-4092	1.0	75	10	B1	D		KEM
M39003/02-2093	1.2	75	5	B1		B	KEM
M39003/02-3093	1.2	75	5	B1	C		KEM
M39003/02-4093	1.2	75	5	B1	D		KEM
M39003/02-2094	1.2	75	10	B1		B	KEM

M39003/02-3094	1.2	75	10	B1	C		KEM
M39003/02-4094	1.2	75	10	B1	D		KEM
	Cap.	Rated	Cap.	Case	Level 1	Level 2	
Part Number	Value (uF)	Voltage (V)	Tol (+/- %)	Size	(FRL)	(FRL)	Manufacturer

Style CSR09

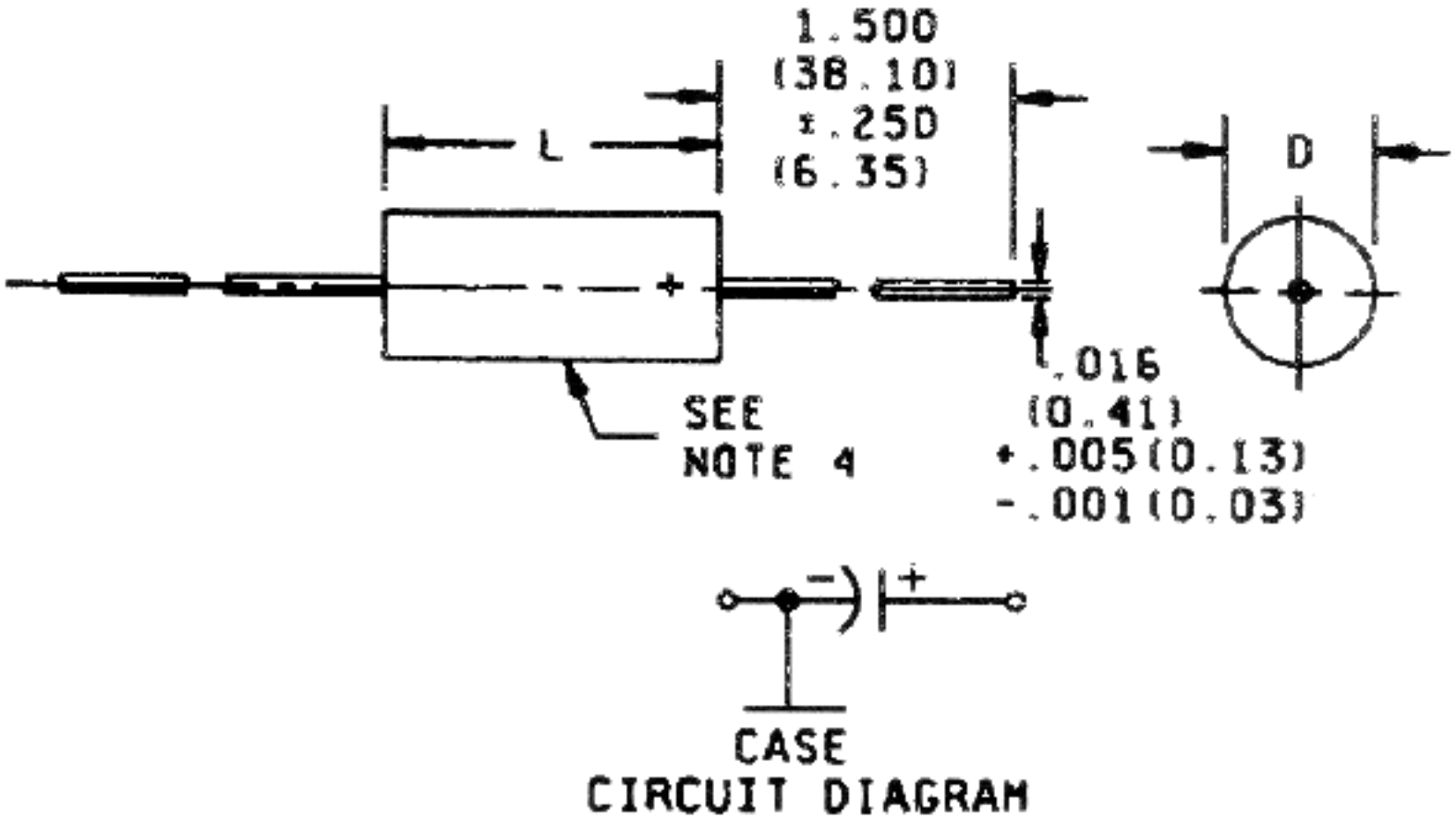

Dimensions

	L	L	L	D	D	D
Case Size	Min	Nom	Max	Min	Nom	Max
A1	0.235 (5.97)	0.250 (6.35)	0.281 (7.14)	0.081 (2.06)	0.090 (2.29)	0.099 (2.51)
B1	0.375 (9.52)	0.390 (9.91)	0.405 (10.29)	0.128 (3.25)	0.138 (3.51)	0.148 (3.76)

Notes:

1) Dimensions are in inches.

2) Metric equivalents are in parentheses and are given for general information only.

3) These capacitors are not intended to be mounted by their leads.

4) The case insulation shall extend 0.015 (0.38 mm) minimum beyond each end. However, when a shrink-fitted insulation is used, it shall lap over the ends of the capacitor body.

5) Lead length may be a minimum of 1 inch for use in tape and reel automatic insertion equipment, when specified.

CSR13 Solid Tantalum Capacitors

	Cap.	Rated	Cap.	Case	Level 1	Level 2	
Part Number	Value (uF)	Voltage (V)	Tol (+/- %)	Size	(FRL)	(FRL)	Manufacturer
M39003/01-7124	0.0047	50	10	A	C		KEM, SPR
M39003/01-6124	0.0047	50	10	A		B	KEM, SPR
M39003/01-7125	0.0047	50	20	A	C		KEM, SPR
M39003/01-6125	0.0047	50	20	A		B	KEM, SPR
M39003/01-7127	0.0056	50	10	A	C		KEM, SPR
M39003/01-6127	0.0056	50	10	A		B	KEM, SPR
M39003/01-7129	0.0068	50	10	A	C		KEM, SPR
M39003/01-6129	0.0068	50	10	A		B	KEM, SPR
M39003/01-7130	0.0068	50	20	A	C		KEM, SPR
M39003/01-6130	0.0068	50	20	A		B	KEM, SPR
M39003/01-7132	0.0082	50	10	A	C		KEM, SPR
M39003/01-6132	0.0082	50	10	A		B	KEM, SPR
M39003/01-7134	0.01	50	10	A	C		KEM, SPR
M39003/01-6134	0.01	50	10	A		B	KEM, SPR
M39003/01-7135	0.01	50	20	A	C		KEM, SPR
M39003/01-6135	0.01	50	20	A		B	KEM, SPR
M39003/01-7137	0.012	50	10	A	C		KEM, SPR
M39003/01-6137	0.012	50	10	A		B	KEM, SPR
	Cap.	Rated	Cap.	Case	Level 1	Level 2	
Part Number	Value (uF)	Voltage (V)	Tol (+/- %)	Size	(FRL)	(FRL)	Manufacturer
M39003/01-7139	0.015	50	10	A	C		KEM, SPR
M39003/01-6139	0.015	50	10	A		B	KEM, SPR
M39003/01-7140	0.015	50	20	A	C		KEM, SPR
M39003/01-6140	0.015	50	20	A		B	KEM, SPR
M39003/01-7142	0.018	50	10	A	C		KEM, SPR

M39003/01-6142	0.018	50	10	A		B	KEM, SPR
M39003/01-7144	0.022	50	10	A	C		KEM, SPR
M39003/01-6144	0.022	50	10	A		B	KEM, SPR
M39003/01-7145	0.022	50	20	A	C		KEM, SPR
M39003/01-6145	0.022	50	20	A		B	KEM, SPR
M39003/01-7147	0.027	50	10	A	C		KEM, SPR
M39003/01-6147	0.027	50	10	A		B	KEM, SPR
M39003/01-7149	0.033	50	10	A	C		KEM, SPR
M39003/01-6149	0.033	50	10	A		B	KEM, SPR
M39003/01-7150	0.033	50	20	A	C		KEM, SPR
M39003/01-6150	0.033	50	20	A		B	KEM, SPR
M39003/01-7152	0.039	50	10	A	C		KEM, SPR
M39003/01-6152	0.039	50	10	A		B	KEM, SPR
	Cap.	Rated	Cap.	Case	Level 1	Level 2	
Part Number	Value (uF)	Voltage (V)	Tol (+/- %)	Size	(FRL)	(FRL)	Manufacturer
M39003/01-7154	0.047	50	10	A	C		KEM, SPR
M39003/01-6154	0.047	50	10	A		B	KEM, SPR
M39003/01-7155	0.047	50	20	A	C		KEM, SPR
M39003/01-6155	0.047	50	20	A		B	KEM, SPR
M39003/01-7157	0.056	50	10	A	C		KEM, SPR
M39003/01-6157	0.056	50	10	A		B	KEM, SPR
M39003/01-7159	0.068	50	10	A	C		KEM, SPR
M39003/01-6159	0.068	50	10	A		B	KEM, SPR
M39003/01-7160	0.068	50	20	A	C		KEM, SPR
M39003/01-6160	0.068	50	20	A		B	KEM, SPR
M39003/01-7162	0.082	50	10	A	C		KEM, SPR
M39003/01-6162	0.082	50	10	A		B	KEM, SPR
M39003/01-7164	0.1	50	10	A	C		KEM, SPR
M39003/01-6164	0.1	50	10	A		B	KEM, SPR
M39003/01-7165	0.1	50	20	A	C		KEM, SPR
M39003/01-6165	0.1	50	20	A		B	KEM, SPR
M39003/01-7167	0.12	50	10	A	C		KEM, SPR
M39003/01-6167	0.12	50	10	A		B	KEM, SPR
	Cap.	Rated	Cap.	Case	Level 1	Level 2	
Part Number	Value (uF)	Voltage (V)	Tol (+/- %)	Size	(FRL)	(FRL)	Manufacturer
M39003/01-7169	0.15	50	10	A	C		KEM, SPR
M39003/01-6169	0.15	50	10	A		B	KEM, SPR
M39003/01-7170	0.15	50	20	A	C		KEM, SPR
M39003/01-6170	0.15	50	20	A		B	KEM, SPR
M39003/01-7172	0.18	50	10	A	C		KEM, SPR
M39003/01-6172	0.18	50	10	A		B	KEM, SPR
M39003/01-7174	0.22	50	10	A	C		KEM, SPR
M39003/01-6174	0.22	50	10	A		B	KEM, SPR
M39003/01-7175	0.22	50	20	A	C		KEM, SPR
M39003/01-6175	0.22	50	20	A		B	KEM, SPR
M39003/01-7177	0.27	50	10	A	C		KEM, SPR
M39003/01-6177	0.27	50	10	A		B	KEM, SPR

M39003/01-7179	0.33	50	10	A	C		KEM, SPR
M39003/01-6179	0.33	50	10	A		B	KEM, SPR
M39003/01-7180	0.33	50	20	A	C		KEM, SPR
M39003/01-6180	0.33	50	20	A		B	KEM, SPR
M39003/01-7182	0.39	50	10	A	C		KEM, SPR
M39003/01-6182	0.39	50	10	A		B	KEM, SPR
	Cap.	Rated	Cap.	Case	Level 1	Level 2	
Part Number	Value (uF)	Voltage (V)	Tol (+/- %)	Size	(FRL)	(FRL)	Manufacturer
M39003/01-7184	0.47	50	10	A	C		KEM, SPR
M39003/01-6184	0.47	50	10	A		B	KEM, SPR
M39003/01-7185	0.47	50	20	A	C		KEM, SPR
M39003/01-6185	0.47	50	20	A		B	KEM, SPR
M39003/01-7197	1.2	50	10	B	C		KEM, SPR
M39003/01-6197	1.2	50	10	B		B	KEM, SPR
M39003/01-7199	1.5	50	10	B	C		KEM, SPR
M39003/01-6199	1.5	50	10	B		B	KEM, SPR
M39003/01-7200	1.5	50	20	B	C		KEM, SPR
M39003/01-6200	1.5	50	20	B		B	KEM, SPR
M39003/01-7202	1.8	50	10	B	C		KEM, SPR
M39003/01-6202	1.8	50	10	B		B	KEM, SPR
M39003/01-7204	2.2	50	10	B	C		KEM, SPR
M39003/01-6204	2.2	50	10	B		B	KEM, SPR
M39003/01-7205	2.2	50	20	B	C		KEM, SPR
M39003/01-6205	2.2	50	20	B		B	KEM, SPR
M39003/01-7207	2.7	50	10	B	C		KEM, SPR
M39003/01-6207	2.7	50	10	B		B	KEM, SPR
	Cap.	Rated	Cap.	Case	Level 1	Level 2	
Part Number	Value (uF)	Voltage (V)	Tol (+/- %)	Size	(FRL)	(FRL)	Manufacturer
M39003/01-7209	3.3	50	10	B	C		KEM, SPR
M39003/01-6209	3.3	50	10	B		B	KEM, SPR
M39003/01-7210	3.3	50	20	B	C		KEM, SPR
M39003/01-6210	3.3	50	20	B		B	KEM, SPR
M39003/01-7212	3.9	50	10	B	C		KEM, SPR
M39003/01-6212	3.9	50	10	B		B	KEM, SPR
M39003/01-7214	4.7	50	10	B	C		KEM, SPR
M39003/01-6214	4.7	50	10	B		B	KEM, SPR
M39003/01-7215	4.7	50	20	B	C		KEM, SPR
M39003/01-6215	4.7	50	20	B		B	KEM, SPR
	Cap.	Rated	Cap.	Case	Level 1	Level 2	
Part Number	Value (uF)	Voltage (V)	Tol (+/- %)	Size	(FRL)	(FRL)	Manufacturer

Style CSR13

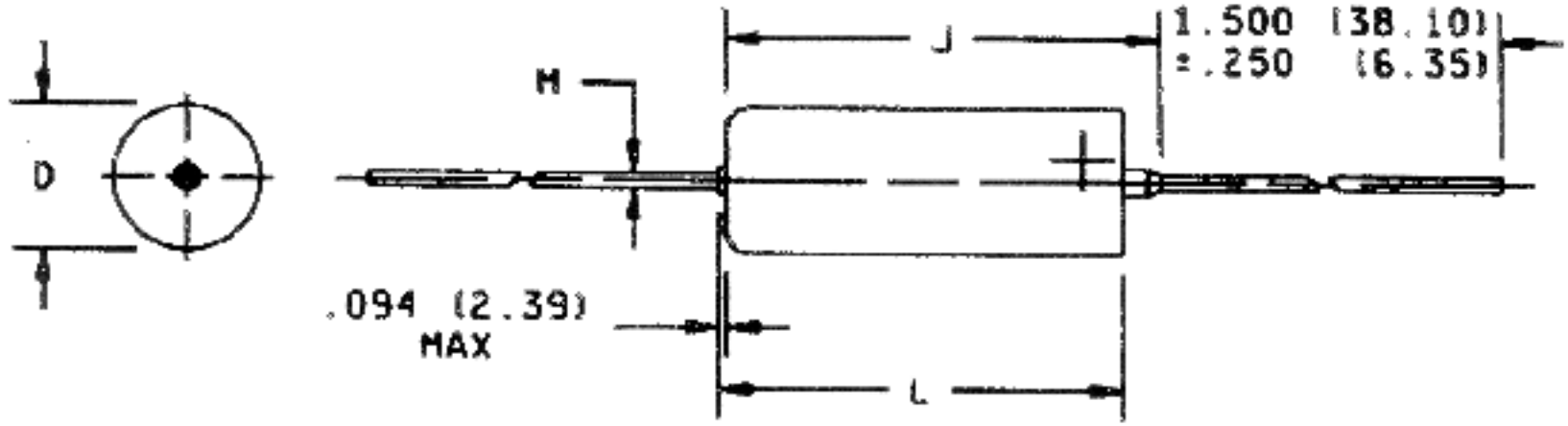

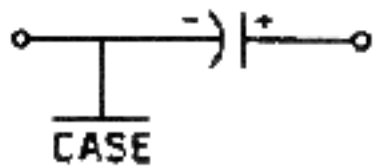

CIRCUIT DIAGRAM

Case Size	L+/-0.031 (0.79)	+0.016 (0.41) D -0.015 (0.38)	M+/-0.002 (0.05)	J Max
A	0.286 (7.26)	0.135 (3.43)	0.020 (0.51)	0.422 (10.72)
B	0.474 (12.04)	0.185 (4.70)	0.020 (0.51)	0.610 (15.49)
C	0.686 (17.42)	0.289 (7.34)	0.025 (0.64)	0.822 (20.88)
D	0.786 (19.96)	0.351 (8.92)	0.025 (0.64)	0.922 (23.42)

Notes:

1) Dimensions are in inches.

2) Metric equivalents are in parentheses and are given for general information only.

3) The case insulation shall extend 0.015 (0.38 mm) minimum beyond each end. However, when a shrink-fitted insulation is used, it shall lap over the ends of the capacitor body.

4) Lead length may be a minimum of 1 inch long for use in tape and reel automatic insertion equipment, when specified.

CSR21 Solid Tantalum Capacitors

	Cap.	Rated	Cap.	Case	Internal	Level 1	Level 2	
Part Number	Value (uF)	Voltage (V)	Tol (+/- %)	Size	Solder (*)	(FRL)	(FRL)	Manufacturer
M39003/09-2001*	150	6	5	C	Blank or H		B	KEM, SPR
M39003/09-3001*	150	6	5	C	Blank or H	C		KEM, SPR
M39003/09-4001*	150	6	5	C	Blank or H	D		KEM, SPR
M39003/09-2002*	150	6	10	C	Blank or H		B	KEM, SPR
M39003/09-3002*	150	6	10	C	Blank or H	C		KEM, SPR
M39003/09-4002*	150	6	10	C	Blank or H	D		KEM, SPR
M39003/09-2003*	150	6	20	C	Blank or H		B	KEM, SPR
M39003/09-3003*	150	6	20	C	Blank or H	C		KEM, SPR
M39003/09-4003*	150	6	20	C	Blank or H	D		KEM, SPR
M39003/09-2004*	180	6	5	C	Blank or H		B	KEM, SPR
M39003/09-3004*	180	6	5	C	Blank or H	C		KEM, SPR
M39003/09-4004*	180	6	5	C	Blank or H	D		KEM, SPR
	Cap.	Rated	Cap.	Case	Internal	Level 1	Level 2	
Part Number	Value (uF)	Voltage (V)	Tol (+/- %)	Size	Solder (*)	(FRL)	(FRL)	Manufacturer
M39003/09-2005*	180	6	10	C	Blank or H		B	KEM, SPR
M39003/09-3005*	180	6	10	C	Blank or H	C		KEM, SPR
M39003/09-4005*	180	6	10	C	Blank or H	D		KEM, SPR
M39003/09-2006*	270	6	5	D	Blank or H		B	KEM, SPR
M39003/09-3006*	270	6	5	D	Blank or H	C		KEM, SPR
M39003/09-4006*	270	6	5	D	Blank or H	D		KEM, SPR
M39003/09-2007*	270	6	10	D	Blank or H		B	KEM, SPR
M39003/09-3007*	270	6	10	D	Blank or H	C		KEM, SPR
M39003/09-4007*	270	6	10	D	Blank or H	D		KEM, SPR
M39003/09-2008*	330	6	5	D	Blank or H		B	KEM, SPR
M39003/09-3008*	330	6	5	D	Blank or H	C		KEM, SPR
M39003/09-4008*	330	6	5	D	Blank or H	D		KEM, SPR
M39003/09-2009*	330	6	10	D	Blank or H		B	KEM, SPR
	Cap.	Rated	Cap.	Case	Internal	Level 1	Level 2	
Part Number	Value (uF)	Voltage (V)	Tol (+/- %)	Size	Solder (*)	(FRL)	(FRL)	Manufacturer
M39003/09-3009*	330	6	10	D	Blank or H	C		KEM, SPR
M39003/09-4009*	330	6	10	D	Blank or H	D		KEM, SPR
M39003/09-2010*	330	6	20	D	Blank or H		B	KEM, SPR
M39003/09-3010*	330	6	20	D	Blank or H	C		KEM, SPR
M39003/09-4010*	330	6	20	D	Blank or H	D		KEM, SPR
M39003/09-2011*	82	10	5	C	Blank or H		B	KEM, SPR
M39003/09-3011*	82	10	5	C	Blank or H	C		KEM, SPR
M39003/09-4011*	82	10	5	C	Blank or H	D		KEM, SPR

M39003/09-2012*	82	10	10	C	Blank or H		B	KEM, SPR
M39003/09-3012*	82	10	10	C	Blank or H	C		KEM, SPR
M39003/09-4012*	82	10	10	C	Blank or H	D		KEM, SPR
M39003/09-2013*	100	10	5	C	Blank or H		B	KEM, SPR
M39003/09-3013*	100	10	5	C	Blank or H	C		KEM, SPR
M39003/09-4013*	100	10	5	C	Blank or H	D		KEM, SPR
	Cap.	Rated	Cap.	Case	Internal	Level 1	Level 2	
Part Number	Value (uF)	Voltage (V)	Tol (+/- %)	Size	Solder (*)	(FRL)	(FRL)	Manufacturer
M39003/09-2014*	100	10	10	C	Blank or H		B	KEM, SPR
M39003/09-3014*	100	10	10	C	Blank or H	C		KEM, SPR
M39003/09-4014*	100	10	10	C	Blank or H	D		KEM, SPR
M39003/09-2015*	100	10	20	C	Blank or H		B	KEM, SPR
M39003/09-3015*	100	10	20	C	Blank or H	C		KEM, SPR
M39003/09-4015*	100	10	20	C	Blank or H	D		KEM, SPR
M39003/09-2016*	120	10	5	C	Blank or H		B	KEM, SPR
M39003/09-3016*	120	10	5	C	Blank or H	C		KEM, SPR
M39003/09-4016*	120	10	5	C	Blank or H	D		KEM, SPR
M39003/09-2017*	120	10	10	C	Blank or H		B	KEM, SPR
M39003/09-3017*	120	10	10	C	Blank or H	C		KEM, SPR
M39003/09-4017*	120	10	10	C	Blank or H	D		KEM, SPR
M39003/09-2018*	180	10	5	D	Blank or H		B	KEM, SPR
M39003/09-3018*	180	10	5	D	Blank or H	C		KEM, SPR
M39003/09-4018*	180	10	5	D	Blank or H	D		KEM, SPR
	Cap.	Rated	Cap.	Case	Internal	Level 1	Level 2	
Part Number	Value (uF)	Voltage (V)	Tol (+/- %)	Size	Solder (*)	(FRL)	(FRL)	Manufacturer
M39003/09-2019*	180	10	10	D	Blank or H		B	KEM, SPR
M39003/09-3019*	180	10	10	D	Blank or H	C		KEM, SPR
M39003/09-4019*	180	10	10	D	Blank or H	D		KEM, SPR
M39003/09-2020*	220	10	5	D	Blank or H		B	KEM, SPR
M39003/09-3020*	220	10	5	D	Blank or H	C		KEM, SPR
M39003/09-4020*	220	10	5	D	Blank or H	D		KEM, SPR
M39003/09-2021*	220	10	10	D	Blank or H		B	KEM, SPR
M39003/09-3021*	220	10	10	D	Blank or H	C		KEM, SPR
M39003/09-4021*	220	10	10	D	Blank or H	D		KEM, SPR
M39003/09-2022*	220	10	20	D	Blank or H		B	KEM, SPR
M39003/09-3022*	220	10	20	D	Blank or H	C		KEM, SPR
M39003/09-4022*	220	10	20	D	Blank or H	D		KEM, SPR
	Cap.	Rated	Cap.	Case	Internal	Level 1	Level 2	
Part Number	Value (uF)	Voltage (V)	Tol (+/- %)	Size	Solder (*)	(FRL)	(FRL)	Manufacturer
M39003/09-2023*	56	15	5	C	Blank or H		B	KEM, SPR
M39003/09-3023*	56	15	5	C	Blank or H	C		KEM, SPR
M39003/09-4023*	56	15	5	C	Blank or H	D		KEM, SPR
M39003/09-2024*	56	15	10	C	Blank or H		B	KEM, SPR
M39003/09-3024*	56	15	10	C	Blank or H	C		KEM, SPR
M39003/09-4024*	56	15	10	C	Blank or H	D		KEM, SPR
M39003/09-2025*	68	15	5	C	Blank or H		B	KEM, SPR
M39003/09-3025*	68	15	5	C	Blank or H	C		KEM, SPR

M39003/09-4025*	68	15	5	C	Blank or H	D		KEM, SPR
M39003/09-2026*	68	15	10	C	Blank or H		B	KEM, SPR
M39003/09-3026*	68	15	10	C	Blank or H	C		KEM, SPR
M39003/09-4026*	68	15	10	C	Blank or H	D		KEM, SPR
M39003/09-2027*	68	15	20	C	Blank or H		B	KEM, SPR
M39003/09-3027*	68	15	20	C	Blank or H	C		KEM, SPR
M39003/09-4027*	68	15	20	C	Blank or H	D		KEM, SPR
	Cap.	Rated	Cap.	Case	Internal	Level 1	Level 2	
Part Number	Value (uF)	Voltage (V)	Tol (+/- %)	Size	Solder (*)	(FRL)	(FRL)	Manufacturer
M39003/09-2028*	120	15	5	D	Blank or H		B	KEM, SPR
M39003/09-3028*	120	15	5	D	Blank or H	C		KEM, SPR
M39003/09-4028*	120	15	5	D	Blank or H	D		KEM, SPR
M39003/09-2029*	120	15	10	D	Blank or H		B	KEM, SPR
M39003/09-3029*	120	15	10	D	Blank or H	C		KEM, SPR
M39003/09-4029*	120	15	10	D	Blank or H	D		KEM, SPR
M39003/09-2030*	150	15	5	D	Blank or H		B	KEM, SPR
M39003/09-3030*	150	15	5	D	Blank or H	C		KEM, SPR
M39003/09-4030*	150	15	5	D	Blank or H	D		KEM, SPR
M39003/09-2031*	150	15	10	D	Blank or H		B	KEM, SPR
M39003/09-3031*	150	15	10	D	Blank or H	C		KEM, SPR
M39003/09-4031*	150	15	10	D	Blank or H	D		KEM, SPR
	Cap.	Rated	Cap.	Case	Internal	Level 1	Level 2	
Part Number	Value (uF)	Voltage (V)	Tol (+/- %)	Size	Solder (*)	(FRL)	(FRL)	Manufacturer
M39003/09-2032*	150	15	20	D	Blank or H		B	KEM, SPR
M39003/09-3032*	150	15	20	D	Blank or H	C		KEM, SPR
M39003/09-4032*	150	15	20	D	Blank or H	D		KEM, SPR
M39003/09-2033*	27	20	5	C	Blank or H		B	KEM, SPR
M39003/09-3033*	27	20	5	C	Blank or H	C		KEM, SPR
M39003/09-4033*	27	20	5	C	Blank or H	D		KEM, SPR
M39003/09-2034*	27	20	10	C	Blank or H		B	KEM, SPR
M39003/09-3034*	27	20	10	C	Blank or H	C		KEM, SPR
M39003/09-4034*	27	20	10	C	Blank or H	D		KEM, SPR
M39003/09-2035*	33	20	5	C	Blank or H		B	KEM, SPR
M39003/09-3035*	33	20	5	C	Blank or H	C		KEM, SPR
M39003/09-4035*	33	20	5	C	Blank or H	D		KEM, SPR
M39003/09-2036*	33	20	10	C	Blank or H		B	KEM, SPR
M39003/09-3036*	33	20	10	C	Blank or H	C		KEM, SPR
M39003/09-4036*	33	20	10	C	Blank or H	D		KEM, SPR
	Cap.	Rated	Cap.	Case	Internal	Level 1	Level 2	
Part Number	Value (uF)	Voltage (V)	Tol (+/- %)	Size	Solder (*)	(FRL)	(FRL)	Manufacturer
M39003/09-2037*	33	20	20	C	Blank or H		B	KEM, SPR
M39003/09-3037*	33	20	20	C	Blank or H	C		KEM, SPR
M39003/09-4037*	33	20	20	C	Blank or H	D		KEM, SPR
M39003/09-2038*	39	20	5	C	Blank or H		B	KEM, SPR
M39003/09-3038*	39	20	5	C	Blank or H	C		KEM, SPR
M39003/09-4038*	39	20	5	C	Blank or H	D		KEM, SPR
M39003/09-2039*	39	20	10	C	Blank or H		B	KEM, SPR

M39003/09-3039*	39	20	10	C	Blank or H	C		KEM, SPR
M39003/09-4039*	39	20	10	C	Blank or H	D		KEM, SPR
M39003/09-2040*	47	20	5	C	Blank or H		B	KEM, SPR
M39003/09-3040*	47	20	5	C	Blank or H	C		KEM, SPR
M39003/09-4040*	47	20	5	C	Blank or H	D		KEM, SPR
	Cap.	Rated	Cap.	Case	Internal	Level 1	Level 2	
Part Number	Value (uF)	Voltage (V)	Tol (+/- %)	Size	Solder (*)	(FRL)	(FRL)	Manufacturer
M39003/09-2041*	47	20	10	C	Blank or H		B	KEM, SPR
M39003/09-3041*	47	20	10	C	Blank or H	C		KEM, SPR
M39003/09-4041*	47	20	10	C	Blank or H	D		KEM, SPR
M39003/09-2042*	47	20	20	C	Blank or H		B	KEM, SPR
M39003/09-3042*	47	20	20	C	Blank or H	C		KEM, SPR
M39003/09-4042*	47	20	20	C	Blank or H	D		KEM, SPR
M39003/09-2043*	56	20	5	D	Blank or H		B	KEM, SPR
M39003/09-3043*	56	20	5	D	Blank or H	C		KEM, SPR
M39003/09-4043*	56	20	5	D	Blank or H	D		KEM, SPR
M39003/09-2044*	56	20	10	D	Blank or H		B	KEM, SPR
M39003/09-3044*	56	20	10	D	Blank or H	C		KEM, SPR
M39003/09-4044*	56	20	10	D	Blank or H	D		KEM, SPR
	Cap.	Rated	Cap.	Case	Internal	Level 1	Level 2	
Part Number	Value (uF)	Voltage (V)	Tol (+/- %)	Size	Solder (*)	(FRL)	(FRL)	Manufacturer
M39003/09-2045*	68	20	5	D	Blank or H		B	KEM, SPR
M39003/09-3045*	68	20	5	D	Blank or H	C		KEM, SPR
M39003/09-4045*	68	20	5	D	Blank or H	D		KEM, SPR
M39003/09-2046*	68	20	10	D	Blank or H		B	KEM, SPR
M39003/09-3046*	68	20	10	D	Blank or H	C		KEM, SPR
M39003/09-4046*	68	20	10	D	Blank or H	D		KEM, SPR
M39003/09-2047*	68	20	20	D	Blank or H		B	KEM, SPR
M39003/09-3047*	68	20	20	D	Blank or H	C		KEM, SPR
M39003/09-4047*	68	20	20	D	Blank or H	D		KEM, SPR
M39003/09-2048*	82	20	5	D	Blank or H		B	KEM, SPR
M39003/09-3048*	82	20	5	D	Blank or H	C		KEM, SPR
M39003/09-4048*	82	20	5	D	Blank or H	D		KEM, SPR
M39003/09-2049*	82	20	10	D	Blank or H		B	KEM, SPR
M39003/09-3049*	82	20	10	D	Blank or H	C		KEM, SPR
M39003/09-4049*	82	20	10	D	Blank or H	D		KEM, SPR
	Cap.	Rated	Cap.	Case	Internal	Level 1	Level 2	
Part Number	Value (uF)	Voltage (V)	Tol (+/- %)	Size	Solder (*)	(FRL)	(FRL)	Manufacturer
M39003/09-2050*	100	20	5	D	Blank or H		B	KEM, SPR
M39003/09-3050*	100	20	5	D	Blank or H	C		KEM, SPR
M39003/09-4050*	100	20	5	D	Blank or H	D		KEM, SPR
M39003/09-2051*	100	20	10	D	Blank or H		B	KEM, SPR
M39003/09-3051*	100	20	10	D	Blank or H	C		KEM, SPR
M39003/09-4051*	100	20	10	D	Blank or H	D		KEM, SPR
M39003/09-2052*	100	20	20	D	Blank or H		B	KEM, SPR
M39003/09-3052*	100	20	20	D	Blank or H	C		KEM, SPR
M39003/09-4052*	100	20	20	D	Blank or H	D		KEM, SPR

M39003/09-2053*	22	35	5	C	Blank or H		B	KEM, SPR
M39003/09-3053*	22	35	5	C	Blank or H	C		KEM, SPR
M39003/09-4053*	22	35	5	C	Blank or H	D		KEM, SPR
	Cap.	Rated	Cap.	Case	Internal	Level 1	Level 2	
Part Number	Value (uF)	Voltage (V)	Tol (+/- %)	Size	Solder (*)	(FRL)	(FRL)	Manufacturer
M39003/09-2054*	22	35	10	C	Blank or H		B	KEM, SPR
M39003/09-3054*	22	35	10	C	Blank or H	C		KEM, SPR
M39003/09-4054*	22	35	10	C	Blank or H	D		KEM, SPR
M39003/09-2055*	22	35	20	C	Blank or H		B	KEM, SPR
M39003/09-3055*	22	35	20	C	Blank or H	C		KEM, SPR
M39003/09-4055*	22	35	20	C	Blank or H	D		KEM, SPR
M39003/09-2056*	27	35	5	D	Blank or H		B	KEM, SPR
M39003/09-3056*	27	35	5	D	Blank or H	C		KEM, SPR
M39003/09-4056*	27	35	5	D	Blank or H	D		KEM, SPR
M39003/09-2057*	27	35	10	D	Blank or H		B	KEM, SPR
M39003/09-3057*	27	35	10	D	Blank or H	C		KEM, SPR
M39003/09-4057*	27	35	10	D	Blank or H	D		KEM, SPR
M39003/09-2058*	33	35	5	D	Blank or H		B	KEM, SPR
M39003/09-3058*	33	35	5	D	Blank or H	C		KEM, SPR
M39003/09-4058*	33	35	5	D	Blank or H	D		KEM, SPR
	Cap.	Rated	Cap.	Case	Internal	Level 1	Level 2	
Part Number	Value (uF)	Voltage (V)	Tol (+/- %)	Size	Solder (*)	(FRL)	(FRL)	Manufacturer
M39003/09-2059*	33	35	10	D	Blank or H		B	KEM, SPR
M39003/09-3059*	33	35	10	D	Blank or H	C		KEM, SPR
M39003/09-4059*	33	35	10	D	Blank or H	D		KEM, SPR
M39003/09-2060*	33	35	20	D	Blank or H		B	KEM, SPR
M39003/09-3060*	33	35	20	D	Blank or H	C		KEM, SPR
M39003/09-4060*	33	35	20	D	Blank or H	D		KEM, SPR
M39003/09-2061*	39	35	5	D	Blank or H		B	KEM, SPR
M39003/09-3061*	39	35	5	D	Blank or H	C		KEM, SPR
M39003/09-4061*	39	35	5	D	Blank or H	D		KEM, SPR
M39003/09-2062*	39	35	10	D	Blank or H		B	KEM, SPR
M39003/09-3062*	39	35	10	D	Blank or H	C		KEM, SPR
M39003/09-4062*	39	35	10	D	Blank or H	D		KEM, SPR
	Cap.	Rated	Cap.	Case	Internal	Level 1	Level 2	
Part Number	Value (uF)	Voltage (V)	Tol (+/- %)	Size	Solder (*)	(FRL)	(FRL)	Manufacturer
M39003/09-2063*	47	35	5	D	Blank or H		B	KEM, SPR
M39003/09-3063*	47	35	5	D	Blank or H	C		KEM, SPR
M39003/09-4063*	47	35	5	D	Blank or H	D		KEM, SPR
M39003/09-2064*	47	35	10	D	Blank or H		B	KEM, SPR
M39003/09-3064*	47	35	10	D	Blank or H	C		KEM, SPR
M39003/09-4064*	47	35	10	D	Blank or H	D		KEM, SPR
M39003/09-2065*	47	35	20	D	Blank or H		B	KEM, SPR
M39003/09-3065*	47	35	20	D	Blank or H	C		KEM, SPR
M39003/09-4065*	47	35	20	D	Blank or H	D		KEM, SPR
M39003/09-2066*	5.6	50	5	C	Blank or H		B	KEM, SPR
M39003/09-3066*	5.6	50	5	C	Blank or H	C		KEM, SPR

M39003/09-4066*	5.6	50	5	C	Blank or H	D		KEM, SPR
M39003/09-2067*	5.6	50	10	C	Blank or H		B	KEM, SPR
M39003/09-3067*	5.6	50	10	C	Blank or H	C		KEM, SPR
M39003/09-4067*	5.6	50	10	C	Blank or H	D		KEM, SPR
	Cap.	Rated	Cap.	Case	Internal	Level 1	Level 2	
Part Number	Value (uF)	Voltage (V)	Tol (+/- %)	Size	Solder (*)	(FRL)	(FRL)	Manufacturer
M39003/09-2068*	6.8	50	5	C	Blank or H		B	KEM, SPR
M39003/09-3068*	6.8	50	5	C	Blank or H	C		KEM, SPR
M39003/09-4068*	6.8	50	5	C	Blank or H	D		KEM, SPR
M39003/09-2069*	6.8	50	10	C	Blank or H		B	KEM, SPR
M39003/09-3069*	6.8	50	10	C	Blank or H	C		KEM, SPR
M39003/09-4069*	6.8	50	10	C	Blank or H	D		KEM, SPR
M39003/09-2070*	6.8	50	20	C	Blank or H		B	KEM, SPR
M39003/09-3070*	6.8	50	20	C	Blank or H	C		KEM, SPR
M39003/09-4070*	6.8	50	20	C	Blank or H	D		KEM, SPR
M39003/09-2071*	8.2	50	5	C	Blank or H		B	KEM, SPR
M39003/09-3071*	8.2	50	5	C	Blank or H	C		KEM, SPR
M39003/09-4071*	8.2	50	5	C	Blank or H	D		KEM, SPR
	Cap.	Rated	Cap.	Case	Internal	Level 1	Level 2	
Part Number	Value (uF)	Voltage (V)	Tol (+/- %)	Size	Solder (*)	(FRL)	(FRL)	Manufacturer
M39003/09-2072*	8.2	50	10	C	Blank or H		B	KEM, SPR
M39003/09-3072*	8.2	50	10	C	Blank or H	C		KEM, SPR
M39003/09-4072*	8.2	50	10	C	Blank or H	D		KEM, SPR
M39003/09-2073*	10	50	5	C	Blank or H		B	KEM, SPR
M39003/09-3073*	10	50	5	C	Blank or H	C		KEM, SPR
M39003/09-4073*	10	50	5	C	Blank or H	D		KEM, SPR
M39003/09-2074*	10	50	10	C	Blank or H		B	KEM, SPR
M39003/09-3074*	10	50	10	C	Blank or H	C		KEM, SPR
M39003/09-4074*	10	50	10	C	Blank or H	D		KEM, SPR
M39003/09-2075*	10	50	20	C	Blank or H		B	KEM, SPR
M39003/09-3075*	10	50	20	C	Blank or H	C		KEM, SPR
M39003/09-4075*	10	50	20	C	Blank or H	D		KEM, SPR
M39003/09-2076*	12	50	5	C	Blank or H		B	KEM, SPR
M39003/09-3076*	12	50	5	C	Blank or H	C		KEM, SPR
M39003/09-4076*	12	50	5	C	Blank or H	D		KEM, SPR
	Cap.	Rated	Cap.	Case	Internal	Level 1	Level 2	
Part Number	Value (uF)	Voltage (V)	Tol (+/- %)	Size	Solder (*)	(FRL)	(FRL)	Manufacturer
M39003/09-2077*	12	50	10	C	Blank or H		B	KEM, SPR
M39003/09-3077*	12	50	10	C	Blank or H	C		KEM, SPR
M39003/09-4077*	12	50	10	C	Blank or H	D		KEM, SPR
M39003/09-2078*	15	50	5	C	Blank or H		B	KEM, SPR
M39003/09-3078*	15	50	5	C	Blank or H	C		KEM, SPR
M39003/09-4078*	15	50	5	C	Blank or H	D		KEM, SPR
M39003/09-2079*	15	50	10	C	Blank or H		B	KEM, SPR
M39003/09-3079*	15	50	10	C	Blank or H	C		KEM, SPR
M39003/09-4079*	15	50	10	C	Blank or H	D		KEM, SPR
M39003/09-2080*	15	50	20	C	Blank or H		B	KEM, SPR

M39003/09-3080*	15	50	20	C	Blank or H	C		KEM, SPR
M39003/09-4080*	15	50	20	C	Blank or H	D		KEM, SPR
	Cap.	Rated	Cap.	Case	Internal	Level 1	Level 2	
Part Number	Value (uF)	Voltage (V)	Tol (+/- %)	Size	Solder (*)	(FRL)	(FRL)	Manufacturer
M39003/09-2081*	18	50	5	C	Blank or H		B	KEM, SPR
M39003/09-3081*	18	50	5	C	Blank or H	C		KEM, SPR
M39003/09-4081*	18	50	5	C	Blank or H	D		KEM, SPR
M39003/09-2082*	18	50	10	C	Blank or H		B	KEM, SPR
M39003/09-3082*	18	50	10	C	Blank or H	C		KEM, SPR
M39003/09-4082*	18	50	10	C	Blank or H	D		KEM, SPR
M39003/09-2083*	22	50	5	D	Blank or H		B	KEM, SPR
M39003/09-3083*	22	50	5	D	Blank or H	C		KEM, SPR
M39003/09-4083*	22	50	5	D	Blank or H	D		KEM, SPR
M39003/09-2084*	22	50	10	D	Blank or H		B	KEM, SPR
M39003/09-3084*	22	50	10	D	Blank or H	C		KEM, SPR
M39003/09-4084*	22	50	10	D	Blank or H	D		KEM, SPR
M39003/09-2085*	22	50	20	D	Blank or H		B	KEM, SPR
M39003/09-3085*	22	50	20	D	Blank or H	C		KEM, SPR
M39003/09-4085*	22	50	20	D	Blank or H	D		KEM, SPR
	Cap.	Rated	Cap.	Case	Internal	Level 1	Level 2	
Part Number	Value (uF)	Voltage (V)	Tol (+/- %)	Size	Solder (*)	(FRL)	(FRL)	Manufacturer

Style CSR21

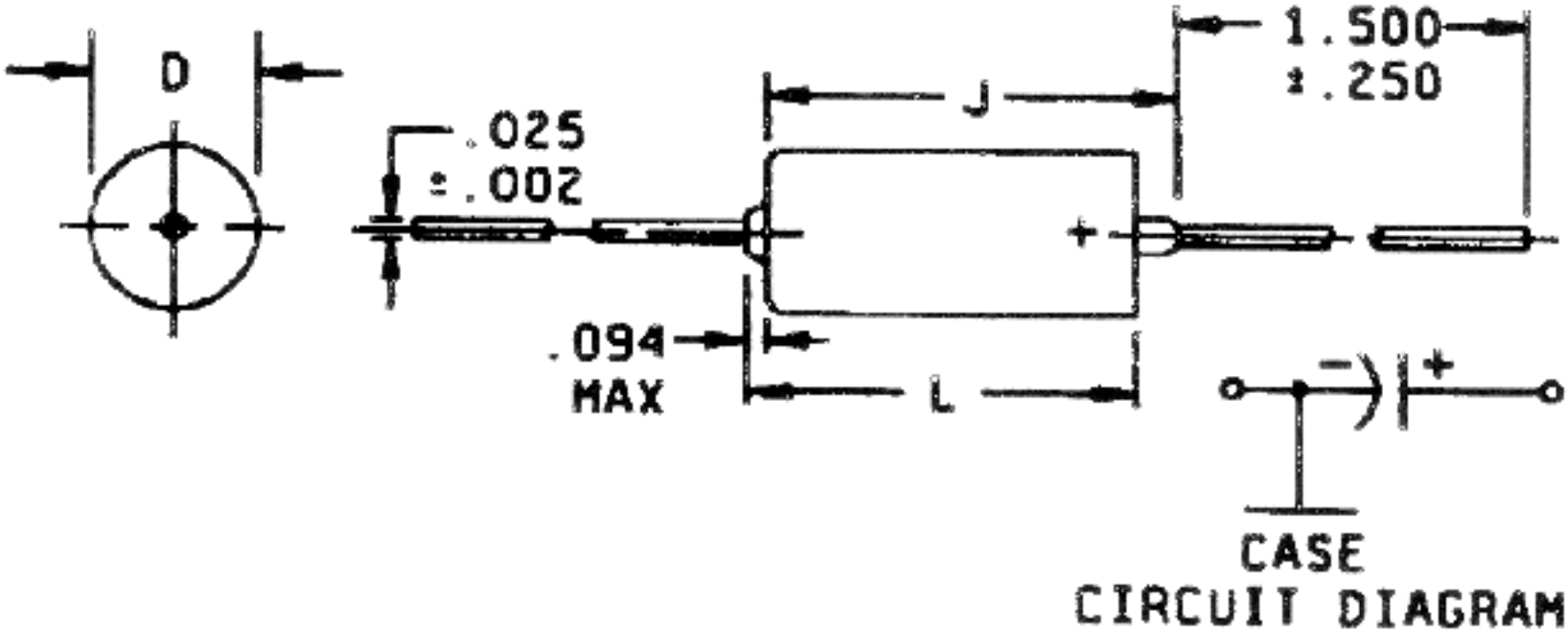

Dimensions

Case Size	L +/- 0.031 (0.79)	D + 0.016 (0.41) - 0.015 (0.38)	J max
C	0.686 (17.42)	0.289 (7.34)	0.822 (20.88)
D	0.786 (19.96)	0.351 (8.92)	0.922 (23.42)

Notes:

1) Dimensions are in inches.

2) Metric equivalents are in parentheses and are given for general information only.

3) The case insulation shall extend 0.015 (0.38 mm) minimum beyond each end. However, when a shrink-fitted insulation is used, it shall lap over the ends of the capacitor body.

4) Lead length may be a minimum of 1-inch long for use in tape and reel automatic insertion equipment, when specified.

5) Insulation thickness is included in dimension D.

Part Number	Cap. Value (uF)	Rated Voltage (V)	Cap. Tol (+/- %)	Case Size	Level 1 (FRL)	Level 2 (FRL)	Manufacturer
M39003/06-2001	10	6	10	A		B	KEM, SPR
M39003/06-3001	10	6	10	A	C		KEM, SPR
M39003/06-4001	10	6	10	A	D		KEM, SPR
M39003/06-2002	10	6	20	A		B	KEM, SPR
M39003/06-3002	10	6	20	A	C		KEM, SPR
M39003/06-4002	10	6	20	A	D		KEM, SPR
M39003/06-2003	12	6	10	A		B	KEM, SPR
M39003/06-3003	12	6	10	A	C		KEM, SPR
M39003/06-4003	12	6	10	A	D		KEM, SPR
M39003/06-2004	100	6	10	B		B	KEM, SPR
M39003/06-3004	100	6	10	B	C		KEM, SPR
M39003/06-4004	100	6	10	B	D		KEM, SPR
M39003/06-2005	100	6	20	B		B	KEM, SPR
M39003/06-3005	100	6	20	B	C		KEM, SPR
M39003/06-4005	100	6	20	B	D		KEM, SPR
M39003/06-2006	330	6	10	C		B	KEM, SPR
M39003/06-3006	330	6	10	C	C		KEM, SPR
M39003/06-4006	330	6	10	C	D		KEM, SPR
M39003/06-2007	330	6	20	C		B	KEM, SPR
M39003/06-3007	330	6	20	C	C		KEM, SPR
M39003/06-4007	330	6	20	C	D		KEM, SPR
M39003/06-2008	390	6	10	C		B	KEM, SPR
M39003/06-3008	390	6	10	C	C		KEM, SPR
M39003/06-4008	390	6	10	C	D		KEM, SPR
M39003/06-2009	470	6	10	C		B	KEM, SPR
M39003/06-3009	470	6	10	C	C		KEM, SPR
M39003/06-4009	470	6	10	C	D		KEM, SPR
M39003/06-2010	470	6	20	C		B	KEM, SPR
M39003/06-3010	470	6	20	C	C		KEM, SPR
M39003/06-4010	470	6	20	C	D		KEM, SPR
M39003/06-2011	680	6	10	D		B	KEM, SPR
M39003/06-3011	680	6	10	D	C		KEM, SPR
M39003/06-4011	680	6	10	D	D		KEM, SPR
M39003/06-2012	680	6	20	D		B	KEM, SPR
M39003/06-3012	680	6	20	D	C		KEM, SPR
M39003/06-4012	680	6	20	D	D		KEM, SPR
M39003/06-2013	820	6	10	D		B	KEM, SPR
M39003/06-3013	820	6	10	D	C		KEM, SPR
M39003/06-4013	820	6	10	D	D		KEM, SPR
M39003/06-2014	1000	6	10	D		B	KEM, SPR
M39003/06-3014	1000	6	10	D	C		KEM, SPR
M39003/06-4014	1000	6	10	D	D		KEM, SPR

M39003/06-2015	1000	6	20	D		B	KEM, SPR
M39003/06-3015	1000	6	20	D	C		KEM, SPR
M39003/06-4015	1000	6	20	D	D		KEM, SPR
M39003/06-2016	6.8	10	10	A		B	KEM, SPR
M39003/06-3016	6.8	10	10	A	C		KEM, SPR
M39003/06-4016	6.8	10	10	A	D		KEM, SPR
M39003/06-2017	6.8	10	20	A		B	KEM, SPR
M39003/06-3017	6.8	10	20	A	C		KEM, SPR
M39003/06-4017	6.8	10	20	A	D		KEM, SPR
M39003/06-2018	8.2	10	10	A		B	KEM, SPR
M39003/06-3018	8.2	10	10	A	C		KEM, SPR
M39003/06-4018	8.2	10	10	A	D		KEM, SPR
M39003/06-2019	47	10	10	B		B	KEM, SPR
M39003/06-3019	47	10	10	B	C		KEM, SPR
M39003/06-4019	47	10	10	B	D		KEM, SPR
M39003/06-2020	47	10	20	B		B	KEM, SPR
M39003/06-3020	47	10	20	B	C		KEM, SPR
M39003/06-4020	47	10	20	B	D		KEM, SPR
M39003/06-2021	56	10	10	B		B	KEM, SPR
M39003/06-3021	56	10	10	B	C		KEM, SPR
M39003/06-4021	56	10	10	B	D		KEM, SPR
M39003/06-2022	68	10	10	B		B	KEM, SPR
M39003/06-3022	68	10	10	B	C		KEM, SPR
M39003/06-4022	68	10	10	B	D		KEM, SPR
M39003/06-2023	68	10	20	B		B	KEM, SPR
M39003/06-3023	68	10	20	B	C		KEM, SPR
M39003/06-4023	68	10	20	B	D		KEM, SPR
M39003/06-2024	82	10	10	B		B	KEM, SPR
M39003/06-3024	82	10	10	B	C		KEM, SPR
M39003/06-4024	82	10	10	B	D		KEM, SPR
M39003/06-2025	220	10	10	C		B	KEM, SPR
M39003/06-3025	220	10	10	C	C		KEM, SPR
M39003/06-4025	220	10	10	C	D		KEM, SPR
M39003/06-2026	220	10	20	C		B	KEM, SPR
M39003/06-3026	220	10	20	C	C		KEM, SPR
M39003/06-4026	220	10	20	C	D		KEM, SPR
M39003/06-2027	270	10	10	C		B	KEM, SPR
M39003/06-3027	270	10	10	C	C		KEM, SPR
M39003/06-4027	270	10	10	C	D		KEM, SPR
M39003/06-2028	390	10	10	D		B	KEM, SPR
M39003/06-3028	390	10	10	D	C		KEM, SPR
M39003/06-4028	390	10	10	D	D		KEM, SPR
M39003/06-2029	470	10	10	D		B	KEM, SPR
M39003/06-3029	470	10	10	D	C		KEM, SPR
M39003/06-4029	470	10	10	D	D		KEM, SPR
M39003/06-2030	470	10	20	D		B	KEM, SPR
M39003/06-3030	470	10	20	D	C		KEM, SPR

M39003/06-4030	470	10	20	D	D		KEM, SPR
M39003/06-2031	560	10	10	D		B	KEM, SPR
M39003/06-3031	560	10	10	D	C		KEM, SPR
M39003/06-4031	560	10	10	D	D		KEM, SPR
M39003/06-2032	4.7	15	10	A		B	KEM, SPR
M39003/06-3032	4.7	15	10	A	C		KEM, SPR
M39003/06-4032	4.7	15	10	A	D		KEM, SPR
M39003/06-2033	4.7	15	20	A		B	KEM, SPR
M39003/06-3033	4.7	15	20	A	C		KEM, SPR
M39003/06-4033	4.7	15	20	A	D		KEM, SPR
M39003/06-2034	5.6	15	10	A		B	KEM, SPR
M39003/06-3034	5.6	15	10	A	C		KEM, SPR
M39003/06-4034	5.6	15	10	A	D		KEM, SPR
M39003/06-2035	33	15	10	B		B	KEM, SPR
M39003/06-3035	33	15	10	B	C		KEM, SPR
M39003/06-4035	33	15	10	B	D		KEM, SPR
M39003/06-2036	33	15	20	B		B	KEM, SPR
M39003/06-3036	33	15	20	B	C		KEM, SPR
M39003/06-4036	33	15	20	B	D		KEM, SPR
M39003/06-2037	39	15	10	B		B	KEM, SPR
M39003/06-3037	39	15	10	B	C		KEM, SPR
M39003/06-4037	39	15	10	B	D		KEM, SPR
M39003/06-2038	150	15	10	C		B	KEM, SPR
M39003/06-3038	150	15	10	C	C		KEM, SPR
M39003/06-4038	150	15	10	C	D		KEM, SPR
M39003/06-2039	150	15	20	C		B	KEM, SPR
M39003/06-3039	150	15	20	C	C		KEM, SPR
M39003/06-4039	150	15	20	C	D		KEM, SPR
M39003/06-2040	180	15	10	C		B	KEM, SPR
M39003/06-3040	180	15	10	C	C		KEM, SPR
M39003/06-4040	180	15	10	C	D		KEM, SPR
M39003/06-2041	220	15	10	D		B	KEM, SPR
M39003/06-3041	220	15	10	D	C		KEM, SPR
M39003/06-4041	220	15	10	D	D		KEM, SPR
M39003/06-2042	220	15	20	D		B	KEM, SPR
M39003/06-3042	220	15	20	D	C		KEM, SPR
M39003/06-4042	220	15	20	D	D		KEM, SPR
M39003/06-2043	270	15	10	D		B	KEM, SPR
M39003/06-3043	270	15	10	D	C		KEM, SPR
M39003/06-4043	270	15	10	D	D		KEM, SPR
M39003/06-2044	330	15	10	D		B	KEM, SPR
M39003/06-3044	330	15	10	D	C		KEM, SPR
M39003/06-4044	330	15	10	D	D		KEM, SPR
M39003/06-2045	330	15	20	D		B	KEM, SPR
M39003/06-3045	330	15	20	D	C		KEM, SPR
M39003/06-4045	330	15	20	D	D		KEM, SPR
M39003/06-2046	2.7	20	10	A		B	KEM, SPR

M39003/06-3046	2.7	20	10	A	C		KEM, SPR
M39003/06-4046	2.7	20	10	A	D		KEM, SPR
M39003/06-2047	3.3	20	10	A		B	KEM, SPR
M39003/06-3047	3.3	20	10	A	C		KEM, SPR
M39003/06-4047	3.3	20	10	A	D		KEM, SPR
M39003/06-2048	3.3	20	20	A		B	KEM, SPR
M39003/06-3048	3.3	20	20	A	C		KEM, SPR
M39003/06-4048	3.3	20	20	A	D		KEM, SPR
M39003/06-2049	3.9	20	10	A		B	KEM, SPR
M39003/06-3049	3.9	20	10	A	C		KEM, SPR
M39003/06-4049	3.9	20	10	A	D		KEM, SPR
M39003/06-2050	18	20	10	B		B	KEM, SPR
M39003/06-3050	18	20	10	B	C		KEM, SPR
M39003/06-4050	18	20	10	B	D		KEM, SPR
M39003/06-2051	22	20	10	B		B	KEM, SPR
M39003/06-3051	22	20	10	B	C		KEM, SPR
M39003/06-4051	22	20	10	B	D		KEM, SPR
M39003/06-2052	22	20	20	B		B	KEM, SPR
M39003/06-3052	22	20	20	B	C		KEM, SPR
M39003/06-4052	22	20	20	B	D		KEM, SPR
M39003/06-2053	27	20	10	B		B	KEM, SPR
M39003/06-3053	27	20	10	B	C		KEM, SPR
M39003/06-4053	27	20	10	B	D		KEM, SPR
M39003/06-2054	56	20	10	C		B	KEM, SPR
M39003/06-3054	56	20	10	C	C		KEM, SPR
M39003/06-4054	56	20	10	C	D		KEM, SPR
M39003/06-2055	68	20	10	C		B	KEM, SPR
M39003/06-3055	68	20	10	C	C		KEM, SPR
M39003/06-4055	68	20	10	C	D		KEM, SPR
M39003/06-2056	68	20	20	C		B	KEM, SPR
M39003/06-3056	68	20	20	C	C		KEM, SPR
M39003/06-4056	68	20	20	C	D		KEM, SPR
M39003/06-2057	82	20	10	C		B	KEM, SPR
M39003/06-3057	82	20	10	C	C		KEM, SPR
M39003/06-4057	82	20	10	C	D		KEM, SPR
M39003/06-2058	100	20	10	C		B	KEM, SPR
M39003/06-3058	100	20	10	C	C		KEM, SPR
M39003/06-4058	100	20	10	C	D		KEM, SPR
M39003/06-2059	100	20	20	C		B	KEM, SPR
M39003/06-3059	100	20	20	C	C		KEM, SPR
M39003/06-4059	100	20	20	C	D		KEM, SPR
M39003/06-2060	120	20	10	C		B	KEM, SPR
M39003/06-3060	120	20	10	C	C		KEM, SPR
M39003/06-4060	120	20	10	C	D		KEM, SPR
M39003/06-2061	150	20	10	D		B	KEM, SPR
M39003/06-3061	150	20	10	D	C		KEM, SPR
M39003/06-4061	150	20	10	D	D		KEM, SPR

M39003/06-2062	150	20	20	D		B	KEM, SPR
M39003/06-3062	150	20	20	D	C		KEM, SPR
M39003/06-4062	150	20	20	D	D		KEM, SPR
M39003/06-2063	180	20	10	D		B	KEM, SPR
M39003/06-3063	180	20	10	D	C		KEM, SPR
M39003/06-4063	180	20	10	D	D		KEM, SPR
M39003/06-2064	1.8	35	10	A		B	KEM, SPR
M39003/06-3064	1.8	35	10	A	C		KEM, SPR
M39003/06-4064	1.8	35	10	A	D		KEM, SPR
M39003/06-2065	8.2	35	10	B		B	KEM, SPR
M39003/06-3065	8.2	35	10	B	C		KEM, SPR
M39003/06-4065	8.2	35	10	B	D		KEM, SPR
M39003/06-2066	10	35	10	B		B	KEM, SPR
M39003/06-3066	10	35	10	B	C		KEM, SPR
M39003/06-4066	10	35	10	B	D		KEM, SPR
M39003/06-2067	10	35	20	B		B	KEM, SPR
M39003/06-3067	10	35	20	B	C		KEM, SPR
M39003/06-4067	10	35	20	B	D		KEM, SPR
M39003/06-2068	33	35	10	C		B	KEM, SPR
M39003/06-3068	33	35	10	C	C		KEM, SPR
M39003/06-4068	33	35	10	C	D		KEM, SPR
M39003/06-2069	33	35	20	C		B	KEM, SPR
M39003/06-3069	33	35	20	C	C		KEM, SPR
M39003/06-4069	33	35	20	C	D		KEM, SPR
M39003/06-2070	39	35	10	C		B	KEM, SPR
M39003/06-3070	39	35	10	C	C		KEM, SPR
M39003/06-4070	39	35	10	C	D		KEM, SPR
M39003/06-2071	47	35	10	C		B	KEM, SPR
M39003/06-3071	47	35	10	C	C		KEM, SPR
M39003/06-4071	47	35	10	C	D		KEM, SPR
M39003/06-2072	47	35	20	C		B	KEM, SPR
M39003/06-3072	47	35	20	C	C		KEM, SPR
M39003/06-4072	47	35	20	C	D		KEM, SPR
M39003/06-2073	56	35	10	D		B	KEM, SPR
M39003/06-3073	56	35	10	D	C		KEM, SPR
M39003/06-4073	56	35	10	D	D		KEM, SPR
M39003/06-2074	68	35	10	D		B	KEM, SPR
M39003/06-3074	68	35	10	D	C		KEM, SPR
M39003/06-4074	68	35	10	D	D		KEM, SPR
M39003/06-2075	68	35	20	D		B	KEM, SPR
M39003/06-3075	68	35	20	D	C		KEM, SPR
M39003/06-4075	68	35	20	D	D		KEM, SPR
M39003/06-2076	1.2	50	10	A		B	KEM, SPR
M39003/06-3076	1.2	50	10	A	C		KEM, SPR
M39003/06-4076	1.2	50	10	A	D		KEM, SPR
M39003/06-2077	1.5	50	10	A		B	KEM, SPR
M39003/06-3077	1.5	50	10	A	C		KEM, SPR

M39003/06-4077	1.5	50	10	A	D		KEM, SPR
M39003/06-2078	1.5	50	20	A		B	KEM, SPR
M39003/06-3078	1.5	50	20	A	C		KEM, SPR
M39003/06-4078	1.5	50	20	A	D		KEM, SPR
M39003/06-2079	5.6	50	10	B		B	KEM, SPR
M39003/06-3079	5.6	50	10	B	C		KEM, SPR
M39003/06-4079	5.6	50	10	B	D		KEM, SPR
M39003/06-2080	6.8	50	10	B		B	KEM, SPR
M39003/06-3080	6.8	50	10	B	C		KEM, SPR
M39003/06-4080	6.8	50	10	B	D		KEM, SPR
M39003/06-2081	6.8	50	20	B		B	KEM, SPR
M39003/06-3081	6.8	50	20	B	C		KEM, SPR
M39003/06-4081	6.8	50	20	B	D		KEM, SPR
M39003/06-2082	22	50	10	C		B	KEM, SPR
M39003/06-3082	22	50	10	C	C		KEM, SPR
M39003/06-4082	22	50	10	C	D		KEM, SPR
M39003/06-2083	22	50	20	C		B	KEM, SPR
M39003/06-3083	22	50	20	C	C		KEM, SPR
M39003/06-4083	22	50	20	C	D		KEM, SPR
M39003/06-2084	27	50	10	C		B	KEM, SPR
M39003/06-3084	27	50	10	C	C		KEM, SPR
M39003/06-4084	27	50	10	C	D		KEM, SPR
M39003/06-2085	33	50	10	D		B	KEM, SPR
M39003/06-3085	33	50	10	D	C		SPR
M39003/06-4085	33	50	10	D	D		SPR
M39003/06-2086	33	50	20	D		B	KEM, SPR
M39003/06-3086	33	50	20	D	C		SPR
M39003/06-4086	33	50	20	D	D		SPR
M39003/06-2087	39	50	10	D		B	KEM, SPR
M39003/06-3087	39	50	10	D	C		SPR
M39003/06-4087	39	50	10	D	D		SPR

Style CSR33

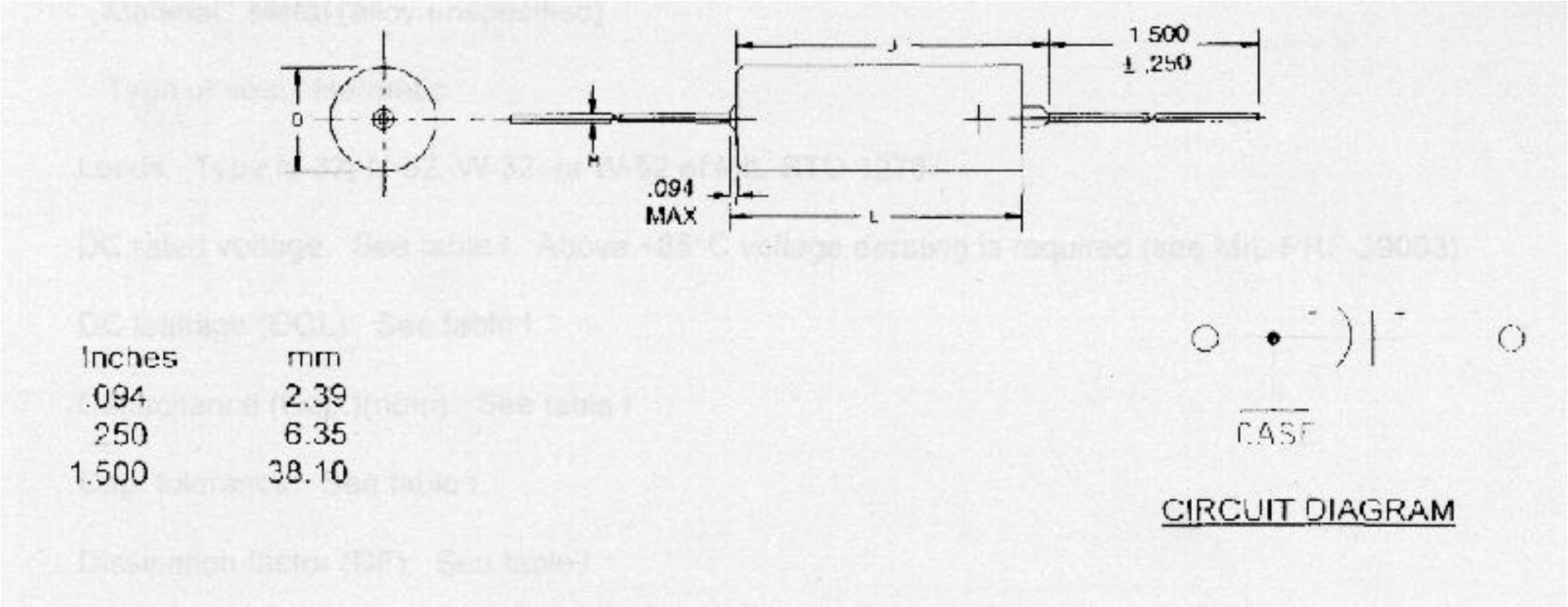

Case Size	L+/-0.031 (0.79)	D +0.016 (0.41) -0.015 (0.38)	M+/-0.002 (0.05)	J Max
A	0.286 (7.26)	0.135 (3.43)	0.020 (0.51)	0.422 (10.72)
B	0.474 (12.04)	0.185 (4.70)	0.020 (0.51)	0.610 (15.49)
C	0.686 (17.42)	0.289 (7.34)	0.025 (0.64)	0.822 (20.88)
D	0.786 (19.96)	0.351 (8.92)	0.025 (0.64)	0.922 (23.42)

Notes:

1) Dimensions are in inches.

2) Metric equivalents are in parentheses and are given for general information only.

3) The case insulation shall extend 0.015 (0.38 mm) minimum beyond each end. However, when a shrink-fitted insulation is used, it shall lap over the ends of the capacitor body.

4) Lead length may be a minimum of 1 inch long for use in tape and reel automatic insertion equipment, when specified.

	Cap.	Rated	Cap.	Case	Config.	Level 1	Level 2	
Part Number	Value (uF)	Voltage (V)	Tol (+/- %)	Size	(*)	(FRL)	(FRL)	Manufacturer
M39003/10-3001*	5.6	6	10	A	S or U	C		KEM
M39003/10-3002*	6.8	6	10	A	S or U	C		KEM
M39003/10-3003*	47	6	10	B	S or U	C		KEM
M39003/10-3004*	56	6	10	B	S or U	C		KEM
M39003/10-3005*	150	6	10	C	S or U	C		KEM
M39003/10-3006*	180	6	10	C	S or U	C		KEM
M39003/10-3007*	270	6	10	D	S or U	C		KEM
M39003/10-3008*	330	6	10	D	S or U	C		KEM
M39003/10-3009*	3.9	10	10	A	S or U	C		KEM
M39003/10-3010*	4.7	10	10	A	S or U	C		KEM
M39003/10-3011*	27	10	10	B	S or U	C		KEM
M39003/10-3012*	33	10	10	B	S or U	C		KEM
M39003/10-3013*	39	10	10	B	S or U	C		KEM
M39003/10-3014*	82	10	10	C	S or U	C		KEM
M39003/10-3015*	100	10	10	C	S or U	C		KEM
M39003/10-3016*	120	10	10	C	S or U	C		KEM
M39003/10-3017*	180	10	10	D	S or U	C		KEM
	Cap.	Rated	Cap.	Case	Config.	Level 1	Level 2	
Part Number	Value (uF)	Voltage (V)	Tol (+/- %)	Size	(*)	(FRL)	(FRL)	Manufacturer
M39003/10-3018*	220	10	10	D	S or U	C		KEM
M39003/10-3019*	2.7	15	10	A	S or U	C		KEM
M39003/10-3020*	3.3	15	10	A	S or U	C		KEM
M39003/10-3021*	18	15	10	B	S or U	C		KEM
M39003/10-3022*	22	15	10	B	S or U	C		KEM
M39003/10-3023*	56	15	10	C	S or U	C		KEM
M39003/10-3024*	68	15	10	C	S or U	C		KEM
M39003/10-3025*	120	15	10	D	S or U	C		KEM
M39003/10-3026*	150	15	10	D	S or U	C		KEM
	Cap.	Rated	Cap.	Case	Config.	Level 1	Level 2	
Part Number	Value (uF)	Voltage (V)	Tol (+/- %)	Size	(*)	(FRL)	(FRL)	Manufacturer
M39003/10-3027*	1.2	20	10	A	S or U	C		KEM
M39003/10-3028*	1.5	20	10	A	S or U	C		KEM
M39003/10-3029*	1.8	20	10	A	S or U	C		KEM
M39003/10-3030*	2.2	20	10	A	S or U	C		KEM
M39003/10-3031*	8.2	20	10	B	S or U	C		KEM
M39003/10-3032*	10	20	10	B	S or U	C		KEM
M39003/10-3033*	12	20	10	B	S or U	C		KEM
M39003/10-3034*	15	20	10	B	S or U	C		KEM
M39003/10-3035*	27	20	10	C	S or U	C		KEM
	Cap.	Rated	Cap.	Case	Config.	Level 1	Level 2	
Part Number	Value (uF)	Voltage (V)	Tol (+/- %)	Size	(*)	(FRL)	(FRL)	Manufacturer
M39003/10-3036*	33	20	10	C	S or U	C		KEM
M39003/10-3037*	39	20	10	C	S or U	C		KEM

M39003/10-3038*	47	20	10	C	S or U	C		KEM
M39003/10-2039*	56	20	10	D	S or U		B	KEM
M39003/10-2040*	68	20	10	D	S or U		B	KEM
M39003/10-2041*	82	20	10	D	S or U		B	KEM
M39003/10-2042*	100	20	10	D	S or U		B	KEM
M39003/10-2043*	5.6	35	10	B	S or U		B	KEM
M39003/10-2044*	6.8	35	10	B	S or U		B	KEM
	Cap.	Rated	Cap.	Case	Config.	Level 1	Level 2	
Part Number	Value (uF)	Voltage (V)	Tol (+/- %)	Size	(*)	(FRL)	(FRL)	Manufacturer
M39003/10-2045*	22	35	10	C	S or U		B	KEM
M39003/10-2046*	27	35	10	D	S or U		B	KEM
M39003/10-2047*	33	35	10	D	S or U		B	KEM
M39003/10-2048*	39	35	10	D	S or U		B	KEM
M39003/10-2049*	47	35	10	D	S or U		B	KEM
M39003/10-3067*	0.12	50	10	A	S or U	C		KEM
M39003/10-3068*	0.15	50	10	A	S or U	C		KEM
M39003/10-3069*	0.18	50	10	A	S or U	C		KEM
M39003/10-3070*	0.22	50	10	A	S or U	C		KEM
	Cap.	Rated	Cap.	Case	Config.	Level 1	Level 2	
Part Number	Value (uF)	Voltage (V)	Tol (+/- %)	Size	(*)	(FRL)	(FRL)	Manufacturer
M39003/10-3071*	0.27	50	10	A	S or U	C		KEM
M39003/10-3072*	0.33	50	10	A	S or U	C		KEM
M39003/10-3073*	0.39	50	10	A	S or U	C		KEM
M39003/10-3074*	0.47	50	10	A	S or U	C		KEM
M39003/10-3075*	0.56	50	10	A	S or U	C		KEM
M39003/10-3076*	0.68	50	10	A	S or U	C		KEM
M39003/10-3077*	0.82	50	10	A	S or U	C		KEM
M39003/10-3078*	1.0	50	10	A	S or U	C		KEM
M39003/10-3079*	1.2	50	10	B	S or U	C		KEM
	Cap.	Rated	Cap.	Case	Config.	Level 1	Level 2	
Part Number	Value (uF)	Voltage (V)	Tol (+/- %)	Size	(*)	(FRL)	(FRL)	Manufacturer
M39003/10-3080*	1.5	50	10	B	S or U	C		KEM
M39003/10-3081*	1.8	50	10	B	S or U	C		KEM
M39003/10-3082*	2.2	50	10	B	S or U	C		KEM
M39003/10-3083*	2.7	50	10	B	S or U	C		KEM
M39003/10-3084*	3.3	50	10	B	S or U	C		KEM
M39003/10-3085*	3.9	50	10	B	S or U	C		KEM
M39003/10-2086*	4.7	50	10	B	S or U		B	KEM
M39003/10-3087*	5.6	50	10	C	S or U	C		KEM
M39003/10-3088*	6.8	50	10	C	S or U	C		KEM
	Cap.	Rated	Cap.	Case	Config.	Level 1	Level 2	
Part Number	Value (uF)	Voltage (V)	Tol (+/- %)	Size	(*)	(FRL)	(FRL)	Manufacturer
M39003/10-3089*	8.2	50	10	C	S or U	C		KEM
M39003/10-3090*	10	50	10	C	S or U	C		KEM
M39003/10-2091*	12	50	10	C	S or U		B	KEM
M39003/10-2092*	15	50	10	C	S or U		B	KEM
M39003/10-2093*	18	50	10	C	S or U		B	KEM

M39003/10-2094*	22	50	10	D	S or U		B	KEM
M39003/10-3097*	0.15	75	10	A	S or U	C		KEM
M39003/10-3098*	0.18	75	10	A	S or U	C		KEM
M39003/10-3099*	0.22	75	10	A	S or U	C		KEM
	Cap.	Rated	Cap.	Case	Config.	Level 1	Level 2	
Part Number	Value (uF)	Voltage (V)	Tol (+/- %)	Size	(*)	(FRL)	(FRL)	Manufacturer
M39003/10-3100*	0.27	75	10	A	S or U	C		KEM
M39003/10-3101*	0.33	75	10	A	S or U	C		KEM
M39003/10-3102*	0.39	75	10	A	S or U	C		KEM
M39003/10-3103*	0.47	75	10	A	S or U	C		KEM
M39003/10-3104*	0.56	75	10	A	S or U	C		KEM
M39003/10-3105*	0.68	75	10	B	S or U	C		KEM
M39003/10-3106*	0.82	75	10	B	S or U	C		KEM
M39003/10-3107*	1.0	75	10	B	S or U	C		KEM
M39003/10-3108*	1.2	75	10	B	S or U	C		KEM
	Cap.	Rated	Cap.	Case	Config.	Level 1	Level 2	
Part Number	Value (uF)	Voltage (V)	Tol (+/- %)	Size	(*)	(FRL)	(FRL)	Manufacturer
M39003/10-3109*	1.5	75	10	B	S or U	C		KEM
M39003/10-3110*	1.8	75	10	B	S or U	C		KEM
M39003/10-3111*	2.2	75	10	B	S or U	C		KEM
M39003/10-2112*	2.7	75	10	B	S or U		B	KEM
M39003/10-2113*	3.3	75	10	B	S or U		B	KEM
M39003/10-2114*	3.9	75	10	B	S or U		B	KEM
M39003/10-2115*	4.7	75	10	C	S or U		B	KEM
M39003/10-2116*	5.6	75	10	C	S or U		B	KEM
M39003/10-2117*	6.8	75	10	C	S or U		B	KEM
	Cap.	Rated	Cap.	Case	Config.	Level 1	Level 2	
Part Number	Value (uF)	Voltage (V)	Tol (+/- %)	Size	(*)	(FRL)	(FRL)	Manufacturer
M39003/10-2118*	8.2	75	10	C	S or U		B	KEM
M39003/10-2119*	10	75	10	C	S or U		B	KEM
M39003/10-2120*	12	75	10	D	S or U		B	KEM
M39003/10-2121*	15	75	10	D	S or U		B	KEM
	Cap.	Rated	Cap.	Case	Config.	Level 1	Level 2	
Part Number	Value (uF)	Voltage (V)	Tol (+/- %)	Size	(*)	(FRL)	(FRL)	Manufacturer

Styles CSS13 and CSS33

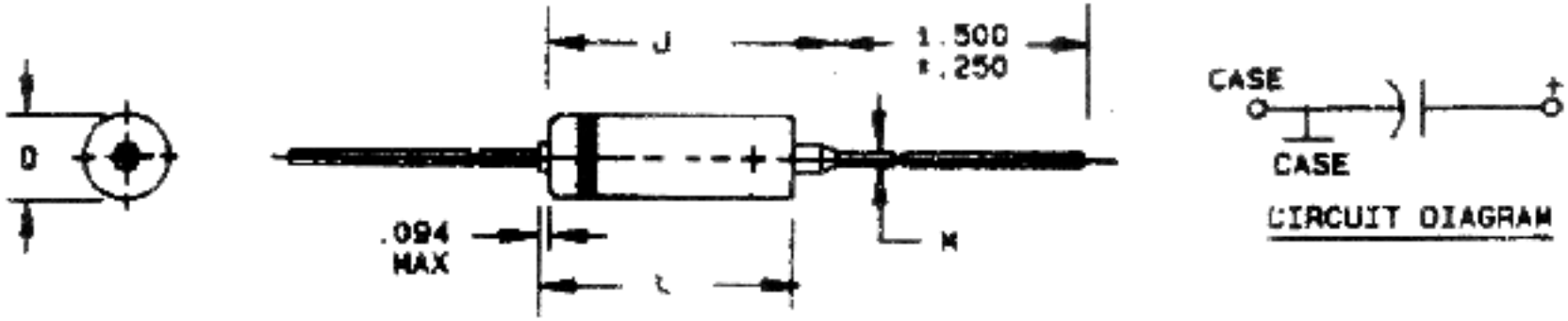

Dimensions

	Insulated	Insulated	Uninsulated	Uninsulated		
Case Size	L +/- 0.031	D +0.016 -0.015	L +/- 0.031	D +0.016 -0.015	M +/- 0.002	J max
A	0.286	0.135	0.250	0.125	0.020	0.422
B	0.474	0.185	0.438	0.175	0.020	0.610
C	0.686	0.289	0.650	0.279	0.025	0.822
D	0.786	0.351	0.750	0.341	0.025	0.922

Notes:

1) Dimensions are in inches.

2) Metric equivalents are given for general information only.

3) The case insulation shall extend 0.015 (0.38 mm) minimum beyond each end. However, when a shrink-fitted insulation is used, it shall lap over the ends of the capacitor body.

4) Lead length may be a minimum of 1-inch long for use in tape and reel automatic insertion equipment, when specified.

5) Black band to indicate negative end of case.

CSS33 Solid Tantalum Capacitors

	Cap.	Rated	Cap.	Case	Config.	Level 1	Level 2	
Part Number	Value (uF)	Voltage (V)	Tol (+/- %)	Size	(*)	(FRL)	(FRL)	Manufacturer
M39003/10-3500*	10	6	10	A	S or U	C		KEM
M39003/10-3501*	12	6	10	A	S or U	C		KEM
M39003/10-3502*	100	6	10	B	S or U	C		KEM

M39003/10-2503*	330	6	10	C	S or U		B	KEM
M39003/10-2505*	390	6	10	C	S or U		B	KEM
M39003/10-3502*	470	6	10	C	S or U		B	KEM
M39003/10-3506*	680	6	10	D	S or U	C		KEM
M39003/10-3507*	820	6	10	D	S or U	C		KEM
M39003/10-3508*	1000	6	10	D	S or U	C		KEM
M39003/10-3509*	6.8	10	10	A	S or U	C		KEM
M39003/10-3510*	8.2	10	10	A	S or U	C		KEM
M39003/10-3511*	47	10	10	B	S or U	C		KEM
M39003/10-3512*	56	10	10	B	S or U	C		KEM
M39003/10-3513*	68	10	10	B	S or U	C		KEM
M39003/10-3514*	82	10	10	B	S or U	C		KEM
M39003/10-2515*	220	10	10	C	S or U		B	KEM
M39003/10-2516*	270	10	10	C	S or U		B	KEM
M39003/10-3517*	390	10	10	D	S or U	C		KEM
	Cap.	Rated	Cap.	Case	Config.	Level 1	Level 2	
Part Number	Value (uF)	Voltage (V)	Tol (+/- %)	Size	(*)	(FRL)	(FRL)	Manufacturer
M39003/10-3518*	470	10	10	D	S or U	C		KEM
M39003/10-3519*	560	10	10	D	S or U	C		KEM
M39003/10-3520*	4.7	15	10	A	S or U	C		KEM
M39003/10-3521*	5.6	15	10	A	S or U	C		KEM
M39003/10-3522*	33	15	10	B	S or U	C		KEM
M39003/10-3523*	39	15	10	B	S or U	C		KEM
M39003/10-2524*	150	15	10	C	S or U		B	KEM
M39003/10-2525*	180	15	10	C	S or U		B	KEM
M39003/10-2526*	220	15	10	D	S or U		B	KEM
M39003/10-2527*	270	15	10	D	S or U		B	KEM
M39003/10-2528*	330	15	10	D	S or U		B	KEM
M39003/10-3529*	2.7	20	10	A	S or U	C		KEM
M39003/10-3530*	3.3	20	10	A	S or U	C		KEM
M39003/10-3531*	3.9	20	10	A	S or U	C		KEM
M39003/10-3532*	18	20	10	B	S or U	C		KEM
M39003/10-2533*	22	20	10	B	S or U		B	KEM
M39003/10-2534*	27	20	10	B	S or U		B	KEM
M39003/10-3535*	56	20	10	C	S or U	C		KEM
	Cap.	Rated	Cap.	Case	Config.	Level 1	Level 2	
Part Number	Value (uF)	Voltage (V)	Tol (+/- %)	Size	(*)	(FRL)	(FRL)	Manufacturer
M39003/10-3536*	68	20	10	C	S or U	C		KEM
M39003/10-2537*	82	20	10	C	S or U		B	KEM
M39003/10-2538*	100	20	10	C	S or U		B	KEM
M39003/10-2539*	120	20	10	C	S or U		B	KEM
M39003/10-2540*	150	20	10	D	S or U		B	KEM
M39003/10-2541*	180	20	10	D	S or U		B	KEM
M39003/10-2542*	1.8	35	10	A	S or U		B	KEM
M39003/10-2543*	8.2	35	10	B	S or U		B	KEM
M39003/10-2544*	10	35	10	B	S or U		B	KEM
	Cap.	Rated	Cap.	Case	Config.	Level 1	Level 2	

Part Number	Value (uF)	Voltage (V)	Tol (+/- %)	Size	(*)	(FRL)	(FRL)	Manufacturer
M39003/10-2545*	33	35	10	C	S or U		B	KEM
M39003/10-2546*	39	35	10	C	S or U		B	KEM
M39003/10-2547*	47	35	10	C	S or U		B	KEM
M39003/10-2548*	56	35	10	D	S or U		B	KEM
M39003/10-2549*	68	35	10	D	S or U		B	KEM
M39003/10-2550*	1.2	50	10	A	S or U		B	KEM
M39003/10-2551*	1.5	50	10	A	S or U		B	KEM
M39003/10-2552*	5.6	50	10	B	S or U		B	KEM
M39003/10-2553*	6.8	50	10	B	S or U		B	KEM
	Cap.	Rated	Cap.	Case	Config.	Level 1	Level 2	
Part Number	Value (uF)	Voltage (V)	Tol (+/- %)	Size	(*)	(FRL)	(FRL)	Manufacturer
M39003/10-2554*	22	50	10	C	S or U		B	KEM
M39003/10-2555*	27	50	10	C	S or U		B	KEM
M39003/10-2556*	33	50	10	D	S or U		B	KEM
M39003/10-2557*	39	50	10	D	S or U		B	KEM
	Cap.	Rated	Cap.	Case	Config.	Level 1	Level 2	
Part Number	Value (uF)	Voltage (V)	Tol (+/- %)	Size	(*)	(FRL)	(FRL)	Manufacturer

Go to -

NEPP

|

NPSL

|

Capacitors

MIL-PRF-39006, CAPACITORS

Fixed, Tantalum, Electrolytic (Nonsolid Electrolyte), Hermetically Sealed,

Established Reliability

CLR Styles

Part Number/Ordering Explanation

Important! Application Notes

Revision History for MIL-PRF-39006 Listing in the NPSL

Last Revision: 04/29/02

Click on the link below to see the associated parts selection listing:

Style	Detail Specification	Description (Click Below for Dimensions)
CLR79	MIL-PRF-39006/22	Polarized, Sintered Slug 30 uF to 1200 uF (6 V) 25 uF to 850 uF (8 V) 20 uF to 750 uF (10 V) 15 uF to 540 uF (15 V) 8 uF to 300 uF (30 V) 5 uF to 160 uF (50 V) 3.5 uF to 110 uF (75
CLR81	MIL-PRF-39006/25	Polarized, Sintered Slug, Extended Range 220 uF to 2200 uF (6 V) 180 uF to 1800 uF (8 V) 150 uF to 1500 uF (10 V) 100 uF to 1000 uF (15 V) 68 uF to 680 uF (25 V) 56 uF to 560 uF (3
CLR90	MIL-PRF-39006/30	Polarized, Sintered Slug 30 uF to 1200 uF (6 V) 25 uF to 850 uF (8 V) 20 uF to 750 uF (10 V) 15 uF to 540 uF (15 V) 8 uF to 300 uF (30 V) 5 uF to 160 uF (50 V) 3.5 uF to 110 uF (75
CLR91	MIL-PRF-39006/31	Polarized, Sintered Slug, Extended Range 220 uF to 2200 uF (6 V) 180 uF to 1800 uF (8 V) 150 uF to 1500 uF (10 V) 100 uF to 1000 uF (15 V) 68 uF to 680 uF (25 V) 56 uF to 560 uF (3

Note: The last known source for wet tantalum foil capacitors has stopped production. Therefore, the following capacitor types are NOT included in this parts selection list.

Style	Detail Specification	Description
CLR25	MIL-C-39006/1	Polarized, Etched Foil
CLR27	MIL-C-39006/2	Non-Polarized, Etched Foil
CLR35	MIL-C-39006/3	Polarized, Plain Foil
CLR37	MIL-C-39006/4	Non-Polarized, Plain Foil

APPLICATION NOTES FOR MIL-PRF-39006

1) CLR79 and CLR81 styles can be a source of transient potentials (intermittent shorts) during vibrational stimuli. Consult the project parts engineer for recommendations.

2) CLR79, CLR81, CLR90 and CLR91 tantalum capacitors are polar devices that are sensitive to reverse bias voltage. Reverse bias application of these parts should be avoided. Per MIL-PRF-39006 these capacitors are capable of handling up to 3 volts of reverse polarity at 85deg.C regardless of capacitor voltage rating with some degradation in their leakage current characteristics. Exceeding 3 volts reverse bias may cause rapid deterioration of the capacitor which can lead to catastrophic failure (short circuit). Refer to NEPAG Lesson Learned Bulletin

NEPAG-LLB-2001-002

for further details.

3) M39006 style capacitors rated at 125 V are NOT recommended for use and are therefore NOT listed within the NPSL. In order to produce the higher voltage ratings the manufacturers use alternate process steps compared to the lower voltage styles. These alternate process steps have NOT been found to consistently produce reliable parts as evidenced by frequent stop shipment orders by the Military qualifying activity.

Revision History for MIL-PRF-39006 Listing in the NPSL

04/29/02	Removed the 125 V rated CLR79, CLR81, CLR90 and CLR91 capacitors from the NPSL and included application note explaining reasons why. Added application note describing voltage polarity sensitivity of th
05/21/98	Added case sizes to the parts list tables Added outline drawings to this section.
03/03/98	Editorial addition of CLR90 and CLR91 to the part number explanation page
12/01/97	Made changes indicating the specification conversion to a performance specification (MIL-PRF-39006 instead of MIL-C-39006)
05/01/97	Initial Release of MIL-C-39006 Section in the NPSL

Part Number Ordering Information, example and explanation:

M39006/22-0601H where,

M39006	/22	-0601	H
Military Specification Number	Detail Specification Number	Four-digit dash number which uniquely identifies the capacitance, tolerance, rated dc voltage, dc leakage, and failure rate level	H denotes a const

Part number ordering options are developed using the following criteria:

Style	Detail Specification	Description		Failure Rate Level
CLR79	MIL-PRF-39006/22	Polarized, Sintered Slug		P = 0.1%/1000 hours (See General Requirements, Level 2)
CLR81	MIL-PRF-39006/25	Polarized, Sintered Slug, Extended Range		R = 0.01%/1000 hours (See General Requirements, Level 1)
CLR90	MIL-PRF-39006/30	Polarized, Sintered Slug		
CLR91	MIL-PRF-39006/31	Polarized, Sintered Slug, Extended Range		

CLR79 Wet Tantalum Slug Capacitors

	Cap.	Rated	Cap.	Case	Level 1	Level 2	
Part Number	Value (uF)	Voltage (V)	Tol (+/- %)	Size	(FRL)	(FRL)	Manufacturer
M39006/22-0441H	30	6	20	T1	R		MAL, TAN
M39006/22-0221H	30	6	20	T1		P	MAL, TAN
M39006/22-0442H	30	6	10	T1	R		MAL, TAN
M39006/22-0222H	30	6	10	T1		P	MAL, TAN
M39006/22-0443H	30	6	5	T1	R		MAL, TAN
M39006/22-0223H	30	6	5	T1		P	MAL, TAN
M39006/22-0444H	68	6	20	T1	R		MAL, TAN
M39006/22-0224H	68	6	20	T1		P	MAL, TAN
M39006/22-0445H	68	6	10	T1	R		MAL, TAN
M39006/22-0225H	68	6	10	T1		P	MAL, TAN
M39006/22-0446H	68	6	5	T1	R		MAL, TAN
M39006/22-0226H	68	6	5	T1		P	MAL, TAN
M39006/22-0447H	140	6	20	T2	R		MAL, TAN
M39006/22-0227H	140	6	20	T2		P	MAL, TAN
M39006/22-0448H	140	6	10	T2	R		MAL, TAN
M39006/22-0228H	140	6	10	T2		P	MAL, TAN
M39006/22-0449H	140	6	5	T2	R		MAL, TAN
M39006/22-0229H	140	6	5	T2		P	MAL, TAN
	Cap.	Rated	Cap.	Case	Level 1	Level 2	
Part Number	Value (uF)	Voltage (V)	Tol (+/- %)	Size	(FRL)	(FRL)	Manufacturer
M39006/22-0450H	270	6	20	T2	R		MAL, TAN
M39006/22-0230H	270	6	20	T2		P	MAL, TAN
M39006/22-0451H	270	6	10	T2	R		MAL, TAN
M39006/22-0231H	270	6	10	T2		P	MAL, TAN
M39006/22-0452H	270	6	5	T2	R		MAL, TAN
M39006/22-0232H	270	6	5	T2		P	MAL, TAN
M39006/22-0453H	330	6	20	T3	R		MAL, TAN
M39006/22-0233H	330	6	20	T3		P	MAL, TAN
M39006/22-0454H	330	6	10	T3	R		MAL, TAN
M39006/22-0234H	330	6	10	T3		P	MAL, TAN
M39006/22-0455H	330	6	5	T3	R		MAL, TAN
M39006/22-0235H	330	6	5	T3		P	MAL, TAN
M39006/22-0456H	560	6	20	T3	R		MAL, TAN
M39006/22-0236H	560	6	20	T3		P	MAL, TAN
M39006/22-0457H	560	6	10	T3	R		MAL, TAN
M39006/22-0237H	560	6	10	T3		P	MAL, TAN
M39006/22-0458H	560	6	5	T3	R		MAL, TAN
M39006/22-0238H	560	6	5	T3		P	MAL, TAN
	Cap.	Rated	Cap.	Case	Level 1	Level 2	
Part Number	Value (uF)	Voltage (V)	Tol (+/- %)	Size	(FRL)	(FRL)	Manufacturer

M39006/22-0459H	1200	6	20	T4	R		MAL, TAN
M39006/22-0239H	1200	6	20	T4		P	MAL, TAN
M39006/22-0460H	1200	6	10	T4	R		MAL, TAN
M39006/22-0240H	1200	6	10	T4		P	MAL, TAN
M39006/22-0461H	25	8	20	T1	R		MAL, TAN
M39006/22-0241H	25	8	20	T1		P	MAL, TAN
M39006/22-0462H	25	8	10	T1	R		MAL, TAN
M39006/22-0242H	25	8	10	T1		P	MAL, TAN
M39006/22-0463H	25	8	5	T1	R		MAL, TAN
M39006/22-0243H	25	8	5	T1		P	MAL, TAN
M39006/22-0464H	56	8	20	T1	R		MAL, TAN
M39006/22-0244H	56	8	20	T1		P	MAL, TAN
M39006/22-0465H	56	8	10	T1	R		MAL, TAN
M39006/22-0245H	56	8	10	T1		P	MAL, TAN
M39006/22-0466H	56	8	5	T1	R		MAL, TAN
M39006/22-0246H	56	8	5	T1		P	MAL, TAN
M39006/22-0467H	120	8	20	T2	R		MAL, TAN
M39006/22-0247H	120	8	20	T2		P	MAL, TAN
	Cap.	Rated	Cap.	Case	Level 1	Level 2	
Part Number	Value (uF)	Voltage (V)	Tol (+/- %)	Size	(FRL)	(FRL)	Manufacturer
M39006/22-0468H	120	8	10	T2	R		MAL, TAN
M39006/22-0248H	120	8	10	T2		P	MAL, TAN
M39006/22-0469H	120	8	5	T2	R		MAL, TAN
M39006/22-0249H	120	8	5	T2		P	MAL, TAN
M39006/22-0470H	220	8	20	T2	R		MAL, TAN
M39006/22-0250H	220	8	20	T2		P	MAL, TAN
M39006/22-0471H	220	8	10	T2	R		MAL, TAN
M39006/22-0251H	220	8	10	T2		P	MAL, TAN
M39006/22-0472H	220	8	5	T2	R		MAL, TAN
M39006/22-0252H	220	8	5	T2		P	MAL, TAN
M39006/22-0473H	290	8	20	T3	R		MAL, TAN
M39006/22-0253H	290	8	20	T3		P	MAL, TAN
M39006/22-0474H	290	8	10	T3	R		MAL, TAN
M39006/22-0254H	290	8	10	T3		P	MAL, TAN
M39006/22-0475H	290	8	5	T3	R		MAL, TAN
M39006/22-0255H	290	8	5	T3		P	MAL, TAN
M39006/22-0476H	430	8	20	T3	R		MAL, TAN
M39006/22-0256H	430	8	20	T3		P	MAL, TAN
	Cap.	Rated	Cap.	Case	Level 1	Level 2	
Part Number	Value (uF)	Voltage (V)	Tol (+/- %)	Size	(FRL)	(FRL)	Manufacturer
M39006/22-0477H	430	8	10	T3	R		MAL, TAN
M39006/22-0257H	430	8	10	T3		P	MAL, TAN
M39006/22-0478H	430	8	5	T3	R		MAL, TAN
M39006/22-0258H	430	8	5	T3		P	MAL, TAN
M39006/22-0479H	850	8	20	T4	R		MAL, TAN
M39006/22-0259H	850	8	20	T4		P	MAL, TAN
M39006/22-0480H	850	8	10	T4	R		MAL, TAN

M39006/22-0260H	850	8	10	T4		P	MAL, TAN
M39006/22-0481H	20	10	20	T1	R		MAL, TAN
M39006/22-0261H	20	10	20	T1		P	MAL, TAN
M39006/22-0482H	20	10	10	T1	R		MAL, TAN
M39006/22-0262H	20	10	10	T1		P	MAL, TAN
M39006/22-0483H	20	10	5	T1	R		MAL, TAN
M39006/22-0263H	20	10	5	T1		P	MAL, TAN
M39006/22-0484H	47	10	20	T1	R		MAL, TAN
M39006/22-0264H	47	10	20	T1		P	MAL, TAN
	Cap.	Rated	Cap.	Case	Level 1	Level 2	
Part Number	Value (uF)	Voltage (V)	Tol (+/- %)	Size	(FRL)	(FRL)	Manufacturer
M39006/22-0485H	47	10	10	T1	R		MAL, TAN
M39006/22-0265H	47	10	10	T1		P	MAL, TAN
M39006/22-0486H	47	10	5	T1	R		MAL, TAN
M39006/22-0266H	47	10	5	T1		P	MAL, TAN
M39006/22-0487H	100	10	20	T2	R		MAL, TAN
M39006/22-0267H	100	10	20	T2		P	MAL, TAN
M39006/22-0488H	100	10	10	T2	R		MAL, TAN
M39006/22-0268H	100	10	10	T2		P	MAL, TAN
M39006/22-0489H	100	10	5	T2	R		MAL, TAN
M39006/22-0269H	100	10	5	T2		P	MAL, TAN
M39006/22-0490H	180	10	20	T2	R		MAL, TAN
M39006/22-0270H	180	10	20	T2		P	MAL, TAN
M39006/22-0491H	180	10	10	T2	R		MAL, TAN
M39006/22-0271H	180	10	10	T2		P	MAL, TAN
M39006/22-0492H	180	10	5	T2	R		MAL, TAN
M39006/22-0272H	180	10	5	T2		P	MAL, TAN
M39006/22-0493H	250	10	20	T3	R		MAL, TAN
M39006/22-0273H	250	10	20	T3		P	MAL, TAN
	Cap.	Rated	Cap.	Case	Level 1	Level 2	
Part Number	Value (uF)	Voltage (V)	Tol (+/- %)	Size	(FRL)	(FRL)	Manufacturer
M39006/22-0494H	250	10	10	T3	R		MAL, TAN
M39006/22-0274H	250	10	10	T3		P	MAL, TAN
M39006/22-0495H	250	10	5	T3	R		MAL, TAN
M39006/22-0275H	250	10	5	T3		P	MAL, TAN
M39006/22-0496H	390	10	20	T3	R		MAL, TAN
M39006/22-0276H	390	10	20	T3		P	MAL, TAN
M39006/22-0497H	390	10	10	T3	R		MAL, TAN
M39006/22-0277H	390	10	10	T3		P	MAL, TAN
M39006/22-0498H	390	10	5	T3	R		MAL, TAN
M39006/22-0278H	390	10	5	T3		P	MAL, TAN
M39006/22-0499H	750	10	20	T4	R		MAL, TAN
M39006/22-0279H	750	10	20	T4		P	MAL, TAN
M39006/22-0500H	750	10	10	T4	R		MAL, TAN
M39006/22-0280H	750	10	10	T4		P	MAL, TAN
M39006/22-0501H	15	15	20	T1	R		MAL, TAN
M39006/22-0281H	15	15	20	T1		P	MAL, TAN

M39006/22-0502H	15	15	10	T1	R		MAL, TAN
M39006/22-0282H	15	15	10	T1		P	MAL, TAN
	Cap.	Rated	Cap.	Case	Level 1	Level 2	
Part Number	Value (uF)	Voltage (V)	Tol (+/- %)	Size	(FRL)	(FRL)	Manufacturer
M39006/22-0503H	15	15	5	T1	R		MAL, TAN
M39006/22-0283H	15	15	5	T1		P	MAL, TAN
M39006/22-0504H	33	15	20	T1	R		MAL, TAN
M39006/22-0284H	33	15	20	T1		P	MAL, TAN
M39006/22-0505H	33	15	10	T1	R		MAL, TAN
M39006/22-0285H	33	15	10	T1		P	MAL, TAN
M39006/22-0506H	33	15	5	T1	R		MAL, TAN
M39006/22-0286H	33	15	5	T1		P	MAL, TAN
M39006/22-0507H	70	15	20	T2	R		MAL, TAN
M39006/22-0287H	70	15	20	T2		P	MAL, TAN
M39006/22-0508H	70	15	10	T2	R		MAL, TAN
M39006/22-0288H	70	15	10	T2		P	MAL, TAN
M39006/22-0509H	70	15	5	T2	R		MAL, TAN
M39006/22-0289H	70	15	5	T2		P	MAL, TAN
M39006/22-0510H	120	15	20	T2	R		MAL, TAN
M39006/22-0290H	120	15	20	T2		P	MAL, TAN
M39006/22-0511H	120	15	10	T2	R		MAL, TAN
M39006/22-0291H	120	15	10	T2		P	MAL, TAN
	Cap.	Rated	Cap.	Case	Level 1	Level 2	
Part Number	Value (uF)	Voltage (V)	Tol (+/- %)	Size	(FRL)	(FRL)	Manufacturer
M39006/22-0512H	120	15	5	T2	R		MAL, TAN
M39006/22-0292H	120	15	5	T2		P	MAL, TAN
M39006/22-0513H	170	15	20	T3	R		MAL, TAN
M39006/22-0293H	170	15	20	T3		P	MAL, TAN
M39006/22-0514H	170	15	10	T3	R		MAL, TAN
M39006/22-0294H	170	15	10	T3		P	MAL, TAN
M39006/22-0515H	170	15	5	T3	R		MAL, TAN
M39006/22-0295H	170	15	5	T3		P	MAL, TAN
M39006/22-0516H	270	15	20	T3	R		MAL, TAN
M39006/22-0296H	270	15	20	T3		P	MAL, TAN
M39006/22-0517H	270	15	10	T3	R		MAL, TAN
M39006/22-0297H	270	15	10	T3		P	MAL, TAN
M39006/22-0518H	270	15	5	T3	R		MAL, TAN
M39006/22-0298H	270	15	5	T3		P	MAL, TAN
M39006/22-0519H	540	15	20	T4	R		MAL, TAN
M39006/22-0299H	540	15	20	T4		P	MAL, TAN
M39006/22-0520H	540	15	10	T4	R		MAL, TAN
M39006/22-0300H	540	15	10	T4		P	MAL, TAN
	Cap.	Rated	Cap.	Case	Level 1	Level 2	
Part Number	Value (uF)	Voltage (V)	Tol (+/- %)	Size	(FRL)	(FRL)	Manufacturer
M39006/22-0541H	8	30	20	T1	R		MAL, TAN
M39006/22-0321H	8	30	20	T1		P	MAL, TAN
M39006/22-0542H	8	30	10	T1	R		MAL, TAN

M39006/22-0322H	8	30	10	T1		P	MAL, TAN
M39006/22-0543H	8	30	5	T1	R		MAL, TAN
M39006/22-0323H	8	30	5	T1		P	MAL, TAN
M39006/22-0544H	15	30	20	T1	R		MAL, TAN
M39006/22-0324H	15	30	20	T1		P	MAL, TAN
M39006/22-0545H	15	30	10	T1	R		MAL, TAN
M39006/22-0325H	15	30	10	T1		P	MAL, TAN
M39006/22-0546H	15	30	5	T1	R		MAL, TAN
M39006/22-0326H	15	30	5	T1		P	MAL, TAN
M39006/22-0547H	40	30	20	T2	R		MAL, TAN
M39006/22-0327H	40	30	20	T2		P	MAL, TAN
M39006/22-0548H	40	30	10	T2	R		MAL, TAN
M39006/22-0328H	40	30	10	T2		P	MAL, TAN
M39006/22-0549H	40	30	5	T2	R		MAL, TAN
M39006/22-0329H	40	30	5	T2		P	MAL, TAN
	Cap.	Rated	Cap.	Case	Level 1	Level 2	
Part Number	Value (uF)	Voltage (V)	Tol (+/- %)	Size	(FRL)	(FRL)	Manufacturer
M39006/22-0550H	68	30	20	T2	R		MAL, TAN
M39006/22-0330H	68	30	20	T2		P	MAL, TAN
M39006/22-0551H	68	30	10	T2	R		MAL, TAN
M39006/22-0331H	68	30	10	T2		P	MAL, TAN
M39006/22-0552H	68	30	5	T2	R		MAL, TAN
M39006/22-0332H	68	30	5	T2		P	MAL, TAN
M39006/22-0553H	100	30	20	T3	R		MAL, TAN
M39006/22-0333H	100	30	20	T3		P	MAL, TAN
M39006/22-0554H	100	30	10	T3	R		MAL, TAN
M39006/22-0334H	100	30	10	T3		P	MAL, TAN
M39006/22-0555H	100	30	5	T3	R		MAL, TAN
M39006/22-0335H	100	30	5	T3		P	MAL, TAN
M39006/22-0556H	150	30	20	T3	R		MAL, TAN
M39006/22-0336H	150	30	20	T3		P	MAL, TAN
M39006/22-0557H	150	30	10	T3	R		MAL, TAN
M39006/22-0337H	150	30	10	T3		P	MAL, TAN
M39006/22-0558H	150	30	5	T3	R		MAL, TAN
M39006/22-0338H	150	30	5	T3		P	MAL, TAN
	Cap.	Rated	Cap.	Case	Level 1	Level 2	
Part Number	Value (uF)	Voltage (V)	Tol (+/- %)	Size	(FRL)	(FRL)	Manufacturer
M39006/22-0559H	300	30	20	T4	R		MAL, TAN
M39006/22-0339H	300	30	20	T4		P	MAL, TAN
M39006/22-0560H	300	30	10	T4	R		MAL, TAN
M39006/22-0340H	300	30	10	T4		P	MAL, TAN
M39006/22-0561H	5	50	20	T1	R		MAL, TAN
M39006/22-0341H	5	50	20	T1		P	MAL, TAN
M39006/22-0562H	5	50	10	T1	R		MAL, TAN
M39006/22-0342H	5	50	10	T1		P	MAL, TAN
M39006/22-0563H	5	50	5	T1	R		MAL, TAN
M39006/22-0343H	5	50	5	T1		P	MAL, TAN

M39006/22-0564H	10	50	20	T1	R		MAL, TAN
M39006/22-0344H	10	50	20	T1		P	MAL, TAN
M39006/22-0565H	10	50	10	T1	R		MAL, TAN
M39006/22-0345H	10	50	10	T1		P	MAL, TAN
M39006/22-0566H	10	50	5	T1	R		MAL, TAN
M39006/22-0346H	10	50	5	T1		P	MAL, TAN
M39006/22-0567H	25	50	20	T2	R		MAL, TAN
M39006/22-0347H	25	50	20	T2		P	MAL, TAN
	Cap.	Rated	Cap.	Case	Level 1	Level 2	
Part Number	Value (uF)	Voltage (V)	Tol (+/- %)	Size	(FRL)	(FRL)	Manufacturer
M39006/22-0568H	25	50	10	T2	R		MAL, TAN
M39006/22-0348H	25	50	10	T2		P	MAL, TAN
M39006/22-0569H	25	50	5	T2	R		MAL, TAN
M39006/22-0349H	25	50	5	T2		P	MAL, TAN
M39006/22-0570H	47	50	20	T2	R		MAL, TAN
M39006/22-0350H	47	50	20	T2		P	MAL, TAN
M39006/22-0571H	47	50	10	T2	R		MAL, TAN
M39006/22-0351H	47	50	10	T2		P	MAL, TAN
M39006/22-0572H	47	50	5	T2	R		MAL, TAN
M39006/22-0352H	47	50	5	T2		P	MAL, TAN
M39006/22-0573H	60	50	20	T3	R		MAL, TAN
M39006/22-0353H	60	50	20	T3		P	MAL, TAN
M39006/22-0574H	60	50	10	T3	R		MAL, TAN
M39006/22-0354H	60	50	10	T3		P	MAL, TAN
M39006/22-0575H	60	50	5	T3	R		MAL, TAN
M39006/22-0355H	60	50	5	T3		P	MAL, TAN
M39006/22-0576H	82	50	20	T3	R		MAL, TAN
M39006/22-0356H	82	50	20	T3		P	MAL, TAN
	Cap.	Rated	Cap.	Case	Level 1	Level 2	
Part Number	Value (uF)	Voltage (V)	Tol (+/- %)	Size	(FRL)	(FRL)	Manufacturer
M39006/22-0577H	82	50	10	T3	R		MAL, TAN
M39006/22-0357H	82	50	10	T3		P	MAL, TAN
M39006/22-0578H	82	50	5	T3	R		MAL, TAN
M39006/22-0358H	82	50	5	T3		P	MAL, TAN
M39006/22-0579H	160	50	20	T4	R		MAL, TAN
M39006/22-0359H	160	50	20	T4		P	MAL, TAN
M39006/22-0580H	160	50	10	T4	R		MAL, TAN
M39006/22-0360H	160	50	10	T4		P	MAL, TAN
M39006/22-0601H	3.5	75	20	T1	R		MAL, TAN
M39006/22-0381H	3.5	75	20	T1		P	MAL, TAN
M39006/22-0602H	3.5	75	10	T1	R		MAL, TAN
M39006/22-0382H	3.5	75	10	T1		P	MAL, TAN
M39006/22-0603H	3.5	75	5	T1	R		MAL, TAN
M39006/22-0383H	3.5	75	5	T1		P	MAL, TAN
M39006/22-0604H	6.8	75	20	T1	R		MAL, TAN
M39006/22-0384H	6.8	75	20	T1		P	MAL, TAN
M39006/22-0605H	6.8	75	10	T1	R		MAL, TAN

M39006/22-0385H	6.8	75	10	T1		P	MAL, TAN
	Cap.	Rated	Cap.	Case	Level 1	Level 2	
Part Number	Value (uF)	Voltage (V)	Tol (+/- %)	Size	(FRL)	(FRL)	Manufacturer
M39006/22-0606H	6.8	75	5	T1	R		MAL, TAN
M39006/22-0386H	6.8	75	5	T1		P	MAL, TAN
M39006/22-0607H	15	75	20	T2	R		MAL, TAN
M39006/22-0387H	15	75	20	T2		P	MAL, TAN
M39006/22-0608H	15	75	10	T2	R		MAL, TAN
M39006/22-0388H	15	75	10	T2		P	MAL, TAN
M39006/22-0609H	15	75	5	T2	R		MAL, TAN
M39006/22-0389H	15	75	5	T2		P	MAL, TAN
M39006/22-0610H	33	75	20	T2	R		MAL, TAN
M39006/22-0390H	33	75	20	T2		P	MAL, TAN
M39006/22-0611H	33	75	10	T2	R		MAL, TAN
M39006/22-0391H	33	75	10	T2		P	MAL, TAN
M39006/22-0612H	33	75	5	T2	R		MAL, TAN
M39006/22-0392H	33	75	5	T2		P	MAL, TAN
M39006/22-0613H	40	75	20	T3	R		MAL, TAN
M39006/22-0393H	40	75	20	T3		P	MAL, TAN
M39006/22-0614H	40	75	10	T3	R		MAL, TAN
M39006/22-0394H	40	75	10	T3		P	MAL, TAN
	Cap.	Rated	Cap.	Case	Level 1	Level 2	
Part Number	Value (uF)	Voltage (V)	Tol (+/- %)	Size	(FRL)	(FRL)	Manufacturer
M39006/22-0615H	40	75	5	T3	R		MAL, TAN
M39006/22-0395H	40	75	5	T3		P	MAL, TAN
M39006/22-0616H	56	75	20	T3	R		MAL, TAN
M39006/22-0396H	56	75	20	T3		P	MAL, TAN
M39006/22-0617H	56	75	10	T3	R		MAL, TAN
M39006/22-0397H	56	75	10	T3		P	MAL, TAN
M39006/22-0618H	56	75	5	T3	R		MAL, TAN
M39006/22-0398H	56	75	5	T3		P	MAL, TAN
M39006/22-0619H	110	75	20	T4	R		MAL, TAN
M39006/22-0399H	110	75	20	T4		P	MAL, TAN
M39006/22-0620H	110	75	10	T4	R		MAL, TAN
M39006/22-0400H	110	75	10	T4		P	MAL, TAN
M39006/22-0621H	2.5	100	20	T1	R		MAL, TAN
M39006/22-0401H	2.5	100	20	T1		P	MAL, TAN
M39006/22-0622H	2.5	100	10	T1	R		MAL, TAN
M39006/22-0402H	2.5	100	10	T1		P	MAL, TAN
M39006/22-0623H	2.5	100	5	T1	R		MAL, TAN
M39006/22-0403H	2.5	100	5	T1		P	MAL, TAN
	Cap.	Rated	Cap.	Case	Level 1	Level 2	
Part Number	Value (uF)	Voltage (V)	Tol (+/- %)	Size	(FRL)	(FRL)	Manufacturer
M39006/22-0624H	4.7	100	20	T1	R		MAL, TAN
M39006/22-0404H	4.7	100	20	T1		P	MAL, TAN
M39006/22-0625H	4.7	100	10	T1	R		MAL, TAN
M39006/22-0405H	4.7	100	10	T1		P	MAL, TAN

M39006/22-0626H	4.7	100	5	T1	R		MAL, TAN
M39006/22-0406H	4.7	100	5	T1		P	MAL, TAN
M39006/22-0627H	11	100	20	T2	R		MAL, TAN
M39006/22-0407H	11	100	20	T2		P	MAL, TAN
M39006/22-0628H	11	100	10	T2	R		MAL, TAN
M39006/22-0408H	11	100	10	T2		P	MAL, TAN
M39006/22-0629H	11	100	5	T2	R		MAL, TAN
M39006/22-0409H	11	100	5	T2		P	MAL, TAN
M39006/22-0630H	22	100	20	T2	R		MAL, TAN
M39006/22-0410H	22	100	20	T2		P	MAL, TAN
M39006/22-0631H	22	100	10	T2	R		MAL, TAN
M39006/22-0411H	22	100	10	T2		P	MAL, TAN
M39006/22-0632H	22	100	5	T2	R		MAL, TAN
M39006/22-0412H	22	100	5	T2		P	MAL, TAN
	Cap.	Rated	Cap.	Case	Level 1	Level 2	
Part Number	Value (uF)	Voltage (V)	Tol (+/- %)	Size	(FRL)	(FRL)	Manufacturer
M39006/22-0633H	30	100	20	T3	R		MAL, TAN
M39006/22-0413H	30	100	20	T3		P	MAL, TAN
M39006/22-0634H	30	100	10	T3	R		MAL, TAN
M39006/22-0414H	30	100	10	T3		P	MAL, TAN
M39006/22-0635H	30	100	5	T3	R		MAL, TAN
M39006/22-0415H	30	100	5	T3		P	MAL, TAN
M39006/22-0636H	43	100	20	T3	R		MAL, TAN
M39006/22-0416H	43	100	20	T3		P	MAL, TAN
M39006/22-0637H	43	100	10	T3	R		MAL, TAN
M39006/22-0417H	43	100	10	T3		P	MAL, TAN
M39006/22-0638H	43	100	5	T3	R		MAL, TAN
M39006/22-0418H	43	100	5	T3		P	MAL, TAN
M39006/22-0639H	86	100	20	T4	R		MAL, TAN
M39006/22-0419H	86	100	20	T4		P	MAL, TAN
M39006/22-0640H	86	100	10	T4	R		MAL, TAN
M39006/22-0420H	86	100	10	T4		P	MAL, TAN

Style CLR79

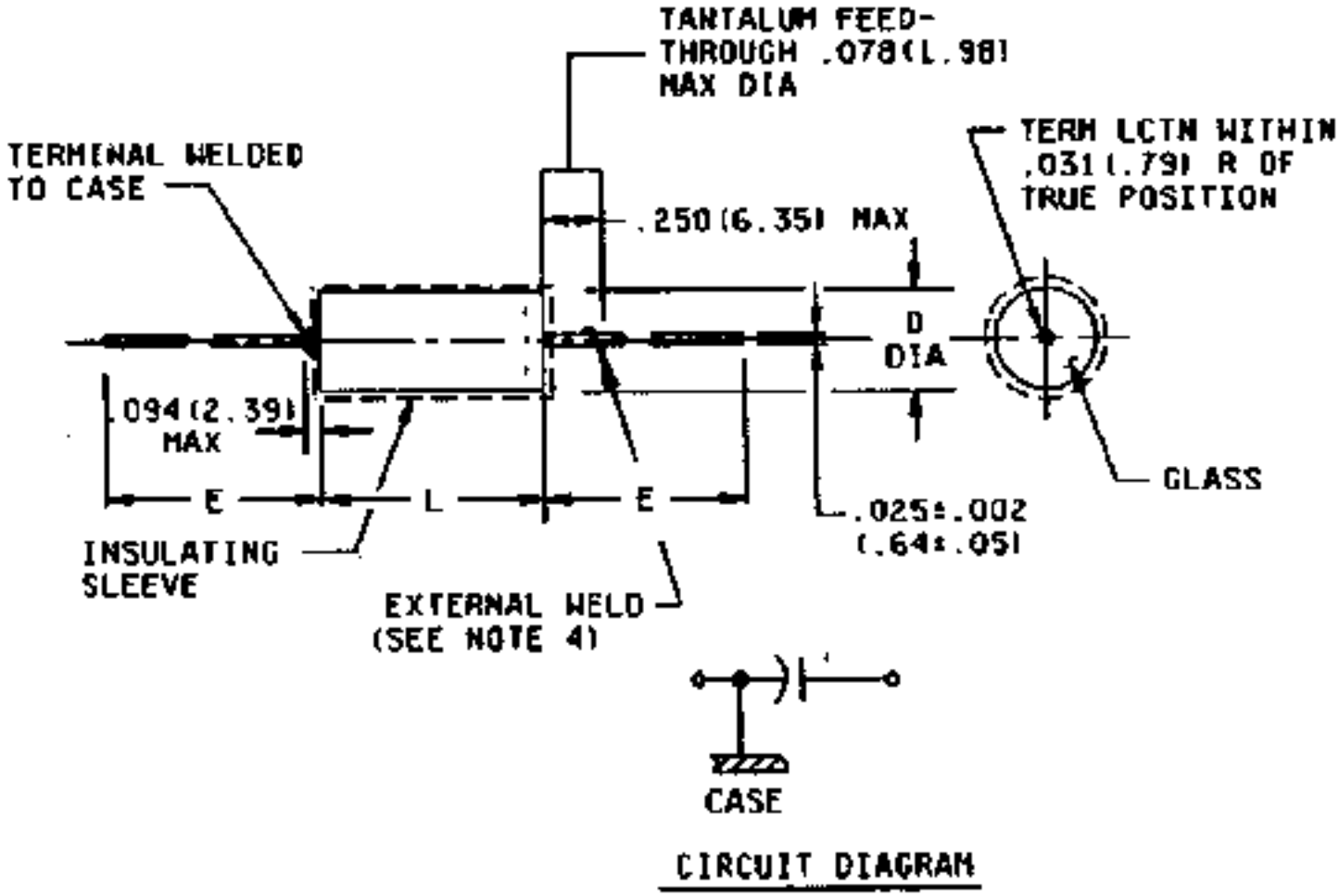

Case Size	L +0.031, -0.016	D (Basic Case) +/-0.016	D (Insulated Case) Max.	E +/-0.250
T1	0.453	0.188	0.219	1.500
T2	0.641	0.281	0.312	2.250
T3	0.766	0.375	0.406	2.250

T4	1.062	0.375	0.406	2.250

Notes:

1) Dimensions are in inches.

2) Metric equivalents are in parentheses.

3) Metric equivalents are given for information only.

4) The weld shall not be enclosed in the end seal.

CLR81 Wet Tantalum Slug Capacitors

	Cap.	Rated	Cap.	Case	Level 1	Level 2	
Part Number	Value (uF)	Voltage (V)	Tol (+/- %)	Size	(FRL)	(FRL)	Manufacturer
M39006/25-0177H	220	6	20	T1	R		MAL, TAN
M39006/25-0089H	220	6	20	T1		P	MAL, TAN
M39006/25-0178H	220	6	10	T1	R		MAL, TAN
M39006/25-0090H	220	6	10	T1		P	MAL, TAN
M39006/25-0179H	820	6	20	T2	R		MAL, TAN
M39006/25-0091H	820	6	20	T2		P	MAL, TAN
M39006/25-0180H	820	6	10	T2	R		MAL, TAN
M39006/25-0092H	820	6	10	T2		P	MAL, TAN
M39006/25-0181H	1500	6	20	T3	R		MAL, TAN
M39006/25-0093H	1500	6	20	T3		P	MAL, TAN
M39006/25-0182H	1500	6	10	T3	R		MAL, TAN
M39006/25-0094H	1500	6	10	T3		P	MAL, TAN
M39006/25-0183H	2200	6	20	T4	R		MAL, TAN
M39006/25-0095H	2200	6	20	T4		P	MAL, TAN
M39006/25-0184H	2200	6	10	T4	R		MAL, TAN
M39006/25-0096H	2200	6	10	T4		P	MAL, TAN
M39006/25-0185H	180	8	20	T1	R		MAL, TAN
M39006/25-0097H	180	8	20	T1		P	MAL, TAN
	Cap.	Rated	Cap.	Case	Level 1	Level 2	
Part Number	Value (uF)	Voltage (V)	Tol (+/- %)	Size	(FRL)	(FRL)	Manufacturer
M39006/25-0186H	180	8	10	T1	R		MAL, TAN
M39006/25-0098H	180	8	10	T1		P	MAL, TAN
M39006/25-0187H	680	8	20	T2	R		MAL, TAN
M39006/25-0099H	680	8	20	T2		P	MAL, TAN
M39006/25-0188H	680	8	10	T2	R		MAL, TAN
M39006/25-0100H	680	8	10	T2		P	MAL, TAN
M39006/25-0189H	1500	8	20	T3	R		MAL, TAN
M39006/25-0101H	1500	8	20	T3		P	MAL, TAN
M39006/25-0190H	1500	8	10	T3	R		MAL, TAN
M39006/25-0102H	1500	8	10	T3		P	MAL, TAN
M39006/25-0191H	1800	8	20	T4	R		MAL, TAN
M39006/25-0103H	1800	8	20	T4		P	MAL, TAN
M39006/25-0192H	1800	8	10	T4	R		MAL, TAN
M39006/25-0104H	1800	8	10	T4		P	MAL, TAN

M39006/25-0193H	150	10	20	T1	R		MAL, TAN
M39006/25-0105H	150	10	20	T1		P	MAL, TAN
M39006/25-0194H	150	10	10	T1	R		MAL, TAN
M39006/25-0106H	150	10	10	T1		P	MAL, TAN
	Cap.	Rated	Cap.	Case	Level 1	Level 2	
Part Number	Value (uF)	Voltage (V)	Tol (+/- %)	Size	(FRL)	(FRL)	Manufacturer
M39006/25-0195H	560	10	20	T2	R		MAL, TAN
M39006/25-0107H	560	10	20	T2		P	MAL, TAN
M39006/25-0196H	560	10	10	T2	R		MAL, TAN
M39006/25-0108H	560	10	10	T2		P	MAL, TAN
M39006/25-0197H	1200	10	20	T3	R		MAL, TAN
M39006/25-0109H	1200	10	20	T3		P	MAL, TAN
M39006/25-0198H	1200	10	10	T3	R		MAL, TAN
M39006/25-0110H	1200	10	10	T3		P	MAL, TAN
M39006/25-0199H	1500	10	20	T4	R		MAL, TAN
M39006/25-0111H	1500	10	20	T4		P	MAL, TAN
M39006/25-0200H	1500	10	10	T4	R		MAL, TAN
M39006/25-0112H	1500	10	10	T4		P	MAL, TAN
M39006/25-0201H	100	15	20	T1	R		MAL, TAN
M39006/25-0113H	100	15	20	T1		P	MAL, TAN
M39006/25-0202H	100	15	10	T1	R		MAL, TAN
M39006/25-0114H	100	15	10	T1		P	MAL, TAN
M39006/25-0203H	390	15	20	T2	R		MAL, TAN
M39006/25-0115H	390	15	20	T2		P	MAL, TAN
	Cap.	Rated	Cap.	Case	Level 1	Level 2	
Part Number	Value (uF)	Voltage (V)	Tol (+/- %)	Size	(FRL)	(FRL)	Manufacturer
M39006/25-0204H	390	15	10	T2	R		MAL, TAN
M39006/25-0116H	390	15	10	T2		P	MAL, TAN
M39006/25-0205H	820	15	20	T3	R		MAL, TAN
M39006/25-0117H	820	15	20	T3		P	MAL, TAN
M39006/25-0206H	820	15	10	T3	R		MAL, TAN
M39006/25-0118H	820	15	10	T3		P	MAL, TAN
M39006/25-0207H	1000	15	20	T4	R		MAL, TAN
M39006/25-0119H	1000	15	20	T4		P	MAL, TAN
M39006/25-0208H	1000	15	10	T4	R		MAL, TAN
M39006/25-0120H	1000	15	10	T4		P	MAL, TAN
M39006/25-0209H	68	25	20	T1	R		MAL, TAN
M39006/25-0121H	68	25	20	T1		P	MAL, TAN
M39006/25-0210H	68	25	10	T1	R		MAL, TAN
M39006/25-0122H	68	25	10	T1		P	MAL, TAN
M39006/25-0211H	270	25	20	T2	R		MAL, TAN
M39006/25-0123H	270	25	20	T2		P	MAL, TAN
M39006/25-0212H	270	25	10	T2	R		MAL, TAN
M39006/25-0124H	270	25	10	T2		P	MAL, TAN
	Cap.	Rated	Cap.	Case	Level 1	Level 2	
Part Number	Value (uF)	Voltage (V)	Tol (+/- %)	Size	(FRL)	(FRL)	Manufacturer
M39006/25-0213H	560	25	20	T3	R		MAL, TAN

M39006/25-0125H	560	25	20	T3		P	MAL, TAN
M39006/25-0214H	560	25	10	T3	R		MAL, TAN
M39006/25-0126H	560	25	10	T3		P	MAL, TAN
M39006/25-0215H	680	25	20	T4	R		MAL, TAN
M39006/25-0127H	680	25	20	T4		P	MAL, TAN
M39006/25-0216H	680	25	10	T4	R		MAL, TAN
M39006/25-0128H	680	25	10	T4		P	MAL, TAN
M39006/25-0217H	56	30	20	T1	R		MAL, TAN
M39006/25-0129H	56	30	20	T1		P	MAL, TAN
M39006/25-0218H	56	30	10	T1	R		MAL, TAN
M39006/25-0130H	56	30	10	T1		P	MAL, TAN
M39006/25-0219H	220	30	20	T2	R		MAL, TAN
M39006/25-0131H	220	30	20	T2		P	MAL, TAN
M39006/25-0220H	220	30	10	T2	R		MAL, TAN
M39006/25-0132H	220	30	10	T2		P	MAL, TAN
M39006/25-0221H	470	30	20	T3	R		MAL, TAN
M39006/25-0133H	470	30	20	T3		P	MAL, TAN
	Cap.	Rated	Cap.	Case	Level 1	Level 2	
Part Number	Value (uF)	Voltage (V)	Tol (+/- %)	Size	(FRL)	(FRL)	Manufacturer
M39006/25-0222H	470	30	10	T3	R		MAL, TAN
M39006/25-0134H	470	30	10	T3		P	MAL, TAN
M39006/25-0223H	560	30	20	T4	R		MAL, TAN
M39006/25-0135H	560	30	20	T4		P	MAL, TAN
M39006/25-0224H	560	30	10	T4	R		MAL, TAN
M39006/25-0136H	560	30	10	T4		P	MAL, TAN
M39006/25-0225H	33	50	20	T1	R		MAL, TAN
M39006/25-0137H	33	50	20	T1		P	MAL, TAN
M39006/25-0226H	33	50	10	T1	R		MAL, TAN
M39006/25-0138H	33	50	10	T1		P	MAL, TAN
M39006/25-0227H	120	50	20	T2	R		MAL, TAN
M39006/25-0139H	120	50	20	T2		P	MAL, TAN
M39006/25-0228H	120	50	10	T2	R		MAL, TAN
M39006/25-0140H	120	50	10	T2		P	MAL, TAN
M39006/25-0229H	270	50	20	T3	R		MAL, TAN
M39006/25-0141H	270	50	20	T3		P	MAL, TAN
M39006/25-0230H	270	50	10	T3	R		MAL, TAN
M39006/25-0142H	270	50	10	T3		P	MAL, TAN
	Cap.	Rated	Cap.	Case	Level 1	Level 2	
Part Number	Value (uF)	Voltage (V)	Tol (+/- %)	Size	(FRL)	(FRL)	Manufacturer
M39006/25-0231H	330	50	20	T4	R		MAL, TAN
M39006/25-0143H	330	50	20	T4		P	MAL, TAN
M39006/25-0232H	330	50	10	T4	R		MAL, TAN
M39006/25-0144H	330	50	10	T4		P	MAL, TAN
M39006/25-0233H	27	60	20	T1	R		MAL, TAN
M39006/25-0145H	27	60	20	T1		P	MAL, TAN
M39006/25-0234H	27	60	10	T1	R		MAL, TAN
M39006/25-0146H	27	60	10	T1		P	MAL, TAN

M39006/25-0235H	100	60	20	T2	R		MAL, TAN
M39006/25-0147H	100	60	20	T2		P	MAL, TAN
M39006/25-0236H	100	60	10	T2	R		MAL, TAN
M39006/25-0148H	100	60	10	T2		P	MAL, TAN
M39006/25-0237H	220	60	20	T3	R		MAL, TAN
M39006/25-0149H	220	60	20	T3		P	MAL, TAN
M39006/25-0238H	220	60	10	T3	R		MAL, TAN
M39006/25-0150H	220	60	10	T3		P	MAL, TAN
M39006/25-0239H	270	60	20	T4	R		MAL, TAN
M39006/25-0151H	270	60	20	T4		P	MAL, TAN
	Cap.	Rated	Cap.	Case	Level 1	Level 2	
Part Number	Value (uF)	Voltage (V)	Tol (+/- %)	Size	(FRL)	(FRL)	Manufacturer
M39006/25-0240H	270	60	10	T4	R		MAL, TAN
M39006/25-0152H	270	60	10	T4		P	MAL, TAN
M39006/25-0241H	22	75	20	T1	R		MAL, TAN
M39006/25-0153H	22	75	20	T1		P	MAL, TAN
M39006/25-0242H	22	75	10	T1	R		MAL, TAN
M39006/25-0154H	22	75	10	T1		P	MAL, TAN
M39006/25-0243H	82	75	20	T2	R		MAL, TAN
M39006/25-0155H	82	75	20	T2		P	MAL, TAN
M39006/25-0244H	82	75	10	T2	R		MAL, TAN
M39006/25-0156H	82	75	10	T2		P	MAL, TAN
M39006/25-0245H	180	75	20	T3	R		MAL, TAN
M39006/25-0157H	180	75	20	T3		P	MAL, TAN
M39006/25-0246H	180	75	10	T3	R		MAL, TAN
M39006/25-0158H	180	75	10	T3		P	MAL, TAN
M39006/25-0247H	220	75	20	T4	R		MAL, TAN
M39006/25-0159H	220	75	20	T4		P	MAL, TAN
M39006/25-0248H	220	75	10	T4	R		MAL, TAN
M39006/25-0160H	220	75	10	T4		P	MAL, TAN
	Cap.	Rated	Cap.	Case	Level 1	Level 2	
Part Number	Value (uF)	Voltage (V)	Tol (+/- %)	Size	(FRL)	(FRL)	Manufacturer
M39006/25-0249H	10	100	20	T1	R		MAL, TAN
M39006/25-0161H	10	100	20	T1		P	MAL, TAN
M39006/25-0250H	10	100	10	T1	R		MAL, TAN
M39006/25-0162H	10	100	10	T1		P	MAL, TAN
M39006/25-0251H	39	100	20	T2	R		MAL, TAN
M39006/25-0163H	39	100	20	T2		P	MAL, TAN
M39006/25-0252H	39	100	10	T2	R		MAL, TAN
M39006/25-0164H	39	100	10	T2		P	MAL, TAN
M39006/25-0253H	68	100	20	T3	R		MAL, TAN
M39006/25-0165H	68	100	20	T3		P	MAL, TAN
M39006/25-0254H	68	100	10	T3	R		MAL, TAN
M39006/25-0166H	68	100	10	T3		P	MAL, TAN
M39006/25-0255H	120	100	20	T4	R		MAL, TAN
M39006/25-0167H	120	100	20	T4		P	MAL, TAN
M39006/25-0256H	120	100	10	T4	R		MAL, TAN

M39006/25-0168H	120	100	10	T4		P	MAL, TAN

Style CLR81

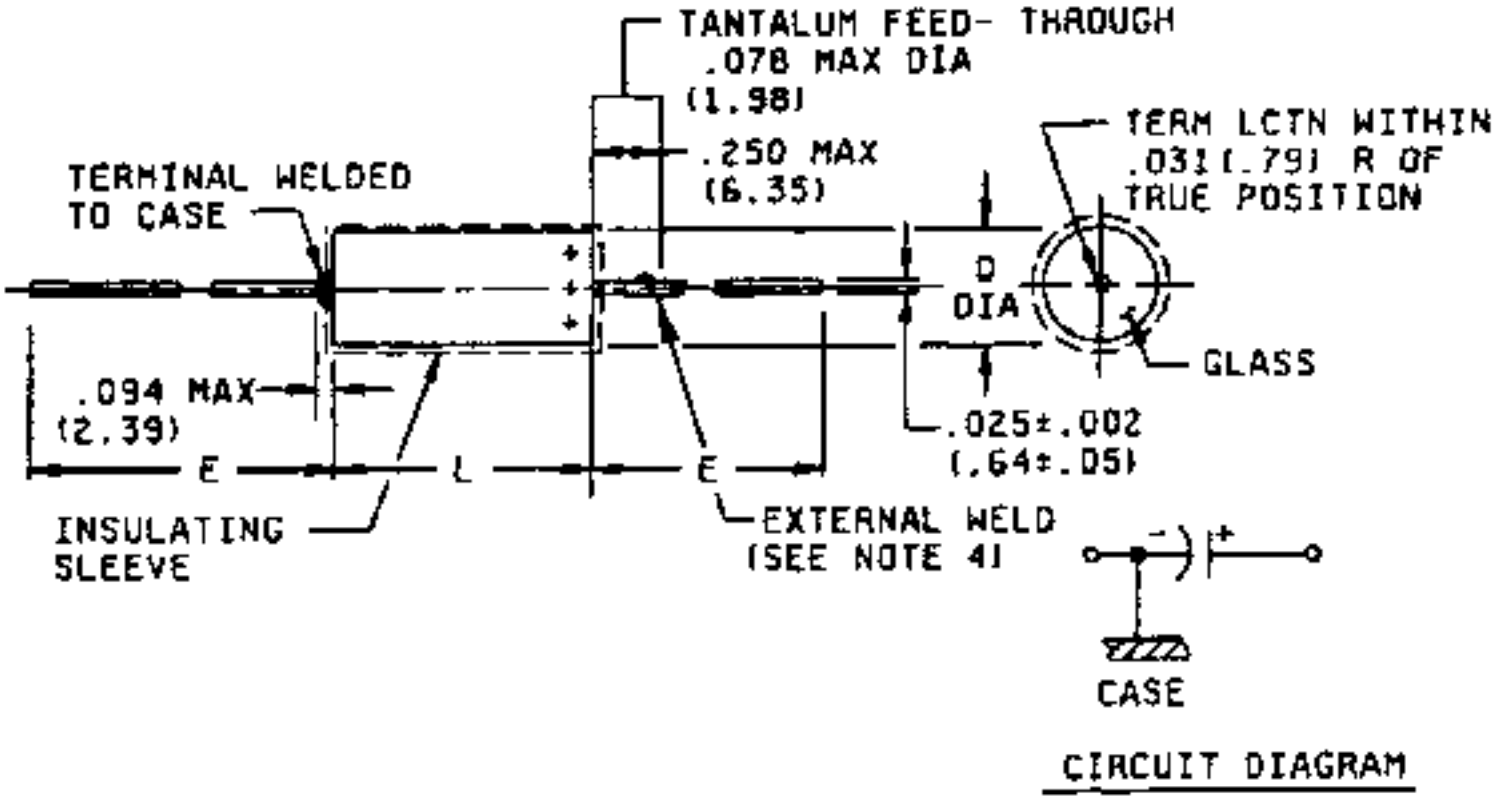

Case Size	L +0.031, -0.016	D (Basic Case) +/-0.016	D (Insulated Case) Max.	E +/-0.250
T1	0.453	0.188	0.219	1.500
T2	0.641	0.281	0.312	2.250
T3	0.766	0.375	0.406	2.250

T4	1.062	0.375	0.406	2.250

Notes:

1) Dimensions are in inches.

2) Metric equivalents are in parentheses.

3) Metric equivalents are given for information only.

4) The weld shall not be enclosed in the end seal.

CLR90 Wet Tantalum Slug Capacitors

	Cap.	Rated	Cap.	Case	Level 1	Level 2	
Part Number	Value (uF)	Voltage (V)	Tol (+/- %)	Size	(FRL)	(FRL)	Manufacturer
M39006/30-0441H	30	6	20	T1	R		MAL, TAN
M39006/30-0221H	30	6	20	T1		P	MAL, TAN
M39006/30-0442H	30	6	10	T1	R		MAL, TAN
M39006/30-0222H	30	6	10	T1		P	MAL, TAN
M39006/30-0443H	30	6	5	T1	R		MAL, TAN
M39006/30-0223H	30	6	5	T1		P	MAL, TAN
M39006/30-0444H	68	6	20	T1	R		MAL, TAN
M39006/30-0224H	68	6	20	T1		P	MAL, TAN
M39006/30-0445H	68	6	10	T1	R		MAL, TAN
M39006/30-0225H	68	6	10	T1		P	MAL, TAN
M39006/30-0446H	68	6	5	T1	R		MAL, TAN
M39006/30-0226H	68	6	5	T1		P	MAL, TAN
M39006/30-0447H	140	6	20	T2	R		MAL, TAN
M39006/30-0227H	140	6	20	T2		P	MAL, TAN
M39006/30-0448H	140	6	10	T2	R		MAL, TAN
M39006/30-0228H	140	6	10	T2		P	MAL, TAN
M39006/30-0449H	140	6	5	T2	R		MAL, TAN
M39006/30-0229H	140	6	5	T2		P	MAL, TAN
	Cap.	Rated	Cap.	Case	Level 1	Level 2	
Part Number	Value (uF)	Voltage (V)	Tol (+/- %)	Size	(FRL)	(FRL)	Manufacturer
M39006/30-0450H	270	6	20	T2	R		MAL, TAN
M39006/30-0230H	270	6	20	T2		P	MAL, TAN
M39006/30-0451H	270	6	10	T2	R		MAL, TAN
M39006/30-0231H	270	6	10	T2		P	MAL, TAN
M39006/30-0452H	270	6	5	T2	R		MAL, TAN
M39006/30-0232H	270	6	5	T2		P	MAL, TAN
M39006/30-0453H	330	6	20	T3	R		MAL, TAN
M39006/30-0233H	330	6	20	T3		P	MAL, TAN
M39006/30-0454H	330	6	10	T3	R		MAL, TAN
M39006/30-0234H	330	6	10	T3		P	MAL, TAN
M39006/30-0455H	330	6	5	T3	R		MAL, TAN
M39006/30-0235H	330	6	5	T3		P	MAL, TAN
M39006/30-0456H	560	6	20	T3	R		MAL, TAN
M39006/30-0236H	560	6	20	T3		P	MAL, TAN

M39006/30-0457H	560	6	10	T3	R		MAL, TAN
M39006/30-0237H	560	6	10	T3		P	MAL, TAN
M39006/30-0458H	560	6	5	T3	R		MAL, TAN
M39006/30-0238H	560	6	5	T3		P	MAL, TAN
	Cap.	Rated	Cap.	Case	Level 1	Level 2	
Part Number	Value (uF)	Voltage (V)	Tol (+/- %)	Size	(FRL)	(FRL)	Manufacturer
M39006/30-0459H	1200	6	20	T4	R		MAL, TAN
M39006/30-0239H	1200	6	20	T4		P	MAL, TAN
M39006/30-0460H	1200	6	10	T4	R		MAL, TAN
M39006/30-0240H	1200	6	10	T4		P	MAL, TAN
M39006/30-0461H	25	8	20	T1	R		MAL, TAN
M39006/30-0241H	25	8	20	T1		P	MAL, TAN
M39006/30-0462H	25	8	10	T1	R		MAL, TAN
M39006/30-0242H	25	8	10	T1		P	MAL, TAN
M39006/30-0463H	25	8	5	T1	R		MAL, TAN
M39006/30-0243H	25	8	5	T1		P	MAL, TAN
M39006/30-0464H	56	8	20	T1	R		MAL, TAN
M39006/30-0244H	56	8	20	T1		P	MAL, TAN
M39006/30-0465H	56	8	10	T1	R		MAL, TAN
M39006/30-0245H	56	8	10	T1		P	MAL, TAN
M39006/30-0466H	56	8	5	T1	R		MAL, TAN
M39006/30-0246H	56	8	5	T1		P	MAL, TAN
M39006/30-0467H	120	8	20	T2	R		MAL, TAN
M39006/30-0247H	120	8	20	T2		P	MAL, TAN
	Cap.	Rated	Cap.	Case	Level 1	Level 2	
Part Number	Value (uF)	Voltage (V)	Tol (+/- %)	Size	(FRL)	(FRL)	Manufacturer
M39006/30-0468H	120	8	10	T2	R		MAL, TAN
M39006/30-0248H	120	8	10	T2		P	MAL, TAN
M39006/30-0469H	120	8	5	T2	R		MAL, TAN
M39006/30-0249H	120	8	5	T2		P	MAL, TAN
M39006/30-0470H	220	8	20	T2	R		MAL, TAN
M39006/30-0250H	220	8	20	T2		P	MAL, TAN
M39006/30-0471H	220	8	10	T2	R		MAL, TAN
M39006/30-0251H	220	8	10	T2		P	MAL, TAN
M39006/30-0472H	220	8	5	T2	R		MAL, TAN
M39006/30-0252H	220	8	5	T2		P	MAL, TAN
M39006/30-0473H	290	8	20	T3	R		MAL, TAN
M39006/30-0253H	290	8	20	T3		P	MAL, TAN
M39006/30-0474H	290	8	10	T3	R		MAL, TAN
M39006/30-0254H	290	8	10	T3		P	MAL, TAN
M39006/30-0475H	290	8	5	T3	R		MAL, TAN
M39006/30-0255H	290	8	5	T3		P	MAL, TAN
M39006/30-0476H	430	8	20	T3	R		MAL, TAN
M39006/30-0256H	430	8	20	T3		P	MAL, TAN
	Cap.	Rated	Cap.	Case	Level 1	Level 2	
Part Number	Value (uF)	Voltage (V)	Tol (+/- %)	Size	(FRL)	(FRL)	Manufacturer
M39006/30-0477H	430	8	10	T3	R		MAL, TAN

M39006/30-0257H	430	8	10	T3		P	MAL, TAN
M39006/30-0478H	430	8	5	T3	R		MAL, TAN
M39006/30-0258H	430	8	5	T3		P	MAL, TAN
M39006/30-0479H	850	8	20	T4	R		MAL, TAN
M39006/30-0259H	850	8	20	T4		P	MAL, TAN
M39006/30-0480H	850	8	10	T4	R		MAL, TAN
M39006/30-0260H	850	8	10	T4		P	MAL, TAN
M39006/30-0481H	20	10	20	T1	R		MAL, TAN
M39006/30-0261H	20	10	20	T1		P	MAL, TAN
M39006/30-0482H	20	10	10	T1	R		MAL, TAN
M39006/30-0262H	20	10	10	T1		P	MAL, TAN
M39006/30-0483H	20	10	5	T1	R		MAL, TAN
M39006/30-0263H	20	10	5	T1		P	MAL, TAN
M39006/30-0484H	47	10	20	T1	R		MAL, TAN
M39006/30-0264H	47	10	20	T1		P	MAL, TAN
M39006/30-0485H	47	10	10	T1	R		MAL, TAN
M39006/30-0265H	47	10	10	T1		P	MAL, TAN
	Cap.	Rated	Cap.	Case	Level 1	Level 2	
Part Number	Value (uF)	Voltage (V)	Tol (+/- %)	Size	(FRL)	(FRL)	Manufacturer
M39006/30-0486H	47	10	5	T1	R		MAL, TAN
M39006/30-0266H	47	10	5	T1		P	MAL, TAN
M39006/30-0487H	100	10	20	T2	R		MAL, TAN
M39006/30-0267H	100	10	20	T2		P	MAL, TAN
M39006/30-0488H	100	10	10	T2	R		MAL, TAN
M39006/30-0268H	100	10	10	T2		P	MAL, TAN
M39006/30-0489H	100	10	5	T2	R		MAL, TAN
M39006/30-0269H	100	10	5	T2		P	MAL, TAN
M39006/30-0490H	180	10	20	T2	R		MAL, TAN
M39006/30-0270H	180	10	20	T2		P	MAL, TAN
M39006/30-0491H	180	10	10	T2	R		MAL, TAN
M39006/30-0271H	180	10	10	T2		P	MAL, TAN
M39006/30-0492H	180	10	5	T2	R		MAL, TAN
M39006/30-0272H	180	10	5	T2		P	MAL, TAN
M39006/30-0493H	250	10	20	T3	R		MAL, TAN
M39006/30-0273H	250	10	20	T3		P	MAL, TAN
M39006/30-0494H	250	10	10	T3	R		MAL, TAN
M39006/30-0274H	250	10	10	T3		P	MAL, TAN
	Cap.	Rated	Cap.	Case	Level 1	Level 2	
Part Number	Value (uF)	Voltage (V)	Tol (+/- %)	Size	(FRL)	(FRL)	Manufacturer
M39006/30-0495H	250	10	5	T3	R		MAL, TAN
M39006/30-0275H	250	10	5	T3		P	MAL, TAN
M39006/30-0496H	390	10	20	T3	R		MAL, TAN
M39006/30-0276H	390	10	20	T3		P	MAL, TAN
M39006/30-0497H	390	10	10	T3	R		MAL, TAN
M39006/30-0277H	390	10	10	T3		P	MAL, TAN
M39006/30-0498H	390	10	5	T3	R		MAL, TAN
M39006/30-0278H	390	10	5	T3		P	MAL, TAN

M39006/30-0499H	750	10	20	T4	R		MAL, TAN
M39006/30-0279H	750	10	20	T4		P	MAL, TAN
M39006/30-0500H	750	10	10	T4	R		MAL, TAN
M39006/30-0280H	750	10	10	T4		P	MAL, TAN
M39006/30-0501H	15	15	20	T1	R		MAL, TAN
M39006/30-0281H	15	15	20	T1		P	MAL, TAN
M39006/30-0502H	15	15	10	T1	R		MAL, TAN
M39006/30-0282H	15	15	10	T1		P	MAL, TAN
M39006/30-0503H	15	15	5	T1	R		MAL, TAN
M39006/30-0283H	15	15	5	T1		P	MAL, TAN
	Cap.	Rated	Cap.	Case	Level 1	Level 2	
Part Number	Value (uF)	Voltage (V)	Tol (+/- %)	Size	(FRL)	(FRL)	Manufacturer
M39006/30-0504H	33	15	20	T1	R		MAL, TAN
M39006/30-0284H	33	15	20	T1		P	MAL, TAN
M39006/30-0505H	33	15	10	T1	R		MAL, TAN
M39006/30-0285H	33	15	10	T1		P	MAL, TAN
M39006/30-0506H	33	15	5	T1	R		MAL, TAN
M39006/30-0286H	33	15	5	T1		P	MAL, TAN
M39006/30-0507H	70	15	20	T2	R		MAL, TAN
M39006/30-0287H	70	15	20	T2		P	MAL, TAN
M39006/30-0508H	70	15	10	T2	R		MAL, TAN
M39006/30-0288H	70	15	10	T2		P	MAL, TAN
M39006/30-0509H	70	15	5	T2	R		MAL, TAN
M39006/30-0289H	70	15	5	T2		P	MAL, TAN
M39006/30-0510H	120	15	20	T2	R		MAL, TAN
M39006/30-0290H	120	15	20	T2		P	MAL, TAN
M39006/30-0511H	120	15	10	T2	R		MAL, TAN
M39006/30-0291H	120	15	10	T2		P	MAL, TAN
M39006/30-0512H	120	15	5	T2	R		MAL, TAN
M39006/30-0292H	120	15	5	T2		P	MAL, TAN
	Cap.	Rated	Cap.	Case	Level 1	Level 2	
Part Number	Value (uF)	Voltage (V)	Tol (+/- %)	Size	(FRL)	(FRL)	Manufacturer
M39006/30-0513H	170	15	20	T3	R		MAL, TAN
M39006/30-0293H	170	15	20	T3		P	MAL, TAN
M39006/30-0514H	170	15	10	T3	R		MAL, TAN
M39006/30-0294H	170	15	10	T3		P	MAL, TAN
M39006/30-0515H	170	15	5	T3	R		MAL, TAN
M39006/30-0295H	170	15	5	T3		P	MAL, TAN
M39006/30-0516H	270	15	20	T3	R		MAL, TAN
M39006/30-0296H	270	15	20	T3		P	MAL, TAN
M39006/30-0517H	270	15	10	T3	R		MAL, TAN
M39006/30-0297H	270	15	10	T3		P	MAL, TAN
M39006/30-0518H	270	15	5	T3	R		MAL, TAN
M39006/30-0298H	270	15	5	T3		P	MAL, TAN
M39006/30-0519H	540	15	20	T4	R		MAL, TAN
M39006/30-0299H	540	15	20	T4		P	MAL, TAN
M39006/30-0520H	540	15	10	T4	R		MAL, TAN

M39006/30-0300H	540	15	10	T4		P	MAL, TAN
M39006/30-0541H	8	30	20	T1	R		MAL, TAN
M39006/30-0321H	8	30	20	T1		P	MAL, TAN
	Cap.	Rated	Cap.	Case	Level 1	Level 2	
Part Number	Value (uF)	Voltage (V)	Tol (+/- %)	Size	(FRL)	(FRL)	Manufacturer
M39006/30-0542H	8	30	10	T1	R		MAL, TAN
M39006/30-0322H	8	30	10	T1		P	MAL, TAN
M39006/30-0543H	8	30	5	T1	R		MAL, TAN
M39006/30-0323H	8	30	5	T1		P	MAL, TAN
M39006/30-0544H	15	30	20	T1	R		MAL, TAN
M39006/30-0324H	15	30	20	T1		P	MAL, TAN
M39006/30-0545H	15	30	10	T1	R		MAL, TAN
M39006/30-0325H	15	30	10	T1		P	MAL, TAN
M39006/30-0546H	15	30	5	T1	R		MAL, TAN
M39006/30-0326H	15	30	5	T1		P	MAL, TAN
M39006/30-0547H	40	30	20	T2	R		MAL, TAN
M39006/30-0327H	40	30	20	T2		P	MAL, TAN
M39006/30-0548H	40	30	10	T2	R		MAL, TAN
M39006/30-0328H	40	30	10	T2		P	MAL, TAN
M39006/30-0549H	40	30	5	T2	R		MAL, TAN
M39006/30-0329H	40	30	5	T2		P	MAL, TAN
M39006/30-0550H	68	30	20	T2	R		MAL, TAN
M39006/30-0330H	68	30	20	T2		P	MAL, TAN
	Cap.	Rated	Cap.	Case	Level 1	Level 2	
Part Number	Value (uF)	Voltage (V)	Tol (+/- %)	Size	(FRL)	(FRL)	Manufacturer
M39006/30-0551H	68	30	10	T2	R		MAL, TAN
M39006/30-0331H	68	30	10	T2		P	MAL, TAN
M39006/30-0552H	68	30	5	T2	R		MAL, TAN
M39006/30-0332H	68	30	5	T2		P	MAL, TAN
M39006/30-0553H	100	30	20	T3	R		MAL, TAN
M39006/30-0333H	100	30	20	T3		P	MAL, TAN
M39006/30-0554H	100	30	10	T3	R		MAL, TAN
M39006/30-0334H	100	30	10	T3		P	MAL, TAN
M39006/30-0555H	100	30	5	T3	R		MAL, TAN
M39006/30-0335H	100	30	5	T3		P	MAL, TAN
M39006/30-0556H	150	30	20	T3	R		MAL, TAN
M39006/30-0336H	150	30	20	T3		P	MAL, TAN
M39006/30-0557H	150	30	10	T3	R		MAL, TAN
M39006/30-0337H	150	30	10	T3		P	MAL, TAN
M39006/30-0558H	150	30	5	T3	R		MAL, TAN
M39006/30-0338H	150	30	5	T3		P	MAL, TAN
M39006/30-0559H	300	30	20	T4	R		MAL, TAN
M39006/30-0339H	300	30	20	T4		P	MAL, TAN
	Cap.	Rated	Cap.	Case	Level 1	Level 2	
Part Number	Value (uF)	Voltage (V)	Tol (+/- %)	Size	(FRL)	(FRL)	Manufacturer
M39006/30-0560H	300	30	10	T4	R		MAL, TAN
M39006/30-0340H	300	30	10	T4		P	MAL, TAN

M39006/30-0561H	5	50	20	T1	R		MAL, TAN
M39006/30-0341H	5	50	20	T1		P	MAL, TAN
M39006/30-0562H	5	50	10	T1	R		MAL, TAN
M39006/30-0342H	5	50	10	T1		P	MAL, TAN
M39006/30-0563H	5	50	5	T1	R		MAL, TAN
M39006/30-0343H	5	50	5	T1		P	MAL, TAN
M39006/30-0564H	10	50	20	T1	R		MAL, TAN
M39006/30-0344H	10	50	20	T1		P	MAL, TAN
M39006/30-0565H	10	50	10	T1	R		MAL, TAN
M39006/30-0345H	10	50	10	T1		P	MAL, TAN
M39006/30-0566H	10	50	5	T1	R		MAL, TAN
M39006/30-0346H	10	50	5	T1		P	MAL, TAN
M39006/30-0567H	25	50	20	T2	R		MAL, TAN
M39006/30-0347H	25	50	20	T2		P	MAL, TAN
M39006/30-0568H	25	50	10	T2	R		MAL, TAN
M39006/30-0348H	25	50	10	T2		P	MAL, TAN
	Cap.	Rated	Cap.	Case	Level 1	Level 2	
Part Number	Value (uF)	Voltage (V)	Tol (+/- %)	Size	(FRL)	(FRL)	Manufacturer
M39006/30-0569H	25	50	5	T2	R		MAL, TAN
M39006/30-0349H	25	50	5	T2		P	MAL, TAN
M39006/30-0570H	47	50	20	T2	R		MAL, TAN
M39006/30-0350H	47	50	20	T2		P	MAL, TAN
M39006/30-0571H	47	50	10	T2	R		MAL, TAN
M39006/30-0351H	47	50	10	T2		P	MAL, TAN
M39006/30-0572H	47	50	5	T2	R		MAL, TAN
M39006/30-0352H	47	50	5	T2		P	MAL, TAN
M39006/30-0573H	60	50	20	T3	R		MAL, TAN
M39006/30-0353H	60	50	20	T3		P	MAL, TAN
M39006/30-0574H	60	50	10	T3	R		MAL, TAN
M39006/30-0354H	60	50	10	T3		P	MAL, TAN
M39006/30-0575H	60	50	5	T3	R		MAL, TAN
M39006/30-0355H	60	50	5	T3		P	MAL, TAN
M39006/30-0576H	82	50	20	T3	R		MAL, TAN
M39006/30-0356H	82	50	20	T3		P	MAL, TAN
M39006/30-0577H	82	50	10	T3	R		MAL, TAN
M39006/30-0357H	82	50	10	T3		P	MAL, TAN
	Cap.	Rated	Cap.	Case	Level 1	Level 2	
Part Number	Value (uF)	Voltage (V)	Tol (+/- %)	Size	(FRL)	(FRL)	Manufacturer
M39006/30-0578H	82	50	5	T3	R		MAL, TAN
M39006/30-0358H	82	50	5	T3		P	MAL, TAN
M39006/30-0579H	160	50	20	T4	R		MAL, TAN
M39006/30-0359H	160	50	20	T4		P	MAL, TAN
M39006/30-0580H	160	50	10	T4	R		MAL, TAN
M39006/30-0360H	160	50	10	T4		P	MAL, TAN
M39006/30-0601H	3.5	75	20	T1	R		MAL, TAN
M39006/30-0381H	3.5	75	20	T1		P	MAL, TAN
M39006/30-0602H	3.5	75	10	T1	R		MAL, TAN

M39006/30-0382H	3.5	75	10	T1		P	MAL, TAN
M39006/30-0603H	3.5	75	5	T1	R		MAL, TAN
M39006/30-0383H	3.5	75	5	T1		P	MAL, TAN
M39006/30-0604H	6.8	75	20	T1	R		MAL, TAN
M39006/30-0384H	6.8	75	20	T1		P	MAL, TAN
M39006/30-0605H	6.8	75	10	T1	R		MAL, TAN
M39006/30-0385H	6.8	75	10	T1		P	MAL, TAN
M39006/30-0606H	6.8	75	5	T1	R		MAL, TAN
M39006/30-0386H	6.8	75	5	T1		P	MAL, TAN
	Cap.	Rated	Cap.	Case	Level 1	Level 2	
Part Number	Value (uF)	Voltage (V)	Tol (+/- %)	Size	(FRL)	(FRL)	Manufacturer
M39006/30-0607H	15	75	20	T2	R		MAL, TAN
M39006/30-0387H	15	75	20	T2		P	MAL, TAN
M39006/30-0608H	15	75	10	T2	R		MAL, TAN
M39006/30-0388H	15	75	10	T2		P	MAL, TAN
M39006/30-0609H	15	75	5	T2	R		MAL, TAN
M39006/30-0389H	15	75	5	T2		P	MAL, TAN
M39006/30-0610H	33	75	20	T2	R		MAL, TAN
M39006/30-0390H	33	75	20	T2		P	MAL, TAN
M39006/30-0611H	33	75	10	T2	R		MAL, TAN
M39006/30-0391H	33	75	10	T2		P	MAL, TAN
M39006/30-0612H	33	75	5	T2	R		MAL, TAN
M39006/30-0392H	33	75	5	T2		P	MAL, TAN
M39006/30-0613H	40	75	20	T3	R		MAL, TAN
M39006/30-0393H	40	75	20	T3		P	MAL, TAN
M39006/30-0614H	40	75	10	T3	R		MAL, TAN
M39006/30-0394H	40	75	10	T3		P	MAL, TAN
M39006/30-0615H	40	75	5	T3	R		MAL, TAN
M39006/30-0395H	40	75	5	T3		P	MAL, TAN
	Cap.	Rated	Cap.	Case	Level 1	Level 2	
Part Number	Value (uF)	Voltage (V)	Tol (+/- %)	Size	(FRL)	(FRL)	Manufacturer
M39006/30-0616H	56	75	20	T3	R		MAL, TAN
M39006/30-0396H	56	75	20	T3		P	MAL, TAN
M39006/30-0617H	56	75	10	T3	R		MAL, TAN
M39006/30-0397H	56	75	10	T3		P	MAL, TAN
M39006/30-0618H	56	75	5	T3	R		MAL, TAN
M39006/30-0398H	56	75	5	T3		P	MAL, TAN
M39006/30-0619H	110	75	20	T4	R		MAL, TAN
M39006/30-0399H	110	75	20	T4		P	MAL, TAN
M39006/30-0620H	110	75	10	T4	R		MAL, TAN
M39006/30-0400H	110	75	10	T4		P	MAL, TAN
M39006/30-0621H	2.5	100	20	T1	R		MAL, TAN
M39006/30-0401H	2.5	100	20	T1		P	MAL, TAN
M39006/30-0622H	2.5	100	10	T1	R		MAL, TAN
M39006/30-0402H	2.5	100	10	T1		P	MAL, TAN
M39006/30-0623H	2.5	100	5	T1	R		MAL, TAN
M39006/30-0403H	2.5	100	5	T1		P	MAL, TAN

M39006/30-0624H	4.7	100	20	T1	R		MAL, TAN
M39006/30-0404H	4.7	100	20	T1		P	MAL, TAN
	Cap.	Rated	Cap.	Case	Level 1	Level 2	
Part Number	Value (uF)	Voltage (V)	Tol (+/- %)	Size	(FRL)	(FRL)	Manufacturer
M39006/30-0625H	4.7	100	10	T1	R		MAL, TAN
M39006/30-0405H	4.7	100	10	T1		P	MAL, TAN
M39006/30-0626H	4.7	100	5	T1	R		MAL, TAN
M39006/30-0406H	4.7	100	5	T1		P	MAL, TAN
M39006/30-0627H	11	100	20	T2	R		MAL, TAN
M39006/30-0407H	11	100	20	T2		P	MAL, TAN
M39006/30-0628H	11	100	10	T2	R		MAL, TAN
M39006/30-0408H	11	100	10	T2		P	MAL, TAN
M39006/30-0629H	11	100	5	T2	R		MAL, TAN
M39006/30-0409H	11	100	5	T2		P	MAL, TAN
M39006/30-0630H	22	100	20	T2	R		MAL, TAN
M39006/30-0410H	22	100	20	T2		P	MAL, TAN
M39006/30-0631H	22	100	10	T2	R		MAL, TAN
M39006/30-0411H	22	100	10	T2		P	MAL, TAN
M39006/30-0632H	22	100	5	T2	R		MAL, TAN
M39006/30-0412H	22	100	5	T2		P	MAL, TAN
M39006/30-0633H	30	100	20	T3	R		MAL, TAN
M39006/30-0413H	30	100	20	T3		P	MAL, TAN
	Cap.	Rated	Cap.	Case	Level 1	Level 2	
Part Number	Value (uF)	Voltage (V)	Tol (+/- %)	Size	(FRL)	(FRL)	Manufacturer
M39006/30-0634H	30	100	10	T3	R		MAL, TAN
M39006/30-0414H	30	100	10	T3		P	MAL, TAN
M39006/30-0635H	30	100	5	T3	R		MAL, TAN
M39006/30-0415H	30	100	5	T3		P	MAL, TAN
M39006/30-0636H	43	100	20	T3	R		MAL, TAN
M39006/30-0416H	43	100	20	T3		P	MAL, TAN
M39006/30-0637H	43	100	10	T3	R		MAL, TAN
M39006/30-0417H	43	100	10	T3		P	MAL, TAN
M39006/30-0638H	43	100	5	T3	R		MAL, TAN
M39006/30-0418H	43	100	5	T3		P	MAL, TAN
M39006/30-0639H	86	100	20	T4	R		MAL, TAN
M39006/30-0419H	86	100	20	T4		P	MAL, TAN
M39006/30-0640H	86	100	10	T4	R		MAL, TAN
M39006/30-0420H	86	100	10	T4		P	MAL, TAN

Style CLR90

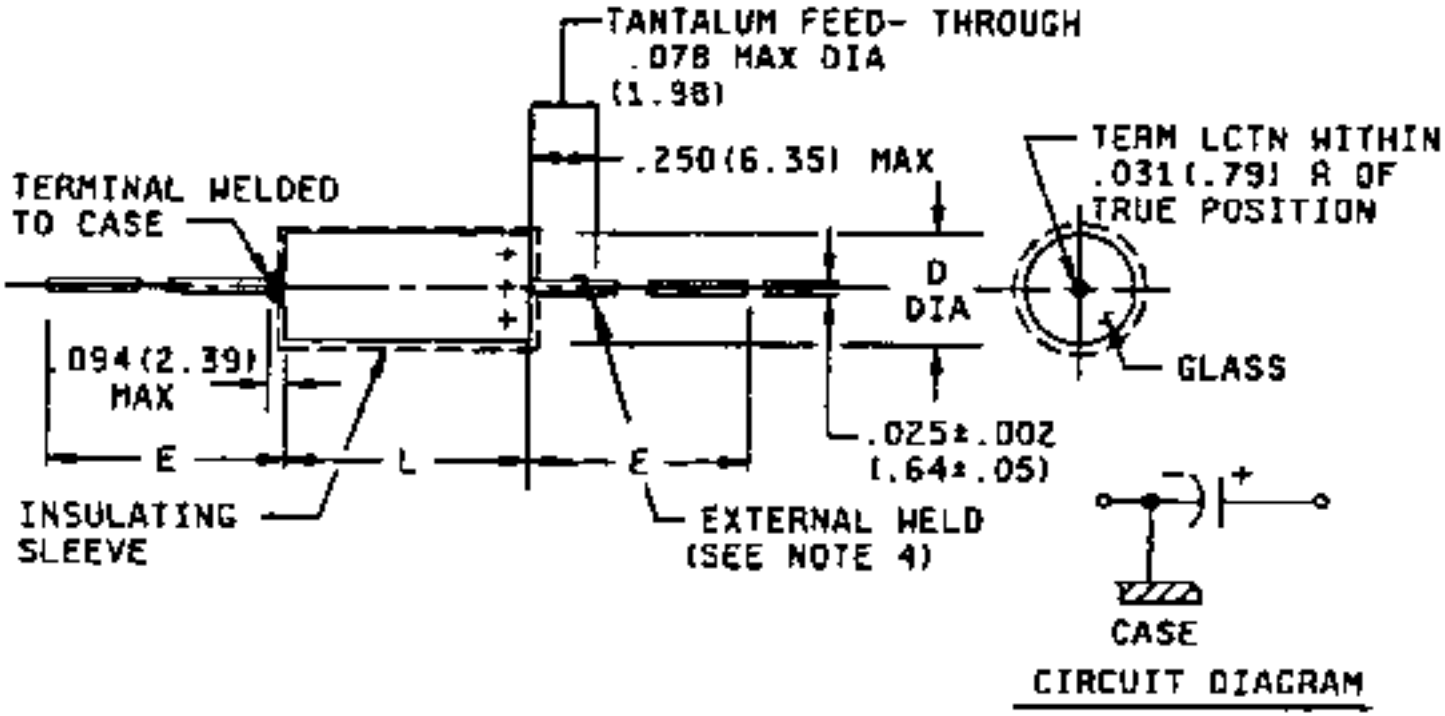

Case Size	L +0.031, -0.016	D (Basic Case) +/-0.016	D (Insulated Case) Max.	E +/-0.250
T1	0.453	0.188	0.219	1.500
T2	0.641	0.281	0.312	2.250
T3	0.766	0.375	0.406	2.250
T4	1.062	0.375	0.406	2.250

Notes:

1) Dimensions are in inches.

2) Metric equivalents are in parentheses.

3) Metric equivalents are given for information only.

4) The weld shall not be enclosed in the end seal.

CLR91 Wet Tantalum Slug Capacitors

	Cap.	Rated	Cap.	Case	Level 1	Level 2	
Part Number	Value (uF)	Voltage (V)	Tol (+/- %)	Size	(FRL)	(FRL)	Manufacturer
M39006/31-0177H	220	6	20	T1	R		MAL, TAN
M39006/31-0089H	220	6	20	T1		P	MAL, TAN
M39006/31-0178H	220	6	10	T1	R		MAL, TAN
M39006/31-0090H	220	6	10	T1		P	MAL, TAN
M39006/31-0179H	820	6	20	T2	R		MAL, TAN
M39006/31-0091H	820	6	20	T2		P	MAL, TAN
M39006/31-0180H	820	6	10	T2	R		MAL, TAN
M39006/31-0092H	820	6	10	T2		P	MAL, TAN
M39006/31-0181H	1500	6	20	T3	R		MAL, TAN
M39006/31-0093H	1500	6	20	T3		P	MAL, TAN
M39006/31-0182H	1500	6	10	T3	R		MAL, TAN
M39006/31-0094H	1500	6	10	T3		P	MAL, TAN
M39006/31-0183H	2200	6	20	T4	R		MAL, TAN
M39006/31-0095H	2200	6	20	T4		P	MAL, TAN
M39006/31-0184H	2200	6	10	T4	R		MAL, TAN
M39006/31-0096H	2200	6	10	T4		P	MAL, TAN
M39006/31-0185H	180	8	20	T1	R		MAL, TAN
M39006/31-0097H	180	8	20	T1		P	MAL, TAN
	Cap.	Rated	Cap.	Case	Level 1	Level 2	
Part Number	Value (uF)	Voltage (V)	Tol (+/- %)	Size	(FRL)	(FRL)	Manufacturer
M39006/31-0186H	180	8	10	T1	R		MAL, TAN
M39006/31-0098H	180	8	10	T1		P	MAL, TAN
M39006/31-0187H	680	8	20	T2	R		MAL, TAN
M39006/31-0099H	680	8	20	T2		P	MAL, TAN
M39006/31-0188H	680	8	10	T2	R		MAL, TAN
M39006/31-0100H	680	8	10	T2		P	MAL, TAN
M39006/31-0189H	1500	8	20	T3	R		MAL, TAN
M39006/31-0101H	1500	8	20	T3		P	MAL, TAN
M39006/31-0190H	1500	8	10	T3	R		MAL, TAN
M39006/31-0102H	1500	8	10	T3		P	MAL, TAN
M39006/31-0191H	1800	8	20	T4	R		MAL, TAN
M39006/31-0103H	1800	8	20	T4		P	MAL, TAN
M39006/31-0192H	1800	8	10	T4	R		MAL, TAN
M39006/31-0104H	1800	8	10	T4		P	MAL, TAN
M39006/31-0193H	150	10	20	T1	R		MAL, TAN
M39006/31-0105H	150	10	20	T1		P	MAL, TAN
M39006/31-0194H	150	10	10	T1	R		MAL, TAN
M39006/31-0106H	150	10	10	T1		P	MAL, TAN
	Cap.	Rated	Cap.	Case	Level 1	Level 2	

Part Number	Value (uF)	Voltage (V)	Tol (+/- %)	Size	(FRL)	(FRL)	Manufacturer
M39006/31-0195H	560	10	20	T2	R		MAL, TAN
M39006/31-0107H	560	10	20	T2		P	MAL, TAN
M39006/31-0196H	560	10	10	T2	R		MAL, TAN
M39006/31-0108H	560	10	10	T2		P	MAL, TAN
M39006/31-0197H	1200	10	20	T3	R		MAL, TAN
M39006/31-0109H	1200	10	20	T3		P	MAL, TAN
M39006/31-0198H	1200	10	10	T3	R		MAL, TAN
M39006/31-0110H	1200	10	10	T3		P	MAL, TAN
M39006/31-0199H	1500	10	20	T4	R		MAL, TAN
M39006/31-0111H	1500	10	20	T4		P	MAL, TAN
M39006/31-0200H	1500	10	10	T4	R		MAL, TAN
M39006/31-0112H	1500	10	10	T4		P	MAL, TAN
M39006/31-0201H	100	15	20	T1	R		MAL, TAN
M39006/31-0113H	100	15	20	T1		P	MAL, TAN
M39006/31-0202H	100	15	10	T1	R		MAL, TAN
M39006/31-0114H	100	15	10	T1		P	MAL, TAN
M39006/31-0203H	390	15	20	T2	R		MAL, TAN
M39006/31-0115H	390	15	20	T2		P	MAL, TAN
	Cap.	Rated	Cap.	Case	Level 1	Level 2	
Part Number	Value (uF)	Voltage (V)	Tol (+/- %)	Size	(FRL)	(FRL)	Manufacturer
M39006/31-0204H	390	15	10	T2	R		MAL, TAN
M39006/31-0116H	390	15	10	T2		P	MAL, TAN
M39006/31-0205H	820	15	20	T3	R		MAL, TAN
M39006/31-0117H	820	15	20	T3		P	MAL, TAN
M39006/31-0206H	820	15	10	T3	R		MAL, TAN
M39006/31-0118H	820	15	10	T3		P	MAL, TAN
M39006/31-0207H	1000	15	20	T4	R		MAL, TAN
M39006/31-0119H	1000	15	20	T4		P	MAL, TAN
M39006/31-0208H	1000	15	10	T4	R		MAL, TAN
M39006/31-0120H	1000	15	10	T4		P	MAL, TAN
M39006/31-0209H	68	25	20	T1	R		MAL, TAN
M39006/31-0121H	68	25	20	T1		P	MAL, TAN
M39006/31-0210H	68	25	10	T1	R		MAL, TAN
M39006/31-0122H	68	25	10	T1		P	MAL, TAN
M39006/31-0211H	270	25	20	T2	R		MAL, TAN
M39006/31-0123H	270	25	20	T2		P	MAL, TAN
M39006/31-0212H	270	25	10	T2	R		MAL, TAN
M39006/31-0124H	270	25	10	T2		P	MAL, TAN
	Cap.	Rated	Cap.	Case	Level 1	Level 2	
Part Number	Value (uF)	Voltage (V)	Tol (+/- %)	Size	(FRL)	(FRL)	Manufacturer
M39006/31-0213H	560	25	20	T3	R		MAL, TAN
M39006/31-0125H	560	25	20	T3		P	MAL, TAN
M39006/31-0214H	560	25	10	T3	R		MAL, TAN
M39006/31-0126H	560	25	10	T3		P	MAL, TAN
M39006/31-0215H	680	25	20	T4	R		MAL, TAN
M39006/31-0127H	680	25	20	T4		P	MAL, TAN

M39006/31-0216H	680	25	10	T4	R		MAL, TAN
M39006/31-0128H	680	25	10	T4		P	MAL, TAN
M39006/31-0217H	56	30	20	T1	R		MAL, TAN
M39006/31-0129H	56	30	20	T1		P	MAL, TAN
M39006/31-0218H	56	30	10	T1	R		MAL, TAN
M39006/31-0130H	56	30	10	T1		P	MAL, TAN
M39006/31-0219H	220	30	20	T2	R		MAL, TAN
M39006/31-0131H	220	30	20	T2		P	MAL, TAN
M39006/31-0220H	220	30	10	T2	R		MAL, TAN
M39006/31-0132H	220	30	10	T2		P	MAL, TAN
M39006/31-0221H	470	30	20	T3	R		MAL, TAN
M39006/31-0133H	470	30	20	T3		P	MAL, TAN
	Cap.	Rated	Cap.	Case	Level 1	Level 2	
Part Number	Value (uF)	Voltage (V)	Tol (+/- %)	Size	(FRL)	(FRL)	Manufacturer
M39006/31-0222H	470	30	10	T3	R		MAL, TAN
M39006/31-0134H	470	30	10	T3		P	MAL, TAN
M39006/31-0223H	560	30	20	T4	R		MAL, TAN
M39006/31-0135H	560	30	20	T4		P	MAL, TAN
M39006/31-0224H	560	30	10	T4	R		MAL, TAN
M39006/31-0136H	560	30	10	T4		P	MAL, TAN
M39006/31-0225H	33	50	20	T1	R		MAL, TAN
M39006/31-0137H	33	50	20	T1		P	MAL, TAN
M39006/31-0226H	33	50	10	T1	R		MAL, TAN
M39006/31-0138H	33	50	10	T1		P	MAL, TAN
M39006/31-0227H	120	50	20	T2	R		MAL, TAN
M39006/31-0139H	120	50	20	T2		P	MAL, TAN
M39006/31-0228H	120	50	10	T2	R		MAL, TAN
M39006/31-0140H	120	50	10	T2		P	MAL, TAN
M39006/31-0229H	270	50	20	T3	R		MAL, TAN
M39006/31-0141H	270	50	20	T3		P	MAL, TAN
M39006/31-0230H	270	50	10	T3	R		MAL, TAN
M39006/31-0142H	270	50	10	T3		P	MAL, TAN
	Cap.	Rated	Cap.	Case	Level 1	Level 2	
Part Number	Value (uF)	Voltage (V)	Tol (+/- %)	Size	(FRL)	(FRL)	Manufacturer
M39006/31-0231H	330	50	20	T4	R		MAL, TAN
M39006/31-0143H	330	50	20	T4		P	MAL, TAN
M39006/31-0232H	330	50	10	T4	R		MAL, TAN
M39006/31-0144H	330	50	10	T4		P	MAL, TAN
M39006/31-0233H	27	60	20	T1	R		MAL, TAN
M39006/31-0145H	27	60	20	T1		P	MAL, TAN
M39006/31-0234H	27	60	10	T1	R		MAL, TAN
M39006/31-0146H	27	60	10	T1		P	MAL, TAN
M39006/31-0235H	100	60	20	T2	R		MAL, TAN
M39006/31-0147H	100	60	20	T2		P	MAL, TAN
M39006/31-0236H	100	60	10	T2	R		MAL, TAN
M39006/31-0148H	100	60	10	T2		P	MAL, TAN
M39006/31-0237H	220	60	20	T3	R		MAL, TAN

M39006/31-0149H	220	60	20	T3		P	MAL, TAN
M39006/31-0238H	220	60	10	T3	R		MAL, TAN
M39006/31-0150H	220	60	10	T3		P	MAL, TAN
M39006/31-0239H	270	60	20	T4	R		MAL, TAN
M39006/31-0151H	270	60	20	T4		P	MAL, TAN
	Cap.	Rated	Cap.	Case	Level 1	Level 2	
Part Number	Value (uF)	Voltage (V)	Tol (+/- %)	Size	(FRL)	(FRL)	Manufacturer
M39006/31-0240H	270	60	10	T4	R		MAL, TAN
M39006/31-0152H	270	60	10	T4		P	MAL, TAN
M39006/31-0241H	22	75	20	T1	R		MAL, TAN
M39006/31-0153H	22	75	20	T1		P	MAL, TAN
M39006/31-0242H	22	75	10	T1	R		MAL, TAN
M39006/31-0154H	22	75	10	T1		P	MAL, TAN
M39006/31-0243H	82	75	20	T2	R		MAL, TAN
M39006/31-0155H	82	75	20	T2		P	MAL, TAN
M39006/31-0244H	82	75	10	T2	R		MAL, TAN
M39006/31-0156H	82	75	10	T2		P	MAL, TAN
M39006/31-0245H	180	75	20	T3	R		MAL, TAN
M39006/31-0157H	180	75	20	T3		P	MAL, TAN
M39006/31-0246H	180	75	10	T3	R		MAL, TAN
M39006/31-0158H	180	75	10	T3		P	MAL, TAN
M39006/31-0247H	220	75	20	T4	R		MAL, TAN
M39006/31-0159H	220	75	20	T4		P	MAL, TAN
M39006/31-0248H	220	75	10	T4	R		MAL, TAN
M39006/31-0160H	220	75	10	T4		P	MAL, TAN
	Cap.	Rated	Cap.	Case	Level 1	Level 2	
Part Number	Value (uF)	Voltage (V)	Tol (+/- %)	Size	(FRL)	(FRL)	Manufacturer
M39006/31-0249H	10	100	20	T1	R		MAL, TAN
M39006/31-0161H	10	100	20	T1		P	MAL, TAN
M39006/31-0250H	10	100	10	T1	R		MAL, TAN
M39006/31-0162H	10	100	10	T1		P	MAL, TAN
M39006/31-0251H	39	100	20	T2	R		MAL, TAN
M39006/31-0163H	39	100	20	T2		P	MAL, TAN
M39006/31-0252H	39	100	10	T2	R		MAL, TAN
M39006/31-0164H	39	100	10	T2		P	MAL, TAN
M39006/31-0253H	68	100	20	T3	R		MAL, TAN
M39006/31-0165H	68	100	20	T3		P	MAL, TAN
M39006/31-0254H	68	100	10	T3	R		MAL, TAN
M39006/31-0166H	68	100	10	T3		P	MAL, TAN
M39006/31-0255H	120	100	20	T4	R		MAL, TAN
M39006/31-0167H	120	100	20	T4		P	MAL, TAN
M39006/31-0256H	120	100	10	T4	R		MAL, TAN
M39006/31-0168H	120	100	10	T4		P	MAL, TAN

Style CLR91

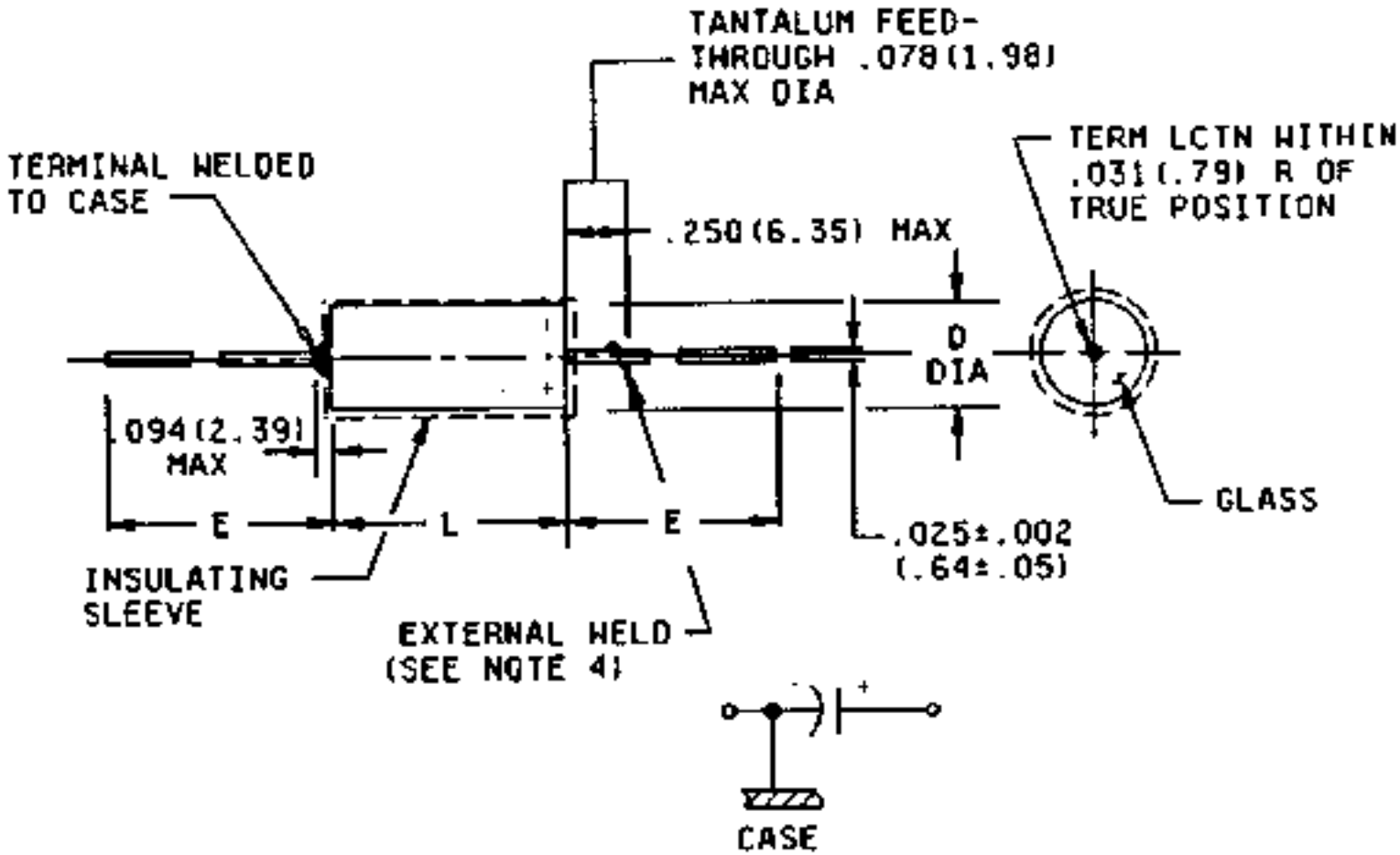

CIRCUIT DIAGRAM

Case Size	L +0.031, -0.016	D (Basic Case) +/-0.016	D (Insulated Case) Max.	E +/-0.250
T1	0.453	0.188	0.219	1.500

T2	0.641	0.281	0.312	2.250
T3	0.766	0.375	0.406	2.250
T4	1.062	0.375	0.406	2.250

Notes:

1) Dimensions are in inches.

2) Metric equivalents are in parentheses.

3) Metric equivalents are given for information only.

4) The weld shall not be enclosed in the end seal.

Go to -

NEPP

|

NPSL

|

Capacitors

MIL-PRF-55365, CAPACITORS

Chip, Fixed, Tantalum, Established Reliability

CWR Styles

Part Number/Ordering Explanation

Important! Application Notes

Revision History for MIL-PRF-55365 Listing in the NPSL

Last Revision: 03/11/03

Click on the link below to see the associated parts selection listing:

Style	Detail Specification	Description (Click Link Below for Dimensions)
CWR06	MIL-PRF-55365/4	Conformally Coated Tantalum Chips 2.2 uF to 100 uF (4 V) 1.5 uF to 68 uF (6 V) 1.0 uF to 47 uF (10 V) 0.68 uF to 33 uF (15 V) 0.47 uF to 22 uF (20 V) 0.33 uF to 15 uF (25 V) 0.22 u
CWR09	MIL-PRF-55365/4	Molded Tantalum Chips 2.2 uF to 100 uF (4 V) 1.5 uF to 68 uF (6 V) 1.0 uF to 47 uF (10 V) 0.68 uF to 33 uF (15 V) 0.47 uF to 22 uF (20 V) 0.33 uF to 15 uF (25 V) 0.22 uF to 6.8 uF
CWR11	MIL-PRF-55365/8	Molded Tantalum Chips (Metric) 2.2 uF to 100 uF (4 V) 1.5 uF to 68 uF (6 V) 1.0 uF to 47 uF (10 V) 0.68 uF to 33 uF (15 V) 0.47 uF to 22 uF (20 V) 0.33 uF to 15 uF (25 V) 0.1 uF to

APPLICATION NOTES FOR MIL-PRF-55365

1) Solid tantalum capacitors are subject to inrush current failures. Effective series resistance for MIL-PRF-55365 capacitors should be at least 0.3 ohms/volt or 1 ohm whichever is greater, for Level 1 applications and at least 0.1 ohms/volt or 1 ohm whichever is greater, for Level 2 applications. MIL-PRF-55365 capacitors should not be used in power supply filters.

2) For Level 1 applications MIL-PRF-55365 capacitors should be subjected to either option "B" or "C" surge current testing (at -55deg.C and +85deg.C) in accordance with MIL-PRF-55365 and associated slash sheet. For Level 2 applications MIL-PRF-55365 capacitors should be subjected to option "A" surge current testing (at +25deg.C) as specified by MIL-PRF-55365 and associated slash sheet. For Level 3 applications MIL-PRF-55365 capacitors used in single point failure or mission critical locations should be subjected to option "A" surge current testing (at +25deg.C). NOTE: MIL-PRF-55365 and slash sheets provide the procuring activity the option to order capacitors with any of 3 different surge current tests performed on 100% of the capacitors as part of the manufacturer's outgoing conformance inspection. See the MIL spec or the

part number ordering explanation

table for details.

3)

These tantalum capacitors are polar devices that are sensitive to reverse bias voltage.

Prolonged exposure to high levels of reverse voltage can produce very high leakage currents and short circuits. Short circuited tantalum capacitors can ignite and/or produce excessive heat resulting in extreme damage to circuit boards. Reverse bias application of these parts should be avoided. M

IL-PRF-55365 offers no guidance on the reverse bias performance of these capacitors. Capacitor manufacturer guidelines are generally very conservative urging against any prolonged exposure to reverse bias. Some limited experimental data exists that suggests some capacitors may be able to indefinitely withstand room temperature reverse voltages on the order of 15 to 25% of rated voltage. However, all of the factors affecting the reverse bias behavior (including size and rating of the capacitor, effects of circuit current limiting and ambient temperature) have not been studied. Refer to NEPAG Lesson Learned Bulletin

NEPAG-LLB-2001-002

and NEPAG Study Report "

Reverse Bias Behavior of Surface Mount Solid Tantalum Capacitors"

for further details.

4)

Users are urged to carefully confirm the proper orientation of all tantalum capacitors after installation. The convention for polarity markings is often a source of potential confusion.

"Chip" tantalum capacitor styles are prone to being installed improperly because they may be very small and the polarity identifier can be difficult to see.

Polarity idenitifcation for CWR06 capacitors may be particularly difficult to see. Polarity for these devices is determined by a small protrusion of the anode riser wire from the anode ("+") termination end cap.

Historically, reverse polarity failures have been observed that resulted from:

Incorrect initial installation (part installed backwards)

Incorrect installation during rework (original part installed correctly, but replacement part put in backwards)

Correct circuit design, but incorrect artwork on the printed wiring board (part installed correctly according to the artwork, but actually in backwards)

Incorrect circuit design (printed wiring board artwork correct per circuit layout, but design error resulted in part in backwards)

Refer to NEPAG Lesson Learned Bulletin

NEPAG-LLB-2001-002

for further details

Revision History for MIL-PRF-55365 Listing in the NPSL

03/11/03	Added application Note 4 to remind about potential for putting these capacitors in backwards by mistake
04/29/02	Added application note warning about reverse bias behavior of these capacitors. Added Surge Current Option "C" to the tables Added Weibull "D" characteristic as Level 1 part selection (where av
03/02/98	Added dimensional drawings to this section.
12/01/97	Made changes indicating the specification conversion to a performance specification (MIL-PRF-55365 instead of MIL-C-55365).
05/01/97	Initial Release of MIL-C-55365 Section in the NPSL

Part Number Ordering Information, example and explanation:

CWR11CB225JBA where,

CWR	11	C	B
Style (Fixed, tantalum, established reliability, chip capacitors conforming to MIL-PRF-55365)	Shape, Encapsulation and Dimensions of the capacitor	Rated Voltage, Derated Voltage and Surge Voltage	Terminati

Part number ordering options are developed using the following criteria:

Style	Detail Specification
CWR06 (Conformally Coated)	MIL-PRF-55365/4
CWR09 (Molded Chip)	MIL-PRF-55365/4
CWR11 (Molded Chip)	MIL-PRF-55365/8

Voltage

Symbol	Rated @ 85deg.C	Derated @ 125deg.C	Surge (+85deg.C)
C	4	2.7	5.0
D	6	4.0	8.0
F	10	7.0	13.0
H	15	10.0	20.0
J	20	13.0	26.0
K	25	17.0	32.0
M	35	23.0	46.0
N	50	33.0	65.0

Termination Finish
B = Gold (50 microinch min.)
C = Hot Solder Dipped (60 microinch min.)
H = Solder Plated (100 microinch min.)
K = Solder Fused (60 microinch min.)

Capacitance Tolerance
J = +/-5 %
K = +/-10 %
M = +/-20 %

Failure Rate Levels
B = 0.1%/1000 hours (Level 2)
C = 0.01%/1000 hours (Level 1)
D = 0.001%/1000 hours (Level 1)

Optional Surge Current Testing

			For Weibull Graded Parts	For Exponential Graded Parts
Option Letter	Test Temperatures	Testing done BEFORE Weibull Grading	Testing done AFTER Weibull Grading	Testing done AFTER Voltage Aging

-- (Blank)	No Surge Current Testing	No Surge Current Testing	No Surge Current Testing	No Surge Current Testing
A	25deg.C +/- 5deg.C	N/A	YES	YES
B	-55deg.C and +85deg.C	N/A	YES	YES
C	-55deg.C and +85deg.C	YES	N/A	N/A

Capacitor Values:

Capacitance values in picofarads (pF) are contained in the following listing. When ordering, the first two digits represent significant figures and the last digit specifies the number of zeroes to follow. For Example 104 indicates 100,000 pF (0.1 uF) and 106 indicates 10,000,000 pF (10 uF).

CWR06 Tantalum Chip Capacitors

(Click Here for Dimensional Drawing)

	Cap.	Rated	Case	Termination	Cap.	Level 1	Level 2	Surge	
Part Number	Value (uF)	Voltage (V)	Size	Finish (@)	Tol. (+/-%)	(FRL) (#)	(FRL) (#)	Current (*) (Optional)	Manufacturer
CWR06C@225%#*	2.2	4	A	B, C, H	J, K, M	C	B	A, B, C, Blank	SPR
CWR06C@475%#*	4.7	4	B	B, C, H	J, K, M	C	B	A, B, C, Blank	SPR
CWR06C@685%#*	6.8	4	C	B, C, H	J, K, M	C	B	A, B, C, Blank	SPR
CWR06C@106%#*	10	4	D	B, C, H	J, K, M	C	B	A, B, C, Blank	SPR
CWR06C@156%#*	15	4	E	B, C, H	J, K, M	C	B	A, B, C, Blank	SPR
CWR06C@336%#*	33	4	F	B, C, H	J, K, M	C	B	A, B, C, Blank	SPR
CWR06C@686%#*	68	4	G	B, C, H	J, K, M	C	B	A, B, C, Blank	SPR
CWR06C@107%#*	100	4	H	B, C, H	J, K, M	C	B	A, B, C, Blank	SPR
CWR06D@155%#*	1.5	6	A	B, C, H	J, K, M	C	B	A, B, C, Blank	SPR
	Cap.	Rated	Case	Termination	Cap.	Level 1	Level 2	Surge	
Part Number	Value (uF)	Voltage (V)	Size	Finish (@)	Tol. (+/-%)	(FRL) (#)	(FRL) (#)	Current (*) (Optional)	Manufacturer
CWR06D@335%#*	3.3	6	B	B, C, H	J, K, M	C	B	A, B, C, Blank	SPR
CWR06D@475%#*	4.7	6	C	B, C, H	J, K, M	C	B	A, B, C, Blank	SPR
CWR06D@685%#*	6.8	6	D	B, C, H	J, K, M	C	B	A, B, C, Blank	SPR
CWR06D@106%#*	10	6	E	B, C, H	J, K, M	C	B	A, B, C, Blank	SPR
CWR06D@226%#*	22	6	F	B, C, H	J, K, M	C	B	A, B, C, Blank	SPR
CWR06D@476%#*	47	6	G	B, C, H	J, K, M	C	B	A, B, C, Blank	SPR
CWR06D@686%#*	68	6	H	B, C, H	J, K, M	C	B	A, B, C, Blank	SPR
CWR06F@105%#*	1.0	10	A	B, C, H	J, K, M	C	B	A, B, C, Blank	SPR
CWR06F@225%#*	2.2	10	B	B, C, H	J, K, M	C	B	A, B, C, Blank	SPR
	Cap.	Rated	Case	Termination	Cap.	Level 1	Level 2	Surge	
Part Number	Value (uF)	Voltage (V)	Size	Finish (@)	Tol. (+/-%)	(FRL) (#)	(FRL) (#)	Current (*) (Optional)	Manufacturer
CWR06F@335%#*	3.3	10	C	B, C, H	J, K, M	C	B	A, B, C, Blank	SPR
CWR06F@475%#*	4.7	10	D	B, C, H	J, K, M	C	B	A, B, C, Blank	SPR
CWR06F@685%#*	6.8	10	E	B, C, H	J, K, M	C	B	A, B, C, Blank	SPR
CWR06F@156%#*	15	10	F	B, C, H	J, K, M	C	B	A, B, C, Blank	SPR
CWR06F@336%#*	33	10	G	B, C, H	J, K, M	C	B	A, B, C, Blank	SPR
CWR06F@476%#*	47	10	H	B, C, H	J, K, M	C	B	A, B, C, Blank	SPR
CWR06H@684%#*	0.68	15	A	B, C, H	J, K, M	C	B	A, B, C, Blank	SPR
CWR06H@155%#*	1.5	15	B	B, C, H	J, K, M	C	B	A, B, C, Blank	SPR
CWR06H@225%#*	2.2	15	C	B, C, H	J, K, M	C	B	A, B, C, Blank	SPR
	Cap.	Rated	Case	Termination	Cap.	Level 1	Level 2	Surge	

Part Number	Value (uF)	Voltage (V)	Size	Finish (@)	Tol. (+/-%)	(FRL) (#)	(FRL) (#)	Current (*) (Optional)	Manufacturer
CWR06H@335%#*	3.3	15	D	B, C, H	J, K, M	C	B	A, B, C, Blank	SPR
CWR06H@475%#*	4.7	15	E	B, C, H	J, K, M	C	B	A, B, C, Blank	SPR
CWR06H@106%#*	10	15	F	B, C, H	J, K, M	C	B	A, B, C, Blank	SPR
CWR06H@226%#*	22	15	G	B, C, H	J, K, M	C	B	A, B, C, Blank	SPR
CWR06H@336%#*	33	15	H	B, C, H	J, K, M	C	B	A, B, C, Blank	SPR
CWR06J@474%#*	0.47	20	A	B, C, H	J, K, M	C	B	A, B, C, Blank	SPR
CWR06J@684%#*	0.68	20	B	B, C, H	J, K, M	C	B	A, B, C, Blank	SPR
CWR06J@105%#*	1.0	20	B	B, C, H	J, K, M	C	B	A, B, C, Blank	SPR
CWR06J@155%#*	1.5	20	C	B, C, H	J, K, M	C	B	A, B, C, Blank	SPR
	Cap.	Rated	Case	Termination	Cap.	Level 1	Level 2	Surge	
Part Number	Value (uF)	Voltage (V)	Size	Finish (@)	Tol. (+/-%)	(FRL) (#)	(FRL) (#)	Current (*) (Optional)	Manufacturer
CWR06J@225%#*	2.2	20	D	B, C, H	J, K, M	C	B	A, B, C, Blank	SPR
CWR06J@335%#*	3.3	20	E	B, C, H	J, K, M	C	B	A, B, C, Blank	SPR
CWR06J@685%#*	6.8	20	F	B, C, H	J, K, M	C	B	A, B, C, Blank	SPR
CWR06J@156%#*	15	20	G	B, C, H	J, K, M	C	B	A, B, C, Blank	SPR
CWR06J@226%#*	22	20	H	B, C, H	J, K, M	C	B	A, B, C, Blank	SPR
CWR06K@334%#*	0.33	25	A	B, C, H	J, K, M	C	B	A, B, C, Blank	SPR
CWR06K@684%#*	0.68	25	B	B, C, H	J, K, M	C	B	A, B, C, Blank	SPR
CWR06K@105%#*	1.0	25	C	B, C, H	J, K, M	C	B	A, B, C, Blank	SPR
CWR06K@155%#*	1.5	25	D	B, C, H	J, K, M	C	B	A, B, C, Blank	SPR
	Cap.	Rated	Case	Termination	Cap.	Level 1	Level 2	Surge	
Part Number	Value (uF)	Voltage (V)	Size	Finish (@)	Tol. (+/-%)	(FRL) (#)	(FRL) (#)	Current (*) (Optional)	Manufacturer
CWR06K@225%#*	2.2	25	E	B, C, H	J, K, M	C	B	A, B, C, Blank	SPR
CWR06K@475%#*	4.7	25	F	B, C, H	J, K, M	C	B	A, B, C, Blank	SPR
CWR06K@685%#*	6.8	25	G	B, C, H	J, K, M	C	B	A, B, C, Blank	SPR
CWR06K@106%#*	10	25	G	B, C, H	J, K, M	C	B	A, B, C, Blank	SPR
CWR06K@156%#*	15	25	H	B, C, H	J, K, M	C	B	A, B, C, Blank	SPR
CWR06M@224%#*	0.22	35	A	B, C, H	J, K, M	C	B	A, B, C, Blank	SPR
CWR06M@474%#*	0.47	35	B	B, C, H	J, K, M	C	B	A, B, C, Blank	SPR
CWR06M@684%#*	0.68	35	C	B, C, H	J, K, M	C	B	A, B, C, Blank	SPR
CWR06M@105%#*	1.0	35	D	B, C, H	J, K, M	C	B	A, B, C, Blank	SPR
	Cap.	Rated	Case	Termination	Cap.	Level 1	Level 2	Surge	
Part Number	Value (uF)	Voltage (V)	Size	Finish (@)	Tol. (+/-%)	(FRL) (#)	(FRL) (#)	Current (*) (Optional)	Manufacturer
CWR06M@155%#*	1.5	35	E	B, C, H	J, K, M	C	B	A, B, C, Blank	SPR
CWR06M@335%#*	3.3	35	F	B, C, H	J, K, M	C	B	A, B, C, Blank	SPR
CWR06M@475%#*	4.7	35	G	B, C, H	J, K, M	C	B	A, B, C, Blank	SPR
CWR06M@685%#*	6.8	35	H	B, C, H	J, K, M	C	B	A, B, C, Blank	SPR
CWR06N@104%#*	0.10	50	A	B, C, H	J, K, M	C	B	A, B, C, Blank	SPR
CWR06N@154%#*	0.15	50	A	B, C, H	J, K, M	C	B	A, B, C, Blank	SPR
CWR06N@224%#*	0.22	50	B	B, C, H	J, K, M	C	B	A, B, C, Blank	SPR
CWR06N@334%#*	0.33	50	B	B, C, H	J, K, M	C	B	A, B, C, Blank	SPR
CWR06N@474%#*	0.47	50	C	B, C, H	J, K, M	C	B	A, B, C, Blank	SPR
	Cap.	Rated	Case	Termination	Cap.	Level 1	Level 2	Surge	
Part Number	Value (uF)	Voltage (V)	Size	Finish (@)	Tol. (+/-%)	(FRL) (#)	(FRL) (#)	Current (*) (Optional)	Manufacturer
CWR06N@684%#*	0.68	50	D	B, C, H	J, K, M	C	B	A, B, C, Blank	SPR
CWR06N@105%#*	1.0	50	E	B, C, H	J, K, M	C	B	A, B, C, Blank	SPR

CWR06N@155%#*	1.5	50	F	B, C, H	J, K, M	C	B	A, B, C, Blank	SPR
CWR06N@225%#*	2.2	50	F	B, C, H	J, K, M	C	B	A, B, C, Blank	SPR
CWR06N@335%#*	3.3	50	G	B, C, H	J, K, M	C	B	A, B, C, Blank	SPR
CWR06N@475%#*	4.7	50	H	B, C, H	J, K, M	C	B	A, B, C, Blank	SPR
	Cap.	Rated	Case	Termination	Cap.	Level 1	Level 2	Surge	
Part Number	Value (uF)	Voltage (V)	Size	Finish (@)	Tol. (+/-%)	(FRL) (#)	(FRL) (#)	Current (*) (Optional)	Manufacturer

CWR06 Style

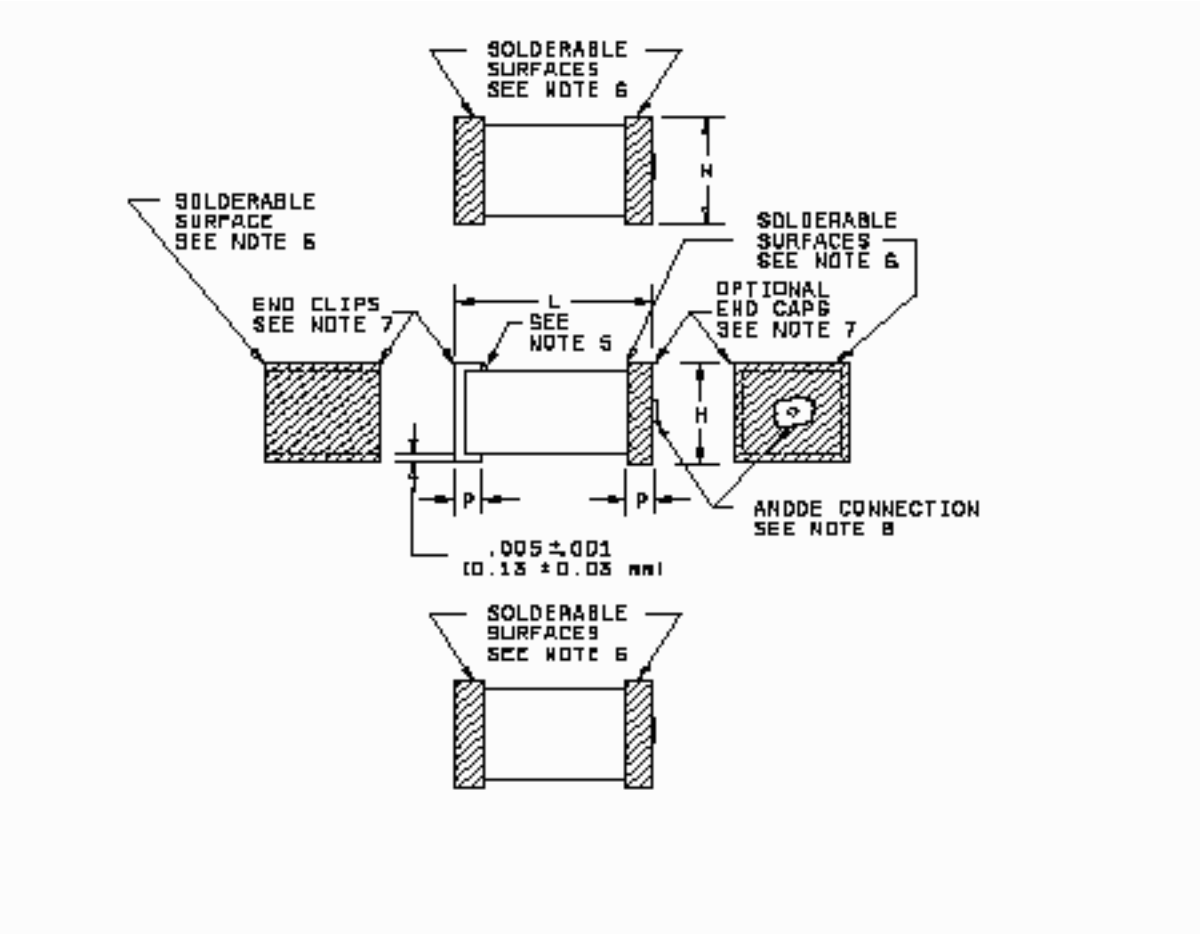

Physical Dimensions Table

Case Size	L	W	H	P
	+/-0.015 (0.38)	+/-0.015 (0.38)	+/-0.015 (0.38)	+/-0.005 (0.13)
A	0.100 (2.54)	0.050 (1.27)	0.050 (1.27)	0.030 (0.76)
B	0.150 (3.81)	0.050 (1.27)	0.050 (1.27)	0.030 (0.76)
C	0.200 (5.08)	0.050 (1.27)	0.050 (1.27)	0.030 (0.76)
D	0.150 (3.81)	0.100 (2.54)	0.050 (1.27)	0.030 (0.76)
E	0.200 (5.08)	0.100 (2.54)	0.050 (1.27)	0.030 (0.76)
F	0.220 (5.59)	0.135 (3.43)	0.070 (1.78)	0.030 (0.76)
G	0.265 (6.73)	0.110 (2.79)	0.110 (2.79)	0.050 (1.27)
H	0.285 (7.24)	0.150 (3.81)	0.110 (2.79)	0.050 (1.27)

NOTES:

1. Dimensions are in inches.
2. Metric equivalents are given for general information only.
3. Metric equivalents are shown in parentheses.
4. These capacitors are designed for mounting by dip soldering, thermo-compression bonding, reflow soldering, or other conventional means.
5. Cathode terminal may be epoxy coated on one surface for polarity identification.
6. Solderable surfaces are only those surfaces designated as such.
7. Anode and cathode terminals may be two-sided through five-sided, and may not be the same on some designs, but will meet all specification requirements.
8. The anode terminal shall be identified by the riser wire connection, which may extend the case size 0.015" (0.38mm) maximum. The riser wire weld area is not solderable. The riser wire connection shall have a continuous weld of a minimum of 25% of the contact surface.
9. When solder coated terminations are required, add 0.15" (0.38mm) to termination dimension tolerances.

CWR09 Tantalum Chip Capacitors

(Click Here for Dimensional Drawing)

	Cap.	Rated	Case	Termination	Cap.	Level 1	Level 2	Surge	
Part Number	Value (uF)	Voltage (V)	Size	Finish (@)	Tol. (+/-%)	(FRL) (#)	(FRL) (#)	Current (*) (Optional)	Manufacturer
CWR09C@225%#*	2.2	4	A	B, C, K	J, K, M	C, D	B	A, B, C, Blank	AVX
CWR09C@475%#*	4.7	4	B	B, C, K	J, K, M	C, D	B	A, B, C, Blank	AVX
CWR09C@685%#*	6.8	4	C	B, C, K	J, K, M	C, D	B	A, B, C, Blank	AVX
CWR09C@106%#*	10	4	D	B, C, K	J, K, M	C, D	B	A, B, C, Blank	AVX
CWR09C@156%#*	15	4	E	B, C, K	J, K, M	C, D	B	A, B, C, Blank	AVX
CWR09C@336%#*	33	4	F	B, C, K	J, K, M	C, D	B	A, B, C, Blank	AVX
CWR09C@686%#*	68	4	G	B, C, K	J, K, M	C, D	B	A, B, C, Blank	AVX
CWR09C@107%#*	100	4	H	B, C, K	J, K, M	C, D	B	A, B, C, Blank	AVX
CWR09D@155%#*	1.5	6	A	B, C, K	J, K, M	C, D	B	A, B, C, Blank	AVX
	Cap.	Rated	Case	Termination	Cap.	Level 1	Level 2	Surge	
Part Number	Value (uF)	Voltage (V)	Size	Finish (@)	Tol. (+/-%)	(FRL) (#)	(FRL) (#)	Current (*) (Optional)	Manufacturer
CWR09D@335%#*	3.3	6	B	B, C, K	J, K, M	C, D	B	A, B, C, Blank	AVX
CWR09D@475%#*	4.7	6	C	B, C, K	J, K, M	C, D	B	A, B, C, Blank	AVX
CWR09D@685%#*	6.8	6	D	B, C, K	J, K, M	C, D	B	A, B, C, Blank	AVX
CWR09D@106%#*	10	6	E	B, C, K	J, K, M	C, D	B	A, B, C, Blank	AVX

CWR09D@226%#*	22	6	F	B, C, K	J, K, M	C, D	B	A, B, C, Blank	AVX
CWR09D@476%#*	47	6	G	B, C, K	J, K, M	C, D	B	A, B, C, Blank	AVX
CWR09D@686%#*	68	6	H	B, C, K	J, K, M	C, D	B	A, B, C, Blank	AVX
CWR09F@105%#*	1.0	10	A	B, C, K	J, K, M	C, D	B	A, B, C, Blank	AVX
CWR09F@225%#*	2.2	10	B	B, C, K	J, K, M	C, D	B	A, B, C, Blank	AVX
	Cap.	Rated	Case	Termination	Cap.	Level 1	Level 2	Surge	
Part Number	Value (uF)	Voltage (V)	Size	Finish (@)	Tol. (+/-%)	(FRL) (#)	(FRL) (#)	Current (*) (Optional)	Manufacturer
CWR09F@335%#*	3.3	10	C	B, C, K	J, K, M	C, D	B	A, B, C, Blank	AVX
CWR09F@475%#*	4.7	10	D	B, C, K	J, K, M	C, D	B	A, B, C, Blank	AVX
CWR09F@685%#*	6.8	10	E	B, C, K	J, K, M	C, D	B	A, B, C, Blank	AVX
CWR09F@156%#*	15	10	F	B, C, K	J, K, M	C, D	B	A, B, C, Blank	AVX
CWR09F@336%#*	33	10	G	B, C, K	J, K, M	C, D	B	A, B, C, Blank	AVX
CWR09F@476%#*	47	10	H	B, C, K	J, K, M	C, D	B	A, B, C, Blank	AVX
CWR09H@684%#*	0.68	15	A	B, C, K	J, K, M	C, D	B	A, B, C, Blank	AVX
CWR09H@155%#*	1.5	15	B	B, C, K	J, K, M	C, D	B	A, B, C, Blank	AVX
CWR09H@225%#*	2.2	15	C	B, C, K	J, K, M	C, D	B	A, B, C, Blank	AVX
	Cap.	Rated	Case	Termination	Cap.	Level 1	Level 2	Surge	
Part Number	Value (uF)	Voltage (V)	Size	Finish (@)	Tol. (+/-%)	(FRL) (#)	(FRL) (#)	Current (*) (Optional)	Manufacturer
CWR09H@335%#*	3.3	15	D	B, C, K	J, K, M	C, D	B	A, B, C, Blank	AVX
CWR09H@475%#*	4.7	15	E	B, C, K	J, K, M	C, D	B	A, B, C, Blank	AVX
CWR09H@106%#*	10	15	F	B, C, K	J, K, M	C, D	B	A, B, C, Blank	AVX
CWR09H@226%#*	22	15	G	B, C, K	J, K, M	C, D	B	A, B, C, Blank	AVX
CWR09H@336%#*	33	15	H	B, C, K	J, K, M	C, D	B	A, B, C, Blank	AVX
CWR09J@474%#*	0.47	20	A	B, C, K	J, K, M	C, D	B	A, B, C, Blank	AVX
CWR09J@684%#*	0.68	20	B	B, C, K	J, K, M	C, D	B	A, B, C, Blank	AVX
CWR09J@105%#*	1.0	20	B	B, C, K	J, K, M	C, D	B	A, B, C, Blank	AVX
CWR09J@155%#*	1.5	20	C	B, C, K	J, K, M	C, D	B	A, B, C, Blank	AVX
	Cap.	Rated	Case	Termination	Cap.	Level 1	Level 2	Surge	
Part Number	Value (uF)	Voltage (V)	Size	Finish (@)	Tol. (+/-%)	(FRL) (#)	(FRL) (#)	Current (*) (Optional)	Manufacturer
CWR09J@225%#*	2.2	20	D	B, C, K	J, K, M	C, D	B	A, B, C, Blank	AVX
CWR09J@335%#*	3.3	20	E	B, C, K	J, K, M	C, D	B	A, B, C, Blank	AVX
CWR09J@685%#*	6.8	20	F	B, C, K	J, K, M	C, D	B	A, B, C, Blank	AVX
CWR09J@156%#*	15	20	G	B, C, K	J, K, M	C, D	B	A, B, C, Blank	AVX
CWR09J@226%#*	22	20	H	B, C, K	J, K, M	C, D	B	A, B, C, Blank	AVX
CWR09K@334%#*	0.33	25	A	B, C, K	J, K, M	C, D	B	A, B, C, Blank	AVX
CWR09K@684%#*	0.68	25	B	B, C, K	J, K, M	C, D	B	A, B, C, Blank	AVX
CWR09K@105%#*	1.0	25	C	B, C, K	J, K, M	C, D	B	A, B, C, Blank	AVX
CWR09K@155%#*	1.5	25	D	B, C, K	J, K, M	C, D	B	A, B, C, Blank	AVX
	Cap.	Rated	Case	Termination	Cap.	Level 1	Level 2	Surge	
Part Number	Value (uF)	Voltage (V)	Size	Finish (@)	Tol. (+/-%)	(FRL) (#)	(FRL) (#)	Current (*) (Optional)	Manufacturer
CWR09K@225%#*	2.2	25	E	B, C, K	J, K, M	C, D	B	A, B, C, Blank	AVX
CWR09K@475%#*	4.7	25	F	B, C, K	J, K, M	C, D	B	A, B, C, Blank	AVX
CWR09K@685%#*	6.8	25	G	B, C, K	J, K, M	C, D	B	A, B, C, Blank	AVX
CWR09K@106%#*	10	25	G	B, C, K	J, K, M	C, D	B	A, B, C, Blank	AVX
CWR09K@156%#*	15	25	H	B, C, K	J, K, M	C, D	B	A, B, C, Blank	AVX
CWR09M@224%#*	0.22	35	A	B, C, K	J, K, M	C, D	B	A, B, C, Blank	AVX
CWR09M@474%#*	0.47	35	B	B, C, K	J, K, M	C, D	B	A, B, C, Blank	AVX

CWR09M@684%#*	0.68	35	C	B, C, K	J, K, M	C, D	B	A, B, C, Blank	AVX
CWR09M@105%#*	1.0	35	D	B, C, K	J, K, M	C, D	B	A, B, C, Blank	AVX
	Cap.	Rated	Case	Termination	Cap.	Level 1	Level 2	Surge	
Part Number	Value (uF)	Voltage (V)	Size	Finish (@)	Tol. (+/-%)	(FRL) (#)	(FRL) (#)	Current (*) (Optional)	Manufacturer
CWR09M@155%#*	1.5	35	E	B, C, K	J, K, M	C, D	B	A, B, C, Blank	AVX
CWR09M@335%#*	3.3	35	F	B, C, K	J, K, M	C, D	B	A, B, C, Blank	AVX
CWR09M@475%#*	4.7	35	G	B, C, K	J, K, M	C, D	B	A, B, C, Blank	AVX
CWR09M@685%#*	6.8	35	H	B, C, K	J, K, M	C, D	B	A, B, C, Blank	AVX
CWR09N@104%#*	0.10	50	A	B, C, K	J, K, M	C, D	B	A, B, C, Blank	AVX
CWR09N@154%#*	0.15	50	A	B, C, K	J, K, M	C, D	B	A, B, C, Blank	AVX
CWR09N@224%#*	0.22	50	B	B, C, K	J, K, M	C, D	B	A, B, C, Blank	AVX
CWR09N@334%#*	0.33	50	B	B, C, K	J, K, M	C, D	B	A, B, C, Blank	AVX
CWR09N@474%#*	0.47	50	C	B, C, K	J, K, M	C, D	B	A, B, C, Blank	AVX
	Cap.	Rated	Case	Termination	Cap.	Level 1	Level 2	Surge	
Part Number	Value (uF)	Voltage (V)	Size	Finish (@)	Tol. (+/-%)	(FRL) (#)	(FRL) (#)	Current (*) (Optional)	Manufacturer
CWR09N@684%#*	0.68	50	D	B, C, K	J, K, M	C, D	B	A, B, C, Blank	AVX
CWR09N@105%#*	1.0	50	E	B, C, K	J, K, M	C, D	B	A, B, C, Blank	AVX
CWR09N@155%#*	1.5	50	F	B, C, K	J, K, M	C, D	B	A, B, C, Blank	AVX
CWR09N@225%#*	2.2	50	F	B, C, K	J, K, M	C, D	B	A, B, C, Blank	AVX
CWR09N@335%#*	3.3	50	G	B, C, K	J, K, M	C, D	B	A, B, C, Blank	AVX
CWR09N@475%#*	4.7	50	H	B, C, K	J, K, M	C, D	B	A, B, C, Blank	AVX
	Cap.	Rated	Case	Termination	Cap.	Level 1	Level 2	Surge	
Part Number	Value (uF)	Voltage (V)	Size	Finish (@)	Tol. (+/-%)	(FRL) (#)	(FRL) (#)	Current (*) (Optional)	Manufacturer

CWR09 Style

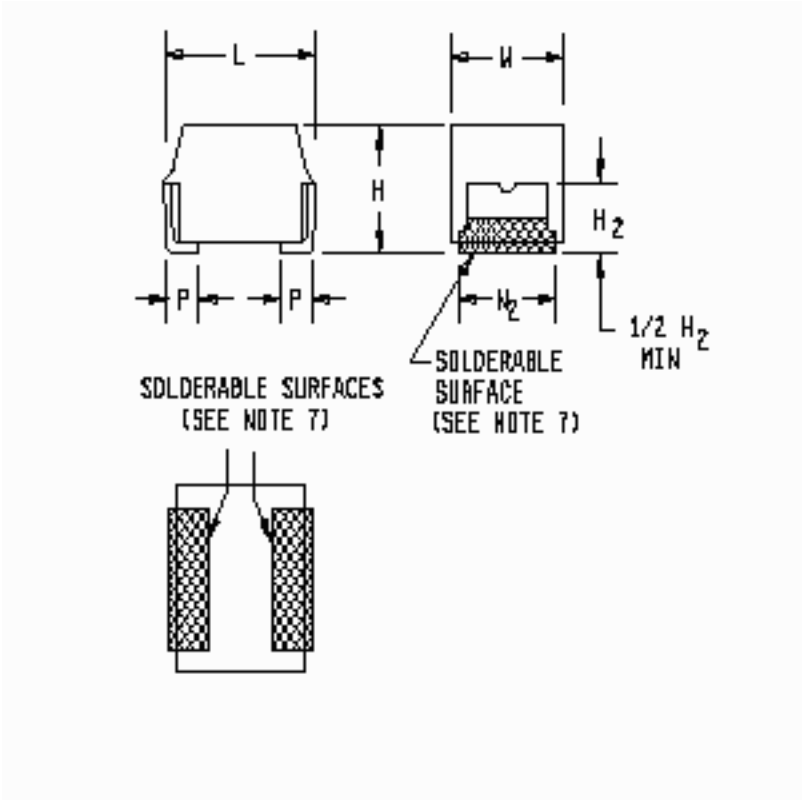

Physical Dimensions Table

Case Size	L	W	H	P	W sub 2	H sub 2
	+/-0.015 (0.38)	+/-0.015 (0.38)	+/-0.015 (0.38)	+/-0.005 (0.13)		minimum
A	0.100 (2.54)	0.050 (1.27)	0.050 (1.27)	0.030 (0.76)	0.050+/-0.005 (1.27+/-0.013)	0.030 (0.76)
B	0.150 (3.81)	0.050 (1.27)	0.050 (1.27)	0.030 (0.76)	0.050+/-0.005 (1.27+/-0.013)	0.030 (0.76)
C	0.200 (5.08)	0.050 (1.27)	0.050 (1.27)	0.030 (0.76)	0.050+/-0.005 (1.27+/-0.013)	0.030 (0.76)
D	0.150 (3.81)	0.100 (2.54)	0.050 (1.27)	0.030 (0.76)	0.095+0.005,-0.010 (2.41+0.13,-0.25)	0.030 (0.76)
E	0.200 (5.08)	0.100 (2.54)	0.050 (1.27)	0.030 (0.76)	0.095+0.005,-0.010 (2.41+0.13,-0.25)	0.030 (0.76)
F	0.220 (5.59)	0.135 (3.43)	0.070 (1.78)	0.030 (0.76)	0.130+/-0.005 (3.30+/-0.13)	0.040 (1.02)
G	0.265 (6.73)	0.110 (2.79)	0.110 (2.79)	0.050 (1.27)	0.105+/-0.005 (2.67+/-0.13)	0.060 (1.52)
H	0.285 (7.24)	0.150 (3.81)	0.110 (2.79)	0.050 (1.27)	0.145+0.005,-0.020 (3.68+0.13,-0.51)	0.060 (1.52)

NOTES:

1. Dimensions are in inches.
2. Metric equivalents are given for general information only.
3. Metric equivalents are shown in parentheses.
4. These capacitors are designed for mounting by dip soldering, thermo-compression bonding, reflow soldering, or other conventional means.
5. The Anode (+) terminal shall be identified by a marking on the case.
6. The termination width (W sub 2) shall be maintained to the top of the solderable area.
7. Solderable surfaces are only those surfaces designated as such. Termination edges are not considered solderable.
9. When solder coated terminations are required, add 0.15" (0.38mm) to termination dimension tolerances.

CWR11 Tantalum Chip Capacitors

(Click Here for Dimensional Drawing)

	Cap.	Rated	Case	Termination	Cap.	Level 1	Level 2	Surge	
Part Number	Value (uF)	Voltage (V)	Size	Finish (@)	Tol. (+/-%)	(FRL) (#)	(FRL) (#)	Current (*) (Optional)	Manufacturer
CWR11C@225%#*	2.2	4	A	B, C, H, K	J, K, M	C, D	B	A, B, C, blank	SPR
CWR11C@475%#*	4.7	4	A	B, C, H, K	J, K, M	C, D	B	A, B, C, blank	SPR
CWR11C@685%#*	6.8	4	B	B, C, H, K	J, K, M	C, D	B	A, B, C, blank	SPR
CWR11C@106%#*	10	4	B	B, C, H, K	J, K, M	C, D	B	A, B, C, blank	SPR
CWR11C@156%#*	15	4	B	B, C, H, K	J, K, M	C, D	B	A, B, C, blank	SPR
CWR11C@336%#*	33	4	C	B, C, H, K	J, K, M	C, D	B	A, B, C, blank	SPR
CWR11C@686%#*	68	4	D	B, C, H, K	J, K, M	C, D	B	A, B, C, blank	SPR
CWR11C@107%#*	100	4	D	B, C, H, K	J, K, M	C, D	B	A, B, C, blank	SPR
CWR11D@155%#*	1.5	6	A	B, C, H, K	J, K, M	C, D	B	A, B, C, blank	AVX, KEM, SPR
	Cap.	Rated	Case	Termination	Cap.	Level 1	Level 2	Surge	
Part Number	Value (uF)	Voltage (V)	Size	Finish (@)	Tol. (+/-%)	(FRL) (#)	(FRL) (#)	Current (*) (Optional)	Manufacturer
CWR11D@225%#*	2.2	6	A	B, C, H, K	J, K, M	C, D	B	A, B, C, blank	AVX, KEM, SPR
CWR11D@335%#*	3.3	6	A	B, C, H, K	J, K, M	C, D	B	A, B, C, blank	AVX, KEM, SPR
CWR11D@475%#*	4.7	6	B	B, C, H, K	J, K, M	C, D	B	A, B, C, blank	AVX, KEM, SPR
CWR11D@685%#*	6.8	6	B	B, C, H, K	J, K, M	C, D	B	A, B, C, blank	AVX, KEM, SPR
CWR11D@106%#*	10	6	B	B, C, H, K	J, K, M	C, D	B	A, B, C, blank	AVX, KEM, SPR
CWR11D@156%#*	15	6	C	B, C, H, K	J, K, M	C, D	B	A, B, C, blank	AVX, KEM, SPR
CWR11D@226%#*	22	6	C	B, C, H, K	J, K, M	C, D	B	A, B, C, blank	AVX, KEM, SPR
CWR11D@476%#*	47	6	D	B, C, H, K	J, K, M	C, D	B	A, B, C, blank	AVX, KEM, SPR
CWR11D@686%#*	68	6	D	B, C, H, K	J, K, M	C, D	B	A, B, C, blank	SPR
	Cap.	Rated	Case	Termination	Cap.	Leve l 1	Level 2	Surge	
Part Number	Value (uF)	Voltage (V)	Size	Finish (@)	Tol. (+/-%)	(FRL) (#)	(FRL) (#)	Current (*) (Optional)	Manufacturer
CWR11F@105%#*	1.0	10	A	B, C, H, K	J, K, M	C, D	B	A, B, C, blank	AVX, KEM, SPR
CWR11F@155%#*	1.5	10	A	B, C, H, K	J, K, M	C, D	B	A, B, C, blank	AVX, KEM, SPR
CWR11F@225%#*	2.2	10	A	B, C, H, K	J, K, M	C, D	B	A, B, C, blank	AVX, KEM, SPR
CWR11F@335%#*	3.3	10	B	B, C, H, K	J, K, M	C, D	B	A, B, C, blank	AVX, KEM, SPR
CWR11F@475%#*	4.7	10	B	B, C, H, K	J, K, M	C, D	B	A, B, C, blank	AVX, KEM, SPR
CWR11F@685%#*	6.8	10	B	B, C, H, K	J, K, M	C, D	B	A, B, C, blank	AVX, KEM, SPR
CWR11F@156%#*	15	10	C	B, C, H, K	J, K, M	C, D	B	A, B, C, blank	AVX, KEM, SPR
CWR11F@336%#*	33	10	D	B, C, H, K	J, K, M	C, D	B	A, B, C, blank	AVX, KEM, SPR

CWR11F@476%#*	47	10	C	B, C, H, K	J, K, M	C, D	B	A, B, C, blank	SPR
	Cap.	Rated	Case	Termination	Cap.	Leve l 1	Level 2	Surge	
Part Number	Value (uF)	Voltage (V)	Size	Finish (@)	Tol. (+/-%)	(FRL) (#)	(FRL) (#)	Current (*) (Optional)	Manufacturer
CWR11H@684%#*	0.68	15	A	B, C, H, K	J, K, M	C, D	B	A, B, C, blank	AVX, KEM, SPR
CWR11H@105%#*	1.0	15	A	B, C, H, K	J, K, M	C, D	B	A, B, C, blank	AVX, KEM, SPR
CWR11H@155%#*	1.5	15	A	B, C, H, K	J, K, M	C, D	B	A, B, C, blank	AVX, KEM, SPR
CWR11H@225%#*	2.2	15	B	B, C, H, K	J, K, M	C, D	B	A, B, C, blank	AVX, KEM, SPR
CWR11H@335%#*	3.3	15	B	B, C, H, K	J, K, M	C, D	B	A, B, C, blank	AVX, KEM, SPR
CWR11H@475%#*	4.7	15	B	B, C, H, K	J, K, M	C, D	B	A, B, C, blank	AVX, KEM, SPR
CWR11H@106%#*	10	15	C	B, C, H, K	J, K, M	C, D	B	A, B, C, blank	AVX, KEM, SPR
CWR11H@226%#*	22	15	D	B, C, H, K	J, K, M	C, D	B	A, B, C, blank	AVX, KEM, SPR
CWR11H@336%#*	33	15	D	B, C, H, K	J, K, M	C, D	B	A, B, C, blank	SPR
	Cap.	Rated	Case	Termination	Cap.	Level 1	Level 2	Surge	
Part Number	Value (uF)	Voltage (V)	Size	Finish (@)	Tol. (+/-%)	(FRL) (#)	(FRL) (#)	Current (*) (Optional)	Manufacturer
CWR11J@474%#*	0.47	20	A	B, C, H, K	J, K, M	C, D	B	A, B, C, blank	AVX, KEM, SPR
CWR11J@684%#*	0.68	20	A	B, C, H, K	J, K, M	C, D	B	A, B, C, blank	AVX, KEM, SPR
CWR11J@105%#*	1.0	20	A	B, C, H, K	J, K, M	C, D	B	A, B, C, blank	AVX, KEM, SPR
CWR11J@155%#*	1.5	20	B	B, C, H, K	J, K, M	C, D	B	A, B, C, blank	AVX, KEM, SPR
CWR11J@225%#*	2.2	20	B	B, C, H, K	J, K, M	C, D	B	A, B, C, blank	AVX, KEM, SPR
CWR11J@335%#*	3.3	20	B	B, C, H, K	J, K, M	C, D	B	A, B, C, blank	AVX, KEM, SPR
CWR11J@155%#*	4.7	20	C	B, C, H, K	J, K, M	C, D	B	A, B, C, blank	AVX, KEM, SPR
CWR11J@685%#*	6.8	20	C	B, C, H, K	J, K, M	C, D	B	A, B, C, blank	AVX, KEM, SPR
CWR11J@156%#*	15	20	D	B, C, H, K	J, K, M	C, D	B	A, B, C, blank	AVX, KEM, SPR
	Cap.	Rated	Case	Termination	Cap.	Level 1	Level 2	Surge	
Part Number	Value (uF)	Voltage (V)	Size	Finish (@)	Tol. (+/-%)	(FRL) (#)	(FRL) (#)	Current (*) (Optional)	Manufacturer
CWR11J@226%#*	22	20	D	B, C, H, K	J, K, M	C, D	B	A, B, C, blank	SPR
CWR11K@334%#*	0.33	25	A	B, C, H, K	J, K, M	C, D	B	A, B, C, blank	AVX, KEM, SPR
CWR11K@474%#*	0.47	25	A	B, C, H, K	J, K, M	C, D	B	A, B, C, blank	AVX, KEM, SPR
CWR11K@684%#*	0.68	25	B	B, C, H, K	J, K, M	C, D	B	A, B, C, blank	AVX, KEM, SPR
CWR11K@105%#*	1.0	25	B	B, C, H, K	J, K, M	C, D	B	A, B, C, blank	AVX, KEM, SPR
CWR11K@155%#*	1.5	25	B	B, C, H, K	J, K, M	C, D	B	A, B, C, blank	AVX, KEM, SPR
CWR11K@225%#*	2.2	25	C	B, C, H, K	J, K, M	C, D	B	A, B, C, blank	AVX, KEM, SPR
CWR11K@335%#*	3.3	25	C	B, C, H, K	J, K, M	C, D	B	A, B, C, blank	AVX, KEM, SPR
CWR11K@475%#*	4.7	25	C	B, C, H, K	J, K, M	C, D	B	A, B, C, blank	AVX, KEM, SPR
	Cap.	Rated	Case	Termination	Cap.	Leve l 1	Level 2	Surge	
Part Number	Value (uF)	Voltage (V)	Size	Finish (@)	Tol. (+/-%)	(FRL) (#)	(FRL) (#)	Current (*) (Optional)	Manufacturer
CWR11K@685%#*	6.8	25	D	B, C, H, K	J, K, M	C, D	B	A, B, C, blank	AVX, KEM, SPR
CWR11K@106%#*	10	25	D	B, C, H, K	J, K, M	C, D	B	A, B, C, blank	AVX, KEM, SPR
CWR11K@156%#*	15	25	D	B, C, H, K	J, K, M	C, D	B	A, B, C, blank	SPR
CWR11M@104%#*	0.1	35	A	B, C, H, K	J, K, M	C, D	B	A, B, C, blank	AVX, KEM, SPR
CWR11M@154%#*	0.15	35	A	B, C, H, K	J, K, M	C, D	B	A, B, C, blank	AVX, KEM, SPR
CWR11M@224%#*	0.22	35	A	B, C, H, K	J, K, M	C, D	B	A, B, C, blank	AVX, KEM, SPR
CWR11M@334%#*	0.33	35	A	B, C, H, K	J, K, M	C, D	B	A, B, C, blank	AVX, KEM, SPR
CWR11M@474%#*	0.47	35	B	B, C, H, K	J, K, M	C, D	B	A, B, C, blank	AVX, KEM, SPR
CWR11M@684%#*	0.68	35	B	B, C, H, K	J, K, M	C, D	B	A, B, C, blank	AVX, KEM, SPR
	Cap.	Rated	Case	Termination	Cap.	Level 1	Level 2	Surge	
Part Number	Value (uF)	Voltage (V)	Size	Finish (@)	Tol. (+/-%)	(FRL) (#)	(FRL) (#)	Current (*) (Optional)	Manufacturer

CWR11M@105%#*	1.0	35	B	B, C, H, K	J, K, M	C, D	B	A, B, C, blank	AVX, KEM, SPR
CWR11M@155%#*	1.5	35	C	B, C, H, K	J, K, M	C, D	B	A, B, C, blank	AVX, KEM, SPR
CWR11M@225%#*	2.2	35	C	B, C, H, K	J, K, M	C, D	B	A, B, C, blank	AVX, KEM, SPR
CWR11M@335%#*	3.3	35	C	B, C, H, K	J, K, M	C, D	B	A, B, C, blank	AVX, KEM, SPR
CWR11M@475%#*	4.7	35	D	B, C, H, K	J, K, M	C, D	B	A, B, C, blank	AVX, KEM, SPR
CWR11M@685%#*	6.8	35	D	B, C, H, K	J, K, M	C, D	B	A, B, C, blank	SPR
CWR11N@104%#*	0.10	50	A	B, C, H, K	J, K, M	C, D	B	A, B, C, blank	AVX, SPR
CWR11N@154%#*	0.15	50	B	B, C, H, K	J, K, M	C, D	B	A, B, C, blank	AVX, SPR
CWR11N@224%#*	0.22	50	B	B, C, H, K	J, K, M	C, D	B	A, B, C, blank	AVX, SPR
	Cap.	Rated	Case	Termination	Cap.	Level 1	Level 2	Surge	
Part Number	Value (uF)	Voltage (V)	Size	Finish (@)	Tol. (+/-%)	(FRL) (#)	(FRL) (#)	Current (*) (Optional)	Manufacturer
CWR11N@334%#*	0.33	50	B	B, C, H, K	J, K, M	C, D	B	A, B, C, blank	AVX
CWR11N@474%#*	0.47	50	C	B, C, H, K	J, K, M	C, D	B	A, B, C, blank	AVX, SPR
CWR11N@684%#*	0.68	50	C	B, C, H, K	J, K, M	C, D	B	A, B, C, blank	AVX, SPR
CWR11N@105%#*	1.0	50	C	B, C, H, K	J, K, M	C, D	B	A, B, C, blank	AVX, SPR
CWR11N@155%#*	1.5	50	D	B, C, H, K	J, K, M	C, D	B	A, B, C, blank	AVX, SPR
CWR11N@225%#*	2.2	50	D	B, C, H, K	J, K, M	C, D	B	A, B, C, blank	AVX, SPR
CWR11N@335%#*	3.3	50	D	B, C, H, K	J, K, M	C, D	B	A, B, C, blank	SPR
CWR11N@475%#*	4.7	50	D	B, C, H, K	J, K, M	C, D	B	A, B, C, blank	SPR
	Cap.	Rated	Case	Termination	Cap.	Leve l 1	Level 2	Surge	
Part Number	Value (uF)	Voltage (V)	Size	Finish (@)	Tol. (+/-%)	(FRL) (#)	(FRL) (#)	Current (*) (Optional)	Manufacturer

CWR11 Style

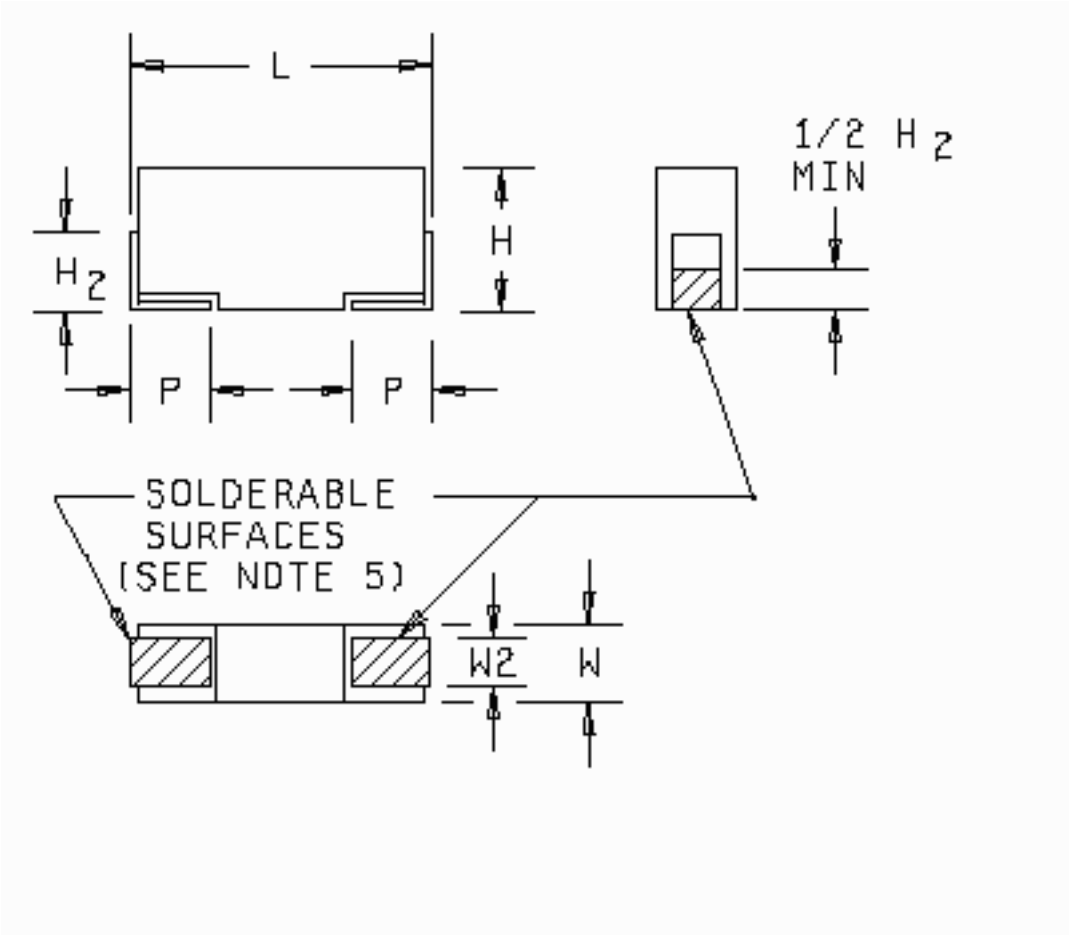

Physical Dimensions Table

Case Size	H	H sub 2	L	P	W	W sub 2
		(min)		+/-0.3 (0.12)		+/-0.1 (0.004) *See Note 6)
A	1.6+/-0.2 (0.063+/-0.008)	0.7 (0.28)	3.2+/-0.2 (0.126+/-0.008)	0.8 (0.031)	1.6+/-0.2 (0.063+/-0.008)	1.2 (0.047)
B	1.9+/-0.2 (0.075+/-0.008)	0.7 (0.28)	3.5+/-0.2 (0.138+/-0.008)	0.8 (0.031)	2.8+/-0.3 (0.110+/-0.012)	2.2 (0.087)
C	2.5+/-0.3 (0.098+/-0.012)	1.0 (0.39)	6.0+/-0.3 (0.236+/-0.012)	1.3 (0.051)	3.2+/-0.2 (0.126+/-0.008)	2.2 (0.087)
D	2.8+/-0.3 (0.110+/-0.012)	1.0 (0.39)	7.3+/-0.3 (0.287+/-0.012)	1.3 (0.051)	4.3+/-0.3 (0.169+/-0.012)	2.4 (0.094)

NOTES:

1. Dimensions are in millimeters.
2. Inch equivalents are in parentheses and are given for general information only.
3. These capacitors are designed for mounting by dip or wave soldering, reflow soldering, thermo-compression bonding, or other conventional means.
4. The Anode (+) terminal shall be identified by a marking on the case or by bevel on the anode end..
5. Solderable surfaces are only those surfaces designated as such. Termination edges are not considered solderable.
6. Applicable to solderable surfaces only. The configuration of the nonsolderable area is optional.
7. For hot solder dipped terminations (termination finish Code C), add 0.38 mm (0.15 inches) to termination dimension tolerances.

Glass Capacitors

The following glass capacitor specifications are available for selection:

Military Specification	Generic Designator	Description
MIL-PRF-23269	CYR	Fixed, Glass <!-- #EndEditable -->

Parts

|

Packaging

|

Radiation

|

Publications

|

Calendar

|

Experts

Admin Login

|

Request Account

|

Feedback

|

Site Map

|

Help

|

Search

NEPP Program Manager:

Chuck Barnes, Jet Propulsion Laboratory

Responsible NASA Official:

Michael Sampson, NEPAG Manager

Website Comments:

Web Development Team

Last Modified:

August 8, 2001

AETD IT Security Banner

NASA Privacy Statement

Glass Capacitor Manufacturer Listing

Listed below are links to manufacturer data sites that may provide additional part related information. The linked sites are not under the control of NPSL and NASA is not responsible for information contained in the linked site. We are providing these links for your convenience only.

AVX

AVX Corporation

3900 Electronics Drive

Raleigh, NC 16299

CAGE Code: 16299

Tel.: (919) 876-1100

Go to -

NEPP

|

NPSL

|

Capacitors

MIL-PRF-23269, CAPACITORS

Fixed, Glass Dielectric, Established Reliability

CYR Styles

Part Number/Ordering Explanation

Important! Application Notes

Revision History for MIL-PRF-23269 Listing in the NPSL

Last Revision: 08/05/99

Click on the link below to see the associated parts selection listing:

Style	Detail Specification	Description (L x W)
CYR10	MIL-PRF-23269/1	Axial lead, (0.344" x 0.172") 0.5 pF to 300 pF (100 V)
CYR15	MIL-PRF-23269/2	Axial lead, (0.469" x 0.266") 220 pF to 1200 pF (100 V)
CYR20	MIL-PRF-23269/3	Axial lead, (0.734" x 0.422") 560 pF to 3300 pF (100 V)
CYR30	MIL-PRF-23269/4	Axial lead, (0.766" x 0.750") 3600 pF to 6200 pF (100 V)

APPLICATION NOTES FOR MIL-PRF-23269

1) Lead material and coating are specified in the detailed specification sheet for each device type.

Revision History for MIL-PRF-23269 Listing in the NPSL

Date	Description of Update
08/05/99	Changed specification name to "MIL-PRF-23269" rather than "MIL-C-23269" to reference the conversion to performance based specifications
01/19/99	Added Dimensional Drawings to this Section
05/01/97	Initial Release of MIL-C-23269 Section in the NPSL

Part Number Ordering Information, example and explanation:

M23269/01-7001 where,

M23269	/01	-7001
Military Specification Number	Detail Specification Number	Four-digit dash number which uniquely identifies the capacitance, tolerance, rated dc voltage and failure rate level

Part number ordering options are developed using the following criteria:

Style	Detail Specification		Available Tolerances
CYR10	MIL-PRF-23269/1		0.25 pF, 0.50 pF, 1%, 2%, 5%
CYR15	MIL-PRF-23269/2		1%, 2%, 5%
CYR20	MIL-PRF-23269/3		1%, 2%, 5%
CYR30	MIL-PRF-23269/4		1%, 2%, 5%

Failure Rate Levels:

S =0.001%/1000 hours (

Level 1 and Level 2

)

CYR10 Glass Capacitors

	Capacitance	Rated	Capacitance Tol.	Level 1 or 2	
Part Number	Value (pF)	Voltage (V)	(+/-) pF or %	[FRL]	Manufacturer
M23269/01-7001	0.5	100	0.25	S	AVX
M23269/01-7002	1.0	100	0.25	S	AVX
M23269/01-7003	1.5	100	0.25	S	AVX
M23269/01-7004	2.2	100	0.25	S	AVX
M23269/01-7005	2.2	100	0.50	S	AVX
M23269/01-7006	2.7	100	0.25	S	AVX
M23269/01-7007	3.0	100	0.25	S	AVX
M23269/01-7008	3.0	100	0.50	S	AVX
M23269/01-7009	3.3	100	0.25	S	AVX
M23269/01-7010	3.6	100	0.25	S	AVX
M23269/01-7011	3.6	100	0.50	S	AVX
M23269/01-7012	3.9	100	0.25	S	AVX
M23269/01-7013	4.3	100	0.25	S	AVX
M23269/01-7014	4.3	100	0.50	S	AVX
M23269/01-7015	4.7	100	0.25	S	AVX
M23269/01-7016	5.1	100	0.25	S	AVX
M23269/01-7017	5.6	100	0.25	S	AVX
M23269/01-7018	5.6	100	5%	S	AVX
	Capacitance	Rated	Capacitance Tol.	Level 1 or 2	
Part Number	Value (pF)	Voltage (V)	(+/-) pF or %	[FRL]	Manufacturer
M23269/01-7019	6.2	100	0.25	S	AVX
M23269/01-7020	6.2	100	5%	S	AVX
M23269/01-7021	6.8	100	0.25	S	AVX
M23269/01-7022	6.8	100	5%	S	AVX
M23269/01-7023	7.5	100	0.25	S	AVX
M23269/01-7024	7.5	100	5%	S	AVX
M23269/01-7025	8.2	100	0.25	S	AVX
M23269/01-7026	8.2	100	5%	S	AVX
M23269/01-7027	9.1	100	0.25	S	AVX

M23269/01-7028	9.1	100	5%	S	AVX
M23269/01-7029	10	100	0.25	S	AVX
M23269/01-7030	10	100	5%	S	AVX
M23269/01-7031	11	100	0.25	S	AVX
M23269/01-7032	11	100	5%	S	AVX
M23269/01-7033	12	100	0.25	S	AVX
M23269/01-7034	12	100	5%	S	AVX
M23269/01-7035	13	100	2%	S	AVX
M23269/01-7036	13	100	5%	S	AVX
	Capacitance	Rated	Capacitance Tol.	Level 1 or 2	
Part Number	Value (pF)	Voltage (V)	(+/-) pF or %	[FRL]	Manufacturer
M23269/01-7037	15	100	2%	S	AVX
M23269/01-7038	15	100	5%	S	AVX
M23269/01-7039	16	100	2%	S	AVX
M23269/01-7040	16	100	5%	S	AVX
M23269/01-7041	18	100	2%	S	AVX
M23269/01-7042	18	100	5%	S	AVX
M23269/01-7043	20	100	2%	S	AVX
M23269/01-7044	20	100	5%	S	AVX
M23269/01-7045	22	100	2%	S	AVX
M23269/01-7046	22	100	5%	S	AVX
M23269/01-7047	24	100	2%	S	AVX
M23269/01-7048	24	100	5%	S	AVX
M23269/01-7049	27	100	1%	S	AVX
M23269/01-7050	27	100	2%	S	AVX
M23269/01-7051	27	100	5%	S	AVX
M23269/01-7052	30	100	1%	S	AVX
M23269/01-7053	30	100	2%	S	AVX
M23269/01-7054	30	100	5%	S	AVX
	Capacitance	Rated	Capacitance Tol.	Level 1 or 2	
Part Number	Value (pF)	Voltage (V)	(+/-) pF or %	[FRL]	Manufacturer
M23269/01-7055	33	100	1%	S	AVX
M23269/01-7056	33	100	2%	S	AVX
M23269/01-7057	33	100	5%	S	AVX
M23269/01-7058	36	100	1%	S	AVX
M23269/01-7059	36	100	2%	S	AVX
M23269/01-7060	36	100	5%	S	AVX
M23269/01-7061	39	100	1%	S	AVX
M23269/01-7062	39	100	2%	S	AVX
M23269/01-7063	39	100	5%	S	AVX
M23269/01-7064	43	100	1%	S	AVX
M23269/01-7065	43	100	2%	S	AVX
M23269/01-7066	43	100	5%	S	AVX
M23269/01-7067	47	100	1%	S	AVX
M23269/01-7068	47	100	2%	S	AVX
M23269/01-7069	47	100	5%	S	AVX
M23269/01-7070	51	100	1%	S	AVX

M23269/01-7071	51	100	2%	S	AVX
M23269/01-7072	51	100	5%	S	AVX
	Capacitance	Rated	Capacitance Tol.	Level 1 or 2	
Part Number	Value (pF)	Voltage (V)	(+/-) pF or %	[FRL]	Manufacturer
M23269/01-7073	56	100	1%	S	AVX
M23269/01-7074	56	100	2%	S	AVX
M23269/01-7075	56	100	5%	S	AVX
M23269/01-7076	62	100	1%	S	AVX
M23269/01-7077	62	100	2%	S	AVX
M23269/01-7078	62	100	5%	S	AVX
M23269/01-7079	68	100	1%	S	AVX
M23269/01-7080	68	100	2%	S	AVX
M23269/01-7081	68	100	5%	S	AVX
M23269/01-7082	75	100	1%	S	AVX
M23269/01-7083	75	100	2%	S	AVX
M23269/01-7084	75	100	5%	S	AVX
M23269/01-7085	82	100	1%	S	AVX
M23269/01-7086	82	100	2%	S	AVX
M23269/01-7087	82	100	5%	S	AVX
M23269/01-7088	91	100	1%	S	AVX
M23269/01-7089	91	100	2%	S	AVX
M23269/01-7090	91	100	5%	S	AVX
	Capacitance	Rated	Capacitance Tol.	Level 1 or 2	
Part Number	Value (pF)	Voltage (V)	(+/-) pF or %	[FRL]	Manufacturer
M23269/01-7091	100	100	1%	S	AVX
M23269/01-7092	100	100	2%	S	AVX
M23269/01-7093	100	100	5%	S	AVX
M23269/01-7094	110	100	1%	S	AVX
M23269/01-7095	110	100	2%	S	AVX
M23269/01-7096	110	100	5%	S	AVX
M23269/01-7097	120	100	1%	S	AVX
M23269/01-7098	120	100	2%	S	AVX
M23269/01-7099	120	100	5%	S	AVX
M23269/01-7100	130	100	1%	S	AVX
M23269/01-7101	130	100	2%	S	AVX
M23269/01-7102	130	100	5%	S	AVX
M23269/01-7103	150	100	1%	S	AVX
M23269/01-7104	150	100	2%	S	AVX
M23269/01-7105	150	100	5%	S	AVX
M23269/01-7106	160	100	1%	S	AVX
M23269/01-7107	160	100	2%	S	AVX
M23269/01-7108	160	100	5%	S	AVX
	Capacitance	Rated	Capacitance Tol.	Level 1 or 2	
Part Number	Value (pF)	Voltage (V)	(+/-) pF or %	[FRL]	Manufacturer
M23269/01-7109	180	100	1%	S	AVX
M23269/01-7110	180	100	2%	S	AVX
M23269/01-7111	180	100	5%	S	AVX

M23269/01-7112	200	100	1%	S	AVX
M23269/01-7113	200	100	2%	S	AVX
M23269/01-7114	200	100	5%	S	AVX
M23269/01-7115	220	100	1%	S	AVX
M23269/01-7116	220	100	2%	S	AVX
M23269/01-7117	220	100	5%	S	AVX
M23269/01-7118	240	100	1%	S	AVX
M23269/01-7119	240	100	2%	S	AVX
M23269/01-7120	240	100	5%	S	AVX
M23269/01-7121	270	100	1%	S	AVX
M23269/01-7122	270	100	2%	S	AVX
M23269/01-7123	270	100	5%	S	AVX
M23269/01-7124	300	100	1%	S	AVX
M23269/01-7125	300	100	2%	S	AVX
M23269/01-7126	300	100	5%	S	AVX
	Capacitance	Rated	Capacitance Tol.	Level 1 or 2	
Part Number	Value (pF)	Voltage (V)	(+/-) pF or %	[FRL]	Manufacturer

Style CYR10

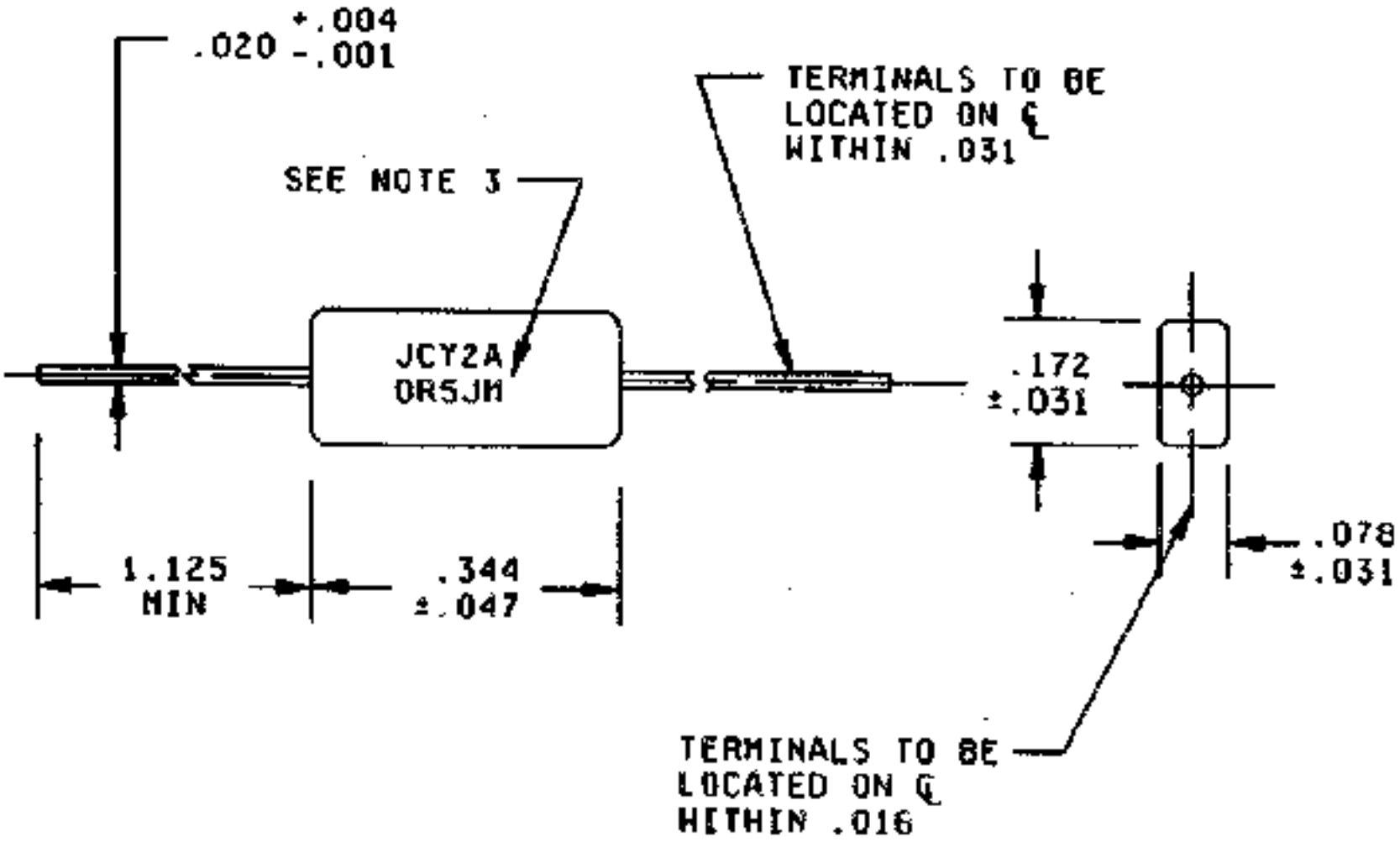

Notes:

1) Dimensions are in inches.

2) Metric equivalents are given for general information only.

3) See marking requirement.

	Capacitance	Rated	Capacitance Tol.	Level 1 or 2	
Part Number	Value (pF)	Voltage (V)	(+/-) pF or %	[FRL]	Manufacturer
M23269/02-7001	220	100	1%	S	AVX
M23269/02-7002	220	100	2%	S	AVX
M23269/02-7003	220	100	5%	S	AVX
M23269/02-7004	240	100	1%	S	AVX
M23269/02-7005	240	100	2%	S	AVX
M23269/02-7006	240	100	5%	S	AVX
M23269/02-7007	270	100	1%	S	AVX
M23269/02-7008	270	100	2%	S	AVX
M23269/02-7009	270	100	5%	S	AVX
M23269/02-7010	300	100	1%	S	AVX
M23269/02-7011	300	100	2%	S	AVX
M23269/02-7012	300	100	5%	S	AVX
M23269/02-7013	330	100	1%	S	AVX
M23269/02-7014	330	100	2%	S	AVX
M23269/02-7015	330	100	5%	S	AVX
M23269/02-7016	360	100	1%	S	AVX
M23269/02-7017	360	100	2%	S	AVX
M23269/02-7018	360	100	5%	S	AVX
	Capacitance	Rated	Capacitance Tol.	Level 1 or 2	
Part Number	Value (pF)	Voltage (V)	(+/-) pF or %	[FRL]	Manufacturer
M23269/02-7019	390	100	1%	S	AVX
M23269/02-7020	390	100	2%	S	AVX
M23269/02-7021	390	100	5%	S	AVX
M23269/02-7022	430	100	1%	S	AVX
M23269/02-7023	430	100	2%	S	AVX
M23269/02-7024	430	100	5%	S	AVX
M23269/02-7025	470	100	1%	S	AVX
M23269/02-7026	470	100	2%	S	AVX
M23269/02-7027	470	100	5%	S	AVX
M23269/02-7028	510	100	1%	S	AVX
M23269/02-7029	510	100	2%	S	AVX
M23269/02-7030	510	100	5%	S	AVX
M23269/02-7031	560	100	1%	S	AVX
M23269/02-7032	560	100	2%	S	AVX
M23269/02-7033	560	100	5%	S	AVX
M23269/02-7034	620	100	1%	S	AVX
M23269/02-7035	620	100	2%	S	AVX
M23269/02-7036	620	100	5%	S	AVX
	Capacitance	Rated	Capacitance Tol.	Level 1 or 2	
Part Number	Value (pF)	Voltage (V)	(+/-) pF or %	[FRL]	Manufacturer
M23269/02-7037	680	100	1%	S	AVX
M23269/02-7038	680	100	2%	S	AVX
M23269/02-7039	680	100	5%	S	AVX

M23269/02-7040	750	100	1%	S	AVX
M23269/02-7041	750	100	2%	S	AVX
M23269/02-7042	750	100	5%	S	AVX
M23269/02-7043	820	100	1%	S	AVX
M23269/02-7044	820	100	2%	S	AVX
M23269/02-7045	820	100	5%	S	AVX
M23269/02-7046	910	100	1%	S	AVX
M23269/02-7047	910	100	2%	S	AVX
M23269/02-7048	910	100	5%	S	AVX
M23269/02-7049	1000	100	1%	S	AVX
M23269/02-7050	1000	100	2%	S	AVX
M23269/02-7051	1000	100	5%	S	AVX
M23269/02-7052	1100	100	1%	S	AVX
M23269/02-7053	1100	100	2%	S	AVX
M23269/02-7054	1100	100	5%	S	AVX
	Capacitance	Rated	Capacitance Tol.	Level 1 or 2	
Part Number	Value (pF)	Voltage (V)	(+/-) pF or %	[FRL]	Manufacturer
M23269/02-7055	1200	100	1%	S	AVX
M23269/02-7056	1200	100	2%	S	AVX
M23269/02-7057	1200	100	5%	S	AVX

Style CYR15

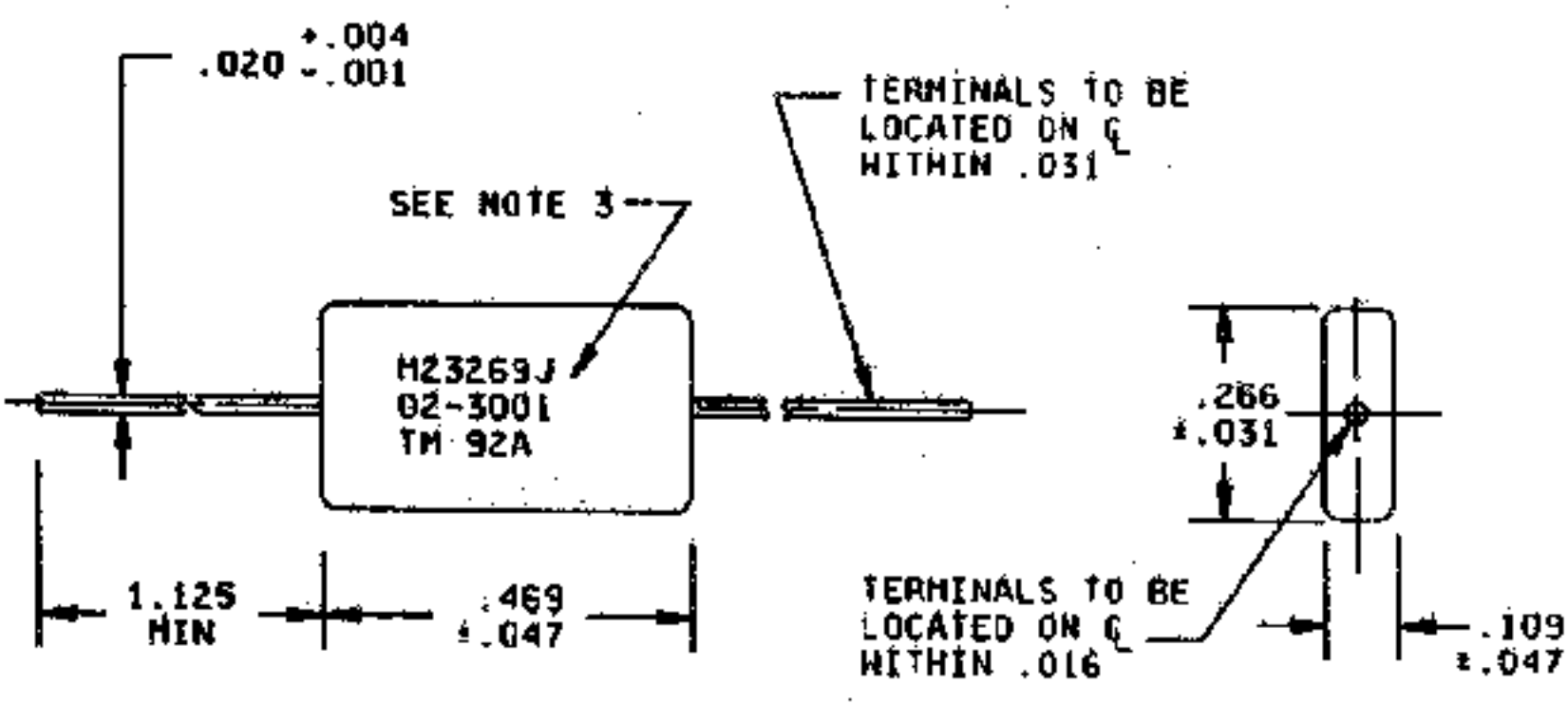

Notes:

1) Dimensions are in inches.

2) Metric equivalents are given for general information only.

3) See marking requirements.

CYR20 Glass Capacitors

	Capacitance	Rated	Capacitance Tol.	Level 1 or 2	
Part Number	Value (pF)	Voltage (V)	(+/-) pF or %	[FRL]	Manufacturer
M23269/03-7001	560	100	1%	S	AVX
M23269/03-7002	560	100	2%	S	AVX
M23269/03-7003	560	100	5%	S	AVX
M23269/03-7004	620	100	1%	S	AVX
M23269/03-7005	620	100	2%	S	AVX

M23269/03-7006	620	100	5%	S	AVX
M23269/03-7007	680	100	1%	S	AVX
M23269/03-7008	680	100	2%	S	AVX
M23269/03-7009	680	100	5%	S	AVX
M23269/03-7010	750	100	1%	S	AVX
M23269/03-7011	750	100	2%	S	AVX
M23269/03-7012	750	100	5%	S	AVX
M23269/03-7013	820	100	1%	S	AVX
M23269/03-7014	820	100	2%	S	AVX
M23269/03-7015	820	100	5%	S	AVX
M23269/03-7016	910	100	1%	S	AVX
M23269/03-7017	910	100	2%	S	AVX
M23269/03-7018	910	100	5%	S	AVX
	Capacitance	Rated	Capacitance Tol.	Level 1 or 2	
Part Number	Value (pF)	Voltage (V)	(+/-) pF or %	[FRL]	Manufacturer
M23269/03-7019	1000	100	1%	S	AVX
M23269/03-7020	1000	100	2%	S	AVX
M23269/03-7021	1000	100	5%	S	AVX
M23269/03-7022	1100	100	1%	S	AVX
M23269/03-7023	1100	100	2%	S	AVX
M23269/03-7024	1100	100	5%	S	AVX
M23269/03-7025	1200	100	1%	S	AVX
M23269/03-7026	1200	100	2%	S	AVX
M23269/03-7027	1200	100	5%	S	AVX
M23269/03-7028	1300	100	1%	S	AVX
M23269/03-7029	1300	100	2%	S	AVX
M23269/03-7030	1300	100	5%	S	AVX
M23269/03-7031	1500	100	1%	S	AVX
M23269/03-7032	1500	100	2%	S	AVX
M23269/03-7033	1500	100	5%	S	AVX
M23269/03-7034	1600	100	1%	S	AVX
M23269/03-7035	1600	100	2%	S	AVX
M23269/03-7036	1600	100	5%	S	AVX
	Capacitance	Rated	Capacitance Tol.	Level 1 or 2	
Part Number	Value (pF)	Voltage (V)	(+/-) pF or %	[FRL]	Manufacturer
M23269/03-7037	1800	100	1%	S	AVX
M23269/03-7038	1800	100	2%	S	AVX
M23269/03-7039	1800	100	5%	S	AVX
M23269/03-7040	2000	100	1%	S	AVX
M23269/03-7041	2000	100	2%	S	AVX
M23269/03-7042	2000	100	5%	S	AVX
M23269/03-7043	2200	100	1%	S	AVX
M23269/03-7044	2200	100	2%	S	AVX
M23269/03-7045	2200	100	5%	S	AVX
M23269/03-7046	2400	100	1%	S	AVX
M23269/03-7047	2400	100	2%	S	AVX
M23269/03-7048	2400	100	5%	S	AVX

M23269/03-7049	2700	100	1%	S	AVX
M23269/03-7050	2700	100	2%	S	AVX
M23269/03-7051	2700	100	5%	S	AVX
M23269/03-7052	3000	100	1%	S	AVX
M23269/03-7053	3000	100	2%	S	AVX
M23269/03-7054	3000	100	5%	S	AVX
	Capacitance	Rated	Capacitance Tol.	Level 1 or 2	
Part Number	Value (pF)	Voltage (V)	(+/-) pF or %	[FRL]	Manufacturer
M23269/03-7055	3300	100	1%	S	AVX
M23269/03-7056	3300	100	2%	S	AVX
M23269/03-7057	3300	100	5%	S	AVX

Style CYR20

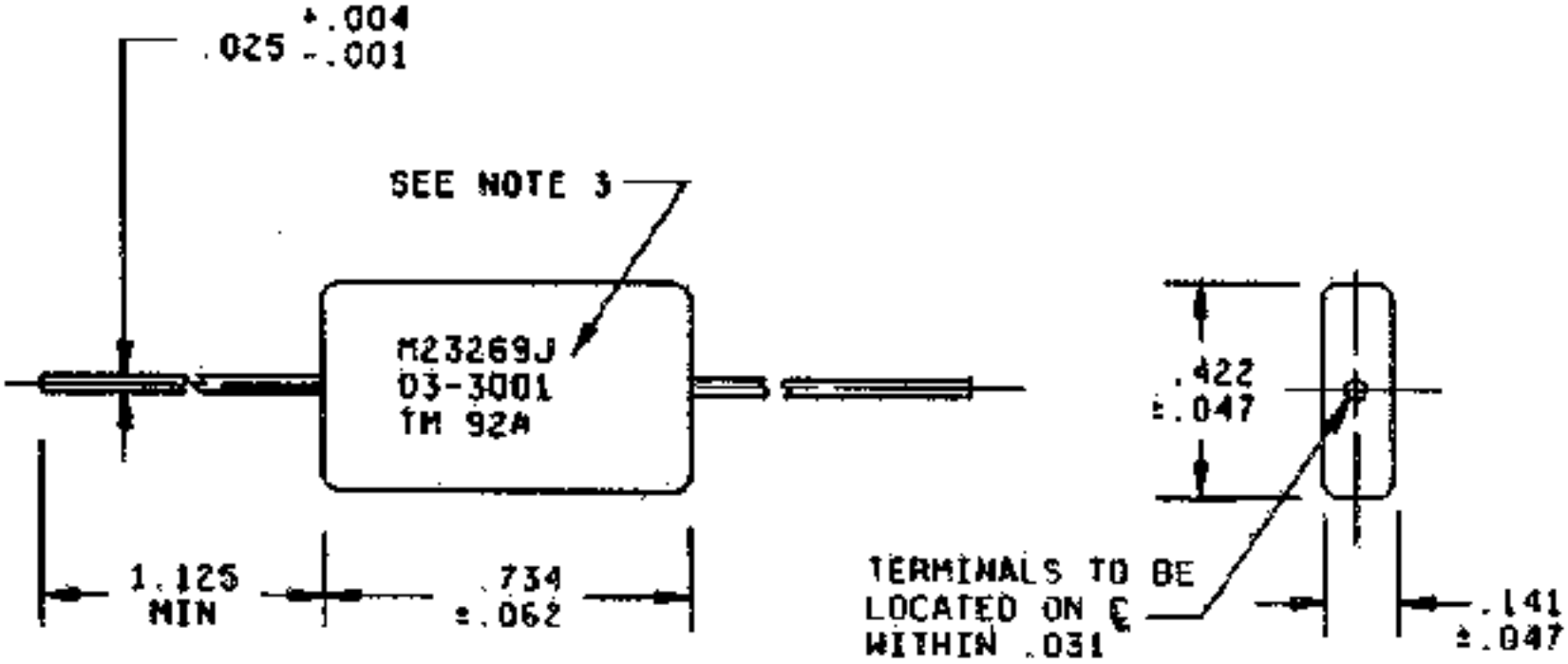

Notes:

1) Dimensions are in inches.

2) Metric equivalents are given for general information only.

3) See marking requirement.

CYR30 Glass Capacitors

	Capacitance	Rated	Capacitance Tol.	Level 1 or 2	
Part Number	Value (pF)	Voltage (V)	(+/-) pF or %	[FRL]	Manufacturer
M23269/04-7001	3600	100	1%	S	AVX
M23269/04-7002	3600	100	2%	S	AVX
M23269/04-7003	3600	100	5%	S	AVX
M23269/04-7004	3900	100	1%	S	AVX
M23269/04-7005	3900	100	2%	S	AVX
M23269/04-7006	3900	100	5%	S	AVX
M23269/04-7007	4300	100	1%	S	AVX
M23269/04-7008	4300	100	2%	S	AVX
M23269/04-7009	4300	100	5%	S	AVX
M23269/04-7010	4700	100	1%	S	AVX
M23269/04-7011	4700	100	2%	S	AVX
M23269/04-7012	4700	100	5%	S	AVX
M23269/04-7013	5100	100	1%	S	AVX
M23269/04-7014	5100	100	2%	S	AVX
M23269/04-7015	5100	100	5%	S	AVX
M23269/04-7016	5600	100	1%	S	AVX
M23269/04-7017	5600	100	2%	S	AVX
M23269/04-7018	5600	100	5%	S	AVX
	Capacitance	Rated	Capacitance Tol.	Level 1 or 2	
Part Number	Value (pF)	Voltage (V)	(+/-) pF or %	[FRL]	Manufacturer
M23269/04-7019	6200	100	1%	S	AVX
M23269/04-7020	6200	100	2%	S	AVX
M23269/04-7021	6200	100	5%	S	AVX

Style CYR30

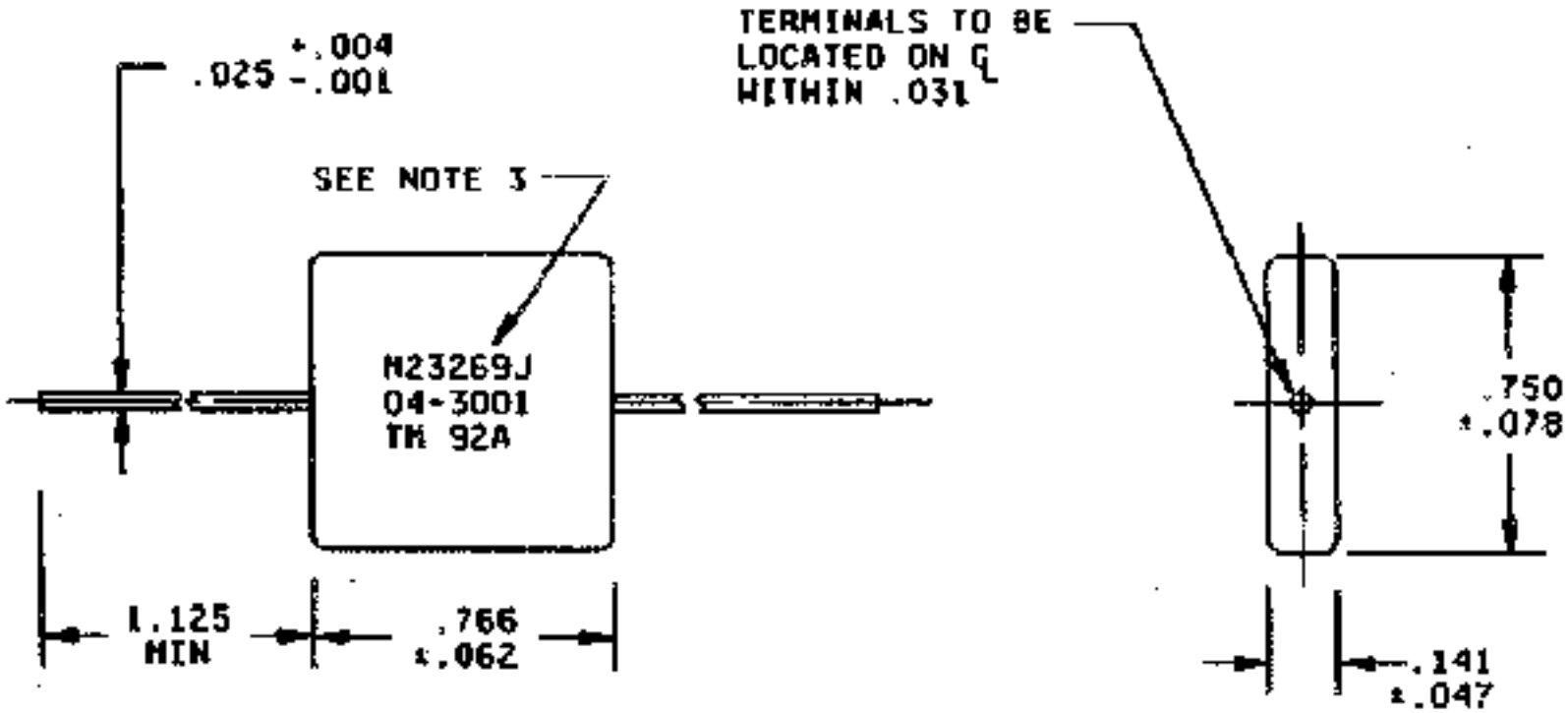

Notes:

1) Dimensions are in inches.

2) Metric equivalents are given for general information only.

3) See marking requirement.

Plastic Film Capacitors

The following plastic film capacitor specifications are available for selection:

Military Specification	Generic Designator	Description
MIL-PRF-83421	CRH	Fixed, Metallized Plastic Film
MIL-PRF-87217	CHS	Fixed, Supermetallized Plastic Film <!-- #EndEditable -->

|

Request Account

|

Feedback

|

Site Map

|

Help

|

Search

NEPP Program Manager:

Chuck Barnes, Jet Propulsion Laboratory

Responsible NASA Official:

Michael Sampson, NEPAG Manager

Website Comments:

Web Development Team

Last Modified:

August 8, 2001

AETD IT Security Banner

NASA Privacy Statement

Plastic Film Capacitor Manufacturer Listing

Listed below are links to manufacturer data sites that may provide additional part related information. The linked sites are not under the control of NPSL and NASA is not responsible for information contained in the linked site. We are providing these links for your convenience only.

CRC

Component Research Corporation

1655 26th Street

Santa Monica, CA 90404

CAGE Code: 12517

Tel.: (310) 829-3615

DEI

Dearborn Electronics, Inc.

1221 N. Highways 17 92

Longwood, FL 32750

CAGE Code: 01884

Tel.: (305) 695-6562

Go to -

NEPP

|

NPSL

|

Capacitors

MIL-PRF-83421, CAPACITORS

Fixed, Metallized, Plastic Film Dielectric, Hermetically Sealed, Established Reliability

CRH Styles

Part Number/Ordering Explanation

Important! Application Notes

Revision History for MIL-PRF-83421 Listing in the NPSL

Last Revision: 12/01/97

Click on the link below to see the associated parts selection listing:

Style	Detail Specification	Description
CRH01	MIL-PRF-83421/1	Axial lead, hermetically sealed 0.001 uF to 22 uF (30 V)
CRH02	MIL-PRF-83421/1	Axial lead, hermetically sealed 0.001 uF to 10 uF (50 V)
CRH03	MIL-PRF-83421/1	Axial lead, hermetically sealed 0.001 uF to 10 uF (100 V)
CRH04	MIL-PRF-83421/1	Axial lead, hermetically sealed 0.001 uF to 3.9 uF (200 V)
CRH05	MIL-PRF-83421/1	Axial lead, hermetically sealed 0.001 uF to 2.0 uF (400 V)

APPLICATION NOTES FOR MIL-PRF-83421

1) These capacitors are not recommended for use in circuits where the energy is less than 250 microjoules. This recommendation is based on the "self healing" properties of plastic film capacitors and the need for sufficient energy to be available to promote self healing. Without adequate energy available, self healing will not occur and parts may catastrophically fail short circuit.

2) Parts covered by this specification contain internal soldered connections which may reflow during installation.. The plastic dielectric in these parts is also temperature sensitive. Special precautions such as heat sinking are recommended when soldering onto boards.

3) Lead material and coating are specified in MIL-PRF-83421/1.

Revision History for MIL-PRF-83421 Listing in the NPSL

12/01/97	Made changes indicating the specification conversion to a performance specification (MIL-PRF-83421 instead of MIL-C-83421).
05/01/97	Initial Release of MIL-C-83421 Section in the NPSL

Part Number Ordering Information, example and explanation:

M83421/01-1003S where,

M83421	/01	-1	003
Military Specification Number	Detail Specification Number	Single digit which identifies the capacitor style and rated voltage	Three-digit dash number which uniquely identifies the capacitance, tolerance, a

Part number ordering options are developed using the following criteria:

Style	Rated Voltage		Failure Rate Levels:
CRH01	30 Vdc		R = 0.01%/1000 hours (Level 2)
CRH02	50 Vdc		S = 0.001%/1000 hours (Level 1)

CRH03	100 Vdc		
CRH04	200 Vdc		
CRH05	400 Vdc		

CRH01 Plastic Film Capacitors

		Part Number (M83421/01-XXXX#)					
		Capacitance Tolerance	Capacitance	Rated	Level 1	Level 2	Manufacturer
1.0 %	5.0 %	10.0 %	Value (uF)	Voltage (V)	(FRL)(#)	(FRL)(#)	
-1003#	-1005#	-1006#	0.001	30	S	R	CRC, DEI
-1009#	-1011#	-1012#	0.0012	30	S	R	CRC, DEI
-1015#	-1017#	-1018#	0.0015	30	S	R	CRC, DEI
-1021#	-1023#	-1024#	0.0018	30	S	R	CRC, DEI
-1027#	-1029#	-1030#	0.002	30	S	R	CRC, DEI
-1033#	-1035#	-1036#	0.0022	30	S	R	CRC, DEI
-1039#	-1041#	-1042#	0.0027	30	S	R	CRC, DEI
-1045#	-1047#	-1048#	0.0033	30	S	R	CRC, DEI
-1051#	-1053#	-1054#	0.0039	30	S	R	CRC, DEI
-1057#	-1059#	-1060#	0.0047	30	S	R	CRC, DEI
-1063#	-1065#	-1066#	0.005	30	S	R	CRC, DEI
-1069#	-1071#	-1072#	0.0056	30	S	R	CRC, DEI
-1075#	-1077#	-1078#	0.0068	30	S	R	CRC, DEI
-1081#	-1083#	-1084#	0.0082	30	S	R	CRC, DEI
-1087#	-1089#	-1090#	0.01	30	S	R	CRC, DEI
-1093#	-1095#	-1096#	0.012	30	S	R	CRC, DEI
-1099#	-1101#	-1102#	0.015	30	S	R	CRC, DEI
-1105#	-1107#	-1108#	0.018	30	S	R	CRC, DEI
		Part Number (M83421/01-XXXX#)					
		Capacitance Tolerance	Capacitance	Rated	Level 1	Level 2	Manufacturer
1.0 %	5.0 %	10.0 %	Value (uF)	Voltage (V)	(FRL)(#)	(FRL)(#)	
-1111#	-1113#	-1114#	0.02	30	S	R	CRC, DEI
-1117#	-1119#	-1120#	0.022	30	S	R	CRC, DEI
-1123#	-1125#	-1126#	0.027	30	S	R	CRC, DEI
-1129#	-1131#	-1132#	0.033	30	S	R	CRC, DEI
-1135#	-1137#	-1138#	0.039	30	S	R	CRC, DEI
-1141#	-1143#	-1144#	0.047	30	S	R	CRC, DEI
-1147#	-1149#	-1150#	0.050	30	S	R	CRC, DEI
-1153#	-1155#	-1156#	0.056	30	S	R	CRC, DEI
-1159#	-1161#	-1162#	0.068	30	S	R	CRC, DEI
-1165#	-1167#	-1168#	0.082	30	S	R	CRC, DEI
-1171#	-1173#	-1174#	0.10	30	S	R	CRC, DEI
-1177#	-1179#	-1180#	0.12	30	S	R	CRC, DEI
-1183#	-1185#	-1186#	0.15	30	S	R	CRC, DEI
-1375#	-1377#	-1378#	0.18	30	S	R	CRC, DEI
-1189#	-1191#	-1192#	0.20	30	S	R	CRC, DEI

-1195#	-1197#	-1198#	0.22	30	S	R	CRC, DEI
-1201#	-1203#	-1204#	0.27	30	S	R	CRC, DEI
-1207#	-1209#	-1210#	0.33	30	S	R	CRC, DEI
		Part Number (M83421/01-XXXX#)					
		Capacitance Tolerance	Capacitance	Rated	Level 1	Level 2	Manufacturer
1.0 %	5.0 %	10.0 %	Value (uF)	Voltage (V)	(FRL)(#)	(FRL)(#)	
-1213#	-1215#	-1216#	0.39	30	S	R	CRC, DEI
-1219#	-1221#	-1222#	0.47	30	S	R	CRC, DEI
-1225#	-1227#	-1228#	0.50	30	S	R	CRC, DEI
-1231#	-1233#	-1234#	0.56	30	S	R	CRC, DEI
-1237#	-1239#	-1240#	0.68	30	S	R	CRC, DEI
-1243#	-1245#	-1246#	0.82	30	S	R	CRC, DEI
-1249#	-1251#	-1252#	1.0	30	S	R	CRC, DEI
-1255#	-1257#	-1258#	1.2	30	S	R	CRC, DEI
-1261#	-1263#	-1264#	1.5	30	S	R	CRC, DEI
-1267#	-1269#	-1270#	1.8	30	S	R	CRC, DEI
-1273#	-1275#	-1276#	2.0	30	S	R	CRC, DEI
-1279#	-1281#	-1282#	2.2	30	S	R	CRC, DEI
-1387#	-1389#	-1390#	2.7	30	S	R	CRC, DEI
-1291#	-1293#	-1294#	3.0	30	S	R	CRC, DEI
-1297#	-1299#	-1300#	3.3	30	S	R	CRC, DEI
-1303#	-1305#	-1306#	3.9	30	S	R	CRC, DEI
-1315#	-1317#	-1318#	4.7	30	S	R	CRC, DEI
-1321#	-1323#	-1324#	5.0	30	S	R	CRC, DEI
		Part Number (M83421/01-XXXX#)					
		Capacitance Tolerance	Capacitance	Rated	Level 1	Level 2	Manufacturer
1.0 %	5.0 %	10.0 %	Value (uF)	Voltage (V)	(FRL)(#)	(FRL)(#)	
-1327#	-1329#	-1330#	5.6	30	S	R	CRC, DEI
-1333#	-1335#	-1336#	6.8	30	S	R	CRC, DEI
-1339#	-1341#	-1342#	8.0	30	S	R	CRC, DEI
-1345#	-1347#	-1348#	8.2	30	S	R	CRC, DEI
-1351#	-1353#	-1354#	10.0	30	S	R	CRC, DEI
-1381#	-1383#	-1384#	12.0	30	S	R	CRC, DEI
-1357#	-1359#	-1360#	15.0	30	S	R	CRC, DEI
-1363#	-1365#	-1366#	20.0	30	S	R	CRC, DEI
-1369#	-1371#	-1372#	22.0	30	S	R	CRC, DEI
		Part Number (M83421/01-XXXX#)					
		Capacitance Tolerance	Capacitance	Rated	Level 1	Level 2	Manufacturer
1.0 %	5.0 %	10.0 %	Value (uF)	Voltage (V)	(FRL)(#)	(FRL)(#)	

CRH02 Plastic Film Capacitors

		Part Number (M83421/01-XXXX#)					
		Capacitance Tolerance	Capacitance	Rated	Level 1	Level 2	Manufacturer
+/- 1.0 %	+/- 5.0 %	+/- 10.0 %	Value (uF)	Voltage (V)	(FRL)(#)	(FRL)(#)	

-2003#	-2005#	-2006#	0.001	50	S	R	CRC, DEI
-2009#	-2011#	-2012#	0.0012	50	S	R	CRC, DEI
-2015#	-2017#	-2018#	0.0015	50	S	R	CRC, DEI
-2021#	-2023#	-2024#	0.0018	50	S	R	CRC, DEI
-2027#	-2029#	-2030#	0.002	50	S	R	CRC, DEI
-2033#	-2035#	-2036#	0.0022	50	S	R	CRC, DEI
-2039#	-2041#	-2042#	0.0027	50	S	R	CRC, DEI
-2045#	-2047#	-2048#	0.0033	50	S	R	CRC, DEI
-2051#	-2053#	-2054#	0.0039	50	S	R	CRC, DEI
-2057#	-2059#	-2060#	0.0047	50	S	R	CRC, DEI
-2063#	-2065#	-2066#	0.005	50	S	R	CRC, DEI
-2069#	-2071#	-2072#	0.0056	50	S	R	CRC, DEI
-2075#	-2077#	-2078#	0.0068	50	S	R	CRC, DEI
-2081#	-2083#	-2084#	0.0082	50	S	R	CRC, DEI
-2087#	-2089#	-2090#	0.01	50	S	R	CRC, DEI
-2093#	-2095#	-2096#	0.012	50	S	R	CRC, DEI
-2099#	-2101#	-2102#	0.015	50	S	R	CRC, DEI
-2105#	-2107#	-2108#	0.018	50	S	R	CRC, DEI
		Part Number (M83421/01-XXXX#)					
		Capacitance Tolerance	Capacitance	Rated	Level 1	Level 2	Manufacturer
+/- 1.0 %	+/- 5.0 %	+/- 10.0 %	Value (uF)	Voltage (V)	(FRL)(#)	(FRL)(#)	
-2111#	-2113#	-2114#	0.02	50	S	R	CRC, DEI
-2117#	-2119#	-2120#	0.022	50	S	R	CRC, DEI
-2123#	-2125#	-2126#	0.027	50	S	R	CRC, DEI
-2129#	-2131#	-2132#	0.033	50	S	R	CRC, DEI
-2135#	-2137#	-2138#	0.039	50	S	R	CRC, DEI
-2141#	-2143#	-2144#	0.047	50	S	R	CRC, DEI
-2147#	-2149#	-2150#	0.050	50	S	R	CRC, DEI
-2153#	-2155#	-2156#	0.056	50	S	R	CRC, DEI
-2159#	-2161#	-2162#	0.068	50	S	R	CRC, DEI
-2165#	-2167#	-2168#	0.082	50	S	R	CRC, DEI
-2171#	-2173#	-2174#	0.10	50	S	R	CRC, DEI
-2177#	-2179#	-2180#	0.12	50	S	R	CRC, DEI
-2183#	-2185#	-2186#	0.15	50	S	R	CRC, DEI
-2189#	-2191#	-2192#	0.18	50	S	R	CRC, DEI
-2195#	-2197#	-2198#	0.20	50	S	R	CRC, DEI
-2201#	-2203#	-2204#	0.22	50	S	R	CRC, DEI
-2207#	-2209#	-2210#	0.27	50	S	R	CRC, DEI
-2213#	-2215#	-2216#	0.33	50	S	R	CRC, DEI
		Part Number (M83421/01-XXXX#)					
		Capacitance Tolerance	Capacitance	Rated	Level 1	Level 2	Manufacturer
+/- 1.0 %	+/- 5.0 %	+/- 10.0 %	Value (uF)	Voltage (V)	(FRL)(#)	(FRL)(#)	
-2219#	-2221#	-2222#	0.39	50	S	R	CRC, DEI
-2225#	-2227#	-2228#	0.47	50	S	R	CRC, DEI
-2231#	-2233#	-2234#	0.50	50	S	R	CRC, DEI
-2237#	-2239#	-2240#	0.56	50	S	R	CRC, DEI
-2243#	-2245#	-2246#	0.68	50	S	R	CRC, DEI

-2249#	-2251#	-2252#	0.82	50	S	R	CRC, DEI
-2255#	-2257#	-2258#	1.0	50	S	R	CRC, DEI
-2261#	-2263#	-2264#	1.2	50	S	R	CRC, DEI
-2267#	-2269#	-2270#	1.5	50	S	R	CRC, DEI
-2273#	-2275#	-2276#	1.8	50	S	R	CRC, DEI
-2279#	-2281#	-2282#	2.0	50	S	R	CRC, DEI
-2285#	-2287#	-2288#	2.2	50	S	R	CRC, DEI
-2291#	-2293#	-2294#	2.7	50	S	R	CRC, DEI
-2297#	-2299#	-2300#	3.0	50	S	R	CRC, DEI
-2303#	-2305#	-2306#	3.3	50	S	R	CRC, DEI
-2309#	-2311#	-2312#	3.9	50	S	R	CRC, DEI
-2321#	-2323#	-2324#	4.7	50	S	R	CRC, DEI
-2327#	-2329#	-2330#	5.0	50	S	R	CRC, DEI
		Part Number (M83421/01-XXXX#)					
		Capacitance Tolerance	Capacitance	Rated	Level 1	Level 2	Manufacturer
+/- 1.0 %	+/- 5.0 %	+/- 10.0 %	Value (uF)	Voltage (V)	(FRL)(#)	(FRL)(#)	
-2333#	-2335#	-2336#	5.6	50	S	R	CRC, DEI
-2339#	-2341#	-2342#	6.8	50	S	R	CRC, DEI
-2345#	-2347#	-2348#	8.0	50	S	R	CRC, DEI
-2351#	-2353#	-2354#	8.2	50	S	R	CRC, DEI
-2357#	-2359#	-2360#	10.0	50	S	R	CRC, DEI
		Part Number (M83421/01-XXXX#)					
		Capacitance Tolerance	Capacitance	Rated	Level 1	Level 2	Manufacturer
+/- 1.0 %	+/- 5.0 %	+/- 10.0 %	Value (uF)	Voltage (V)	(FRL)(#)	(FRL)(#)	

CRH03 Plastic Film Capacitors

		Part Number (M83421/01-XXXX#)					
		Capacitance Tolerance	Capacitance	Rated	Level 1	Level 2	Manufacturer
+/- 1.0 %	+/- 5.0 %	+/- 10.0 %	Value (uF)	Voltage (V)	(FRL)(#)	(FRL)(#)	
-3003#	-3005#	-3006#	0.001	100	S	R	CRC, DEI
-3009#	-3011#	-3012#	0.0012	100	S	R	CRC, DEI
-3015#	-3017#	-3018#	0.0015	100	S	R	CRC, DEI
-3021#	-3023#	-3024#	0.0018	100	S	R	CRC, DEI
-3027#	-3029#	-3030#	0.002	100	S	R	CRC, DEI
-3033#	-3035#	-3036#	0.0022	100	S	R	CRC, DEI
-3039#	-3041#	-3042#	0.0027	100	S	R	CRC, DEI
-3045#	-3047#	-3048#	0.0033	100	S	R	CRC, DEI
-3051#	-3053#	-3054#	0.0039	100	S	R	CRC, DEI
-3057#	-3059#	-3060#	0.0047	100	S	R	CRC, DEI
-3063#	-3065#	-3066#	0.005	100	S	R	CRC, DEI
-3069#	-3071#	-3072#	0.0056	100	S	R	CRC, DEI
-3075#	-3077#	-3078#	0.0068	100	S	R	CRC, DEI
-3081#	-3083#	-3084#	0.0082	100	S	R	CRC, DEI
-3087#	-3089#	-3090#	0.01	100	S	R	CRC, DEI

-3093#	-3095#	-3096#	0.012	100	S	R	CRC, DEI
-3099#	-3101#	-3102#	0.015	100	S	R	CRC, DEI
-3105#	-3107#	-3108#	0.018	100	S	R	CRC, DEI
		Part Number (M83421/01-XXXX#)					
		Capacitance Tolerance	Capacitance	Rated	Level 1	Level 2	Manufacturer
+/- 1.0 %	+/- 5.0 %	+/- 10.0 %	Value (uF)	Voltage (V)	(FRL)(#)	(FRL)(#)	
-3111#	-3113#	-3114#	0.02	100	S	R	CRC, DEI
-3117#	-3119#	-3120#	0.022	100	S	R	CRC, DEI
-3123#	-3125#	-3126#	0.027	100	S	R	CRC, DEI
-3129#	-3131#	-3132#	0.033	100	S	R	CRC, DEI
-3135#	-3137#	-3138#	0.039	100	S	R	CRC, DEI
-3141#	-3143#	-3144#	0.047	100	S	R	CRC, DEI
-3147#	-3149#	-3150#	0.050	100	S	R	CRC, DEI
-3153#	-3155#	-3156#	0.056	100	S	R	CRC, DEI
-3159#	-3161#	-3162#	0.068	100	S	R	CRC, DEI
-3165#	-3167#	-3168#	0.082	100	S	R	CRC, DEI
-3171#	-3173#	-3174#	0.10	100	S	R	CRC, DEI
-3177#	-3179#	-3180#	0.12	100	S	R	CRC, DEI
-3183#	-3185#	-3186#	0.15	100	S	R	CRC, DEI
-3189#	-3191#	-3192#	0.18	100	S	R	CRC, DEI
-3195#	-3197#	-3198#	0.20	100	S	R	CRC, DEI
-3201#	-3203#	-3204#	0.22	100	S	R	CRC, DEI
-3207#	-3209#	-3210#	0.27	100	S	R	CRC, DEI
-3213#	-3215#	-3216#	0.33	100	S	R	CRC, DEI
		Part Number (M83421/01-XXXX#)					
		Capacitance Tolerance	Capacitance	Rated	Level 1	Level 2	Manufacturer
+/- 1.0 %	+/- 5.0 %	+/- 10.0 %	Value (uF)	Voltage (V)	(FRL)(#)	(FRL)(#)	
-3219#	-3221#	-3222#	0.39	100	S	R	CRC, DEI
-3225#	-3227#	-3228#	0.47	100	S	R	CRC, DEI
-3231#	-3233#	-3234#	0.50	100	S	R	CRC, DEI
-3237#	-3239#	-3240#	0.56	100	S	R	CRC, DEI
-3243#	-3245#	-3246#	0.68	100	S	R	CRC, DEI
-3249#	-3251#	-3252#	0.82	100	S	R	CRC, DEI
-3255#	-3257#	-3258#	1.0	100	S	R	CRC, DEI
-3261#	-3263#	-3264#	1.2	100	S	R	CRC, DEI
-3267#	-3269#	-3270#	1.5	100	S	R	CRC, DEI
-3273#	-3275#	-3276#	2.0	100	S	R	CRC, DEI
-3279#	-3281#	-3282#	2.2	100	S	R	CRC, DEI
-3285#	-3287#	-3288#	2.7	100	S	R	CRC, DEI
-3291#	-3293#	-3294#	3.0	100	S	R	CRC, DEI
-3297#	-3299#	-3300#	3.3	100	S	R	CRC, DEI
-3303#	-3305#	-3306#	3.9	100	S	R	CRC, DEI
-3315#	-3317#	-3318#	4.7	100	S	R	CRC, DEI
-3321#	-3323#	-3324#	5.0	100	S	R	CRC, DEI
-3327#	-3329#	-3330#	5.6	100	S	R	CRC, DEI
		Part Number (M83421/01-XXXX#)					
		Capacitance Tolerance	Capacitance	Rated	Level 1	Level 2	Manufacturer

+/- 1.0 %	+/- 5.0 %	+/- 10.0 %	Value (uF)	Voltage (V)	(FRL)(#)	(FRL)(#)	
-3333#	-3335#	-3336#	6.8	100	S	R	CRC, DEI
-3339#	-3341#	-3342#	8.0	100	S	R	CRC, DEI
-3345#	-3347#	-3348#	8.2	100	S	R	CRC, DEI
-3351#	-3353#	-3354#	10.0	100	S	R	CRC, DEI
		Part Number (M83421/01-XXXX#)					
		Capacitance Tolerance	Capacitance	Rated	Level 1	Level 2	Manufacturer
+/- 1.0 %	+/- 5.0 %	+/- 10.0 %	Value (uF)	Voltage (V)	(FRL)(#)	(FRL)(#)	

CRH04 Plastic Film Capacitors

		Part Number (M83421/01-XXXX#)					
		Capacitance Tolerance	Capacitance	Rated	Level 1	Level 2	Manufacturer
+/- 1.0 %	+/- 5.0 %	+/- 10.0 %	Value (uF)	Voltage (V)	(FRL)(#)	(FRL)(#)	
-4003#	-4005#	-4006#	0.001	200	S	R	CRC, DEI
-4009#	-4011#	-4012#	0.0012	200	S	R	CRC, DEI
-4015#	-4017#	-4018#	0.0015	200	S	R	CRC, DEI
-4021#	-4023#	-4024#	0.0018	200	S	R	CRC, DEI
-4027#	-4029#	-4030#	0.002	200	S	R	CRC, DEI
-4033#	-4035#	-4036#	0.0022	200	S	R	CRC, DEI
-4039#	-4041#	-4042#	0.0027	200	S	R	CRC, DEI
-4045#	-4047#	-4048#	0.0033	200	S	R	CRC, DEI
-4051#	-4053#	-4054#	0.0039	200	S	R	CRC, DEI
-4057#	-4059#	-4060#	0.0047	200	S	R	CRC, DEI
-4063#	-4065#	-4066#	0.005	200	S	R	CRC, DEI
-4069#	-4071#	-4072#	0.0056	200	S	R	CRC, DEI
-4075#	-4077#	-4078#	0.0068	200	S	R	CRC, DEI
-4081#	-4083#	-4084#	0.0082	200	S	R	CRC, DEI
-4087#	-4089#	-4090#	0.01	200	S	R	CRC, DEI
-4093#	-4095#	-4096#	0.012	200	S	R	CRC, DEI
-4099#	-4101#	-4102#	0.015	200	S	R	CRC, DEI
-4105#	-4107#	-4108#	0.018	200	S	R	CRC, DEI
		Part Number (M83421/01-XXXX#)					
		Capacitance Tolerance	Capacitance	Rated	Level 1	Level 2	Manufacturer
+/- 1.0 %	+/- 5.0 %	+/- 10.0 %	Value (uF)	Voltage (V)	(FRL)(#)	(FRL)(#)	
-4111#	-4113#	-4114#	0.02	200	S	R	CRC, DEI
-4117#	-4119#	-4120#	0.022	200	S	R	CRC, DEI
-4123#	-4125#	-4126#	0.027	200	S	R	CRC, DEI
-4129#	-4131#	-4132#	0.033	200	S	R	CRC, DEI
-4135#	-4137#	-4138#	0.039	200	S	R	CRC, DEI
-4141#	-4143#	-4144#	0.047	200	S	R	CRC, DEI
-4147#	-4149#	-4150#	0.050	200	S	R	CRC, DEI
-4153#	-4155#	-4156#	0.056	200	S	R	CRC, DEI
-4159#	-4161#	-4162#	0.068	200	S	R	CRC, DEI
-4165#	-4167#	-4168#	0.082	200	S	R	CRC, DEI

-4171#	-4173#	-4174#	0.10	200	S	R	CRC, DEI
-4177#	-4179#	-4180#	0.12	200	S	R	CRC, DEI
-4183#	-4185#	-4186#	0.15	200	S	R	CRC, DEI
-4189#	-4191#	-4192#	0.18	200	S	R	CRC, DEI
-4195#	-4197#	-4198#	0.20	200	S	R	CRC, DEI
-4201#	-4203#	-4204#	0.22	200	S	R	CRC, DEI
-4207#	-4209#	-4210#	0.27	200	S	R	CRC, DEI
-4213#	-4215#	-4216#	0.33	200	S	R	CRC, DEI
		Part Number (M83421/01-XXXX#)					
		Capacitance Tolerance	Capacitance	Rated	Level 1	Level 2	Manufacturer
+/- 1.0 %	+/- 5.0 %	+/- 10.0 %	Value (uF)	Voltage (V)	(FRL)(#)	(FRL)(#)	
-4219#	-4221#	-4222#	0.39	200	S	R	CRC, DEI
-4225#	-4227#	-4228#	0.47	200	S	R	CRC, DEI
-4231#	-4233#	-4234#	0.50	200	S	R	CRC, DEI
-4237#	-4239#	-4240#	0.56	200	S	R	CRC, DEI
-4243#	-4245#	-4246#	0.68	200	S	R	CRC, DEI
-4249#	-4251#	-4252#	0.82	200	S	R	CRC, DEI
-4255#	-4257#	-4258#	1.0	200	S	R	CRC, DEI
-4261#	-4263#	-4264#	1.2	200	S	R	CRC, DEI
-4267#	-4269#	-4270#	1.5	200	S	R	CRC, DEI
-4273#	-4275#	-4276#	1.8	200	S	R	CRC, DEI
-4279#	-4281#	-4282#	2.0	200	S	R	CRC, DEI
-4285#	-4287#	-4288#	2.2	200	S	R	CRC, DEI
-4291#	-4293#	-4294#	2.5	200	S	R	CRC, DEI
-4297#	-4299#	-4300#	2.7	200	S	R	CRC, DEI
-4303#	-4305#	-4306#	3.0	200	S	R	CRC, DEI
-4309#	-4311#	-4312#	3.3	200	S	R	CRC, DEI
-4315#	-4317#	-4318#	3.9	200	S	R	CRC, DEI
		Part Number (M83421/01-XXXX#)					
		Capacitance Tolerance	Capacitance	Rated	Level 1	Level 2	Manufacturer
+/- 1.0 %	+/- 5.0 %	+/- 10.0 %	Value (uF)	Voltage (V)	(FRL)(#)	(FRL)(#)	

CRH05 Plastic Film Capacitors

		Part Number (M83421/01-XXXX#)					
		Capacitance Tolerance	Capacitance	Rated	Level 1	Level 2	Manufacturer
+/- 1.0 %	+/- 5.0 %	+/- 10.0 %	Value (uF)	Voltage (V)	(FRL)(#)	(FRL)(#)	
-5003#	-5005#	-5006#	0.001	400	S	R	CRC, DEI
-5009#	-5011#	-5012#	0.0012	400	S	R	CRC, DEI
-5015#	-5017#	-5018#	0.0015	400	S	R	CRC, DEI
-5021#	-5023#	-5024#	0.0018	400	S	R	CRC, DEI
-5027#	-5029#	-5030#	0.0020	400	S	R	CRC, DEI
-5033#	-5035#	-5036#	0.0022	400	S	R	CRC, DEI
-5039#	-5041#	-5042#	0.0027	400	S	R	CRC, DEI
-5045#	-5047#	-5048#	0.0033	400	S	R	CRC, DEI

-5051#	-5053#	-5054#	0.0039	400	S	R	CRC, DEI
-5057#	-5059#	-5060#	0.0047	400	S	R	CRC, DEI
-5063#	-5065#	-5066#	0.0050	400	S	R	CRC, DEI
-5069#	-5071#	-5072#	0.0056	400	S	R	CRC, DEI
-5075#	-5077#	-5078#	0.0068	400	S	R	CRC, DEI
-5081#	-5083#	-5084#	0.0082	400	S	R	CRC, DEI
-5087#	-5089#	-5090#	0.010	400	S	R	CRC, DEI
-5093#	-5095#	-5096#	0.012	400	S	R	CRC, DEI
-5099#	-5101#	-5102#	0.015	400	S	R	CRC, DEI
-5105#	-5107#	-5108#	0.018	400	S	R	CRC, DEI
		Part Number (M83421/01-XXXX#)					
		Capacitance Tolerance	Capacitance	Rated	Level 1	Level 2	Manufacturer
+/- 1.0 %	+/- 5.0 %	+/- 10.0 %	Value (uF)	Voltage (V)	(FRL)(#)	(FRL)(#)	
-5273#	-5275#	-5276#	0.020	400	S	R	CRC, DEI
-5111#	-5113#	-5114#	0.022	400	S	R	CRC, DEI
-5117#	-5119#	-5120#	0.027	400	S	R	CRC, DEI
-5123#	-5125#	-5126#	0.033	400	S	R	CRC, DEI
-5129#	-5131#	-5132#	0.039	400	S	R	CRC, DEI
-5135#	-5137#	-5138#	0.047	400	S	R	CRC, DEI
-5141#	-5143#	-5144#	0.050	400	S	R	CRC, DEI
-5147#	-5149#	-5150#	0.056	400	S	R	CRC, DEI
-5153#	-5155#	-5156#	0.068	400	S	R	CRC, DEI
-5159#	-5161#	-5162#	0.082	400	S	R	CRC, DEI
-5165#	-5167#	-5168#	0.10	400	S	R	CRC, DEI
-5171#	-5173#	-5174#	0.12	400	S	R	CRC, DEI
-5177#	-5179#	-5180#	0.15	400	S	R	CRC, DEI
-5279#	-5281#	-5282#	0.18	400	S	R	CRC, DEI
-5183#	-5185#	-5186#	0.20	400	S	R	CRC, DEI
-5189#	-5191#	-5192#	0.22	400	S	R	CRC, DEI
-5195#	-5197#	-5198#	0.27	400	S	R	CRC, DEI
-5201#	-5203#	-5204#	0.33	400	S	R	CRC, DEI
		Part Number (M83421/01-XXXX#)					
		Capacitance Tolerance	Capacitance	Rated	Level 1	Level 2	Manufacturer
+/- 1.0 %	+/- 5.0 %	+/- 10.0 %	Value (uF)	Voltage (V)	(FRL)(#)	(FRL)(#)	
-5207#	-5209#	-5210#	0.39	400	S	R	CRC, DEI
-5213#	-5215#	-5216#	0.47	400	S	R	CRC, DEI
-5219#	-5221#	-5222#	0.50	400	S	R	CRC, DEI
-5225#	-5227#	-5228#	0.56	400	S	R	CRC, DEI
-5231#	-5233#	-5234#	0.68	400	S	R	CRC, DEI
-5237#	-5239#	-5240#	0.82	400	S	R	CRC, DEI
-5243#	-5245#	-5246#	1.0	400	S	R	CRC, DEI
-5249#	-5251#	-5252#	1.2	400	S	R	CRC, DEI
-5255#	-5257#	-5258#	1.5	400	S	R	CRC, DEI
-5261#	-5263#	-5264#	1.8	400	S	R	CRC, DEI
-5267#	-5269#	-5270#	2.0	400	S	R	CRC, DEI
		Part Number (M83421/01-XXXX#)					
		Capacitance Tolerance	Capacitance	Rated	Level 1	Level 2	Manufacturer

+/- 1.0 %	+/- 5.0 %	+/- 10.0 %	Value (uF)	Voltage (V)	(FRL)(#)	(FRL)(#)	

Go to -

NEPP

|

NPSL

|

Capacitors

MIL-PRF-87217, CAPACITORS

Fixed, Supermetallized, Plastic Film Dielectric, Direct Current for Low Energy,

High Impedence Applications, Hermetically Sealed in Metal Cases, High Reliability

CHS Styles

Part Number/Ordering Explanation

Important! Application Notes

Revision History for MIL-PRF-87217 Listing in the NPSL

Last Revision: 08/05/99

Click on the link below to see the associated parts selection listing:

Style	Detail Specification	Description
CHS01	MIL-PRF-87217/1	Axial lead, hermetically sealed 0.001 uF to 10 uF (30 V)
CHS02	MIL-PRF-87217/1	Axial lead, hermetically sealed 0.001 uF to 10 uF (50 V)
CHS03	MIL-PRF-87217/1	Axial lead, hermetically sealed 0.001 uF to 10 uF (100 V)

APPLICATION NOTES FOR MIL-PRF-87217

1) To ensure proper "self healing" characteristics of these capacitors, it is recommended that the cirucit in which capacitors of 0.1 uF and greater capacitance are intended for use should be capable of providing at 100 microjoules of energy. This recommendation is based on the "self healing" properties of plastic film capacitors and the need for sufficient energy to be available to promote self healing. Without adequate energy available, self healing will not occur and parts may catastrophically fail short circuit.

2) Parts covered by this specification contain internal soldered connections which may reflow during installation.. The plastic dielectric in these parts is also temperature sensitive. Special precautions such as heat sinking are recommended when soldering onto boards.

Revision History for MIL-PRF-87217 Listing in the NPSL

08/05/99	Changed specification name to "MIL-PRF-87217" rather than "MIL-C-87217" to reference the conversion to performance based specifications
05/01/97	Initial Release of MIL-C-87217 Section in the NPSL

Part Number Ordering Information, example and explanation:

M87217/01-1001A where,

M87217	/01	-1	001
Military Specification Number	Detail Specification Number	Single digit which identifies the capacitor style and rated voltage	Three-digit dash number which uniquely identifies the capacitance, tolerance, a

Part number ordering options are developed using the following criteria:

Style	Rated Voltage
CHS01	30 Vdc
CHS02	50 Vdc
CHS03	100 Vdc

CHS01 Plastic Film Capacitors

					Part Number (M87217/01-XXXX#)					
					Capacitance Tolerance	Cap.	Rated	Config.		
+/- 0.25 %	+/- 0.5 %	+/- 1 %	+/- 2 %	+/- 5 %	+/- 10 %	Value (uF)	Volage (V)	(#)	Level	Manufacturer
-1001#	-1002#	-1003#	-1004#	-1005#	-1006#	0.001	30	A or B	1 or 2	CRC
-1007#	-1008#	-1009#	-1010#	-1011#	-1012#	0.0012	30	A or B	1 or 2	CRC
-1013#	-1014#	-1015#	-1016#	-1017#	-1018#	0.0015	30	A or B	1 or 2	CRC
-1019#	-1020#	-1021#	-1022#	-1023#	-1024#	0.0018	30	A or B	1 or 2	CRC
-1025#	-1026#	-1027#	-1028#	-1029#	-1030#	0.002	30	A or B	1 or 2	CRC
-1031#	-1032#	-1033#	-1034#	-1035#	-1036#	0.0022	30	A or B	1 or 2	CRC
-1037#	-1038#	-1039#	-1040#	-1041#	-1042#	0.0027	30	A or B	1 or 2	CRC
-1043#	-1044#	-1045#	-1046#	-1047#	-1048#	0.0033	30	A or B	1 or 2	CRC
-1049#	-1050#	-1051#	-1052#	-1053#	-1054#	0.0039	30	A or B	1 or 2	CRC
-1055#	-1056#	-1057#	-1058#	-1059#	-1060#	0.0047	30	A or B	1 or 2	CRC
-1061#	-1062#	-1063#	-1064#	-1065#	-1066#	0.005	30	A or B	1 or 2	CRC
-1067#	-1068#	-1069#	-1070#	-1071#	-1072#	0.0056	30	A or B	1 or 2	CRC
-1073#	-1074#	-1075#	-1076#	-1077#	-1078#	0.0068	30	A or B	1 or 2	CRC
-1079#	-1080#	-1081#	-1082#	-1083#	-1084#	0.0082	30	A or B	1 or 2	CRC
-1085#	-1086#	-1087#	-1088#	-1089#	-1090#	0.01	30	A or B	1 or 2	CRC
-1091#	-1092#	-1093#	-1094#	-1095#	-1096#	0.012	30	A or B	1 or 2	CRC
-1097#	-1098#	-1099#	-1100#	-1101#	-1102#	0.015	30	A or B	1 or 2	CRC
-1103#	-1104#	-1105#	-1106#	-1107#	-1108#	0.018	30	A or B	1 or 2	CRC
					Part Number (M87217/01-XXXX#)					
					Capacitance Tolerance	Cap.	Rated	Config.		
+/- 0.25 %	+/- 0.5 %	+/- 1 %	+/- 2 %	+/- 5 %	+/- 10 %	Value (uF)	Volage (V)	(#)	Level	Manufacturer
-1109#	-1110#	-1111#	-1112#	-1113#	-1114#	0.02	30	A or B	1 or 2	CRC
-1115#	-1116#	-1117#	-1118#	-1119#	-1120#	0.022	30	A or B	1 or 2	CRC
-1121#	-1122#	-1123#	-1124#	-1125#	-1126#	0.027	30	A or B	1 or 2	CRC
-1127#	-1128#	-1129#	-1130#	-1131#	-1132#	0.033	30	A or B	1 or 2	CRC
-1133#	-1134#	-1135#	-1136#	-1137#	-1138#	0.039	30	A or B	1 or 2	CRC
-1139#	-1140#	-1141#	-1142#	-1143#	-1144#	0.047	30	A or B	1 or 2	CRC
-1145#	-1146#	-1147#	-1148#	-1149#	-1150#	0.050	30	A or B	1 or 2	CRC
-1151#	-1152#	-1153#	-1154#	-1155#	-1156#	0.056	30	A or B	1 or 2	CRC
-1157#	-1158#	-1159#	-1160#	-1161#	-1162#	0.068	30	A or B	1 or 2	CRC
-1163#	-1164#	-1165#	-1166#	-1167#	-1168#	0.082	30	A or B	1 or 2	CRC

-1169#	-1170#	-1171#	-1172#	-1173#	-1174#	0.10	30	A or B	1 or 2	CRC
-1175#	-1176#	-1177#	-1178#	-1179#	-1180#	0.12	30	A or B	1 or 2	CRC
-1181#	-1182#	-1183#	-1184#	-1185#	-1186#	0.15	30	A or B	1 or 2	CRC
-1373#	-1374#	-1375#	-1376#	-1377#	-1378#	0.18	30	A or B	1 or 2	CRC
-1187#	-1188#	-1189#	-1190#	-1191#	-1192#	0.20	30	A or B	1 or 2	CRC
-1193#	-1194#	-1195#	-1196#	-1197#	-1198#	0.22	30	A or B	1 or 2	CRC
-1199#	-1200#	-1201#	-1202#	-1203#	-1204#	0.27	30	A or B	1 or 2	CRC
-1205#	-1206#	-1207#	-1208#	-1209#	-1210#	0.33	30	A or B	1 or 2	CRC
					Part Number (M87217/01-XXXX#)					
					Capacitance Tolerance	Cap.	Rated	Config.		
+/- 0.25 %	+/- 0.5 %	+/- 1 %	+/- 2 %	+/- 5 %	+/- 10 %	Value (uF)	Volage (V)	(#)	Level	Manufacturer
-1211#	-1212#	-1213#	-1214#	-1215#	-1216#	0.39	30	A or B	1 or 2	CRC
-1217#	-1218#	-1219#	-1220#	-1221#	-1222#	0.47	30	A or B	1 or 2	CRC
-1223#	-1224#	-1225#	-1226#	-1227#	-1228#	0.50	30	A or B	1 or 2	CRC
-1229#	-1230#	-1231#	-1232#	-1233#	-1234#	0.56	30	A or B	1 or 2	CRC
-1235#	-1236#	-1237#	-1238#	-1239#	-1240#	0.68	30	A or B	1 or 2	CRC
-1241#	-1242#	-1243#	-1244#	-1245#	-1246#	0.82	30	A or B	1 or 2	CRC
-1247#	-1248#	-1249#	-1250#	-1251#	-1252#	1.0	30	A or B	1 or 2	CRC
-1253#	-1254#	-1255#	-1256#	-1257#	-1258#	1.2	30	A or B	1 or 2	CRC
-1259#	-1260#	-1261#	-1262#	-1263#	-1264#	1.5	30	A or B	1 or 2	CRC
-1265#	-1266#	-1267#	-1268#	-1269#	-1270#	1.8	30	A or B	1 or 2	CRC
-1271#	-1272#	-1273#	-1274#	-1275#	-1276#	2.0	30	A or B	1 or 2	CRC
-1277#	-1278#	-1279#	-1280#	-1281#	-1282#	2.2	30	A or B	1 or 2	CRC
-1385#	-1386#	-1387#	-1388#	-1389#	-1390#	2.7	30	A or B	1 or 2	CRC
-1289#	-1290#	-1291#	-1292#	-1293#	-1294#	3.0	30	A or B	1 or 2	CRC
-1295#	-1296#	-1297#	-1298#	-1299#	-1300#	3.3	30	A or B	1 or 2	CRC
-1301#	-1302#	-1303#	-1304#	-1305#	-1306#	3.9	30	A or B	1 or 2	CRC
-1313#	-1314#	-1315#	-1316#	-1317#	-1318#	4.7	30	A or B	1 or 2	CRC
-1319#	-1320#	-1321#	-1322#	-1323#	-1324#	5.0	30	A or B	1 or 2	CRC
					Part Number (M87217/01-XXXX#)					
					Capacitance Tolerance	Cap.	Rated	Config.		
+/- 0.25 %	+/- 0.5 %	+/- 1 %	+/- 2 %	+/- 5 %	+/- 10 %	Value (uF)	Volage (V)	(#)	Level	Manufacturer
-1325#	-1326#	-1327#	-1328#	-1329#	-1330#	5.6	30	A or B	1 or 2	CRC
-1331#	-1332#	-1333#	-1334#	-1335#	-1336#	6.8	30	A or B	1 or 2	CRC
-1337#	-1338#	-1339#	-1340#	-1341#	-1342#	8.0	30	A or B	1 or 2	CRC
-1343#	-1344#	-1345#	-1346#	-1347#	-1348#	8.2	30	A or B	1 or 2	CRC
-1349#	-1350#	-1351#	-1352#	-1353#	-1354#	10.0	30	A or B	1 or 2	CRC
					Part Number (M87217/01-XXXX#)					
					Capacitance Tolerance	Cap.	Rated	Config.		
+/- 0.25 %	+/- 0.5 %	+/- 1 %	+/- 2 %	+/- 5 %	+/- 10 %	Value (uF)	Volage (V)	(#)	Level	Manufacturer

CHS02 Plastic Film Capacitors

					Part Number (M87217/01-XXXX#)					
					Capacitance Tolerance	Cap.	Rated	Config.		

+/- 0.25 %	+/- 0.5 %	+/- 1 %	+/- 2 %	+/- 5 %	+/- 10 %	Value (uF)	Volage (V)	(#)	Level	Manufacturer
-2001#	-2002#	-2003#	-2004#	-2005#	-2006#	0.001	50	A or B	1 or 2	CRC
-2007#	-2008#	-2009#	-2010#	-2011#	-2012#	0.0012	50	A or B	1 or 2	CRC
-2013#	-2014#	-2015#	-2016#	-2017#	-2018#	0.0015	50	A or B	1 or 2	CRC
-2019#	-2020#	-2021#	-2022#	-2023#	-2024#	0.0018	50	A or B	1 or 2	CRC
-2025#	-2026#	-2027#	-2028#	-2029#	-2030#	0.002	50	A or B	1 or 2	CRC
-2031#	-2032#	-2033#	-2034#	-2035#	-2036#	0.0022	50	A or B	1 or 2	CRC
-2037#	-2038#	-2039#	-2040#	-2041#	-2042#	0.0027	50	A or B	1 or 2	CRC
-2043#	-2044#	-2045#	-2046#	-2047#	-2048#	0.0033	50	A or B	1 or 2	CRC
-2049#	-2050#	-2051#	-2052#	-2053#	-2054#	0.0039	50	A or B	1 or 2	CRC
-2055#	-2056#	-2057#	-2058#	-2059#	-2060#	0.0047	50	A or B	1 or 2	CRC
-2061#	-2062#	-2063#	-2064#	-2065#	-2066#	0.005	50	A or B	1 or 2	CRC
-2067#	-2068#	-2069#	-2070#	-2071#	-2072#	0.0056	50	A or B	1 or 2	CRC
-2073#	-2074#	-2075#	-2076#	-2077#	-2078#	0.0068	50	A or B	1 or 2	CRC
-2079#	-2080#	-2081#	-2082#	-2083#	-2084#	0.0082	50	A or B	1 or 2	CRC
-2085#	-2086#	-2087#	-2088#	-2089#	-2090#	0.01	50	A or B	1 or 2	CRC
-2091#	-2092#	-2093#	-2094#	-2095#	-2096#	0.012	50	A or B	1 or 2	CRC
-2097#	-2098#	-2099#	-2100#	-2101#	-2102#	0.015	50	A or B	1 or 2	CRC
-2103#	-2104#	-2105#	-2106#	-2107#	-2108#	0.018	50	A or B	1 or 2	CRC
					Part Number (M87217/01-XXXX#)					
					Capacitance Tolerance	Cap.	Rated	Config.		
+/- 0.25 %	+/- 0.5 %	+/- 1 %	+/- 2 %	+/- 5 %	+/- 10 %	Value (uF)	Volage (V)	(#)	Level	Manufacturer
-2109#	-2110#	-2111#	-2112#	-2113#	-2114#	0.02	50	A or B	1 or 2	CRC
-2115#	-2116#	-2117#	-2118#	-2119#	-2120#	0.022	50	A or B	1 or 2	CRC
-2121#	-2122#	-2123#	-2124#	-2125#	-2126#	0.027	50	A or B	1 or 2	CRC
-2127#	-2128#	-2129#	-2130#	-2131#	-2132#	0.033	50	A or B	1 or 2	CRC
-2133#	-2134#	-2135#	-2136#	-2137#	-2138#	0.039	50	A or B	1 or 2	CRC
-2139#	-2140#	-2141#	-2142#	-2143#	-2144#	0.047	50	A or B	1 or 2	CRC
-2145#	-2146#	-2147#	-2148#	-2149#	-2150#	0.050	50	A or B	1 or 2	CRC
-2151#	-2152#	-2153#	-2154#	-2155#	-2156#	0.056	50	A or B	1 or 2	CRC
-2157#	-2158#	-2159#	-2160#	-2161#	-2162#	0.068	50	A or B	1 or 2	CRC
-2163#	-2164#	-2165#	-2166#	-2167#	-2168#	0.082	50	A or B	1 or 2	CRC
-2169#	-2170#	-2171#	-2172#	-2173#	-2174#	0.1	50	A or B	1 or 2	CRC
-2175#	-2176#	-2177#	-2178#	-2179#	-2180#	0.12	50	A or B	1 or 2	CRC
-2181#	-2182#	-2183#	-2184#	-2185#	-2186#	0.15	50	A or B	1 or 2	CRC
-2187#	-2188#	-2189#	-2190#	-2191#	-2192#	0.18	50	A or B	1 or 2	CRC
-2193#	-2194#	-2195#	-2196#	-2197#	-2198#	0.20	50	A or B	1 or 2	CRC
-2199#	-2200#	-2201#	-2202#	-2203#	-2204#	0.22	50	A or B	1 or 2	CRC
-2205#	-2206#	-2207#	-2208#	-2209#	-2210#	0.27	50	A or B	1 or 2	CRC
-2211#	-2212#	-2213#	-2214#	-2215#	-2216#	0.33	50	A or B	1 or 2	CRC
					Part Number (M87217/01-XXXX#)					
					Capacitance Tolerance	Cap.	Rated	Config.		
+/- 0.25 %	+/- 0.5 %	+/- 1 %	+/- 2 %	+/- 5 %	+/- 10 %	Value (uF)	Volage (V)	(#)	Level	Manufacturer
-2217#	-2218#	-2219#	-2220#	-2221#	-2222#	0.39	50	A or B	1 or 2	CRC
-2223#	-2224#	-2225#	-2226#	-2227#	-2228#	0.47	50	A or B	1 or 2	CRC
-2229#	-2230#	-2231#	-2232#	-2233#	-2234#	0.50	50	A or B	1 or 2	CRC
-2235#	-2236#	-2237#	-2238#	-2239#	-2240#	0.56	50	A or B	1 or 2	CRC

-2241#	-2242#	-2243#	-2244#	-2245#	-2246#	0.68	50	A or B	1 or 2	CRC
-2247#	-2248#	-2249#	-2250#	-2251#	-2252#	0.82	50	A or B	1 or 2	CRC
-2253#	-2254#	-2255#	-2256#	-2257#	-2258#	1.0	50	A or B	1 or 2	CRC
-2259#	-2260#	-2261#	-2262#	-2263#	-2264#	1.2	50	A or B	1 or 2	CRC
-2265#	-2266#	-2267#	-2268#	-2269#	-2270#	1.5	50	A or B	1 or 2	CRC
-2271#	-2272#	-2273#	-2274#	-2275#	-2276#	1.8	50	A or B	1 or 2	CRC
-2277#	-2278#	-2279#	-2280#	-2281#	-2282#	2.0	50	A or B	1 or 2	CRC
-2283#	-2284#	-2285#	-2286#	-2287#	-2288#	2.2	50	A or B	1 or 2	CRC
-2289#	-2290#	-2291#	-2292#	-2293#	-2294#	2.7	50	A or B	1 or 2	CRC
-2295#	-2296#	-2297#	-2298#	-2299#	-2300#	3.0	50	A or B	1 or 2	CRC
-2301#	-2302#	-2303#	-2304#	-2305#	-2306#	3.3	50	A or B	1 or 2	CRC
-2307#	-2308#	-2309#	-2310#	-2311#	-2312#	3.9	50	A or B	1 or 2	CRC
-2319#	-2320#	-2321#	-2322#	-2323#	-2324#	4.7	50	A or B	1 or 2	CRC
-2325#	-2326#	-2327#	-2328#	-2329#	-2330#	5.0	50	A or B	1 or 2	CRC
					Part Number (M87217/01-XXXX#)					
					Capacitance Tolerance	Cap.	Rated	Config.		
+/- 0.25 %	+/- 0.5 %	+/- 1 %	+/- 2 %	+/- 5 %	+/- 10 %	Value (uF)	Volage (V)	(#)	Level	Manufacturer
-2331#	-2332#	-2333#	-2334#	-2335#	-2336#	5.6	50	A or B	1 or 2	CRC
-2337#	-2338#	-2339#	-2340#	-2341#	-2342#	6.8	50	A or B	1 or 2	CRC
-2343#	-2344#	-2345#	-2346#	-2347#	-2348#	8.0	50	A or B	1 or 2	CRC
-2349#	-2350#	-2351#	-2352#	-2353#	-2354#	8.2	50	A or B	1 or 2	CRC
-2355#	-2356#	-2357#	-2358#	-2359#	-2360#	10.0	50	A or B	1 or 2	CRC
					Part Number (M87217/01-XXXX#)					
					Capacitance Tolerance	Cap.	Rated	Config.		
+/- 0.25 %	+/- 0.5 %	+/- 1 %	+/- 2 %	+/- 5 %	+/- 10 %	Value (uF)	Volage (V)	(#)	Level	Manufacturer

CHS03 Plastic Film Capacitors

					Part Number (M87217/01-XXXX#)					
					Capacitance Tolerance	Cap.	Rated	Config.		
+/-0.25 %	+/-0.5 %	+/- 1 %	+/- 2 %	+/- 5 %	+/- 10 %	Value (uF)	Volage (V)	(#)	Level	Manufacturer
-3001#	-3002#	-3003#	-3004#	-3005#	-3006#	0.001	100	A or B	1 or 2	CRC
-3007#	-3008#	-3009#	-3010#	-3011#	-3012#	0.0012	100	A or B	1 or 2	CRC
-3013#	-3014#	-3015#	-3016#	-3017#	-3018#	0.0015	100	A or B	1 or 2	CRC
-3019#	-3020#	-3021#	-3022#	-3023#	-3024#	0.0018	100	A or B	1 or 2	CRC
-3025#	-3026#	-3027#	-3028#	-3029#	-3030#	0.002	100	A or B	1 or 2	CRC
-3031#	-3032#	-3033#	-3034#	-3035#	-3036#	0.0022	100	A or B	1 or 2	CRC
-3037#	-3038#	-3039#	-3040#	-3041#	-3042#	0.0027	100	A or B	1 or 2	CRC
-3043#	-3044#	-3045#	-3046#	-3047#	-3048#	0.0033	100	A or B	1 or 2	CRC
-3049#	-3050#	-3051#	-3052#	-3053#	-3054#	0.0039	100	A or B	1 or 2	CRC
-3055#	-3056#	-3057#	-3058#	-3059#	-3060#	0.0047	100	A or B	1 or 2	CRC
-3061#	-3062#	-3063#	-3064#	-3065#	-3066#	0.005	100	A or B	1 or 2	CRC
-3067#	-3068#	-3069#	-3070#	-3071#	-3072#	0.0056	100	A or B	1 or 2	CRC
-3073#	-3074#	-3075#	-3076#	-3077#	-3078#	0.0068	100	A or B	1 or 2	CRC
-3079#	-3080#	-3081#	-3082#	-3083#	-3084#	0.0082	100	A or B	1 or 2	CRC

-3085#	-3086#	-3087#	-3088#	-3089#	-3090#	0.010	100	A or B	1 or 2	CRC
-3091#	-3092#	-3093#	-3094#	-3095#	-3096#	0.012	100	A or B	1 or 2	CRC
-3097#	-3098#	-3099#	-3100#	-3101#	-3102#	0.015	100	A or B	1 or 2	CRC
-3103#	-3104#	-3105#	-3106#	-3107#	-3108#	0.018	100	A or B	1 or 2	CRC
					Part Number (M87217/01-XXXX#)					
					Capacitance Tolerance	Cap.	Rated	Config.		
+/-0.25 %	+/-0.5 %	+/- 1 %	+/- 2 %	+/- 5 %	+/- 10 %	Value (uF)	Volage (V)	(#)	Level	Manufacturer
-3109#	-3110#	-3111#	-3112#	-3113#	-3114#	0.020	100	A or B	1 or 2	CRC
-3115#	-3116#	-3117#	-3118#	-3119#	-3120#	0.022	100	A or B	1 or 2	CRC
-3121#	-3122#	-3123#	-3124#	-3125#	-3126#	0.027	100	A or B	1 or 2	CRC
-3127#	-3128#	-3129#	-3130#	-3131#	-3132#	0.033	100	A or B	1 or 2	CRC
-3133#	-3134#	-3135#	-3136#	-3137#	-3138#	0.039	100	A or B	1 or 2	CRC
-3139#	-3140#	-3141#	-3142#	-3143#	-3144#	0.047	100	A or B	1 or 2	CRC
-3145#	-3146#	-3147#	-3148#	-3149#	-3150#	0.050	100	A or B	1 or 2	CRC
-3151#	-3152#	-3153#	-3154#	-3155#	-3156#	0.056	100	A or B	1 or 2	CRC
-3157#	-3158#	-3159#	-3160#	-3161#	-3162#	0.068	100	A or B	1 or 2	CRC
-3163#	-3164#	-3165#	-3166#	-3167#	-3168#	0.082	100	A or B	1 or 2	CRC
-3169#	-3170#	-3171#	-3172#	-3173#	-3174#	0.10	100	A or B	1 or 2	CRC
-3175#	-3176#	-3177#	-3178#	-3179#	-3180#	0.12	100	A or B	1 or 2	CRC
-3181#	-3182#	-3183#	-3184#	-3185#	-3186#	0.15	100	A or B	1 or 2	CRC
-3187#	-3188#	-3189#	-3190#	-3191#	-3192#	0.18	100	A or B	1 or 2	CRC
-3193#	-3194#	-3195#	-3196#	-3197#	-3198#	0.20	100	A or B	1 or 2	CRC
-3199#	-3200#	-3201#	-3202#	-3203#	-3204#	0.22	100	A or B	1 or 2	CRC
-3205#	-3206#	-3207#	-3208#	-3209#	-3210#	0.27	100	A or B	1 or 2	CRC
-3211#	-3212#	-3213#	-3214#	-3215#	-3216#	0.33	100	A or B	1 or 2	CRC
					Part Number (M87217/01-XXXX#)					
					Capacitance Tolerance	Cap.	Rated	Config.		
+/-0.25 %	+/-0.5 %	+/- 1 %	+/- 2 %	+/- 5 %	+/- 10 %	Value (uF)	Volage (V)	(#)	Level	Manufacturer
-3217#	-3218#	-3219#	-3220#	-3221#	-3222#	0.39	100	A or B	1 or 2	CRC
-3223#	-3224#	-3225#	-3226#	-3227#	-3228#	0.47	100	A or B	1 or 2	CRC
-3229#	-3230#	-3231#	-3232#	-3233#	-3234#	0.50	100	A or B	1 or 2	CRC
-3235#	-3236#	-3237#	-3238#	-3239#	-3240#	0.56	100	A or B	1 or 2	CRC
-3241#	-3242#	-3243#	-3244#	-3245#	-3246#	0.68	100	A or B	1 or 2	CRC
-3247#	-3248#	-3249#	-3250#	-3251#	-3252#	0.82	100	A or B	1 or 2	CRC
-3253#	-3254#	-3255#	-3256#	-3257#	-3258#	1.0	100	A or B	1 or 2	CRC
-3259#	-3260#	-3261#	-3262#	-3263#	-3264#	1.2	100	A or B	1 or 2	CRC
-3265#	-3266#	-3267#	-3268#	-3269#	-3270#	1.5	100	A or B	1 or 2	CRC
-3271#	-3272#	-3273#	-3274#	-3275#	-3276#	2.0	100	A or B	1 or 2	CRC
-3277#	-3278#	-3279#	-3280#	-3281#	-3282#	2.2	100	A or B	1 or 2	CRC
-3283#	-3284#	-3285#	-3286#	-3287#	-3288#	2.7	100	A or B	1 or 2	CRC
-3289#	-3290#	-3291#	-3292#	-3293#	-3294#	3.0	100	A or B	1 or 2	CRC
-3295#	-3296#	-3297#	-3298#	-3299#	-3300#	3.3	100	A or B	1 or 2	CRC
-3301#	-3302#	-3303#	-3304#	-3305#	-3306#	3.9	100	A or B	1 or 2	CRC
-3313#	-3314#	-3315#	-3316#	-3317#	-3318#	4.7	100	A or B	1 or 2	CRC
-3319#	-3320#	-3321#	-3322#	-3323#	-3324#	5.0	100	A or B	1 or 2	CRC
-3325#	-3326#	-3327#	-3328#	-3329#	-3330#	5.6	100	A or B	1 or 2	CRC
					Part Number (M87217/01-XXXX#)					

					Capacitance Tolerance	Cap.	Rated	Config.		
+/-0.25 %	+/-0.5 %	+/- 1 %	+/- 2 %	+/- 5 %	+/- 10 %	Value (uF)	Volage (V)	(#)	Level	Manufacturer
-3331#	-3332#	-3333#	-3334#	-3335#	-3336#	6.8	100	A or B	1 or 2	CRC
-3337#	-3338#	-3339#	-3340#	-3341#	-3342#	8.0	100	A or B	1 or 2	CRC
-3343#	-3344#	-3345#	-3346#	-3347#	-3348#	8.2	100	A or B	1 or 2	CRC
-3349#	-3350#	-3351#	-3352#	-3353#	-3354#	10.0	100	A or B	1 or 2	CRC

Active Parts Core Suppliers List (CSL)

The Active Parts Core Suppliers Listing (CSL) is a listing of manufacturers who are considered preferred suppliers of monolithic microcircuits, hybrid microcircuits, transistors or diodes by NASA. The CSL consists of two parts:

Core Suppliers List Part I

Introduction Section I - Microcircuits Section II - Hybrids Section III - Diodes Section IV - Transistors

Core Suppliers List Part II

Japanese Space Agency (NASDA) Listings European Space Agency (ESA) Listings

NOTE: A Portable Document Format (PDF) reader will be needed to view the CSL files on this page. A PDF reader, along with installation instructions, can be obtained free from Adobe Systems Incorporated.

Part I follows, and includes only those suppliers who satisfy the following criteria:

Are listed in QML-38535 (Qualified Manufacturers List of Advanced Microcircuits Qualified Under Military Specification MIL-PRF-38535?), QML-38534 (?Qualified Manufacturers List of Custom Hybrid Microcircuits Qualified under Military Specification List of Custom Hybrid Microcircuits Qualified under Military Specification MIL-H-38534?) or QPL-19500 (?Qualified Products List of Products Qualified under Military Specification MIL-S-19500) Offer one or more products which are currently listed in either MIL-STD-975 or the GSFC PPL Offer QML/QPL products to quality assurance levels which are considered suitable for spaceflight use Have established a history of providing high reliability parts to NASA.

The CSL, Part II, includes active part suppliers, who are not necessarily QML/QPL-certified, but who satisfy the following criteria:

Manufacturers parts on DESC certified and qualified lines Have compiled a satisfactory history of supplying high reliability parts which are currently procured through contractor (or OEM) SCDs Manufacture parts to NASA specifications Are certified and qualified by ESA/NASDA to provide parts to ESA/SCC or NASDA specifications)

The CSL is intended to assist NASA project management, parts/reliability engineers and designers in avoiding EEE part reliability/mission schedule problems which can result when parts are procured from unproven suppliers or suppliers who show recent trends indicative of unsatisfactory performance.

For each manufacturer listed in the CSL, Part I, herein, there is accompanying information related to the processing technologies and product lines for which the manufacturer is considered a core supplier and the name/phone number of a company representative to whom questions may be directed.

The information described in this report was obtained from NASA GSFC Preferred Parts List (PPL-21), NASA Standard Electrical, Electronic and Electromechanical parts list (MIL-STD-975), Qualified Manufacturers List for Monolithic Microcircuits (QML-38535), Qualified Manufacturers list for Custom Hybrid Microcircuits (QML- 38534), and Qualified Products List for Diodes and Transistors (QPL-19500).

For convenience, the listings have been grouped by part commodity. Introductory remarks for each section provide an explanation of the information contained therein. Please note that the manufacturer's listing and the accompanying information are considered accurate at the time of issue of this document. However, the semiconductor industry is one known for rapid change of technology and development including fabrication processes and assembly locations. As a result, the listings are subject to change without notice; revisions or amendments will be issued, as necessary.

For additional information regarding this Core Suppliers Listing, please contact:

Ashok Sharma NASA Goddard Space Flight Center Greenbelt, Maryland 20771 Attn: Ashok Sharma (Active Parts Specialist Code 562) (301) 286-6165 (301) 286-1695 (fax)

Appendix A Derating Criteria

Under Construction.

Appendix B Additional Parts Information Links

Listed below are some useful Links to other data sites that can be used in obtaining additional part related information:

NASA Parts and Packaging Program (NPPP)

Site managed by the Jet Propulsion Laboratory (JPL) -- This Site Contains Electronic Parts Reliability Information Studies of Emerging Microelectronics Technologies Radiation Effects Information JPL's Electronic Parts Information Network System (EPINS)

Electronic Parts Information Management System (EPIMS) User ID/Password Controlled -- This Site Contains GIDEP Alerts GSFC Parts Analysis Web System (PAWS) NASA Parts Advisories NASA Project Parts Lists Nonstandard Part Approval Requests Manufacturer CAGE code/address look up

GSFC SEU Radiation Data Bank

JPL's Radiation Data Bank

GSFC Procurement Specifications

Appendix C Prohibited Materials Section

The following section of the NASA Parts Selection List (NPSL) has been developed to identify materials often used in the manufacture and assembly of EEE parts that shall be prohibited from use in high reliability NASA electronic systems and flight hardware. Users are strongly urged to familiarize themselves with these issues to minimize the risk of introducing potential problems. In addition to the issues noted in this section, each commodity section within the NPSL has application notes that are unique to the commodity. Therefore, users should also review the application notes contained in each commodity section.

1. Pure Tin Plating 2. Cadmium Plating 3. Zinc Plating

Pure Tin Plating Prohibition

Policy:

Pure tin plating is prohibited as a final finish on EEE parts and associated hardware

Reference:

NASA Advisory NA-044 October 23, 1998 NASA Advisory NA-044A December 17, 1998 NASA GSFC Tin Whisker Homepage

Rationale:

Pure tin finishes are susceptible to the spontaneous growth of electrically conductive single crystal structures known as tin whiskers. Over time these whiskers may grow to be several millimeters (mm) long. Tin whiskers are capable of causing electrical failures ranging from parametric deviations to sustained plasma arcing (in vacuum) that can result in catastrophic short circuits.

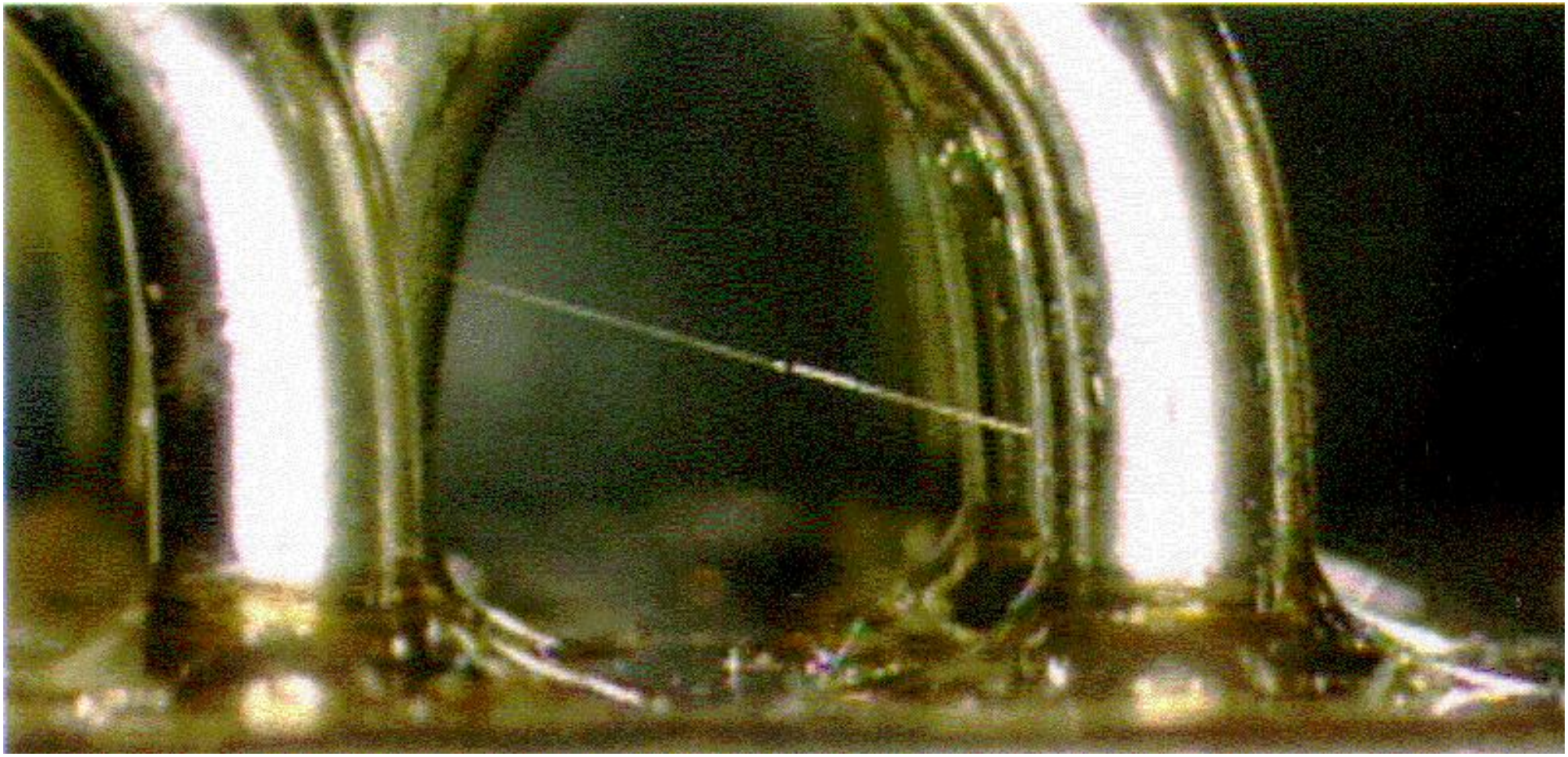

An Example of a Tin Whisker

Several instances have been reported where tin whiskers have caused system failures in both earth and space-based applications including at least 3 reports where a tin whisker induced short circuit resulted in complete failure of the commercial satellite.

The general risks fall into four categories:

Stable short circuits in low voltage, high impedance circuits.In such circuits there may be insufficient current available to fuse the whisker open and a stable short circuit results. Depending on the diameter and length of the whisker, it can take more than 50 milliamps (mA) to fuse one open. More typical is ~10mA Transient short circuits. At atmospheric pressure, if the available current exceeds the fusing current of the whisker, the circuit may only experience a transient glitch as the whisker fuses open. Plasma arcing in vacuum.In vacuum a much more destructive phenomenon can occur. If currents of above a few amps are available, the whisker will fuse open but the vaporized tin may initiate a plasma that can conduct over 200 amps. An adequate supply of tin from the plated surface is necessary to sustain the arc. This phenomenon is reported to have occurred on several commercial satellites resulting in blown fuses that rendered the spacecraft non-operational. Debris/Contamination.Whiskers or parts of whiskers may break loose and bridge isolated conductors or interfere with optical surfaces

Recommendations:

At this time, the only sure way of avoiding tin whiskers is not to use parts plated with pure tin. Despite procurement specification requirements that prohibit pure tin, errors sometimes occur resulting in pure tin plated components being delivered. Therefore, users are advised to independently test and analyze the plating composition of the products received as a verification that pure tin plating is not in use. Simple visual inspection is generally not sufficient because pure tin plating may appear similar to other plated finishes such as tin/lead or nickel.

Utilization of procurement specifications that have clear restrictions against the use of pure tin plating is still recommended. Most, but not all, of the commonly used military specifications currently have prohibitions against pure tin plating. Studies have shown that alloying tin with a second metal reduces the propensity for whisker growth. Alloys of tin and lead are acceptable where the alloy contains a minimum of 3% lead by weight.

In the event pure tin plated parts cannot be avoided, there are some additional processing techniques that may be used to reduce but not eliminate the risks associated with tin whiskers. The effectiveness of these approaches is variable and most require further evaluation to determine their suitability for long duration missions. Examples of these approaches include:

Solder dipping pure tin plated terminations and leads using a leaded solder. The effectiveness of this approach at covering all pure tin plated surfaces can be variable. Application of conformal coat material to pure tin plated surfaces. Conformal coat appears to reduce the growth rate of tin whiskers, but whiskers are still capable of growing through some conformal coat materials such as polyurethanes. For some device types manufacturers may be willing to replate surfaces using finishes such as tin/lead or nickel which are substantially less prone to whisker formation.

Cadmium Plating Prohibition

Policy:

Cadmium plating is prohibited on EEE parts and associated hardware. In some applications use of Cadmium plating may be acceptable via a Project approved waiver process that includes review and approval by both Materials and Parts Engineering disciplines.

Reference:

MSFC-HDBK-527, Materials Selection List for Space Hardware Systems JSC 11123, Space Transportation System Payload Safety Guidelines Handbook

Rationale:

There are several reasons for prohibiting the use of Cadmium plating in space flight electronic systems.

Cadmium is known to sublimate in a hard vacuum environment (especially at temperatures above 75°C). The sublimation products, which are conductive, can redeposit resulting in short circuits. The sublimation products may also interfere with sensitive optics. Cadmium is a toxic material that should not be used in manned spaceflight applications Cadmium is subject to the spontaneous growth of Cadmium whiskers. The propensity of Cadmium to grow whiskers

appears to be lower than that of zinc and especially tin. Cadmium whiskers (like tin whiskers) grow spontaneously and are capable of causing electrical failures ranging from parametric deviations to sustained plasma arcing that can result in catastrophic short circuits. See prohibition against pure tin plating for additional insight regarding the risks of metal whiskers.

Recommendations:

Cadmium plating is commonly used on connectors, connector hardware and mechanical hardware such as fasteners. It provides excellent resistance to salt corrosion and is therefore offered in many military specifications predominantly for use in naval applications. However, most NASA applications are not concerned with salt corrosion and the risks associated with use of Cadmium plating noted above outweigh the benefits of its use in spaceflight applications. There are several alternatives to Cadmium plating that are suited for spaceflight use. For connectors, electroless nickel plating is preferred. Gold plating is preferred when the application requires additional shielding effectiveness or low residual magnetism. Passivated stainless steel is the preferred material for hardware items such as fasteners. Consult your materials or parts specialists for suggested alternatives to Cadmium plating.

Zinc Plating Prohibition

Policy:

Zinc plating is prohibited on EEE parts and associated hardware. In some applications use of Zinc plating may be acceptable via a Project approved waiver process that includes review and approval by both Materials and Parts Engineering disciplines.

Reference: NA

Rationale:

There are several reasons for prohibiting the use of Zinc plating in space flight electronic systems.

Zinc is known to sublimate in a vacuum environment (especially at elevated temperatures). The sublimation products are conductive and can result in short circuits. Zinc is subject to the spontaneous growth of Zinc whiskers. Zinc whiskers (like tin whiskers) grow spontaneously and are capable of causing electrical failures ranging from parametric deviations to sustained plasma arcing that can result in catastrophic short circuits. See prohibition against pure tin plating for additional insight regarding the risks of metal whiskers

Recommendations:

Zinc (galvanized) plating is occasionally used on mechanical hardware such as fasteners for its corrosion resistant properties. By using alternative plating materials most NASA applications can avoid the risks associated with the use of Zinc plating while still achieving suitable corrosion resistance. Consult your materials or parts specialists for suggested alternatives to Zinc plating.