Table of Contents

Introduction

1.0 Foreword

2.0 About this document

3.0 Using this document

4.0 General Requirements

Parts Selection

Capacitors

Circuit Protection Devices

Fuses

Connectors

Filters

Inductors

Microcircuits

Monolithics

Hybrids

Resistors

Semiconductors (Summary)

Diodes

Transistors

Thermistors

Wire and Cable

Appendices

A - Derating Guidelines

B - Additional Parts Information Links

C - Prohibited Materials

1.0 FOREWORD

The NASA EEE Parts Selection List (NPSL) has been developed as a "parts selection tool" specifically geared toward design and parts engineering organizations internal to NASA and to universities and original equipment manufacturers (OEMs) that do not have the resources for a dedicated quality and reliability infrastructure in parts engineering. The NPSL is a listing of electrical, electronic, and electromechanical (EEE) part types and advanced packaging technologies such as Multi-Chip Modules (MCM) which are produced under various government and/or industry quality systems.

Since NASA's Standard EEE Parts List, MIL-STD-975, was cancelled without replacement on May 3, 1998, the NPSL provides a viable alternative for parts selection. However, there are some key differences in the philosophy of these two documents which users must be aware of:

MIL-STD-975 NPSL

Defines "Standard" and "Non-Standard" Parts Leaves standardization up to the individual flight projects Defines a "Non-Standard Parts Approval Request" (NSPAR) policy Leaves it to the individual flight projects to approve parts for the intended application Intended to be invoked as a contract requirement Not intended to be invoked as a contract requirement Very stringent requirements for parts listings Designed to facilitate listing of newer, advanced technologies

OEMs that have an established parts engineering infrastructure may elect to use the NPSL to augment their own existing part selection lists. The NPSL may be chosen, in part or in its entirety, to be a subset of a Project Approved Parts List (PAPL) or equivalent. The decision to invoke the NPSL shall be made by the project based on the parts management and control requirements for that mission. The NPSL itself, should not be imposed as a contractual requirement, but the associated part listings may be established as approved selections by the project.

2.0 ABOUT THIS DOCUMENT

2.1 General:

The NPSL is a selection tool providing designers with a list of EEE parts intended to meet system design requirements and NASA Parts Program quality/reliability levels. It is not mandatory that the parts listed herein be the only selections used to design a system, but if a particular function is needed and a suitable part is listed, the NASA EEE Parts Assurance Group (NEPAG) recommends the listed part as the first order of precedence for selection. Selecting a part from the NPSL may provide cost savings/ avoidance for the project because:

The procurement specification already exists The manufacturer has had a NASA survey or government audit performed The parts are available under one or several NASA accepted quality assurance systems Part qualification has been successfully completed All or most of the parts engineering has already been performed

The parts listed are approved for use only if NASA flight project approval is given. The document lists parts according to established quality assurance levels and NASA Parts Program knowledge of the product and manufacturer such as qualification history, GIDEP and failure trends, and delivery performance. This combination allows NEPAG to make a technical assessment of the quality, availability, capability and reliability and to list parts at a corresponding quality level within this document.

2.2 World Wide Web Access to the NPSL

The NPSL has been developed and will be maintained as an on-line World Wide Web homepage accessible via http://nepp.nasa.gov/npsl. The primary objectives of using the WWW as the platform for maintaining the NPSL are to:

Provide broad and ready access by NASA affiliated organizations world wide Facilitate quick updates, modifications, and revisions Provide links to additional EEE part information

Users will have to access the NPSL on-line and be able to download the document if a printout is desired.

2.3 Configuration Management

Under Construction

2.4 Appendices:

Appendix A (when released) will contain guidelines for derating parts. In general, these guidelines are accepted by NEPAG for use on all projects. Flight projects may elect to further develop these guidelines into requirements. Appendix A may not contain derating criteria for all part types, but guidelines provided can be used as a baseline for project derating requirements.

Appendix B is a repository of useful WWW links to additional parts information databases which can be accessed to support parts selection and application issues.

3.0 USING THIS DOCUMENT

The NPSL has been structured into four primary sections to facilitate finding the information of interest:

Welcome and User Feedback Section (Banner Page) Use Policy Section Parts Listings by Commodity Type Sections Appendices

The Parts Listings by Commodity Type Sections contains the actual part selection listings. The part types which will be covered in the NPSL consist of advanced packaging technologies such as MCMs and the commodities defined as electrical, electronic, and electromechanical (EEE) parts. The commodity types are listed below according to the Federal Stock Classification (FSC) system.

Part Types FSC

Capacitors 5910 Circuit Breakers 5925 Connectors 5935 Crystals and Crystal Oscillators 5955 Fiber Optics 60GP Filters 5915 Fuses 5920 Inductors 5950 Microcircuits (Monolithic and Hybrid) 5962 Relays 5945 Resistors 5905 Semiconductors (Diode and Transistor) 5961 Thermistors 5905 Transformers 5950 Wire and Cable 6145

Within each commodity class the parts are listed in order by procurement specifications in existence as NASA, DoD, or other space agency (e.g. ESA or NASDA) specifications. The part listing for each specification begins with a detailed explanation of the part numbering system. These explanations and the part listings which follow help the user "build" the appropriate part number for the project application. General functional descriptions and generic part number cross-references are provided to assist the user in matching functionality. The part quality levels, radiation tolerance levels (if known), and the available manufacturer sources are also identified.

Although extensive efforts have been made to maintain the accuracy of the supplier information within the part listings, users are encouraged to visit the Defense Supply Center Columbus (DSCC), http://www.dscc.dla.mil/programs/qmlqpl/. DSCC is the Department of Defense agency responsible for certifying suppliers of military specification EEE parts. At this site, users can download the latest Qualified Products List (QPL) for the part type of interest.

4.0 GENERAL REQUIREMENTS

Selection of parts for inclusion in the device listings in this document is based on a review of technical data by the NASA EEE Parts Assurance Group (NEPAG) for quality and reliability trends. The major criteria used to evaluate candidate parts are:

o Quality system and assurance level the products are produced under

o Product performance

o Product workmanship assessments

o Destructive Physical Analysis results

o Failure histories

o Reliability trends

o GIDEP alert histories of the product and manufacturer

o Qualification and screening test results

o Product availability

o Manufacturer audit and survey results

o Manufacturer responsiveness to corrective actions

o Manufacturer delivery histories

Participation by the manufacturers in a quality program such as QPL, QML, and ISO 9000. will not automatically qualify their products for listing in the NPSL. Listings will be based on results from assessments of all the major criteria listed above. EEE parts-related activities throughout NASA provide recommendations for listing parts in this document.

NOTE: Unless specifically stated within the parts selection tables of the NPSL, listing of a device technology herein does NOT imply/guarantee Radiation Hardness Assurance (RHA). Applications concerned with a device's ability to tolerate exposure to various forms of space radiation (e.g., total ionizing dose, single event effects, etc.) should be reviewed and have the device assessed by the Program's radiation assurance experts. The following resources may also be consulted for initial guidance:

NASA Goddard Radiation Effects and Analysis Jet Propulsion Laboratory Radiation Effects

4.1 NASA Parts Levels

The NPSL lists products based on three quality levels defined by NEPAG: Level 1, Level 2, and Level 3. The definitions for each Level and the criteria used to list a part in a particular Level are not part approvals nor is this document a project approved parts list. The NPSL will not provide information on whether or not a part meets individual project flight requirements. Instead, it provides a list of products and associated manufacturers that meet recognized quality assurance baselines, qualification test regimens, and screening requirements necessary for space flight acceptance based on levels of risk. The part selected must be assessed independently by the project or the NASA center or OEM's parts organization to determine if it meets the requirements for the project. The parts engineering organizations at the NASA centers will assist users in making this determination. The Levels herein are not directly related to mission classification, cost, or schedule and users should make the appropriate Level tradeoffs when considering which parts to choose from the list.

4.1.1 Level 1:

Level 1 is the highest product assurance class assigned to parts listed in this document. Level 1 parts are those produced under assurance classes recognized by NASA as providing the highest possible level of quality and reliability (e.g. QML Class V K, JANS for discrete semiconductors, QPL Class S, Failure Rate Level (FRL) S), from NASA approved manufacturing sources, and meeting NASA space level parts and packaging program assessment criteria. The technical assessment results for Level 1 products will show that no known trends exist which have a negative impact on the quality, reliability, or performance for space flight applications. The Level 1 criteria is summarized as follows:

o The supplier's facility(s) must be certified under a recognized quality assurance system (e.g. QML, QPL, ISO 9000) and produce products to the space industry recognized highest assurance classes (e.g. QML V, JANS for discrete semiconductors, QPL Class S, FRL S, GSFC S311 specification) or equivalent. There are exceptions to these levels where this preferred part reliability level is unavailable; these exceptions are shown in the individual part listings.

o A Defense Supply Center Columbus (DSCC) audit or a NASA program manufacturer survey to the highest assurance classes must have been successfully completed within the past 2 years.

o A part procurement specification, containing the highest assurance class requirements, must exist. Parts must have been procured previously by a NASA project using this specification.

o Historical DPA and other parts analysis data on the manufacturer's products must be available and not reveal poor workmanship trends or rejection trends.

o Failure analyses history for the manufacturers products should not reveal problem trends attributed to part quality and reliability.

o No recent unresolved GIDEP Alerts (past 3 years) exist that have a major impact on the Level 1 products quality or reliability. No GIDEP Alert or NASA Parts Advisory trends exist on the manufacturer or product.

o Available data on manufacturer performance must show no trend for late delivery of products to NASA projects.

o Qualification to the requirements of the procurement specification must have been successfully completed. No qualification issues exist and no problem trends from previous qualifications exist.

4.1.2 Level 2:

Level 2 is the second highest product assurance class assigned to parts listed in this document. Level 2 parts are those produced under assurance classes recognized by NASA to have a high level of quality and reliability (e.g. QML Q H, QPL Class B, JANTXV for discrete semiconductors, FRL R or P), from NASA approved manufacturing sources, and meeting NASA space level parts and packaging program assessment criteria. The Level 2 criteria is summarized as follows:

o The supplier's facility(s) must be certified under a recognized quality assurance system (e.g. QML, QPL, ISO 9000) and produce products to space industry recognized high assurance classes (e.g. QML Q, QPL B, JANTXV for discrete semiconductors, FRL R or P, GSFC S311 specification) or equivalent. Any exceptions to these levels where the preferred part reliability level is unavailable, are shown in the individual part listings.

o A Defense Supply Center Columbus (DSCC) audit or a NASA program manufacturer survey must have been successfully completed within the past 2 years.

o A part procurement specification, containing the high assurance class requirements, must exist. Parts must have been procured previously by a NASA project using this specification.

o DPA and other parts analysis data on the manufacturer's products must be available and must not reveal any significant problems due to poor workmanship and must show minimal reject rates.

o Failure analyses history for the manufacturers products should not reveal problem trends attributed to part quality and reliability.

o No unresolved GIDEP Alert trends exist that have a major impact on the Level 2 products quality or reliability. No GIDEP Alert or NASA Parts Advisory trends exist on the manufacturer or product.

o Available data on manufacturer performance must show consistent on-time delivery of products to NASA projects.

o Qualification to the requirements of the procurement specification must have been successfully completed. Qualification issues and problems from previous qualifications must have been resolved (not by waiver).

4.1.3 Level 3:

Level 3 is the minimum product assurance class assigned to parts listed in this document. Level 3 contains many advanced electronic functions (from a space flight applications standpoint) and has been created to provide a technology insertion path into NASA flight projects. Parts listed are those produced by reputable manufacturers under a recognized quality assurance system (QML, QPL, ISO 9000) or their equivalent. Typically, only a limited amount of information is available to NEPAG for these parts and NASA has minimal visibility into the manufacturing and testing of Level 3 product. The parts are usually available commercially and have the capability to be used in space applications. The intent of Level 3 listings is to provide products that are newer, have greater functionality and enhanced performance characteristics, and provide higher levels of integration. Because the product has little or no

heritage in space flight application and data is unavailable or scarce, these parts are considered higher risk than the Level 1 and Level 2 parts. While the price of these parts may be less than the traditional Levels, more engineering evaluation may be needed to qualify the part for the project's application. The overall reliability and cost of ownership should be considered when selecting these parts. The Level 3 criteria is summarized as follows:

The manufacturer has supplied and qualified parts for several NASA space projects within the past 2 years. The parts and manufacturers have been recommended by one of the following NASA programs.

o PSAP o ASAP o ET o AIT

A NASA, DoD, or other space agency procurement specification (e.g. ESA SCC or NASDA QTS) exists. Available data on the manufacturer shows no significant problem trends such as GIDEP Alerts or NASA Parts Advisories, a low DPA rejection rate for the manufacturer's products in general, and no significant failures attributable to product quality and/or reliability.

NEPAG recommends selecting a Level 3 product when a higher Level part does not exist and/or enhanced functionality is required to meet system design requirements. Parts in this Level are not recommended for use in mission critical applications. Selecting these parts may require further engineering evaluation and approval by the project, but some heritage exists. Additionally, having more projects use these parts helps NEPAG acquire the technical data necessary for moving the parts into the higher Levels.

NASA Parts Selection List

Coils and Inductors

The following Coil and Inductor specifications are available for selection:

Military Specification	Description
MIL-PRF-39010	Coil, Fixed, Radio Frequency, Molded, Established Reliability
MIL-PRF-83446	Coil, Fixed or Variable, Radio Frequency

|
Publications
|
Calendar
|
Experts
Admin Login
|
Request Account
|
Feedback
|
Site Map
|
Help
|
Search
NEPP Program Manager:
Chuck Barnes, Jet Propulsion Laboratory
Responsible NASA Official:
Michael Sampson, NEPAG Manager
Website Comments:
Web Development Team
Last Modified:
August 8, 2001
AETD IT Security Banner
NASA Privacy Statement
Go to -
NEPP
|
NPSL
|
Coils
MIL-PRF-39010, COILS
Coils, Fixed, Radio Frequency, Established Reliability
39010 Styles
Part Number/Ordering Explanation
Important! Application Notes
Revision History for MIL-PRF-39010 Listing in the NPSL
Last Updated 08/13/01

Click on the link below to see the associated parts selection listing:

Detail Specification	Description (Click Here for Dimensions)
MIL-PRF-39010/1	Coils, Microminiature, Magnetically Shielded (Phenolic Core, Iron Sleeve) 0.10 uH to 0.82 uH
MIL-PRF-39010/2	Coils, Microminiature, Magnetically Shielded (Iron Core, Iron Sleeve) 1.0 uH to 12.0 uH
MIL-PRF-39010/3	Coils, Microminiature, Magnetically Shielded (Ferrite Core, Ferrite Sleeve) 15 uH to 100,000 uH
MIL-PRF-39010/6	Coils, Microminiature, Magnetically Shielded (Phenolic Core) 0.15 uH to 4.7 uH
MIL-PRF-39010/7	Coils, Microminiature, Magnetically Shielded (Powdered Iron Core) 5.6 uH to 33 uH

APPLICATION NOTES FOR MIL-PRF-39010

1) These parts are suitable for Level 2 applications. However, they may be used in Level 1 applications if they meet the Class S requirements of MIL-STD-981.

2) Parts covered by this specification may contain internal soldered connections that may reflow during installation. Special care must be exercised whe soldering to prevent internal solder reflow.

Revision History for MIL-PRF-39010 Listing in the NPSL

12/29/97	Initial Release of MIL-PRF-39010 Coils Section in the NPSL

Part Number Ordering Information, example and explanation:

M39010/01-AR10JP where,

M39010	/01	-A	R10	J	P
Military Specification Number (Conforming to MIL-PRF-39010)	Slash Sheet	Class Maximum Operating Temperature	Inductance Value	Inductance Tolerance	Failure Rate Level

Click Here for Outline Dimensions

Part number ordering options are developed using the following criteria:

Detail Specification	Description
MIL-PRF-39010/01	Coils, Microminiature, Magnetically Shielded (Phenolic Core, Iron Sleeve)
MIL-PRF-39010/02	Coils, Microminiature, Magnetically Shielded (Iron Core, Iron Sleeve)
MIL-PRF-39010/03	Coils, Microminiature, Magnetically Shielded (Ferrite Core, Ferrite Sleeve)
MIL-PRF-39010/06	Coils, Microminiature, Magnetically Shielded (Phenolic Core)
MIL-PRF-39010/07	Coils, Microminiature, Magnetically Shielded (Powdered Iron Core)

Class Character	Operating Temperature (Maximum)		Tolerance Character	Inductance Tolerance (+/-%)
A	+105deg.C		J	5
B	+125deg.C		K	10
F	+150deg.C		L	20

Failure Rate Designator	Failure Rate Level (%/1000 hrs)
S	0.001
R	0.010
P	0.100

Inductance in microhenries (uH) is expressed by three characters. For less than 10 uH, two digits represent significant figures and the letter "R" represents the decimal point location. For values of 10 uH and over, the first two digits represent significant figures and the third digit represents the number of zeroes to follow.

Examples: R12 = 0.12 uH

3R9 = 3.9 uH

100 = 10 uH

272 = 2700 uH

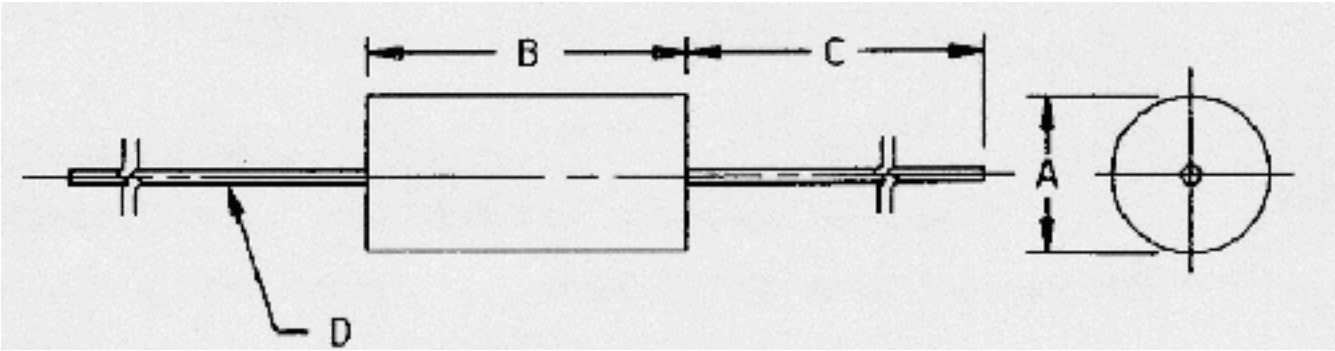

	A		B		C		D	
Style	Min. (in.)	Max. (in.)	Min. (in.)	Max. (in.)	Min. (in.)	Max. (in.)	Min. (in.)	Max. (in.)
M39010/01	0.152	0.172	0.390	0.430	1.250	1.626	0.023	0.027
M39010/02	0.152	0.172	0.390	0.430	1.250	1.626	0.023	0.027
M39010/03	0.152	0.172	0.390	0.430	1.250	1.626	0.023	0.027
M39010/06	0.146	0.166	0.365	0.385	1.250	1.626	0.023	0.027
M39010/07	0.146	0.166	0.365	0.385	1.250	1.626	0.023	0.027

M39010/01 Coils

Click Here for Outline Dimensions

Part Number	Inductance (uH)	Q (Min.)	Inductance Tolerance (%)	Rated DC Current (mA)	Level 2 (#)	Manufacturer
M39010/01-AR10%#	0.10	50	J, K	1790	P or R	API, DAL
M39010/01-AR12%#	0.12	50	J, K	1530	P or R	API, DAL
M39010/01-AR15%#	0.15	50	J, K	1470	P or R	API, DAL
M39010/01-AR18%#	0.18	50	J, K	1300	P or R	API, DAL
M39010/01-AR22%#	0.22	49	J, K	1100	P or R	API, DAL
M39010/01-AR27%#	0.27	47	J, K	853	P or R	API, DAL
M39010/01-AR33%#	0.33	46	J, K	780	P or R	API, DAL
M39010/01-AR39%#	0.39	44	J, K	670	P or R	API, DAL
M39010/01-AR47%#	0.47	44	J, K	565	P or R	API, DAL
M39010/01-AR56%#	0.56	43	J, K	490	P or R	API, DAL
M39010/01-AR68%#	0.68	42	J, K	420	P or R	API, DAL
M39010/01-AR82%#	0.82	40	J, K	370	P or R	API, DAL

M39010/02 Coils

Click Here for Outline Dimensions

Part Number	Inductance (uH)	Q (Min.)	Inductance Tolerance (%)	Rated DC Current (mA)	Level 2 (#)	Manufacturer
M39010/02-A1R0%#	1.0	44	J, K	1070	P or R	API, DAL
M39010/02-A1R2%#	1.2	44	J, K	895	P or R	API, DAL
M39010/02-A1R5%#	1.5	44	J, K	815	P or R	API, DAL
M39010/02-A1R8%#	1.8	44	J, K	755	P or R	API, DAL
M39010/02-A2R2%#	2.2	44	J, K	650	P or R	API, DAL
M39010/02-A2R7%#	2.7	44	J, K	535	P or R	API, DAL
M39010/02-A3R3%#	3.3	44	J, K	480	P or R	API, DAL
M39010/02-A3R9%#	3.9	44	J, K	450	P or R	API, DAL
M39010/02-A4R7%#	4.7	44	J, K	380	P or R	API, DAL
M39010/02-A5R6%#	5.6	44	J, K	335	P or R	API, DAL
M39010/02-A6R8%#	6.8	50	J, K	280	P or R	API, DAL
M39010/02-A8R2%#	8.2	50	J, K	245	P or R	API, DAL
M39010/02-A100%#	10.0	50	J, K	220	P or R	API, DAL
M39010/02-A120%#	12.0	55	J, K	200	P or R	API, DAL

M39010/03 Coils

Click Here for Outline Dimensions

Part Number	Inductance (uH)	Q (Min.)	Inductance Tolerance (%)	Rated DC Current (mA)	Level 2 (#)	Manufacturer
M39010/03-A150%#	15	45	J, K, L	315	P or R	API
M39010/03-A180%#	18	45	J, K, L	300	P or R	API
M39010/03-A220%#	22	45	J, K, L	290	P or R	API

M39010/03-A270%#	27	45	J, K, L	260	P or R	API
M39010/03-A330%#	33	45	J, K, L	240	P or R	API
M39010/03-A390%#	39	50	J, K, L	205	P or R	API
M39010/03-A470%#	47	50	J, K, L	195	P or R	API
M39010/03-A560%#	56	50	J, K, L	190	P or R	API
M39010/03-A680%#	68	50	J, K, L	180	P or R	API
M39010/03-A820%#	82	50	J, K, L	170	P or R	API
M39010/03-A101%#	100	50	J, K, L	160	P or R	API
M39010/03-A121%#	120	55	J, K, L	150	P or R	API
M39010/03-A151%#	150	55	J, K, L	140	P or R	API
M39010/03-A181%#	180	55	J, K, L	135	P or R	API
M39010/03-A221%#	220	55	J, K, L	125	P or R	API
M39010/03-A271%#	270	55	J, K, L	115	P or R	API
M39010/03-A331%#	330	55	J, K, L	110	P or R	API
M39010/03-A391%#	390	60	J, K, L	105	P or R	API
M39010/03-A471%#	470	60	J, K, L	92	P or R	API
M39010/03-A561%#	560	60	J, K, L	90	P or R	API
M39010/03-A681%#	680	60	J, K, L	80	P or R	API
M39010/03-A821%#	820	60	J, K, L	80	P or R	API
M39010/03-A102%#	1,000	60	J, K, L	70	P or R	API
M39010/03-A122%#	1,200	45	J, K, L	60	P or R	API
M39010/03-A152%#	1,500	45	J, K, L	55	P or R	API
M39010/03-A182%#	1,800	45	J, K, L	50	P or R	API
M39010/03-A222%#	2,200	45	J, K, L	50	P or R	API
M39010/03-A272%#	2,700	45	J, K, L	40	P or R	API
M39010/03-A332%#	3,300	45	J, K, L	40	P or R	API
M39010/03-A392%#	3,900	45	J, K, L	35	P or R	API
M39010/03-A472%#	4,700	45	J, K, L	31	P or R	API
M39010/03-A562%#	5,600	44	J, K, L	28	P or R	API
M39010/03-A682%#	6,800	40	J, K, L	27	P or R	API
M39010/03-A822%#	8,200	40	J, K, L	26	P or R	API
M39010/03-A103%#	10,000	40	J, K, L	24	P or R	API
M39010/03-A123%#	12,000	30	J, K, L	23	P or R	API
M39010/03-A153%#	15,000	30	J, K, L	22	P or R	API
M39010/03-A183%#	18,000	30	J, K, L	21	P or R	API
M39010/03-A223%#	22,000	27	J, K, L	17	P or R	API
M39010/03-A273%#	27,000	27	J, K, L	16	P or R	API
M39010/03-A333%#	33,000	27	J, K, L	15	P or R	API
M39010/03-A393%#	39,000	27	J, K, L	15	P or R	API
M39010/03-A473%#	47,000	23	J, K, L	13	P or R	API
M39010/03-A563%#	56,000	23	J, K, L	13	P or R	API
M39010/03-A683%#	68,000	23	J, K, L	12	P or R	API
M39010/03-A823%#	82,000	21	J, K, L	11	P or R	API
M39010/03-A104%#	100,000	18	J, K, L	11	P or R	API

Click Here for Outline Dimensions

Part Number	Inductance (uH)	Q (Min.)	Inductance Tolerance (%)	Rated DC Current (mA)	Level 2 (#)	Manufacturer
M39010/06-BR15%#	0.15	50	J, K, L	2450	P or R	API, DAL
M39010/06-BR22%#	0.22	50	J, K, L	1810	P or R	API, DAL
M39010/06-BR33%#	0.33	45	J, K, L	1400	P or R	API, DAL
M39010/06-BR47%#	0.47	45	J, K, L	1225	P or R	API, DAL
M39010/06-BR56%#	0.56	50	J, K, L	1150	P or R	API, DAL
M39010/06-BR68%#	0.68	50	J, K, L	1100	P or R	API, DAL
M39010/06-BR82%#	0.82	50	J, K, L	900	P or R	API, DAL
M39010/06-B1R0%#	1.0	50	J, K, L	785	P or R	API, DAL
M39010/06-B1R2%#	1.2	33	J, K, L	650	P or R	API, DAL
M39010/06-B1R5%#	1.5	33	J, K, L	600	P or R	API, DAL
M39010/06-B1R8%#	1.8	33	J, K, L	525	P or R	API, DAL
M39010/06-B2R2%#	2.2	33	J, K, L	435	P or R	API, DAL
M39010/06-B2R7%#	2.7	33	J, K, L	385	P or R	API, DAL
M39010/06-B3R3%#	3.3	33	J, K, L	300	P or R	API, DAL
M39010/06-B3R9%#	3.9	33	J, K, L	280	P or R	API, DAL
M39010/06-B4R7%#	4.7	33	J, K, L	260	P or R	API, DAL

M39010/07 Coils

Click Here for Outline Dimensions

Part Number	Inductance (uH)	Q (Min.)	Inductance Tolerance (%)	Rated DC Current (mA)	Level 2 (#)	Manufacturer
M39010/07-A5R6%#	5.6	45	J, K	495	P or R	API, DAL
M39010/07-A6R8%#	6.8	50	J, K	395	P or R	API, DAL
M39010/07-A8R2%#	8.2	50	J, K	360	P or R	API, DAL
M39010/07-A100%#	10.0	55	J, K	290	P or R	API, DAL
M39010/07-A120%#	12.0	65	J, K	265	P or R	API, DAL
M39010/07-A150%#	15.0	65	J, K	240	P or R	API, DAL
M39010/07-A180%#	18.0	75	J, K	185	P or R	API, DAL
M39010/07-A220%#	22.0	75	J, K	175	P or R	API, DAL
M39010/07-A270%#	27.0	60	J, K	170	P or R	API, DAL
M39010/07-A330%#	33.0	65	J, K	165	P or R	API, DAL

Go to -
NEPP
|
NPSL
|
Capacitors
MIL-PRF-83446, COILS

Coils, Chip, Fixed or Variable, Radio Frequency

83446 Styles

Part Number/Ordering Explanation

Important! Application Notes

Revision History for MIL-PRF-83446 Listing in the NPSL

Last Updated 08/13/01

Click on the link below to see the associated parts selection listing:

Detail Specification	Description (Click Here for Dimensions)
MIL-PRF-83446/04	Coils, Chip, Fixed, Radio Frequency 0.01 uH to 27.0 uH
MIL-PRF-83446/05	Coils, Chip, Fixed, Radio Frequency 0.01 uH to 10.0 uH
MIL-PRF-83446/07	Coils, Chip, Variable, Radio Frequency [0.016 uH - 0.019 uH] through [59.8 uH - 76.1 uH]
MIL-PRF-83446/09	Coils, Chip, Variable, Radio Frequency [0.015 uH - 0.021 uH] through [90.0 uH - 150.0 uH]
MIL-PRF-83446/10	Coils, Chip, Fixed, Radio Frequency 0.01 uH to 1,000 uH

APPLICATION NOTES FOR MIL-PRF-83446

1) These parts are suitable for Level 2 applications. However, they may be used in Level 1 applications if they meet the Class S requirements of MIL-STD-981.

2) The epoxy coated coils of MIL-PRF-83446/4 are sensitive to operation at or near the maximum operating temperature of 125deg.C. It is suggested that these coils be restricted in application to a temperature of 105deg.C maximum.

Revision History for MIL-PRF-83446 Listing in the NPSL

08/13/01	Per manufacturer request, I updated Advanced Chip Magnetics manufacturer listing to include the word "COAST" in their name as well as update their address/phone/www page listing. Also, added manufactu
12/29/97	Initial Release of MIL-PRF-83446 Chip Coils Section in the NPSL

Part Number Ordering Information, example and explanation:

M83446/04-01F where,

M83446	/04	-01	F
Military Specification Number (Conforming to MIL-PRF-83446)	Slash Sheet	Dash Number	Termination Finish

Click Here for Outline Dimensions

Part number ordering options are developed using the following criteria:

Detail Specification	Description
MIL-PRF-83446/04	Coils, Chip, Fixed, Radio Frequency
MIL-PRF-83446/05	Coils, Chip, Fixed, Radio Frequency
MIL-PRF-83446/07	Coils, Chip, Variable, Radio Frequency
MIL-PRF-83446/09	Coils, Chip, Variable, Radio Frequency
MIL-PRF-83446/10	Coils, Chip, Fixed, Radio Frequency

Termination Finish Designator	Termination Finish
A	Gold Over Nickel
B	Tin-Lead Over Nickel
C	Tin Plated
D	Platinum-Gold
E	Palladium-Silver
F	Tin-Lead

The two digit dash number specifies the individual inductor characteristics. The individual parts listing sections provide details.

M83446/04

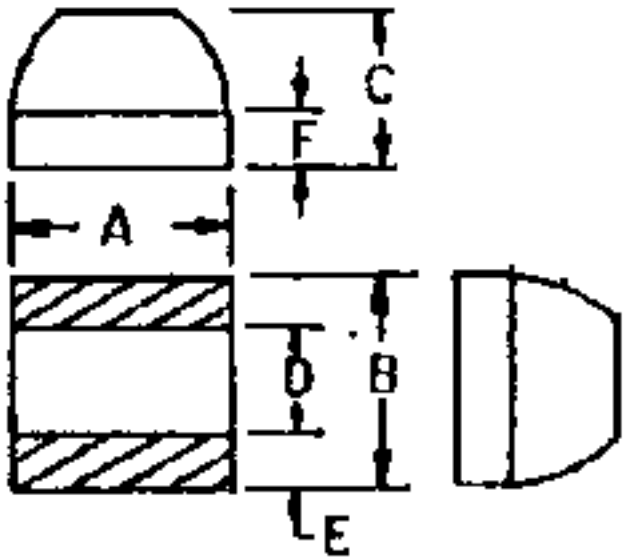

A	B	C	D	E	F
0.100+/-0.010	0.100+/-0.010	0.085 max.	0.030 min.	0.015 min.	0.020 max.

M83446/05

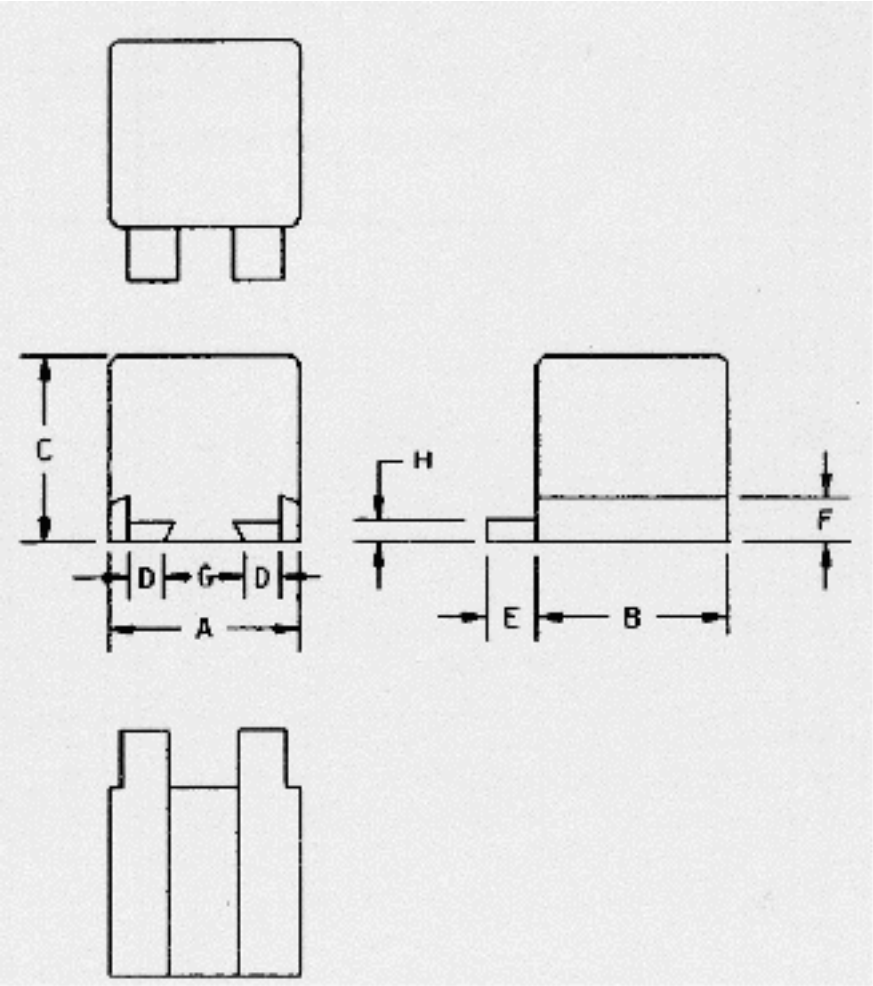

A	B	C	D	E	F	G	H
0.110 max.	0.105 max.	0.085 max.	0.030+/-0.005	0.040+/-0.010	0.018+/-0.005	0.038+/-0.010	0.005+/-0.002

M83446/07

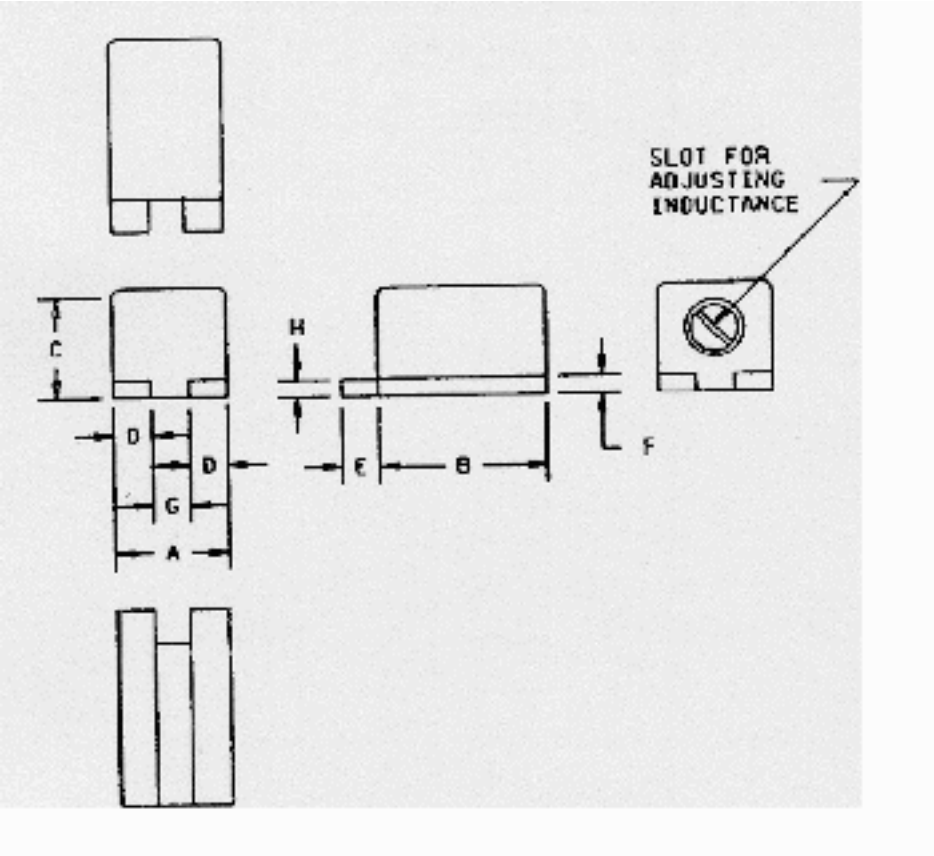

A	B	C	D	E	F	G	H
0.115 max.	0.170 max.	0.115 max.	0.030+/-0.005	0.040 +0.015, -0.010	0.007+/-0.003	0.038+/-0.010	0.005+/-0.002

M83446/09

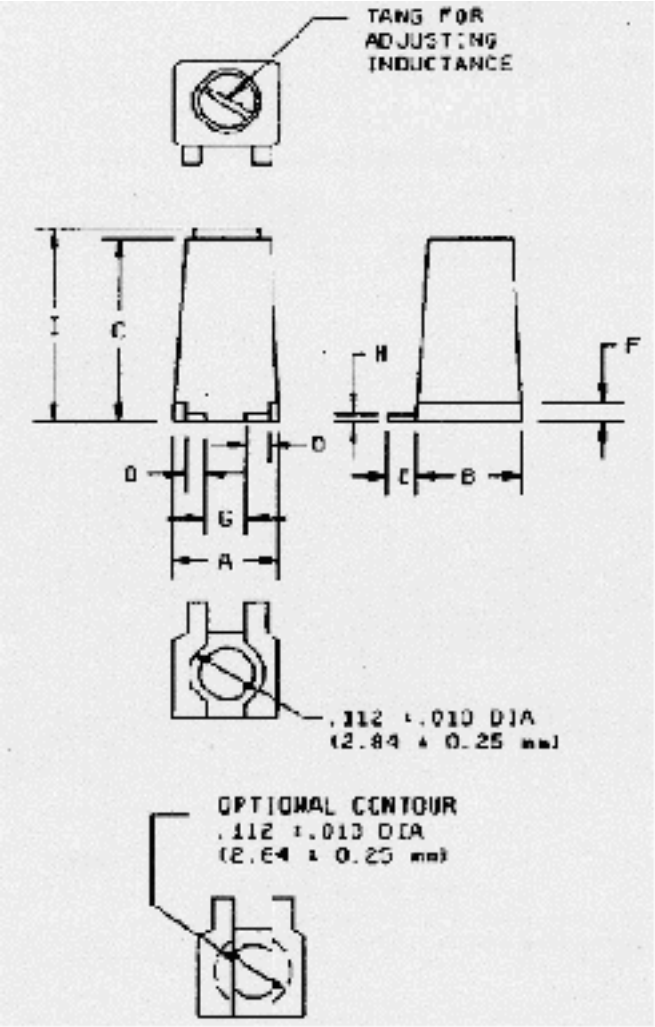

A	B	C	D	E	F	G	H	I
0.165 max.	0.130 max.	0.225 max.	0.030+/-0.010	0.040 +0.015, -0.010	0.020+/-0.005	0.073 min.	0.005+/-0.002	0.250 max.

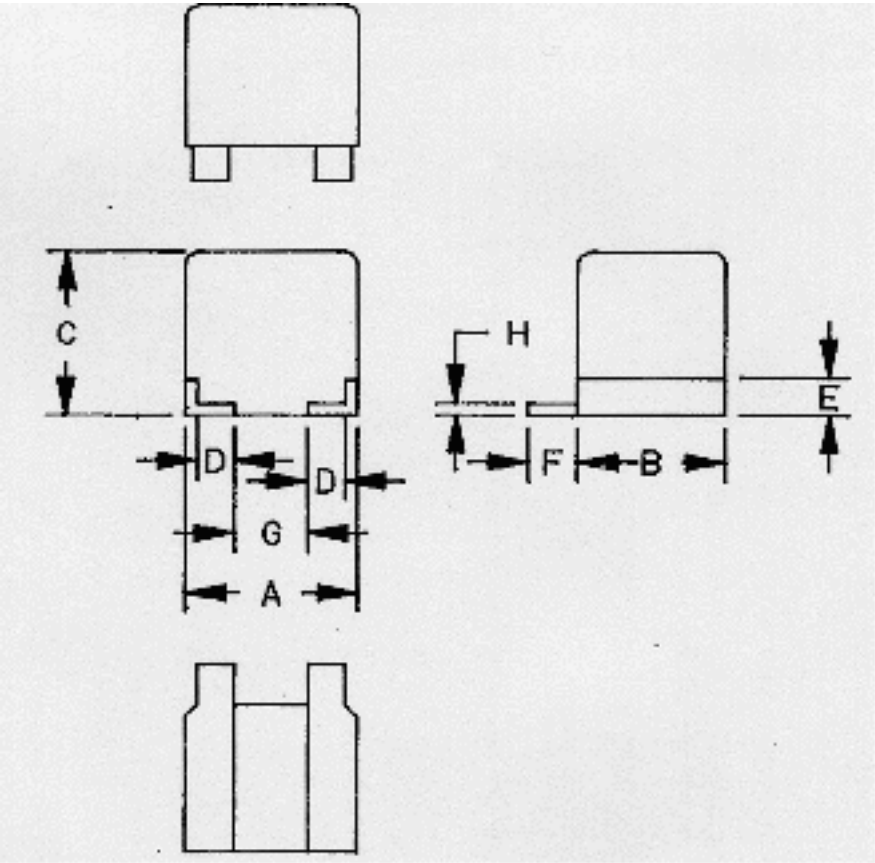

A	B	C	D	E	F	G	H
0.155+/-0.008	0.125+/-0.008	0.130 max.	0.037+/-0.003	0.020+/-0.005	0.040 +0.015, -0.010	0.073 min.	0.005+/-0.002

M83446/04 Fixed, Chip Coils

Click Here for Outline Dimensions

Part Number	Inductance (uH)	Q (Min.)	Inductance Tolerance	Rated DC Current (mA)	Termination (#)	Level	Manufacturer
M83446/04-01#	0.10	30	+/-10%	880	A,B,C,E,F	2	API
M83446/04-02#	0.15	25	+/-10%	745	A,B,C,E,F	2	API
M83446/04-03#	0.18	25	+/-10%	695	A,B,C,E,F	2	API
M83446/04-04#	0.22	25	+/-10%	665	A,B,C,E,F	2	API
M83446/04-05#	0.27	25	+/-10%	650	A,B,C,E,F	2	API
M83446/04-06#	0.33	25	+/-10%	645	A,B,C,E,F	2	API
M83446/04-07#	0.39	22	+/-10%	635	A,B,C,E,F	2	API
M83446/04-08#	0.47	22	+/-10%	610	A,B,C,E,F	2	API
M83446/04-09#	0.56	22	+/-10%	590	A,B,C,E,F	2	API
M83446/04-10#	0.68	22	+/-10%	435	A,B,C,E,F	2	API
M83446/04-11#	0.82	22	+/-10%	430	A,B,C,E,F	2	API
M83446/04-12#	1.00	22	+/-10%	425	A,B,C,E,F	2	API
M83446/04-13#	1.2	22	+/-10%	360	A,B,C,E,F	2	API
M83446/04-14#	1.5	22	+/-10%	340	A,B,C,E,F	2	API
M83446/04-15#	1.8	22	+/-10%	325	A,B,C,E,F	2	API
M83446/04-16#	2.2	22	+/-10%	310	A,B,C,E,F	2	API
M83446/04-17#	2.7	24	+/-10%	290	A,B,C,E,F	2	API
M83446/04-18#	3.3	24	+/-10%	260	A,B,C,E,F	2	API
M83446/04-19#	3.9	24	+/-10%	250	A,B,C,E,F	2	API
M83446/04-20#	4.7	24	+/-10%	230	A,B,C,E,F	2	API
M83446/04-21#	5.6	22	+/-10%	220	A,B,C,E,F	2	API
M83446/04-22#	6.8	22	+/-10%	210	A,B,C,E,F	2	API
M83446/04-23#	8.2	22	+/-10%	195	A,B,C,E,F	2	API
M83446/04-24#	10.0	24	+/-10%	165	A,B,C,E,F	2	API
M83446/04-25#	12.0	25	+/-10%	160	A,B,C,E,F	2	API
M83446/04-26#	15.0	25	+/-10%	135	A,B,C,E,F	2	API
M83446/04-27#	18.0	25	+/-10%	130	A,B,C,E,F	2	API
M83446/04-28#	22.0	25	+/-10%	125	A,B,C,E,F	2	API
M83446/04-29#	27.0	25	+/-10%	120	A,B,C,E,F	2	API
M83446/04-30#	0.010	60	+/-20%	1270	A,B,C,E,F	2	API
M83446/04-31#	0.015	55	+/-20%	1110	A,B,C,E,F	2	API
M83446/04-32#	0.022	50	+/-20%	950	A,B,C,E,F	2	API
M83446/04-33#	0.033	48	+/-20%	900	A,B,C,E,F	2	API
M83446/04-34#	0.047	42	+/-20%	820	A,B,C,E,F	2	API
M83446/04-35#	0.068	36	+/-20%	705	A,B,C,E,F	2	API
M83446/04-36#	0.100	32	+/-20%	650	A,B,C,E,F	2	API

M83446/05 Fixed, Chip Coils

Click Here for Outline Dimensions

Part Number	Inductance (uH)	Q (Min.)	Inductance Tolerance	Rated DC Current (mA)	Termination (#)	Level	Manufacturer
M83446/05-01#	0.010	60	+/-10%	750	A,B,C,D,E,F	2	ACM,MAG,VAN

M83446/05-02#	0.012	60	+/-10%	750	A,B,C,D,E,F	2	ACM,MAG,VAN
M83446/05-03#	0.015	60	+/-10%	750	A,B,C,D,E,F	2	ACM,MAG,VAN
M83446/05-04#	0.018	60	+/-10%	750	A,B,C,D,E,F	2	ACM,MAG,VAN
M83446/05-05#	0.022	51	+/-10%	750	A,B,C,D,E,F	2	ACM,MAG,VAN
M83446/05-06#	0.027	51	+/-10%	750	A,B,C,D,E,F	2	ACM,MAG,VAN
M83446/05-07#	0.033	47	+/-10%	640	A,B,C,D,E,F	2	ACM,MAG,VAN
M83446/05-08#	0.039	47	+/-10%	600	A,B,C,D,E,F	2	ACM,MAG,VAN
M83446/05-09#	0.047	47	+/-10%	550	A,B,C,D,E,F	2	ACM,MAG,VAN
M83446/05-10#	0.056	47	+/-10%	520	A,B,C,D,E,F	2	ACM,MAG,VAN
M83446/05-11#	0.068	47	+/-10%	480	A,B,C,D,E,F	2	ACM,MAG,VAN
M83446/05-12#	0.082	47	+/-10%	470	A,B,C,D,E,F	2	ACM,MAG,VAN
M83446/05-13#	0.10	47	+/-10%	470	A,B,C,D,E,F	2	ACM,MAG,VAN
M83446/05-14#	0.12	47	+/-10%	470	A,B,C,D,E,F	2	ACM,MAG,VAN
M83446/05-15#	0.15	47	+/-10%	450	A,B,C,D,E,F	2	ACM,MAG,VAN
M83446/05-16#	0.18	51	+/-10%	430	A,B,C,D,E,F	2	ACM,MAG,VAN
M83446/05-17#	0.22	51	+/-10%	350	A,B,C,D,E,F	2	ACM,MAG,VAN
M83446/05-18#	0.27	51	+/-10%	310	A,B,C,D,E,F	2	ACM,MAG,VAN
M83446/05-19#	0.33	51	+/-10%	280	A,B,C,D,E,F	2	ACM,MAG,VAN
M83446/05-20#	0.39	47	+/-10%	240	A,B,C,D,E,F	2	ACM,MAG,VAN
M83446/05-21#	0.47	47	+/-10%	230	A,B,C,D,E,F	2	ACM,MAG,VAN
M83446/05-22#	0.56	52	+/-10%	220	A,B,C,D,E,F	2	ACM,MAG,VAN
M83446/05-23#	0.68	52	+/-10%	210	A,B,C,D,E,F	2	ACM,MAG,VAN
M83446/05-24#	0.82	52	+/-10%	200	A,B,C,D,E,F	2	ACM,MAG,VAN
M83446/05-25#	1.00	52	+/-10%	190	A,B,C,D,E,F	2	ACM,MAG,VAN
M83446/05-26#	1.20	42	+/-10%	180	A,B,C,D,E,F	2	ACM,MAG,VAN
M83446/05-27#	1.50	42	+/-10%	160	A,B,C,D,E,F	2	ACM,MAG,VAN
M83446/05-28#	1.80	48	+/-10%	150	A,B,C,D,E,F	2	ACM,MAG,VAN
M83446/05-29#	2.20	48	+/-10%	140	A,B,C,D,E,F	2	ACM,MAG,VAN
M83446/05-30#	2.70	48	+/-10%	130	A,B,C,D,E,F	2	ACM,MAG,VAN
M83446/05-31#	3.30	48	+/-10%	120	A,B,C,D,E,F	2	ACM,MAG,VAN
M83446/05-32#	3.90	48	+/-10%	110	A,B,C,D,E,F	2	ACM,MAG,VAN
M83446/05-33#	4.70	48	+/-10%	100	A,B,C,D,E,F	2	ACM,MAG,VAN
M83446/05-34#	5.60	48	+/-10%	100	A,B,C,D,E,F	2	ACM,MAG,VAN
M83446/05-35#	6.80	46	+/-10%	98	A,B,C,D,E,F	2	ACM,MAG,VAN
M83446/05-36#	8.20	46	+/-10%	95	A,B,C,D,E,F	2	ACM,MAG,VAN
M83446/05-37#	10.0	46	+/-10%	87	A,B,C,D,E,F	2	ACM,MAG,VAN

M83446/07 Variable, Chip Coils

Click Here for Outline Dimensions

Part Number	Inductance (uH)	Q (Min.)	Rated DC Current (mA)	Termination (#)	Level	Manufacturer
M83446/07-01#	0.016-0.019	52	750	A,B,C,D,E,F	2	VAN
M83446/07-02#	0.019-0.024	55	750	A,B,C,D,E,F	2	VAN
M83446/07-03#	0.024-0.030	55	750	A,B,C,D,E,F	2	VAN
M83446/07-04#	0.029-0.037	52	750	A,B,C,D,E,F	2	VAN

M83446/07-05#	0.035-0.043	52	750	A,B,C,D,E,F	2	VAN
M83446/07-06#	0.042-0.052	52	750	A,B,C,D,E,F	2	VAN
M83446/07-07#	0.049-0.062	55	750	A,B,C,D,E,F	2	VAN
M83446/07-08#	0.060-0.076	55	750	A,B,C,D,E,F	2	VAN
M83446/07-09#	0.072-0.092	55	640	A,B,C,D,E,F	2	VAN
M83446/07-10#	0.090-0.110	50	600	A,B,C,D,E,F	2	VAN
M83446/07-11#	0.105-0.135	50	600	A,B,C,D,E,F	2	VAN
M83446/07-12#	0.13-0.17	45	480	A,B,C,D,E,F	2	VAN
M83446/07-13#	0.16-0.20	454	450	A,B,C,D,E,F	2	VAN
M83446/07-14#	0.19-0.25	45	400	A,B,C,D,E,F	2	VAN
M83446/07-15#	0.24-0.31	45	350	A,B,C,D,E,F	2	VAN
M83446/07-16#	0.29-0.37	45	300	A,B,C,D,E,F	2	VAN
M83446/07-17#	0.35-0.44	42	260	A,B,C,D,E,F	2	VAN
M83446/07-18#	0.42-0.52	40	250	A,B,C,D,E,F	2	VAN
M83446/07-19#	0.50-0.62	40	230	A,B,C,D,E,F	2	VAN
M83446/07-20#	0.60-0.76	40	180	A,B,C,D,E,F	2	VAN
M83446/07-21#	0.73-0.92	40	160	A,B,C,D,E,F	2	VAN
M83446/07-22#	0.88-1.12	40	120	A,B,C,D,E,F	2	VAN
M83446/07-23#	1.05-1.35	40	115	A,B,C,D,E,F	2	VAN
M83446/07-24#	1.3-1.7	22	90	A,B,C,D,E,F	2	VAN
M83446/07-25#	1.5-2.0	22	85	A,B,C,D,E,F	2	VAN
M83446/07-26#	1.9-2.5	19	62	A,B,C,D,E,F	2	VAN
M83446/07-27#	2.4-3.0	19	60	A,B,C,D,E,F	2	VAN
M83446/07-28#	2.9-3.7	19	55	A,B,C,D,E,F	2	VAN
M83446/07-29#	3.5-4.3	19	50	A,B,C,D,E,F	2	VAN
M83446/07-30#	4.2-5.2	19	100	A,B,C,D,E,F	2	VAN
M83446/07-31#	5.0-6.2	22	100	A,B,C,D,E,F	2	VAN
M83446/07-32#	6.0-7.5	22	85	A,B,C,D,E,F	2	VAN
M83446/07-33#	7.3-9.1	21	75	A,B,C,D,E,F	2	VAN
M83446/07-34#	8.8-11.2	21	70	A,B,C,D,E,F	2	VAN
M83446/07-35#	10.6-13.4	21	65	A,B,C,D,E,F	2	VAN
M83446/07-36#	13.2-16.8	22	60	A,B,C,D,E,F	2	VAN
M83446/07-37#	15.8-20.1	22	47	A,B,C,D,E,F	2	VAN
M83446/07-38#	19.4-24.6	22	45	A,B,C,D,E,F	2	VAN
M83446/07-39#	23.7-30.2	22	43	A,B,C,D,E,F	2	VAN
M83446/07-40#	29.1-36.9	22	42	A,B,C,D,E,F	2	VAN
M83446/07-41#	34.3-43.6	22	37	A,B,C,D,E,F	2	VAN
M83446/07-42#	41.3-52.6	22	35	A,B,C,D,E,F	2	VAN
M83446/07-43#	49.2-62.7	22	34	A,B,C,D,E,F	2	VAN
M83446/07-44#	59.8-76.1	22	32	A,B,C,D,E,F	2	VAN

M83446/09 Variable, Chip Coils

Click Here for Outline Dimensions

Part Number	Inductance (uH)	Q (Min.)	Rated DC Current (mA)	Termination (#)	Level	Manufacturer

M83446/09-01#	0.015-0.021	50	750	A,B,C,D,E,F	2	VAN
M83446/09-02#	0.018-0.026	55	750	A,B,C,D,E,F	2	VAN
M83446/09-03#	0.022-0.032	55	750	A,B,C,D,E,F	2	VAN
M83446/09-04#	0.027-0.039	55	750	A,B,C,D,E,F	2	VAN
M83446/09-05#	0.033-0.047	55	750	A,B,C,D,E,F	2	VAN
M83446/09-06#	0.039-0.056	55	750	A,B,C,D,E,F	2	VAN
M83446/09-07#	0.047-0.068	55	700	A,B,C,D,E,F	2	VAN
M83446/09-08#	0.055-0.083	55	700	A,B,C,D,E,F	2	VAN
M83446/09-09#	0.067-0.099	55	645	A,B,C,D,E,F	2	VAN
M83446/09-10#	0.080-0.120	55	645	A,B,C,D,E,F	2	VAN
M83446/09-11#	0.096-0.144	50	600	A,B,C,D,E,F	2	VAN
M83446/09-12#	0.120-0.180	50	560	A,B,C,D,E,F	2	VAN
M83446/09-13#	0.140-0.220	50	525	A,B,C,D,E,F	2	VAN
M83446/09-14#	0.170-0.270	50	500	A,B,C,D,E,F	2	VAN
M83446/09-15#	0.210-0.330	50	400	A,B,C,D,E,F	2	VAN
M83446/09-16#	0.260-0.400	50	360	A,B,C,D,E,F	2	VAN
M83446/09-17#	0.320-0.470	40	300	A,B,C,D,E,F	2	VAN
M83446/09-18#	0.370-0.570	40	280	A,B,C,D,E,F	2	VAN
M83446/09-19#	0.460-0.680	40	250	A,B,C,D,E,F	2	VAN
M83446/09-20#	0.540-8.20	40	200	A,B,C,D,E,F	2	VAN
M83446/09-21#	0.680-1.000	40	180	A,B,C,D,E,F	2	VAN
M83446/09-22#	0.750-1.250	40	160	A,B,C,D,E,F	2	VAN
M83446/09-23#	0.900-1.500	40	150	A,B,C,D,E,F	2	VAN
M83446/09-24#	1.13-1.87	35	135	A,B,C,D,E,F	2	VAN
M83446/09-25#	1.35-2.25	35	120	A,B,C,D,E,F	2	VAN
M83446/09-26#	1.65-2.75	35	100	A,B,C,D,E,F	2	VAN
M83446/09-27#	2.02-3.37	25	90	A,B,C,D,E,F	2	VAN
M83446/09-28#	2.48-4.12	25	80	A,B,C,D,E,F	2	VAN
M83446/09-29#	2.92-4.87	25	80	A,B,C,D,E,F	2	VAN
M83446/09-30#	3.52-5.88	25	80	A,B,C,D,E,F	2	VAN
M83446/09-31#	4.20-7.00	22	75	A,B,C,D,E,F	2	VAN
M83446/09-32#	5.10-8.50	22	75	A,B,C,D,E,F	2	VAN
M83446/09-33#	6.10-10.2	22	72	A,B,C,D,E,F	2	VAN
M83446/09-34#	7.50-12.5	22	72	A,B,C,D,E,F	2	VAN
M83446/09-35#	9.00-15.0	22	70	A,B,C,D,E,F	2	VAN
M83446/09-36#	11.2-18.7	22	65	A,B,C,D,E,F	2	VAN
M83446/09-37#	13.5-22.5	22	55	A,B,C,D,E,F	2	VAN
M83446/09-38#	16.5-27.5	22	50	A,B,C,D,E,F	2	VAN
M83446/09-39#	20.2-31.3	22	45	A,B,C,D,E,F	2	VAN
M83446/09-40#	24.7-41.2	22	43	A,B,C,D,E,F	2	VAN
M83446/09-41#	29.2-48.8	22	42	A,B,C,D,E,F	2	VAN
M83446/09-42#	35.2-58.8	22	40	A,B,C,D,E,F	2	VAN
M83446/09-43#	42.0-70.0	22	36	A,B,C,D,E,F	2	VAN
M83446/09-44#	51.0-85.0	22	32	A,B,C,D,E,F	2	VAN
M83446/09-45#	62.0-102.0	25	28	A,B,C,D,E,F	2	VAN
M83446/09-46#	75.0-125.0	25	25	A,B,C,D,E,F	2	VAN
M83446/09-47#	90.0-150.0	25	22	A,B,C,D,E,F	2	VAN

M83446/10 Fixed, Chip Coils

Click Here for Outline Dimensions

Part Number	Inductance (uH)	Q (Min.)	Inductance Tolerance	Rated DC Current (mA)	Termination (#)	Level	Manufacturer
M83446/10-01#	0.010	60	+/-10%	1000	A,B,C,D,E,F	2	ACM,MAG,VAN
M83446/10-02#	0.012	70	+/-10%	1000	A,B,C,D,E,F	2	ACM,MAG,VAN
M83446/10-03#	0.015	75	+/-10%	1000	A,B,C,D,E,F	2	ACM,MAG,VAN
M83446/10-04#	0.018	75	+/-10%	1000	A,B,C,D,E,F	2	ACM,MAG,VAN
M83446/10-05#	0.022	60	+/-10%	1000	A,B,C,D,E,F	2	ACM,MAG,VAN
M83446/10-06#	0.027	60	+/-10%	1000	A,B,C,D,E,F	2	ACM,MAG,VAN
M83446/10-07#	0.033	60	+/-10%	1000	A,B,C,D,E,F	2	ACM,MAG,VAN
M83446/10-08#	0.039	60	+/-10%	900	A,B,C,D,E,F	2	ACM,MAG,VAN
M83446/10-09#	0.047	65	+/-10%	900	A,B,C,D,E,F	2	ACM,MAG,VAN
M83446/10-10#	0.056	65	+/-10%	900	A,B,C,D,E,F	2	ACM,MAG,VAN
M83446/10-11#	0.068	65	+/-10%	840	A,B,C,D,E,F	2	ACM,MAG,VAN
M83446/10-12#	0.082	65	+/-10%	840	A,B,C,D,E,F	2	ACM,MAG,VAN
M83446/10-13#	0.10	65	+/-10%	840	A,B,C,D,E,F	2	ACM,MAG,VAN
M83446/10-14#	0.12	65	+/-10%	840	A,B,C,D,E,F	2	ACM,MAG,VAN
M83446/10-15#	0.15	75	+/-10%	790	A,B,C,D,E,F	2	ACM,MAG,VAN
M83446/10-16#	0.18	75	+/-10%	790	A,B,C,D,E,F	2	ACM,MAG,VAN
M83446/10-17#	0.22	70	+/-10%	790	A,B,C,D,E,F	2	ACM,MAG,VAN
M83446/10-18#	0.27	70	+/-10%	700	A,B,C,D,E,F	2	ACM,MAG,VAN
M83446/10-19#	0.33	70	+/-10%	700	A,B,C,D,E,F	2	ACM,MAG,VAN
M83446/10-20#	0.39	70	+/-10%	700	A,B,C,D,E,F	2	ACM,MAG,VAN
M83446/10-21#	0.47	70	+/-10%	590	A,B,C,D,E,F	2	ACM,MAG,VAN
M83446/10-22#	0.56	70	+/-10%	510	A,B,C,D,E,F	2	ACM,MAG,VAN
M83446/10-23#	0.68	70	+/-10%	430	A,B,C,D,E,F	2	ACM,MAG,VAN
M83446/10-24#	0.82	75	+/-10%	400	A,B,C,D,E,F	2	ACM,MAG,VAN
M83446/10-25#	1.00	75	+/-10%	380	A,B,C,D,E,F	2	ACM,MAG,VAN
M83446/10-26#	1.20	65	+/-10%	330	A,B,C,D,E,F	2	ACM,MAG,VAN
M83446/10-27#	1.50	65	+/-10%	290	A,B,C,D,E,F	2	ACM,MAG,VAN
M83446/10-28#	1.80	65	+/-10%	260	A,B,C,D,E,F	2	ACM,MAG,VAN
M83446/10-29#	2.20	65	+/-10%	230	A,B,C,D,E,F	2	ACM,MAG,VAN
M83446/10-30#	2.70	65	+/-10%	210	A,B,C,D,E,F	2	ACM,MAG,VAN
M83446/10-31#	3.30	60	+/-10%	200	A,B,C,D,E,F	2	ACM,MAG,VAN
M83446/10-32#	3.90	60	+/-10%	180	A,B,C,D,E,F	2	ACM,MAG,VAN
M83446/10-33#	4.70	60	+/-10%	170	A,B,C,D,E,F	2	ACM,MAG,VAN
M83446/10-34#	5.60	65	+/-10%	160	A,B,C,D,E,F	2	ACM,MAG,VAN
M83446/10-35#	6.80	65	+/-10%	140	A,B,C,D,E,F	2	ACM,MAG,VAN
M83446/10-36#	8.20	65	+/-10%	130	A,B,C,D,E,F	2	ACM,MAG,VAN
M83446/10-37#	10.0	65	+/-10%	120	A,B,C,D,E,F	2	ACM,MAG,VAN
M83446/10-38#	12.0	60	+/-10%	118	A,B,C,D,E,F	2	ACM,MAG,VAN
M83446/10-39#	15.0	60	+/-10%	115	A,B,C,D,E,F	2	ACM,MAG,VAN
M83446/10-40#	18.0	60	+/-10%	114	A,B,C,D,E,F	2	ACM,MAG,VAN

M83446/10-41#	22.0	60	+/-10%	113	A,B,C,D,E,F	2	ACM,MAG,VAN
M83446/10-42#	27.0	65	+/-10%	110	A,B,C,D,E,F	2	ACM,MAG,VAN
M83446/10-43#	33.0	65	+/-10%	100	A,B,C,D,E,F	2	ACM,MAG,VAN
M83446/10-44#	39.0	65	+/-10%	84	A,B,C,D,E,F	2	ACM,MAG,VAN
M83446/10-45#	47.0	70	+/-10%	79	A,B,C,D,E,F	2	ACM,MAG,VAN
M83446/10-46#	56.0	70	+/-10%	70	A,B,C,D,E,F	2	ACM,MAG,VAN
M83446/10-47#	68.0	65	+/-10%	67	A,B,C,D,E,F	2	ACM,MAG,VAN
M83446/10-48#	82.0	60	+/-10%	64	A,B,C,D,E,F	2	ACM,MAG,VAN
M83446/10-49#	100.0	60	+/-10%	62	A,B,C,D,E,F	2	ACM,MAG,VAN
M83446/10-50#	120.0	40	+/-10%	59	A,B,C,D,E,F	2	ACM,MAG,VAN
M83446/10-51#	150.0	40	+/-10%	56	A,B,C,D,E,F	2	ACM,MAG,VAN
M83446/10-52#	180.0	40	+/-10%	52	A,B,C,D,E,F	2	ACM,MAG,VAN
M83446/10-53#	220.0	40	+/-10%	45	A,B,C,D,E,F	2	ACM,MAG,VAN
M83446/10-54#	270.0	40	+/-10%	44	A,B,C,D,E,F	2	ACM,MAG,VAN
M83446/10-55#	330.0	40	+/-10%	41	A,B,C,D,E,F	2	ACM,MAG,VAN
M83446/10-56#	390.0	40	+/-10%	39	A,B,C,D,E,F	2	ACM,MAG,VAN
M83446/10-57#	470.0	35	+/-10%	37	A,B,C,D,E,F	2	ACM,MAG,VAN
M83446/10-58#	560.0	35	+/-10%	33	A,B,C,D,E,F	2	ACM,MAG,VAN
M83446/10-59#	680.0	35	+/-10%	30	A,B,C,D,E,F	2	ACM,MAG,VAN
M83446/10-60#	820.0	30	+/-10%	26	A,B,C,D,E,F	2	ACM,MAG,VAN
M83446/10-61#	1000.0	30	+/-10%	25	A,B,C,D,E,F	2	ACM,MAG,VAN

Coil and Inductor Manufacturer Listing and Links to Manufactures Homepages

Click

here

for detailed information regarding part technologies offered by manufacturers listed in the

PSAP

Core Suppliers List

Listed below are links to manufacturer data sites that may provide additional part related information. The linked sites are not under the control of NPSL and NASA is not responsible for information contained in the linked site. We are providing these links for your convenience only.

ACM

Coast/Advanced Chip Magnetics

5301 W. Washington Boulevard

Los Angeles, CA 90016

CAGE Code: 22558

Tel: 323-936-8028

API

American Precision Industries, Inc. (Delevan Division)

270 Quaker Road

East Aurora, NY 14052

CAGE Code: 99800

Tel:

DAL

Dale Electronics, Inc.
East Highway 50
Yankton, SD 57078
CAGE Code: 09969
Tel:
MAG
Magnespec, Inc.
3037 E. Harcourt Street
Rancho Dominguez, CA 90221
CAGE Code: 53854
Tel:
PIC
Piconics, Inc.
20 Cummings Road
Tyngsboro, MA 01879
CAGE Code: 26618
Tel:
VAN
Vanguard Electronics Company, Inc.
1480 West 178th Street
Gardena, CA 90248
CAGE Code: 03550
Tel:

Active Parts Core Suppliers List (CSL)

The Active Parts Core Suppliers Listing (CSL) is a listing of manufacturers who are considered preferred suppliers of monolithic microcircuits, hybrid microcircuits, transistors or diodes by NASA. The CSL consists of two parts:

Core Suppliers List Part I

Introduction Section I - Microcircuits Section II - Hybrids Section III - Diodes Section IV - Transistors

Core Suppliers List Part II

Japanese Space Agency (NASDA) Listings European Space Agency (ESA) Listings

NOTE: A Portable Document Format (PDF) reader will be needed to view the CSL files on this page. A PDF reader, along with installation instructions, can be obtained free from Adobe Systems Incorporated.

Part I follows, and includes only those suppliers who satisfy the following criteria:

Are listed in QML-38535 (Qualified Manufacturers List of Advanced Microcircuits Qualified Under Military Specification MIL-PRF-38535?), QML-38534 (?Qualified Manufacturers List of Custom Hybrid Microcircuits Qualified under Military Specification List of Custom Hybrid Microcircuits Qualified under Military Specification MIL-H-38534?) or QPL-19500 (?Qualified Products List of Products Qualified under Military Specification MIL-S-19500) Offer one or more products which are currently listed in either MIL-STD-975 or the GSFC PPL Offer QML/QPL products to quality assurance levels which are considered suitable for spaceflight use Have established a history of providing high reliability parts to NASA.

The CSL, Part II, includes active part suppliers, who are not necessarily QML/QPL-certified, but who satisfy the following criteria:

Manufacturers parts on DESC certified and qualified lines Have compiled a satisfactory history of supplying high reliability parts which are currently procured through contractor (or OEM) SCDs Manufacture parts to NASA specifications Are certified and qualified by ESA/NASDA to provide parts to ESA/SCC or NASDA specifications)

The CSL is intended to assist NASA project management, parts/reliability engineers and designers in avoiding EEE part reliability/mission schedule problems which can result when parts are procured from unproven suppliers or suppliers who show recent trends indicative of unsatisfactory performance.

For each manufacturer listed in the CSL, Part I, herein, there is accompanying information related to the processing technologies and product lines for which the manufacturer is considered a core supplier and the name/phone number of a company representative to whom questions may be directed.

The information described in this report was obtained from NASA GSFC Preferred Parts List (PPL-21), NASA Standard Electrical, Electronic and Electromechanical parts list (MIL-STD-975), Qualified Manufacturers List for Monolithic Microcircuits (QML-38535), Qualified Manufacturers list for Custom Hybrid Microcircuits (QML- 38534), and Qualified Products List for Diodes and Transistors (QPL-19500).

For convenience, the listings have been grouped by part commodity. Introductory remarks for each section provide an explanation of the information contained therein. Please note that the manufacturer's listing and the accompanying information are considered accurate at the time of issue of this document. However, the semiconductor industry is one known for rapid change of technology and development including fabrication processes and assembly locations. As a result, the listings are subject to change without notice; revisions or amendments will be issued, as necessary.

For additional information regarding this Core Suppliers Listing, please contact:

Ashok Sharma NASA Goddard Space Flight Center Greenbelt, Maryland 20771 Attn: Ashok Sharma (Active Parts Specialist Code 562) (301) 286-6165 (301) 286-1695 (fax)

Appendix A Derating Criteria

Under Construction.

Appendix B Additional Parts Information Links

Listed below are some useful Links to other data sites that can be used in obtaining additional part related information:

NASA Parts and Packaging Program (NPPP)

Site managed by the Jet Propulsion Laboratory (JPL) -- This Site Contains Electronic Parts Reliability Information Studies of Emerging Microelectronics Technologies Radiation Effects Information JPL's Electronic Parts Information Network System (EPINS)

Electronic Parts Information Management System (EPIMS) User ID/Password Controlled -- This Site Contains GIDEP Alerts GSFC Parts Analysis Web System (PAWS) NASA Parts Advisories NASA Project Parts Lists Nonstandard Part Approval Requests Manufacturer CAGE code/address look up

GSFC SEU Radiation Data Bank

JPL's Radiation Data Bank

GSFC Procurement Specifications

Appendix C Prohibited Materials Section

The following section of the NASA Parts Selection List (NPSL) has been developed to identify materials often used in the manufacture and assembly of EEE parts that shall be prohibited from use in high reliability NASA electronic systems and flight hardware. Users are strongly urged to familiarize themselves with these issues to minimize the risk of introducing potential problems. In addition to the issues noted in this section, each commodity section within the NPSL has application notes that are unique to the commodity. Therefore, users should also review the application notes contained in each commodity section.

1. Pure Tin Plating 2. Cadmium Plating 3. Zinc Plating

Pure Tin Plating Prohibition

Policy:

Pure tin plating is prohibited as a final finish on EEE parts and associated hardware

Reference:

NASA Advisory NA-044 October 23, 1998 NASA Advisory NA-044A December 17, 1998 NASA GSFC Tin Whisker Homepage

Rationale:

Pure tin finishes are susceptible to the spontaneous growth of electrically conductive single crystal structures known as tin whiskers. Over time these whiskers may grow to be several millimeters (mm) long. Tin whiskers are capable of causing electrical failures ranging from parametric deviations to sustained plasma arcing (in vacuum) that can result in catastrophic short circuits.

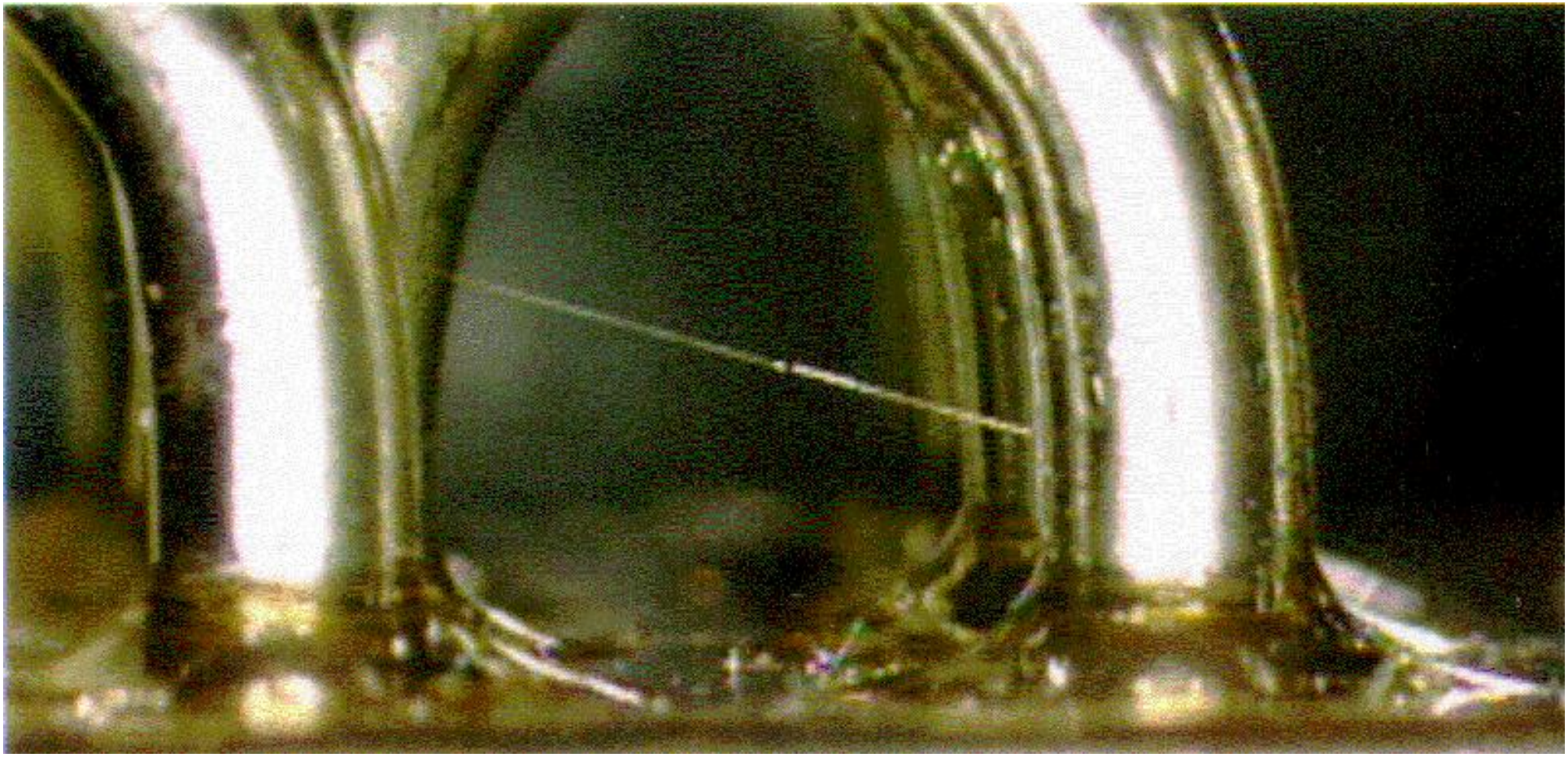

An Example of a Tin Whisker

Several instances have been reported where tin whiskers have caused system failures in both earth and space-based applications including at least 3 reports where a tin whisker induced short circuit resulted in complete failure of the commercial satellite.

The general risks fall into four categories:

Stable short circuits in low voltage, high impedance circuits.In such circuits there may be insufficient current available to fuse the whisker open and a stable short circuit results. Depending on the diameter and length of the whisker, it can take more than 50 milliamps (mA) to fuse one open. More typical is ~10mA Transient short circuits. At atmospheric pressure, if the available current exceeds the fusing current of the whisker, the circuit may only experience a transient glitch as the whisker fuses open. Plasma arcing in vacuum.In vacuum a much more destructive phenomenon can occur. If currents of above a few amps are available, the whisker will fuse open but the vaporized tin may initiate a plasma that can conduct over 200 amps. An adequate supply of tin from the plated surface is necessary to sustain the arc. This phenomenon is reported to have occurred on several commercial satellites resulting in blown fuses that rendered the spacecraft non-operational. Debris/Contamination.Whiskers or parts of whiskers may break loose and bridge isolated conductors or interfere with optical surfaces

Recommendations:

At this time, the only sure way of avoiding tin whiskers is not to use parts plated with pure tin. Despite procurement specification requirements that prohibit pure tin, errors sometimes occur resulting in pure tin plated components being delivered. Therefore, users are advised to independently test and analyze the plating composition of the products received as a verification that pure tin plating is not in use. Simple visual inspection is generally not sufficient because pure tin plating may appear similar to other plated finishes such as tin/lead or nickel.

Utilization of procurement specifications that have clear restrictions against the use of pure tin plating is still recommended. Most, but not all, of the commonly used military specifications currently have prohibitions against pure tin plating. Studies have shown that alloying tin with a second metal reduces the propensity for whisker growth. Alloys of tin and lead are acceptable where the alloy contains a minimum of 3% lead by weight.

In the event pure tin plated parts cannot be avoided, there are some additional processing techniques that may be used to reduce but not eliminate the risks associated with tin whiskers. The effectiveness of these approaches is variable and most require further evaluation to determine their suitability for long duration missions. Examples of these approaches include:

Solder dipping pure tin plated terminations and leads using a leaded solder. The effectiveness of this approach at covering all pure tin plated surfaces can be variable. Application of conformal coat material to pure tin plated surfaces. Conformal coat appears to reduce the growth rate of tin whiskers, but whiskers are still capable of growing through some conformal coat materials such as polyurethanes. For some device types manufacturers may be willing to replate surfaces using finishes such as tin/lead or nickel which are substantially less prone to whisker formation.

Cadmium Plating Prohibition

Policy:

Cadmium plating is prohibited on EEE parts and associated hardware. In some applications use of Cadmium plating may be acceptable via a Project approved waiver process that includes review and approval by both Materials and Parts Engineering disciplines.

Reference:

MSFC-HDBK-527, Materials Selection List for Space Hardware Systems JSC 11123, Space Transportation System Payload Safety Guidelines Handbook

Rationale:

There are several reasons for prohibiting the use of Cadmium plating in space flight electronic systems.

Cadmium is known to sublimate in a hard vacuum environment (especially at temperatures above 75°C). The sublimation products, which are conductive, can redeposit resulting in short circuits. The sublimation products may also interfere with sensitive optics. Cadmium is a toxic material that should not be used in manned spaceflight applications Cadmium is subject to the spontaneous growth of Cadmium whiskers. The propensity of Cadmium to grow whiskers

appears to be lower than that of zinc and especially tin. Cadmium whiskers (like tin whiskers) grow spontaneously and are capable of causing electrical failures ranging from parametric deviations to sustained plasma arcing that can result in catastrophic short circuits. See prohibition against pure tin plating for additional insight regarding the risks of metal whiskers.

Recommendations:

Cadmium plating is commonly used on connectors, connector hardware and mechanical hardware such as fasteners. It provides excellent resistance to salt corrosion and is therefore offered in many military specifications predominantly for use in naval applications. However, most NASA applications are not concerned with salt corrosion and the risks associated with use of Cadmium plating noted above outweigh the benefits of its use in spaceflight applications. There are several alternatives to Cadmium plating that are suited for spaceflight use. For connectors, electroless nickel plating is preferred. Gold plating is preferred when the application requires additional shielding effectiveness or low residual magnetism. Passivated stainless steel is the preferred material for hardware items such as fasteners. Consult your materials or parts specialists for suggested alternatives to Cadmium plating.

Zinc Plating Prohibition

Policy:

Zinc plating is prohibited on EEE parts and associated hardware. In some applications use of Zinc plating may be acceptable via a Project approved waiver process that includes review and approval by both Materials and Parts Engineering disciplines.

Reference: NA

Rationale:

There are several reasons for prohibiting the use of Zinc plating in space flight electronic systems.

Zinc is known to sublimate in a vacuum environment (especially at elevated temperatures). The sublimation products are conductive and can result in short circuits. Zinc is subject to the spontaneous growth of Zinc whiskers. Zinc whiskers (like tin whiskers) grow spontaneously and are capable of causing electrical failures ranging from parametric deviations to sustained plasma arcing that can result in catastrophic short circuits. See prohibition against pure tin plating for additional insight regarding the risks of metal whiskers

Recommendations:

Zinc (galvanized) plating is occasionally used on mechanical hardware such as fasteners for its corrosion resistant properties. By using alternative plating materials most NASA applications can avoid the risks associated with the use of Zinc plating while still achieving suitable corrosion resistance. Consult your materials or parts specialists for suggested alternatives to Zinc plating.