Radiation Testing of Aurora Protocol with FPGA MGTs

Kevin Ellsworth
Travis Haroldsen
Michael Wirthlin
Brent Nelson
Brigham Young University

CHREC
NSF Center for High-Performance Reconfigurable Computing

BYU
BRIGHAM YOUNG UNIVERSITY

Overview

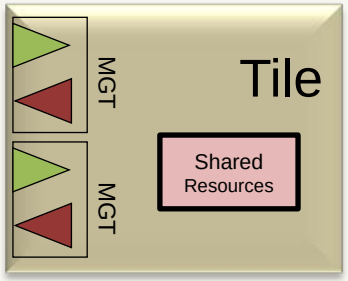

- Introduction
- FPGA Multi-Gigabit Transceiver (MGT) Overview
- Radiation Test Motivation
- Aurora Protocol Overview
- Test Setup
- Test Results
- Conclusions

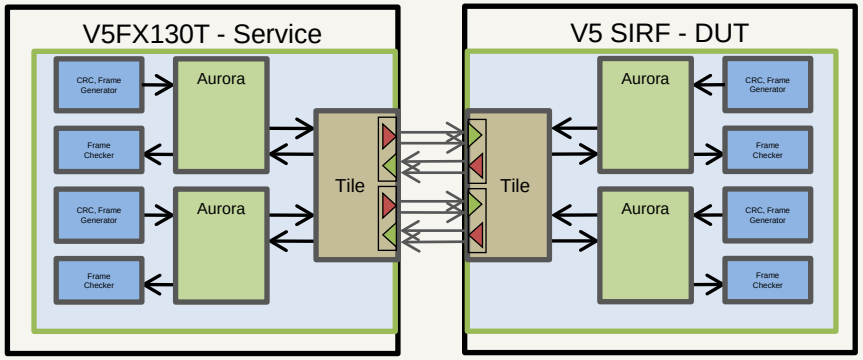

Introduction

- FPGA Multi-Gigabit Transceivers (MGTs) are used to transmit data serially to/from FPGAs
- MGTs are susceptible to SEUs resulting in
  - Data loss
  - Reduced bandwidth
- **GOAL**: Determine if the addition of a protocol can help mitigate known MGT SEU issues

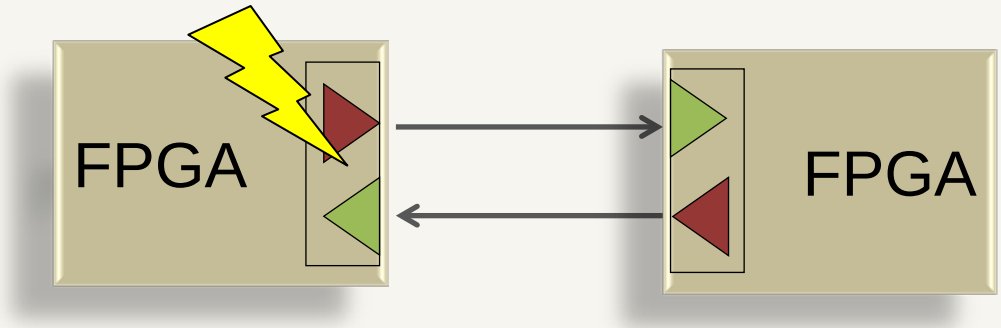

SEUs in the Configuration Memory

- SRAM-based FPGAs are sensitive to radiation
  - Logic and routing sensitive to SEUs – not just memories
  - Soft fault that acts like a hard fault (until reconfigured) → ***firm*** fault

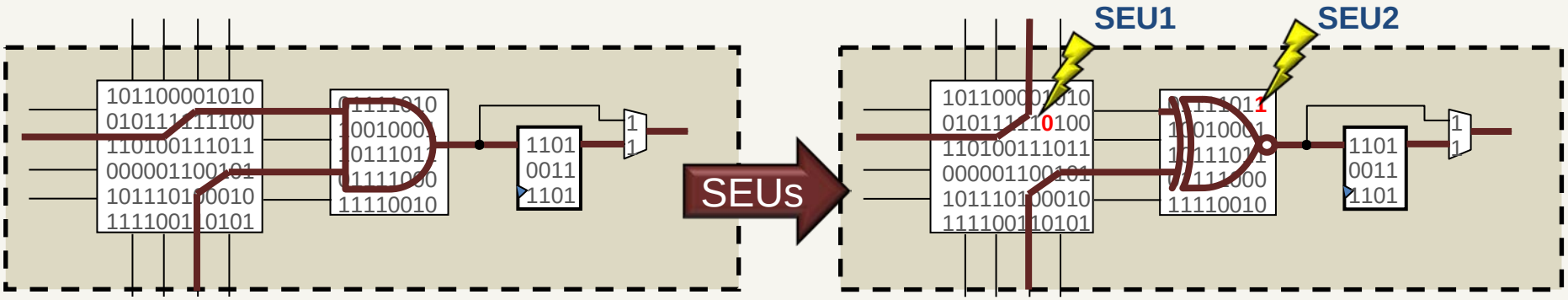

- In an SRAM-based FPGA, most SEUs happen in the Configuration memory

Xilinx Virtex4 FX60 Device		
Configuration Bits	17,004,288	79.8%
User BlockRAM Bits	4,276,224	20.0%
User Flip-Flops	50,560	0.2%

SEU effects in MGTs

- Previous MGT SEU work has been done
  - Morgan – Aurora with commercial V5
    - Upset-Induced Failure Signatures, Recovery Methods, and Mitigation Techniques in a High-Speed Serial Data Link for Space Applications – NSREC 2008
  - Monreal – 5QV MGT characterization
    - Radiation Test Report, Single Event Effects, Virtex-5Qv Field Programmable Gate Array, Multi-Gigabit Transceivers - 2011
    - Characterized

      failure rates and

      failure mechanisms

Table 1. Event Rate Summary (Source: CRÈME-MC, Geosynchronous Orbit, nominal conditions, with a 0.150" thick Aluminum enclosure).

EVENT TYPE		UNITS	EVENT RATE (/DAY)	DAYS	YEARS
TX BE		/CHANNEL	2.13E-04	4,684	12.8
RX BE		/CHANNEL	5.58E-04	1,790	4.9
TX LOL :	TOTAL	/CHANNEL	6.03E-05	16,581	45.4
	RESYNC	/CHANNEL	5.47E-05	18,297	50.1
	RE-INIT	/CHANNEL	6.21E-06	161,031	441.2
RX LOL :	TOTAL	/CHANNEL	1.19E-04	8,402	23.0
	RESYNC	/CHANNEL	1.14E-04	8,774	24.0
	LONG RESYNC	/CHANNEL	2.77E-06	361,406	990.2
	TOTAL REINIT	/CHANNEL	1.20E-05	83,018	227.4
RX REINIT LOL :	RX BUFFER RESET	/CHANNEL	4.38E-06	228,487	626.0
	RX RESET	/CHANNEL	9.42E-07	1,061,828	2,909.1
	RX CDR RESET	/CHANNEL	8.43E-08	11,862,579	32,500.2
TILE LOL:	GTX TILE RESET	/CHANNEL	2.10E-06	476,349	1,305.1
	DRP SCRUB	/CHANNEL	6.82E-09	146,545,483	401,494.5
MULTIPLE MGT:	SINGLE TX	/TILE	3.69E-05	27,125	74.3
	SINGLE RX	/TILE	1.80E-04	5,548	15.2
	MULTI-ELEMENT	/TILE	2.42E-05	41,346	113.3
	MULTI-TILE	/TILE	2.84E-08	35,221,313	96,496.7

Radiation Test Report, Single Event Effects, Virtex-5Qv Field Programmable Gate Array, Multi-Gigabit Transceivers, pg 9

SEU effects in MGTs

- SEU in MGTs are expressed as either
  - Corruption of transmitted data (bit errors)

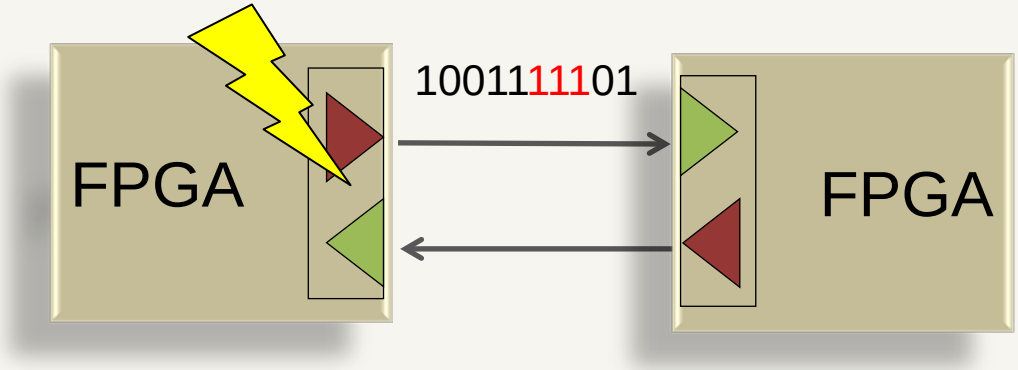

  - Failure of RX/TX mechanisms (component failure)

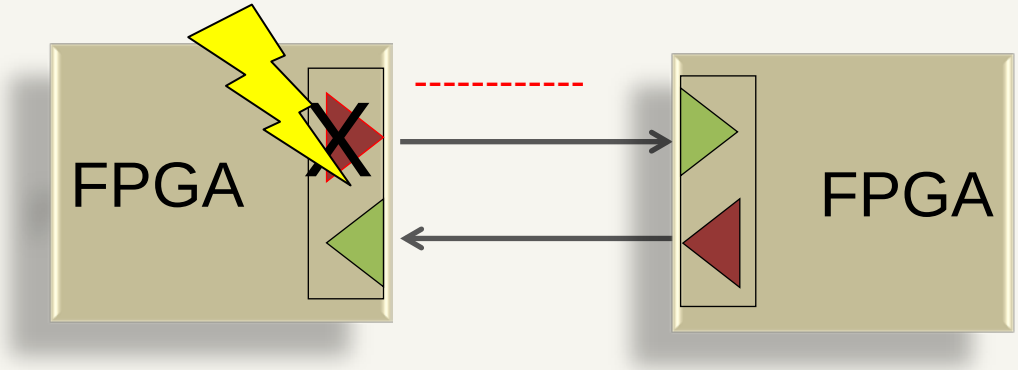

MGT Architecture on Xilinx FPGAs

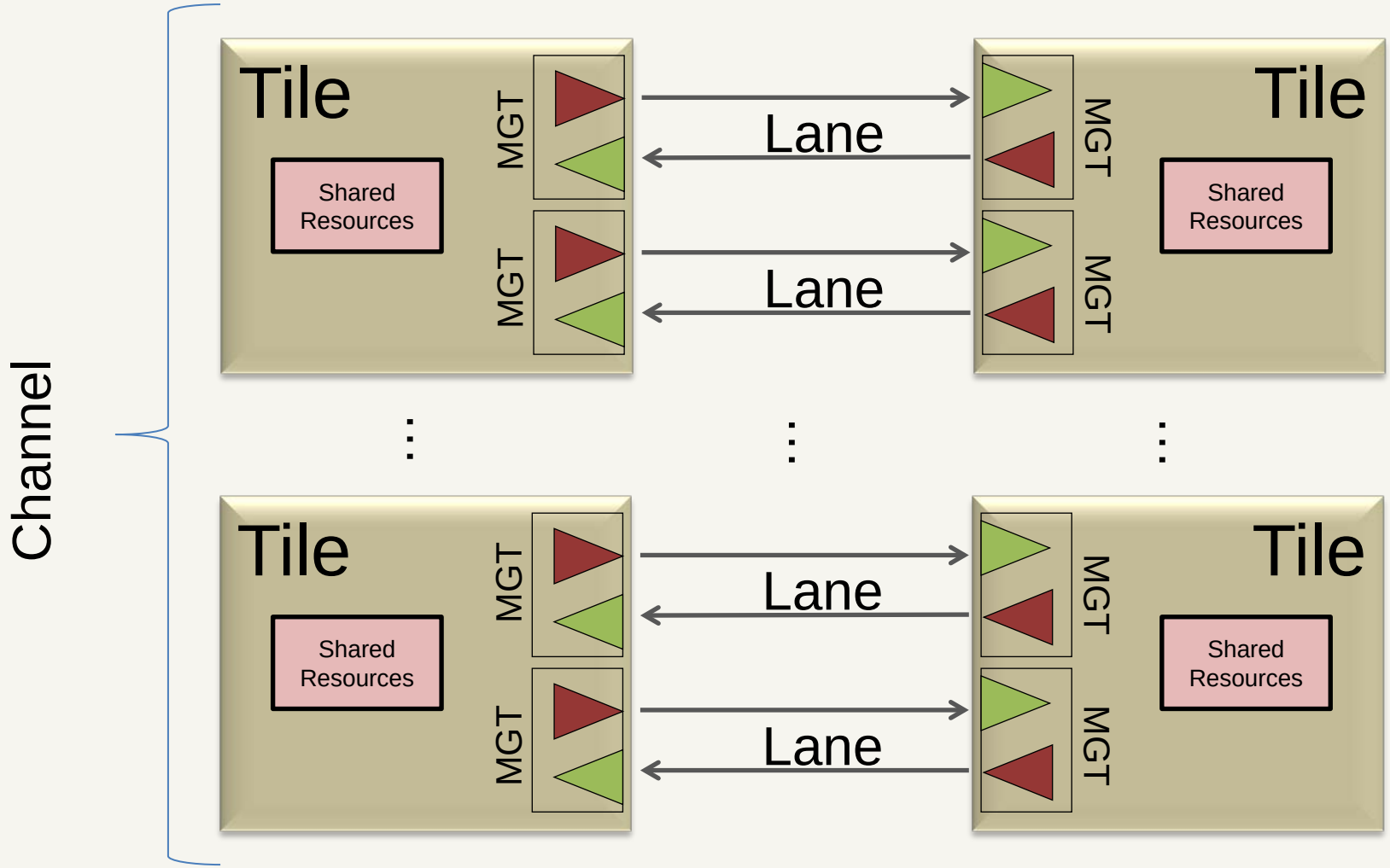

Xilinx MGT Tile

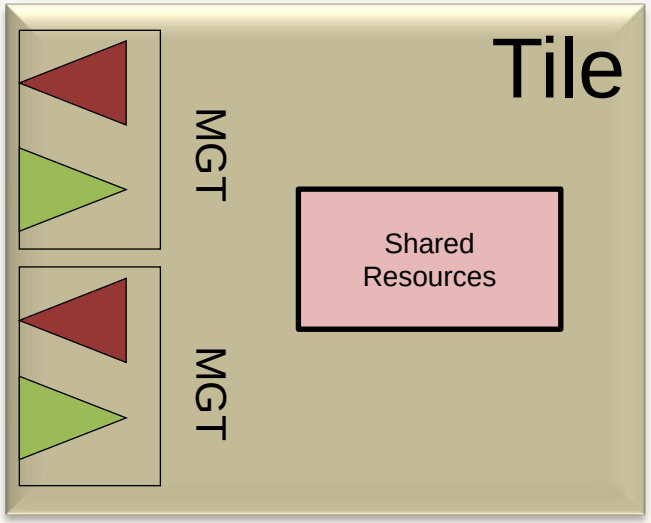

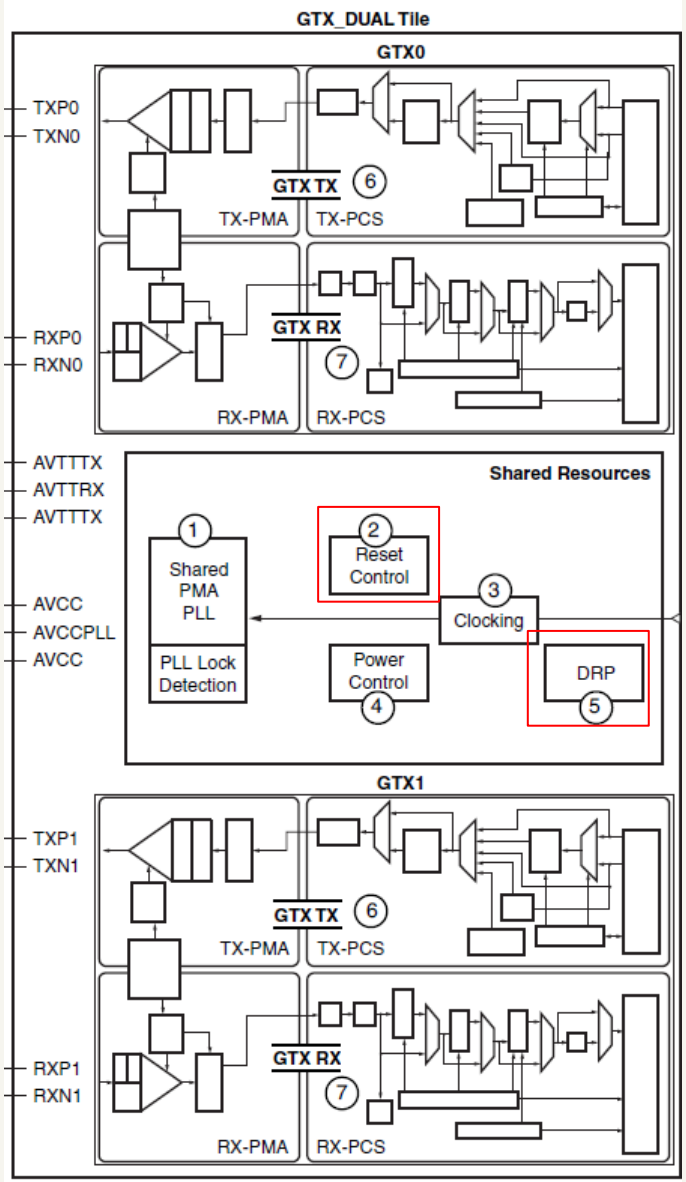

Xilinx Corporation Virtex-5 FPGA RocketIO GTX Transceiver User Guide (ug198) , pg 28

MGT RX/TX Detail

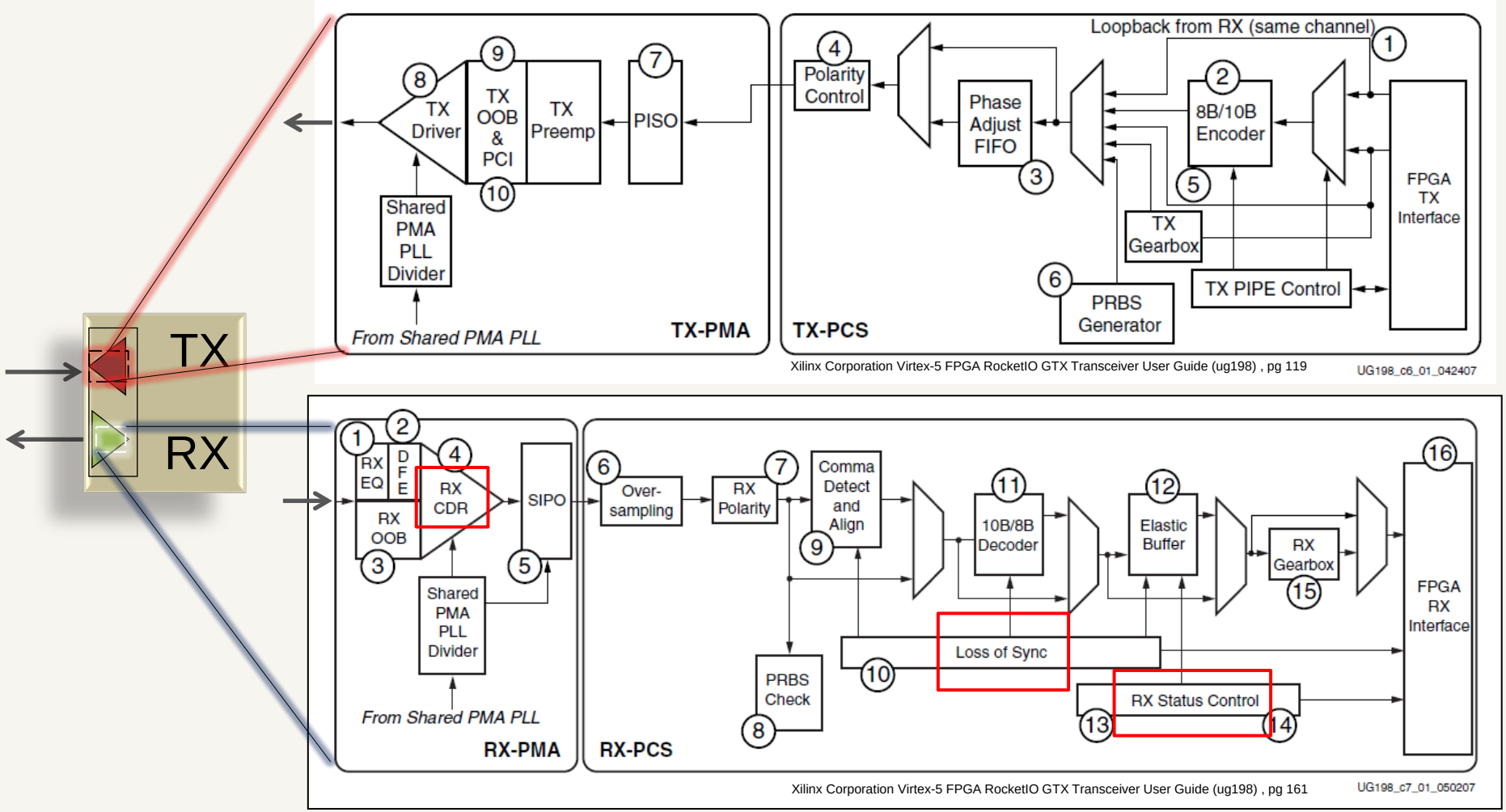

Aurora Radiation Test Motivation

1. Understand Aurora's ability to repair the communication link
2. Determine error signatures of different upsets
3. Correlate Aurora faults with known MGT fault mechanisms
4. Identify recovery techniques

Xilinx Aurora Protocol

- Protocol for serial data transmission
  - OSI link level protocol
  - Lightweight
    - ~500 slices, no BRAM
    - Minimal transmission overhead
  - Supports bonding of multiple lanes
- Easy to implement
  - IP core available via Xilinx Coregen
  - Simple framing interface
- Encompasses MGT tile
- Higher protocol levels easily built on top

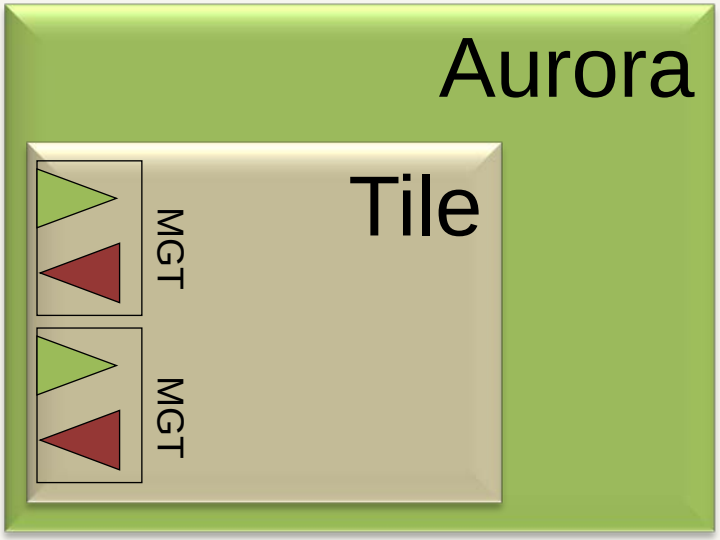

Xilinx Aurora Protocol - Features

- Simple Error Detection - No error correction
  - Reports tile level errors
  - Detects framing errors
- Design may contain PLL
- Instantiates an MGT tile
- Coregen sets MGT parameters

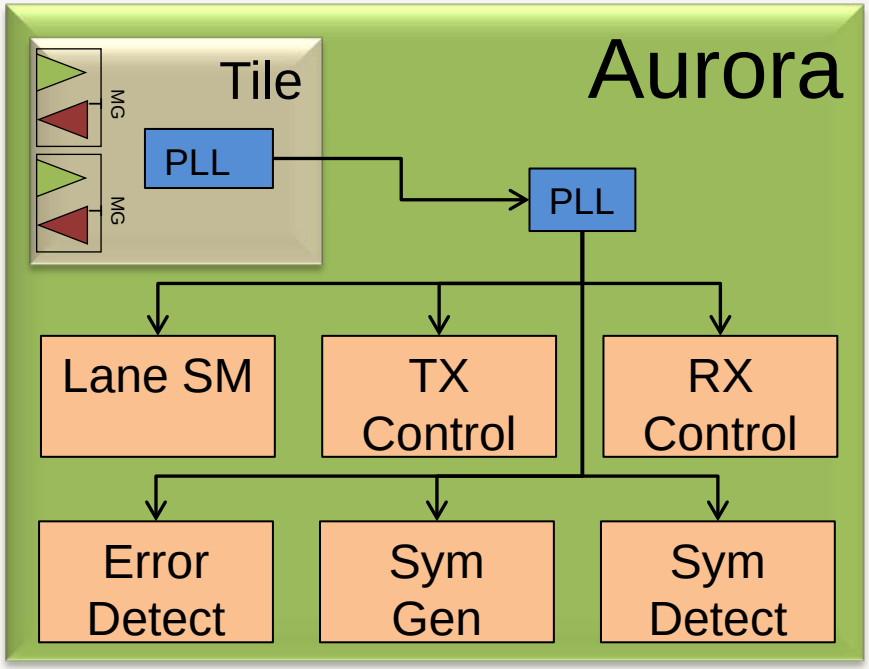

Test Setup – Error Output

- Three levels of error signals

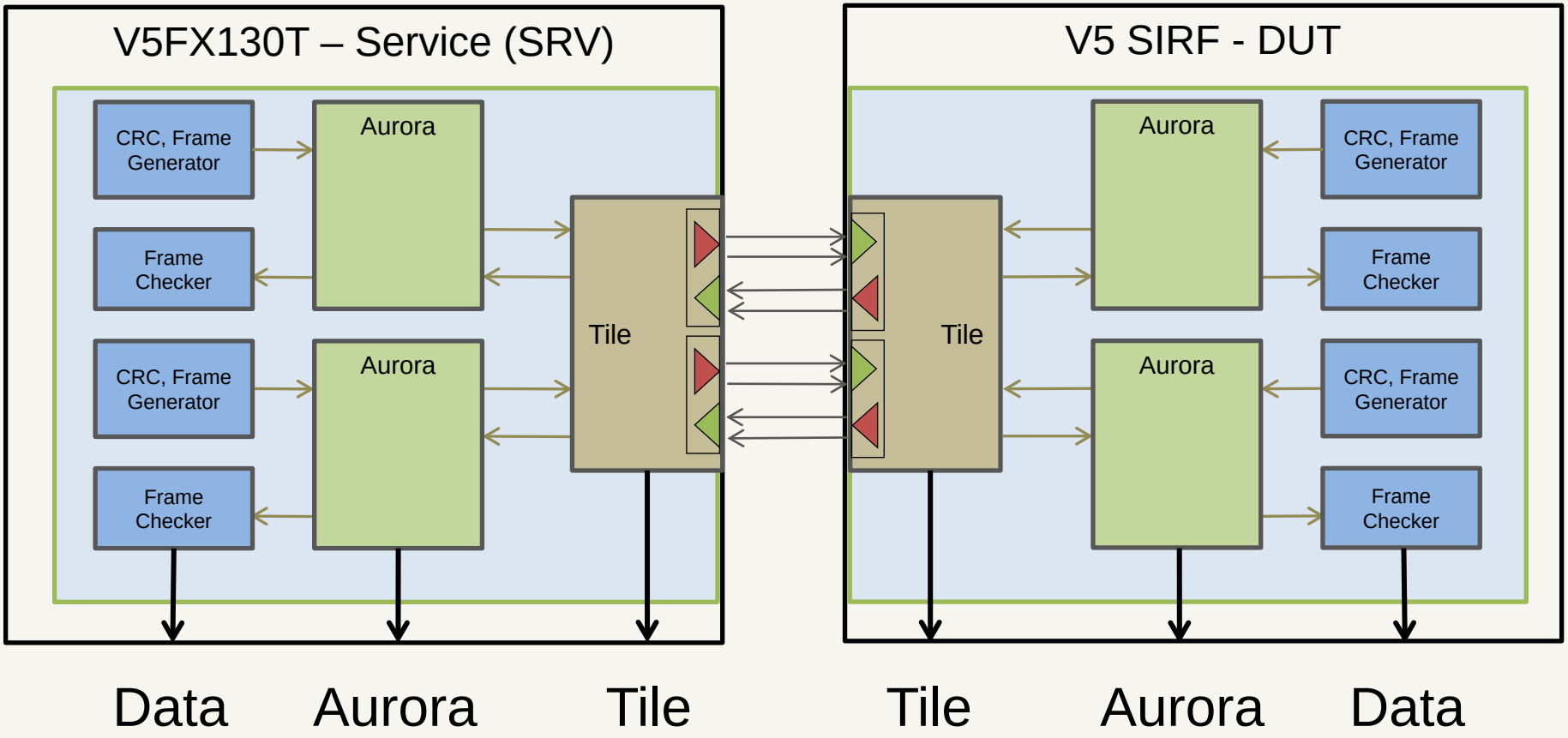

Test Setup – Recovery Steps

1. Self Recovered
   1. Bit-errors, etc.
2. Aurora Recovered
   1. RX/TX Reset
3. Manually Recovered
   1. Aurora Logic Reset
   2. Aurora PLL Reset
   3. CDR Reset
   4. Tile Reset
   5. Configuration Scrub
   6. Configuration Scrub with GLUT Mask Off
4. Reconfigure

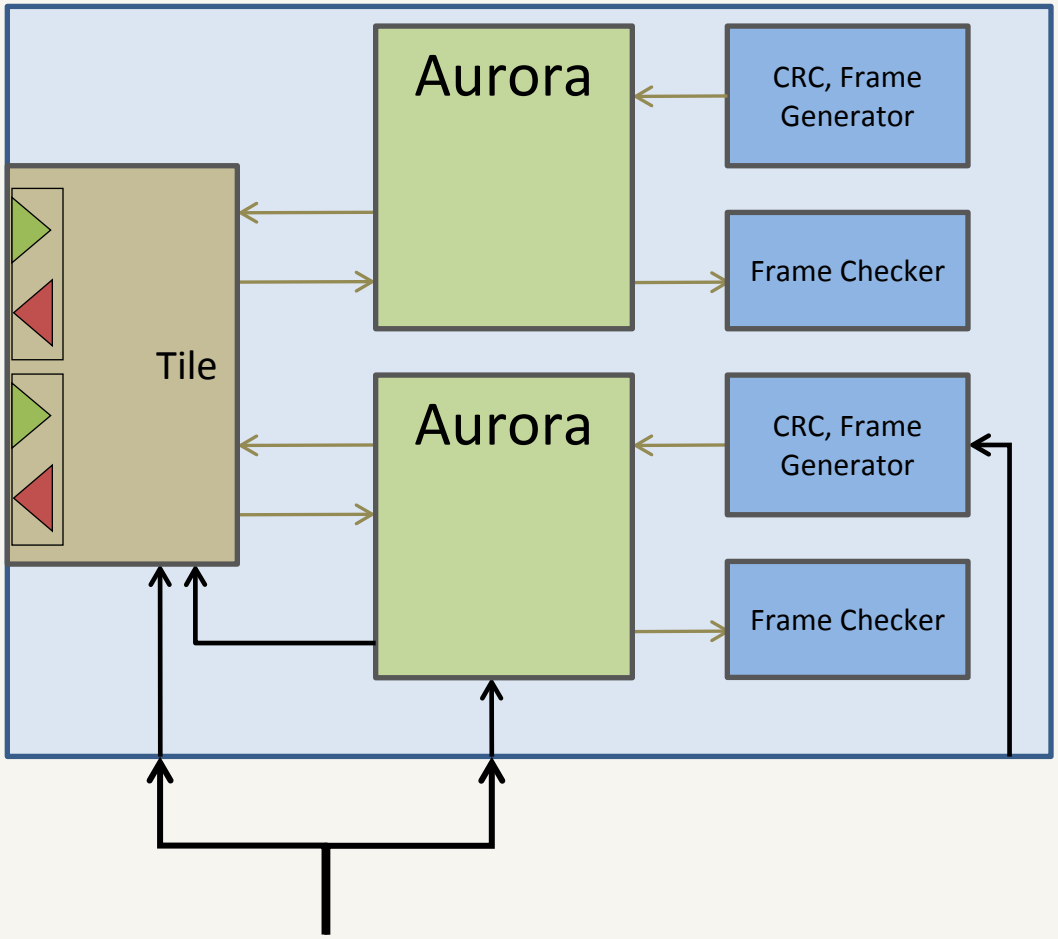

Testing Summary – Texas A&M

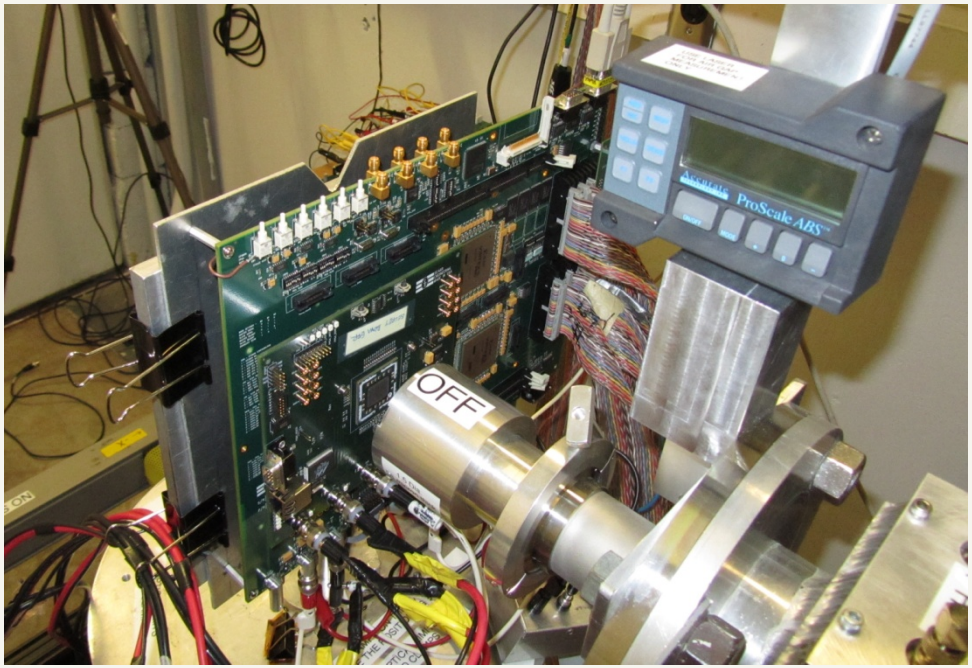

March 21-25, 2011 – Texas A&M (College Station)

- 14 hours of beam time
  - Neon-1, Argon, Xenon, and Krypton
  - 3.1, 10.2, 22.9, and 46.1 MeV-cm^2/mg

Special thanks to Sandia, Seakr Engineering and Xilinx for their help and support on this test.

Test Results – Recovery Types

- 97% of events required no intervention
- All but .12% of events recovered with manual intervention

Breakdown of Manually Recovered

Manual Recovery Method	%
Aurora Reset	28.4%
Aurora Logic PLL Reset	28.4%
CDR Reset (Lane Level)	0%
GTX Reset (Tile Level)	12.3%
Scrub with GLUT Mask On	21.0%
Scrub with GLUT Mask Off	9.9%
Total	**100%**

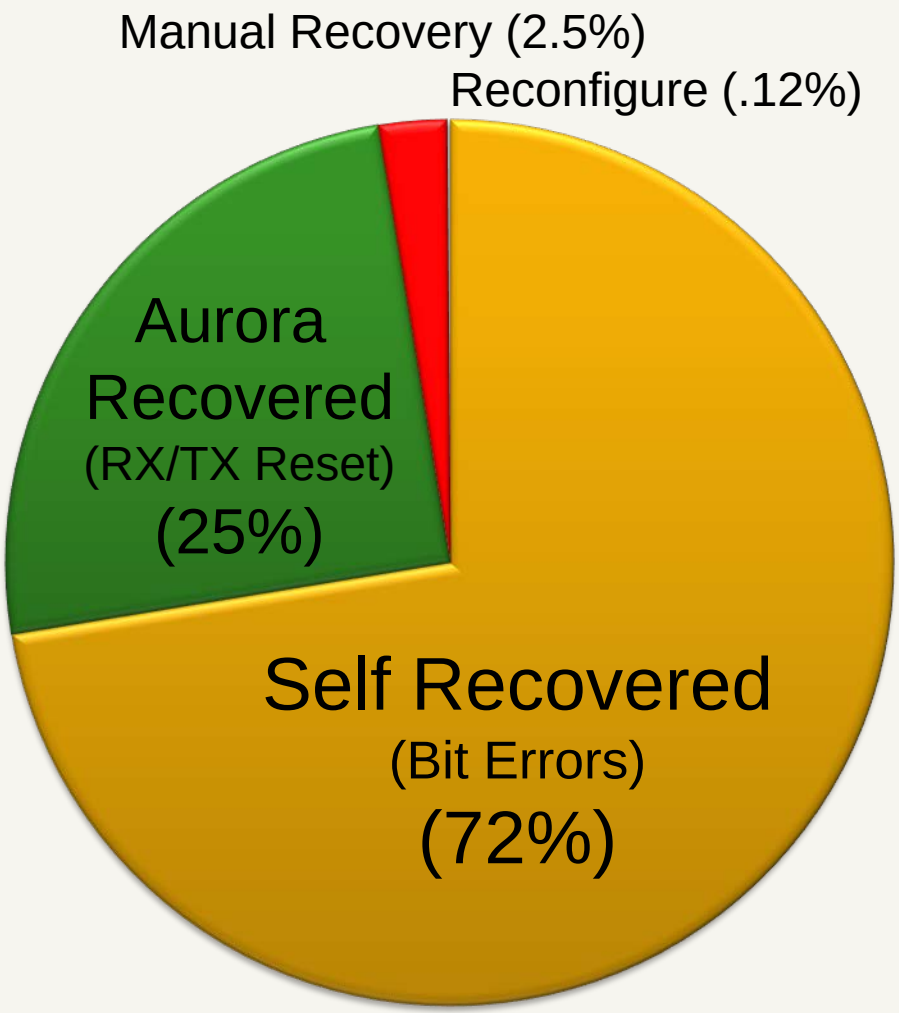

Data Analysis – Error Signatures

- **Signature** – Set of first set of signals seen in an event before any other error signals
- These signatures give insight in to possible source of event
- Several surprising discoveries from this analysis
- Example log file (signature bolded) -

…
Event Start, 030f9ee4ae, **RX Disparity**
Event End, 030f9ee5b4, Soft Error, CRC Failure
…
Event Start, 03221dfdec, **CRC Failure**
Event End, 03221dfe93,
…

Data Analysis – Error Signatures

Level	Signature	DUT	SRV	Total
Tile	RX Disparity, RX Not in Table	592	630	**1222**
Tile	RX Realign	12	0	**12**
Tile	RX Buffer Error	15	4	**19**
Tile	TX Buffer Error	103	0	**103**
Aurora	Hard Error, Soft Error	12	0	**12**
Aurora	Frame Error	9	5	**14**
Aurora	RX Reset, TX Reset	4	0	**4**
Data	CRC Failure, Missing Frame	929	409	**1338**
Data	Persistent CRC	14	0	**71**
All	**Total**	**1719**	**1076**	**2795**

Test Conclusions

- With Aurora protocol 97% of upsets are recovered
- For other 2.5% - Recovery mechanisms could be added to Aurora or other protocols with minimal effort
- MGT tile error signals do not report all tile level upsets - possibly ~50% of bit errors unreported
- CRC check necessary to catch all bit errors

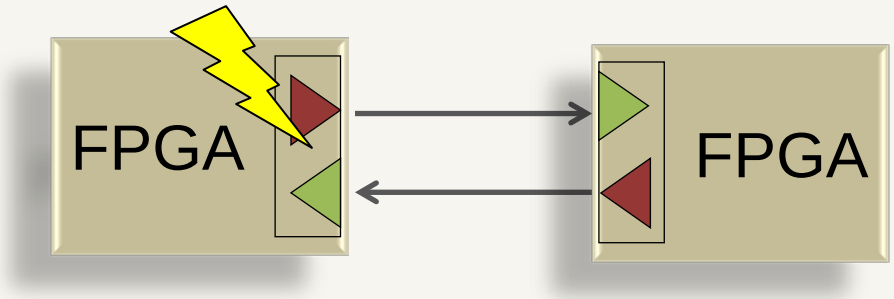

Future Work
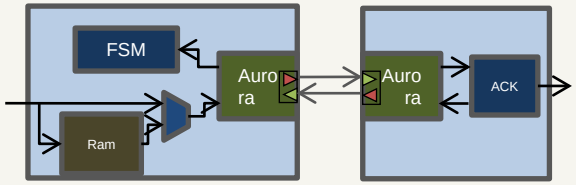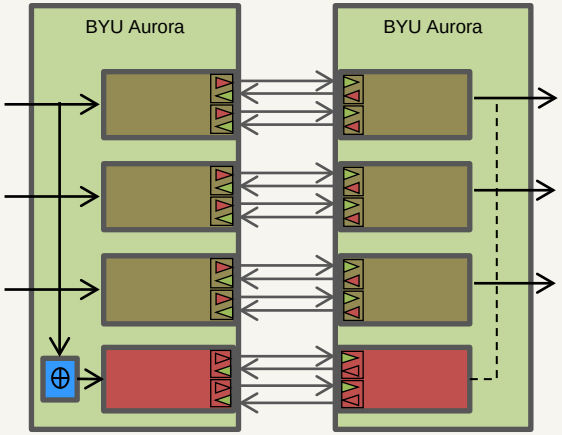
- Additional radiation testing performed July 2011
  - Data analysis ongoing
  - Analysis on availability, event durations, recovery times, multi-lane events
  - DRP Scrubbing
- Development and testing of mitigation techniques
  - Lossless protocols
    - Dual Channel, RAISERIO
  - Low-cost protocol
    - LRP