NASA Grants 80NSSC18K0493 and 80NSSC18K0721
Radiation Modeling and Assurance Software Tool Integration

Arthur Witulski Brian Sierawski

June 21, 2018, Vanderbilt University

NASA Sponsors: Ken LaBel, NEPP, John Evans, OSMA

Vanderbilt-NEPP Work 2017-2018 FY

I. Project I: Continue development of the SEAM platform

- Coverage checks
- Incorporation of Requirements in SysML and GSN
- Develop interface with industry standard SysML tool

II. Project II: Maintenance, development of single event tools

- Crème/Crème MC
- R-Gentic
- Others

III. Both: Plan integration path for existing tools and SEAM

Year 3 SEAM Task #1: Coverage Analysis

Vanderbilt Engineering

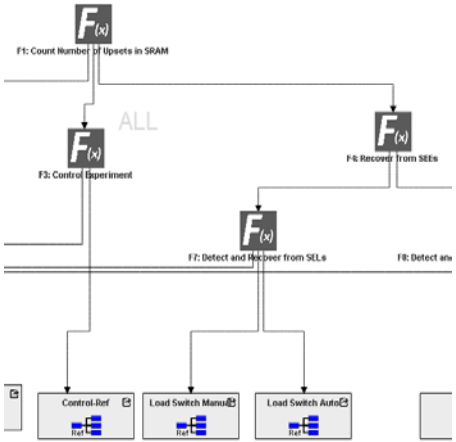

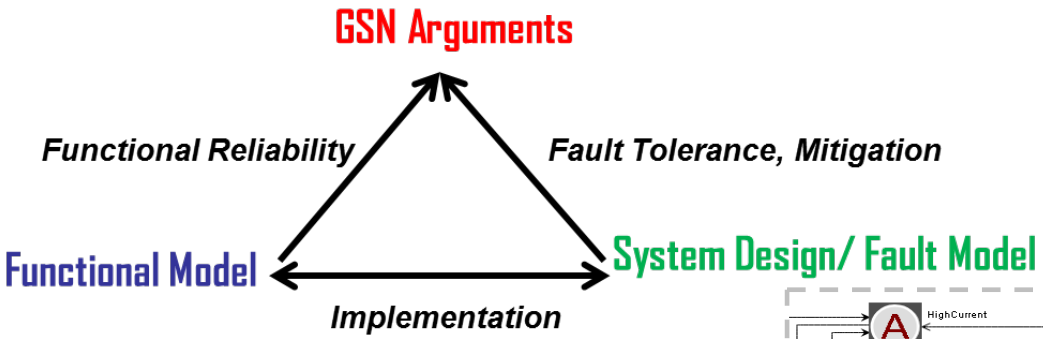

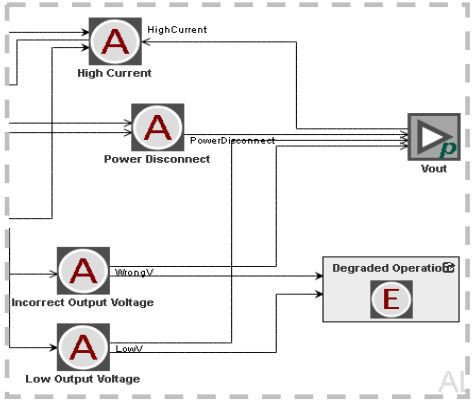

- **Coverage analysis**
  - tracing links between the SEAM models
  - identifying “incorrect” and /or “missing” links.
- **Increasing model complexity and scale necessitates automation**
- **Checking links between SysML & GSN enforces GSN completeness**

SEAM Coverage Definition

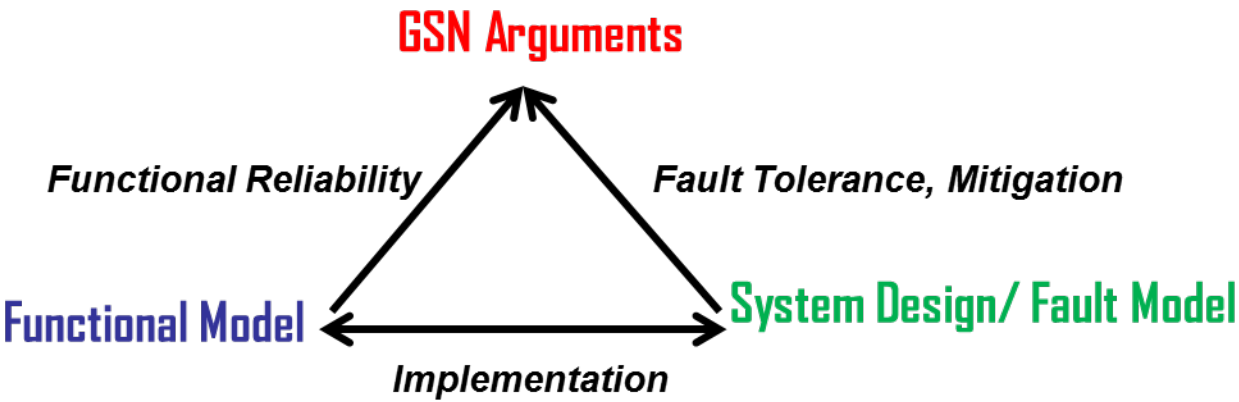

"Coverage" in SEAM model is assessed by checking if each

- low-level function is associated with one or more components that implement it.
- component in the system model implements one or more functions.
- fault path in the system design is accounted for in a GSN argument.
- fault-effect traceable from a failure mode is accounted for in a GSN argument.
- fault-mitigation action traceable from a failure mode is accounted for in a GSN argument.

Coverage Matrix Screenshot: Parts List

Vanderbilt Engineering

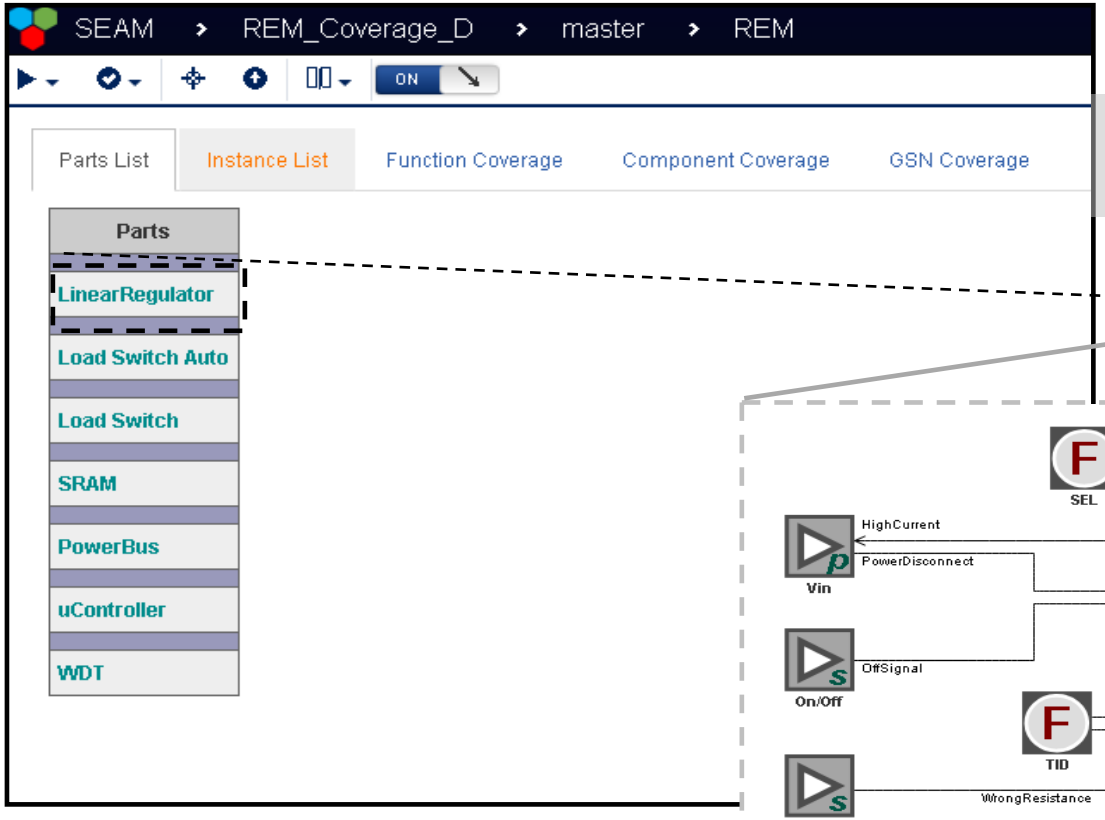

Clickable links that leads to the part model

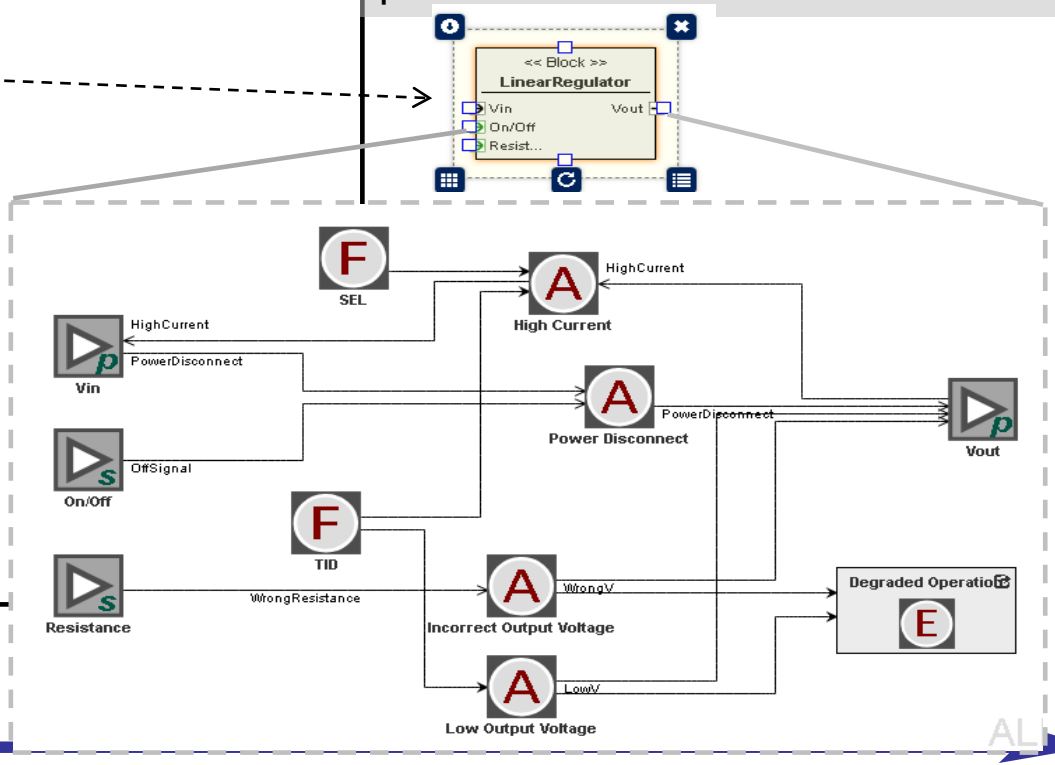

Coverage Matrix Screenshot: GSN Coverage

Vanderbilt Engineering

Parts List | Instance List | Function Coverage | Component Coverage | GSN Coverage

Component	Fault	Effect	Response	GSN Node	Tag	Status	Result	Information Source	Action
U22 : LinearRegulator				Goal : 45	Mitigation	Developed	Yes	Instance	Completed
	TID			Goal : 42	Radiation Check	Developed	Yes	Part	Completed

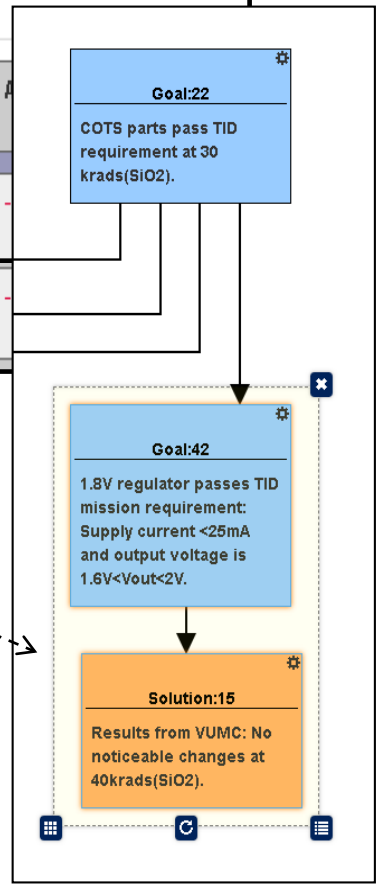

Link to GSN argument

SEAM: Requirement Models

- SysML style Requirements modeling.
- Support SysML requirements relationships:
  - Sub-requirements
  - *Refine* relationship-refinement of another req.
  - *Trace* relationship between Req. and model element
  - *Copy* of another requirement
  - *Verify* relationship between Req. and test case
  - *Satisfy* if Req. is satisfied by a design element
- Allow Import/ Export Requirements Models to MagicDraw©

Example Requirements model in SEAM

Vanderbilt Engineering

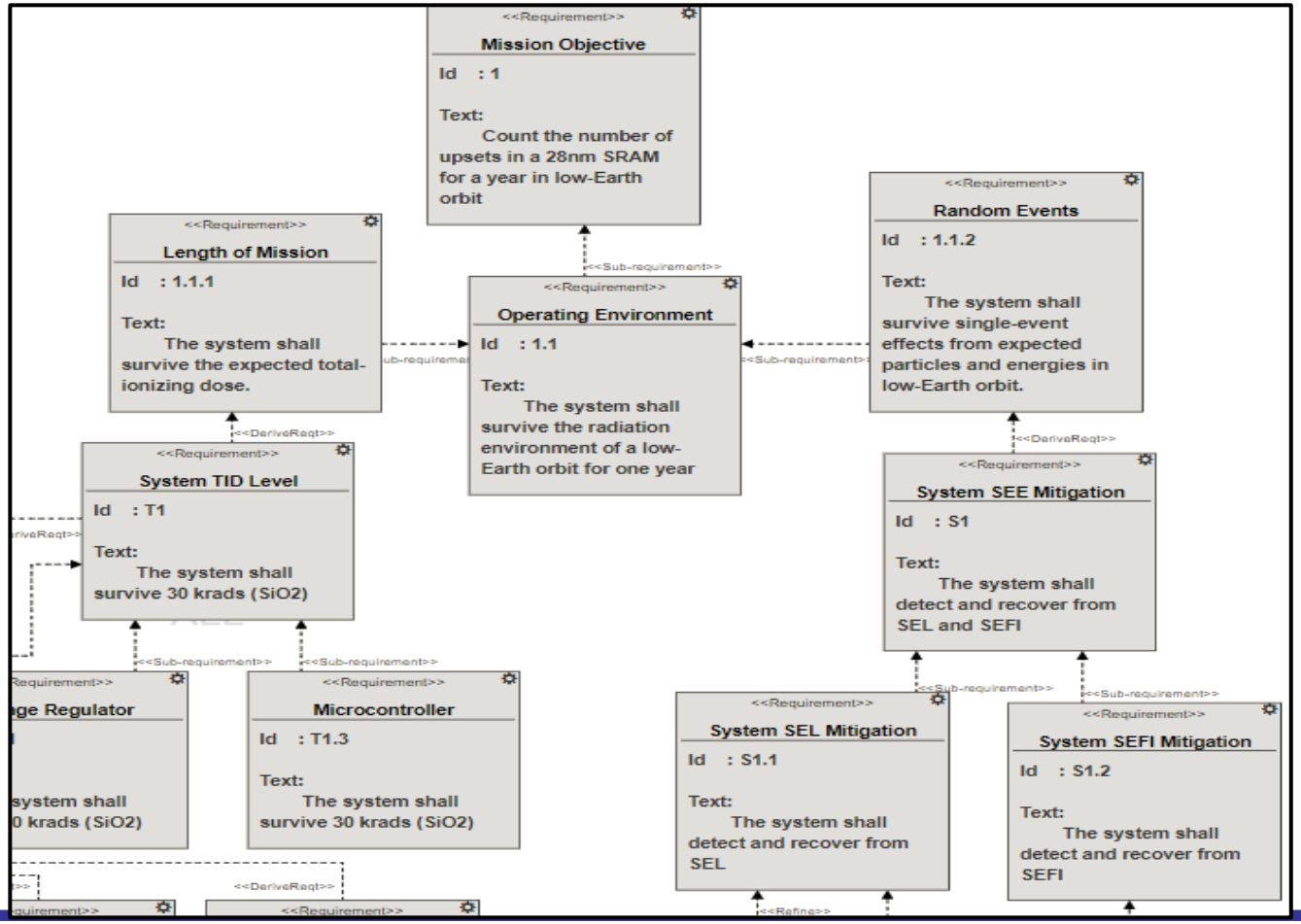

Boxes represent requirements
Lines define relationships

Next Steps: Requirements Coverage

Vanderbilt Engineering

- **Coverage:**
  - Allow cross-linking requirement models with other SEAM models.
  - Tracing requirements coverage
    - Functional (operation and mitigation)
    - Assurance arguments (radiation reliability).

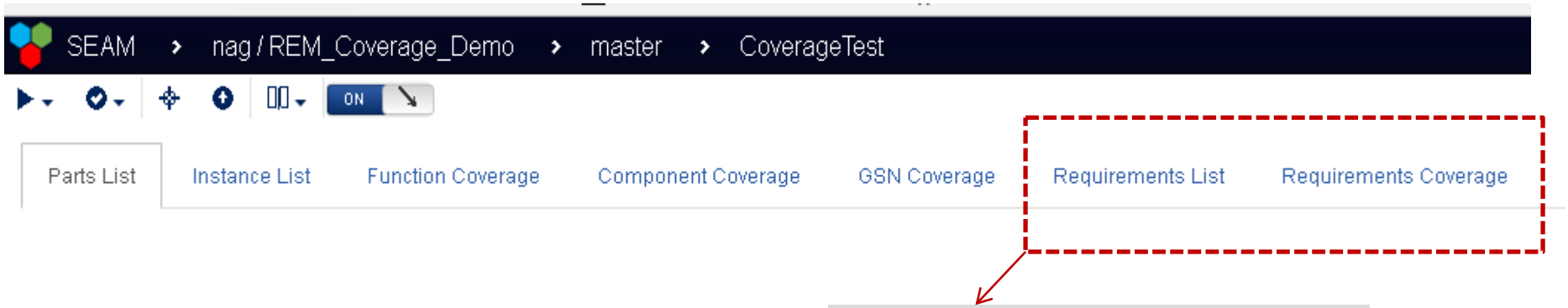

New Entries to Coverage Matrix

Workflow of Spacecraft Modeling

Vanderbilt Engineering

Mission Assurance

Mission Planning	Environment Definition	Functional Design	Design Parts-Selection	Fault Modeling	Documen-tation
R-Gentic SLU CubeSat DB	Spenvis PSYCHIC AP8 AP9	SEAM: SysML, Func. MagicDraw SysML, Func.	Berg SEU NOVICE SEAM: SysML Rad parts DB CRÈME/CRÈME MC Xapsos Prob. Env.	SEAM: SysML, Block diagram Fault effects/ mitigation	GSN

- Typical software apps for radiation design and assurance flow
- Concept can be generalized to thermal, vibration, etc.
- Eventually detect cross-domain interactions, e.g., thermal-electrical

Software Modeling Tools

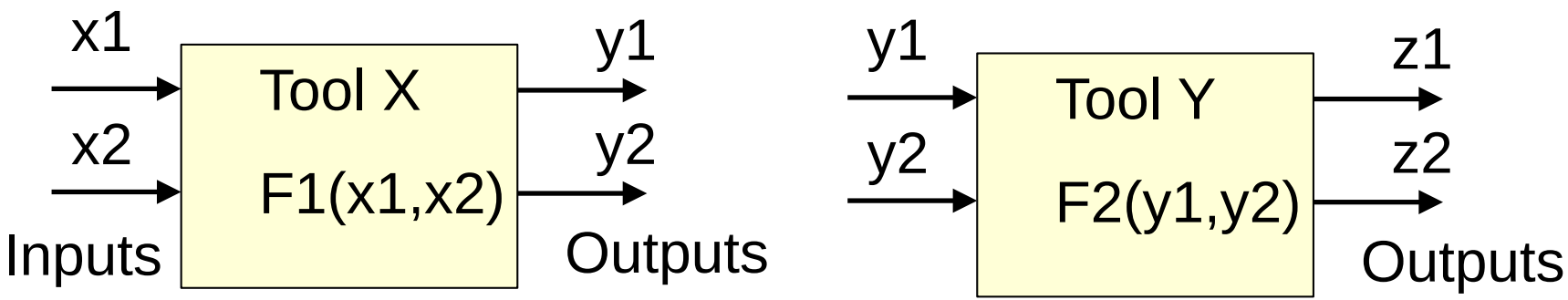

- Every tool “consumes” inputs and “produces” outputs
- Ideally the outputs from one tool could be sent directly to the input of another tool.

Document Centric Design and Assurance Flow

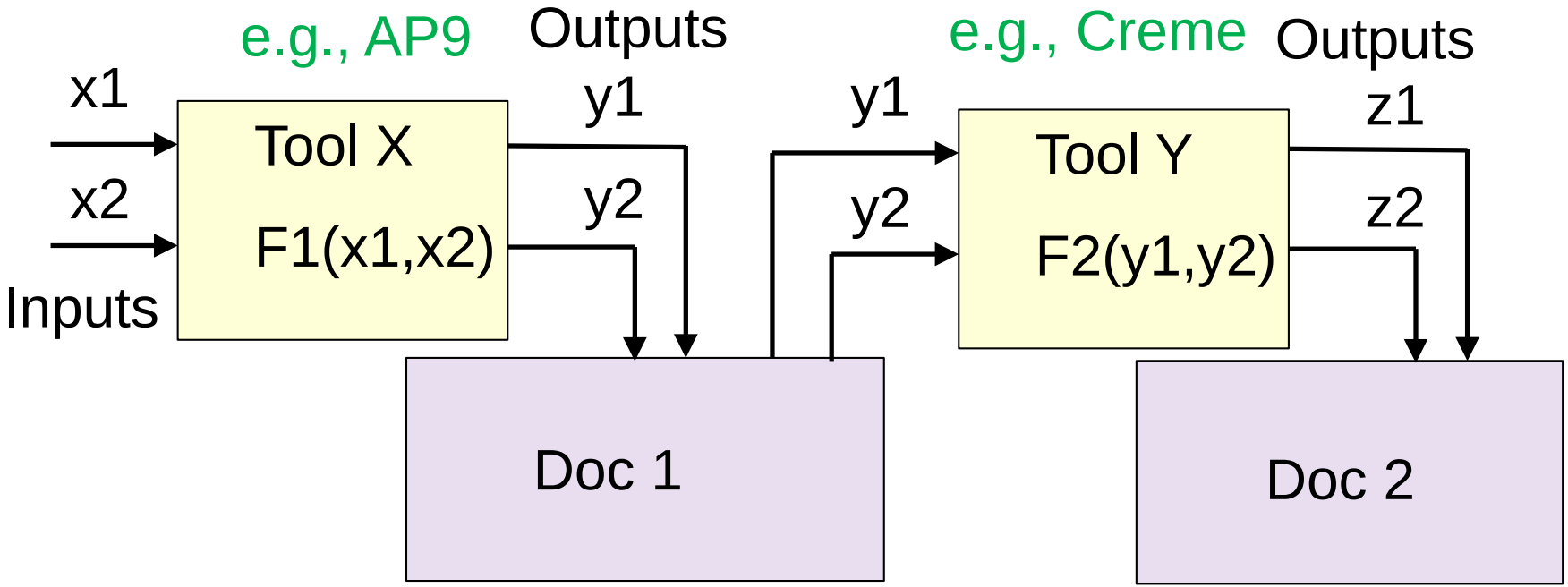

- Outputs are stored in a document
- Have to be extracted from doc to use in next tool
- Problems with version control between documents

Model-Centric Design and Assurance Flow

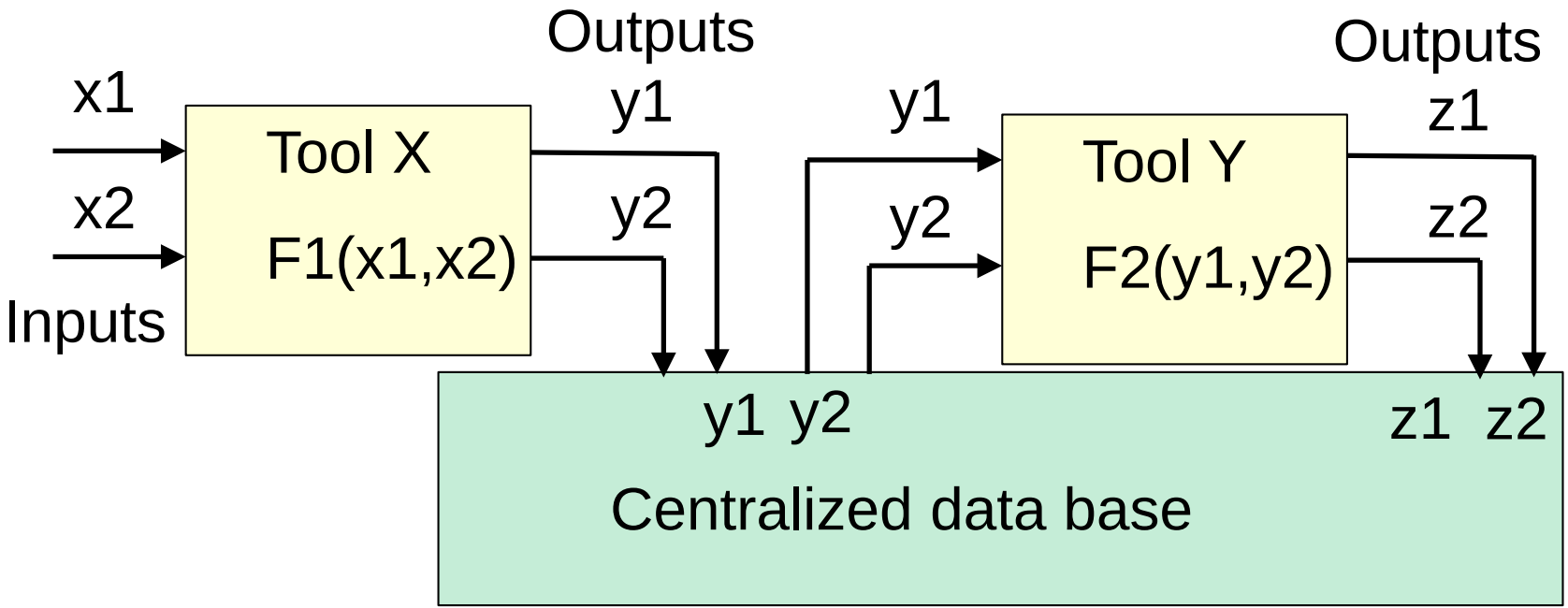

- Inputs and outputs are stored in the same database
- Database can automatically track versions

Safety-Case Design and Assurance Flow

Vanderbilt Engineering

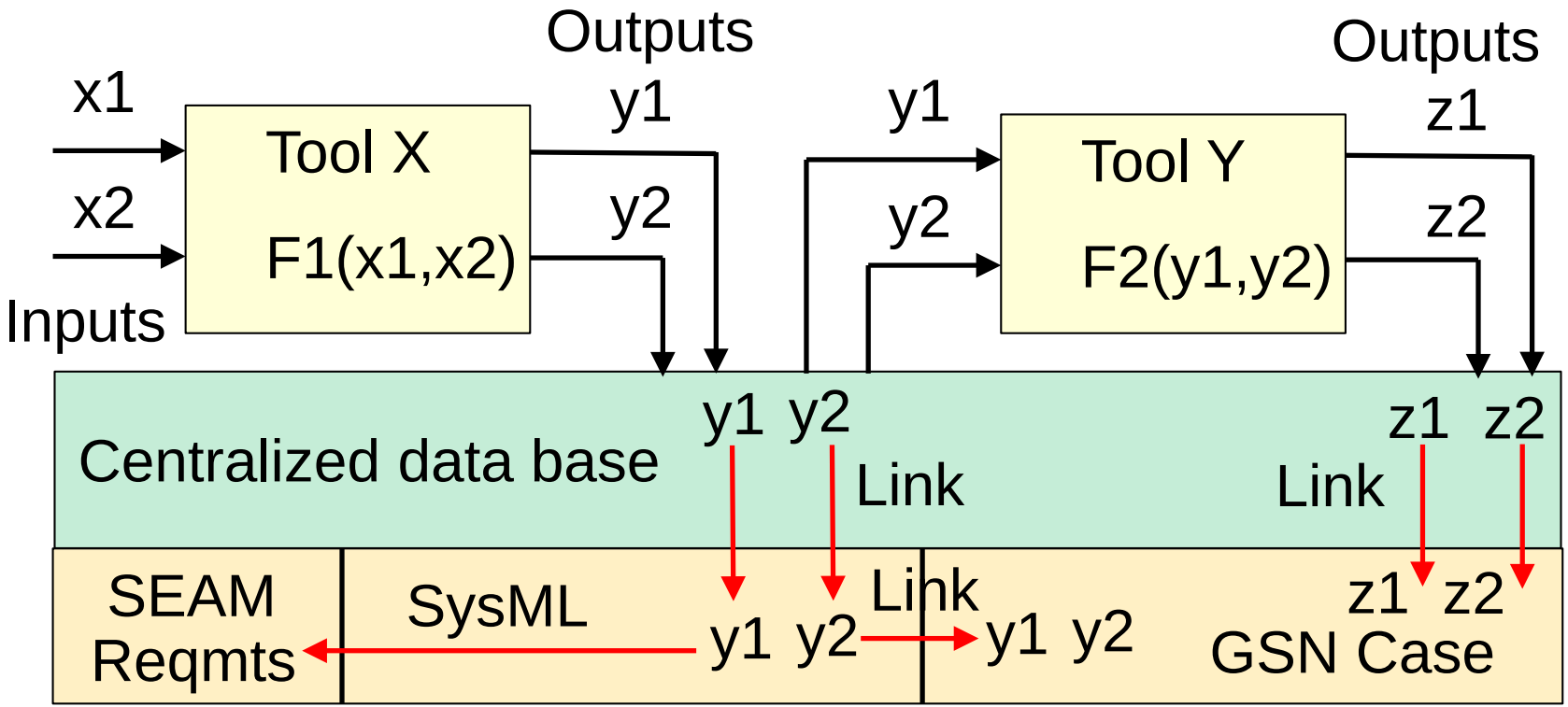

- Outputs from analysis tools used in SysML models
- Outputs from analysis tools: evidence in GSN case
- Links possible between database, SysML model, and GSN case

Integration of Project Design Aspects

- Central Repository for System and Design Information
  - All design/assurance information resides on one platform
  - Need version control
- Requirements also need to be incorporated
  - Requirements can reside in SysML, GSN
- Model Re-use
  - Can have reusable templates for SysML, GSN
  - Linking of components, libraries
- Assurance case can be constructed throughout design and assurance cycle

CRÈME Website

Vanderbilt Engineering

- ISDE hosts the CRÈME tool suite for predicting **on-orbit error rates** and proton **total ionizing dose** in microelectronics
- While there are multiple open-access options available, none are U.S.-based and controlled except for CRÈME
- ISDE maintains the code and operation of CRÈME, ensuring trust as well as continuing access
- Supports over 2000 users!

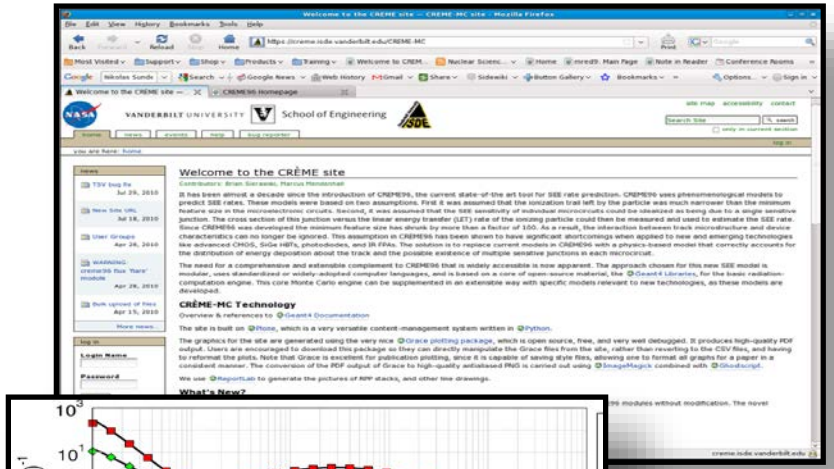

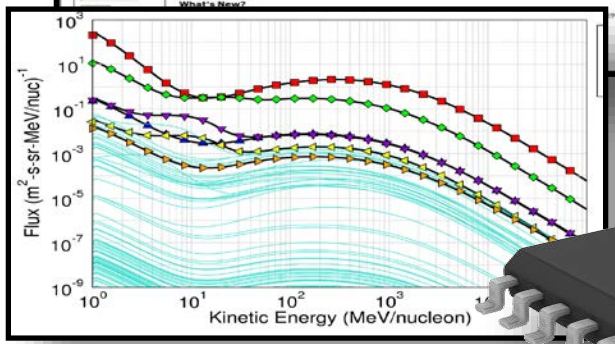

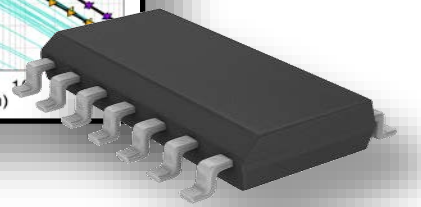

https://creme.isde.vanderbilt.edu

CREME96 Toolsuite

- **Near-Earth particle environment (Sawyer & Vette ‘76)**
  - Extracted from tables of AP8 proton fluxes
  - User selects between solar minimum and solar maximum
- **Geomagnetic shielding (Nymmik ‘91) [GTRN]**
  - Generates a geomagnetic transmission function (percent vs rigidity)
  - User selects between quiet and stormy conditions
- **Galactic cosmic ray environment (Nymmik ’92) [FLUX]**
  - Relates GCR intensity to Wolf sunspot number
  - Solar event based on Oct 1989 event, worst-week, worst-day and peak 5 min. fluxes
- **Transport through spacecraft shielding [TRANS]**
  - Continuous slowing down approximation with nuclear fragmentation
- **Linear energy transfer [LETSPEC]**
  - Folds space environment into LET spectrum
- **Heavy-ion and proton upset rate predictions [HUP][PUP]**
  - Calculate on-orbit error rates using cross section curves

CREME96 Toolsuite

Vanderbilt Engineering

- **Near-Earth particle environment (Sawyer & Vette '76)**
  - Extracted from tables of AP8 proton fluxes
  - User selects between solar minimum and solar maximum
- **Geomagnetic shielding (Nymmik '91) [GTRN]**
  - Generates a geomagnetic transmission function (percent vs rigidity)
  - User selects
- **Galactic cosm**
  - Relates GC
  - Solar event based on Oct 1989 event, worst-week, worst-day and peak 5 min. fluxes
- **Transport through spacecraft shielding [TRANS]**
  - Continuous slowing down approximation with nuclear fragmentation
- **Linear energy transfer [LETSPEC]**
  - Folds space environment into LET spectrum
- **Heavy-ion and proton upset rate predictions [HUP][PUP]**
  - Calculate on-orbit error rates using cross section curves

Value was integration of tools!

New CRÈME Configuration

Vanderbilt Engineering

- **Performance issues have motivated upgrades to hardware, operating system and content management system**
  - Transitioning tools from Plone 3 to Plone 4
    - Fixed CRÈME products
    - Translated database for user file storage
  - Moving to asynchronous tool execution

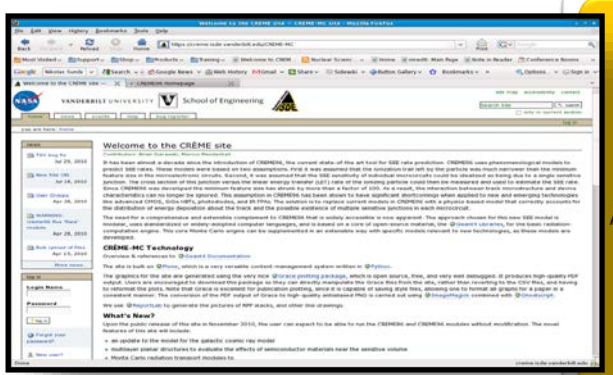

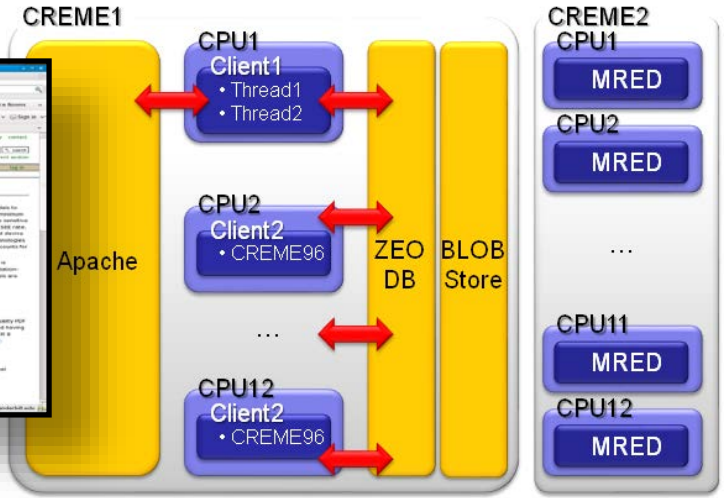

Hardware (2X):
- Pinnacle
- 12 cores
- 128 GB DDR
- 8TB HD
- 240 GB SSD

Software:
- CentOS7
- Plone4
- MRED-960

CRÈME API

- **API to access CREME96 calculations (CFDRC funded)**
  - API enables incorporation of tools into larger flow and decrease load on web server

```
import sys
import xmlrpclib

# Read in flx file
f=open(sys.argv[1],'r')
flx = f.read()
f.close()

proxy = xmlrpclib.ServerProxy('http://localhost:9000') # Connect to server

units=1
thickness=100
(tfx,out,err)=proxy.creme96.trans(flx,units,thickness) # Run transport

# Run PUP
devices=[
    dict({"label":"foo",  "comments":"", "method": 1, "A": 10, "bits_per_device": 1})
]
(pup,out,err)=proxy.creme96.pup(tfx,devices)
print pup
```

API example

CRÈME AP9 Interface

Vanderbilt Engineering

- New environment module provides interface to AP9 through CRÈME (DTRA/NRL funded)
- Exposes short-time calculations of trapped proton environments
- Translates AP9 output into CRÈME compatible proton spectra

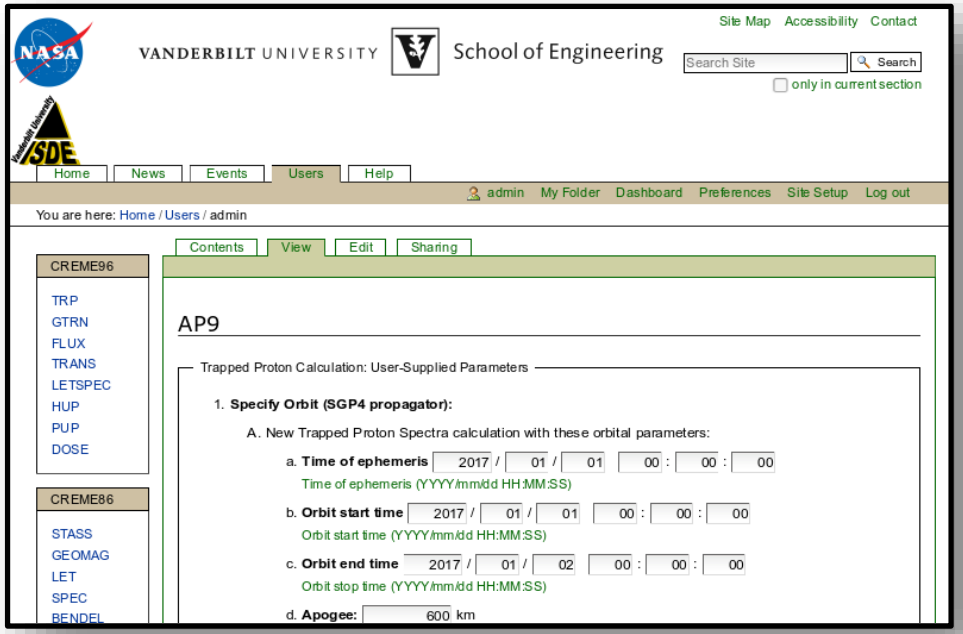

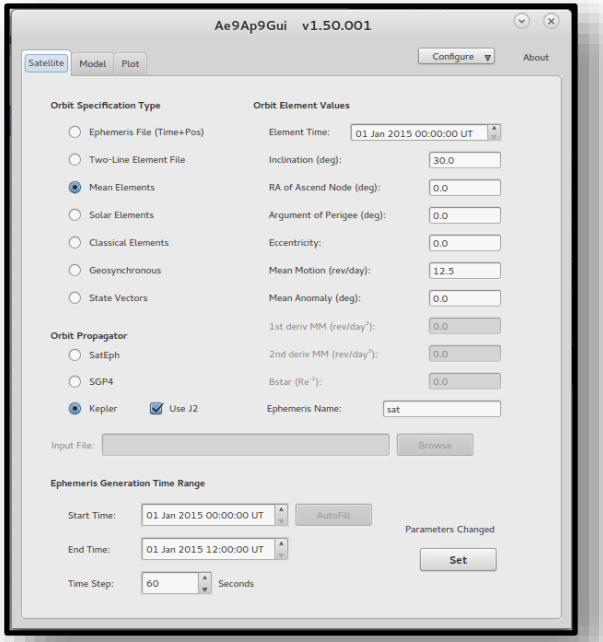

Introduction of Additional RHA Tools

Vanderbilt Engineering

- **R-Gentic (Campola)**
  - Hosting IRAD-developed web-based tool
  - Built and installed application at Vanderbilt
- **TID Confidence Modeling (Xapsos)**
  - Attempting to reproduce published results from TNS 2017
  - Built and installed AE9/AP9 for trapped electrons/protons, ESP for solar event particles
- **System Reliability (Berg)**
  - Reviewing technical report

R-Gentic

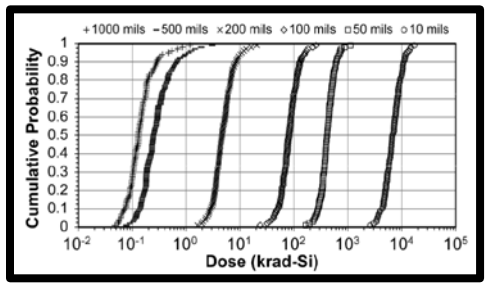

TID Conf. Modeling

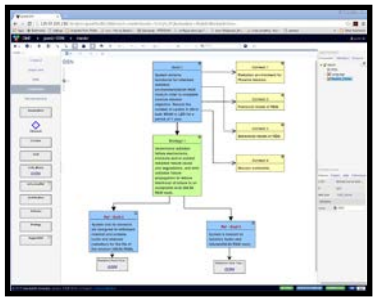

GSN

CREME

AP9

Disjoint Mission Assurance Tools

Vanderbilt Engineering

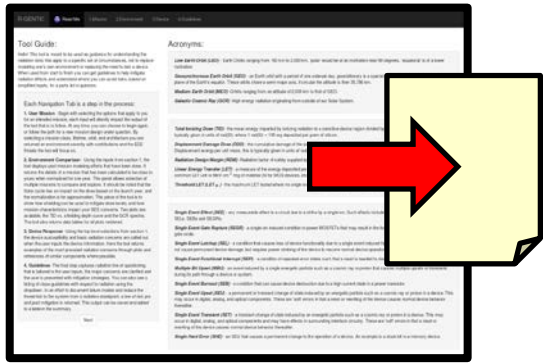

R-Gentic

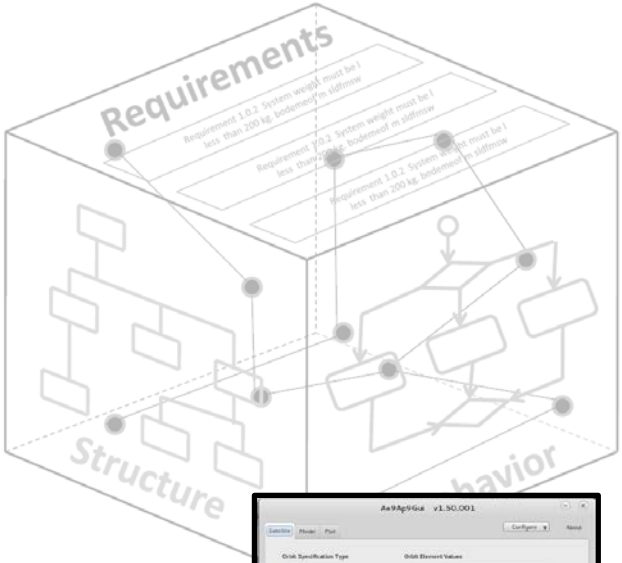

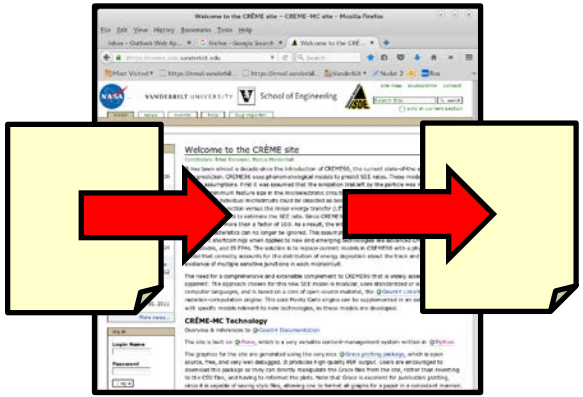

CREME

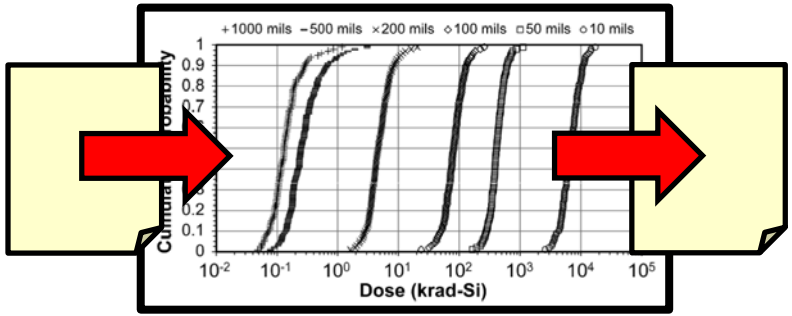

TID Conf. Modeling

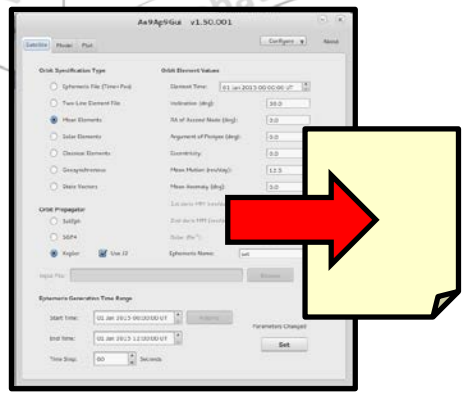

AP9

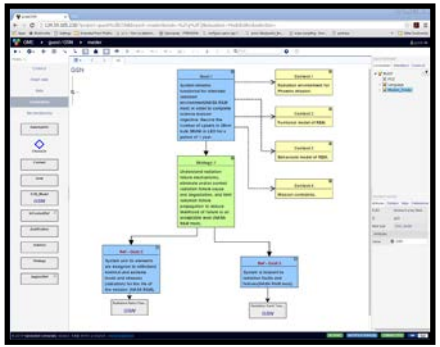

GSN

Integrated Radiation Suite

Vanderbilt Engineering

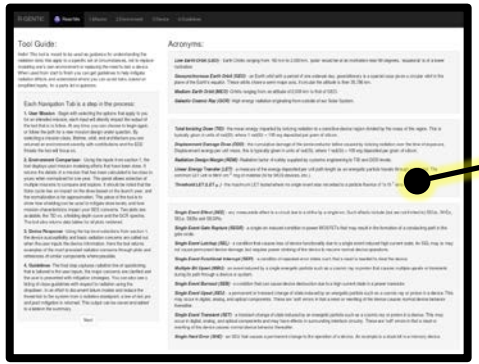

R-Gentic

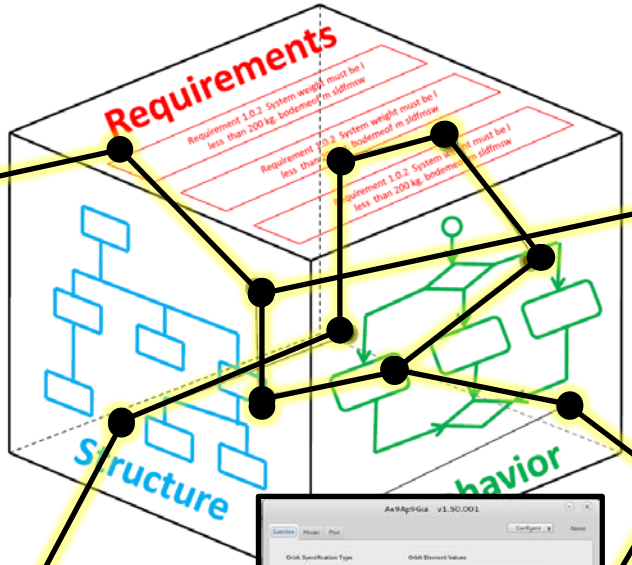

CREME

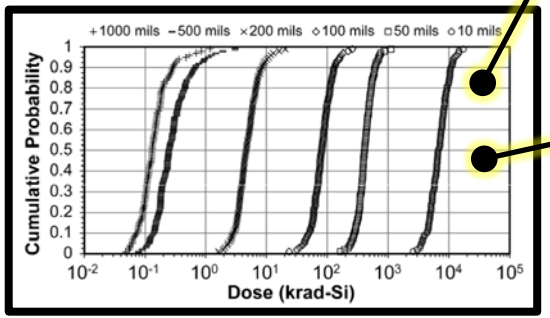

TID Conf. Modeling

AP9

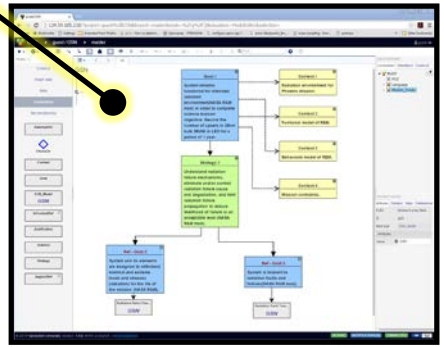

GSN

More Than Data Sharing: What Do Links Represent?

Vanderbilt Engineering

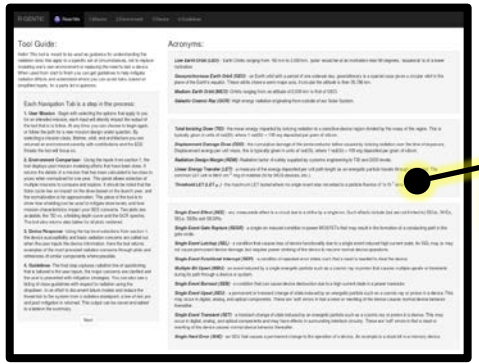

R-Gentic

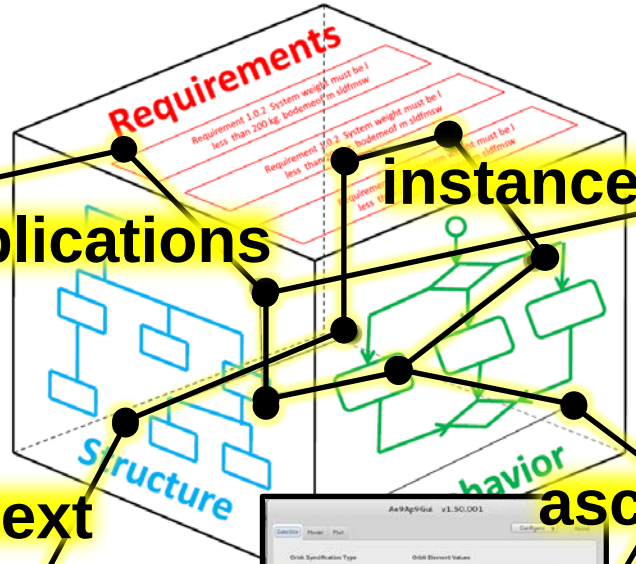

CREME

implications

instances

context

ascriptions

dependencies

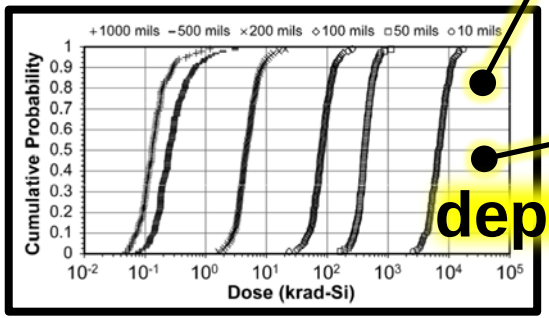

TID Conf. Modeling

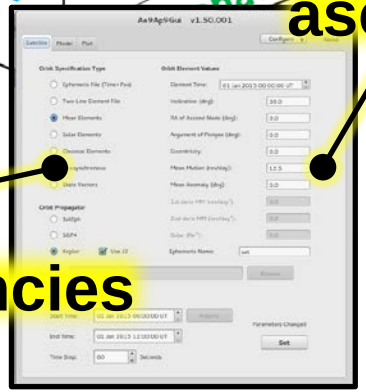

AP9

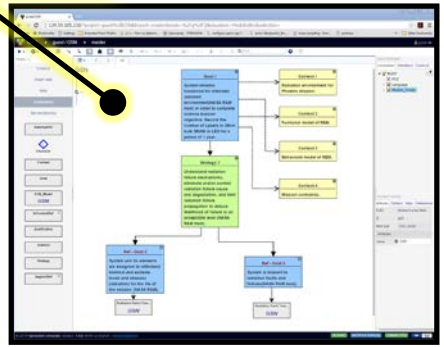

GSN

Radiation Hardness Assurance Tool Ecosystem

Vanderbilt Engineering

- **Tools provide evidence for assurance case**
- **Explicit links provide traceability**

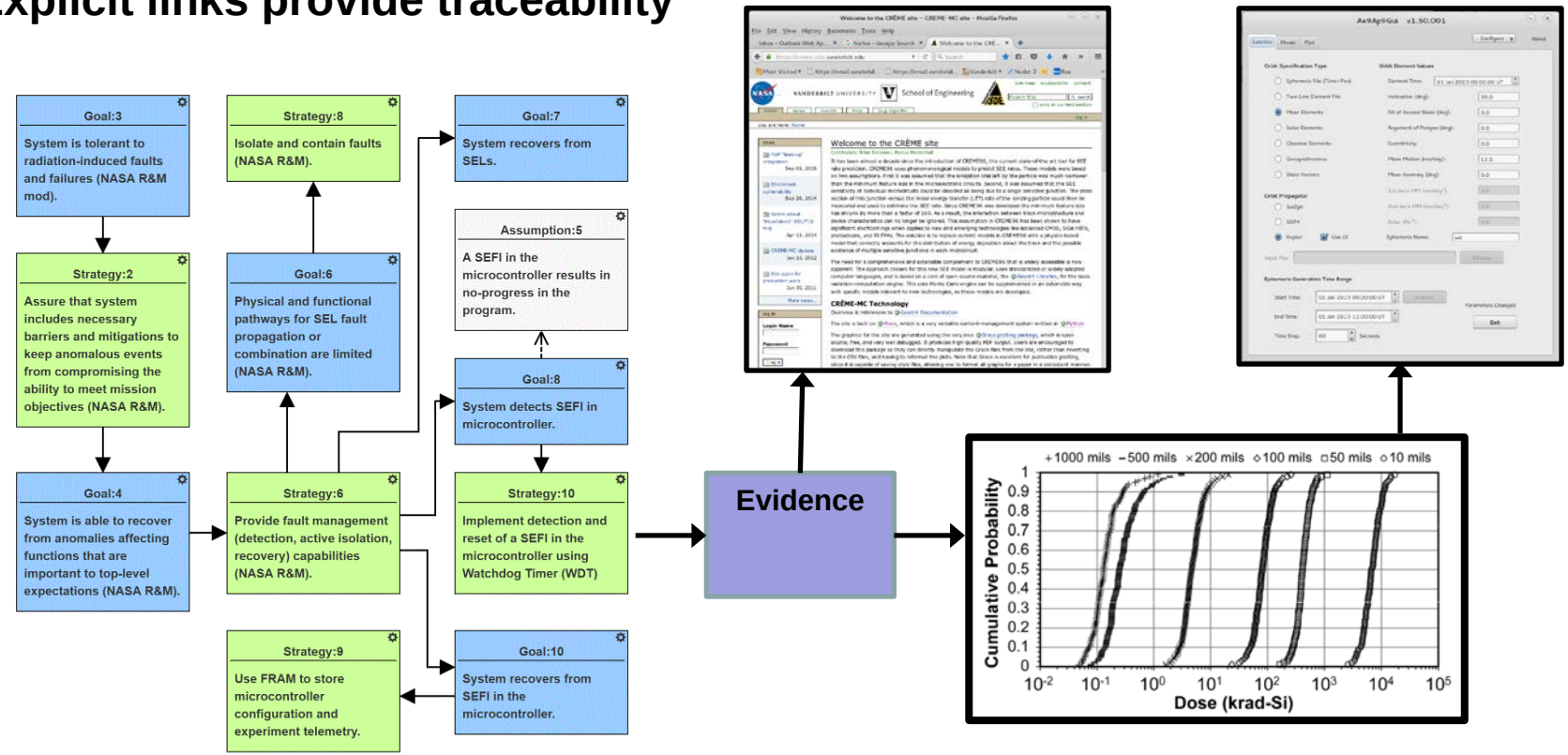

webGME: Web/Cloud-based Collaborative Modeling Infrastructure

Vanderbilt Engineering

- WebGME is a *platform* for building modeling tools and model-based toolbenches
- Open source, in active development, >10^3 users
- Web-based: all tools and project data reside on a web server, accessed via browser/client. Work with all known modern browsers
- Models and affiliated artifacts ('assets') are stored in a high-performance, add-only, database
- Full version control (linear and branching versioning, with support for merging)
- Multi-user, collaborative environment
- Implementation supports access to/invocation of other tools

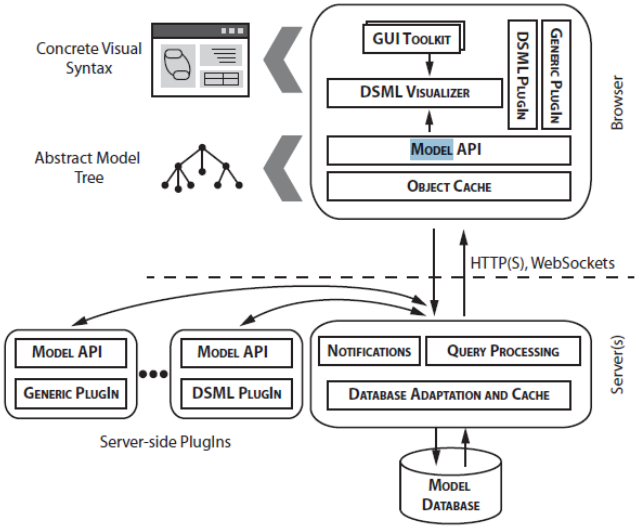

https://webgme.org/ - Platform

https://modelbasedassurance.org/

Vision for a Tool Integration Architecture

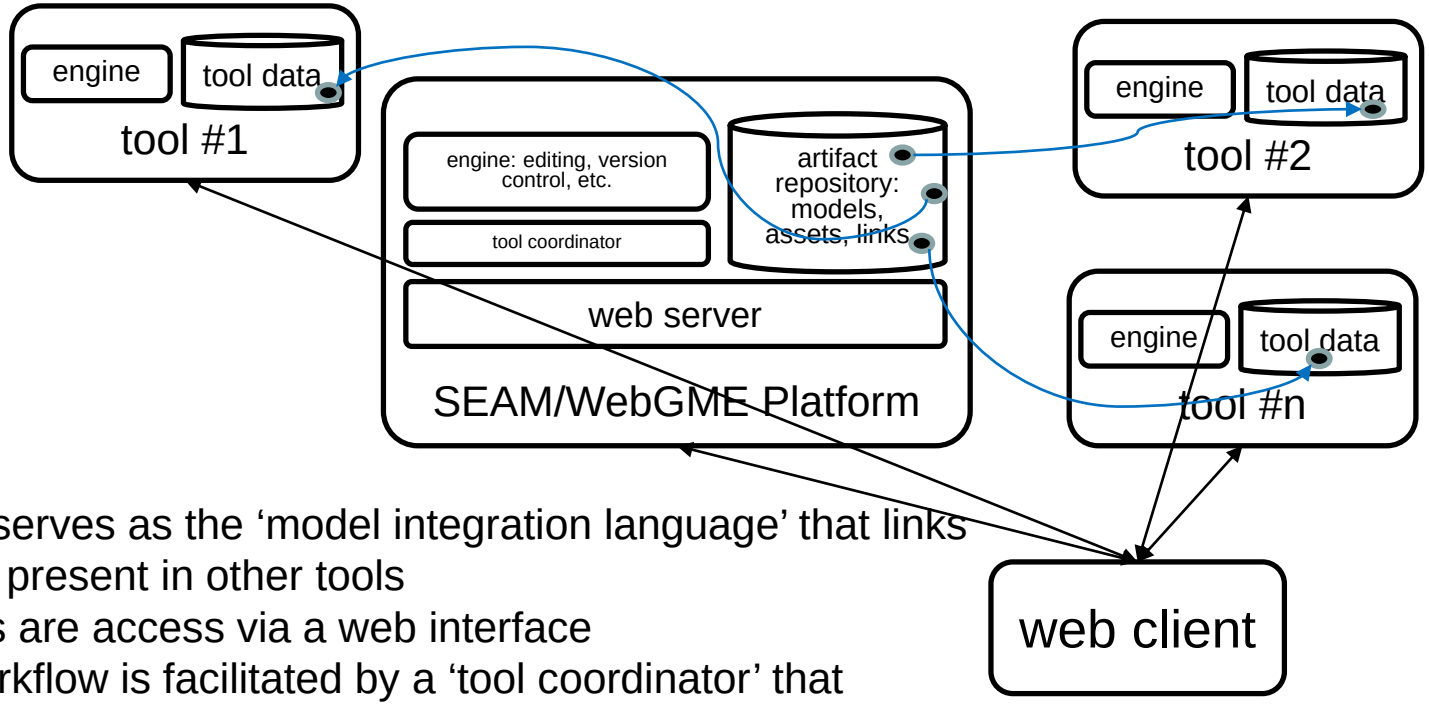

SEAM serves as the 'model integration language' that links models present in other tools
All tools are access via a web interface
The workflow is facilitated by a 'tool coordinator' that managers tool execution and artifact production/consumption
The t/c is also responsible for invoking translators as needed.
The artifact repository stores intermediate, final work products

Summary

- An integrated radiation suite can compliment Model-Based Mission Assurance by providing assurance case "evidence"
- Updates to CRÈME and deployment of new radiation tools will focus on interoperation and movement to a shared platform
- SEAM is developing into a platform that can support coverage analysis and requirements traceability
- SEAM plus a common database represents an opportunity to integrate outputs from physical modeling tools, either in radiation or other physical domains
- Expansion to other disciplines in mission assurance and inclusion of databases are welcome