National Aeronautics and Space Administration

NASA Electronic Parts and Packaging (NEPP) Program
2020 Electronics Technology Workshop (ETW)

Government Working Group Update

Prepared by: MSFC ES33/Kathy Laird

AGENDA

I. Acronyms

II. Purpose, Objective, & Scope

III. Accomplishments

IV. Current Topics

Acronyms

AFC	Army Futures Command
AFB	Air Force Base
Ag	Silver
Au	Gold
AvMC	Aviation and Missile Center
CCDC	Combat Capabilities Development Command
COTS	Commercial Off The Shelf
DLA	Defense Logistics Agency
DPA	Destructive Physical Analysis
ECSS	European Cooperation For Space Standardization
EEE	Electrical, Electronic, Electromechanical
ESA	European Space Agency
GSFC	Goddard Space Flight Center
GWG	Government Working Group
JEDEC	Joint Electronics Device Council
JPL	Jet Propulsion Laboratory
MDA	Missile Defense Agency
MELF	Metal Electrode Leadless Face
MIL-HDBK	Military Handbook
MIL-PRF	Military Performance Specification
MIL-STD	Military Standard
MSFC	Marshall Space Flight Center
NEPAG	NASA Electronic Parts Assurance Group
NEPP	NASA Electronics Parts and Packaging
NRO	National Reconnaissance Office
NSWC	Naval Surface Warfare Center
PEMs	Plastic Encapsulated Microcircuits
Pb	Lead
QCI	Quality Conformance Inspection
SAE	Society of Automotive Engineers
SMC	Space and Missile Center
Sn	Tin
TM	Test Method

Purpose, Objective, Scope, Meetings

GWG was established in January 2017

- **Purpose:** To discuss in detail government topics from NEPAG which require additional in-depth technical solutions and support other working group initiatives as requested
- **Objective:** To establish a one-government stance applicable to both terrestrial and space programs
- **Scope:** Attendees represent 8 government agencies
  - *Air Force – SMC/The Aerospace Corporation & Wright-Patterson AFB*
  - *Army – AFC CCDC AvMC*
  - *DLA*
  - *MDA*
  - *NASA Centers*
  - *Navy – NSWC Crane Division*
  - *NRO/The Aerospace Corporation*
- **Meetings:** Held 85 meetings to date

One Government Stance Responses

➢ Life Test Parts For End Use

- Supported a JEDEC request to determine if various commodity specification requirements support our disposition/reliability expectations regarding life test parts for flight use.

- We determined that discrete specification should be strengthened with prohibited language if requested by the purchase order along with criteria to readily identify said parts to ensure proper disposition and segregation from flight articles.

One Government Stance Responses

- **DO-213AA MELF Diode Clearance "S Dimension" Criteria**
  - Technically discussed and accepted a manufacturer's proposal to modify MELF UR-1 packaged glass diode S dimension criteria to "reference only" to reduce incoming inspection failures (n=18 MIL-PRF-19500 slash sheets)

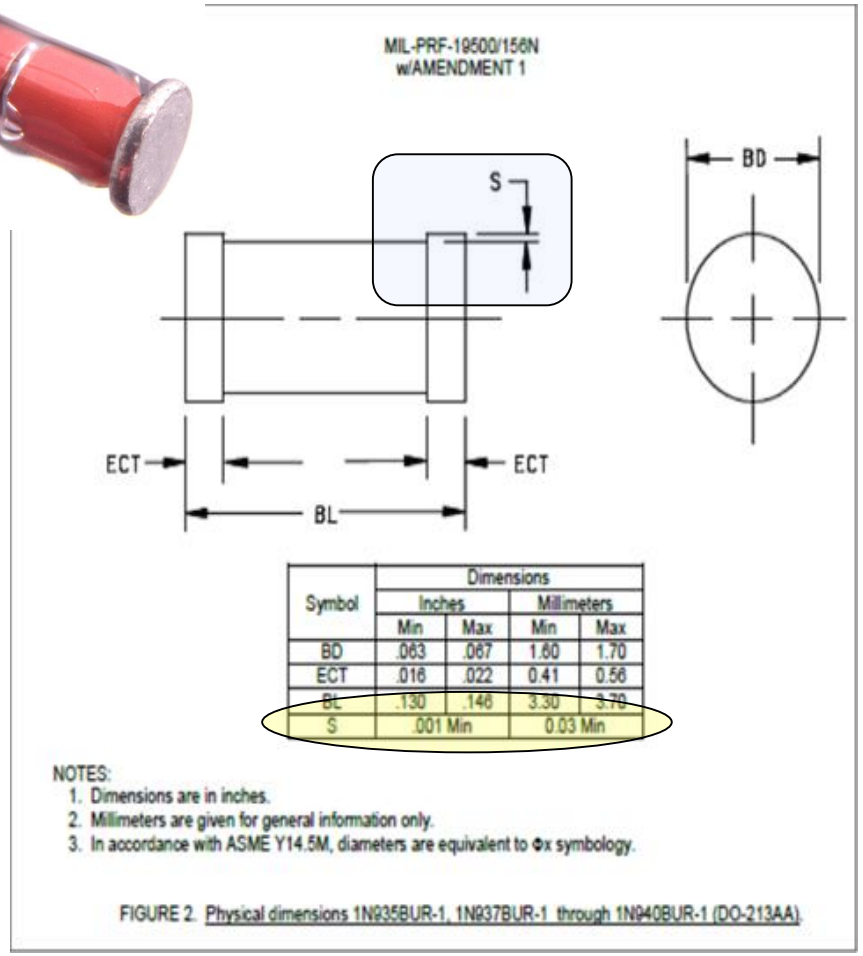

MIL-PRF-19500/156N
w/AMENDMENT 1

Symbol	Dimensions			
	Inches		Millimeters	
	Min	Max	Min	Max
BD	.063	.067	1.60	1.70
ECT	.016	.022	0.41	0.56
BL	.130	.146	3.30	3.70
S	.001 Min		0.03 Min	

NOTES:
1. Dimensions are in inches.
2. Millimeters are given for general information only.
3. In accordance with ASME Y14.5M, diameters are equivalent to Φx symbology.

FIGURE 2. Physical dimensions 1N935BUR-1, 1N937BUR-1 through 1N940BUR-1 (DO-213AA).

One Government Stance Responses

➢ PB-Free Sn Alloy High Temperature Solders

- Technically reviewed and provided from/to language to DLA regarding the incorporation of Pb-free solders into MIL-PRF-28750 Revision K "General Specification for Relays, Solid State."
- The change reflects the use of Pb-free Sn solder alloyed with Au and Ag for high temperature internal connections. A certain manufacturer was found to be non-compliant to the specification affecting 3 slash sheets. It was found that both AuSn and AgSn solders had been incorporated into their builds (15/5 years, respectively) without any issues.
- Discussions requesting slash sheet updates with specific alloy information were rejected by DLA to protect manufacturer's proprietary design information. GWG recommended that their use should be noted in the slash sheets for user/DPA lab awareness.

One Government Stance Responses

➢ Pb-Free Sn Alloy High Temperature Solders (cont.)

- Section 3.7 of Revision J contains the original requirement.

  "3.7 Pure tin. The use of pure tin, as an underplate or final finish, is prohibited both internally and externally. Tin content of relay components and solder shall not exceed 97 percent, by mass. Tin shall be alloyed with a minimum of 3 percent lead, by mass (see 6.5)."

Alternate Title:

"Sometimes — *Adverb*
Tin — *Noun*
Whiskers" — *Verb*

-- Quote attributed to Lyudmyla Panashchenko

Compiled by
Jay Brusse/Perot Systems
July 2009

SnPb Whiskers Formed on Sn63Pb37 Reflowed Die Attach
NASA Goddard Space Flight Center Code 562

http://nepp.nasa.gov/whisker/reference/tech_papers/Leidecker2003-SnPb-whiskers-on-laser-diode-array.pdf

One Government Stance Responses

➢ PB-Free Sn Alloy High Temperature Solders (cont.)

- Section 3.7 of Revision K reflected the original wording **plus** the allowance.

  "The use of lead-free tin alloy high temperature solders (e.g., Au80Sn20, Sn96Ag4, Sn96.5Ag3.5, etc.) for internal connections may be permitted based upon technical justification and requires approval from the qualifying activity, so long as the tin content of the relay components and solder does not exceed 97 percent, mass."

Alternate Title:

"Sometimes	*Tin*	*Whiskers"*
Adverb	*Noun*	*Verb*

-- Quote attributed to Lyudmyla Panashchenko

Compiled by
Jay Brusse/Perot Systems
July 2009

Au-Sn Whiskers
Anonymous

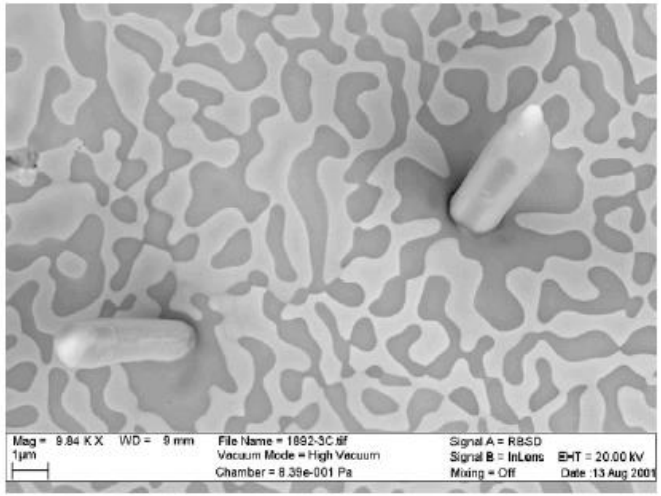

One Government Stance Responses

➢ Random Vibration Requirements for Crystal Oscillators

- Supported an effort by DLA to comply with an Aerospace Addendum 1 request to MIL-PRF-55310F. The request was to add a random vibration test requirement under "Table II, Screening (100 percent) for Class 2 Oscillators", product level S and keep the random vibration requirement in "Table IV, Qualification Inspection" Group III Subgroup 1 as well as impose a tighter vibration limit for QCI.
- The tighter limit creates a performance margin and due to the fact random vibration induces the mechanism for constant acceleration failures it aids in the identification and removal of nonconforming product.

Document Draft Reviews

- **GWG supported the technical review of 19 draft documents and representatives compiled comments. Comments are submitted to DLA, SAE or respective organization for consideration in the next revision or release.**
  - MIL-PRF-14409 Disposition Review "Capacitors, Variable (Piston type, Tubular Trimmer), General Specification for"
  - MIL-PRF-28750 Rev K Draft "Relays, Solid State, General Specification for"
  - MIL-PRF-38534 Rev L Draft "Hybrid Microcircuits, General Specification for"
  - MIL-PRF-55310 Rev F A1 Draft "Oscillator, Crystal Controlled, General Specification for"
  - MIL-STD-202-208A, 214
  - MIL-STD-750-2A TM2026, TM2039; MIL-STD-750-3A TM3402; MIL-STD-750-4A TM4016
  - MIL-STD-883 TM1018, TM1015, TM2012
  - MIL-HDBK-xx713 New Document Review NSWC-Crane Solder Electronic Products Handbook
  - MDA COTS Assembly Hardware Selection Checklist
  - ESA COTS Initiative Working Group
  - SAE SSB1-004B Draft "Failure Rate Estimating"
  - SAE SSB1-005 New Document Radiation Hardness Draft Review

Work In Process

- ✓ Burn-In 96 hour Test Window Discussion
- ✓ Continuous Improvement of MIL-STD-750-2 TM2012 Radiography Requirements
- ✓ Standardization of Foreign Material Definition Within 750/883 Test Methods
- ✓ MIL-PRF-19500 Bond Pad Size Mounting Requirements
- ✓ MDA COTS Assembly Hardware Selection Checklist Peer Review
- ✓ PEMs Space Qualification Standardization Leveraging off of SAE AS6294/1 Flow
- ✓ ECSS-Q-ST-30-11C Rev.2 Draft "Space Product Assurance Derating – EEE Components" Document Review

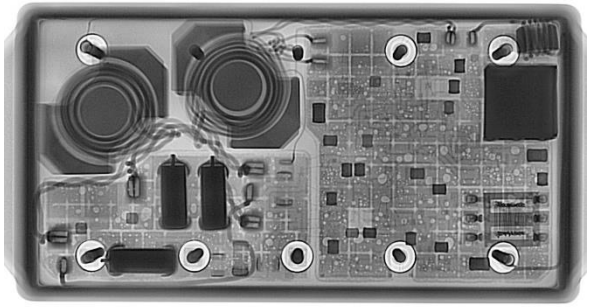

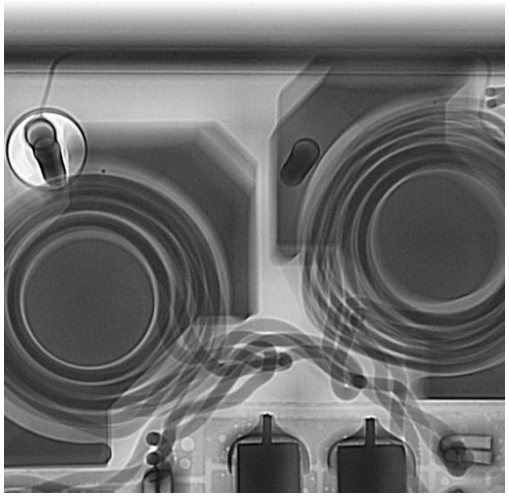

Photos Provided by JPL

Questions?

GWG Co-Chair Contact Information:

- Christian.Schuler@navy.mil
- Kathy.R.Laird@nasa.gov