R-Gentic-SEAM Interface and Harmonization

Kaitlyn L. Ryder

NASA Goddard Space Flight Center, and
Vanderbilt University

6/18/2020

This work is sponsored by NEPP Grant and
Cooperative Agreement Number 80NSSC20K0424

Acronyms

Vanderbilt Engineering

DDD	Displacement Damage Dose
GCR	Galactic Cosmic Rays
GSFC	Goddard Space Flight Center
GSN	Global Structuring Notation
NEPP	NASA Electronic Parts and Packaging
SEAM	Systems Engineering and Assurance Modeling
SEE	Single Event Effects
SEB	Single Event Burnout
SEGR	Single Event Gate Rupture
SEL	Single Event Latch-up
SysML	System Modeling Language
TID	Total Ionizing Dose

Overview

Vanderbilt Engineering

- Motivation: Why Interface R-Gentic and SEAM?
- Review of R-Gentic Website
- Review of the SEAM Tool/SysML+Fault Models
- Using R-Gentic to Streamline SEAM Project Creation
- Update on Synchronizing Typical Radiation Effects Between R-Gentic/SEAM
- Future Steps

Motivation for Interfacing R-Gentic and SEAM

Vanderbilt Engineering

- Current project creation in SEAM requires either starting from a blank project or creating a duplicate of an existing project
- Starting from a blank project is time consuming and can be overwhelming for new users
- Starting from an existing project results in having to make many unnecessary modification, and relies on users having multiple projects to choose from
- R-Gentic's output may be useful in creating a seed for new projects that only contains EEE parts of interest
  - Reduce the complexity and time-consumption of making new projects

REVIEW OF R-GENTIC WEBSITE

R-Gentic

Vanderbilt Engineering

- https://vanguard.isde.vanderbilt.edu/RGentic/
- Developed largely by Michael Campola at NASA GSFC
- Allows users to input general information about their mission and EEE parts, and provides basic guidance on typical radiation risks that may apply
- Does not replace need for environment modeling, radiation effects testing, or the expertise of a radiation effects engineer
- R-Gentic Process:
  1. User Mission – input orbit, mission lifetime, risk tolerance
  2. Environment Comparison – radiation environments from known missions with similar orbits
  3. Device Response – input device types of interest, basic radiation concerns are given
  4. Guidelines – major concerns are clarified, radiation specific class guidelines are given

1. User Mission

Vanderbilt Engineering

R-GENTIC | Acronyms | 1. Mission | 2. Environment | 3. Device | 4. Guidelines

Notional Radiation Risks

Mission Description:

Orbit:

LEO (Polar)

Type in Altitude(km):

410

Sun Cycle

Solar Max

Class:

A

Lifetime:

- ○ Short (< 1 Year)
- ◉ Medium (1-3 Years)
- ○ Long (> 3 Years)

Architecture:

- ○ Single spacecraft, no redundancy
- ◉ Single spacecraft, with redundancy
- ○ Swarm

Overview:

Environment Severity: *High*

Threat	Presence
Trapped Electrons	Moderate
Trapped Protons	Yes
Solar Protons	Yes
Galactic Cosmic Rays	Yes

EEE Focus on:

Degradation & Single Event

2. Environment Comparison

Vanderbilt Engineering

R-GENTIC | Acronyms | 1. Mission | 2. Environment | 3. Device | 4. Guidelines

What does a Similar Environment Look Like?

Inspect & Compare:

Your Orbit Input: LEO (Polar) 410 km

Similar to: LEO Polar

Click in the Box to Compare other Environments:

- LEO Polar (500km, 94deg, 3yrs, 2017)
- LEO Polar (650km, 98deg, 1yr, 2016)
- LEO Polar (650km, 98deg, 4yrs, 2014)
- LEO Polar (705km, 98deg, 5.25yrs, 2011)
- LEO Polar (824km, 98.7deg, 7yrs, 2017)
- LEO Polar (828km, 98.7deg, 5yrs, 2013)
- LEO Polar (900km, 98deg, 3yrs, 2011)

Plot Options:

- [x] Normalize to 1 Year
- [ ] Show all contributions
- [x] Show in mils
- [ ] Facet Plot
- [ ] Logarithmic Depth
- [ ] Hide Legend

Dose Depth Curve for TID | GCR Spectra Plot for SEE | Dose Depth Table | Spectra Table

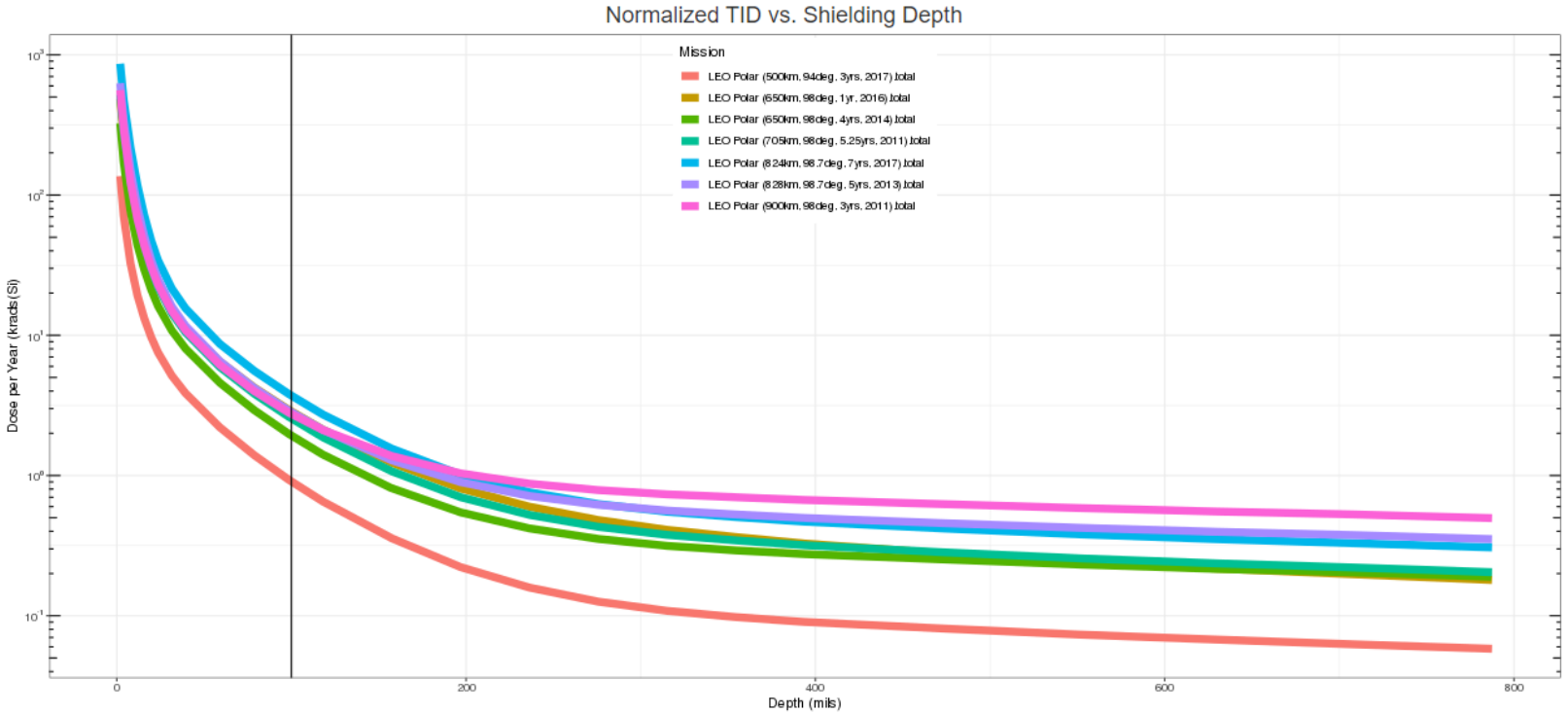

Results can be found using tools like SPENVIS CREME OMERE , TID # for a program is usually quoted behind 100mils Al

2. Environment Comparison

Vanderbilt Engineering

R-GENTIC | Acronyms | 1. Mission | 2. Environment | 3. Device | 4. Guidelines

What does a Similar Environment Look Like?

Inspect & Compare:

Your Orbit Input:	Similar to:
LEO (Polar) 410 km	LEO Polar

Click in the Box to Compare other Environments:

- LEO Polar (500km, 94deg, 3yrs, 2017)
- LEO Polar (650km, 98deg, 1yr, 2016)
- LEO Polar (650km, 98deg, 4yrs, 2014)
- LEO Polar (705km, 98deg, 5.25yrs, 2011)
- LEO Polar (824km, 98.7deg, 7yrs, 2017)
- LEO Polar (828km, 98.7deg, 5yrs, 2013)
- LEO Polar (900km, 98deg, 3yrs, 2011)

Dose Depth Curve for TID | GCR Spectra Plot for SEE | Dose Depth Table | Spectra Table

GCR vs. LET

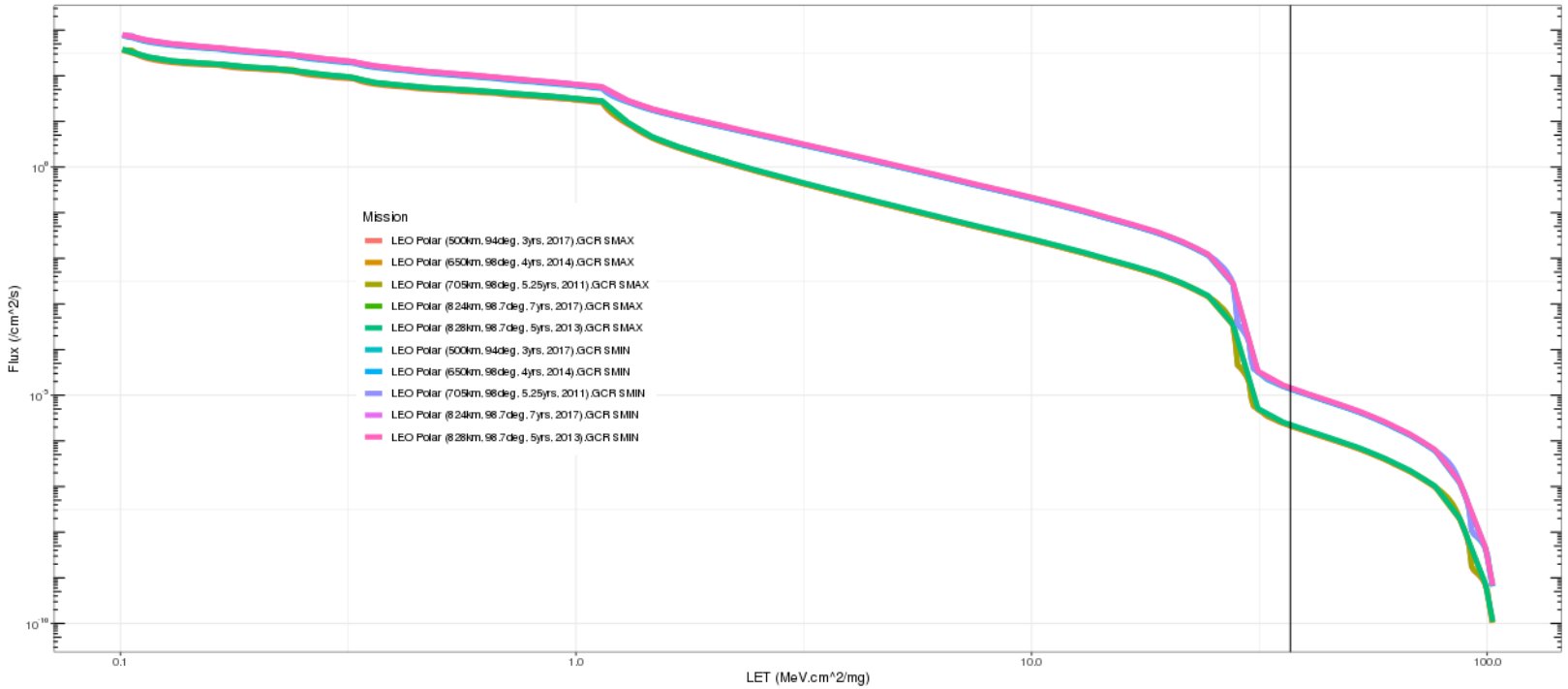

Results can be found using tools like SPENVIS CREME OMERE , TID # for a program is usually quoted behind 100mils Al

3. Device Response

Vanderbilt Engineering

R-GENTIC | Acronyms | 1. Mission | 2. Environment | 3. Device | 4. Guidelines

How do Similar Devices React?

Device:

Assign a Reference Designator or Unique ID

DUT1

Family: Opto-electronics

Function: LED

Enter Device Process if Known (for documentation)

N/A

Criticality:

- ○ Low (Device degradation/loss of functionality acceptable)
- ◉ Medium (Some degradation or upsets acceptable, but no loss of device)
- ○ High (Device must perform within specifications for successful mission)

Data:

NASA Radiation Report Resource Links (first place to look for your part number):

NASA GSFC Radiation Effects and Analysis Group

PMPedia

For Your Device Inputs of:

Opto-electronics LED

Mission specific Radiation Concerns by Family are:

TID, DDD, SEB, SEGR

Typical responses:

Tend to be significantly impacted by DDD, which takes form in CTR degradation and/or power output for LEDs. Can exhibit transients as well depending on application.

4. Guidelines

Vanderbilt Engineering

R-GENTIC | Acronyms | 1. Mission | 2. Environment | 3. Device | 4. Guidelines

What should you do to bring down the risk?

The typical line of radiation questioning for: Opto-electronics N/A LED with regard to TID, DDD, SEB, SEGR

No concern for SEB. No concern for TID. No concern for SEGR. Can the design deal with reduced optical output?

Criticality vs. Environment:

Level 1 or 2, rad hard suggested. Full upscreening for COTS. Fault tolerant designs for COTS.

NASA Class A Guidelines:

Components shall be radiation-hardened with guarantees for TID, DDD, and SEE performance designed to meet mission requirements for the specified orbit/trajectory. All required radiation testing (TID, DDD, and/or SEE) shall be on the flight lot and conducted at the part level. Fault-tolerant designs required for COTS parts. Impacts constrained to cost and schedule.

Considered for Medium criticality component on a Single spacecraft, with redundancy ...

Your Part	Radiation concerns	Greatest System Rad Concern	As-is Risk	Post Rec Risk
DUT1	TID, DDD, SEB, SEGR	Degradation & Single Event	Medium	Medium

Recommendation and Guidelines:

Most LEDs have slow on/off times making Single events negligible on the power output of the device.

Please send questions and feedback to: michael.j.campola@nasa.gov
Additionally a Model Based Mission Assurance Tool Can extend this analysis - SEAM

Save to Summary Sheet | Add my next part | Download Summary Sheet

Your tailored table summary of saved runs has 1 Rows:

Orbit	Altitude	Sun Cycle	Class	Mission Life	Mission Architecture	Environment Severity	RefDes	Device Family	Process	Function	Device Criticality
LEO (Polar)	410	Solar Max	A	Medium	Single spacecraft, with redundancy	High	DUT1	Opto-electronics	N/A	LED	Medium

4. Guidelines

Vanderbilt Engineering

R-GENTIC | Acronyms | 1. Mission | 2. Environment | 3. Device | 4. Guidelines

What should you do to bring down the risk?

The typical line of radiation questioning for: Clock/Timing CMOS PLL with regard to TID, SEU, MBU, SEFI, SEL

Device may exhibit Latch-up. Is there redundancy? Will you be able to power cycle? Yes. Can you live with shifts in operating conditions (primarily in voltage countrolled oscillator - Frequency Range)? Is possible depending on configuration/topology. (Stuck in wrong state) Concern for all-digitial PLLs.

Criticality vs. Environment:

Level 1 or 2, rad hard recommended. Full upscreening for COTS. Fault tolerant designs for COTS.

NASA Class A Guidelines:

Components shall be radiation-hardened with guarantees for TID, DDD, and SEE performance designed to meet mission requirements for the specified orbit/trajectory. All required radiation testing (TID, DDD, and/or SEE) shall be on the flight lot and conducted at the part level. Fault-tolerant designs required for COTS parts. Impacts constrained to cost and schedule.

Considered for High criticality component on a Single spacecraft, with redundancy ...

Your Part	Radiation concerns	Greatest System Rad Concern	As-is Risk	Post Rec Risk
DUT3	TID, SEU, MBU, SEFI, SEL	Degradation & Single Event	High	High

Recommendation and Guidelines:

Testing for flight application highly recommended

Please send questions and feedback to: michael.j.campola@nasa.gov
Additionally a Model Based Mission Assurance Tool Can extend this analysis - SEAM

Save to Summary Sheet | Add my next part | Download Summary Sheet

Your tailored table summary of saved runs has 3 Rows:

Orbit	Altitude	Sun Cycle	Class	Mission Life	Mission Architecture	Environment Severity	RefDes	Device Family	Process	Function	Device Criticality
LEO (Polar)	410	Solar Max	A	Medium	Single spacecraft, with redundancy	High	DUT1	Opto-electronics	N/A	LED	Medium
LEO (Polar)	410	Solar Max	A	Medium	Single spacecraft, with redundancy	High	DUT2	Discrete Power	CMOS	HEMT	High
LEO (Polar)	410	Solar Max	A	Medium	Single spacecraft, with redundancy	High	DUT3	Clock/Timing	CMOS	PLL	High

REVIEW OF SEAM TOOL/SYSML+FAULT MODELS

SEAM Capabilities

Vanderbilt Engineering

- https://modelbasedassurance.org/

- "SEAM (Systems Engineering and Assurance Modeling) is a web-based collaborative modeling platform for modeling assurance case integrated with the models of the system"

- Platform for logical modeling of systems
  - *Not* a physical model, SPICE model, etc.

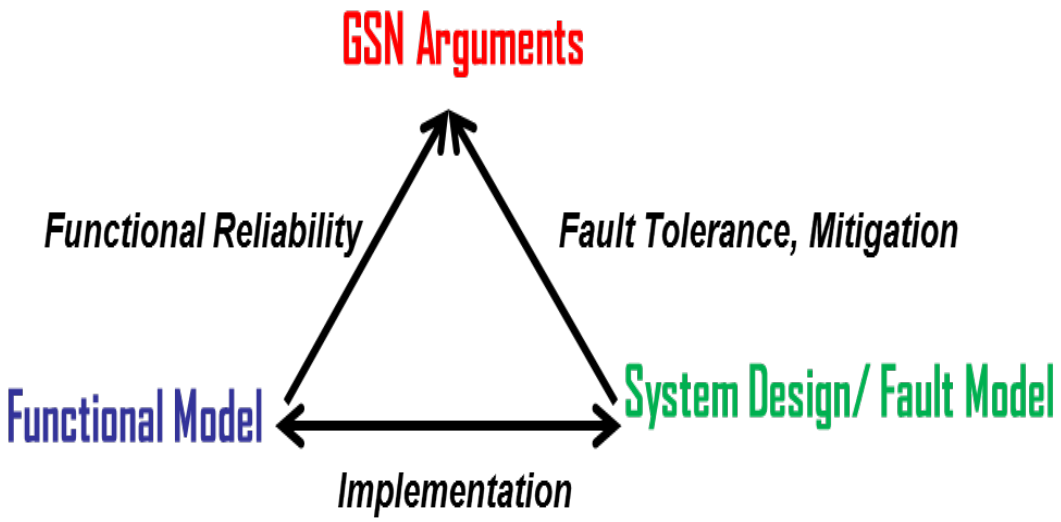

- Available Models:
  - Global Structuring Notation (GSN) models
  - Functional decomposition models
  - **System block diagram models (SysML)/Architectural models**
    - **Fault Models**

Example SysML – Architectural Model

Vanderbilt Engineering

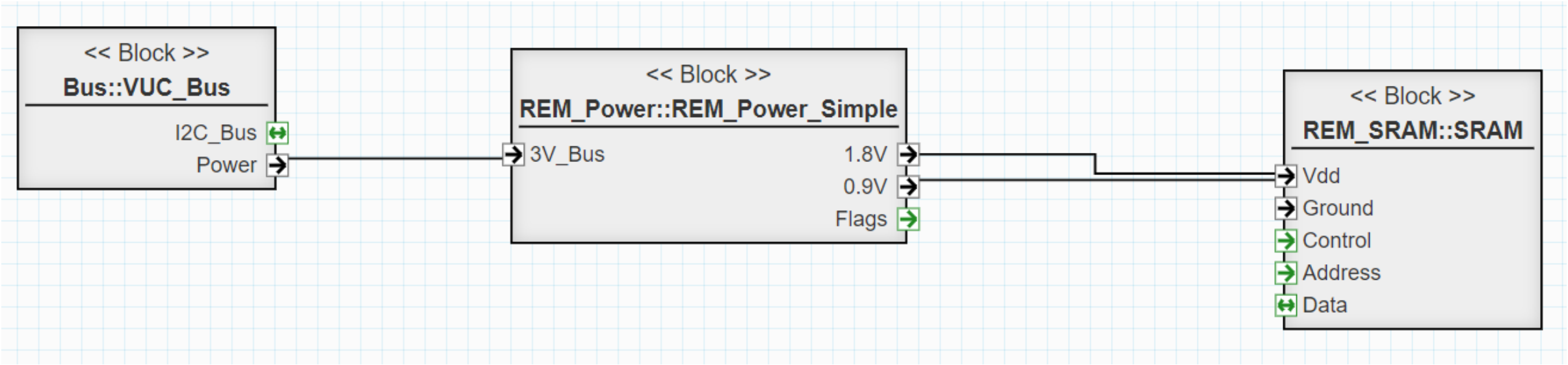

- Block diagram of basic system (from SEAM Tutorial project)
- Shows general flow of power and data through the system
- Each block can contain more levels of abstraction

Example SysML – Levels of Abstraction

Vanderbilt Engineering

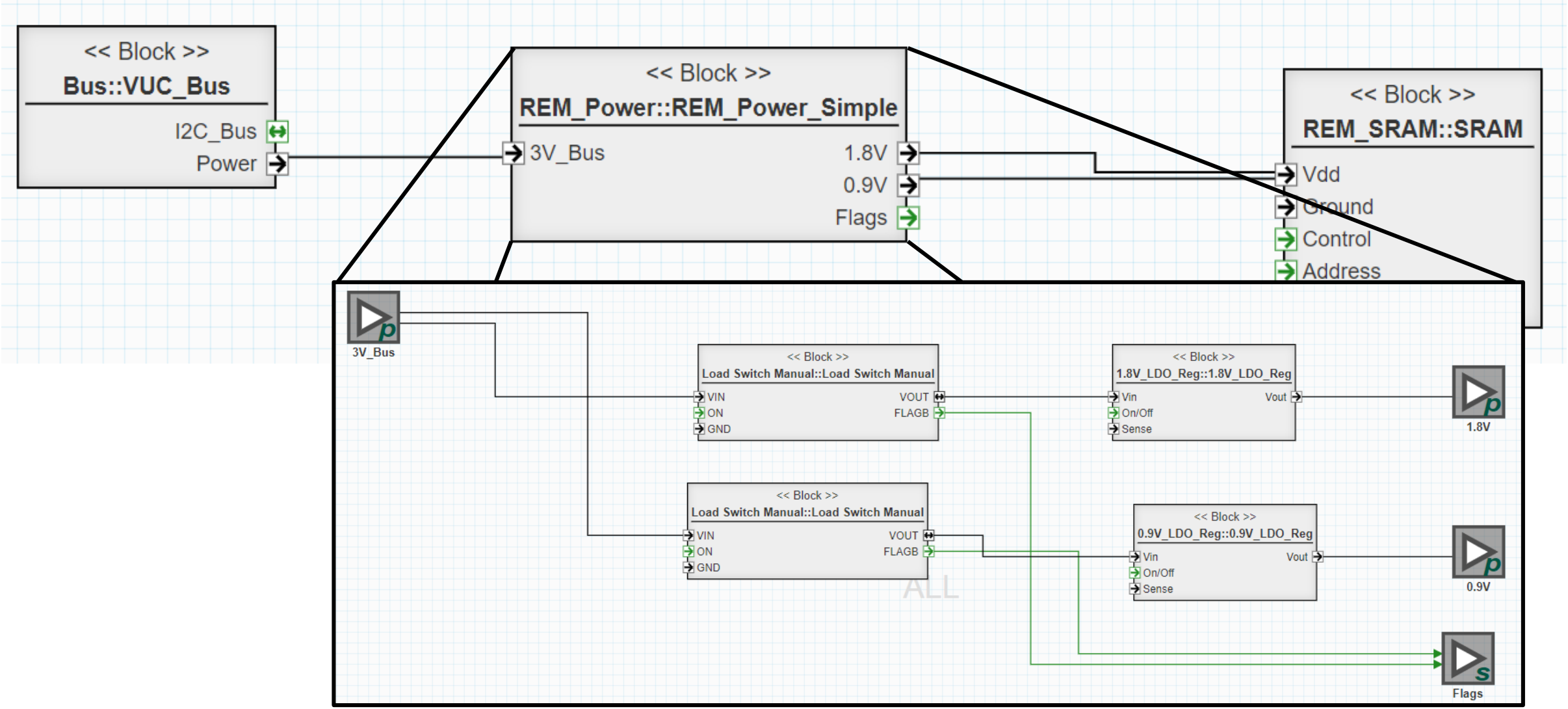

Part Library Templates

Vanderbilt Engineering

- SEAM allows for building project-specific libraries
- Include commonly used part types, failure labels, etc.
- Reduces modeling time

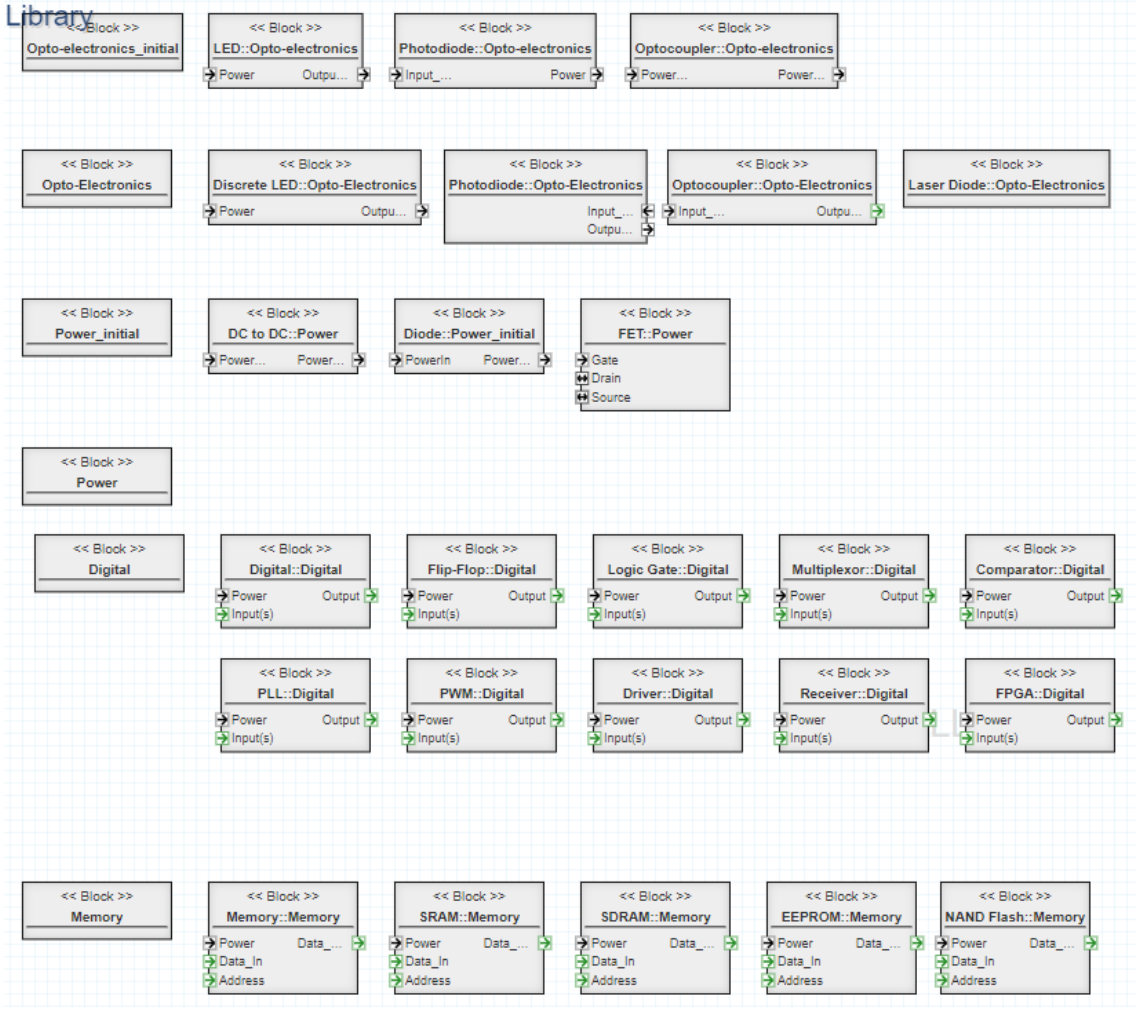

USING R-GENTIC TO STREAMLINE SEAM PROJECT CREATION

R-Gentic to SEAM Flowchart

Vanderbilt Engineering

User Information

- Part List
  - Detailed
  - Part numbers, manufacturer numbers
- System information:
  - Bias conditions
  - Mitigation techniques

R-Gentic Parts List

- **Part List:**
  - Simplified
  - Generic part types
  - **NO** part numbers

SEAM Fault Model Templates

- **Simplified part type models**
- Contain generalized radiation-induced faults for typical part types

SEAM SysML Model

- User can interconnect part type models according to their design and complete system architectural models in SEAM

Example R-Gentic-to-Project Library

Vanderbilt Engineering

R-Gentic Parts List			
Part	LED	HEMT	PLL
Criticality	Medium	High	High
Radiation concerns	DDD	SEB	SEL
		TID	SET
			TID
			SEFI
			SEU
			MBU

SEAM Project Library

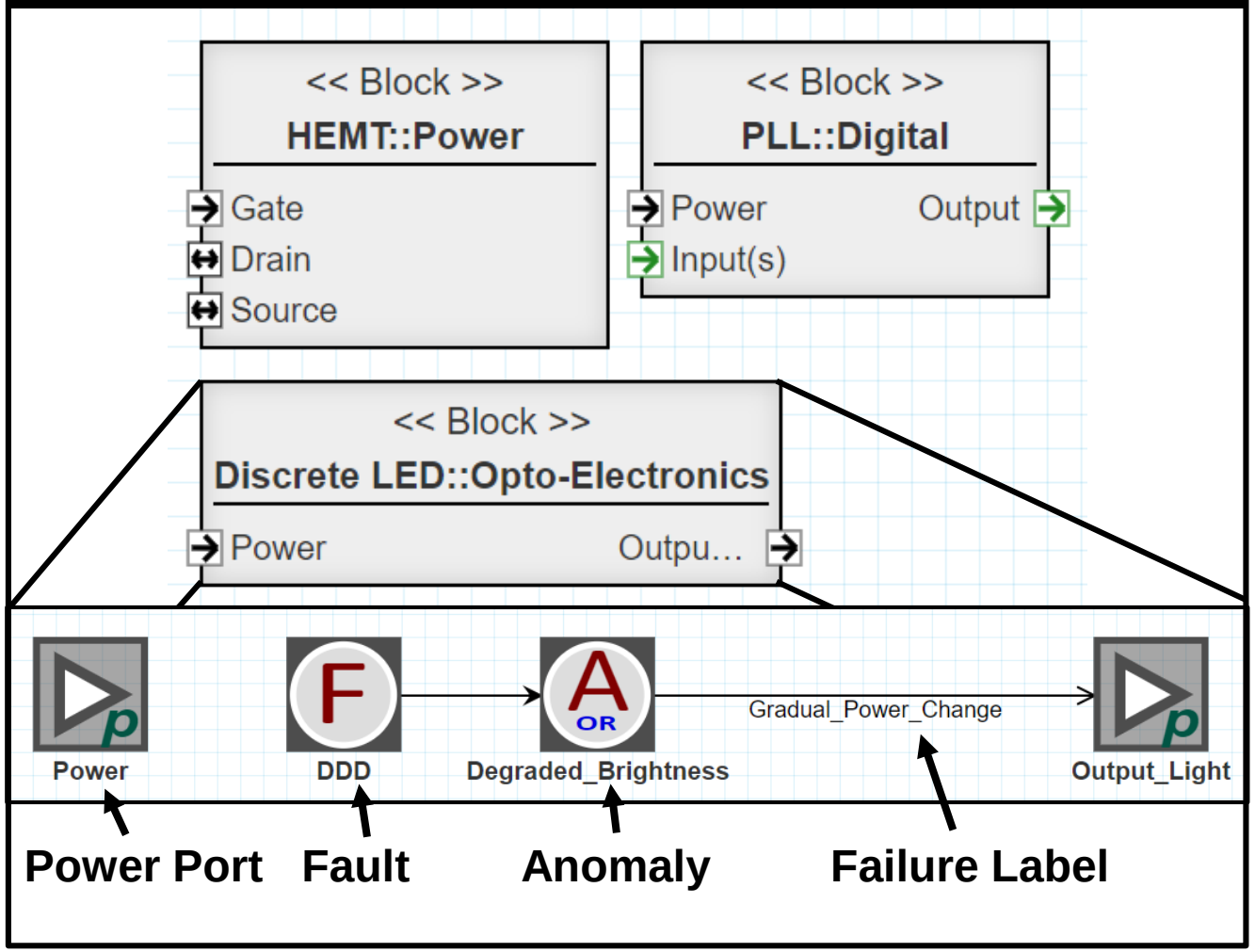

Establishing Relationships between Tools

Vanderbilt Engineering

R-Gentic	SEAM
• Look-up table of parts and effects	• Global part library
• Generic parts list	• Project-specific part library
• Information is descriptive, provides guidance	• Information is Boolean, yes/no does an effect occur
• No connection between components	• Shows connections between components

Update on Synchronizing Typical Radiation Effects Between R-Gentic and SEAM

R-Gentic Look-Up Table

Vanderbilt Engineering

- Families Present (66 total part types):
  - Clocks/Timing (4 part types)
  - Digital (5 part types)
  - Discrete (4 part types)
  - Discrete Power (7 part types)
  - Discrete RF (8 part types)
  - Embedded (4 part types)
  - Interfaces (6 part types)
  - Linear (5 part types)
  - Logic (2 part types)
  - Memory (4 part types)
  - Mixed Signal (5 part types)
  - Opto-Electronics (4 part types)
  - Power Hybrid (4 part types)
  - Sensors (4 part types)
- Radiation Concerns Present:
  - Single Event Latch-up
  - Single Event Burnout
  - Single Event Transients
  - Single Event Function Interrupt
  - Single Event Gate-Rupture
  - Single Event Upset
  - Multiple Bit Upset
  - Total Ionizing Dose
  - Displacement Damage Dose

SEAM Global Part Library

Vanderbilt Engineering

Discrete LED

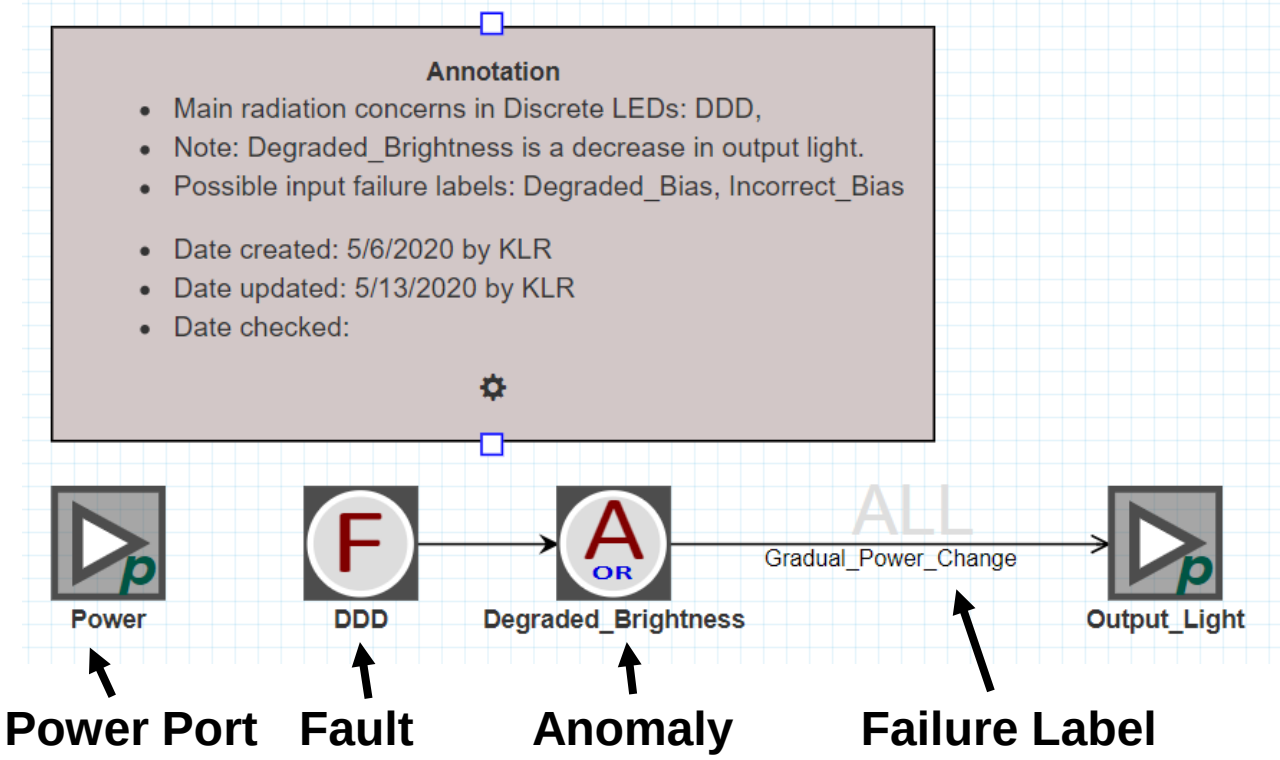

Photodiode

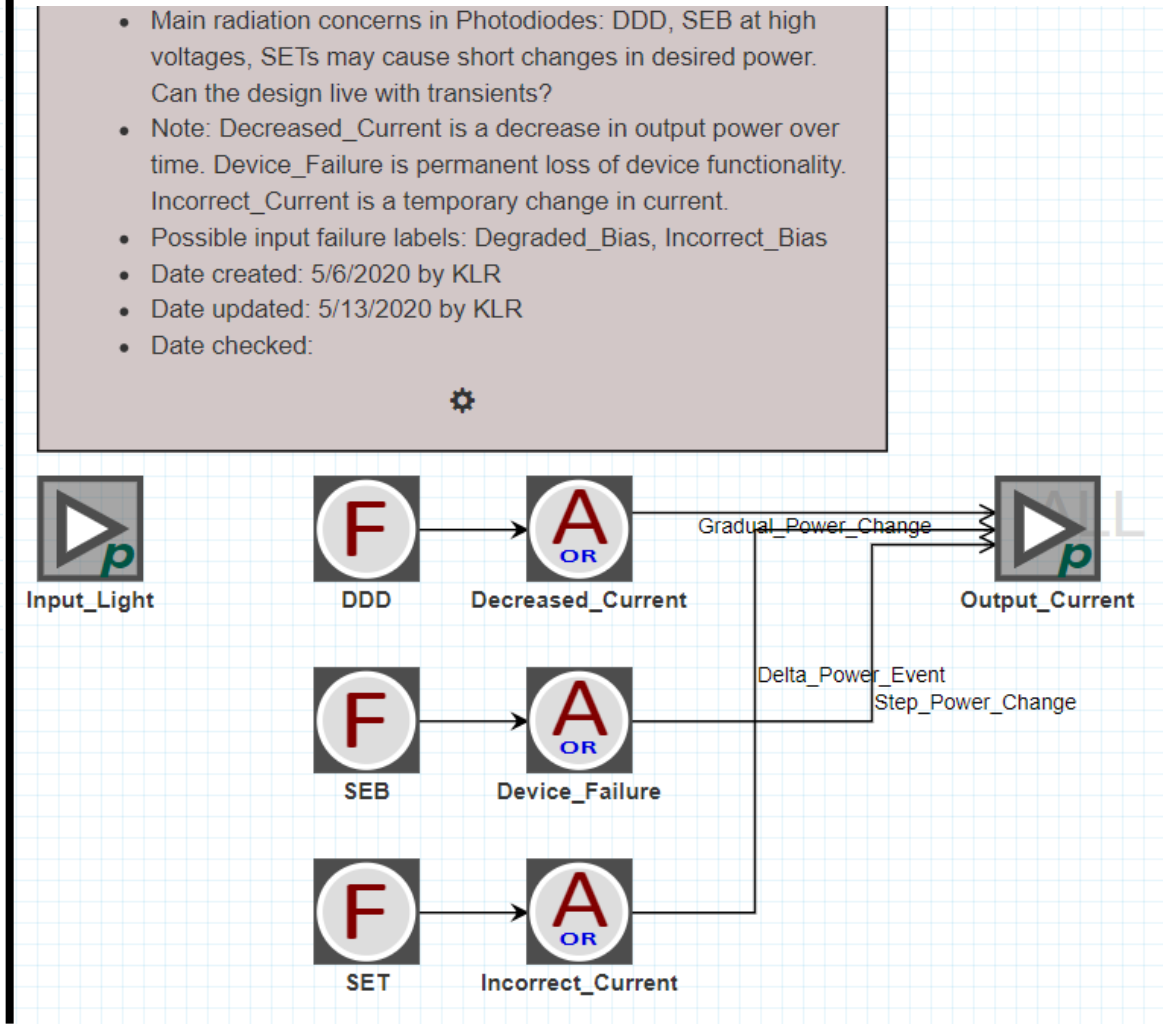

FUTURE WORK

Future Work to Complete R-Gentic-Seam Integration

- Finish modifying R-Gentic look-up table
- Finish creating part templates in SEAM global library
- Create a new R-Gentic exportable csv that can be read into SEAM
- Modify SEAM to allow for uploading of exportable csv from R-Gentic
- Once interfacing between R-Gentic and SEAM is complete, the process for creating projects from scratch will be streamlined. Creating architectural models (SysML) and fault models of systems will be easier.